OMT 10.0

UNIVERSAL OMNIMOUNT 10.0 MOUNT

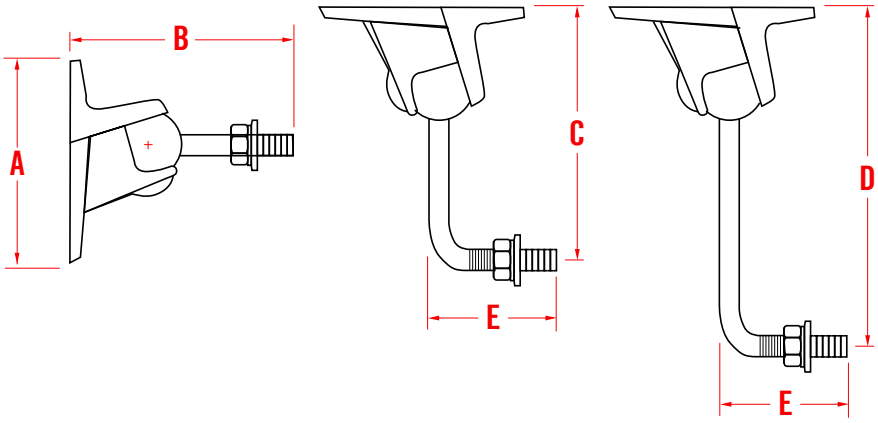

TECHNICAL SPECIFICATIONS

A	2.813”	71.44mm
B	3.00“	76.20mm
C	5.25”	133.35mm
D	8.125”	206.38mm
E	1.375”	34.93mm

A multi configuration mounting solution made of stainless steel and aluminum

- Maximum flexibilty: 360° base rotation 180° pan, +/-30° tilt
- Three arm extensions: 3”, 5”, 8” (76mm, 127mm, 203mm)
- Includes a T-bar clip for drop ceiling
- Includes complete mounting hardware kit
- Available in Black and White
- 10 lb. (4.5 kg) max weight capacity