RK-10

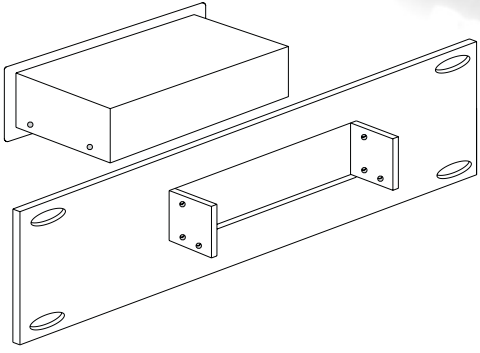

For products:
VM-10AN,
VS-6EII.