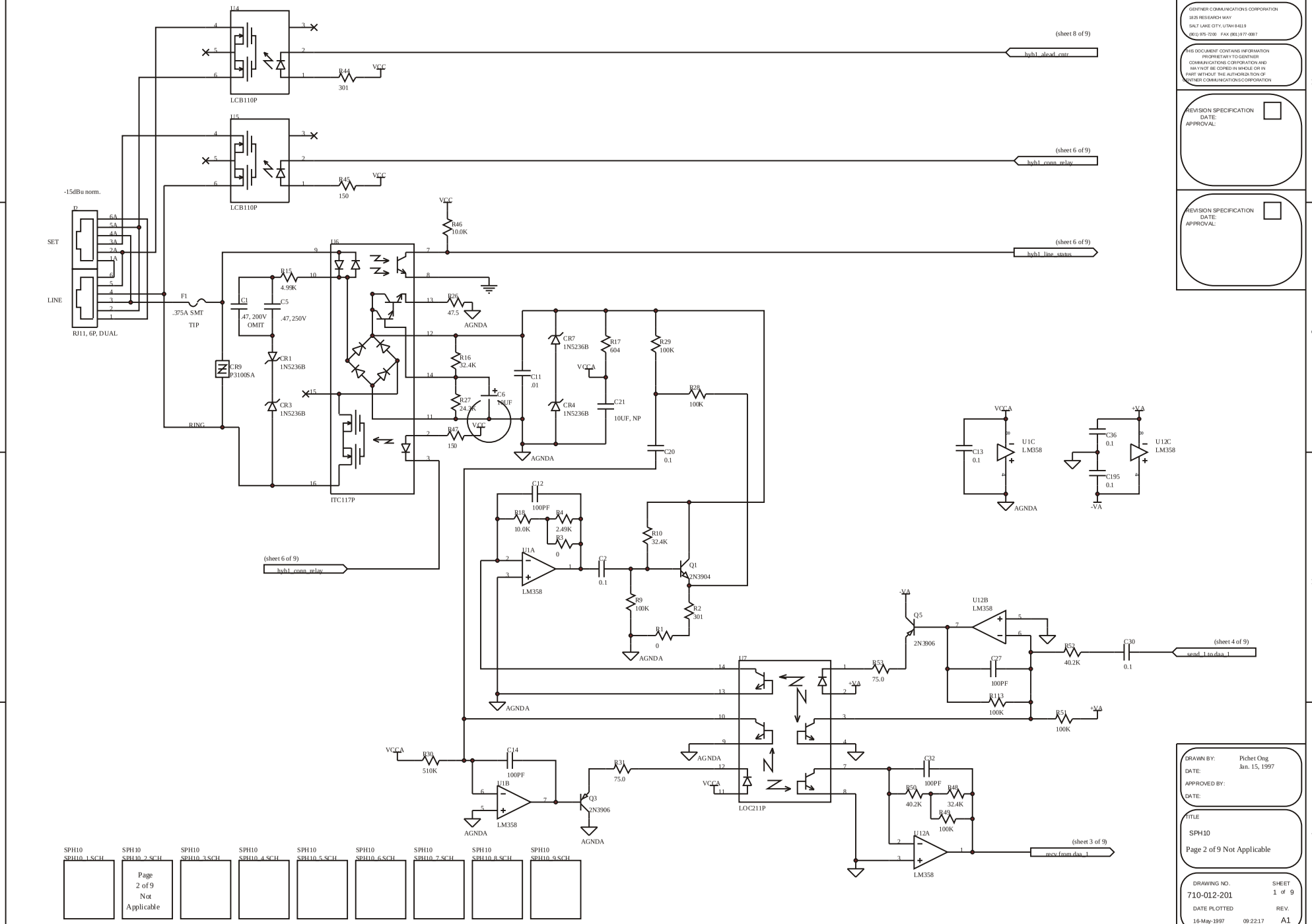

Gentner

GENTNER COMMUNICATIONS CORPORATION
1825 RESEARCH WAY
SALT LAKE CITY, UTAH 84119
(801) 975-7200 FAX (801) 977-0087

THIS DOCUMENT CONTAINS INFORMATION PROPRIETARY TO GENTNER COMMUNICATIONS CORPORATION AND MAY NOT BE COPIED IN WHOLE OR IN PART WITHOUT THE AUTHORIZATION OF GENTNER COMMUNICATIONS CORPORATION

REVISION SPECIFICATION
DATE:
APPROVAL:

REVISION SPECIFICATION
DATE:
APPROVAL:

DRAWN BY: Pichet Ong
DATE: Jan. 15, 1997
APPROVED BY:
DATE:

TITLE
SPH10
Page 2 of 9 Not Applicable

DRAWING NO. 710-012-201
SHEET 1 of 9
DATE PLOTTED 16-May-1997 09:22:17
REV. A1