TEMPLATE

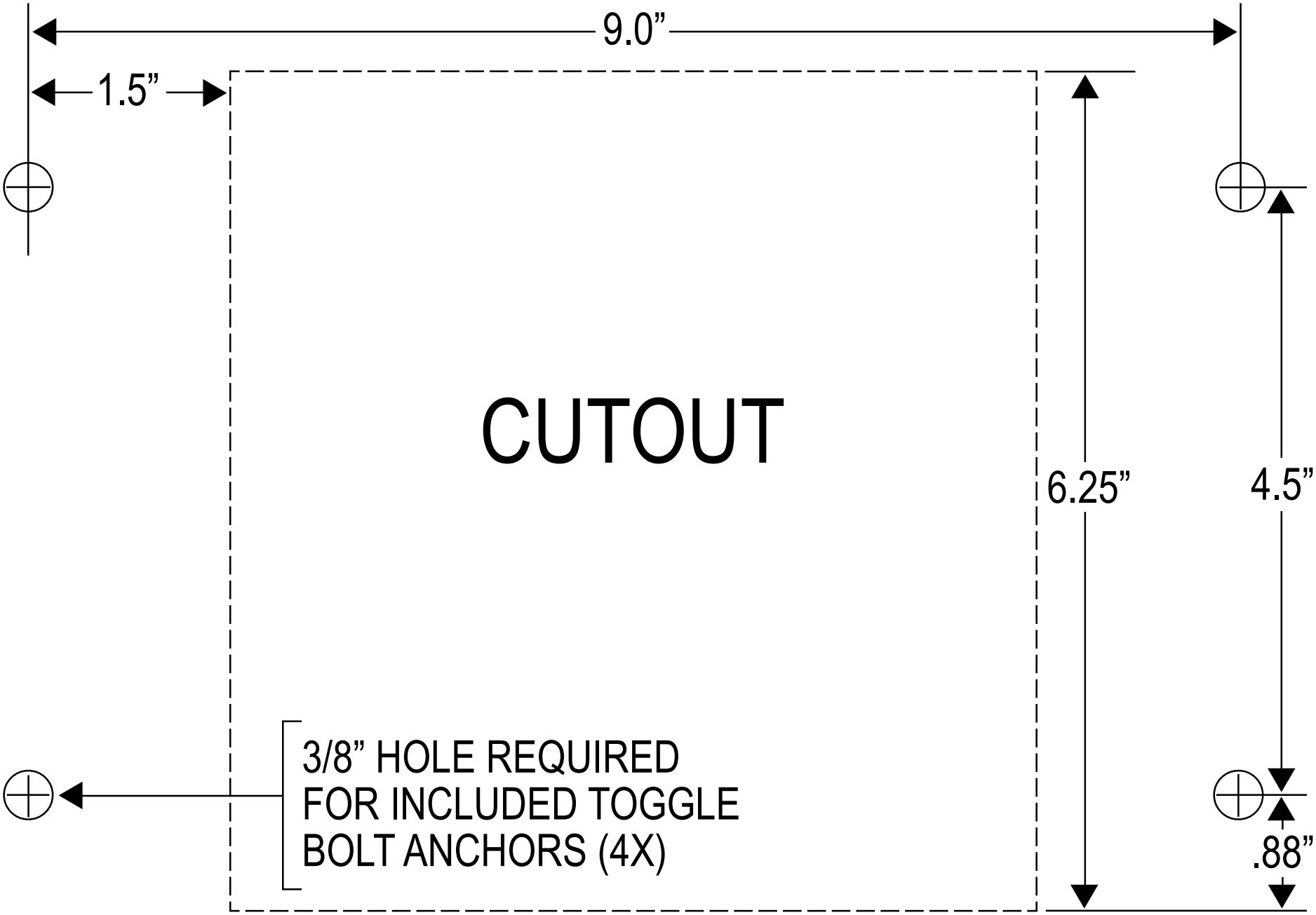

Form Number VL1167 Template