TelemixX™

USER'S MANUAL

GENTNER™

540 West 3560 South
Salt Lake City, Utah 84115
(801) 268-1117
TWX: 910-380-6909 (GENTNER UD)

TABLE OF CONTENTS

SECTION ONE SUMMARY
1.1 Introduction.....1-1
1.2 Overview.....1-1

SECTION TWO PRODUCT DESCRIPTION
2.1 Telemix X System Block.....2-1
2.2 Call Director Electrical Specifications.....2-2
2.3 Call Director Physical Specifications.....2-3
2.4 Standard Control Surface Physical Specs.....2-5
2.5 Compact Control Surface Physical Specs.....2-5
2.6 Warranty Information.....2-7

SECTION THREE INSTALLATION
3.1 Initial Inspection.....3-1
3.2 Cautions.....3-3
3.3 1A2 Key Service Installation.....3-4
3.4 Telemix X Call Director Installation.....3-4
3.5 Telemix X Call Director Setup Options.....3-9
3.6 Installation of Telemix X Control Surfaces...3-11
3.7 Installation of Telephone Hybrids.....3-12
3.8 Installation of the Telemix X Cabling.....3-13
3.9 Installation of the RS232 Option.....3-15

SECTION FOUR OPERATION
4.1 Standard Operation-1 CD, 1 Hybrid.....4-1
4.2 Standard Operation-1 CD, 2 Hybrids.....4-2
4.3 Standard Operation-2 CD, 1 Hybrid.....4-2
4.4 Standard Operation-2 CD, 2 Hybrids.....4-3
4.5 Standard Operation-2 CD, 4 Hybrids.....4-3
4.6 Using Mutes and the Dump Feature.....4-4
4.7 Producer Interface (Screening Calls).....4-4
4.8 Using the RS232 Option.....4-5

SECTION FIVE TECHNICAL DESCRIPTION
5.1 1A2 KSU.....5-1
5.2 Call Director Microprocessor Theory.....5-2
5.3 Telephone Line Switching.....5-3
5.4 Inputs.....5-3
5.5 Outputs.....5-3
5.6 Power Supply.....5-4
5.7 RS232 Option.....5-4

SECTION SIX MAINTENANCE
6.1 Recommended Spare Parts.....6-1
6.2 Troubleshooting Helps.....6-1
6.3 Gentner Engineering Customer Service.....6-2

TABLE OF CONTENTS (CONT.)

7.1 1A2 9-line Extension Wiring Format.....7-1
7.2 Call Director J1 Control Surface Connections.7-2
7.3 Dual Call Director Control Block Connections.7-3
7.4 Call Director J3 AUX Connections.....7-4
7.5 Electrical Schematic CD Motherboard.....7-5
7.6 Electrical Schematic CD RS232 Option.....7-7

SECTION ONE

SUMMARY

1.1 Introduction

The purpose of this manual is to provide the necessary installation, operational, and maintenance information needed for use of the Gentner Telemix X telephone system. We recommend that this manual be completely read before the system is installed.

1.2 Overview

Telemix X is a modular approach to broadcasters' telephone interface needs. It provides an easy method for operators and talent to place callers on the air. A push of one button is all that is required when operating a Telemix X System.

The system consists of three main sections: 1. Control Surface(s). 2. Call Director and Hybrid(s). 3. A 1A2 Key Service Unit. These sections are shown below in a block diagram.

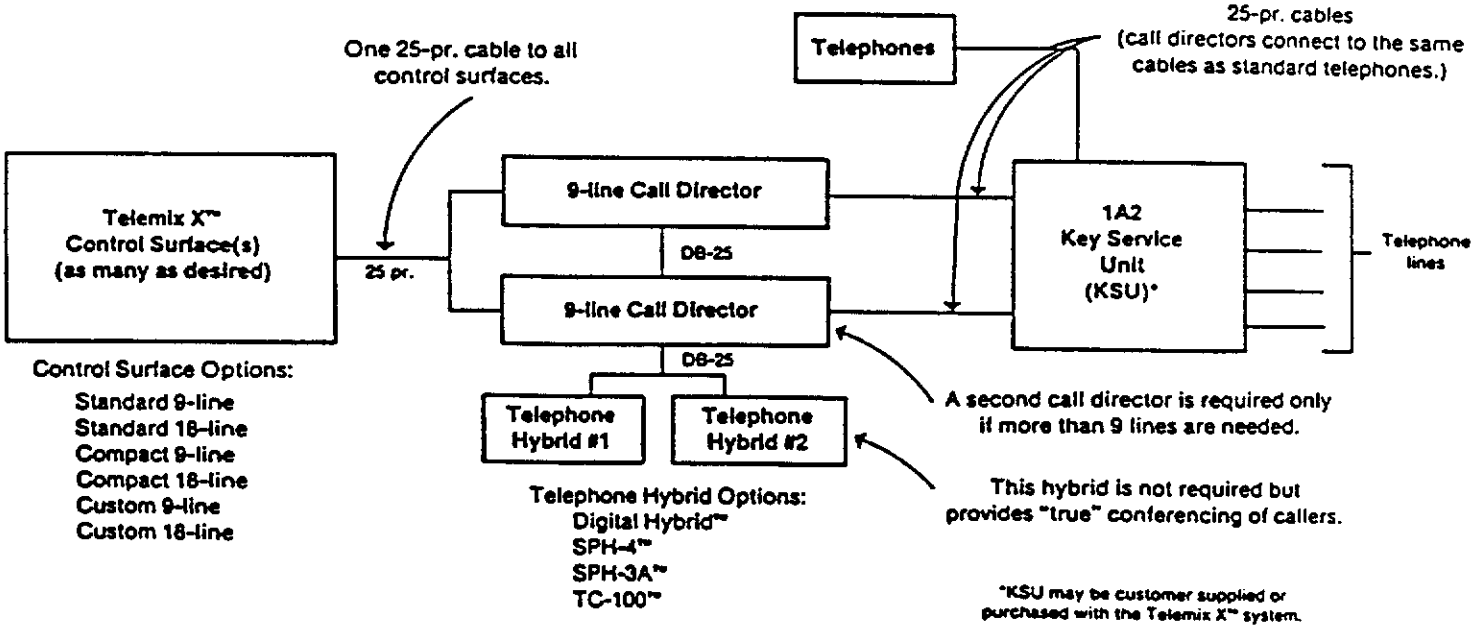

TELEMIX X™ SYSTEM BLOCK DIAGRAM

Refer to the block diagram. The "first" section of the Telemix X system is the control surface, which is the only portion of the system seen by the operators. This consists of a small table-top unit with a connectorized 25-pair cable in the back. Depending on the type of system ordered, the control surface will have either 9 or 18 line switches along with the "OFF," "HOLD," "CONF," and "DUMP" switches. Each control surface is available in two sizes; refer to Section 2.0 of this manual for physical specifications. Operation of the control surface is described in section 4.0 of this manual.

You may use as many Control Surfaces as desired in your system but systems with more than two control surfaces will need to be powered externally.

The next section of Telemix X is the Call Director and Hybrid(s). These will usually be placed in your main equipment room. The Call Director, contained in a 1-3/4 inch, rack-mount chassis, simply routes telephone audio pairs from the output of a 1A2 Key Service Unit to external telephone hybrids. The Call Director also provides the power to the Control Surface(s).

If you are installing an 18-line Telemix X system, two Call Directors will be required.

The telephone hybrid takes a telephone line selected by the Call Director and interfaces it to your audio equipment, separating the telephone signal into individual "send" and "receive" pairs. Either one or two telephone hybrids may be used per Call Director. Two hybrids should be used if multiple callers will be on the system at the same time.

The final section, of the Telemix X system is the 1A2 KSU.

It is very important to note the following:

TELEMIX X INTERFACES ONLY TO A 1A2 KEY SERVICE UNIT!

The system has been expressly designed for use with this type of telephone system, which is an industry standard for providing reliable multiple line selection within a facility. A 1A2 system can easily be identified by the "fat" 25-pair cables running to each telephone extension. If you do not have a 1A2 KSU, one must be installed before further installation of the Telemix X system can take place.

Since the quality of telephone audio depends to an extent on the hybrid used, care should be taken to make sure the hybrid meets your applicational needs. Gentner manufactures the following telephone hybrids, all of which easily interface to the Telemix X Call Director:

1. The Digital Hybrid, Gentner Part# 910-009-001. This is an auto-nulling telephone hybrid. It incorporates digital signal processing and sharp telephone bandpass filters to optimize its performance. This hybrid, unlike other hybrids, is not frequency dependent and the hybrid return loss, removal of the unwanted discoloration of send audio, is continually being optimized. Send and receive audio processing ensures consistent levels to and from the caller. It also has auto-answer and caller ducking ("Caller Control") capabilities.

2. The SPH-4, Part# 910-010-001. This single phone hybrid is configured with 600 Ohm balanced inputs and outputs. In addition to being fully remotable, it has a built in monitor amplifier, user settable caller ducking ("Caller Control"), monitor dimming, receive audio muting ability, masking of telephone connection noise, and a built in test tone oscillator. The SPH-4's hybrid null is a one-time user setup.

3. The SPH-3A, Part# 910-008-001. This single phone hybrid was designed for easy interfacing to a broadcast console or other audio equipment with balanced 600 ohm inputs and outputs. The SPH-3A has a built in monitor amplifier and is easily remoted. Its hybrid is a wheatstone bridge with one-time setup nulling performed by the user.

4. The TC-100, Part# 910-007-002. This unit masks telephone connection noise and is easily remoted. Hybrid null is achieved via one-time setting of resistive and capacitive components to match telephone line impedance. The TC-100 is the least expensive hybrid available for the Telemix X system. This product is available in four configurations and may be used in many other applications, including automatic-answer information lines or simple remote control.

Specific set-up information for the hybrid used in your Telemix X system can be found in that hybrid's User's manual. For information on using Gentner hybrids in other applications at your facility, contact your distributor or Gentner's Sales department.

SECTION TWO

PRODUCT DESCRIPTION

2.1 Telemix X System Block Diagram

As discussed previously, Telemix X is a modular system consisting of three major sections. They are the Control Surface(s), the Call Director(s) and the Telephone Hybrid(s), and the KSU. These are shown below in a block diagram. Note that only two hybrids are shown but each call director is capable of interfacing to two hybrids.

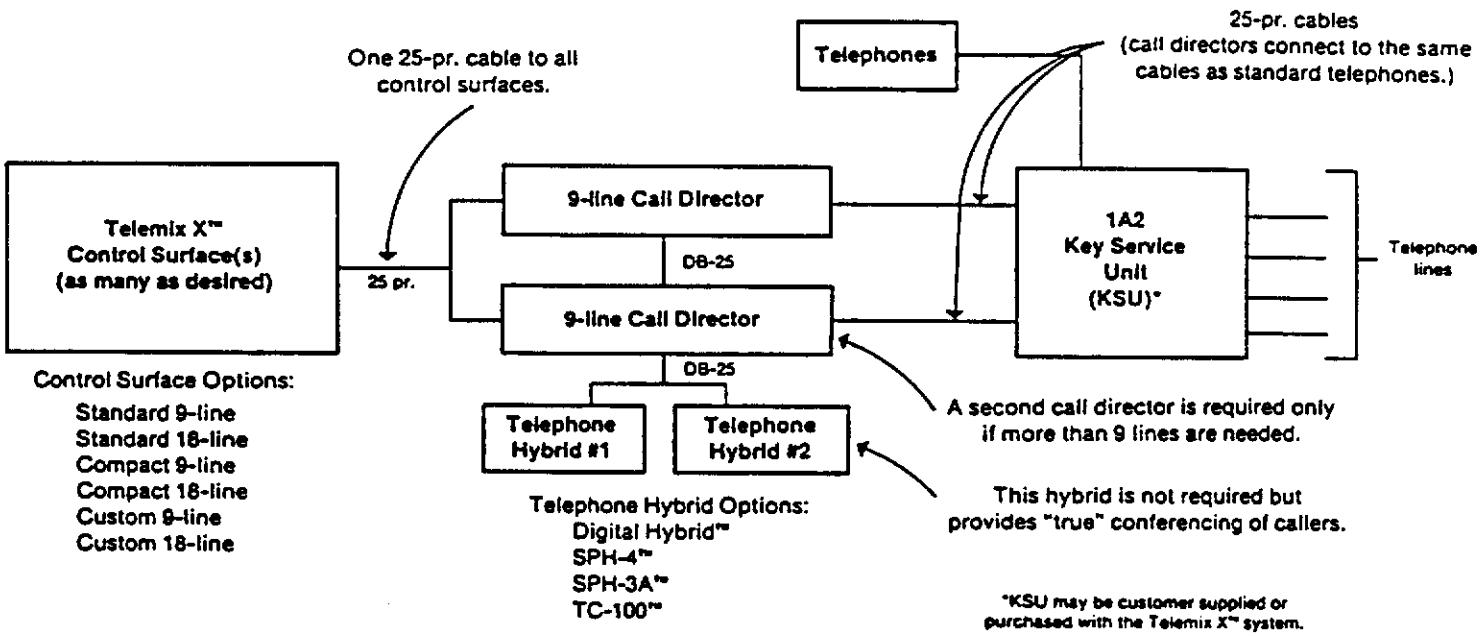

TELEMIX X™ SYSTEM BLOCK DIAGRAM

2.2 Call Director Electrical Specifications

Power:	117/234 VAC 50-60Hz, 8 Watts nominal
Temperature Range:	0 to 50 Degrees C
System Type:	Motorola MC146805E2 Microprocessor based telephone switch.
Modes of Operation:	1. Single Call Director/Single Hybrid 2. Single Call Director/Dual Hybrids 3. Dual Call Directors/Single Hybrid 4. Dual Call Directors/Dual Hybrids 5. Dual Call Directors/Triple Hybrids 6. Dual Call Directors/Quad Hybrids
Key Service Compatibility:	1A2 Key Service Unit
1A2 KSU Control:	MCA11G1 Optocoupler A-lead closures. MCA11G1 Optocoupler Lamp Detection.
T-R Switch Configuration:	Omron Relays, G6AK-234P +5VDC Set/Reset Coils driven by ULN2803A Octal High Current Darlington Transistor Arrays.
Microprocessor Ports:	Motorola MC146823 Parallel Interfaces.
Memory Type:	CMOS Read Only Memory (Firmware).
Control Inputs:	Switch closures to ground opto-isolated with MCA11G1 optocouplers.
Report Outputs/Control:	ULN2803A Octal High Current Darlington Transistor Arrays rated at 250 mA.

2.3 Call Director Physical Specifications

The Telemix X Call Director is contained in an 1.75 inch, rack mountable chassis. The actual physical dimensions are 1.75" high, 19" wide, and 10" deep. Rack mounting ears are permanently attached to the front panel of the Call Director.

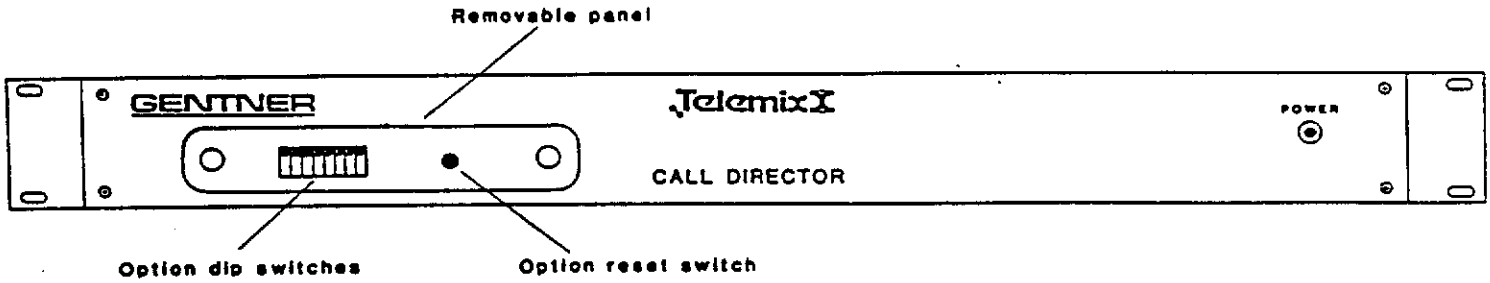

Call Director Front Panel

* The option reset switch resets the microprocessor.

The Call Director's front panel includes a LED power indicator and a removable panel which conceals the setup option switches and a microprocessor reset switch. Setup option switches include:

1. Selection of One or Two Hybrids.

2. Main or Slave Call Director Designation.

3. Selection of Sustained/Momentary Remote Control for Hybrid #1.

4. Selection of Sustained/Momentary Remote Control for Hybrid #2.

5. Selection of single or dual Bus configuration.

These switch settings are defined further in section 3.0 of this manual.

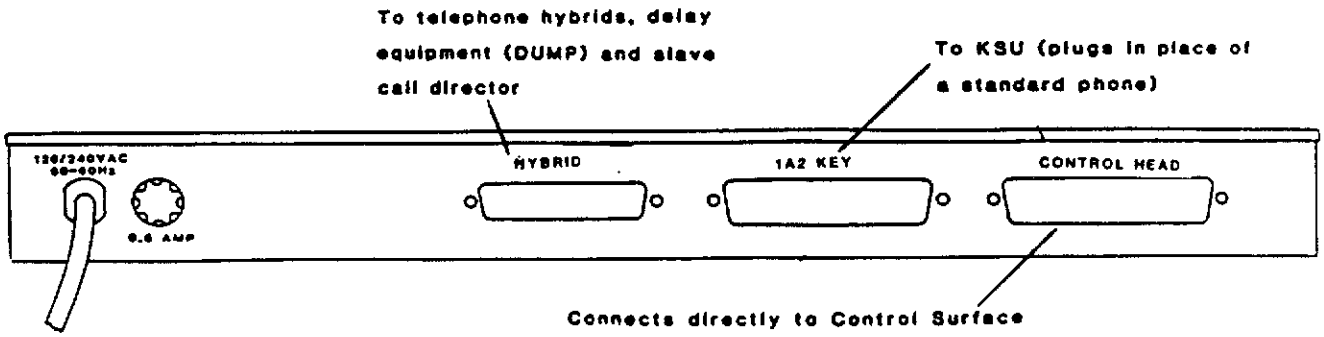

Call Director Rear Panel

The rear panel contains three connectors. The 50D labeled "1A2 KEY," is used for the connection to the 1A2 KSU. The Call Director connects to the KSU just like a standard telephone.

The connector labeled "Control Head" is also a 50D and brings out connections to control surface switches and lamps.

The other connector is a DB-25. This connector contains Bus A and Bus B telephone audio, ON, OFF and MUTE controls for two hybrids, connections used for serial data transmission between two Call Directors, and pins for RS232 serial data transmission.

The rear panel also contains the power line cord which is fused with a .5 Amp Slo-Blo fuse.

2.4 Standard Control Surface Physical Specifications

The standard control surfaces for the Telemix X are made in two varieties: One for eighteen telephone line control and one for nine line control.

All four control surfaces are shown on the following page.

Both the nine line and eighteen line standard control surfaces are 3.7" high, 9" wide, and 5.2" deep. Both have oak end panels. They are engineered using Microswitch AML12 switches which include an internal LED for lamp report back.

2.5 Compact Control Surface Physical Specifications

The compact control surfaces for the Telemix X are made in two models: One for eighteen telephone line control and one for nine line control.

Both the nine line and eighteen line models of the compact control surface are 1.9" high, 5.8" wide, and 5" deep. They are manufactured with ITT Schadow keyswitches with an internal LED for lamp report back.

All four control surfaces are shown on the following page.

In addition to the control surfaces described above, custom-manufactured control surfaces are available to suit your requirements. Call Allied Broadcast Equipment or the Gentner Sales department for details.

9-Line Standard
9-Line Compact
18-Line Standard
18-Line Compact

2.6 Warranty Information

Gentner Engineering Company warrants that this product is free from defects in both materials and workmanship. Should any part of this equipment be defective, Gentner Engineering Company agrees, at its option, to:

A. Repair or replace any defective part free of charge (except transportation charges) for a period of one year from the date of the original purchase, provided the owner returns the equipment to Gentner Engineering Company at the address set forth below. No charge will be assessed for parts or labor during this period.

B. Replace or furnish replacement for any defective parts in the equipment for a period of one year from the date of the original purchase. Replacement parts shall be furnished without charge except for labor and transportation.

This warranty excludes assembled products not manufactured by Gentner Engineering Company, whether or not they are incorporated in a Gentner Engineering Company product or sold under a Gentner Engineering Company part or model number.

THIS WARRANTY IS VOID IF:

A. The equipment has been damaged by negligence, accident or mishandling, or has not been operated in accordance with the procedures described in the operating instructions; or,

B. The equipment has been altered or repaired by other than Gentner Engineering Company personnel or an authorized service representative of Gentner Engineering Company; or,

C. Adaptations or accessories other than those manufactured or provided by Gentner Engineering Company have been made or attached to the equipment which, in the determination of Gentner Engineering Company, shall have affected the performance, safety or reliability of the equipment; or,

D. The equipment's original serial number has been modified or removed.

NO OTHER WARRANTY, EXPRESS OR IMPLIED, INCLUDING WARRANTY OF MERCHANTABILITY OR FITNESS FOR ANY PARTICULAR USE, APPLIES TO THE EQUIPMENT, nor is any person or company authorized to assume any warranty for Gentner Engineering Company or any other liability in connection with the sale of Gentner products.

Gentner Engineering Company does not assume any responsibility for consequential damages, expenses or loss of revenue or property, inconvenience or interruption in operation experienced by the customer due to a malfunction in the purchased equipment. No warranty service performed on any product shall extend the applicable warranty period.

In case of unsatisfactory operation, the purchaser shall promptly notify Gentner Engineering Company at the address set forth below, in writing, giving full particulars as to the defects or unsatisfactory operation. Upon receipt of such notice, Gentner Engineering Company will give instructions respecting the shipment of the equipment, or such manners as it elects to honor this warranty as above provided. The warranty does not cover damage to the equipment during shipping and Gentner Engineering Company assumes no responsibility for such damage. ALL SHIPPING COSTS SHALL BE PAID BY THE CUSTOMER.

THIS WARRANTY EXTENDS ONLY TO THE ORIGINAL PURCHASER AND IS NOT ASSIGNABLE OR TRANSFERABLE.

Gentner Engineering Company, Inc.
540 West 3560 South
Salt Lake City, Utah 84115
(801) 268-1117

SECTION THREE

INSTALLATION

3.1 Initial Inspection

In unpacking the shipping containers, take time to verify contents against the packing list attached to the outside of the cartons. Should discrepancies be found report them immediately to Allied Broadcast Equipment or Gentner.

Following this verification, check containers for any damage caused in shipment. If external damage is found, notify the carrier or shipping company. A damage claim must be filed with the carrier as Gentner's warranty policy does not cover shipping damage. However, please notify Gentner Customer Service of any shipping damage or other problems in shipment.

In order to install the Telemix X system, the following components should be on hand:

A 1A2 Key Service Unit (see section 3.3).

At least one (1) Telemix X Call Director (two if you have purchased an 18-line system).

At least one (1) Telemix X Control Surface.

At least one (1) telephone hybrid (Digital Hybrid, SPH-4, SPH-3A or TC-100).

25-pair cables for the following cable runs:
KSU to Call Director(s) and telephones.
Call Director(s) to Control Surface(s).

Cable for connection of hybrid(s) to Call Director(s) (see section 3.8).

Cables for connection of hybrid(s) to audio equipment (see section 3.7).

"Conversion" punch block if you have an 18-line system (see section 3.5).

The above items may be ordered if needed through Allied Broadcast Equipment or Gentner.

The Telemix X Call Director may be operated from either a 117 or 234 VAC line. Unless ordered otherwise, the unit will be shipped configured for 117 VAC operation. It is important to note that connection to the correct AC voltage line is mandatory. The following paragraphs and diagram give instructions on checking AC line wiring.

The Telemix X Call Director power transformer wiring harness, located inside the chassis near the AC line cord, has molex connectors to provide correct input to the transformer. The White Molex receptacle should be used if the AC-line is 117 VAC. The Red connector is used when the AC-line is 234 VAC.

The diagram below shows how to make proper connection to either a 117 or 234 VAC line. When received from the factory the unit will be setup for 117 VAC operation unless marked otherwise.

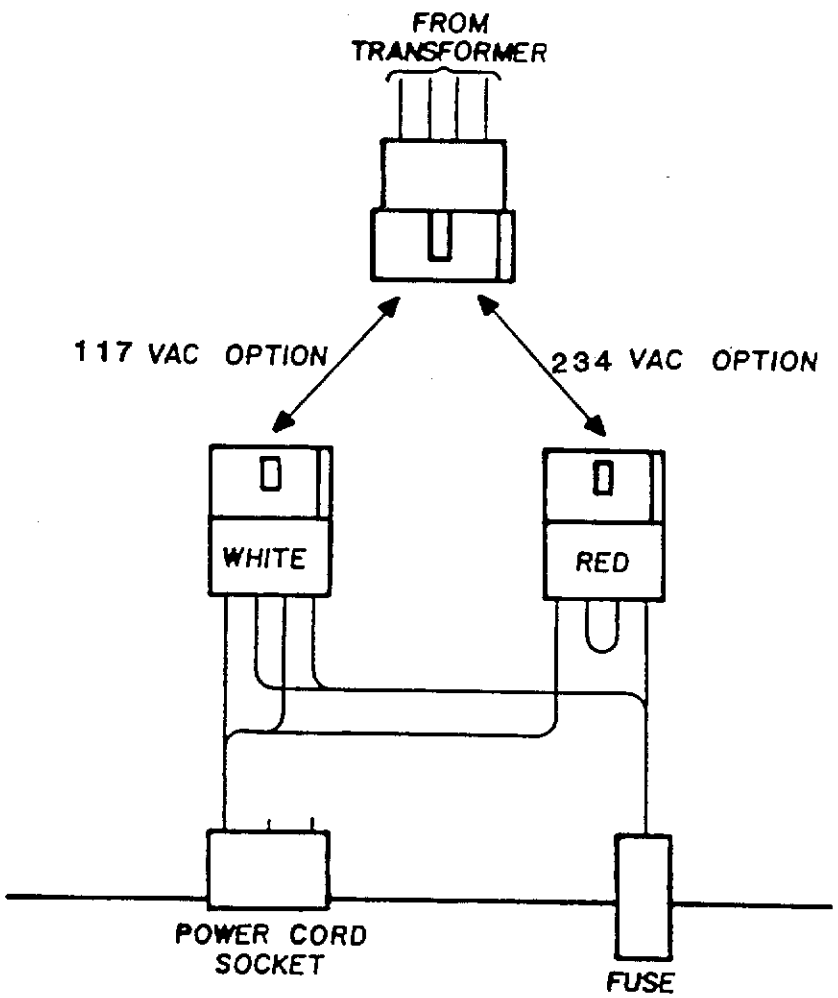

3.2 Cautions

A. Check Call Director's AC line power transformer harness for correct AC potential input as explained in section 3.1.

B. The Call Director contains CMOS integrated circuits. Care should be taken in controlling static when the cover of the unit is off.

C. The Call Director fuses the +5VDC supply to the control surface at .75 amps. If the user is engineering a custom control surface, this should be taken into account. This protects the Call Director's power supply against current drain over supply rating.

D. After setting the front panel Call Director option switches, the Reset Button should be depressed to complete the operation. This reinitializes the Call Director.

E. Rapid selection of telephone lines during operation is not recommended.

3.3 1A2 Key Service Installation

If installation of the Telemix X system includes a new 1A2 KSU, additional time and mounting space will need to allotted for this.

The 1A2 Key is recognized by its familiar 25 Pair Western Electric color-coded cables running to each telephone extension. It is an industry standard for business and commercial use of mutiple line telephone trunks.

The 1A2 generates on site signaling and control which include an AC ringing generator, a Talk supply, a Lamp supply, A-Lead control, and hold coils. These controls are routed to the user through 1A2 line cards. There are as many line cards in a 1A2 as there are central office lines coming to the site.

The Telemix X will perform just like an extension of the 1A2 KSU with the exception that audio will not be routed to a telephone handset. The Telemix X routes tip-ring telephone audio to hybrids for individual control and monitoring of send and caller audio.

If a new 1A2 Key Service has been ordered from Gentner Engineering, mounting and further technical and installation instructions will be enclosed with the KSU.

3.4 Telemix X Call Director Installation

This unit is designed to mount in a 19" rack either in the studio, in an engineering center, or near the 1A2 Key Service Unit. Remember that the Call Director connects to the KSU just like a telephone set.

In single Call Director systems setup is quick and easy. The diagram below shows all the components in a single Call Director Telemix X system.

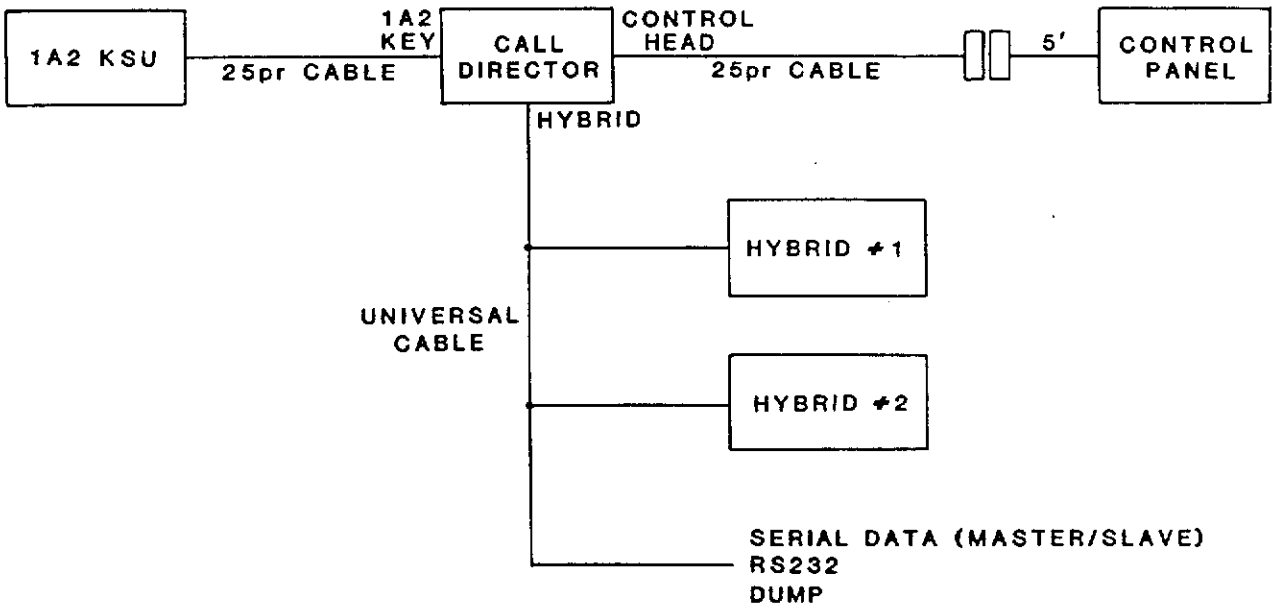

An output trunk of the 1A2 connects to the Call Director's "1A2 KEY" 50D. This is the telephone T-R connections to the switching relays in the call director which will be routed to the "HYBRID" connector. The signaling functions of the 1A2 KSU are also brought into the call director at this connector.

A nine line control surface, which comes standard with five feet of flexible 25 pair cable, connects via a 25 pair extender cable to the call directors "CONTROL HEAD" 50D.

Note the "universal" cable assembly which fans out the "HYBRID" connector. This cable interfaces to the hybrids used in the system. Refer to the sections on hybrid and cable installation for more details on connecting hybrids.

In dual Call Director systems a few more connections are required to setup the system. The diagram below shows a dual call director system.

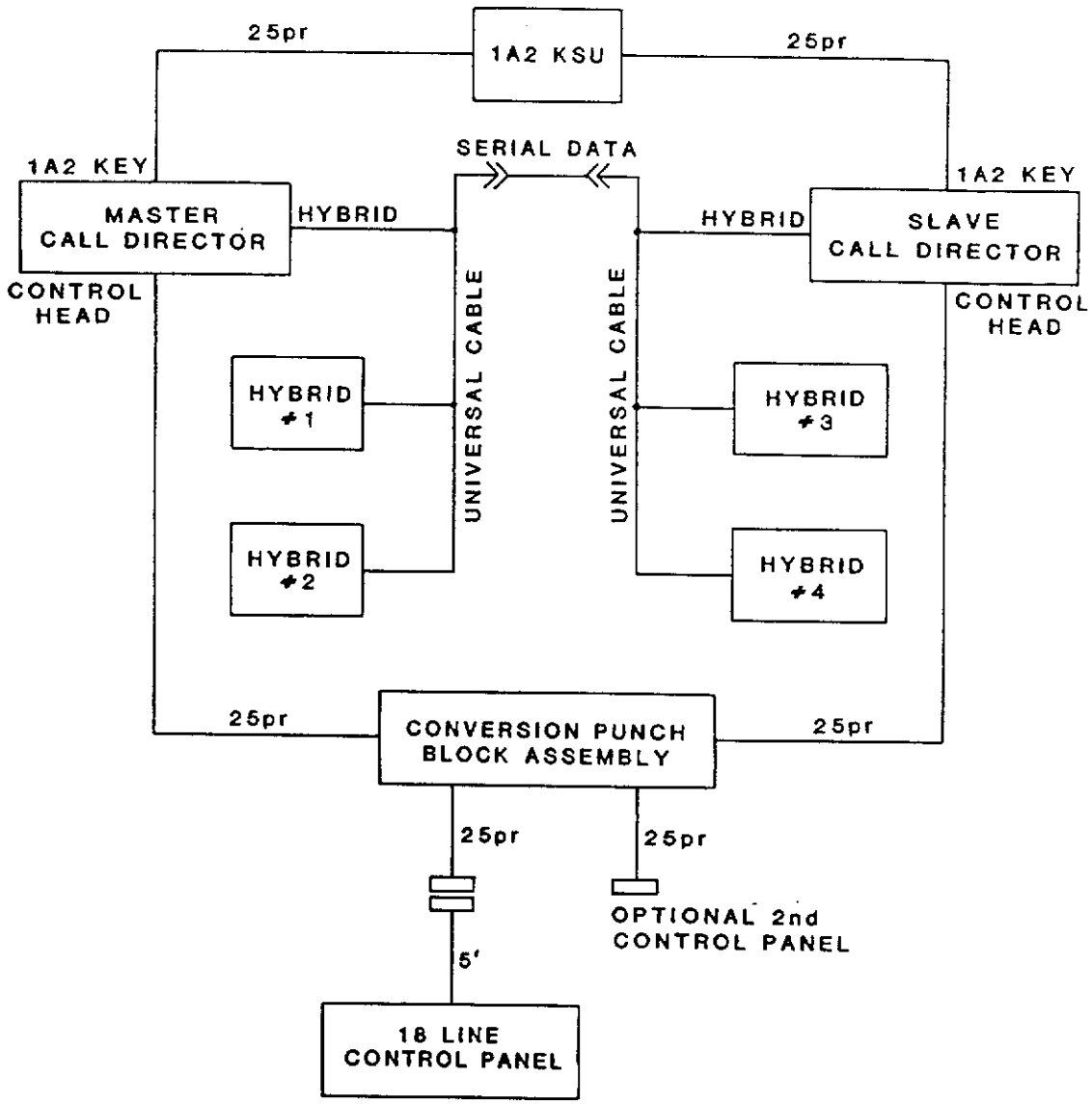

A 25-pair cable will connect the output of the KSU to the "1A2 KEY" 50D on each call director.

A 25-pair cable will connect each Call Director to a Gentner Easyterm/66 "conversion" punch block. This block contains all the switch contacts, lamp commons, grounds, and power supply connections needed to control both Call Directors with a single control surface. Note that an "optional" control panel is provided for on the conversion punch block assembly to provide remote control from two places if desired.

This "Conversion" block is a standard product accessory whenever a 18-line control surface is purchased.

This "Conversion" punch block was designed into the dual Call Director-18 line Telemix X systems for ease in wiring. Since each Call Director can switch only nine lines, a way to easily connect an eighteen line contol surface to two Call Directors was needed. The connections on this block can be found in section 7.3 of this manual.

The "universal" cable from each call director provides connections to wire two call directors together, to control hybrids, and to bring out telephone audio.

The "HYBRID" DB-25 connector contains the following functions'.

1. Hybrid Controls: Connections for controlling two hybrids and separate drivers for ON, OFF, and MUTE. These connections are explained in section 3.7.

2. Telephone Audio: Tip-Ring Audio from any selected phone line. These connections are also explained in section 3.7.

3. Serial Connection Port: Used in defining Dual Call Director Systems. This is explained in the following paragraphs.

4. RS232: Connections for TX, RX and GND. Defined in section 3.9.

When hooking two call directors together, the connections discussed on the following page are required. All of these connections are brought out on the Call Director J3, "universal" connector. It is terminated with Molex plugs for easy interfacing. See section 3.8 for details on this "universal" cable assembly.

Installation of Master and Slave Call Directors
(For 18-line Telemix X systems)

One Call Director needs to be selected as the Master Unit. This is done by moving option switch #2 to its up position on one Call Director. The second Call Director needs option switch #2 OFF, which is in the DOWN position. This designates the second Call Director as the "Slave."

Serial Interface connections between the two Call Directors are required. These connections are made by connecting the designated "Call Director" five pin Molex terminated connectors from each call directors "Universal" Cable together. This is done by inserting the included 5-pin Molex cross-connect cable in between each Call Directors pins 3-6.

This step connects the two call director processors with serial data read and write bits.

The diagram below labels the serial interface pins as to their function and interconnection. All connections are automatically made when using supplied cables from Gentner Engineering. Refer to section 3.8 for more details on Telemix X cables.

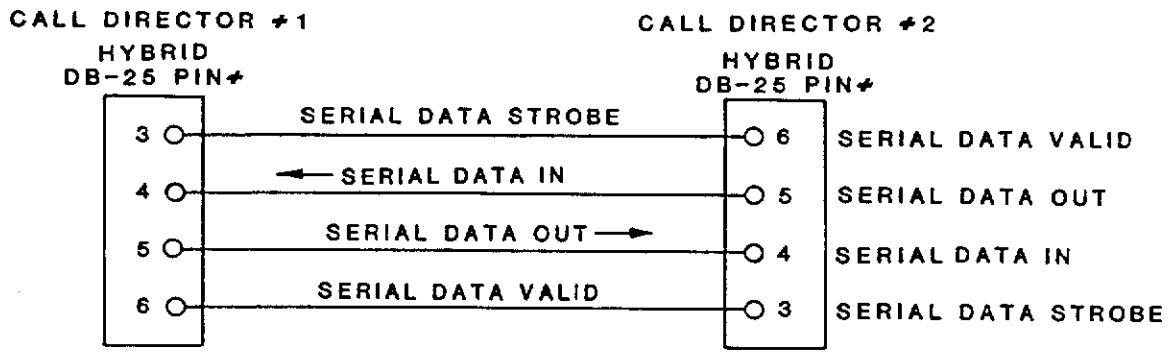

3.5 Telemix X Call Director Setup Options

Telemix X's modular approach makes setup simple. Once all the installation procedures are complete, system configuration is done via the front panel option switches of the Call Director. These options, as labeled on the back of the insert panel on the front panel of the Call Director, are:

#	UP Position	DOWN position
1	Two Hybrid Enable	One Hybrid Enable
2	Master Unit Enable	Slave Unit Enable
3	Hybrid #1 Sustained Control	Hybrid #1 Momentary Control
4	Hybrid #2 Sustained Control	Hybrid #2 Momentary Control
5	Dual Bus Enable	Single Bus Enable

The "Two Hybrid Enable" switch in the UP position means that the telephone audio will be routed to both Bus A and Bus B audio ports if more than one line is active on that Call Director. For example, in a single Call Director, 9-Line system, with two hybrids wired to the DB-25, this switch should be enabled to allow conferencing between the hybrids. Otherwise, only the Hybrid connected to Bus A will be used.

The "Master Unit Enable" switch should be enabled on single call director systems and enabled on only one call director in dual call director systems. When UP this DIP switch marks that call director as the master. Since interfacing between the units is performed via serial data, the Master Call Director collects the status of the Slave Call Director to keep track of line usage and availablity of hybrids. The Master Call Director, since it monitors the operation of the Slave unit, also has the capability of being fitted with the RS232 option.

The third and fourth option switches provide for control of different hybrids. To provide sustained remote control to Hybrid #1, switch #3 should be in the UP position. To provide sustained remote control to Hybrid #2, switch #4 should be in the UP position. Otherwise, the ON and OFF J3 control functions will be momentary.

Information can be found in the individual hybrid User's Manuals as to the necessary ON/OFF control logic. (SPH-3A and TC-100 have sustained control, the SPH-4 is controlled with momentary closures, and the Digital Hybrid can be configured with either momentary or sustained control logic.)

The fifth switch, labeled "Dual Bus Enable," is only applicable in dual Call Director systems with three or more hybrids.

When UP, or enabled, this function designates that callers selected on the 1A2 KSU lines 1-9, typically the control surface top bus, are routed to one set of hybrids and callers selected on lines 10-18, the bottom bus on a control surface, are routed to the other set of hybrids. This also allows the option of paralleling nine lines to two call directors.

When disabled, meaning operation is single bus, the call directors share hybrids. In two call director systems where only one hybrid is used this switch should be set DOWN and the hybrid controls and telephone Bus A audio from each call director should be paralleled. In two Call Director / Two Hybrid single bus operation, Bus A, Bus B, and Hybrid controls are paralleled from each Call Director to the individual hybrid.

The first hybrid connected to Hybrid #1 controls and Bus A telephone audio, has priority when lines are selected. The first call selected goes to Hybrid #1. Any additional calls selected are directed to hybrid #2.

Either Dual Bus or Single Bus system configurations can be quickly established using supplied cables.

3.6 Installation of Telemix X Control Surfaces

When single Call Director Telemix X systems are purchased with a single 9-line control surface, the control surface will connect directly to the Call Director's "Control Panel" 50D via a 25-pair cable. Connectorized 25-pair cables are available from Gentner if needed.

When dual Call Director Telemix X systems are purchased, the Call Director includes a fan out Gentner Easyterm/66 punch block for the interface to the Call Director Control Panel 50D. This block contains 25-pair cables that connect to each Call Director and 25-pair cables which can attach two control surfaces to the system.

The connection points of a single call directors control surface 50D are shown below. For more details on the "Conversion" punch block refer to section 7.3.

J1, 50D Call Director Connections

Block Pin	J1 Pin	Function	Block Pin	J1 Pin	Function
2	1	Hold Lamp	28	14	Conf Switch
4	2	Line 9 Lamp	30	15	Line 6 Switch
6	3	Conf Lamp	32	16	Line 7 Switch
8	4	Line 8 Lamp	34	17	Line 5 Switch
10	5	Off Lamp	36	18	Line 1 Switch
12	6	Line 6 Lamp	38	19	Line 2 Switch
14	7	Line 7 Lamp	40	20	Aux-Dump Switch
16	8	Line 5 Lamp	42	21	Line 4 Switch
18	9	Line 4 Lamp	44	22	Line 3 Switch
20	10	Line 3 Lamp	46	23	Line 8 Switch
22	11	Line 2 Lamp	48	24	Off Switch
24	12	Line 1 Lamp	50	25	Line 9 Switch
26	13	Hold Switch	39,41	45,46	GROUND
			43,45	47,48	Fused +5 VDC
			47,49	49,50	Fused +5 VDC

A Closure to ground on any of the switch functions above will initiate that function. As an example, if J1 pin #14 is grounded that call director will enter the conference mode of operation.

The "Lamp" connections are call director initiated open-collector drivers to provide report back. For instance, if the call director receives a closure on J1 pin #18, the selection of telephone line #1, it will turn on the required line relay and drive the output connected to J1, pin #12 which is the lamp control for that line.

3.7 Installation of Telephone Hybrids

The audio selectively routed from the 1A2 KSU through the Call Director appears on the rear panel DB-25. Remember that this connector is fanned out with the "Universal" cable assembly which gives easy access to required hybrid signals.
These connections are as follows:

Tip Bus A - Pin #22	Tip Bus B - Pin #24
Ring Bus A - Pin #23	Ring Bus B - Pin #25

Remember that Bus A and Bus B are balanced telephone audio pairs. The audio routed through the Call Director from the 1A2 KSU telephone lines will appear at the outputs when the proper line relay is engaged via control surface remote control.

These audio pairs will be connected to the telephone line input of the hybrid. Gentner hybrids use a standard RJ-11C modular connector for line connection.

Connection between the hybrid and your audio equipment is typically done via XLR cables. All of Gentner's hybrids, with the exception of the TC-100, (which uses a barrier strip), use XLR connectors as the "send" input and "caller" output.

The hybrids also need to be remotely controlled by the Call Director. This allows the Call Director to turn the hybrid on, off, and if applicable, perform receive audio mutes. This connection is also done via the rear panel DB-25. These connections are explained below.

Pin #	Function	Application Notes:
8	Hybrid 1 On	Driver to activate Hybrid 1
9	Hybrid 1 Off	Driver to deactivate Hybrid 1
10	Hybrid 1 Mute	Driver to mask connection
7	Hybrid 2 On	Driver to activate Hybrid 2
12	Hybrid 2 Off	Driver to deactivate Hybrid 2
11	Hybrid 2 Mute	Driver to mask connection

Pins 10-11, the hybrid mutes, are an extra open-collector control feature which is active when selecting telephone lines. This helps mask the connection noise when wired to a hybrid which performs this muting (Digital Hybrid, SPH-4 and TC-100).

Each Call Director is shipped with an accessory cable which fans out these connections. When ordering a Telemix X System with Gentner Hybrids, all cross-connect cables will be included. Consult the next section of this manual for details.

Consult the individual hybrid user's manuals for information on conference bridges. Typically this is performed by cross-connecting unbalanced inputs to unbalanced outputs or creating a separate mix bus.

3.8 Installation of the Telemix X Cabling

To connect the Telemix X modular system together the following cables are required. The (*) notes which cables are included as a standard accessory. All other cables can be ordered from Allied Broadcast Equipment or Gentner.

1. A 25 pair cable from the Call Director to the 1A2 KSU.

2. A 25 pair cable from the Call Director to the operation point, i.e., the place where the control surface will be used.

3.* A cable which accomodates the use of dual Call Directors. This is the cable that ties serial data streams for Master/Slave Call Director operation. This cable assembly will be supplied when ordering two call directors together.

4.* A cable which interfaces dual Call directors to 18-line control surfaces. This is done via the standard "Conversion" Gentner Easyterm/66 punch block. Its format is detailed in section 7.3.

5.* A cable which fans out the Call Director "HYBRID" connections. This is the "Universal" cable assembly. See next page.

6. A cable connecting the Call Director "Universal" fanout cable to the Hybrids. This cable carries remote control signals to the hybrids as well as telephone audio. These are made for each of Gentner's hybrids. When ordering Telemix X systems that include Gentner hybrids, these cables will be included.

The standard cable mentioned in step 5 on the previous page, the AUX fanout, is shown below. The five pin Molex, dual call director serial data connector, is mated in dual call director systems. The two six pin Molex connectors contain hybrid controls and selected telephone audio.

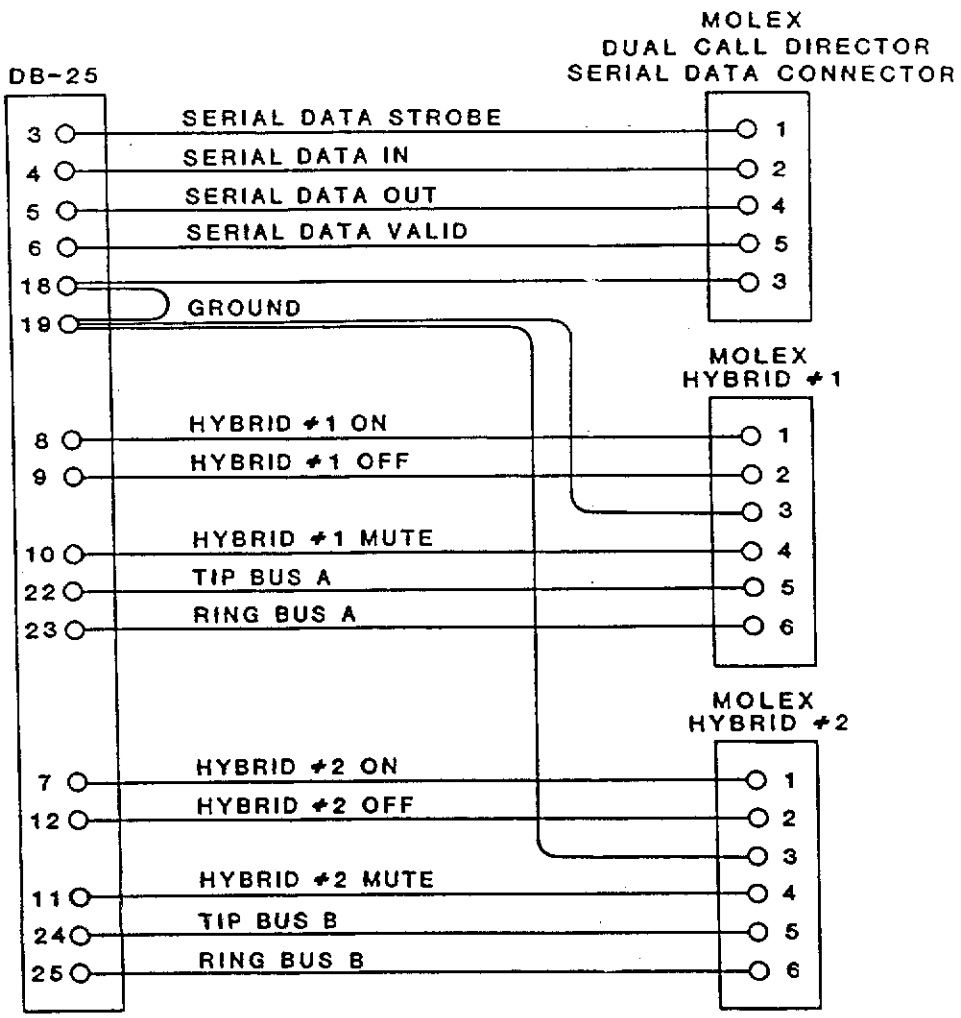

UNIVERSAL INTERFACE CABLE
830-004-001

3.9 Installation of the RS232 Option

The optional Telemix X RS232 option is a separate assembly which is mounted inside the Call Director. (Inside the Master Call director in a dual Call Director System.)

This option is contained on a separate printed circuit board and mounts on the dual row header J5 inside the Telemix X Call Director. It is fastened down by a single #6 screw inserted into a MF Hex Spacer.

When installed this options communication lines are provided through the "HYBRID" rear panel J3 connector as follows:

RS232 J3 Connections

J3 Pin	Function	Standard RS232 Pin
*14	RTS (Ready to Send)	4
*15	DTR (Data Terminal Ready)	20
16	TD	3
17	RD	2
18,19	Ground (Common)	7

* Denotes RS232 functions typically used when connecting to an external modem instead of a video display terminal.

This option provides the user with extra features, when used with external software, which include:

a) Remote control via on site computer.

b) Remote Control over separate telephone line with an external modem and computer.

c) Monitoring of line usage.

The Call Director's firmware continually outputs the status of the microprocessor ports, which store the current condition of the 1A2 KSU telephone lines connected to the Telemix X. This information allows the user to monitor ringing lines, denotes active lines on the key, and active lines on the Call Director. With the RS232 option, the Call Director also monitors receive serial data to perform control functions just as a control surface would.

SECTION FOUR

OPERATION

4.1 Standard Operation-1 Call Director, 1 Hybrid

In this Telemix X configuration, up to nine telephone lines may be routed to Bus A of the Call Director. Bus A is connected to the hybrid's telephone input and Call Director ON, OFF, and MUTE controls for hybrid #1 are connected.

The Control Surface for operation of a single call director contains an OFF Switch, a HOLD Switch, a CONF (Conference) Switch, a DUMP (AUX) Switch, and individual switches for nine telephone lines.

To select a caller, simply depress the desired line switch. The lamps on the control surface flash on inbound ringing just as on a 10 button telephone set.

To place a caller on HOLD, simply depress the HOLD switch after selecting the appropriate line. Once a caller is on HOLD he may be again placed "on air" by redepressing the corresponding line switch.

To end a conversation with a caller push the OFF switch. This disconnects the caller from the 1A2 Key Service and frees that telephone line to take another call.

To "button mash" conference multiple callers, push the CONF switch. This moves the Call Director into a PUSH-ON, PUSH-OFF mode of operation. In this mode of operation, callers may be disconnected either by redepressing the corresponding line switch, or by pressing the OFF button. If remote talent or guest appears on one of the Telemix X lines, the OFF button should not be used as it disconnects ALL active lines.

CAUTION! Button mash conferencing performance depends on the quality of hybrid used. If caller levels drop significantly on conferencing, or if your operation requires frequent conferencing of callers, it is advisable to add another hybrid to the system. This will provide true conferencing capability and will optimize the performance of the hybrids.

The DUMP switch, if implemented, when depressed will provide auxilary control of digital delays, timers, lamps, etc.

4.2 Standard Operation-1 Call Director, 2 Hybrids

This configuration adds more flexibility to a Telemix X system. With two cross-connected hybrids, master send audio can easily be conferenced with two callers. Consult the operational manuals of the hybrids used for further information on cross-connecting.

Since one Call Director is used in this system, nine telephone lines are controlled via a 9-line Control Surface. Callers are selected by pushing the appropriate line buttons and are disconnected by pushing the OFF switch. A caller can be placed on HOLD by depressing the HOLD switch, and can be reconnected by repressing the line switch.

In "CONF" mode the first caller selected is routed to the hybrid connected to Bus A. Any additional callers are routed to the Bus B hybrid. Additional button mashed telephone lines will be routed to Bus B. This provides for a dedicated "talent" telephone line, allowing remote talent or a guest to be conferenced with other callers. Remember that the OFF switch disconnects ALL active callers; lines should be disconnected in this mode by redepressing the line switches.

The DUMP switch, if used, provides auxiliary control of equipment such as a delay system.

4.3 Standard Operation-2 Call Directors, 1 Hybrid

In this configuration the user can control eighteen telephone lines and selectively route callers from any of those telephone lines to his audio equipment.

This operation, called "Single Bus" when setting option switches, is identical to that of nine line operation using one hybrid.

4.4 Standard Operation-2 Call Directors, 2 Hybrids

Up to 18 lines may be operated with this system, with true conferencing capability. Callers are fielded by depressing the corresponding line switches. They can then be disconnected or saved on the KSU for future use by using the OFF and HOLD switches. Multiple callers can be bridged together on cross-connected hybrids using the PUSH-ON, PUSH-OFF feature of the CONF mode.

4.5 Standard Operation-2 Call Directors, 4 Hybrids

This is the most flexible of the Telemix X systems. In this configuration eighteen telephone lines are available and up to four callers may be effectively conferenced. Again, refer to information in individual hybrid manuals on conference bridges.

This system is still simple to operate. All lines are selected by a press of a single button. A selected line can be dropped by pushing the OFF switch or it can be put on hold by pressing the HOLD switch.

In this fully enabled system, the CONF mode routes two calls on lines 1-9 to hybrids 1 and 2. The first two callers selected on lines 10-18 are routed to hybrids 3 and 4. Additional callers would be routed to hybrids 2 and 4, respectively, depending on the line.

With nine telephone lines paralled to the input of two Call Directors the operation remains the same. Calls selected on the upper bus will be routed to hybrids 1 and 2; calls selected on the lower bus will be routed to hybrids 3 and 4.

4.6 Using Mutes and the DUMP Feature

To make Telemix X more efficent, the ability of controlling hybrids with mute contacts was designed into the system. Most hybrids now available have user initiated receive audio mutes. These hybrids can be wired to the Telemix X Call Directors to allow the operator to mute caller audio by simply depressing the corresponding line switch. This feature prevents connection noises from going on air as well. Refer to Section 3.4 of this manual for more information.

The DUMP or AUX feature on the Telemix X can be implemented in a variety of ways. When depressed, the DUMP function gives the user an open-collector driver to perform any single control function. The main reason it was incorporated is to control audio delay equipment. It can also be used to start timers, auxilary tape equipment, and other studio equipment.

4.7 Producer Interface (Screening Calls)

Screening of calls can be done in several ways. Perhaps the simplest and most inexpensive way is to have someone sit at a separate 10 or 20 button telephone instrument and pick up callers as they ring in. This "producer" can then okay the call for studio use by simply placing the caller on hold. The studio operator then is informed that a holding line has been screened.

Since more than one control surface can be connected to a single Call Director, separate control points (studios) can be used to screen calls by fielding them on audition buses of consoles or other audio equipment. Screened lines can then be verbally or electronically signaled to the "on-air" operator.

4.8 Using the RS232 Option

If an RS232 option is installed in the Master Call Director the added benefits of computerized control are added to the Telemix X system. (Remember that a "Master" Call Director is designated such by option switch selection and single Call Director systems have only a Master Call Director. Dual Call Director systems have a designated Master and a designated Slave Call Director.)

The RS232 option allows control and monitoring via personal computers. Refer to information in the technical section of this manual for data formats sent by the Call Director RS232 option and the required receive data.

SECTION FIVE

TECHNICAL DESCRIPTION

5.1 1A2 Key Service Unit

The 1A2 KSU is an industry standard for commercial use of telephone lines. It is easily recognized by the 25-pair cables running to each extension.

The 1A2 provides the following benefits:

1. Excellent telephone audio quality is delivered to the extensions.

2. Lines in use are reported via monitoring off-hook conditions at individual extensions.

3. Each extension can select, place on hold, and disconnect lines on the key.

4. A power supply provides the energy needed to ring many extensions, amplify audio signals, and other processes.

5. Since telephone company tip-ring pairs are passed directly to each extension, a loss of power doesn't affect the operation of the audio portion of the system, only its supervisory signaling.

6. It is easily maintained because each telephone circuit is connected to the key via a printed circuit card.

7. Audio can be sent to callers on hold easily.

Please refer to the electrical schematics in section seven of this manual during the following discussion.

The Telemix X monitors the 1A2 KSU's lamp and lamp ground connections as a supervisory function. This allows the Telemix X to indicate line usage. The MCA11G1's optocouplers U6-U14 provide switch closures to the processor whenever a line is busy on the key. They also signal an inbound ringing condition which the processor can interrupt and provide control surface indication.

If the user selects a line on the key, MCA11G1's U15-U23 provide a closure on the key's A Common and appropriate A-Lead. This will signal other users of the same telephone lines that that line is in use. To place a line on Hold, the Telemix X simply drops the A-lead and then the T-R pair.

5.2 Call Director Microprocessor Theory

Please refer to the Electricl Schematics in Section 7.0 of this manual during this discussion.

The Telemix X Call Director incorporates a Motorola MC146805E2 Microprocessor. The processor is designated U5 on the schematic and corresponding screening is found on the printed circuit board. This processor has eight address/data lines and two eight bit input/output ports. It will address from 0000h to 1FFFh.

The processor resides in memory from 0000-007Fh. It has two internal I/O ports. One, eight bit port is used for reading of the front panel option switches, and the other monitors the 1A2 lamp circuitry.

The processor is clocked at 2.4576MHz. U44, a 74HC4066, divides the Y1 crystal oscillator down to a 600 Hz timer pulse which is used in monitoring the interrupts the processor needs to service.

U46, a 74HC573 is implemented as an address/data latch. The 27C64, U45, EPROM contains the code needed to execute the operation of the Call Director.

Address decoding is done by U47, a 74HC684 magnitude comparator, and U48, a 74HC138 decoder.

U49, a DS1232 "Watchdog" timer is used for microprocessor reset control. The processor will be reset if the +5VL supply drops below 4.5VDC or if the firmware does not restart the timer within 500mS. The +5VL supply powers the "Logic" circuitry.

The Front Panel Reset switch can be used to reset the microprocessor. It connects to pin #1 of the U49 timer.

5.3 Telephone Line Switching

The Telemix X Call Director simply routes Tip-Ring telephone audio to two output ports. These ports are then connected to hybrids.

This telephone line switching is performed by the microprocessor by using U26, a MC146823 I/O port. To save on required control bits, the microprocessor controls both the drivers for the line relays and the power supply that energizes the relays' coils. Q2, Q3, Q4, and Q5, MJE170 PNP power transistors, are switched on to provide power to the appropriate Tip/Ring Bus. Once this is done Line Relay Drives 1-9 are turned on.

The relays used in the Call Director are Omron G6AK-234P +5 VDC Bi-coil relays. They have two coils to provide a set and reset function, i.e. functions for selecting or deselecting telephone lines.

5.4 Inputs

Each Call Director handles a 9-line 1A2 25-pair trunk, which connects to J2. This trunk contains up to 9 Tip-Ring pairs, A Common and 9 A-leads, 9 sets of Lamps and Lamp Grounds, and Buzzer-Bell connections to the key. These connections are made to the Telemix X via the standard Western-Electric code for 1A2 lines. Refer to section seven in this manual for a chart that shows these functions.

Other inputs to the Call Director come from the Control Surface in the form of closures to ground. MCA11G1's U31-U43 provide isolation between the control surfaces and U50, a MC146823 port. 1N4148 Diodes, CR1-CR13, provide reverse polarity protection. The U50 port monitors the 13 switches connected to it.

5.5 Outputs

Each Call Director switches 9 telephone balanced pairs to two ports, Bus A and Bus B. These appear at the rear panel DB-25 on pins 22-25.

The MC146823 port U50 also provides processor controlled drivers for the lamps on a control surface. These outputs are buffered with 74HC241's and then driven by ULN2803A open-collector drivers. Since the drivers are open-collector, care should be taken in providing current limiting when sinking LED's.

5.6 Power Supply

The Telemix X Call Director's power supply consists of an AC line transformer, 1N4004 rectifers, filter capacitors, and two +5VDC regulators.

The line transformer steps down the AC-line potential to 22 VACrms which is then rectified by CR35 and CR36 to 14 VDC. C19, a 2200 microfarad capacitor, and C20, a .1 microfarad capacitor, filter this rectified signal and feed it to the input of VR2.

VR2, a LM7805K +5VDC regulator, provides power to the K1-K18 relay coils through the MJE170's, the MCA11G1 A-Lead switches, the MCA11G1 optoisolators of the control surface switches, and power to the control surface itself. The +5VDC supply fed to the control surface on Pins 47-50 of J1 is fused with F1.

CR34 further rectifies the AC, and C21 and C22; both 2200 microfarad caps, provide filtering as well as line bump masking for VR1. VR1 is a 78M05C +5VDC regulator. It is used to power the CMOS logic components on board.

5.7 RS232 Option

The Telemix system can be RS232 compatible with the addition of an RS232 option PCB. This board connects to J5. The J5 connector routes the microprocessor A/D bus, the processor control bits, and the power supply to this PCB.

The RS232 option PCB contains four integrated circuits. U1 is a 6116 RAM, U2 a MC6850 UART, U3 is a 74HC00 and is used for address decoding. U4 is a LT1081 RS232 driver.

U44, a 74HC4060 clock divider, is also used to establish the BAUD rate of the RS232 option. A berg jumper can be placed on the appropriate postition of the dual pin strip to establish the desired RXC, and TXC frequencies.

The output data of the RS232 port contains information as to the status of the Call Director(s). It is formatted in the following manner:

RS232 Send Data Stream

Byte	"Name"	Format
1	Sync1	0111000x +--Conference Mode
2	Sync2	11110000
3	LS lamp det.	000xxxxx ||||+--Line 1 Lamp Detect |||+---Line 2 ||+----Line 3 |+-----Line 4 +------Line 5
4	MS lamp det.	0010xxxx |||+--Line 6 Lamp Detect ||+---Line 7 ||+----Line 8 |+-----Line 9
5	Remote LS Lamp Detect	010xxxxx ||||+--Line 10 Lamp Detect |||+---Line 11 ||+----Line 12 |+-----Line 13 +------Line 14
6	Remote MS Lamp Detect	0110xxxx |||+--Line 15 Lamp Detect ||+---Line 16 |+----Line 17 +-----Line 18

RS232 Send Data Stream (Cont.)

Byte	"Name"	Format
7	LS Line Relay Status	100xxxxx ||||+--Line 1 Line Relay Status |||+---Line 2 ||+----Line 3 |+-----Line 4 +------Line 5
8	MS Line Relay Status	1010xxxx |||+--Line 6 Line Relay Status ||+---Line 7 |+----Line 8 +-----Line 9
9	Remote LS Line Relays	110xxxxx ||||+--Line 10 Line Relay Status |||+---Line 11 ||+----Line 12 |+-----Line 13 +------Line 14
10	Remote MS Relay Status	1110xxxx |||+--Line 15 Line Relay Status ||+---Line 16 |+----Line 17 +-----Line 18

Note: The bytes specifying "remote" unit line relay and lamp status contain valid data only when a slave unit is attached. The bytes contain "don't care" data when no slave unit is present.

RS232 command byte sequence

Byte	"Name"	Format
1	Sync1	11111111 = 0FFh
2	Sync2	10101010 = 0AAh
3	Command Bytes	One of the following: 100xxxyy where yy=00 is OFF yy=01 is DUMP xxx is unspecified 001xxxxx is HOLD 010xxxxx is CONFERENCE 011yyyyy is LINE SELECT where yyyyy is the line to select, in the range 1-18. (Binary Coded)

Note: Lines 10 through 18 are only available when a slave call director is attached.

SECTION SIX

MAINTENANCE

6.1 Recommended Spare Parts

The Telemix X system is designed to provide years of trouble free service. No components should fail under normal use. However, it is recommended to have the following parts on hand in case of emergencies.

Qty	Part	GEC Part#	Application
1	MC146805	XXX-146-805	Call Director Microprocessor
2	MC146823	XXX-146-823	Call Director Port IC's
4	MCA11G1	XXX-XXX-XXX	Optoisolators
4	ULN2803A	XXX-XXX-XXX	Open-Collector Drivers
1	.5A Fuse	XXX-XXX-XXX	AC Line Fuse
1	.75A Fuse	XXX-XXX-XXX	Control Surface Fuse

6.2 Troubleshooting Helps

Telemix X is simple to install and maintain. If problems arise in operating the system check the following:

1. Power Supply: Check Output of Regulators for +5VDC.

2. Control Surface Switches and Lamps: Check operation by entering engineering test mode. This is done by depressing the OFF switch and the DUMP switch simultaneously. In this mode of operation each control surface switch closure will give lamp indication on its LED if microprocessor is running. Caution! The only way to exit this mode is to reset the microprocessor in each call director in the system.

3. Microprocessor RESET: Pin #1 of the U5 processor should be HIGH during normal operation. If it isn't, either the timer is signaling that firmware code is not being processed or the front panel reset switch is shorted.

4. Cables: Check for properly mounted connectors.

5. 1A2 Key: If other telephone sets on the key perform erratically with the Telemix off line, then the problem is probably in a line card on the key.

6.3 Gentner Engineering Customer Service

If questions arise in the installation or operation of the Telemix X, please call Gentner Engineering Customer Service in Salt Lake City at (801) 268-1117.

If further technical data is needed on the operation of the Telemix X please call the above number.

SECTION SEVEN

DIAGRAMS

7.1 1A2 9-line Extension Wiring Format

Punch Term	Wire Color	Function	Punch Term	Wire Color	Function
1	WH-BL	T1	26	GN-BL	R5
2	BL-WH	R1	27	BK-GR	A5
3	WH-OR	A1	28	BN-BK	A6
4	OR-WH	A COM	29	BK-SL	LG
5	WH-GN	LG	30	SL-BL	L5
6	GN-WH	L1	31	YL-BL	T6
7	WH-BN	T2	32	BL-YL	R6
8	BN-WH	R2	33	YL-OR	BUZZ COM
9	WH-SL	A2	34	OR-YL	BUZZER
10	SL-WH	A9	35	YL-GN	LG
11	RD-BL	LG	36	GN-YL	L6
12	BL-RD	L2	37	YL-BN	T7
13	RD-OR	T3	38	BN-YL	R7
14	OR-RD	R3	39	YL-SL	BELL
15	RD-GN	A3	40	SL-YL	BELL GND
16	GN-RD	A8	41	VI-BL	LG
17	RD-BN	LG	42	BL-VI	L7
18	BN-RD	L3	43	VI-OR	T8
19	RD-SL	T4	44	OR-VI	R8
20	SL-RD	R4	45	VI-GN	L9
21	BK-BL	A4	46	GN-VI	L9
22	BL-BK	A7	47	VI-BN	LG
23	BK-OR	LG	48	BN-VI	L8
24	OR-BK	L4	49	VI-SL	T9
25	BK-GN	T5	50	SL-VI	R9

7.2 Call Director J1 Control Surface Connections

AMP CONN PIN*	BLOCK PIN	WIRE COLOR	FUNCTION
1	2	WH-BL	HOLD LAMP
2	4	OR-WH	LAMP 9
3	6	GN-WH	CONF LAMP
4	8	BN-WH	LAMP 8
5	10	SL-WH	OFF LAMP
6	12	BL-RD	LAMP 6
7	14	OR-RD	LAMP 7
8	16	GN-RD	LAMP 5
9	18	BN-RD	LAMP 4
10	20	SL-RD	LAMP 3
11	22	BL-BK	LAMP 2
12	24	OR-BK	LAMP 1
13	26	GN-BK	HOLD SWITCH
14	28	BN-BK	CONF SWITCH
15	30	SL-BK	SWITCH 6
16	32	BL-YL	SWITCH 7
17	34	OR-YL	SWITCH 5
18	36	GN-YL	SWITCH 1
19	38	BN-YL	SWITCH 2
20	40	SL-YL	DUMP SWITCH**
21	42	BL-VI	SWITCH 4
22	44	OR-VI	SWITCH 3
23	46	GN-VI	SWITCH 8
24	48	BN-VI	OFF SWITCH
25	50	SL-VI	SWITCH 9
45	39	VI-GN	GROUND
46	41	VI-BL	GROUND
47	43	VI-OR	+5 VDC
48	45	VI-GN	+5 VDC
49	47	VI-BN	+5 VDC
50	49	VI-SL	+5 VDC

* This pin is the number on the Amp connector which is the J1 pin numbers reflected on the schematics.

** When this switch is closed, the DUMP open-collector driver appears on J3 pin #13.

7.3 Dual Call Director Control Block Connenctions

These connections are made on a Gentner Easyterm/66 Block. This block is included in shipments on 18-line control surface models. It has 25-pair connections for the Master Call Director Remote, the Slave Call Director Remote, and 25-pair fanouts for two control surfaces.

BLOCK PIN #	WIRE COLOR	DESCRIPTION	BLOCK PIN #	WIRE COLOR	DESCRIPTION
1	WH-BL	SWITCH 17	26	GN-BK	HOLD SWITCH
2	BL-WH	HOLD LAMP	27	BK-BN	SWITCH 13
3	WH-OR	LAMP 18	28	BN-BK	CONF SWITCH
4	OR-WH	LAMP 9	29	BK-SL	SWITCH 15
5	WH-GN	SWITCH 18	30	SL-BK	SWITCH 6
6	GN-WH	CONF LED	31	YL-BL	SWITCH 16
7	WH-BN	LAMP 17	32	BL-YL	SWITCH 7
8	BN-WH	LAMP 8	33	YL-OR	SWITCH 14
9	WH-SL	NC	34	OR-YL	SWITCH 5
10	SL-WH	OFF LAMP	35	YL-GN	SWITCH 10
11	RD-BL	LAMP 15	36	GN-YL	SWITCH 1
12	BL-RD	LAMP 6	37	YL-BN	SWITCH 11
13	RD-OR	LAMP 16	38	BN-YL	SWITCH 2
14	OR-RD	LAMP 7	39	YL-SL	GROUND
15	RD-GN	LAMP 14	40	SL-YL	DUMP SWITCH
16	GN-RD	LAMP 5	41	VI-BL	GROUND
17	RD-BN	LAMP 13	42	BL-VI	SWITCH 4
18	BN-RD	LAMP 4	43	VI-OR	+5VDC
19	RD-SL	LAMP 12	44	OR-VI	SWITCH 3
20	SL-RD	LAMP 3	45	VI-GN	+5VDC
21	BK-BL	LAMP 11	46	GN-VI	SWITCH 8
22	BL-BK	LAMP 2	47	VI-BN	+5VDC
23	BK-OR	LAMP 10	48	BN-VI	OFF SWITCH
24	OR-BK	LAMP 1	49	VI-SL	+5VDC
25	BK-GN	SWITCH 12	50	SL-VI	SWITCH 9

Notes:

1. LAMPS=LED's
2. Cable from block to master Call Director controls lines 1-9.
3. Cable from block to slave Call Director controls lines 10-18.
4. OFF, HOLD, CONF, and DUMP switches are paralled to both CD's.
5. OFF, HOLD, CONF lamps (LED's), are paralled to both CD's.
6. The DUMP lamp is lit when switch is depressed.
7. When DUMP is pressed the dump output is active on both CD's.

7.4 Call Director J3 AUX Connections

This connections are found on the rear panel J3 DB-25 of each Call Director. When a Call Director is purchased these pins are brought out to Molex connectors.

J3, DB-25 Pinout

Pin #	Function
1,2	NC
3	Serial Data Strobe
4	Serial Data In
5	Serial Data Out
6	Serial Data Valid
7	Hybrid #2 ON
8	Hybrid #1 ON
9	Hybrid #1 OFF
10	Hybrid #1 MUTE
11	Hybrid #2 MUTE
12	Hybrid #2 OFF
13	Auxilary Output (DUMP)
14,15	Data Terminal Ready (RS232 Option ONLY)
16	TD (RS232 Option ONLY)
17	RT (RS232 Option ONLY)
18,19	Ground
20,21	NC
22	Tip Bus A
23	Ring Bus A
24	Tip Bus B
25	Ring Bus B

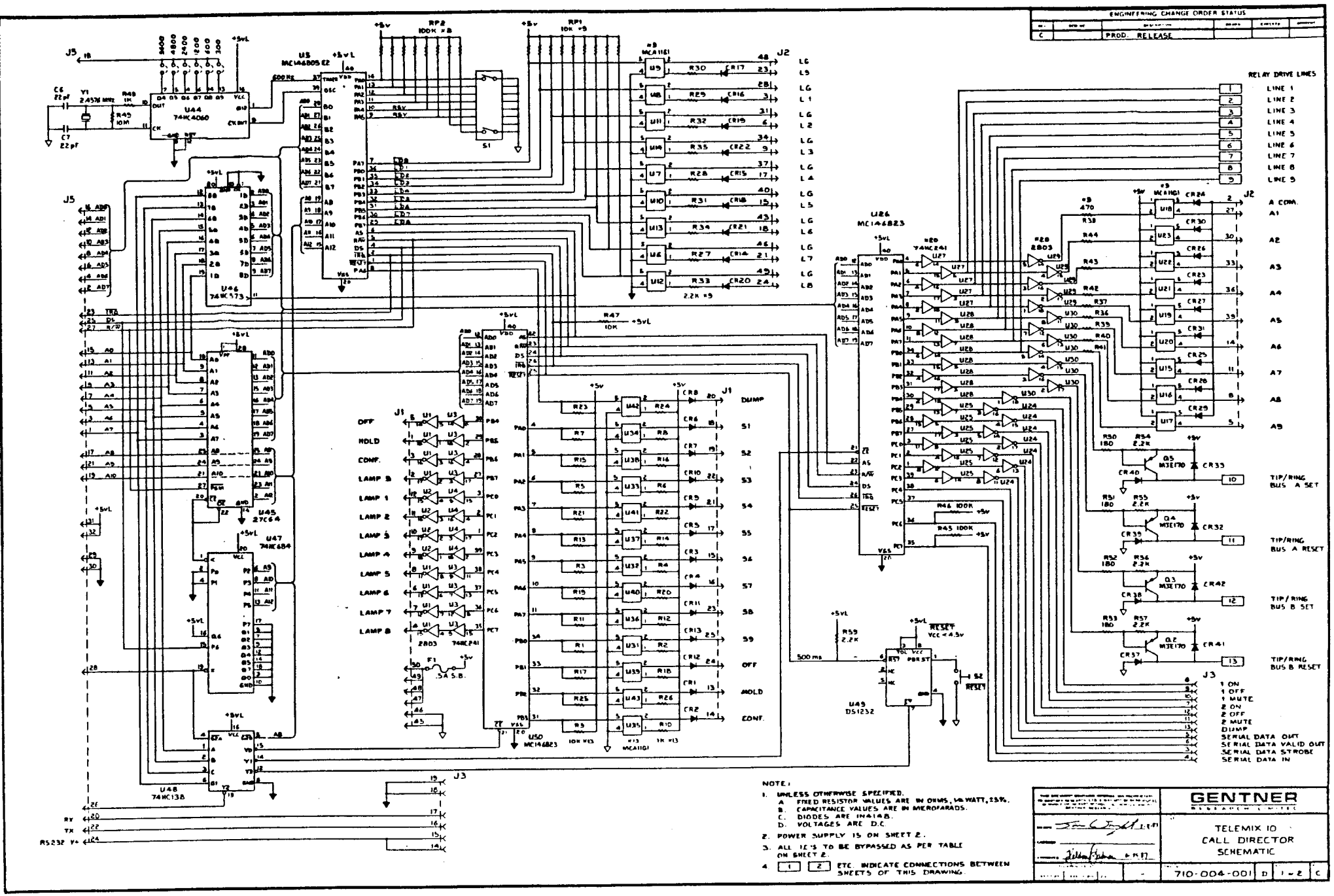
ENGINEERING CHANGE ORDER STATUS
C
PROD. RELEASE
RELAY DRIVE LINES
LINE 1
LINE 2
LINE 3
LINE 4
LINE 5
LINE 6
LINE 7
LINE 8
LINE 9
A COM.
A1
A2
A3
A4
A5
A6
A7
A8
A9
TIP/RING BUS A SET
TIP/RING BUS A RESET
TIP/RING BUS B SET
TIP/RING BUS B RESET
1 ON
1 OFF
1 MUTE
2 ON
2 OFF
2 MUTE
DUMP
SERIAL DATA OUT
SERIAL DATA VALID OUT
SERIAL DATA STROBE
SERIAL DATA IN
U44 74HC4060
U45 27C64
U46 74HC573
U47 74HC684
U48 74HC138
U49 DS1232
U50 MC146823
U26 MC146823
U5 MC146805 E2
RP1 10K ×9
RP2 100K ×8
S1
S2
RESET
J1
J2
J3
J5
OFF
HOLD
CONF.
LAMP 0
LAMP 1
LAMP 2
LAMP 3
LAMP 4
LAMP 5
LAMP 6
LAMP 7
LAMP 8
DUMP
S1
S2
S3
S4
S5
S6
S7
S8
S9
OFF
HOLD
CONF.
RX
TX
RS232 V+
500 ms
NOTE:
1. UNLESS OTHERWISE SPECIFIED.
A. FIXED RESISTOR VALUES ARE IN OHMS, 1/4 WATT, ±5%.
B. CAPACITANCE VALUES ARE IN MICROFARADS.
C. DIODES ARE IN4148.
D. VOLTAGES ARE D.C.
2. POWER SUPPLY IS ON SHEET 2.
3. ALL I.C.'S TO BE BYPASSED AS PER TABLE ON SHEET 2.
4. 1 2 ETC. INDICATE CONNECTIONS BETWEEN SHEETS OF THIS DRAWING.
GENTNER
RESEARCH LIMITED
TELEMIX 10
CALL DIRECTOR
SCHEMATIC
710-004-001
D
1 - 2
C

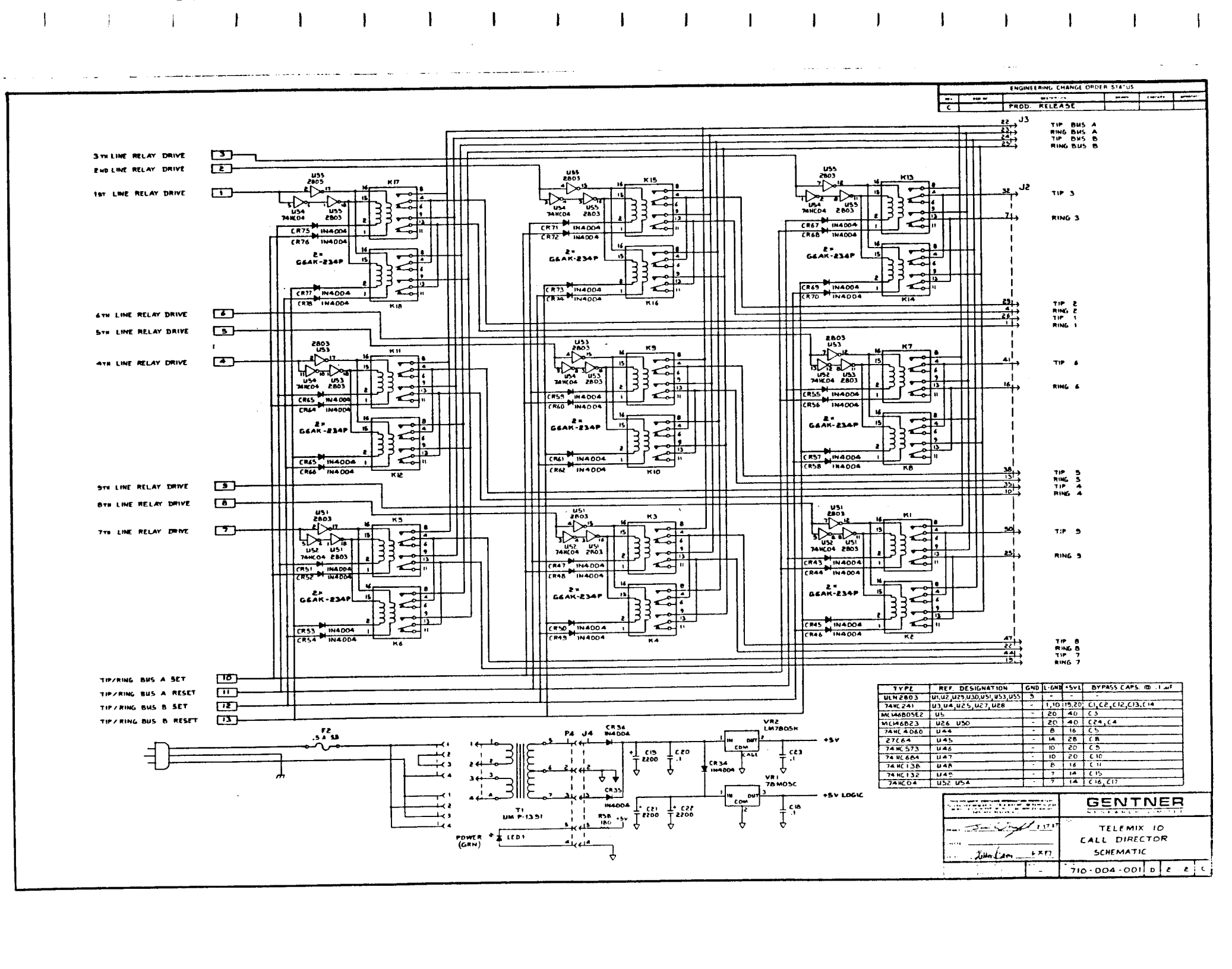

TYPE	REF. DESIGNATION	GND	L-GND	+5VL	BYPASS CAPS @ .1 uF
ULN2803	U1,U2,U29,U30,U51,U53,U55	9	-	-	-
74HC241	U3,U4,U25,U27,U28	-	1,10	19,20	C1,C2,C12,C13,C14
MC14805E2	U5	-	20	40	C3
MCM6823	U26 U50	-	20	40	C24,C4
74HC4060	U44	-	8	16	C5
27C64	U45	-	14	28	C8
74HC573	U46	-	10	20	C9
74HC664	U47	-	10	20	C10
74HC138	U48	-	8	16	C11
74HC132	U49	-	7	14	C15
74HC04	U52 U54	-	7	14	C16,C17

GENTNER

TELEMIX 10
CALL DIRECTOR
SCHEMATIC

710-004-001 D 2 2 C

ENGINEERING CHANGE ORDER STATUS					
REV	ECO NO	DESCRIPTION	DRAWN	CHECKED	APPROVED
B	-	PROD. RELEASE			

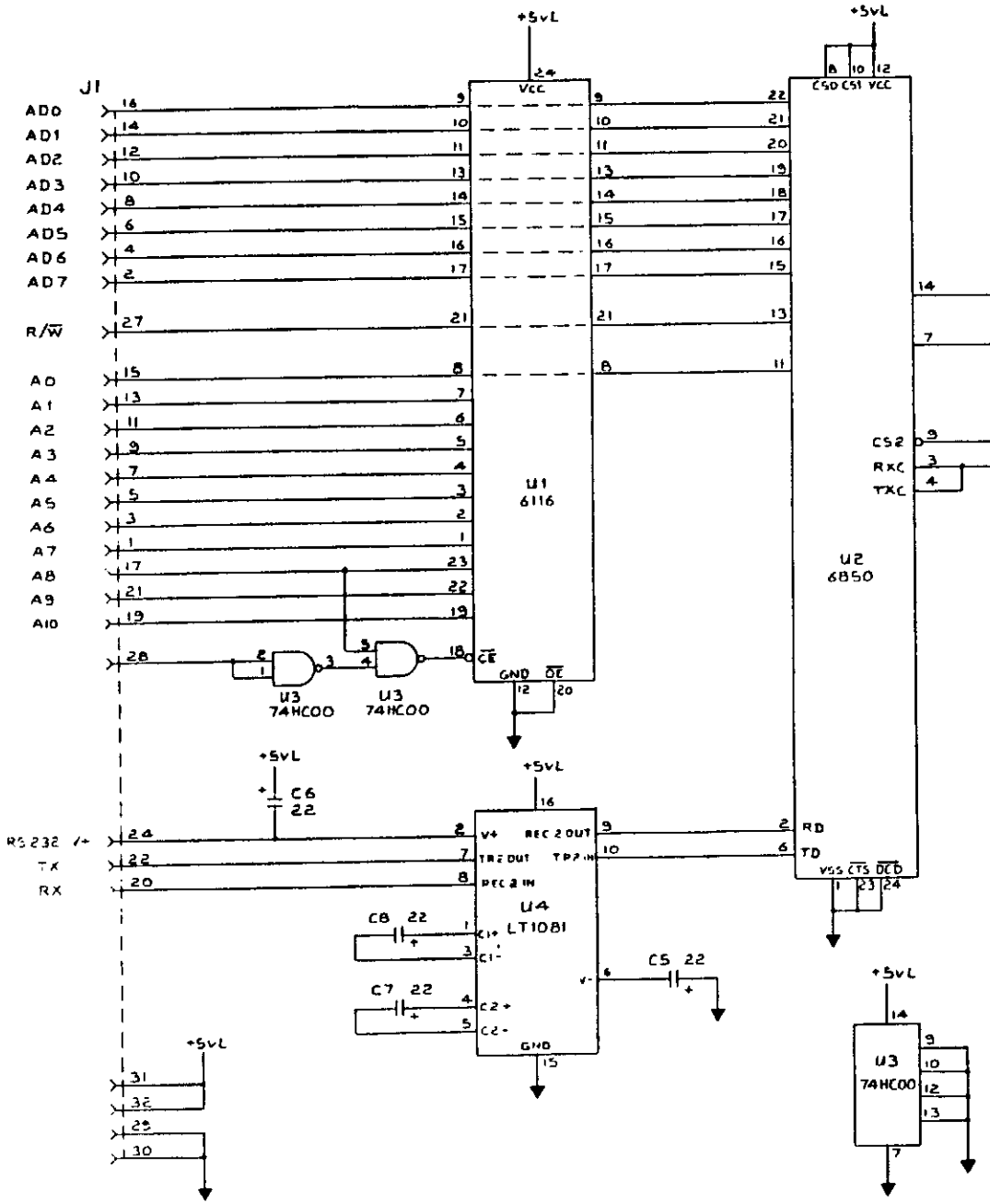

NOTE:

1. UNLESS OTHERWISE SPECIFIED :-
   A. ALL CAPACITOR VALUES ARE IN MICROFARADS.
   B. VOLTAGES ARE D.C.

REF.	TYPE	0.1 μF BYPASS
U1	6116	C1
U2	6850	C2
U3	74HC00	C3
U4	LT1081	C4

THIS DOCUMENT CONTAINS INFORMATION PROPRIETARY TO GENTNER RESEARCH LTD. & MAY NOT BE REPRODUCED IN WHOLE OR IN PART WITHOUT AUTHORIZATION OF GENTNER RESEARCH LTD.

GENTNER RESEARCH LIMITED

DRAWN

CHECKED

APPROVED

TOLERANCES ARE

SCALE -

TITLE: TELEMIX X
CALL DIRECTOR
RS232 OPTION

DWG NO 710-004-002 | SIZE C | SHT 1 of 1 | REV B