035-01-CTM77

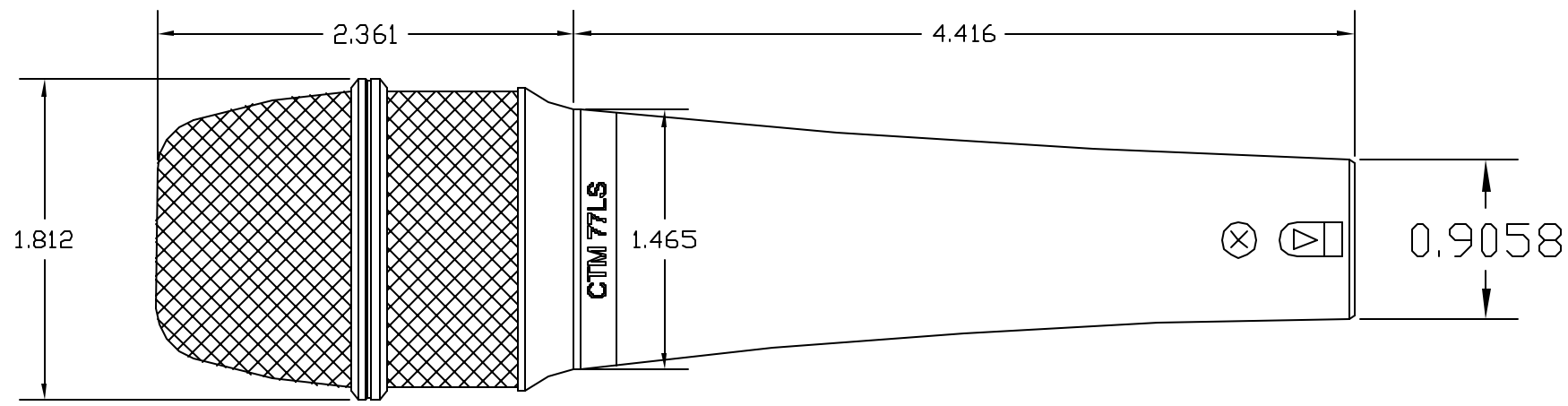

NOTE:
1. CTM 77LS SAME AS CTM 77, WITH EXCEPTION OF SWITCH

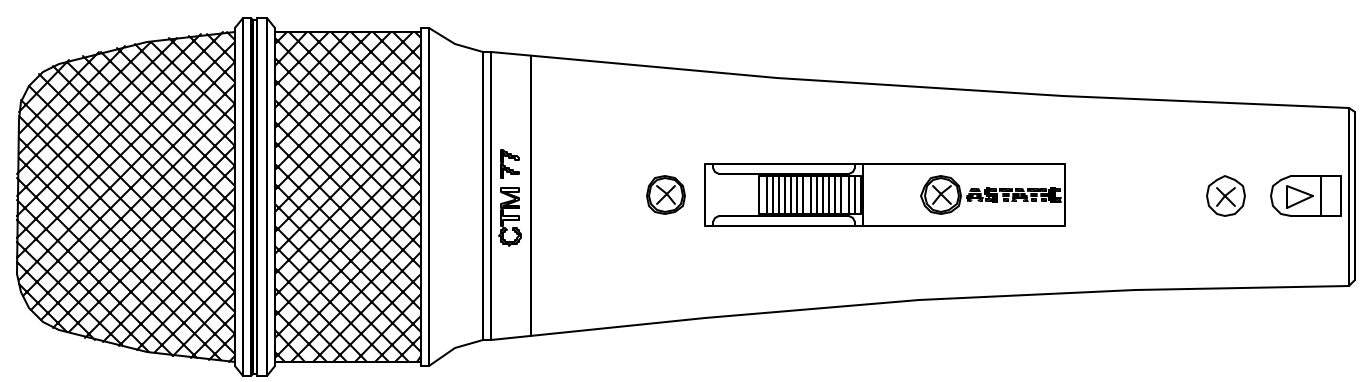

REVISION NO.	DATE	FIRST MADE FOR	MADE_FOR	TITLE
		ASTATIC		CTM77,-77LS
		DRAWN	APPD	DO NOT SCALE DRAWING
		DR		3rd ANGLE PROJ. SIZE B
RELEASE		3-14-05		SCALE NONE / DWG NO. 035-01-CTM77