035-01-CTM33

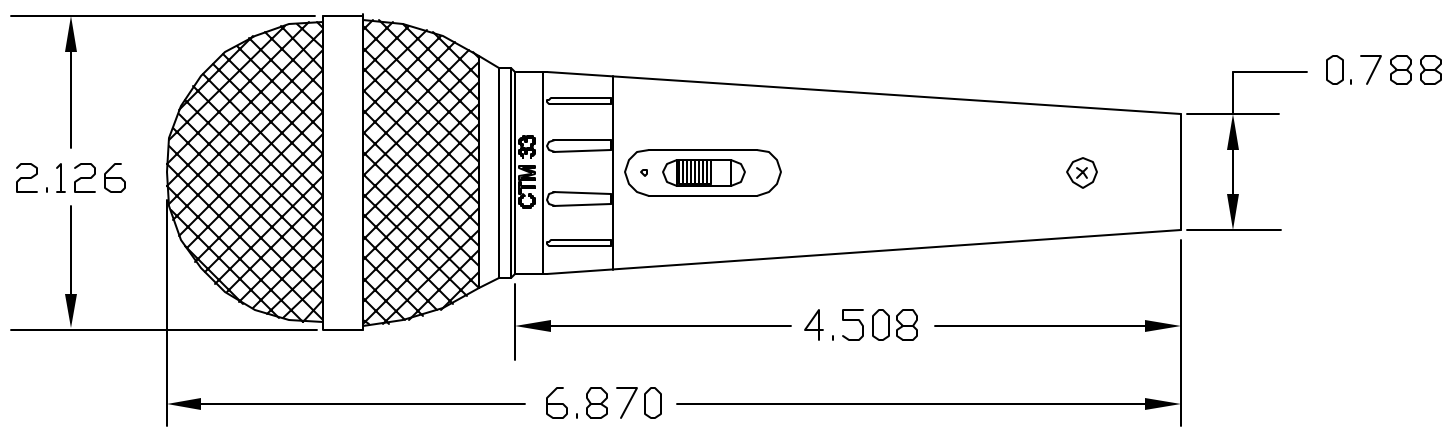

NO. / DATE	FIRST MADE FOR	MADE_FOR	TITLE	
	ASTATIC		CTM_33	
	DRAWN	APPD	DO NOT SCALE DRAWING	
REVISION / RELEASE	3-14-05	3rd ANGLE PROJ. B	SCALE NONE	DWG NO. 035-01-CTM33