035-01-119L

MODEL NO.	GOOSENECK SIZE(DIM "A")
119L	————
119L-13	13"
119L-19	14"

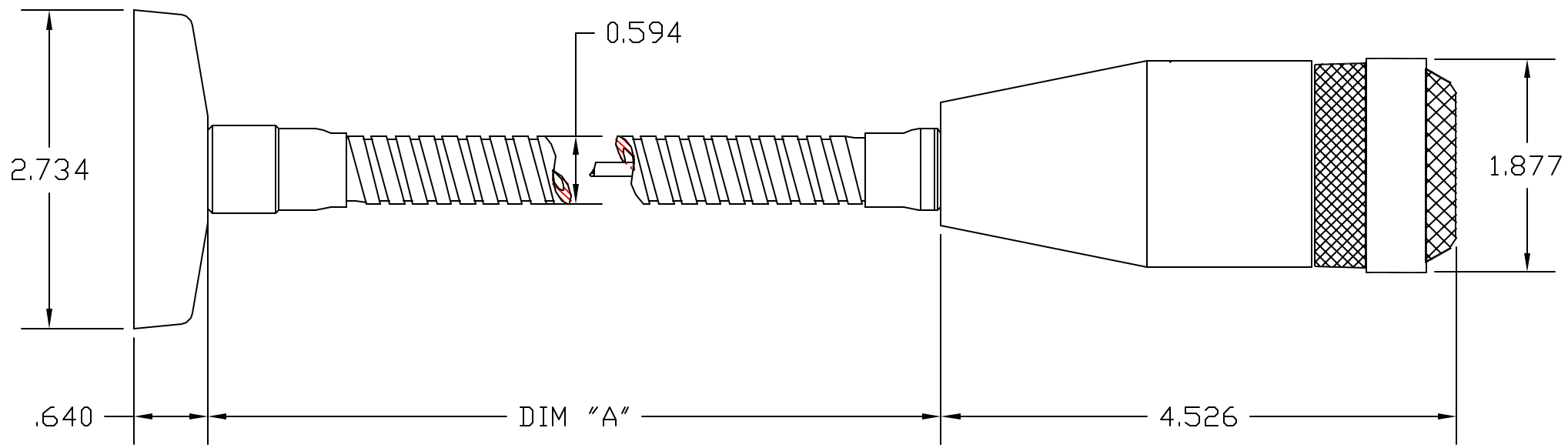

REVISION NO.	DATE	FIRST MADE FOR	MADE_FOR	TITLE
		ASTATIC		119L,-13,-19
		DRAWN	APPD	DO NOT SCALE DRAWING
		DR		3rd ANGLE PROJ. SIZE C
RELEASE		3-10-05		SCALE / DWG NO. 035-01-119L