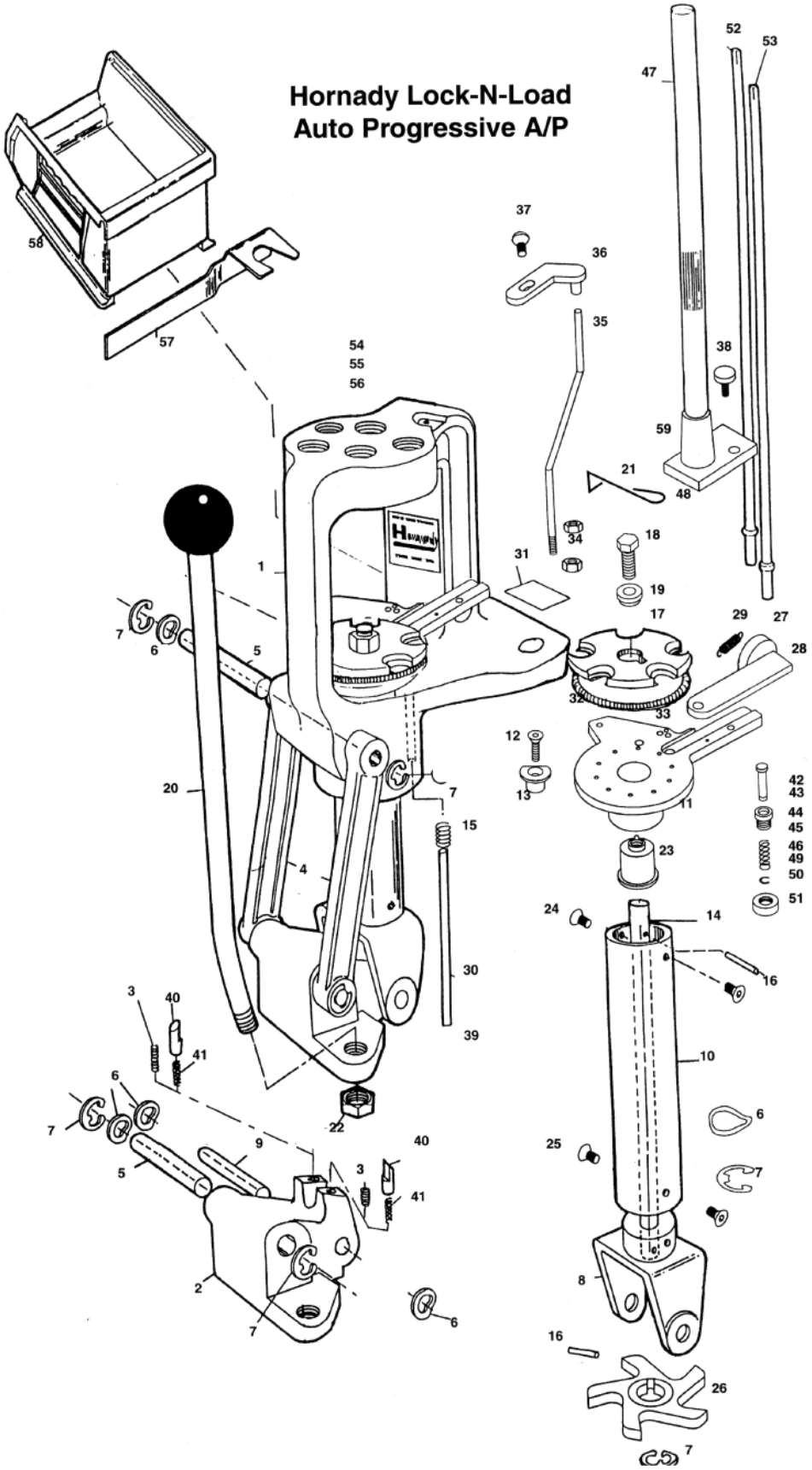
Hornady Lock-N-Load
Auto Progressive A/P