Edition: September 2006
Revision: September 2006
Publication No. SM7E-1N50U0

NISSAN XTERRA

MODEL N50 SERIES

QUICK REFERENCE INDEX

FOREWORD

This manual contains maintenance and repair procedures for the 2007 NISSAN Xterra.

In order to assure your safety and the efficient functioning of the vehicle, this manual should be read thoroughly. It is especially important that the PRECAUTIONS in the GI section be completely understood before starting any repair task.

All information in this manual is based on the latest product information at the time of publication. The right is reserved to make changes in specifications and methods at any time without notice.

IMPORTANT SAFETY NOTICE

The proper performance of service is essential for both the safety of the technician and the efficient functioning of the vehicle.
The service methods in this Service Manual are described in such a manner that the service may be performed safely and accurately.
Service varies with the procedures used, the skills of the technician and the tools and parts available. Accordingly, anyone using service procedures, tools or parts which are not specifically recommended by NISSAN must first be completely satisfied that neither personal safety nor the vehicle's safety will be jeopardized by the service method selected.

NISSAN NORTH AMERICA, INC.
Technical Publications Department

PLEASE HELP MAKE THIS SERVICE MANUAL BETTER!

Your comments are important to NISSAN and will help us to improve our Service Manuals.

Use this form to report any issues or comments you may have regarding our Service Manuals.

Please print this form and type or write your comments below. Mail or fax to:

Nissan North America, Inc.
Technical Service Information
39001 Sunrise Drive, P.O. Box 9200
Farmington Hills, MI USA 48331
FAX: (248) 488-3910

SERVICE MANUAL: Model: _____ **Year:** _____

PUBLICATION NO. (Refer to Quick Reference Index): _____

Please describe any Service Manual issues or problems in detail:

Page number(s) _____ *Note: Please include a copy of each page, marked with your comments.*

_____

_____

_____

_____

_____

_____

_____

Are the trouble diagnosis procedures logical and easy to use? (circle your answer) YES NO

If no, what page number(s)?_____*Note: Please include a copy of each page, marked with your comments.*

Please describe the issue or problem in detail: _____

_____

_____

_____

Is the organization of the manual clear and easy to follow? (circle your answer) YES NO

Please comment: _____

_____

_____

_____

_____

What information should be included in NISSAN Service Manuals to better support you in servicing or repairing customer vehicles?

_____

_____

_____

_____

DATE: _____ YOUR NAME: _____ POSITION: _____

DEALER: _____ DEALER NO.: _____ ADDRESS: _____

CITY:_____ STATE/PROV./COUNTRY: _____ ZIP/POSTAL CODE: _____

QUICK REFERENCE CHART: XTERRA

PFP:00000

Engine Tune-Up Data

ELS0029V

Cylinder arrangement		V-6
Displacement		3,954 cm^3 (241.30 in^3)
Bore and stroke		95.5 × 92.0 mm (3.76 × 3.622 in)
Valve arrangement		DOHC
Firing order		1-2-3-4-5-6
Number of piston rings	Compression	2
	Oil	1
Number of main bearings		4
Compression ratio		9.7:1
Compression pressure	Standard	1,275 kPa (13.0 kg/cm^2 , 185 psi) / 300 rpm
	Minimum	981 kPa (10.0 kg/cm^2 , 142 psi) / 300 rpm
	Differential limit between cylinders	98 kPa (1.0 kg/cm^2 , 14 psi) / 300 rpm
Cylinder number	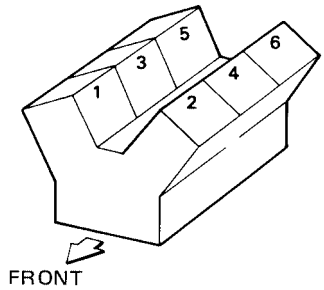 SEM713A	
Valve timing (Intake valve timing control - “OFF”)	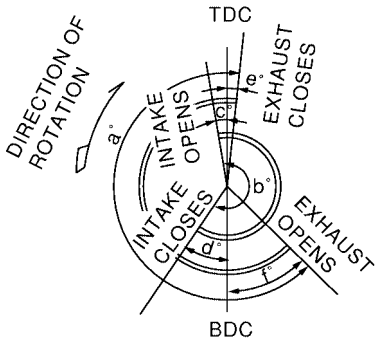 PBIC0187E	

Unit: degree

a	b	c	d	e	f
244°	240°	–4°	64°	6°	58°

Drive Belt Deflection and Tension

Tension of drive belt	Auto adjustment by auto-tensioner

Spark Plugs (Double Platinum Tipped)

Make	NGK
Standard type	PLFR5A-11
Gap (nominal)	1.1 mm (0.043 in)

Wheel Alignment (Unladen*1)*6

ELS0029W

Drive type		2WD	4WD
Camber Degree minute (decimal degree)	Minimum	-0° 30′ (-0.50°)	-0° 15′ (-0.25°)
	Nominal	0° 15′ (0.25°)	0° 30′ (0.50°)
	Maximum	1° 0′ (1.00°)	1° 15′ (1.25°)
	Cross camber	0° 45′ (0.75°) or less	0° 45′ (0.75°) or less
Caster Degree minute (decimal degree)	Minimum	2° 15′ (2.25°)	2° 0′ (2.00°)
	Nominal	3° 0′ (3.00°)	2° 45′ (2.75°)
	Maximum	3° 45′ (3.75°)	3° 30′ (3.50°)
	Cross caster	0° 45′ (0.75°) or less	0° 45′ (0.75°) or less
Kingpin inclination Degree minute (decimal degree)	Nominal	13° 0′ (13.00°)	12° 45′ (12.75°)

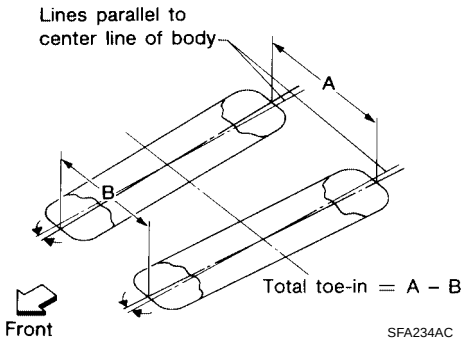

Total toe-in	Distance (A – B)	Minimum	3.0 mm (0.12 in)	3.0 mm (0.12 in)
		Nominal	4.0 mm (0.16 in)	4.0 mm (0.16 in)
		Maximum	5.0 mm (0.20 in)	5.0 mm (0.20 in)
	Angle (left wheel or right wheel) Degree minute (decimal degree)	Minimum	0° 7′ (0.12°)	0° 7′ (0.12°)
		Nominal	0° 9′ (0.15°)	0° 9′ (0.15°)
		Maximum	0° 11′ (0.18°)	0° 11′ (0.18°)
Wheel turning angle (full turn)	Inside Degree minute (Decimal degree)		33° 27′ – 35° 27′ *2 (33.45° – 35.45°)	33° 41′ – 35° 41′ *4 (33.68° – 35.68°)
	Outside Degree minute (Decimal degree)		29° 25′ – 31° 25′ *3 (29.42° – 31.42°)	29° 57′ – 31° 57′ *5 (29.95° – 31.95°)

*1: Fuel, radiator coolant and engine oil full. Spare tire, jack, hand tools and mats in designated positions.
*2: Target value 35° 27′ (35.45°)
*3: Target value 31° 25′ (31.42°)
*4: Target value 35° 41′ (35.68°)
*5: Target value 31° 57′ (31.95°)
*6: Some vehicles may be equipped with straight (non-adjustable) lower link bolts and washers. In order to adjust camber and caster on these vehicles, first replace the lower link bolts and washers with adjustable (cam) bolts and washers.

Wheelarch Height (Unladen*1)

EES001SE

Unit: mm (in)

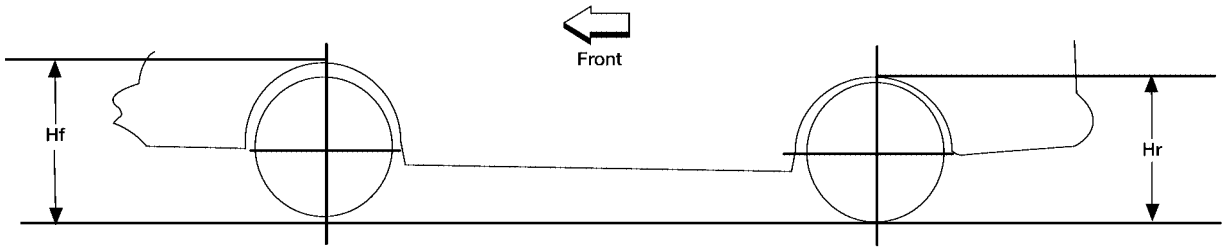

LEIA0085E

Engine type	VQ40DE				
Drive type	2WD		4WD		
Applied models	X and S	SE	X and S	O/R	SE
Tire size	265/70R16	265/65R17	265/70R16	265/75R16	265/65R17
Front wheelarch height (Hf)	839 (33.03)	841 (33.11)	858 (33.78)	870 (34.25)	859 (33.82)
Rear wheelarch height (Hr)	872 (34.33)	872 (34.33)	892 (35.12)	904 (35.59)	892 (35.12)

*1: Fuel, radiator coolant and engine oil full. Spare tire, jack, hand tools and mats in designated positions.

Brake

ELS0029X

Unit: mm (in)

Front brake	Brake model	CLZ33VB
	Rotor outer diameter × thickness	296 × 28 (11.654 × 1.102)
	Pad Length × width × thickness	111.0 × 73.5 × 11.88 (4.73 × 2.894 × 0.468)
	Cylinder bore diameter	51 (2.01)
Rear brake	Brake model	CLZ14VB
	Rotor outer diameter × thickness	286 × 18.0 (11.260 × 0.709)
	Pad Length × width × thickness	83.0 × 33.0 × 11.0 (3.268 × 1.299 × 0.433)
	Cylinder bore diameter	38.1 (1.50)
Control valve	Valve model	Electric brake force distribution
Brake booster	Booster model	C215T
	Diaphragm diameter	215 (8.46)
Recommended brake fluid		Genuine NISSAN Super Heavy Duty Brake Fluid or equivalent, DOT 3 (US FMVSS No. 116)

Disc Brake - Repair Limits

ELS0029Y

FRONT DISC BRAKE

Unit: mm (in)

Brake model		CLZ33VB
Brake pad	Standard thickness (new)	11.88 (0.468)
	Repair limit thickness	2.0 (0.079)
Disc rotor	Standard thickness (new)	28.0 (1.102)
	Repair limit thickness	26.0 (1.024)
	Maximum uneven wear (measured at 8 positions)	0.015 (0.0006)
	Runout limit (with it attached to the vehicle)	0.05 (0.0020)

REAR DISC BRAKE

Brake model		CLZ14VB
Brake pad	Standard thickness (new)	11.0 mm (0.433 in)
	Repair limit thickness	2.0 mm (0.079 in)
Disc rotor	Standard thickness (new)	18.0 mm (0.709 in)
	Repair limit thickness	16.0 mm (0.630 in)
	Maximum uneven wear (measured at 8 positions)	0.015 mm (0.0006 in)
	Runout limit (with it attached to the vehicle)	0.05 mm (0.0020 in)

Brake Pedal

ELS0029Z

Unit: mm (in)

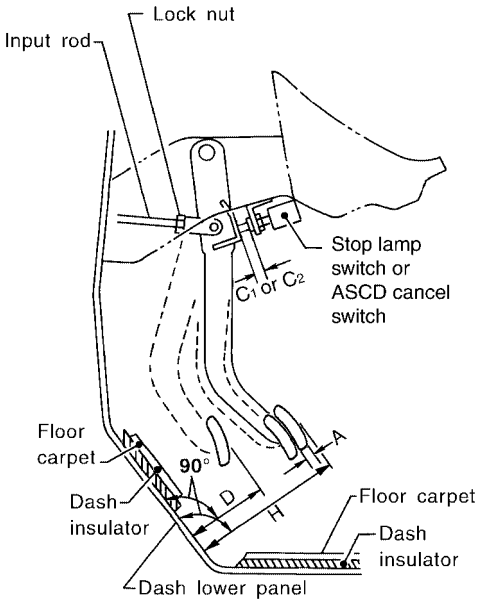

WFIA0160E

Free height "H"	182.1 - 192.1 (7.17 - 7.56)
Depressed pedal height ("D" [under a force of 490 N (50 kg, 110 lb) with engine running]	105 - 115 (4.13 - 4.53)
Clearance between pedal stopper and threaded end of stop lamp switch and ASCD switch "C_1 " or "C_2 "	0.74 - 1.96 (0.029 - 0.077)
Pedal play "A"	3 - 11 (0.12 - 0.43)

Refill Capacities

ELS002A0

Description		Capacity (Approximate)		
		Metric	US measure	Imp measure
Fuel		80 ℓ	21 1/8 gal	17 5/8 gal
Engine oil Drain and refill	With oil filter change	5.1 ℓ	5 3/8 qt	4 1/2 qt
	Without oil filter change	4.8 ℓ	5 1/8 qt	4 1/4 qt
Dry engine (engine overhaul)		6.3 ℓ	6 5/8 qt	5 1/2 qt
Cooling system	With reservoir at MAX level	10.2 ℓ	2 3/4 gal	2 1/4 gal
Automatic transmission fluid (ATF)		10.3 ℓ	10 7/8 qt	9 1/8 qt
Manual transmission fluid (MTF) (6 M/T model)	2WD	3.98 ℓ	8 3/8 pt	7 pt
	4WD	4.18 ℓ	8 7/8 pt	7 3/8 pt

QUICK REFERENCE CHART: XTERRA

2007

Description		Capacity (Approximate)		
		Metric	US measure	Imp measure
Rear final drive oil	C200	1.6 ℓ	3 3/8 pt	2 7/8 pt
	M226	2.01 ℓ	4 1/4 pt	3 1/2 pt
Transfer fluid	TX15B	2.0 ℓ	2 1/8 qt	1 3/4 qt
Front final drive oil		0.85 ℓ	1 3/4 pt	1 1/2 pt
Power steering fluid (PSF)		1.0 ℓ	2 1/8 pt	1 3/4 pt
Windshield washer fluid		4.5 ℓ	1 1/4 gal	1 gal
A/C system refrigerant		0.70 ± 0.05 kg	1.54 ± 0.11 lb	1.54 ± 0.11 lb
A/C system lubricant		180 mℓ	6.1 fl oz	6.3 fl oz