SECTION AT
AUTOMATIC TRANSMISSION

CONTENTS

INDEX FOR DTC

PFP:00024

Alphabetical Index

ECS00CLW

NOTE:
If DTC U1000 is displayed with other DTC, first perform the trouble diagnosis for DTC U1000. Refer to AT-98, "DTC U1000 CAN COMMUNICATION LINE" .

Items (CONSULT- II screen terms)	DTC		Reference page
	OBD- II	Except OBD- II	
	CONSULT- II GST (*1)	CONSULT- II only “A/T”	
A/T 1ST E/BRAKING	—	P1731	AT-138
ATF PRES SW 1/CIRC	—	P1841	AT-160
ATF PRES SW 3/CIRC	—	P1843	AT-162
ATF PRES SW 5/CIRC	—	P1845	AT-164
ATF PRES SW 6/CIRC	—	P1846	AT-166
A/T INTERLOCK	P1730	P1730	AT-135
A/T TCC S/V FNCTN	P0744	P0744	AT-121
ATF TEMP SEN/CIRC	P0710	P1710	AT-128
CAN COMM CIRCUIT	U1000	U1000	AT-98
D/C SOLENOID/CIRC	P1762	P1762	AT-148
D/C SOLENOID FNCTN	P1764 (*2)	P1764	AT-150
ENGINE SPEED SIG	—	P0725	AT-117
FR/B SOLENOID/CIRC	P1757	P1757	AT-144
FR/B SOLENOID FNCT	P1759	P1759	AT-146
HLR/C SOL/CIRC	P1767	P1767	AT-152
HLR/C SOL FNCTN	P1769 (*2)	P1769	AT-154
I/C SOLENOID/CIRC	P1752	P1752	AT-140
I/C SOLENOID FNCTN	P1754 (*2)	P1754	AT-142
L/PRESS SOL/CIRC	P0745	P0745	AT-123
LC/B SOLENOID/CIRC	P1772	P1772	AT-156
LC/B SOLENOID FNCT	P1774	P1774	AT-158
PNP SW/CIRC	P0705	P0705	AT-106
STARTER RELAY/CIRC	—	P0615	AT-101
TCC SOLENOID/CIRC	P0740	P0740	AT-119
TCM	P0700	P0700	AT-105
TP SEN/CIRC A/T	—	P1705	AT-125
TURBINE REV S/CIRC	P07017	P0717	AT-110
VEH SPD SE/CIR·MTR	—	P1721	AT-133
VEH SPD SEN/CIR AT	P0720	P0720	AT-112

*1: These numbers are prescribed by SAE J2012.
*2: These malfunctions cannot be displayed MIL if another malfunction is assigned to MIL.

DTC No. Index

ECS00CLX

NOTE:
If DTC U1000 is displayed with other DTC, first perform the trouble diagnosis for DTC U1000. Refer to AT-98, "DTC U1000 CAN COMMUNICATION LINE" .

DTC		Items (CONSULT- II screen terms)	Reference page
OBD- II	Except OBD- II		
CONSULT- II GST (*1)	CONSULT- II only “A/T”		
—	P0615	STARTER RELAY/CIRC	AT-101
P0700	P0700	TCM	AT-105
P0705	P0705	PNP SW/CIRC	AT-106
P0710	P1710	ATF TEMP SEN/CIRC	AT-128
P0717	P0717	TURBINE REV S/CIRC	AT-110
P0720	P0720	VEH SPD SEN/CIR AT	AT-112
—	P0725	ENGINE SPEED SIG	AT-117
P0740	P0740	TCC SOLENOID/CIRC	AT-119
P0744	P0744	A/T TCC S/V FNCTN	AT-121
P0745	P0745	L/PRESS SOL/CIRC	AT-123
—	P1705	TP SEN/CIRC A/T	AT-125
—	P1721	VEH SPD SE/CIR·MTR	AT-133
P1730	P1730	A/T INTERLOCK	AT-135
—	P1731	A/T 1ST E/BRAKING	AT-138
P1752	P1752	I/C SOLENOID/CIRC	AT-140
P1754 (*2)	P1754	I/C SOLENOID FNCTN	AT-142
P1757	P1757	FR/B SOLENOID/CIRC	AT-144
P1759 (*2)	P1759	FR/B SOLENOID FNCT	AT-146
P1762	P1762	D/C SOLENOID/CIRC	AT-148
P1764 (*2)	P1764	D/C SOLENOID FNCTN	AT-150
P1767	P1767	HLR/C SOL/CIRC	AT-152
P1769	P1769	HLR/C SOL FNCTN	AT-154
P1772	P1772	LC/B SOLENOID/CIRC	AT-156
P1774	P1774	LC/B SOLENOID FNCT	AT-158
—	P1841	ATF PRES SW 1/CIRC	AT-160
—	P1843	ATF PRES SW 3/CIRC	AT-162
—	P1845	ATF PRES SW 5/CIRC	AT-164
—	P1846	ATF PRES SW 6/CIRC	AT-166
U1000	U1000	CAN COMM CIRCUIT	AT-98

*1: These numbers are prescribed by SAE J2012.
*2: These malfunctions cannot be displayed MIL if another malfunction is assigned to MIL.

PRECAUTIONS

PFP:00001

Precautions for Supplemental Restraint System (SRS) “AIR BAG” and “SEAT BELT PRE-TENSIONER”

ECS00CLY

The Supplemental Restraint System such as “AIR BAG” and “SEAT BELT PRE-TENSIONER”, used along with a front seat belt, helps to reduce the risk or severity of injury to the driver and front passenger for certain types of collision. This system includes seat belt switch inputs and dual stage front air bag modules. The SRS system uses the seat belt switches to determine the front air bag deployment, and may only deploy one front air bag, depending on the severity of a collision and whether the front occupants are belted or unbelted.
Information necessary to service the system safely is included in the SRS and SB section of this Service Manual.

WARNING:

- **To avoid rendering the SRS inoperative, which could increase the risk of personal injury or death in the event of a collision which would result in air bag inflation, all maintenance must be performed by an authorized NISSAN/INFINITI dealer.**
- **Improper maintenance, including incorrect removal and installation of the SRS, can lead to personal injury caused by unintentional activation of the system. For removal of Spiral Cable and Air Bag Module, see the SRS section.**
- **Do not use electrical test equipment on any circuit related to the SRS unless instructed to in this Service Manual. SRS wiring harnesses can be identified by yellow and/or orange harnesses or harness connectors.**

Precautions for On Board Diagnostic (OBD) System of A/T and Engine

ECS00CLZ

The ECM has an on board diagnostic system. It will light up the malfunction indicator lamp (MIL) to warn the driver of a malfunction causing emission deterioration.

CAUTION:

- **Be sure to turn the ignition switch “OFF” and disconnect the negative battery cable before any repair or inspection work. The open/short circuit of related switches, sensors, solenoid valves, etc. Will cause the MIL to light up.**
- **Be sure to connect and lock the connectors securely after work. A loose (unlocked) connector will cause the MIL to light up due to an open circuit. (Be sure the connector is free from water, grease, dirt, bent terminals, etc.)**
- **Be sure to route and secure the harnesses properly after work. Interference of the harness with a bracket, etc. May cause the MIL to light up due to a short circuit.**
- **Be sure to connect rubber tubes properly after work. A misconnected or disconnected rubber tube may cause the MIL to light up due to a malfunction of the EGR system or fuel injection system, etc.**
- **Be sure to erase the unnecessary malfunction information (repairs completed) from the TCM and ECM before returning the vehicle to the customer.**

Precautions

ECS00CM0

- **Before connecting or disconnecting the A/T assembly harness connector, turn ignition switch “OFF” and disconnect negative battery cable. Because battery voltage is applied to TCM even if ignition switch is turned “OFF”.**

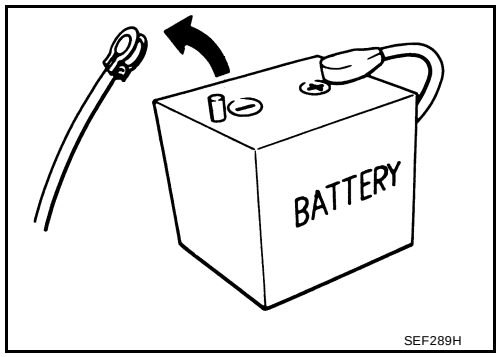

- **After performing each TROUBLE DIAGNOSIS, perform “DTC (Diagnostic Trouble Code) CONFIRMATION PROCEDURE”.**
  If the repair is completed the DTC should not be displayed in the “DTC CONFIRMATION PROCEDURE”.

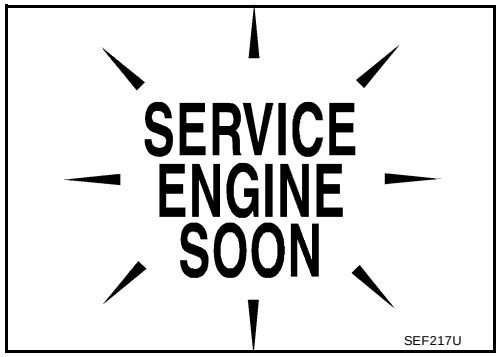

- Always use the specified brand of ATF. Refer to MA-11, "RECOMMENDED FLUIDS AND LUBRICANTS" .
- Use paper rags not cloth rags during work.
- After replacing the ATF, dispose of the waste oil using the methods prescribed by law, ordinance, etc.
- Before proceeding with disassembly, thoroughly clean the outside of the transmission. It is important to prevent the internal parts from becoming contaminated by dirt or other foreign matter.
- Disassembly should be done in a clean work area.
- Use lint-free cloth or towels for wiping parts clean. Common shop rags can leave fibers that could interfere with the operation of the transmission.
- Place disassembled parts in order for easier and proper assembly.
- All parts should be carefully cleaned with a general purpose, non-flammable solvent before inspection or reassembly.
- Gaskets, seals and O-rings should be replaced any time the transmission is disassembled.
- It is very important to perform functional tests whenever they are indicated.
- The valve body contains precision parts and requires extreme care when parts are removed and serviced. Place disassembled valve body parts in order for easier and proper assembly. Care will also prevent springs and small parts from becoming scattered or lost.
- Properly installed valves, sleeves, plugs, etc. will slide along bores in valve body under their own weight.
- Before assembly, apply a coat of recommended ATF to all parts. Apply petroleum jelly to protect O-rings and seals, or hold bearings and washers in place during assembly. Do not use grease.
- Extreme care should be taken to avoid damage to O-rings, seals and gaskets when assembling.
- Clean or replace ATF cooler if excessive foreign material is found in oil pan or clogging strainer. Refer to AT-9, "ATF COOLER SERVICE" .
- After overhaul, refill the transmission with new ATF.
- When the A/T drain plug is removed, only some of the fluid is drained. Old A/T fluid will remain in torque converter and ATF cooling system.
  Always follow the procedures under “Changing A/T Fluid” in the AT section when changing A/T fluid. Refer to AT-13, "A/T FLUID" .

Service Notice or Precautions

ECS00CM1

ATF COOLER SERVICE

If A/T fluid contains frictional material (clutches, bands, etc.), or if an A/T is repaired, overhauled, or replaced, inspect and clean the A/T fluid cooler mounted in the radiator or replace the radiator. Flush cooler lines using cleaning solvent and compressed air after repair. For A/T fluid cooler cleaning procedure, refer to AT-16, "A/T Fluid Cooler Cleaning" . For radiator replacement, refer to CO-14, "Removal and Installation" .

OBD-II SELF-DIAGNOSIS

- A/T self-diagnosis is performed by the TCM in combination with the ECM. Refer to the table on AT-90, "SELF-DIAGNOSTIC RESULT MODE" for the indicator used to display each self-diagnostic result.
- The self-diagnostic results indicated by the MIL are automatically stored in both the ECM and TCM memories.
  Always perform the procedure on AT-41, "HOW TO ERASE DTC" to complete the repair and avoid unnecessary blinking of the MIL.

For details of OBD-II, refer to EC-47, "ON BOARD DIAGNOSTIC (OBD) SYSTEM" .

- **Certain systems and components, especially those related to OBD, may use the new style slide-locking type harness connector. For description and how to disconnect, refer to PG-74, "HARNESS CONNECTOR" .**

PREPARATION

PFP:00002

Special Service Tools

ECS00CM3

The actual shapes of Kent-Moore tools may differ from those of special service tools illustrated here.

Tool number (Kent-Moore No.) Tool name		Description
ST2505S001 (J-34301-C) Oil pressure gauge set 1 ST25051001 (—) Oil pressure gauge 2 ST25052000 (—) Hose 3 ST25053000 (—) Joint pipe 4 ST25054000 (—) Adapter 5 ST25055000 (—) Adapter	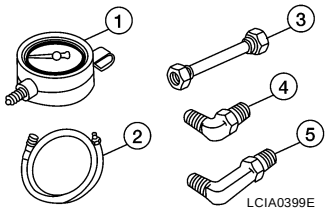	Measuring line pressure
KV31103600 (J-45674) Joint pipe adapter (With ST25054000)	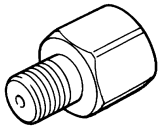	Measuring line pressure
ST33400001 (J-26082) Drift	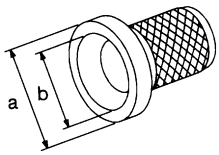	● Installing rear oil seal (2WD models) ● Installing oil pump housing oil seal **a: 60 mm (2.36 in) dia.** **b: 47 mm (1.85 in) dia.**
KV31102400 (J-34285 and J-34285-87) Clutch spring compressor	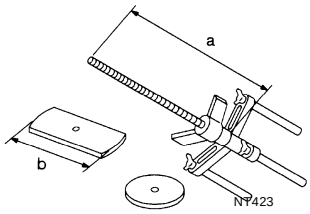	Installing reverse brake return spring retainer **a: 320 mm (12.60 in)** **b: 174 mm (6.85 in)**

Tool number (Kent-Moore No.) Tool name		Description
ST25850000 (J-25721-A) Sliding hammer	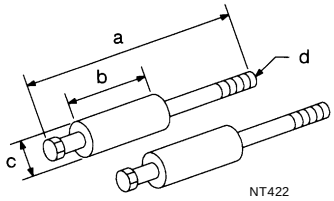	Remove oil pump assembly **a: 179 mm (7.05 in)** **b: 70 mm (2.76 in)** **c: 40 mm (1.57 in)** **d: M12X1.75P**
— (J-47002) Transmission jack adapter kit 1. — (J-47002-1) Center bracket 2. — (J-47002-3) Adapter plate 3. — (J-47002-4) Adapter block	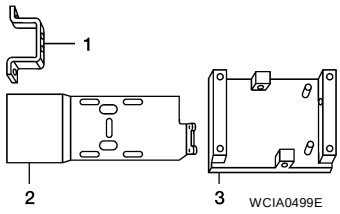	Assist in removal of transmission and transfer case as one assembly using only one transmission jack.

Commercial Service Tools

ECS00CM4

Tool name	Description
Power tool 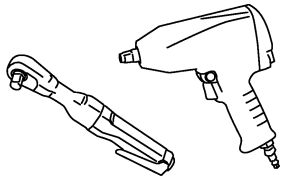 PBIC0190E	Loosening bolts and nuts
Drift 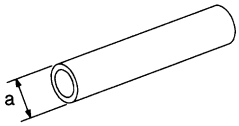 NT083	Installing manual shaft seals **a: 22 mm (0.87 in) dia.**
Drift 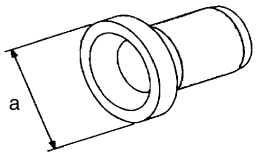 SCIA5338E	Installing rear oil seal (4WD models) **a: 64 mm (2.52 in) dia.**
Pin punch 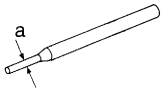 NT410	● Removing retaining pin ● Installing retaining pin **a: 4 mm (0.16 in) dia.**

A/T FLUID

PFP:KLE40

Checking the A/T Fluid (ATF)

ECS00FSK

CAUTION:
If using the vehicle for towing, the A/T fluid must be replaced as specified. Refer to MA-7, "PERIODIC MAINTENANCE" .

1. Before driving, the A/T fluid level can be checked at A/T fluid temperatures of 30° to 50° C (86° to 122° F) using the “COLD” range on the A/T fluid level gauge as follows:

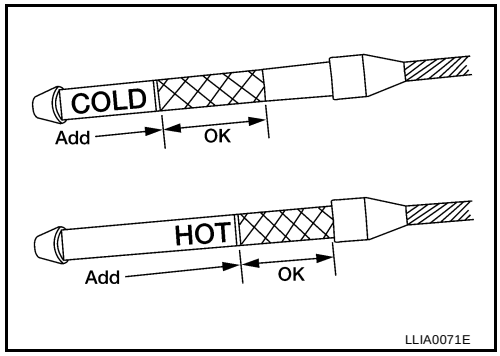

a. Park the vehicle on a level surface and set the parking brake.
b. Start the engine and move the selector lever through each gear position. Shift the selector lever into the “P” position.
c. Check the A/T fluid level with the engine idling.
d. Remove the A/T fluid level gauge and wipe it clean with a lint-free paper.

   CAUTION:
   When wiping the A/T fluid from the A/T fluid level gauge, always use a lint-free paper, not a cloth.

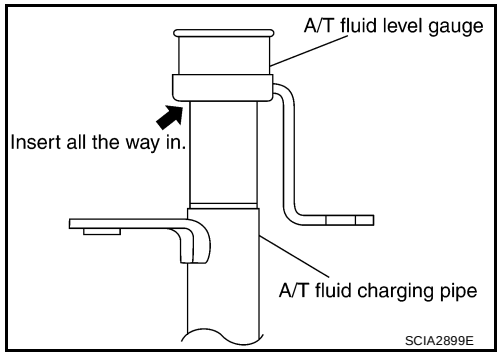

e. Re-insert the A/T fluid level gauge into the A/T fluid charging pipe until the cap contacts the top of the A/T fluid charging pipe as shown.

   CAUTION:
   To check A/T fluid level, insert the A/T fluid level gauge until the cap contacts the top of the A/T fluid charging pipe, with the gauge reversed from the normal inserted position.

f. Remove the A/T fluid level gauge and note the A/T fluid level. If the A/T fluid level is at low side of range, add A/T fluid to the transmission through the A/T fluid charging pipe.

   CAUTION:
   Do not overfill the transmission with A/T fluid.

g. Install the A/T fluid level gauge and the A/T fluid level gauge bolt.

A/T fluid level gauge bolt : Refer to AT-241, "COMPONENTS" for (2WD) or AT-244, "COMPONENTS" for (4WD).

2. Warm up the engine and transmission.
3. Check for any A/T fluid leaks.
4. Drive the vehicle to increase the A/T fluid temperature to 80° C (176° F).

5. Allow the A/T fluid temperature to fall to approximately 65°C (149°F). Use the CONSULT-II to monitor the A/T fluid temperature as follows:

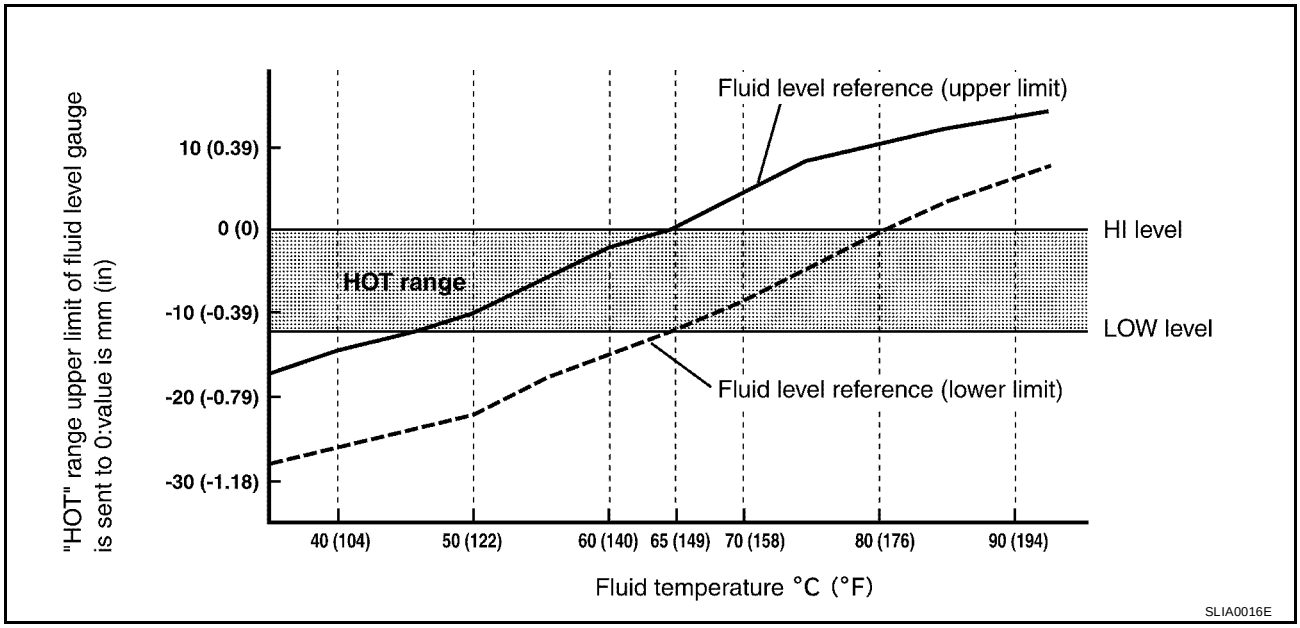

NOTE:
The A/T fluid level will be significantly affected by the A/T fluid temperature as shown. Therefore monitor the A/T fluid temperature data using the CONSULT-II.

a. Connect CONSULT-II to data link connector.
b. Select “MAIN SIGNALS” in “DATA MONITOR” mode for “A/T” with CONSULT-II.
c. Read out the value of “ATF TEMP 1”.

6. Re-check the A/T fluid level at A/T fluid temperatures of approximately 65°C (149°F) using the “HOT” range on the A/T fluid level gauge as shown. The HOT range is between 50° - 80° C (122° - 176° F).

CAUTION:
- **When wiping the A/T fluid from the A/T fluid level gauge, always use lint-free paper, not a cloth.**

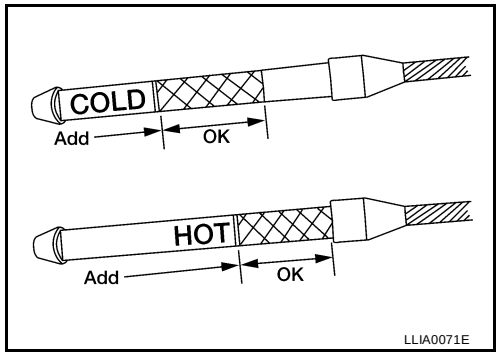

- **To check the A/T fluid level, insert the A/T fluid level gauge until the cap contacts the top of the A/T fluid charging pipe, with the gauge reversed from the normal inserted position as shown.**

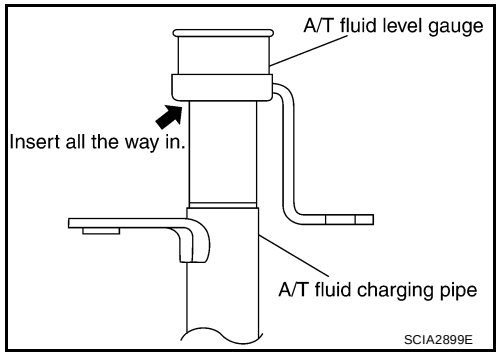

7. Check the A/T fluid condition.
   - If the A/T fluid is very dark or has some burned smell, there may be an internal problem with the transmission. Refer to AT-176, "TROUBLE DIAGNOSIS FOR SYMPTOMS" . Flush the transmission cooling system after repairing the transmission.
   - If the A/T fluid contains frictional material (clutches, bands, etc.), replace the radiator and flush the transmission cooler lines using cleaning solvent and compressed air after repairing the transmission.
8. Install the A/T fluid level gauge in the A/T fluid charging pipe.
9. Tighten the A/T fluid level gauge bolt to specification.

A/T fluid level gauge bolt : Refer to AT-241, "COMPONENTS" for (2WD) or AT-244, "COMPONENTS" for (4WD).

Changing the A/T Fluid (ATF)

ECS00FSL

CAUTION:
If using the vehicle for towing, the A/T fluid must be replaced as specified. Refer to MA-7, "PERIODIC MAINTENANCE" .

1. Drive the vehicle to warm up the A/T fluid to approximately 80° C (176° F).
2. Stop the engine.
3. Remove the A/T fluid level gauge.
4. Drain the A/T fluid from the drain plug hole, then install the drain plug with a new gasket. Refill the transmission with new A/T fluid. Always refill with the same volume as the drained A/T fluid. Use the A/T fluid level gauge to check the A/T fluid level as shown. Add A/T fluid as necessary.

   Drain plug : Refer to AT-247, "Components" .

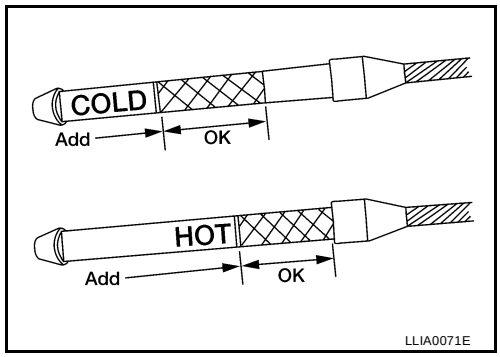

- To flush out the old A/T fluid from the transmission oil coolers, pour new A/T fluid into the A/T fluid charging pipe with the engine idling and at the same time drain the old A/T fluid from the auxiliary transmission oil cooler hose return line.
- When the color of the A/T fluid coming out of the auxiliary transmission oil cooler hose return line is about the same as the color of the new A/T fluid, flushing out the old A/T fluid is complete. The amount of new A/T fluid used for flushing should be 30% to 50% of the specified capacity.

A/T fluid grade and capacity : Refer to MA-11, "Fluids and Lubricants" .

CAUTION:
- **Use only Genuine NISSAN Matic J ATF and do not mix with other fluids.**
- **Using A/T fluid other than Genuine NISSAN Matic J ATF will cause deterioration in driveability and automatic transmission durability, and may damage the automatic transmission, which is not covered by the warranty.**
- **When filling the transmission with A/T fluid, do not spill the A/T fluid on any heat generating parts such as the exhaust manifold.**
- **Do not reuse the drain plug gasket.**

5. Install the A/T fluid level gauge and tighten the A/T fluid level gauge bolt to specification.

   A/T fluid level gauge bolt : Refer to AT-241, "COMPONENTS" for (2WD) or AT-244, "COMPONENTS" for (4WD).

6. Drive the vehicle to warm up the A/T fluid to approximately 80° C (176° F).
7. Check the fluid level and condition. If the A/T fluid is still dirty, repeat steps 2 through 6.

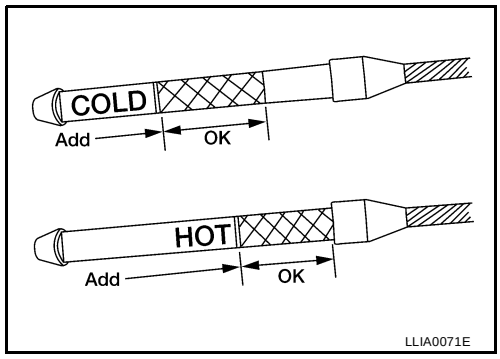

8. Install the A/T fluid level gauge in the A/T fluid charging pipe and install the A/T fluid level gauge bolt.

9. Tighten the A/T fluid level gauge bolt to specification.

A/T fluid level gauge bolt : Refer to AT-241, "COMPONENTS" for (2WD) or AT-244, "COMPONENTS" for (4WD).

A/T Fluid Cooler Cleaning

ECS00EEL

Whenever an A/T is repaired, overhauled, or replaced, the A/T fluid cooler mounted in the radiator must be inspected and cleaned.
Metal debris and friction material, if present, can become trapped in the A/T fluid cooler. This debris can contaminate the newly serviced A/T or, in severe cases, can block or restrict the flow of A/T fluid. In either case, malfunction of the newly serviced A/T may result.
Debris, if present, may build up as A/T fluid enters the cooler inlet. It will be necessary to back flush the cooler through the cooler outlet in order to flush out any built up debris.

A/T FLUID COOLER CLEANING PROCEDURE

1. Position a drain pan under the A/T inlet and outlet fluid cooler tube to cooler hose connection.
2. Put a different color matching mark on each cooler tube to cooler hose connection to aid in assembly.

   CAUTION:
   Use paint to make the matching mark. Do not damage the tubes or hose.
3. Disconnect the fluid cooler inlet and outlet rubber hoses from the steel cooler tubes.

   NOTE:
   Replace the cooler hoses if rubber material from the hose remains on the tube fitting.
4. Drain any A/T fluid from the cooler hose.

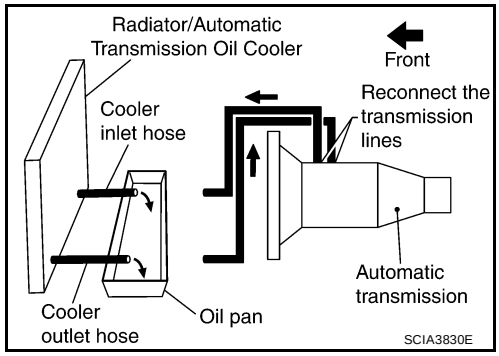

5. Insert the extension adapter hose of a can of Transmission Cooler Cleaner (Nissan P/N 999MP-AM006) into the cooler outlet hose.

   CAUTION:
   - **Wear safety glasses and rubber gloves when spraying the Transmission Cooler Cleaner.**
   - **Spray cooler cleaner only with adequate ventilation.**
   - **Avoid contact with eyes and skin.**
   - **Do not breath vapors or spray mist.**
6. Hold the hose and can as high as possible and spray Transmission Cooler Cleaner in a continuous stream into the cooler outlet hose until fluid flows out of the cooler inlet hose for 5 seconds.
7. Insert the tip of an air gun into the end of the cooler outlet hose.
8. Wrap a shop rag around the tip of the air gun and the cooler outlet hose.

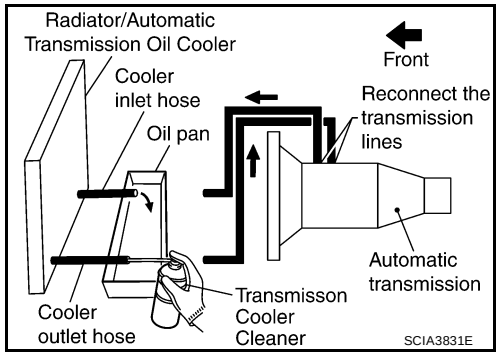

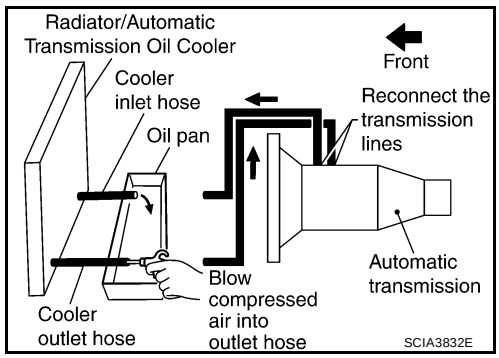

9. Blow compressed air regulated to 5 - 9 kg/cm^2 (70 - 130 psi) through the cooler outlet hose for 10 seconds to force out any remaining fluid.

10. Repeat steps 5 through 9 three additional times.
11. Position an oil pan under the banjo bolts that connect the fluid cooler tubes to the A/T.
12. Remove the banjo bolts.
13. Flush each steel line from the cooler side back toward the A/T by spraying Transmission Cooler Cleaner in a continuous stream for 5 seconds.
14. Blow compressed air regulated to 5 - 9 kg/cm^2 (70 - 130 psi) through each steel line from the cooler side back toward the A/T for 10 seconds to force out any remaining fluid.
15. Ensure all debris is removed from the steel cooler lines.
16. Ensure all debris is removed from the banjo bolts and fittings.
17. Perform AT-17, "A/T FLUID COOLER DIAGNOSIS PROCEDURE" .

A/T FLUID COOLER DIAGNOSIS PROCEDURE

NOTE:
Insufficient cleaning of the cooler inlet hose exterior may lead to inaccurate debris identification.

1. Position a drain pan under the A/T inlet and outlet fluid cooler tube to cooler hose connection.
2. Clean the exterior and tip of the cooler inlet hose.
3. Put a different color matching mark on each cooler tube to cooler hose connection to aid in assembly.

   CAUTION:
   Use paint to make the matching mark. Do not damage the tubes or hose.
4. Disconnect the fluid cooler inlet and outlet rubber hoses from the steel cooler tubes.

   NOTE:
   Replace the cooler hoses if rubber material from the hose remains on the tube fitting.

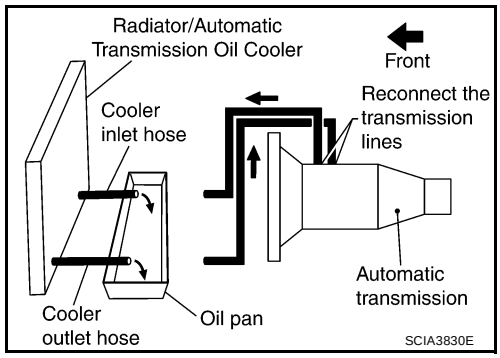

5. Insert the extension adapter hose of a can of Transmission Cooler Cleaner (Nissan P/N 999MP-AM006) into the cooler outlet hose.

   CAUTION:
   - **Wear safety glasses and rubber gloves when spraying the Transmission Cooler Cleaner.**
   - **Spray cooler cleaner only with adequate ventilation.**
   - **Avoid contact with eyes and skin.**
   - **Do not breath vapors or spray mist.**
6. Hold the hose and can as high as possible and spray Transmission Cooler Cleaner in a continuous stream into the cooler outlet hose until fluid flows out of the cooler inlet hose for 5 seconds.
7. Tie a common white, basket-type coffee filter to the end of the cooler inlet hose.

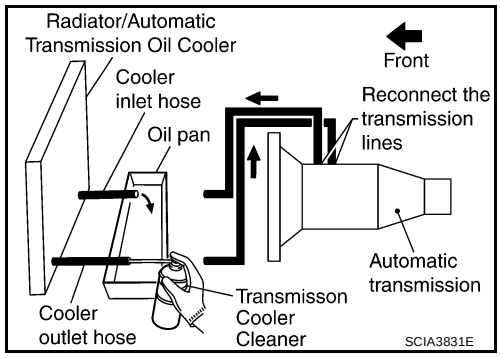

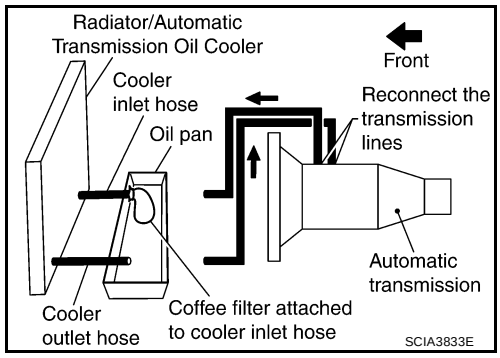

8. Insert the tip of an air gun into the end of the cooler outlet hose.
9. Wrap a shop rag around the air gun tip and end of cooler outlet hose.
10. Blow compressed air regulated to 5 - 9 kg/cm^2 (70 - 130 psi) through the cooler outlet hose to force any remaining A/T fluid into the coffee filter.
11. Remove the coffee filter from the end of the cooler inlet hose.
12. Perform A/T fluid cooler inspection. Refer to AT-18, "A/T FLUID COOLER INSPECTION PROCEDURE" .

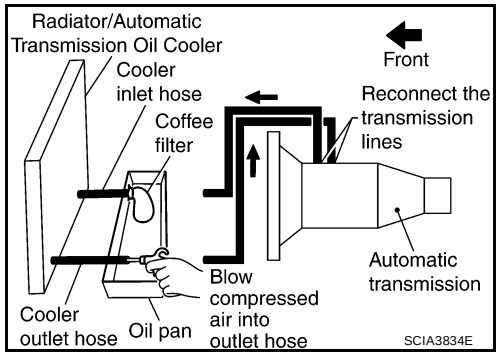

A/T FLUID COOLER INSPECTION PROCEDURE

1. Inspect the coffee filter for debris.

a. If small metal debris less than 1mm (0.040 in) in size or metal powder is found in the coffee filter, this is normal. If normal debris is found, the A/T fluid cooler/radiator can be re-used and the procedure is ended.

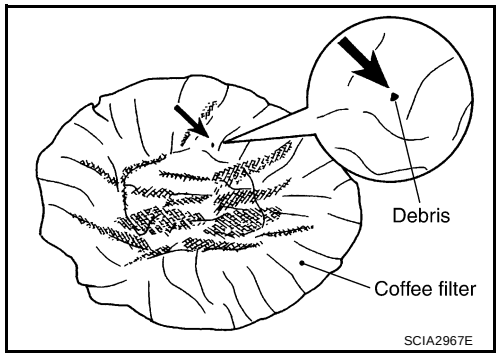

b. If one or more pieces of debris are found that are over 1mm (0.040 in) in size and/or peeled clutch facing material is found in the coffee filter, the fluid cooler is not serviceable. The A/T fluid cooler/radiator must be replaced and the inspection procedure is ended. Refer to CO-14, "RADIATOR" .

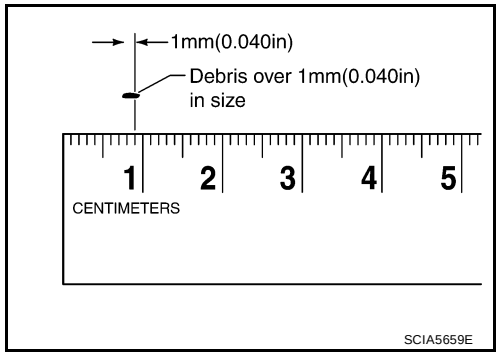

A/T FLUID COOLER FINAL INSPECTION

After performing all procedures, ensure that all remaining oil is cleaned from all components.

A/T CONTROL SYSTEM

PFP:31036

Cross-Sectional View

ECS00CM8

2WD models

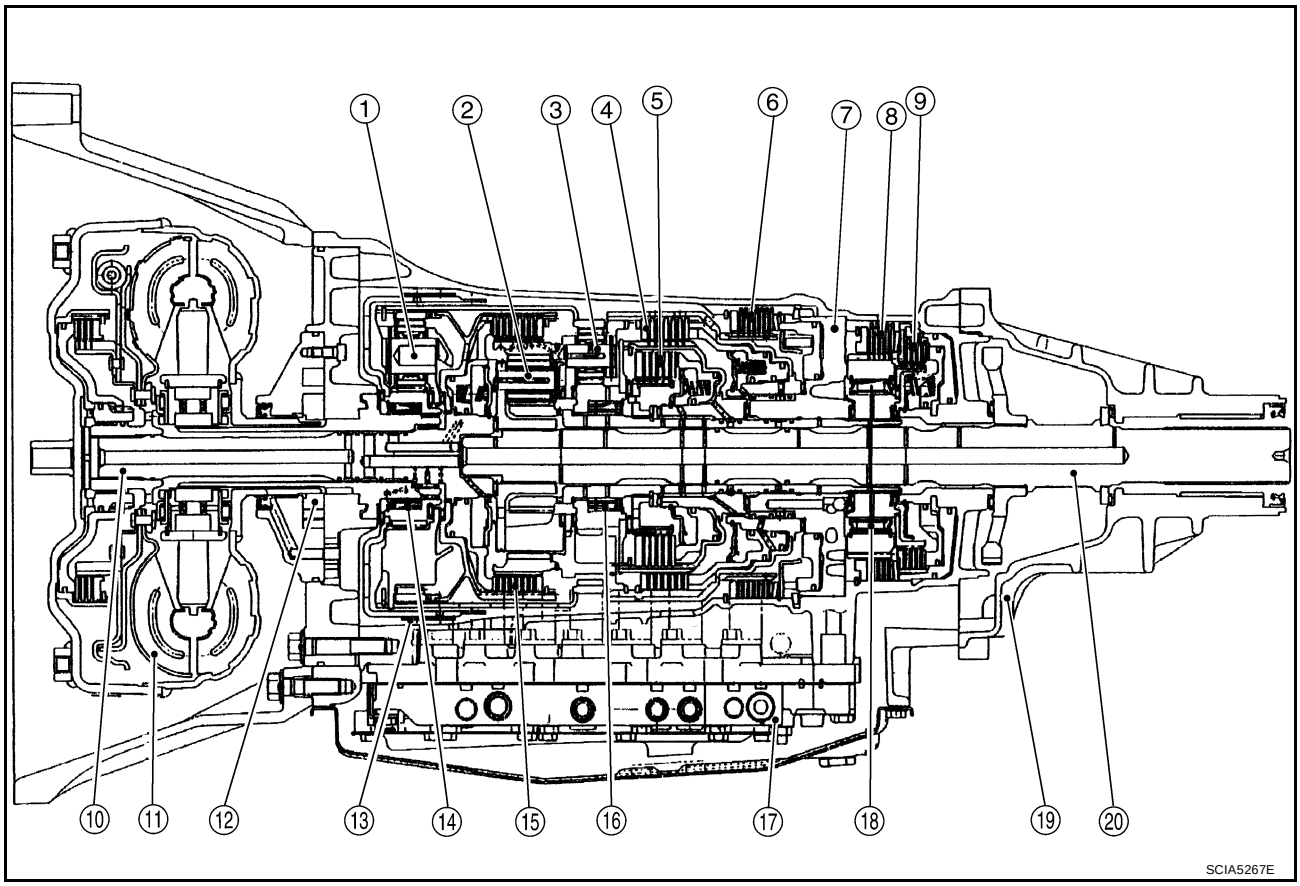

1.	Front planetary gear	2.	Mid planetary gear	3.	Rear planetary gear
4.	Direct clutch	5.	High and low reverse clutch	6.	Reverse brake
7.	Drum support	8.	Forward brake	9.	Low coast brake
10.	Input shaft	11.	Torque converter	12.	Oil pump
13.	Front brake	14.	3rd one-way clutch	15.	Input clutch
16.	1st one-way clutch	17.	Control valve with TCM	18.	Forward one-way clutch
19.	Rear extension	20.	Output shaft		

4WD models

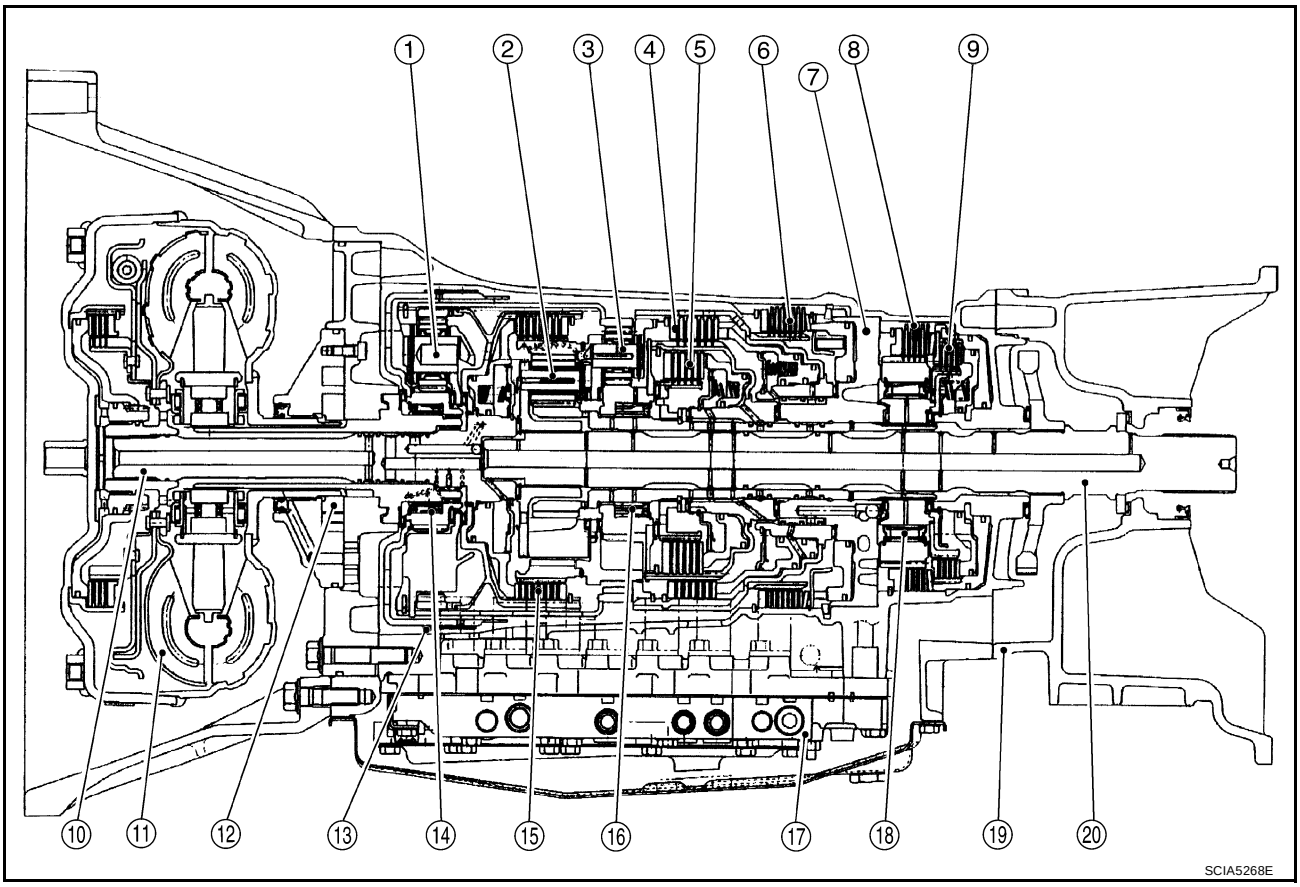

1. Front planetary gear
2. Mid planetary gear
3. Rear planetary gear
4. Direct clutch
5. High and low reverse clutch
6. Reverse brake
7. Drum support
8. Forward brake
9. Low coast brake
10. Input shaft
11. Torque converter
12. Oil pump
13. Front brake
14. 3rd one-way clutch
15. Input clutch
16. 1st one-way clutch
17. Control valve with TCM
18. Forward one-way clutch
19. Adapter case
20. Output shaft

Shift Mechanism

ECS00CM9

The automatic transmission uses compact triple planetary gear systems to improve power-transmission efficiency, simplify construction and reduce weight.
It also employs an optimum shift control and super wide gear ratios. They improve starting performance and acceleration during medium and high-speed operation.

CONSTRUCTION

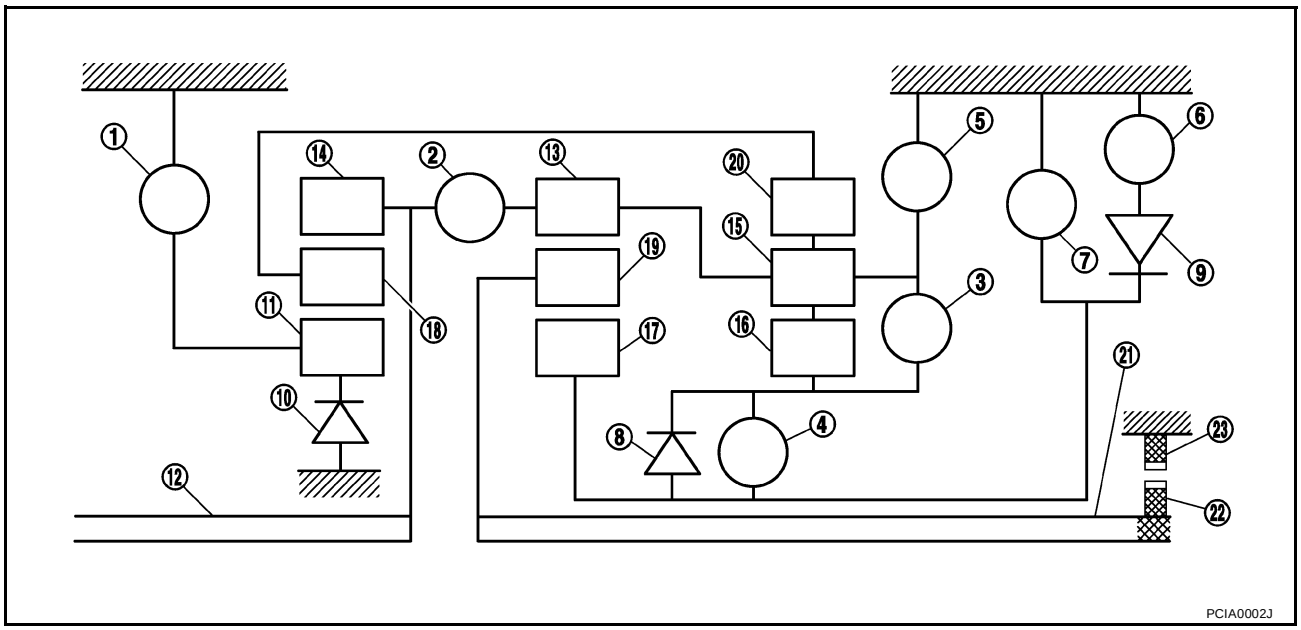

1. Front brake	2. Input clutch	3. Direct clutch
4. High and low reverse clutch	5. Reverse brake	6. Forward brake
7. Low coast brake	8. 1st one-way clutch	9. Forward one-way clutch
10. 3rd one-way clutch	11. Front sun gear	12. Input shaft
13. Mid internal gear	14. Front internal gear	15. Rear carrier
16. Rear sun gear	17. Mid sun gear	18. Front carrier
19. Mid carrier	20. Rear internal gear	21. Output shaft
22. Parking gear	23. Parking pawl	

FUNCTION OF CLUTCH AND BRAKE

Name of the Part	Abbreviation	Function
Front brake (1)	FR/B	Fastens the front sun gear (11).
Input clutch (2)	I/C	Connects the input shaft (12), the front internal gear (14) and the mid internal gear (13).
Direct clutch (3)	D/C	Connects the rear carrier (15) and the rear sun gear (16).
High and low reverse clutch (4)	HLR/C	Connects the mid sun gear (17) and the rear sun gear (16).
Reverse brake (5)	R/B	Fastens the rear carrier (15).
Forward brake (6)	Fwd/B	Fastens the mid sun gear (17).
Low coast brake (7)	LC/B	Fastens the mid sun gear (17).
1st one-way clutch (8)	1st WOC	Allows the rear sun gear (16) to turn freely forward relative to the mid sun gear (17) but fastens it for reverse rotation.
Forward one-way clutch (9)	Fwd OWC	Allows the mid sun gear (17) to turn freely in the forward direction but fastens it for reverse rotation.
3rd one-way clutch (10)	3rd OWC	Allows the front sun gear (11) to turn freely in the forward direction but fastens it for reverse rotation.

CLUTCH AND BAND CHART

Shift position		I/C	HLR/C	D/C	R/B	FR/B	LC/B	Fwd/B	1st OWC	Fwd OWC	3rd OWC	Remarks
P			△			△						PARK POSITION
R			○		○	○			☆		☆	REVERSE POSITION
N			△			△						NEUTRAL POSITION
D*1	1st		△✱			△	△✱✱	○	☆	☆	☆	Automatic shift 1⇔2⇔3⇔4⇔5
	2nd			○		△		○		☆	☆	
	3rd		○	○		○		△	★		☆	
	4th	○	○	○				△	★			
	5th	○	○			○		△	★		★	
3	1st		△✱			△	△✱✱	○	☆	☆	☆	Automatic shift 1⇔2⇔3⇐4
	2nd			○		△		○		☆	☆	
	3rd		○	○		○		△	★		☆	
	4th	○	○	○				△	★			
2	1st		△✱			△	△✱✱	○	☆	☆	☆	Automatic shift 1⇔2⇐3⇐4
	2nd			○		○	○	○		☆	☆	
	3rd		○	○		○		△	★		☆	
	4th	○	○	○				△	★			
1	1st		○			○	○	○	☆	☆	☆	Locks (held stationary in 1st gear) 1⇐2⇐3⇐4
	2nd			○		○	○	○		☆	☆	
	3rd		○	○		○		△	★		☆	
	4th	○	○	○				△	★			

- ○—Operates
- ☆—Operates during “progressive” acceleration.
- ★—Operates and effects power transmission while coasting.
- △—Line pressure is applied but does not affect power transmission.
- △✱—Operates under conditions shown in HLR/C Operating Condition
- △✱✱—Operates under conditions shown in LC/B Operating Condition. Delay control is applied during D (4,3,2,1) ⇒N shift.
- *1: A/T will not shift to 5th when overdrive control switch is set in “OFF” position.

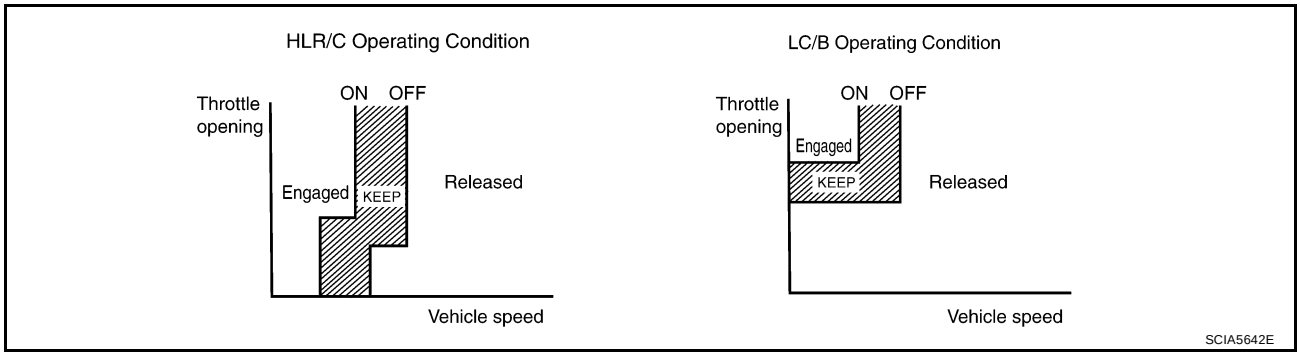

POWER TRANSMISSION

"N" Position

Since both the forward brake and the reverse brake are released, torque from the input shaft drive is not transmitted to the output shaft.

"P" Position

- The same as for the "N" position, both the forward brake and the reverse brake are released, so torque from the input shaft drive is not transmitted to the output shaft.
- The parking pawl linked with the select lever meshes with the parking gear and fastens the output shaft mechanically.

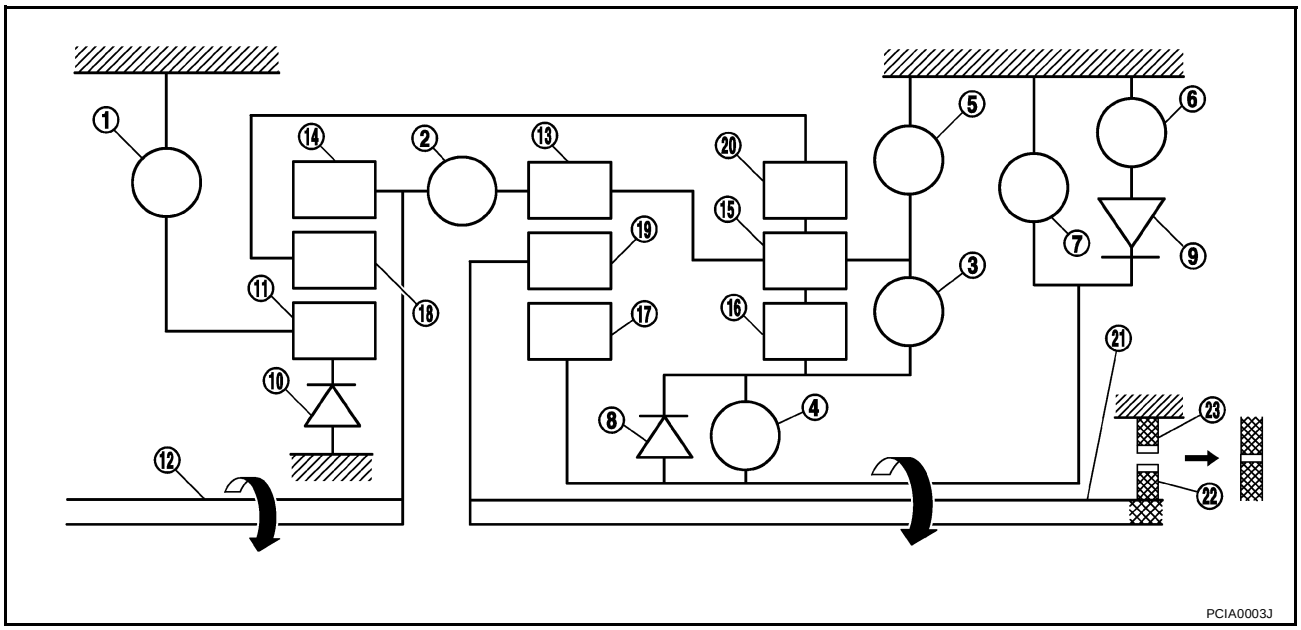

1. Front brake	2. Input clutch	3. Direct clutch
4. High and low reverse clutch	5. Reverse brake	6. Forward brake
7. Low coast brake	8. 1st one-way clutch	9. Forward one-way clutch
10. 3rd one-way clutch	11. Front sun gear	12. Input shaft
13. Mid internal gear	14. Front internal gear	15. Rear carrier
16. Rear sun gear	17. Mid sun gear	18. Front carrier
19. Mid carrier	20. Rear internal gear	21. Output shaft
22. Parking gear	23. Parking pawl	

"D", "3" and "2" Positions 1st Gear

- The forward brake and the forward one-way clutch regulate reverse rotation of the mid sun gear.
- The 1st one-way clutch regulates reverse rotation of the rear sun gear.
- The 3rd one-way clutch regulates reverse rotation of the front sun gear.
- During deceleration, the mid sun gear turns forward, so the forward one-way clutch idles and the engine brake is not activated.

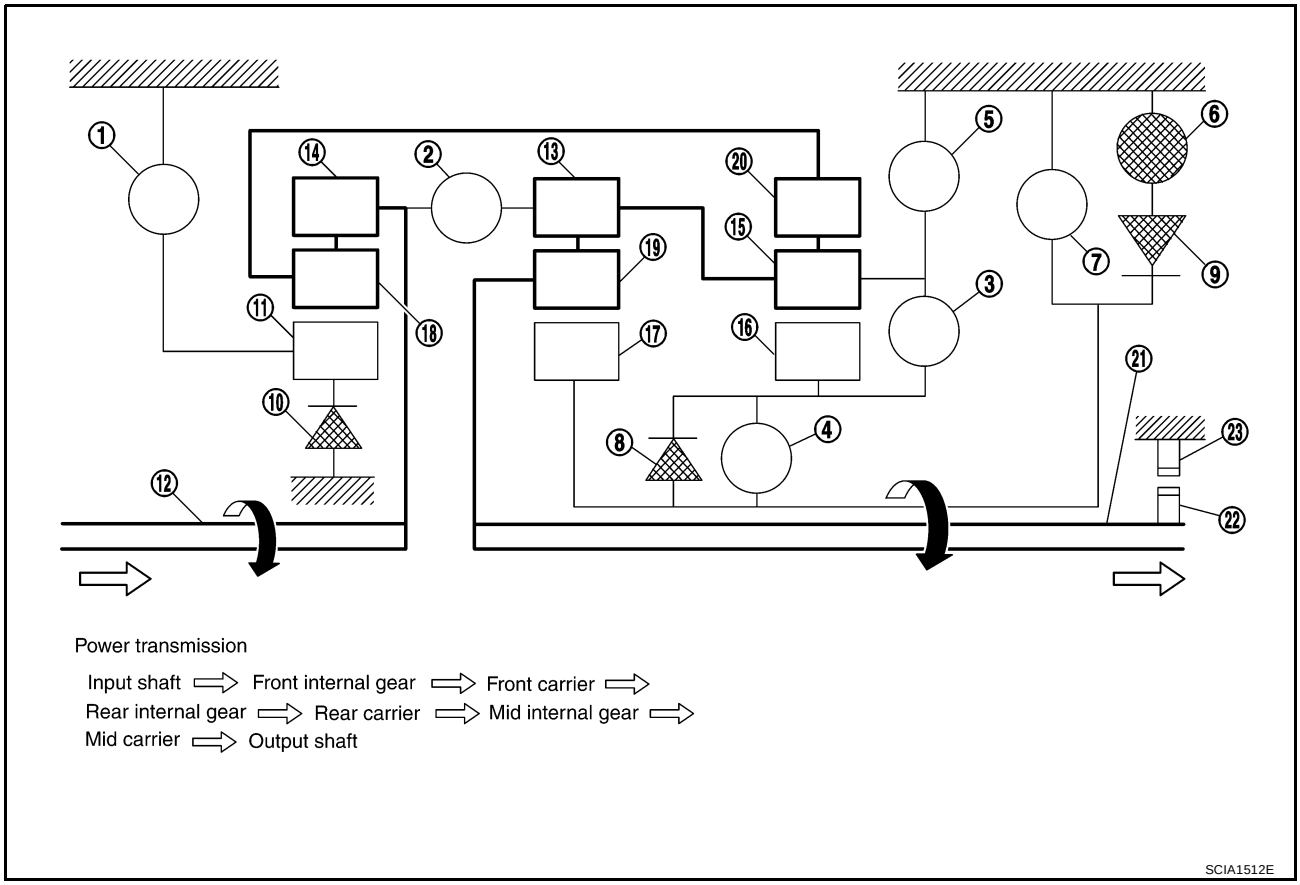

1.	Front brake	2.	Input clutch	3.	Direct clutch
4.	High and low reverse clutch	5.	Reverse brake	6.	Forward brake
7.	Low coast brake	8.	1st one-way clutch	9.	Forward one-way clutch
10.	3rd one-way clutch	11.	Front sun gear	12.	Input shaft
13.	Mid internal gear	14.	Front internal gear	15.	Rear carrier
16.	Rear sun gear	17.	Mid sun gear	18.	Front carrier
19.	Mid carrier	20.	Rear internal gear	21.	Output shaft
22.	Parking gear	23.	Parking pawl		

“1 ” Position 1st Gear

- The front brake fastens the front sun gear.
- The forward brake and the forward one-way clutch regulate reverse rotation of the mid sun gear.
- High and low reverse clutch connects the rear sun gear and the mid sun gear.
- The low coast brake fastens the mid sun gear.
- During deceleration, the low coast brake regulates forward rotation of the mid sun gear and the engine brake functions.

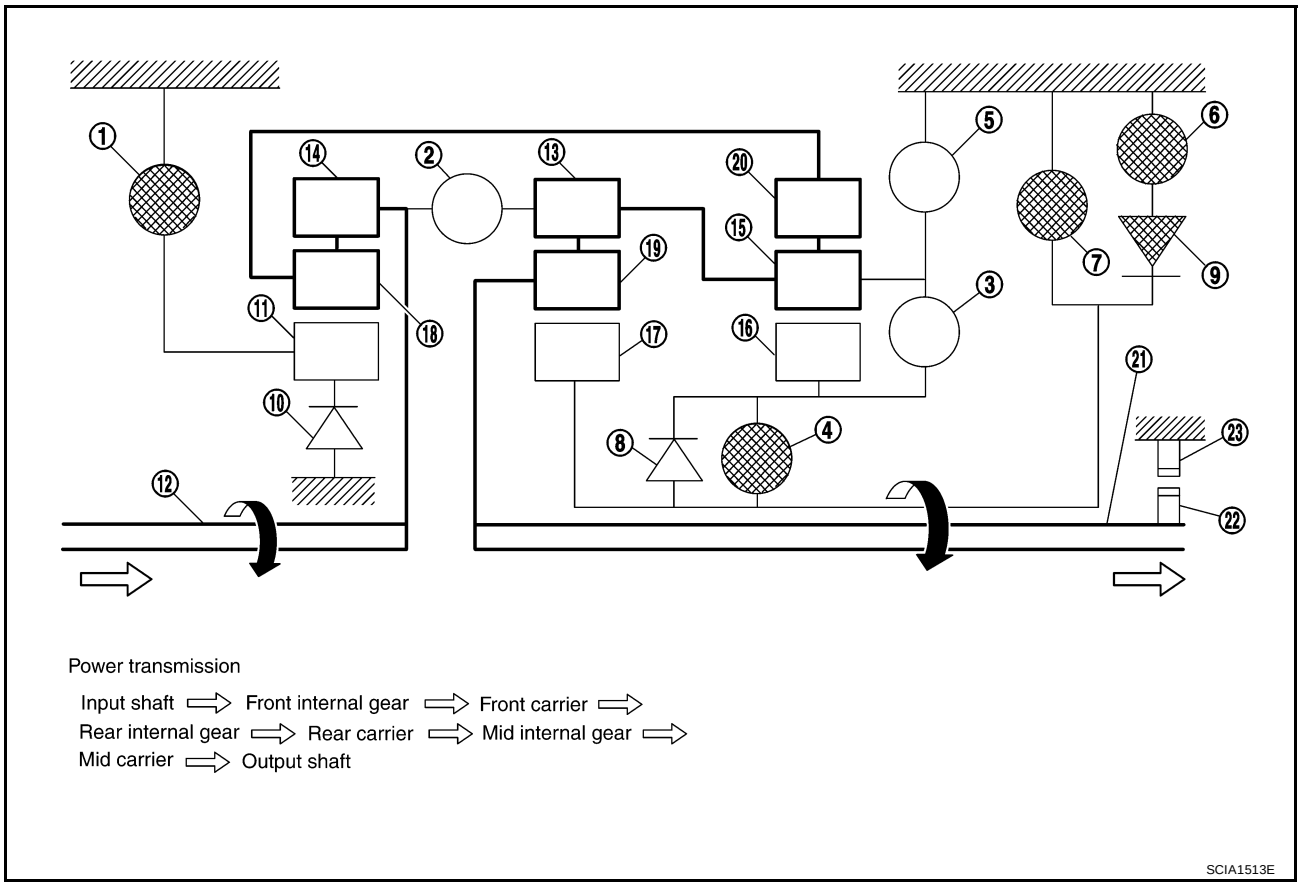

1.	Front brake	2.	Input clutch	3.	Direct clutch
4.	High and low reverse clutch	5.	Reverse brake	6.	Forward brake
7.	Low coast brake	8.	1st one-way clutch	9.	Forward one-way clutch
10.	3rd one-way clutch	11.	Front sun gear	12.	Input shaft
13.	Mid internal gear	14.	Front internal gear	15.	Rear carrier
16.	Rear sun gear	17.	Mid sun gear	18.	Front carrier
19.	Mid carrier	20.	Rear internal gear	21.	Output shaft
22.	Parking gear	23.	Parking pawl		

"D" and "3" Positions 2nd Gear

- The forward brake and the forward one-way clutch regulate reverse rotation of the mid sun gear.
- The 3rd one-way clutch regulates reverse rotation of the front sun gear.
- The direct clutch is coupled and the rear carrier and rear sun gear are connected.
- During deceleration, the mid sun gear turns forward, so the forward one-way clutch idles and engine brake is not activated.

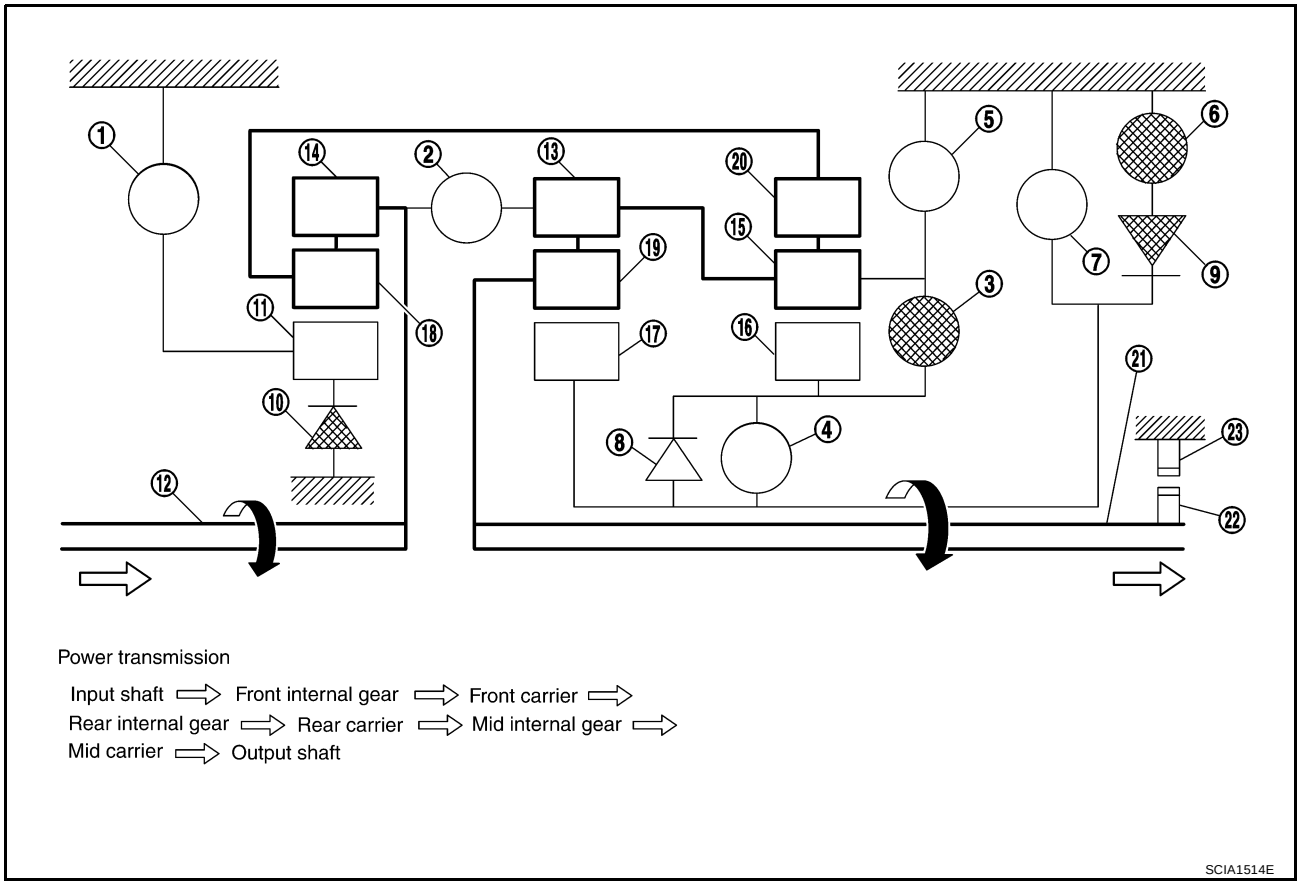

1.	Front brake	2.	Input clutch	3.	Direct clutch
4.	High and low reverse clutch	5.	Reverse brake	6.	Forward brake
7.	Low coast brake	8.	1st one-way clutch	9.	Forward one-way clutch
10.	3rd one-way clutch	11.	Front sun gear	12.	Input shaft
13.	Mid internal gear	14.	Front internal gear	15.	Rear carrier
16.	Rear sun gear	17.	Mid sun gear	18.	Front carrier
19.	Mid carrier	20.	Rear internal gear	21.	Output shaft
22.	Parking gear	23.	Parking pawl		

“2” and “1” Positions 2nd Gear

- The front brake fastens the front sun gear.
- The forward brake and the forward one-way clutch regulate reverse rotation of the mid sun gear.
- The direct clutch is coupled, and the rear carrier and rear sun gear are connected.
- The low coast brake fastens the mid sun gear.
- During deceleration, the low coast brake regulates forward rotation of the mid sun gear and the engine brake functions.

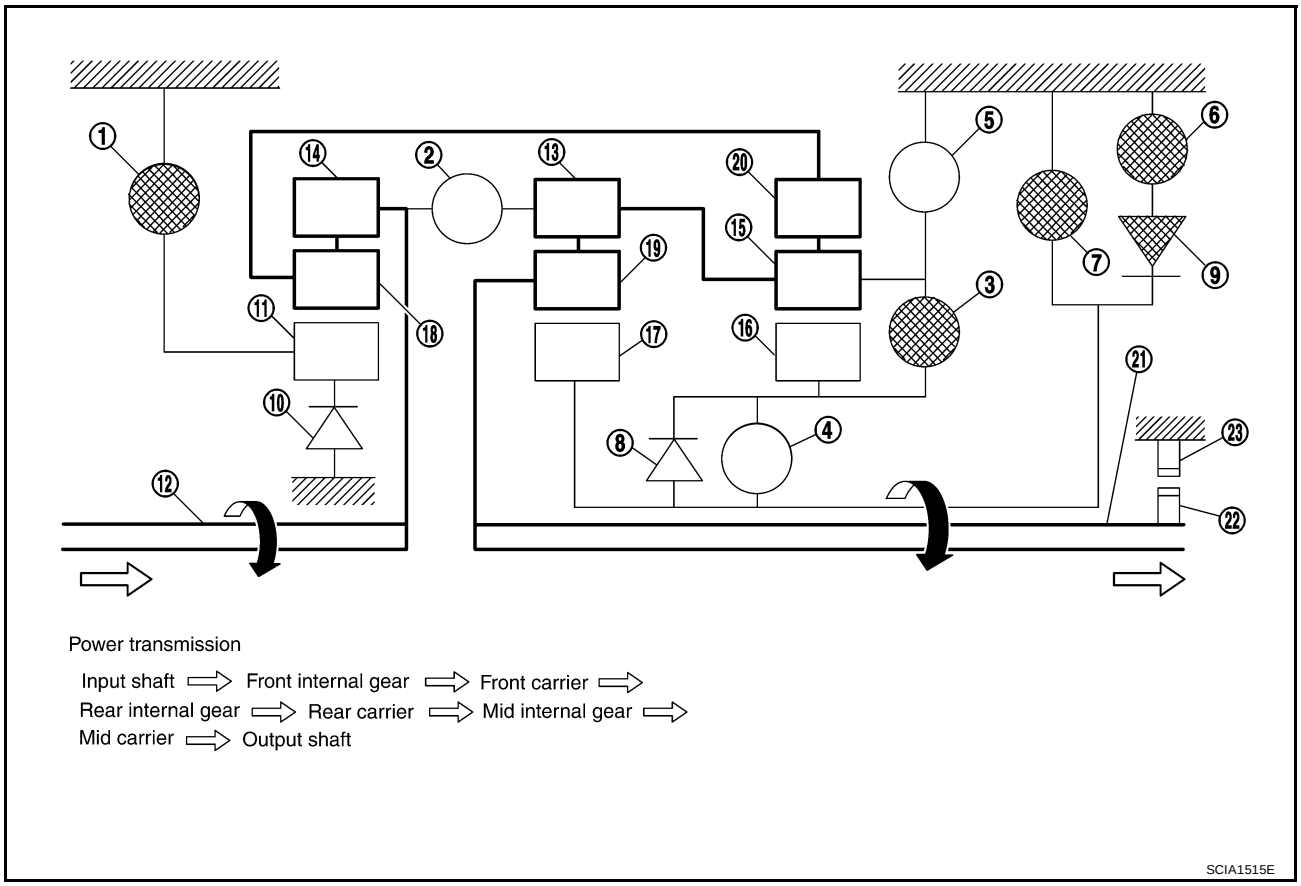

1.	Front brake	2.	Input clutch	3.	Direct clutch
4.	High and low reverse clutch	5.	Reverse brake	6.	Forward brake
7.	Low coast brake	8.	1st one-way clutch	9.	Forward one-way clutch
10.	3rd one-way clutch	11.	Front sun gear	12.	Input shaft
13.	Mid internal gear	14.	Front internal gear	15.	Rear carrier
16.	Rear sun gear	17.	Mid sun gear	18.	Front carrier
19.	Mid carrier	20.	Rear internal gear	21.	Output shaft
22.	Parking gear	23.	Parking pawl		

"D" and "3" Positions 3rd Gear

- The front brake fastens the front sun gear.
- The direct clutch is coupled, and the rear carrier and rear sun gear are connected.
- The high and low reverse clutch is coupled and the mid sun gear and rear sun gear are connected.

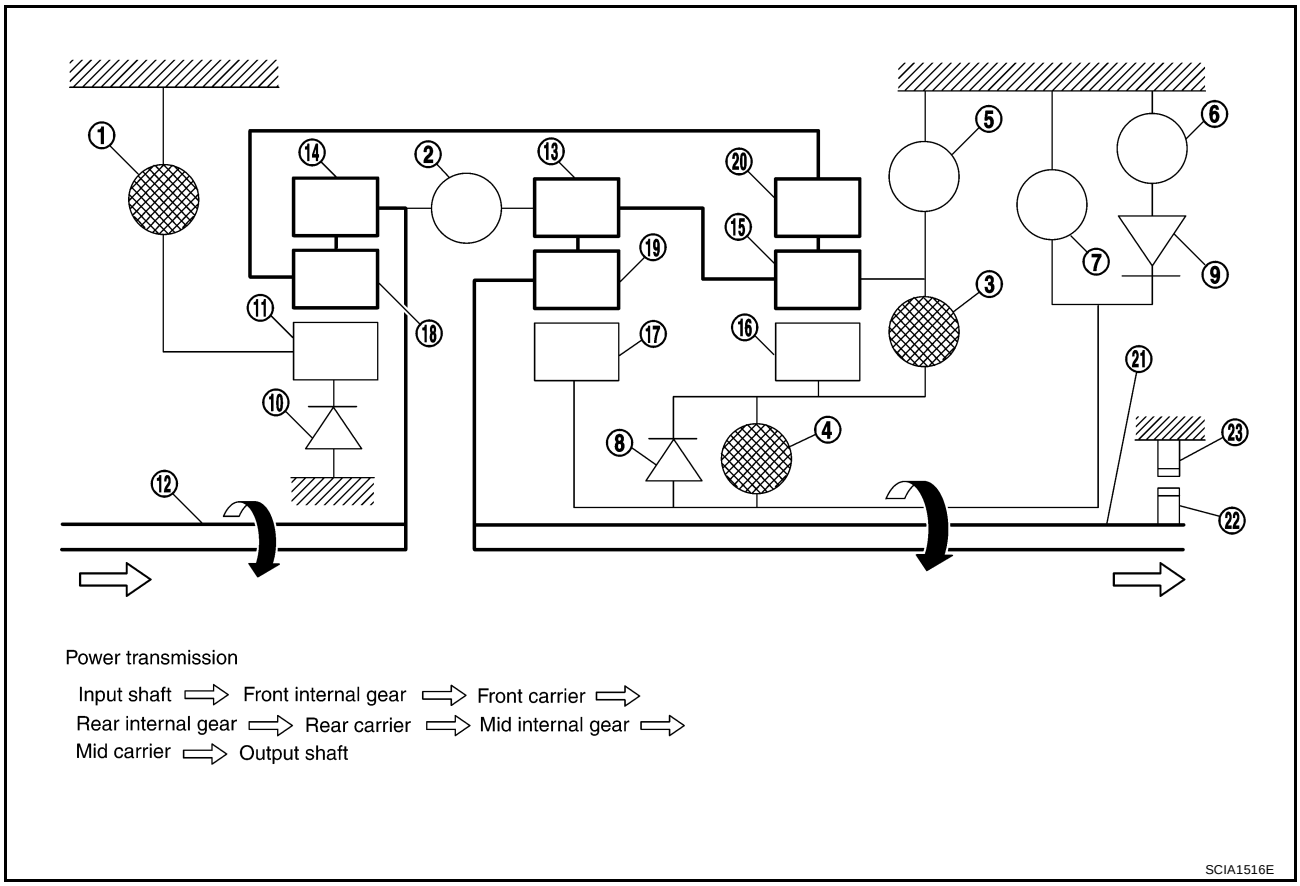

1.	Front brake	2.	Input clutch	3.	Direct clutch
4.	High and low reverse clutch	5.	Reverse brake	6.	Forward brake
7.	Low coast brake	8.	1st one-way clutch	9.	Forward one-way clutch
10.	3rd one-way clutch	11.	Front sun gear	12.	Input shaft
13.	Mid internal gear	14.	Front internal gear	15.	Rear carrier
16.	Rear sun gear	17.	Mid sun gear	18.	Front carrier
19.	Mid carrier	20.	Rear internal gear	21.	Output shaft
22.	Parking gear	23.	Parking pawl		

"D" Position 4th Gear

- The direct clutch is coupled, and the rear carrier and rear sun gear are connected.
- The high and low reverse clutch is coupled and the mid sun gear and rear sun gear are connected.
- The input clutch is coupled and the front internal gear and mid internal gear are connected.
- The drive power is conveyed to the front internal gear, mid internal gear, and rear carrier and the three planetary gears rotate forward as one unit.

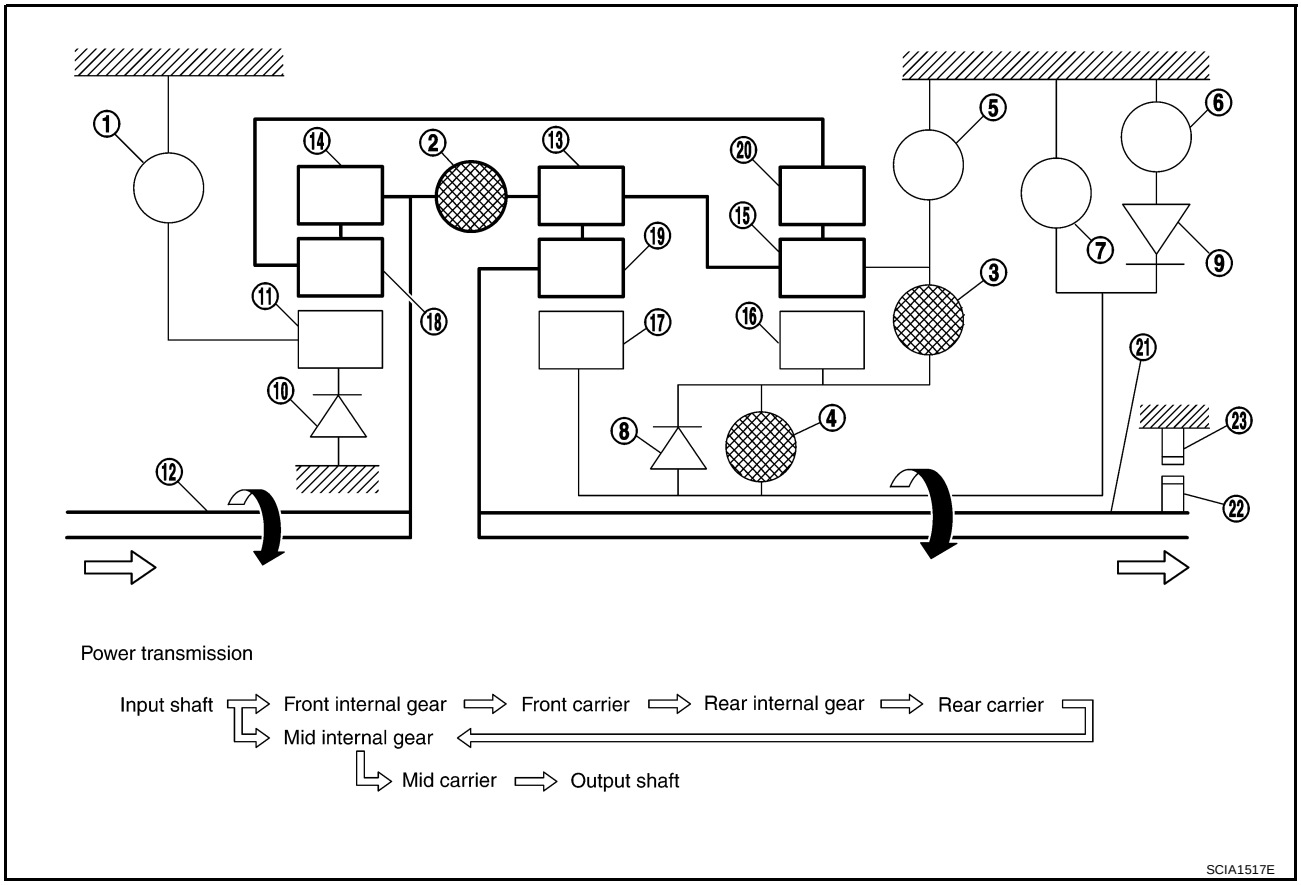

1.	Front brake	2.	Input clutch	3.	Direct clutch
4.	High and low reverse clutch	5.	Reverse brake	6.	Forward brake
7.	Low coast brake	8.	1st one-way clutch	9.	Forward one-way clutch
10.	3rd one-way clutch	11.	Front sun gear	12.	Input shaft
13.	Mid internal gear	14.	Front internal gear	15.	Rear carrier
16.	Rear sun gear	17.	Mid sun gear	18.	Front carrier
19.	Mid carrier	20.	Rear internal gear	21.	Output shaft
22.	Parking gear	23.	Parking pawl		

"D" Position 5th Gear

- The front brake fastens the front sun gear.
- The input clutch is coupled and the front internal gear and mid internal gear are connected.
- The high and low reverse clutch is coupled and the mid sun gear and rear sun gear are connected.

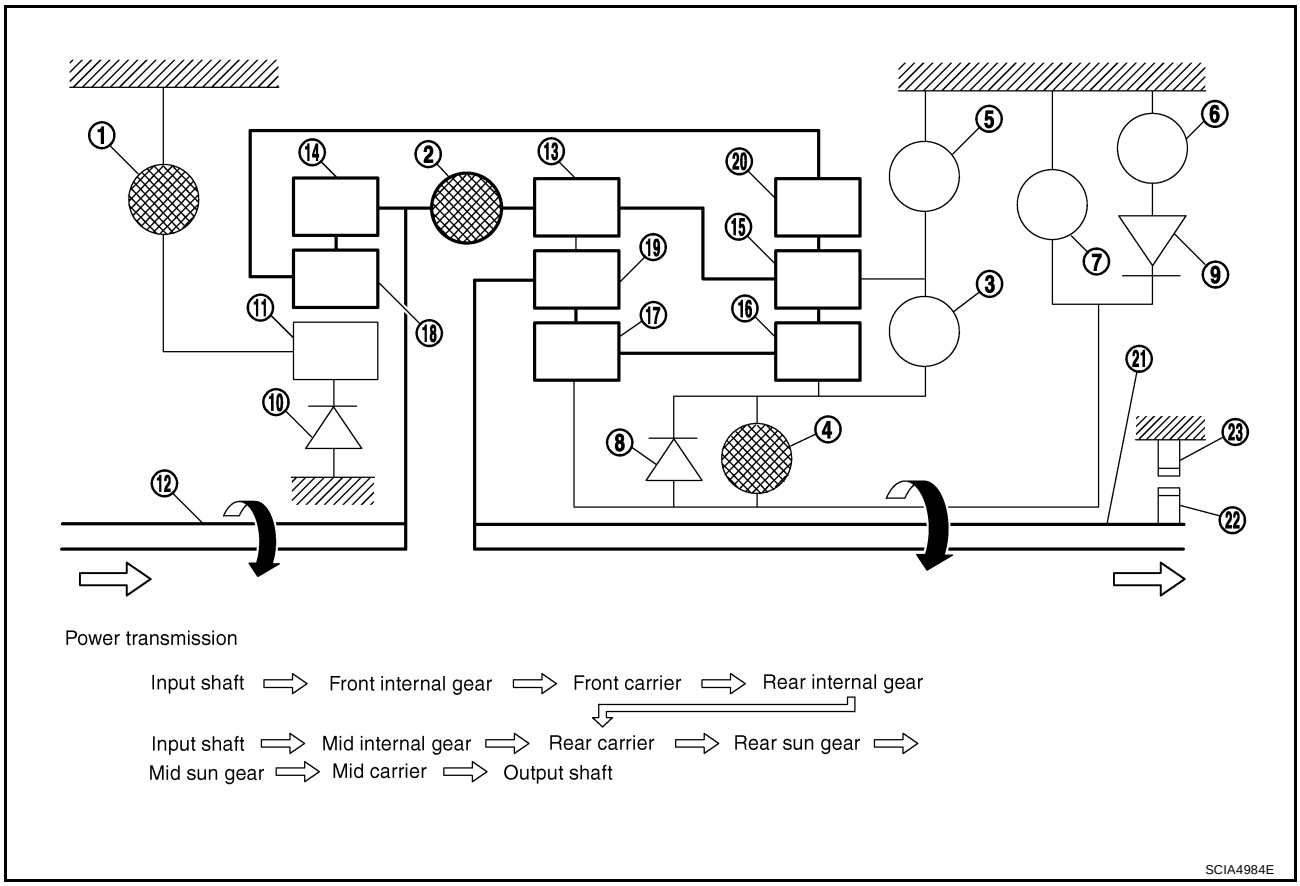

1.	Front brake	2.	Input clutch	3.	Direct clutch
4.	High and low reverse clutch	5.	Reverse brake	6.	Forward brake
7.	Low coast brake	8.	1st one-way clutch	9.	Forward one-way clutch
10.	3rd one-way clutch	11.	Front sun gear	12.	Input shaft
13.	Mid internal gear	14.	Front internal gear	15.	Rear carrier
16.	Rear sun gear	17.	Mid sun gear	18.	Front carrier
19.	Mid carrier	20.	Rear internal gear	21.	Output shaft
22.	Parking gear	23.	Parking pawl		

"R" Position

- The front brake fastens the front sun gear.
- The high and low reverse clutch is coupled, and the mid sun gear and rear sun gear are connected.
- The reverse brake fastens the rear carrier.

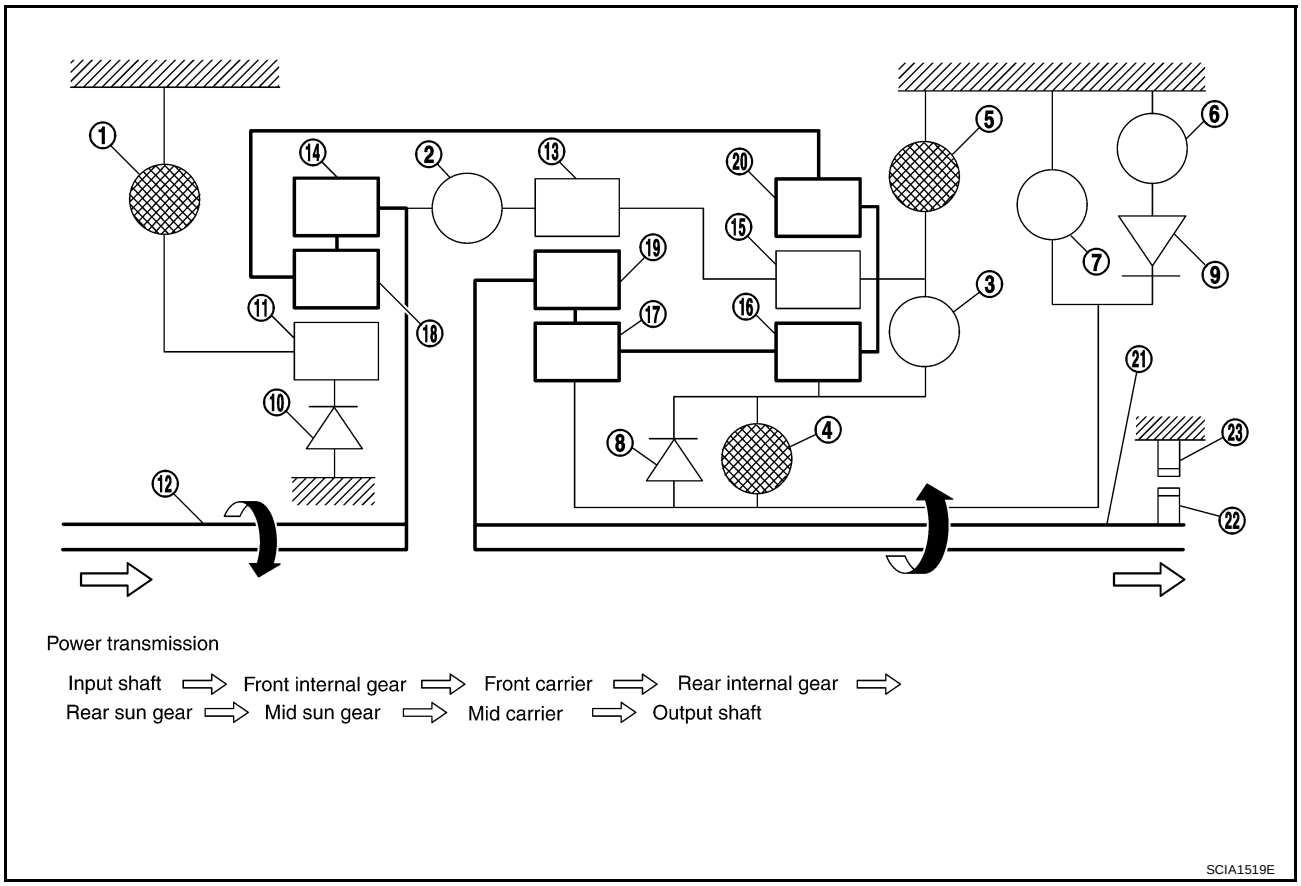

1.	Front brake	2.	Input clutch	3.	Direct clutch
4.	High and low reverse clutch	5.	Reverse brake	6.	Forward brake
7.	Low coast brake	8.	1st one-way clutch	9.	Forward one-way clutch
10.	3rd one-way clutch	11.	Front sun gear	12.	Input shaft
13.	Mid internal gear	14.	Front internal gear	15.	Rear carrier
16.	Rear sun gear	17.	Mid sun gear	18.	Front carrier
19.	Mid carrier	20.	Rear internal gear	21.	Output shaft
22.	Parking gear	23.	Parking pawl		

TCM Function

ECS00CMA

The function of the TCM is to:

- Receive input signals sent from various switches and sensors.
- Determine required line pressure, shifting point, lock-up operation, and engine brake operation.
- Send required output signals to the respective solenoids.

CONTROL SYSTEM OUTLINE

The automatic transmission senses vehicle operating conditions through various sensors or signals. It always controls the optimum shift position and reduces shifting and lock-up shocks.

SENSORS (or SIGNALS)		TCM		ACTUATORS
PNP switch Accelerator pedal position sensor Closed throttle position signal Wide open throttle position signal Engine speed signal A/T fluid temperature sensor Revolution sensor Vehicle speed signal Stop lamp switch signal Turbine revolution sensor 1st position switch signal Overdrive control switch signal ATF pressure switch signal	⇒	Shift control Line pressure control Lock-up control Engine brake control Timing control Fail-safe control Self-diagnosis CONSULT-II communication line Duet-EA control CAN system	⇒	Input clutch solenoid valve Direct clutch solenoid valve Front brake solenoid valve High and low reverse clutch solenoid valve Low coast brake solenoid valve Torque converter clutch solenoid valve Line pressure solenoid valve O/D OFF indicator lamp Starter relay Back-up lamp relay

CONTROL SYSTEM DIAGRAM

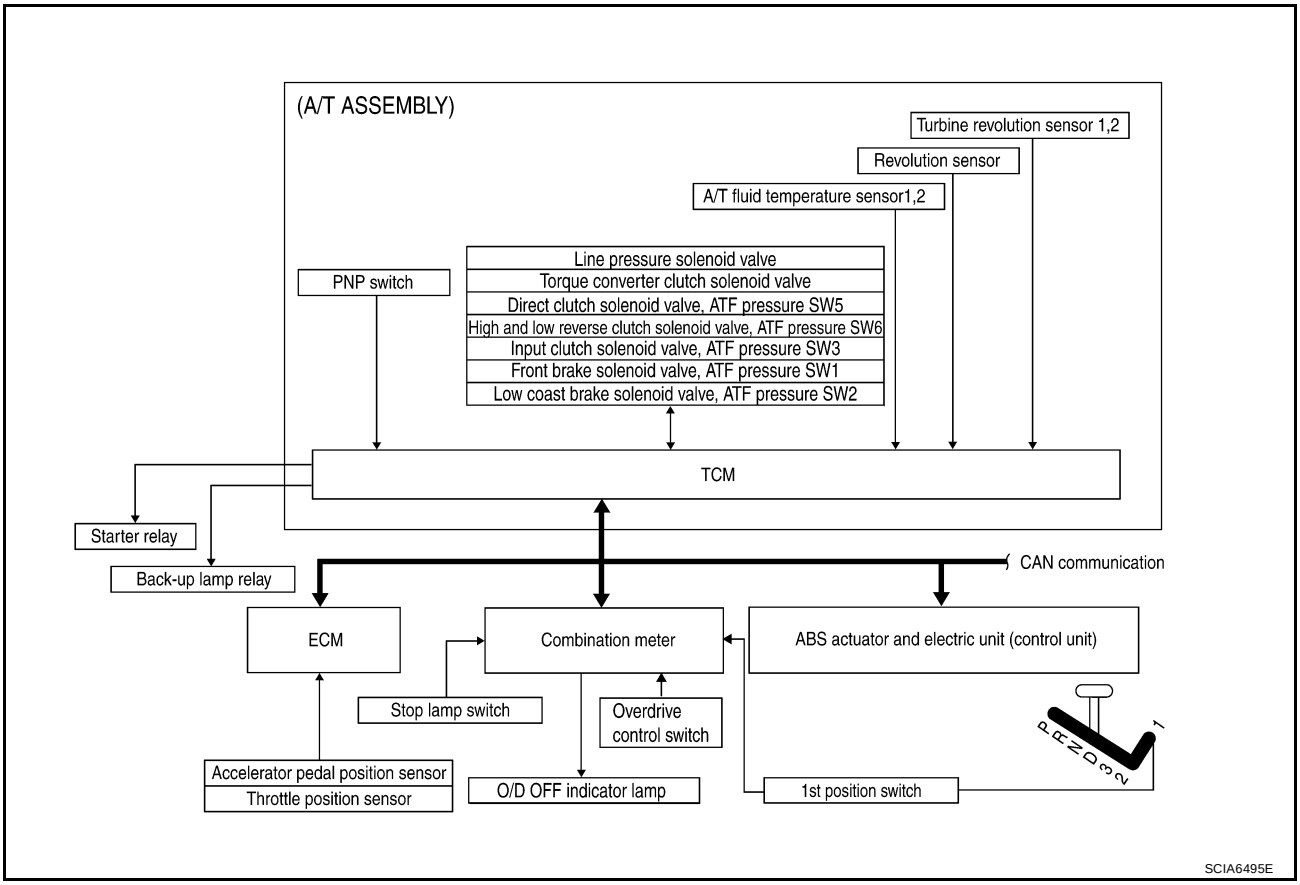

CAN Communication

ECS00CMB

SYSTEM DESCRIPTION

CAN (Controller Area Network) is a serial communication line for real time application. It is an on-vehicle multiplex communication line with high data communication speed and excellent error detection ability. Many electronic control units are equipped onto a vehicle, and each control unit shares information and links with other control units during operation (not independent). In CAN communication, control units are connected with 2 communication lines (CAN H line, CAN L line) allowing a high rate of information transmission with less wiring. Each control unit transmits/receives data but selectively reads required data only. For details, refer to LAN-4, "SYSTEM DESCRIPTION" .

Input/Output Signal of TCM

ECS00CMC

Control item			Line pressure control	Vehicle speed control	Shift control	Lock-up control	Engine brake control	Fail-safe function (*3)	Self-diagnostics function
Input	Accelerator pedal position signal (*4)		X	X	X	X	X	X	X
	Vehicle speed sensor A/T (revolution sensor)		X	X	X	X		X	X
	Vehicle speed sensor MTR(*1) (*4)		X	X	X	X			X
	Closed throttle position signal(*4)		X(*2)	X(*2)		X	X(*2)		X
	Wide open throttle position signal(*4)		X(*2)	X(*2)			X(*2)		X
	Turbine revolution sensor 1		X	X		X		X	X
	Turbine revolution sensor 2 (for 4th speed only)		X	X		X		X	X
	Engine speed signals(*4)					X			X
	PNP switch		X	X	X	X	X	X	X
	Stop lamp switch signal(*4)			X			X		X
	A/T fluid temperature sensors 1, 2		X	X	X	X	X	X	X
	ASCD	Operation signal(*4)		X	X	X	X		
		Overdrive cancel signal(*4)		X		X	X		
	TCM power supply voltage signal		X	X	X	X	X		X
Output	Direct clutch solenoid (ATF pressure switch 5)			X	X			X	X
	Input clutch solenoid (ATF pressure switch 3)			X	X			X	X
	High and low reverse clutch solenoid (ATF pressure switch 6)			X	X			X	X
	Front brake solenoid (ATF pressure switch 1)			X	X			X	X
	Low coast brake solenoid (ATF pressure switch 2)			X	X		X	X	X
	Line pressure solenoid		X	X	X	X	X	X	X
	TCC solenoid					X		X	X
	Starter relay							X	X

*1: Spare for vehicle speed sensor·A/T (revolution sensor)
*2: Spare for accelerator pedal position signal
*3: If these input and output signals are different, the TCM triggers the fail-safe function.
*4: CAN communications

Line Pressure Control

ECS00CMD

- When an input torque signal equivalent to the engine drive force is sent from the ECM to the TCM, the TCM controls the line pressure solenoid.
- This line pressure solenoid controls the pressure regulator valve as the signal pressure and adjusts the pressure of the operating oil discharged from the oil pump to the line pressure most appropriate to the driving state.

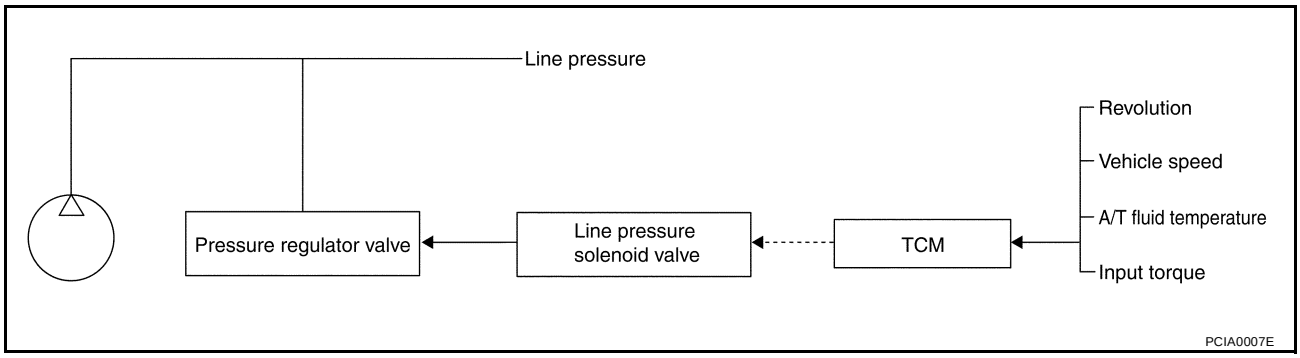

LINE PRESSURE CONTROL IS BASED ON THE TCM LINE PRESSURE CHARACTERISTIC PATTERN

- The TCM has stored in memory a number of patterns for the optimum line pressure characteristic for the driving state.
- In order to obtain the most appropriate line pressure characteristic to meet the current driving state, the TCM controls the line pressure solenoid current value and thus controls the line pressure.

Normal Control

Each clutch is adjusted to the necessary pressure to match the engine drive force.

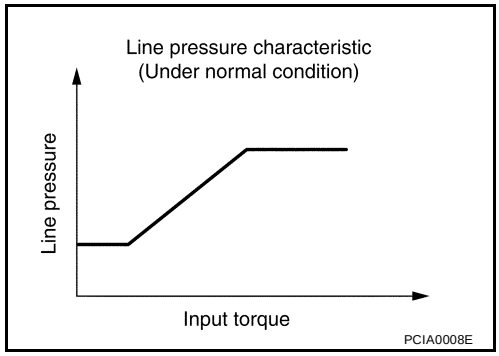

Back-up Control (Engine Brake)

When the select operation is performed during driving and the transmission is shifted down, the line pressure is set according to the vehicle speed.

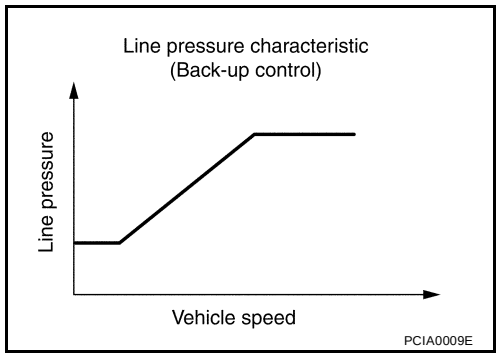

During Shift Change

The necessary and adequate line pressure for shift change is set. For this reason, line pressure pattern setting corresponds to input torque and gearshift selection. Also, line pressure characteristic is set according to engine speed, during engine brake operation.

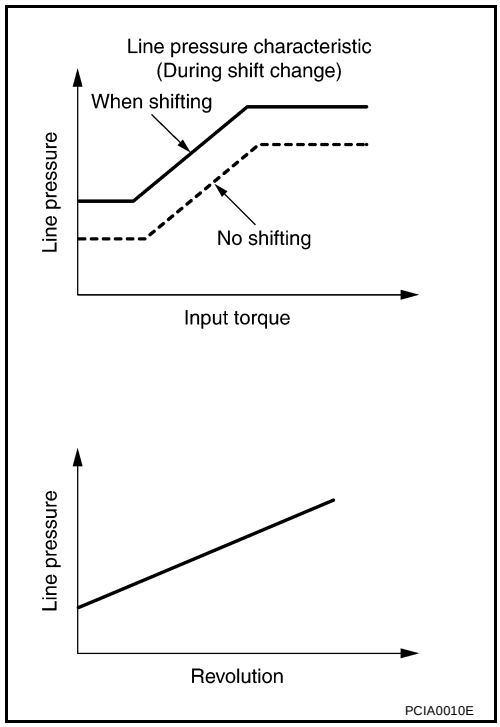

At Low Fluid Temperature

When the A/T fluid temperature drops below the prescribed temperature, in order to speed up the action of each friction element, the line pressure is set higher than the normal line pressure characteristic.

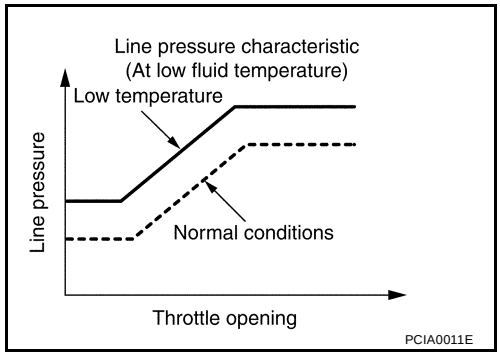

Shift Control

ECS00CME

The clutch pressure control solenoid is controlled by the signals from the switches and sensors. Thus, the clutch pressure is adjusted to be appropriate to the engine load state and vehicle driving state. It becomes possible to finely control the clutch hydraulic pressure with high precision and a smoother shift change characteristic is attained.

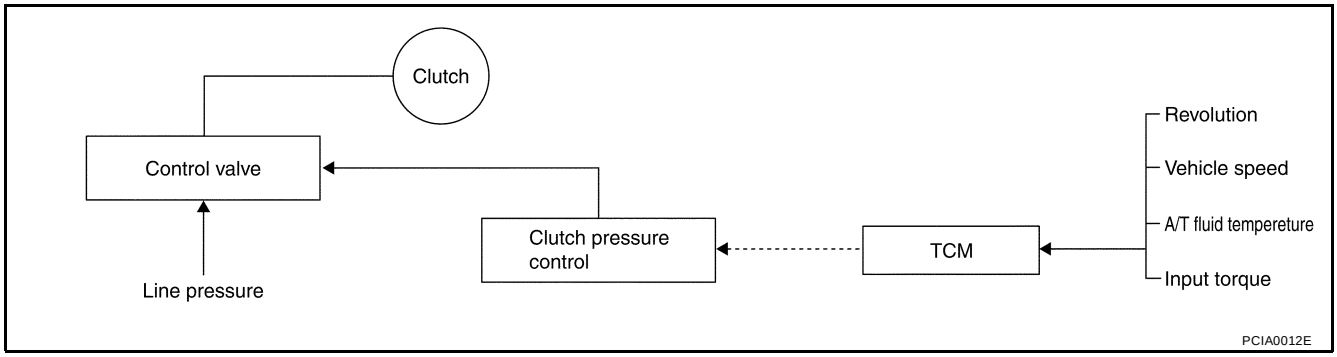

SHIFT CHANGE

The clutch is controlled with the optimum timing and oil pressure by the engine speed, engine torque information, etc.

Shift Change System Diagram

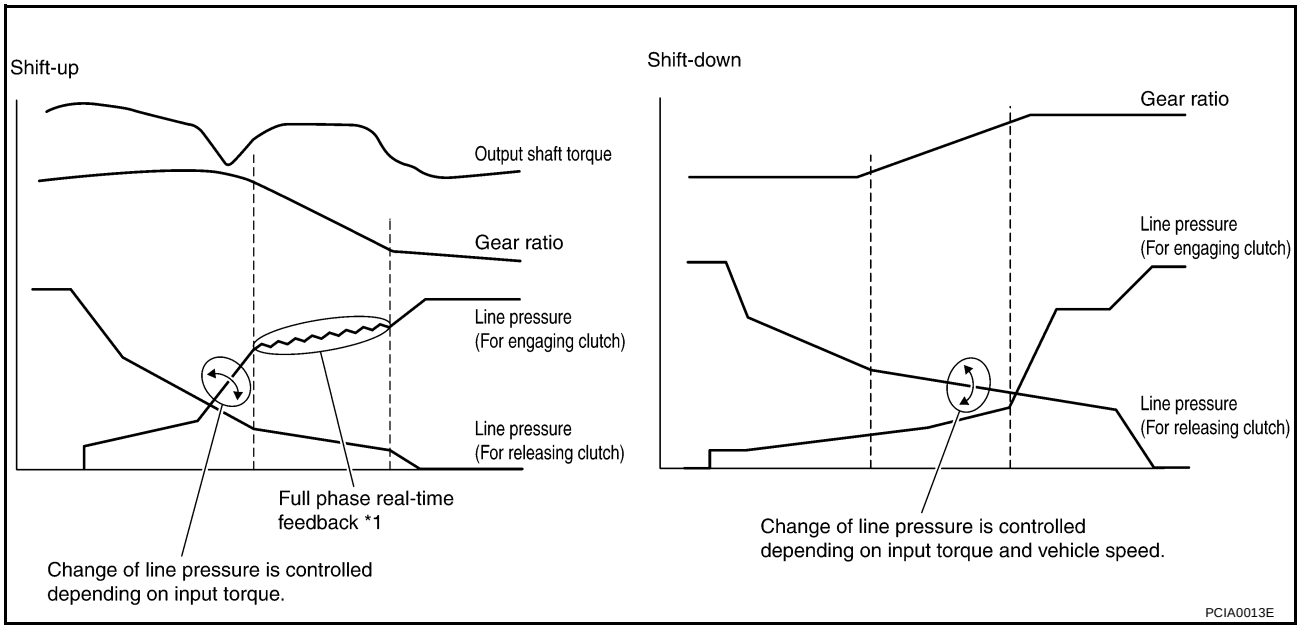

*1: Full phase real-time feedback control monitors movement of gear ratio at gear change, and controls oil pressure at real-time to achieve the best gear ratio.

Lock-up Control

ECS00CMF

The torque converter clutch piston in the torque converter is engaged to eliminate torque converter slip to increase power transmission efficiency.
The torque converter clutch control valve operation is controlled by the torque converter clutch solenoid valve, which is controlled by a signal from TCM, and the torque converter clutch control valve engages or releases the torque converter clutch piston.

Lock-up Operation Condition Table

Select lever	D position		3 position	2 position
Gear position	5	4	3	2
Lock-up	×	–	×	×
Slip lock-up	×	×	–	–

TORQUE CONVERTER CLUTCH CONTROL VALVE CONTROL

Lock-up Control System Diagram

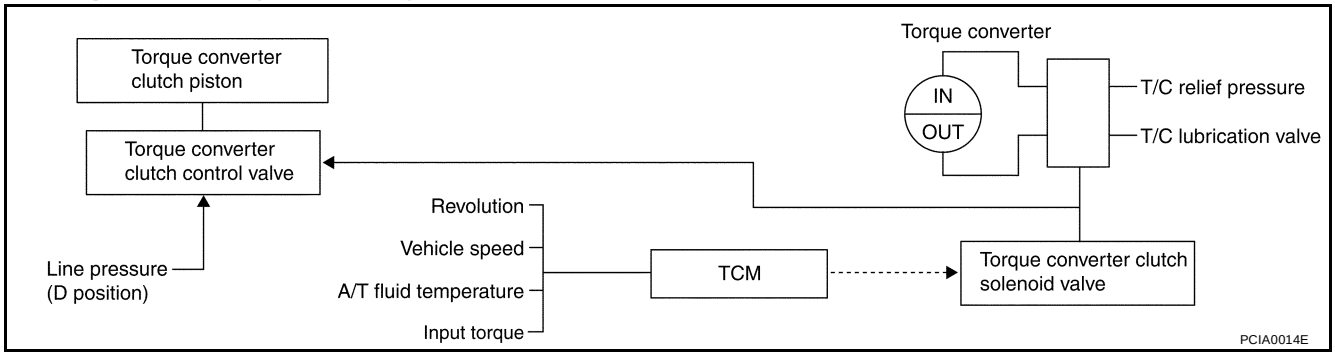

Lock-up Released

- In the lock-up released state, the torque converter clutch control valve is set into the unlocked state by the torque converter clutch solenoid and the lock-up apply pressure is drained.
  In this way, the torque converter clutch piston is not coupled.

Lock-up Applied

- In the lock-up applied state, the torque converter clutch control valve is set into the locked state by the torque converter clutch solenoid and lock-up apply pressure is generated.
  In this way, the torque converter clutch piston is pressed and coupled.

SMOOTH LOCK-UP CONTROL

When shifting from the lock-up released state to the lock-up applied state, the current output to the torque converter clutch solenoid is controlled with the TCM. In this way, when shifting to the lock-up applied state, the torque converter clutch is temporarily set to the half-clutched state to reduce the shock.

Half-clutched State

- The current output from the TCM to the torque converter clutch solenoid is varied to gradually increase the torque converter clutch solenoid pressure.
  In this way, the lock-up apply pressure gradually rises and while the torque converter clutch piston is put into half-clutched status, the torque converter clutch piston operating pressure is increased and the coupling is completed smoothly.

Slip Lock-up Control

- In the slip region, the torque converter clutch solenoid current is controlled with the TCM to put it into the half-clutched state. This absorbs the engine torque fluctuation and lock-up operates from low speed.
  This raises the fuel efficiency for 4th and 5th gears at both low speed and when the accelerator has a low degree of opening.

Engine Brake Control

ECS00CMG

- The forward one-way clutch transmits the drive force from the engine to the rear wheels. But the reverse drive from the rear wheels is not transmitted to the engine because the one-way clutch is idling.
  Therefore, the low coast brake solenoid is operated to prevent the forward one-way clutch from idling and the engine brake is operated in the same manner as conventionally.

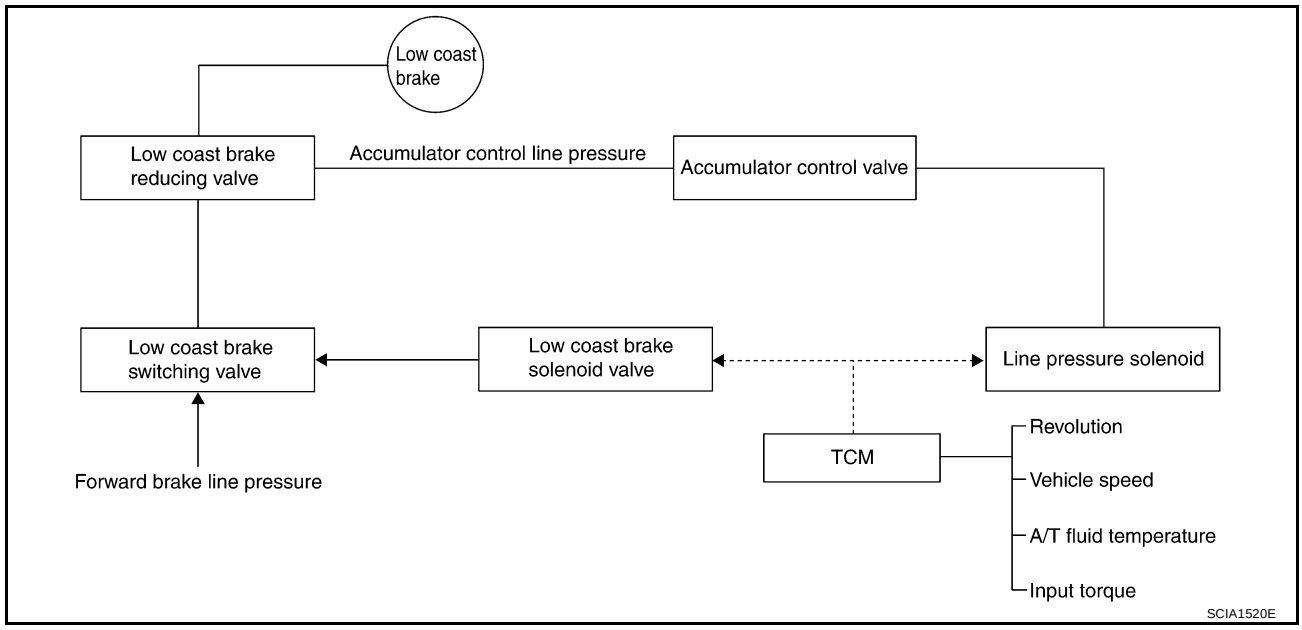

- The operation of the low coast brake solenoid switches the low coast brake switching valve and controls the coupling and releasing of the low coast brake.
  The low coast brake reducing valve controls the low coast brake coupling force.

Control Valve

ECS00CMH

FUNCTION OF CONTROL VALVE

Name	Function
Torque converter regulator valve	In order to prevent the pressure supplied to the torque converter from being excessive, the line pressure is adjusted to the optimum pressure (torque converter operating pressure).
Pressure regulator valve Pressure regulator plug Pressure regulator sleeve	Adjusts the oil discharged from the oil pump to the optimum pressure (line pressure) for the driving state.
Front brake control valve	When the front brake is coupled, adjusts the line pressure to the optimum pressure (front brake pressure) and supplies it to the front brake. (In 1st, 2nd, 3rd, and 5th gears, adjusts the clutch pressure.)
Accumulator control valve	Adjusts the pressure (accumulator control pressure) acting on the accumulator piston and low coast reducing valve to the pressure appropriate to the driving state.
Pilot valve A	Adjusts the line pressure and produces the constant pressure (pilot pressure) required for line pressure control, shift change control, and lock-up control.
Pilot valve B	Adjusts the line pressure and produces the constant pressure (pilot pressure) required for shift change control.
Low coast brake switching valve	During engine braking, supplies the line pressure to the low coast brake reducing valve.
Low coast brake reducing valve	When the low coast brake is coupled, adjusts the line pressure to the optimum pressure (low coast brake pressure) and supplies it to the low coast brake.
N-R accumulator	Produces the stabilizing pressure for when N-R is selected.
Direct clutch piston switching valve	Operates in 4th gear and switches the direct clutch coupling capacity.
High and low reverse clutch control valve	When the high and low reverse clutch is coupled, adjusts the line pressure to the optimum pressure (high and low reverse clutch pressure) and supplies it to the high and low reverse clutch. (In 1st, 3rd, 4th and 5th gears, adjusts the clutch pressure.)
Input clutch control valve	When the input clutch is coupled, adjusts the line pressure to the optimum pressure (input clutch pressure) and supplies it to the input clutch. (In 4th and 5th gears, adjusts the clutch pressure.)
Direct clutch control valve	When the direct clutch is coupled, adjusts the line pressure to the optimum pressure (direct clutch pressure) and supplies it to the direct clutch. (In 2nd, 3rd, and 4th gears, adjusts the clutch pressure.)
TCC control valve TCC control plug TCC control sleeve	Switches the lock-up to operating or released. Also, by performing the lock-up operation transiently, lock-up smoothly.
Torque converter lubrication valve	Operates during lock-up to switch the torque converter, cooling, and lubrication system oil path.
Cool bypass valve	Allows excess oil to bypass cooler circuit without being fed into it.
Line pressure relief valve	Discharges excess oil from line pressure circuit.
N-D accumulator	Produces the stabilizing pressure for when N-D is selected.
Manual valve	Sends line pressure to each circuit according to the select position. The circuits to which the line pressure is not sent drain.

FUNCTION OF PRESSURE SWITCH

Name	Function
Pressure switch 1 (FR/B)	Detects any malfunction in the front brake hydraulic pressure. When it detects any malfunction, it puts the system into fail-safe mode.
Pressure switch 2 (LC/B)	Detects any malfunction in the low coast brake hydraulic pressure. When it detects any malfunction, it puts the system into fail-safe mode.
Pressure switch 3 (I/C)	Detects any malfunction in the input clutch hydraulic pressure. When it detects any malfunction, it puts the system into fail-safe mode.

Name	Function
Pressure switch 5 (D/C)	Detects any malfunction in the direct clutch hydraulic pressure. When it detects any malfunction, it puts the system into fail-safe mode.
Pressure switch 6 (HLR/C)	Detects any malfunction in the high and low reverse clutch hydraulic pressure. When it detects any malfunction, it puts the system into fail-safe mode.

ON BOARD DIAGNOSTIC (OBD) SYSTEM

PFP:00028

Introduction

ECS00CMI

The A/T system has two self-diagnostic systems.
The first is the emission-related on board diagnostic system (OBD-II) performed by the TCM in combination with the ECM. The malfunction is indicated by the MIL (malfunction indicator lamp) and is stored as a DTC in the ECM memory but not the TCM memory.
The second is the TCM original self-diagnosis indicated by the A/T CHECK indicator lamp. The malfunction is stored in the TCM memory. The detected items are overlapped with OBD-II self-diagnostic items. For detail, refer to AT-90, "SELF-DIAGNOSTIC RESULT MODE" .

OBD-II Function for A/T System

ECS00CMJ

The ECM provides emission-related on board diagnostic (OBD-II) functions for the A/T system. One function is to receive a signal from the TCM used with OBD-related parts of the A/T system. The signal is sent to the ECM when a malfunction occurs in the corresponding OBD-related part. The other function is to indicate a diagnostic result by means of the MIL (malfunction indicator lamp) on the instrument panel. Sensors, switches and solenoid valves are used as sensing elements.
The MIL automatically illuminates in One or Two Trip Detection Logic when a malfunction is sensed in relation to A/T system parts.

One or Two Trip Detection Logic of OBD-II

ECS00CMK

ONE TRIP DETECTION LOGIC

If a malfunction is sensed during the first test drive, the MIL will illuminate and the malfunction will be stored in the ECM memory as a DTC. The TCM is not provided with such a memory function.

TWO TRIP DETECTION LOGIC

When a malfunction is sensed during the first test drive, it is stored in the ECM memory as a 1st trip DTC (diagnostic trouble code) or 1st trip freeze frame data. At this point, the MIL will not illuminate. — 1st Trip
If the same malfunction as that experienced during the first test drive is sensed during the second test drive, the MIL will illuminate. — 2nd Trip
The “Trip” in the “One or Two Trip Detection Logic” means a driving mode in which self-diagnosis is performed during vehicle operation.

OBD-II Diagnostic Trouble Code (DTC)

ECS00CML

HOW TO READ DTC AND 1ST TRIP DTC

DTC and 1st trip DTC can be read by the following methods.
(with CONSULT-II or GST GST) CONSULT-II or GST (Generic Scan Tool) Examples: P0705, P0720 etc.
These DTC are prescribed by SAE J2012.
(CONSULT-II also displays the malfunctioning component or system.)

- **1st trip DTC No. is the same as DTC No.**
- **Output of the diagnostic trouble code indicates that the indicated circuit has a malfunction. However, in case of the Mode II and GST, they do not indicate whether the malfunction is still occurring or occurred in the past and returned to normal.**
  CONSULT-II can identify them as shown below, therefore, CONSULT-II (if available) is recommended.

A sample of CONSULT-II display for DTC and 1st trip DTC is shown on the next page. DTC or 1st trip DTC of a malfunction is displayed in SELF-DIAGNOSTIC RESULTS mode for “ENGINE” with CONSULT-II. Time data indicates how many times the vehicle was driven after the last detection of a DTC.

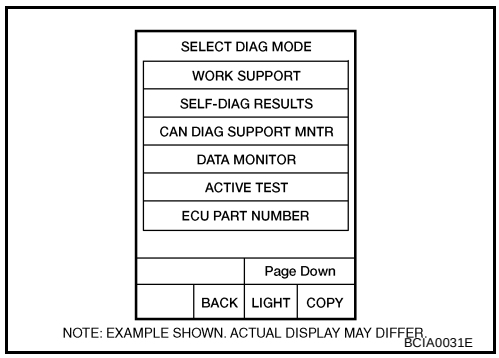

If the DTC is being detected currently, the time data will be “0”.

SELF-DIAG RESULTS	
DTC RESULTS	TIME
PNP SW/CIRC [P0705]	0

SAT015K

If a 1st trip DTC is stored in the ECM, the time data will be “1t”.

SELF-DIAG RESULTS	
DTC RESULTS	TIME
PNP SW/CIRC [P0705]	1 t

SAT016K

Freeze Frame Data and 1st Trip Freeze Frame Data

The ECM has a memory function, which stores the driving condition such as fuel system status, calculated load value, engine coolant temperature, short term fuel trim, long term fuel trim, engine speed and vehicle speed at the moment the ECM detects a malfunction.
Data which are stored in the ECM memory, along with the 1st trip DTC, are called 1st trip freeze frame data, and the data, stored together with the DTC data, are called freeze frame data and displayed on CONSULT-II or GST. The 1st trip freeze frame data can only be displayed on the CONSULT-II screen, not on the GST. For detail, refer to AT-40, "ON BOARD DIAGNOSTIC (OBD) SYSTEM" .
Only one set of freeze frame data (either 1st trip freeze frame data of freeze frame data) can be stored in the ECM. 1st trip freeze frame data is stored in the ECM memory along with the 1st trip DTC. There is no priority for 1st trip freeze frame data and it is updated each time a different 1st trip DTC is detected. However, once freeze frame data (2nd trip detection/MIL on) is stored in the ECM memory, 1st trip freeze frame data is no longer stored. Remember, only one set of freeze frame data can be stored in the ECM. The ECM has the following priorities to update the data.

Priority	Items	
1	Freeze frame data	Misfire — DTC: P0300 - P0306 Fuel Injection System Function — DTC: P0171, P0172, P0174, P0175
2		Except the above items (Includes A/T related items)
3	1st trip freeze frame data	

Both 1st trip freeze frame data and freeze frame data (along with the DTC) are cleared when the ECM memory is erased.

HOW TO ERASE DTC

The diagnostic trouble code can be erased by CONSULT-II, GST or ECM DIAGNOSTIC TEST MODE as described following.

- **If the battery cable is disconnected, the diagnostic trouble code will be lost within 24 hours.**
- **When you erase the DTC, using CONSULT-II or GST is easier and quicker than switching the mode selector on the ECM.**

The following emission-related diagnostic information is cleared from the ECM memory when erasing DTC related to OBD-II. For details, refer to EC-48, "EMISSION-RELATED DIAGNOSTIC INFORMATION ITEMS" .

- **Diagnostic trouble codes (DTC)**
- **1st trip diagnostic trouble codes (1st trip DTC)**
- **Freeze frame data**

- **1st trip freeze frame data**
- **System readiness test (SRT) codes**
- **Test values**

HOW TO ERASE DTC (WITH CONSULT-II)

- **If a DTC is displayed for both ECM and TCM, it is necessary to be erased for both ECM and TCM.**

1. If the ignition switch stays “ON” after repair work, be sure to turn ignition switch “OFF” once. Wait at least 10 seconds and then turn it “ON” (engine stopped) again.
2. Turn CONSULT-II “ON” and touch “A/T”.
3. Touch “SELF-DIAG RESULTS”.
4. Touch “ERASE”. (The DTC in the TCM will be erased.) Then touch “BACK” twice.
5. Touch “ENGINE”.
6. Touch “SELF-DIAG RESULTS”.
7. Touch “ERASE”. (The DTC in the ECM will be erased.)

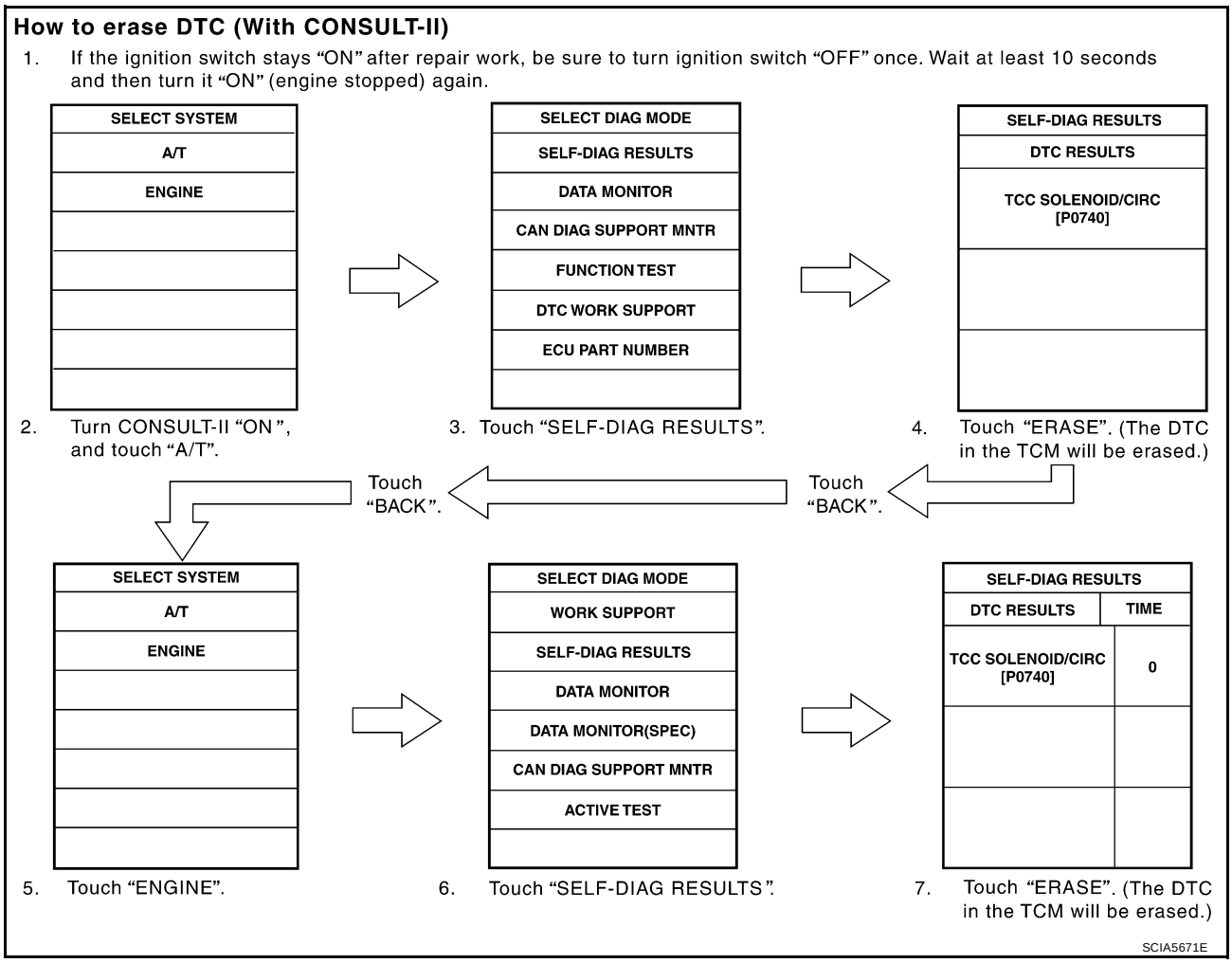

HOW TO ERASE DTC (WITH GST)

1. If the ignition switch stays “ON” after repair work, be sure to turn ignition switch “OFF” once. Wait at least 10 seconds and then turn it “ON” (engine stopped) again.
2. Select Mode 4 with the Generic Scan Tool (GST). For details refer to EC-128, "Generic Scan Tool (GST) Function" .

HOW TO ERASE DTC (NO TOOLS)

1. Disconnect battery for 24 hours.
2. Reconnect battery.

Malfunction Indicator Lamp (MIL)

ECS00CMM

DESCRIPTION

The MIL is located on the instrument panel.

1. The MIL will light up when the ignition switch is turned “ON” without the engine running. This is a bulb check.

- If the MIL does not light up, refer to DI-24, "WARNING LAMPS" .

2. When the engine is started, the MIL should go off.
   If the MIL remains on, the on board diagnostic system has detected an engine system malfunction.

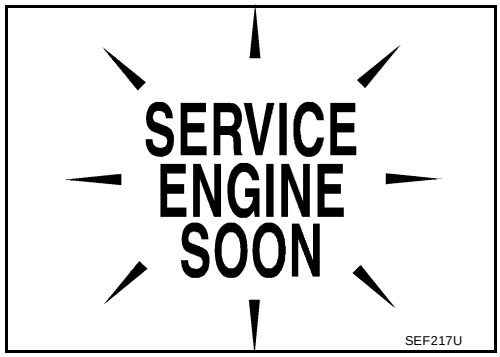

TROUBLE DIAGNOSIS

PFP:00004

DTC Inspection Priority Chart

ECS00CMN

If some DTCs are displayed at the same time, perform inspections one by one based on the following priority chart.

NOTE:
If DTC U1000 is displayed with other DTCs, first perform the trouble diagnosis for DTC U1000. Refer to AT-98 .

Priority	Detected items (DTC)
1	U1000 CAN communication line
2	Except above

Fail-Safe

ECS00CMO

The TCM has an electrical fail-safe mode. This mode makes it possible to operate even if there is an error in a main electronic control input/output signal circuit. In fail-safe mode the transmission is fixed in 2nd, 4th or 5th (depending on the breakdown position), so the customer should feel “slipping” or “poor acceleration”.
Even when the electronic circuits are normal, under special conditions (for example, when slamming on the brake with the wheels spinning drastically and stopping the tire rotation), the transmission can go into fail-safe mode. If this happens, switch “OFF” the ignition switch for 10 seconds, then switch it “ON” again to return to the normal shift pattern. Therefore, the customer's vehicle has returned to normal, so handle according to the “diagnostics flow” (Refer to AT-47, "WORK FLOW").

FAIL-SAFE FUNCTION

If any malfunction occurs in a sensor or solenoid, this function controls the A/T to mark driving possible.

Vehicle Speed Sensor

- Signals are input from two systems - from vehicle speed sensor A/T (revolution sensor) installed on the transmission and from combination meter so normal driving is possible even if there is a malfunction in one of the systems. And if vehicle speed sensor A/T (revolution sensor) has unusual cases, 5th gear is prohibited.

Accelerator Pedal Position Sensor

- If there is a malfunction in one of the systems, the accelerator opening angle is controlled by ECM according to a pre-determined accelerator angle to make driving possible. And if there are malfunctions in tow systems, the engine speed is fixed by ECM to a pre-determined engine speed to make driving possible.

Throttle Position Sensor

- If there is a malfunction in one of the systems, the accelerator opening angle is controlled by ECM according to a pre-determined accelerator angle to make driving possible. And if there are malfunctions in tow systems, the accelerator opening angle is controlled by the idle signal sent from the ECM which is based on input indicating either idle condition or off-idle condition (pre-determined accelerator opening) in order to make driving possible.

PNP Switch

- In the unlikely event that a malfunction signal enters the TCM, the position indicator is switched “OFF”, the starter relay is switched “OFF” (starter starting is disabled), the back-up lamp relay switched “OFF” (back-up lamp is OFF) and the position is fixed to the “D” range to make driving possible.

Starter Relay

- The starter relay is switched “OFF”. (Starter starting is disabled.)

A/T Interlock

- If there is an A/T interlock judgment malfunction, the transmission is fixed in 2nd gear to make driving possible.

  NOTE:
  When the vehicle is driven fixed in 2nd gear, a turbine revolution sensor malfunction is displayed, but this is not a turbine revolution sensor malfunction.

- When the coupling pattern below is detected, the fail-safe action corresponding to the pattern is performed.

A/T INTERLOCK COUPLING PATTERN TABLE

●: NG X: OK

Gear position		ATF pressure switch output					Fail-safe function	Clutch pressure output pattern after fail-safe function					
		SW3 (I/C)	SW6 (HLR/C)	SW5 (D/C)	SW1 (FR/B)	SW2 (LC/B)		I/C	HLR/C	D/C	FR/B	LC/B	L/U
A/T interlock coupling pattern	3rd	–	X	X	–	●	Held in 2nd gear	OFF	OFF	ON	OFF	OFF	OFF
	4th	–	X	X	–	●	Held in 2nd gear	OFF	OFF	ON	OFF	OFF	OFF
	5th	X	X	–	X	●	Held in 2nd gear	OFF	OFF	ON	OFF	OFF	OFF

A/T 1st Engine Braking

- When there is an A/T first gear engine brake judgment malfunction, the low coast brake solenoid is switched “OFF” to avoid the engine brake operation.

Line Pressure Solenoid

- The solenoid is switched “OFF” and the line pressure is set to the maximum hydraulic pressure to make driving possible.

Torque Converter Clutch Solenoid

- The solenoid is switched “OFF” to release the lock-up.

Low Coast Brake Solenoid

- When a (electrical or functional) malfunction occurs, in order to make driving possible, the engine brake is not applied in 1st and 2nd gear.

Input Clutch Solenoid

- If a (electrical or functional) malfunction occurs with the solenoid either “ON” or “OFF”, the transmission is held in 4th gear to make driving possible.

Direct Clutch Solenoid

- If a (electrical or functional) malfunction occurs with the solenoid either “ON” or “OFF”, the transmission is held in 4th gear to make driving possible.

Front Brake Solenoid

- If a (electrical or functional) malfunction occurs with the solenoid “ON”, in order to make driving possible, the A/T is held in 5th gear; if the solenoid is OFF, 4th gear.

High and Low Reverse Clutch Solenoid

- If a (electrical or functional) malfunction occurs with the solenoid either “ON” or “OFF”, the transmission is held in 4th gear to make driving possible.

Turbine Revolution Sensor 1 or 2

- The control is the same as if there were no turbine revolution sensors, 5th gear is prohibited.

How To Perform Trouble Diagnosis For Quick and Accurate Repair

ECS00CMP

INTRODUCTION

The TCM receives a signal from the vehicle speed sensor, accelerator pedal position sensor (throttle position sensor) or PNP switch and provides shift control or lock-up control via A/T solenoid valves.

The TCM also communicates with the ECM by means of a signal sent from sensing elements used with the OBD-related parts of the A/T system for malfunction-diagnostic purposes. The TCM is capable of diagnosing malfunctioning parts while the ECM can store malfunctions in its memory.

Input and output signals must always be correct and stable in the operation of the A/T system. The A/T system must be in good operating condition and be free of valve seizure, solenoid valve malfunction, etc.

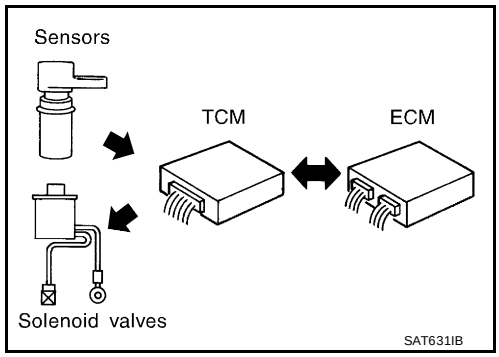

It is much more difficult to diagnose a error that occurs intermittently rather than continuously. Most intermittent errors are caused by poor electric connections or improper wiring. In this case, careful checking of suspected circuits may help prevent the replacement of good parts.

A visual check only may not find the cause of the errors. A road test with CONSULT-II (or GST) or a circuit tester connected should be performed. Follow the AT-47, "WORK FLOW" .

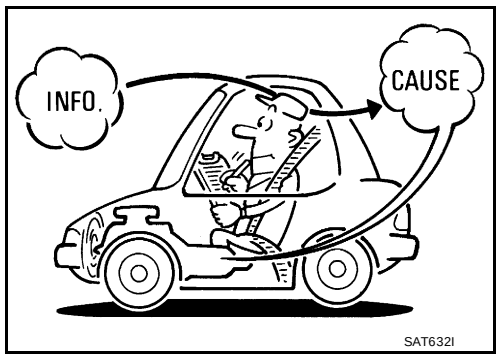

Before undertaking actual checks, take a few minutes to talk with a customer who approaches with a driveability complaint. The customer can supply good information about such errors, especially intermittent ones. Find out what symptoms are present and under what conditions they occur. A “Diagnostic Worksheet” as shown on the example (Refer to AT-48) should be used.

Start your diagnosis by looking for “conventional” errors first. This will help troubleshoot driveability errors on an electronically controlled engine vehicle.

Also check related Service bulletins.

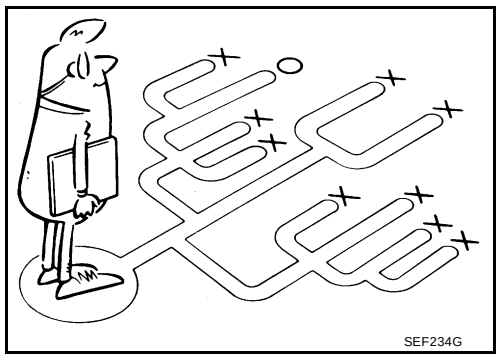

WORK FLOW

A good understanding of the malfunction conditions can make troubleshooting faster and more accurate.
In general, each customer feels differently about a malfunction. It is important to fully understand the symptoms or conditions for a customer complaint.
Make good use of the two sheets provided, “Information From Customer” (Refer to AT-48) and “Diagnostic Worksheet” (Refer to AT-48), to perform the best troubleshooting possible.

Work Flow Chart

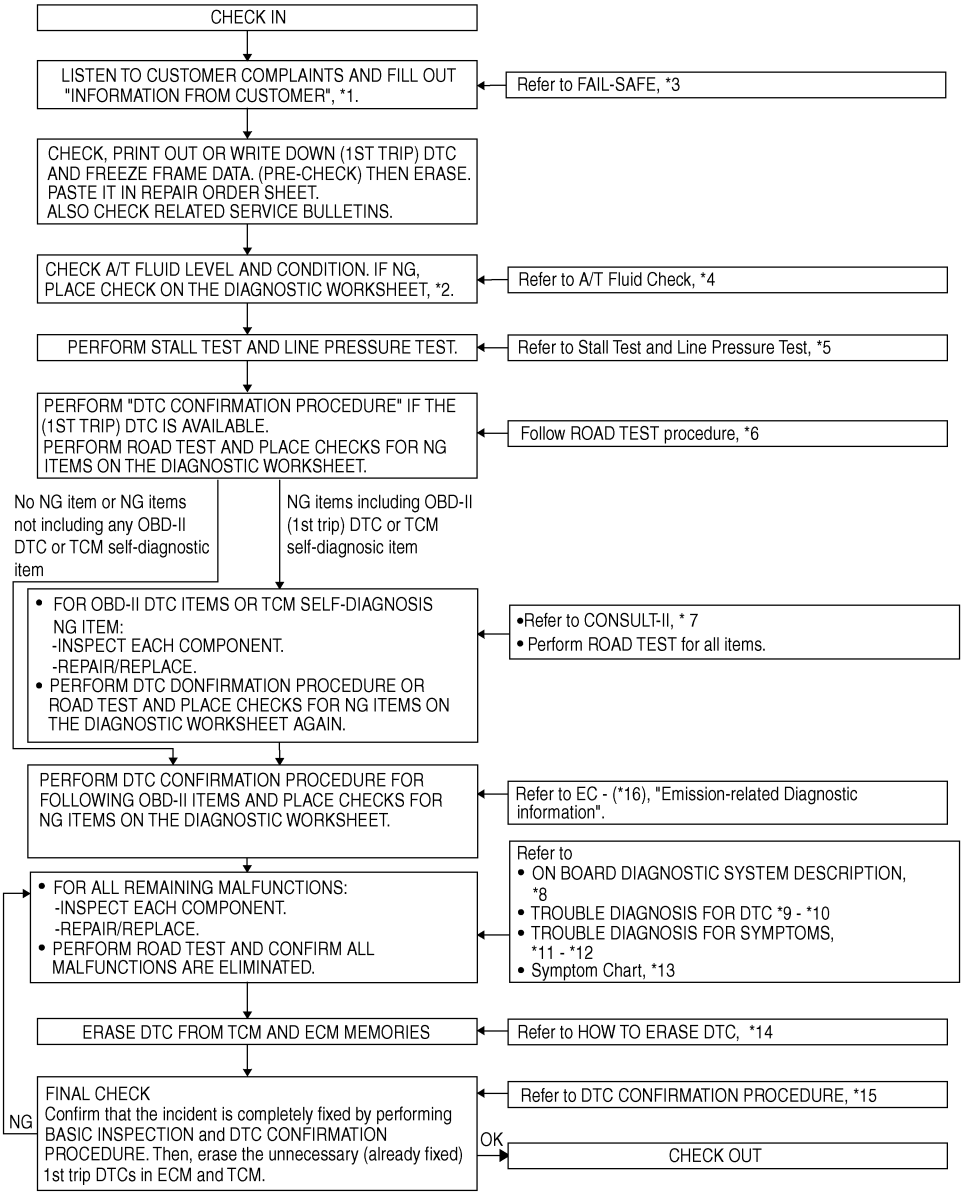

WCIA0251E

*1. AT-48	*2. AT-48	*3. AT-44
*4. AT-54	*5. AT-54, AT-55	*6. AT-57
*7. AT-88	*8. AT-40	*9. AT-98
*10. AT-173	*11. AT-178	*12. AT-214
*13. AT-65	*14. AT-41	*15. AT-98
*16. EC-48		

DIAGNOSTIC WORKSHEET

Information From Customer

KEY POINTS

- **WHAT**..... Vehicle & A/T model
- **WHEN**..... Date, Frequencies
- **WHERE**..... Road conditions
- **HOW**..... Operating conditions, Symptoms

Customer name MR/MS	Model & Year	VIN
Trans. Model	Engine	Mileage
Malfunction Date	Manuf. Date	In Service Date
Frequency	❑ Continuous ❑ Intermittent (times a day)	
Symptoms	❑ Vehicle does not move. (❑ Any position ❑ Particular position)	
	❑ No up-shift (❑ 1st → 2nd ❑ 2nd → 3rd ❑ 3rd → 4th ❑ 4th → 5th)	
	❑ No down-shift (❑ 5th → 4th ❑ 4th → 3rd ❑ 3rd → 2nd ❑ 2nd → 1st)	
	❑ Lock-up malfunction	
	❑ Shift point too high or too low.	
	❑ Shift shock or slip (❑ N → D ❑ Lock-up ❑ Any drive position)	
	❑ Noise or vibration	
	❑ No kick down	
	❑ No pattern select	
	❑ Others ( )	
Malfunction indicator lamp (MIL)	❑ Continuously lit	❑ Not lit

Diagnostic Worksheet Chart

1	❑ Read the item on cautions concerning fail-safe and understand the customer's complaint.			AT-44
2	❑ ATF inspection			AT-54
		❑ Leak (Repair leak location.) ❑ State ❑ Amount		
3	❑ Stall test and line pressure test			AT-54, AT-55
		❑ Stall test		
			❑ Torque converter one-way clutch ❑ Front brake ❑ High and low reverse clutch ❑ Low coast brake ❑ Forward brake ❑ Reverse brake ❑ Forward one-way clutch	❑ 1st one-way clutch ❑ 3rd one-way clutch ❑ Engine ❑ Line pressure low ❑ Except for input clutch and direct clutch, clutches and brakes OK
		❑ Line pressure inspection - Suspected part:		

4	❏ Perform all road tests and enter checks in required inspection items.			AT-57
	4-1.	Check before engine is started		AT-58
		❏ AT-178, "O/D OFF Indicator Lamp Does Not Come On" ❏ Perform self-diagnostics Enter checks for detected items. AT-90		
			❏ AT-98, "DTC U1000 CAN COMMUNICATION LINE" ❏ AT-101, "DTC P0615 START SIGNAL CIRCUIT" ❏ AT-105, "DTC P0700 TCM" ❏ AT-106, "DTC P0705 PARK/NEUTRAL POSITION SWITCH" ❏ AT-112, "DTC P0720 VEHICLE SPEED SENSOR A/T (REVOLUTION SENSOR)" ❏ AT-117, "DTC P0725 ENGINE SPEED SIGNAL" ❏ AT-119, "DTC P0740 TORQUE CONVERTER CLUTCH SOLENOID VALVE" ❏ AT-121, "DTC P0744 A/T TCC S/V FUNCTION (LOCK-UP)" ❏ AT-123, "DTC P0745 LINE PRESSURE SOLENOID VALVE" ❏ AT-125, "DTC P1705 THROTTLE POSITION SENSOR" ❏ AT-128, "DTC P1710 A/T FLUID TEMPERATURE SENSOR CIRCUIT" ❏ AT-110, "DTC P0717 TURBINE REVOLUTION SENSOR" ❏ AT-133, "DTC P1721 VEHICLE SPEED SENSOR MTR" ❏ AT-135, "DTC P1730 A/T INTERLOCK" ❏ AT-138, "DTC P1731 A/T 1ST ENGINE BRAKING" ❏ AT-140, "DTC P1752 INPUT CLUTCH SOLENOID VALVE" ❏ AT-142, "DTC P1754 INPUT CLUTCH SOLENOID VALVE FUNCTION" ❏ AT-144, "DTC P1757 FRONT BRAKE SOLENOID VALVE" ❏ AT-146, "DTC P1759 FRONT BRAKE SOLENOID VALVE FUNCTION" ❏ AT-148, "DTC P1762 DIRECT CLUTCH SOLENOID VALVE" ❏ AT-150, "DTC P1764 DIRECT CLUTCH SOLENOID VALVE FUNCTION" ❏ AT-152, "DTC P1767 HIGH AND LOW REVERSE CLUTCH SOLENOID VALVE" ❏ AT-154, "DTC P1769 HIGH AND LOW REVERSE CLUTCH SOLENOID VALVE FUNCTION" ❏ AT-156, "DTC P1772 LOW COAST BRAKE SOLENOID VALVE" ❏ AT-158, "DTC P1774 LOW COAST BRAKE SOLENOID VALVE FUNCTION" ❏ AT-160, "DTC P1841 ATF PRESSURE SWITCH 1" ❏ AT-162, "DTC P1843 ATF PRESSURE SWITCH 3" ❏ AT-164, "DTC P1845 ATF PRESSURE SWITCH 5" ❏ AT-166, "DTC P1846 ATF PRESSURE SWITCH 6"	
	4-2.	Idle inspection		AT-58
		❏ AT-179, "Engine Cannot Be Started In “P” or “N” Position" ❏ AT-180, "In “P” Position, Vehicle Moves When Pushed" ❏ AT-181, "In “N” Position, Vehicle Moves" ❏ AT-182, "Large Shock (“N” to “D” Position)" ❏ AT-184, "Vehicle Does Not Creep Backward In “R” Position" ❏ AT-187, "Vehicle Does Not Creep Forward In “D” Position"		
	4-3.	Driving tests		AT-59
		Part 1		
		❏ AT-189, "Vehicle Cannot Be Started From D_1" ❏ AT-191, "A/T Does Not Shift: $D_1 \rightarrow D_2$" ❏ AT-193, "A/T Does Not Shift: $D_2 \rightarrow D_3$" ❏ AT-195, "A/T Does Not Shift: $D_3 \rightarrow D_4$" ❏ AT-197, "A/T Does Not Shift: $D_4 \rightarrow D_5$" ❏ AT-199, "A/T Does Not Perform Lock-up" ❏ AT-201, "A/T Does Not Hold Lock-up Condition" ❏ AT-203, "Lock-up Is Not Released" ❏ AT-204, "Engine Speed Does Not Return to Idle"		

4	4-3	Part 2		AT-61
		❏ AT-189, "Vehicle Cannot Be Started From D_1" ❏ AT-191, "A/T Does Not Shift: $D_1 \rightarrow D_2$" ❏ AT-193, "A/T Does Not Shift: $D_2 \rightarrow D_3$" ❏ AT-195, "A/T Does Not Shift: $D_3 \rightarrow D_4$"		
		Part 3		AT-62
		❏ AT-206, "A/T Does Not Shift: 5th gear → 4th gear" ❏ AT-208, "A/T Does Not Shift: 4th gear → 3rd gear" ❏ AT-210, "A/T Does Not Shift: 3rd gear → 2nd gear" ❏ AT-212, "A/T Does Not Shift: 2nd gear → 1st gear" ❏ AT-214, "Vehicle Does Not Decelerate By Engine Brake" ❏ Perform self-diagnostics Enter checks for detected items. AT-90		
			❏ AT-98, "DTC U1000 CAN COMMUNICATION LINE" ❏ AT-101, "DTC P0615 START SIGNAL CIRCUIT" ❏ AT-105, "DTC P0700 TCM" ❏ AT-106, "DTC P0705 PARK/NEUTRAL POSITION SWITCH" ❏ AT-110, "DTC P0717 TURBINE REVOLUTION SENSOR" ❏ AT-112, "DTC P0720 VEHICLE SPEED SENSOR A/T (REVOLUTION SENSOR)" ❏ AT-117, "DTC P0725 ENGINE SPEED SIGNAL" ❏ AT-119, "DTC P0740 TORQUE CONVERTER CLUTCH SOLENOID VALVE" ❏ AT-121, "DTC P0744 A/T TCC S/V FUNCTION (LOCK-UP)" ❏ AT-123, "DTC P0745 LINE PRESSURE SOLENOID VALVE" ❏ AT-125, "DTC P1705 THROTTLE POSITION SENSOR" ❏ AT-128, "DTC P1710 A/T FLUID TEMPERATURE SENSOR CIRCUIT" ❏ AT-133, "DTC P1721 VEHICLE SPEED SENSOR MTR" ❏ AT-135, "DTC P1730 A/T INTERLOCK" ❏ AT-138, "DTC P1731 A/T 1ST ENGINE BRAKING" ❏ AT-140, "DTC P1752 INPUT CLUTCH SOLENOID VALVE" ❏ AT-142, "DTC P1754 INPUT CLUTCH SOLENOID VALVE FUNCTION" ❏ AT-144, "DTC P1757 FRONT BRAKE SOLENOID VALVE" ❏ AT-146, "DTC P1759 FRONT BRAKE SOLENOID VALVE FUNCTION" ❏ AT-148, "DTC P1762 DIRECT CLUTCH SOLENOID VALVE" ❏ AT-150, "DTC P1764 DIRECT CLUTCH SOLENOID VALVE FUNCTION" ❏ AT-152, "DTC P1767 HIGH AND LOW REVERSE CLUTCH SOLENOID VALVE" ❏ AT-154, "DTC P1769 HIGH AND LOW REVERSE CLUTCH SOLENOID VALVE FUNCTION" ❏ AT-156, "DTC P1772 LOW COAST BRAKE SOLENOID VALVE" ❏ AT-158, "DTC P1774 LOW COAST BRAKE SOLENOID VALVE FUNCTION" ❏ AT-160, "DTC P1841 ATF PRESSURE SWITCH 1" ❏ AT-162, "DTC P1843 ATF PRESSURE SWITCH 3" ❏ AT-164, "DTC P1845 ATF PRESSURE SWITCH 5" ❏ AT-166, "DTC P1846 ATF PRESSURE SWITCH 6"	
5	❏ Inspect each system for items found to be NG in the self-diagnostics and repair or replace the malfunction parts.			
6	❏ Perform all road tests and enter the checks again for the required items.			AT-57
7	❏ For any remaining NG items, perform the “diagnostics procedure” and repair or replace the malfunction parts. See the chart for diagnostics by symptoms. (This chart also contains other symptoms and inspection procedures.)			AT-65
8	❏ Erase the results of the self-diagnostics from the TCM.			AT-41

A/T Electrical Parts Location

ECS00CMQ

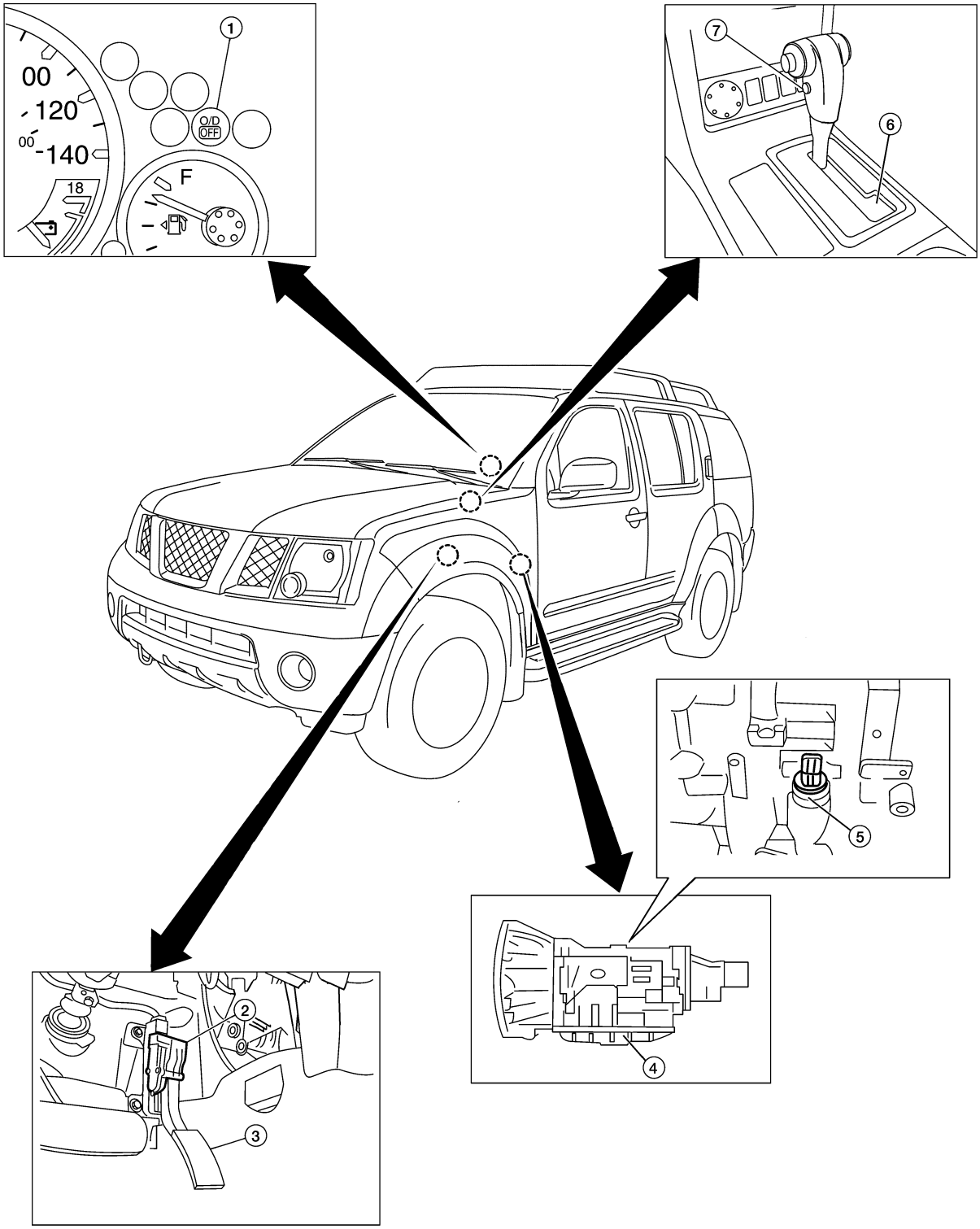

WCIA0526E

1	O/D OFF indicator lamp.	2	Accelerator pedal position sensor.	3	Accelerator pedal.
4	Control valve with TCM.	5	A/T assembly harness connector.	6	1st position switch.
7	Overdrive control switch				

NOTE:
The following components are integral to control valve with TCM (4).

- TCM
- Turbine revolution sensor 1,2
- Revolution sensor
- A/T fluid temperature sensor 1,2
- PNP switch
- Line pressure solenoid valve
- Torque converter clutch solenoid valve
- Direct clutch solenoid valve, ATF Pressure SW 5
- High and low reverse clutch solenoid valve, ATF Pressure SW 6
- Input clutch solenoid valve, ATF Pressure SW 3
- Front brake solenoid valve, ATF Pressure SW 1
- Low coast brake solenoid valve, ATF Pressure SW 2

Schematic

ECS00CMR

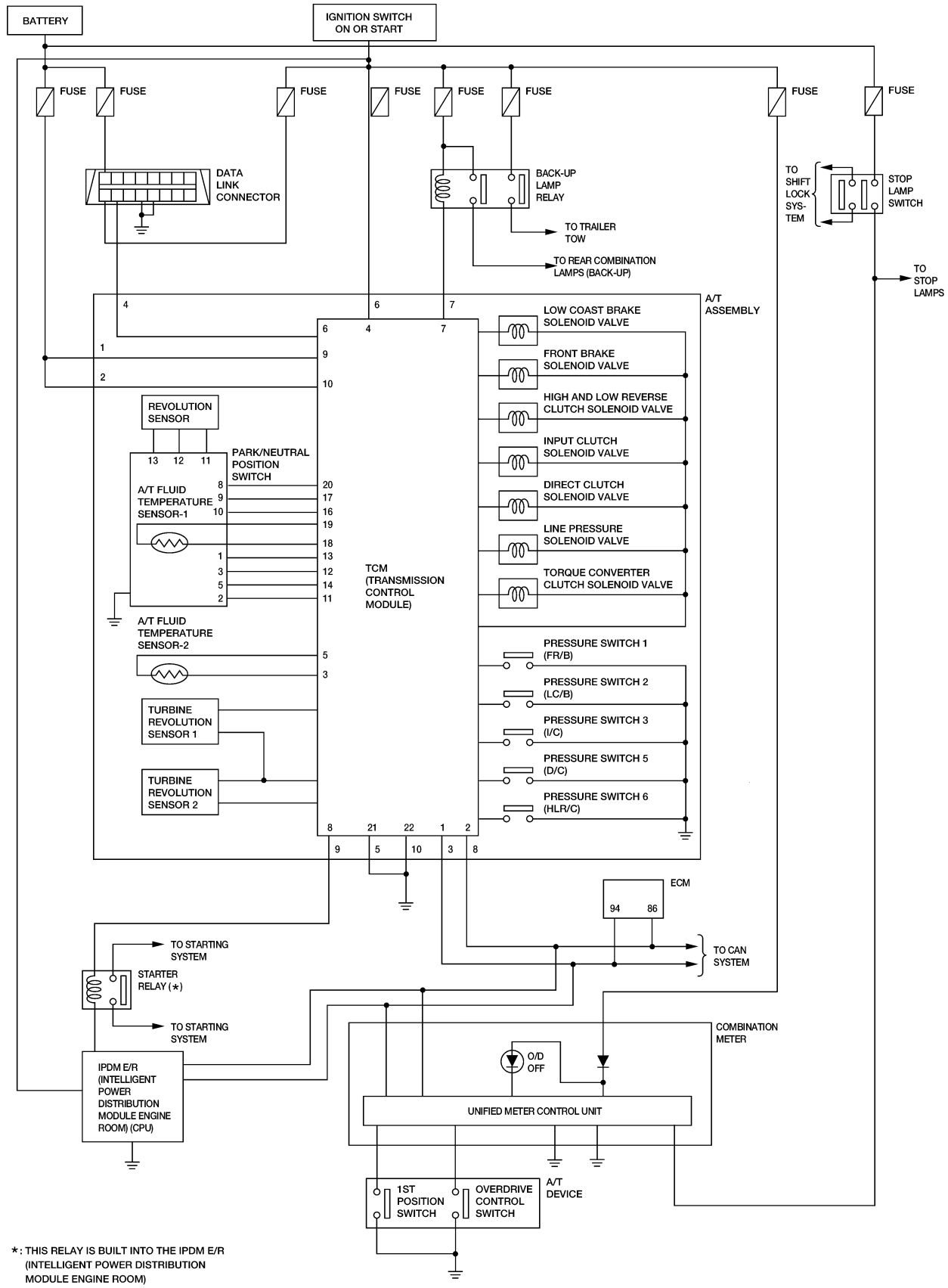

Inspections Before Trouble Diagnosis

ECS00CMS

A/T FLUID CHECK

Fluid Leakage and Fluid Level Check

- Inspect for fluid leakage and check the fluid level. Refer to AT-15, "Changing the A/T Fluid (ATF)" .

Fluid Condition Check

Inspect the fluid condition.

Fluid condition	Conceivable Cause	Required Operation
Varnished (viscous varnish state)	Clutch, brake scorched	Replace the ATF and check the A/T main unit and the vehicle for mal-functions (wire harnesses, cooler pipes, etc.)
Milky white or cloudy	Water in the fluid	Replace the ATF and check for places where water is getting in.
Large amount of metal powder mixed in	Unusual wear of sliding parts within A/T	Replace the ATF and check for improper operation of the A/T.

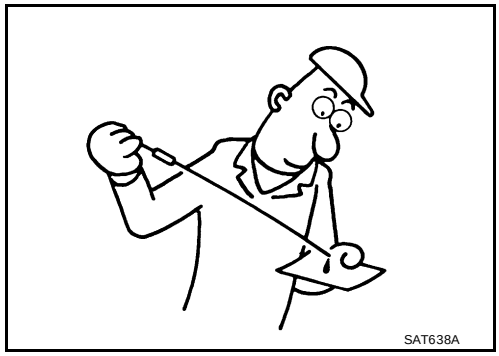

STALL TEST

Stall Test Procedure

1. Inspect the amount of engine oil. Replenish the engine oil if necessary.
2. Drive for about 10 minutes to warm up the vehicle so that the A/T fluid temperature is 50 to 80°C (122 to 176°F). Inspect the amount of ATF. Replenish if necessary.

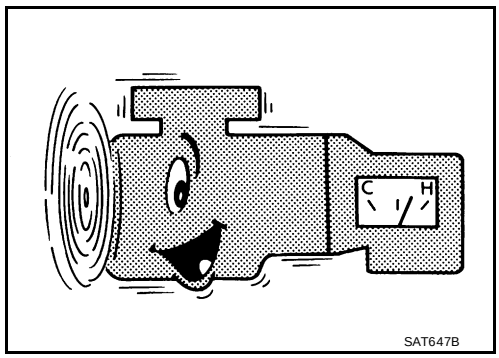

3. Securely engage the parking brake so that the tires do not turn.

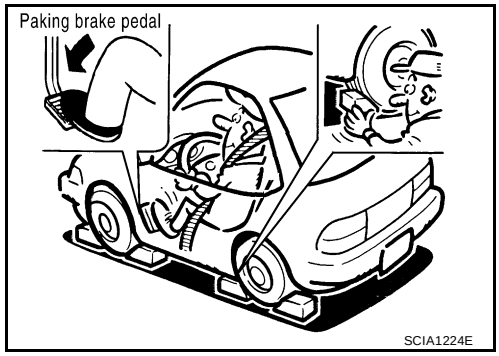

4. Engine start, apply foot brake, and place selector lever in “D” position.
5. While holding down the foot brake, gradually press down the accelerator pedal.
6. Quickly read off the stall speed, then quickly remove your foot from the accelerator pedal.

   CAUTION:
   Do not hold down the accelerator pedal for more than 5 seconds during this test.

   Stall speed: 2,200 - 2,500 rpm

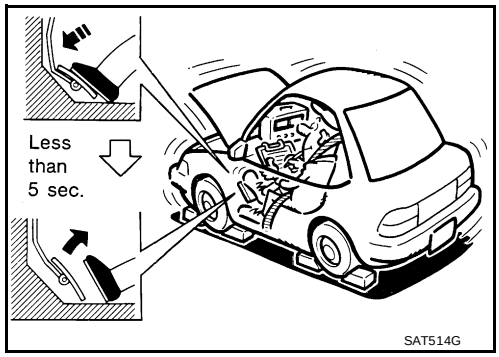

7. Move the selector lever to the “N” position.
8. Cool down the ATF.

   CAUTION:
   Run the engine at idle for at least one minute.
9. Repeat steps 5 through 8 with selector lever in “3”, “2”, “1” and “R” positions.

Judgement of Stall Test

	Selector lever position		Expected malfunction location
	D, 3, 2, 1	R	
Stall rotation	H	O	● Forward brake ● Forward one-way clutch ● 1st one-way clutch ● 3rd one-way clutch
	O	H	● Reverse brake
	L	L	● Engine and torque converter one-way clutch
	H	H	● Line pressure low

O: Stall speed within standard value position
H: Stall speed higher than standard value
L: Stall speed lower than standard value

Stall test standard value position

Does not shift-up D position 1 → 2	Slipping in 2nd, 3rd, 4th gears	Direct clutch slippage
Does not shift-up D position 2 → 3	Slipping in 3rd, 4th, 5th gears	High and low reverse clutch slippage
Does not shift-up D position 3 → 4	Slipping in 4th, 5th gears	Input clutch slippage
Does not shift-up D position 4 → 5	Slipping in 5th gear	Front brake slippage

LINE PRESSURE TEST

Line Pressure Test Port

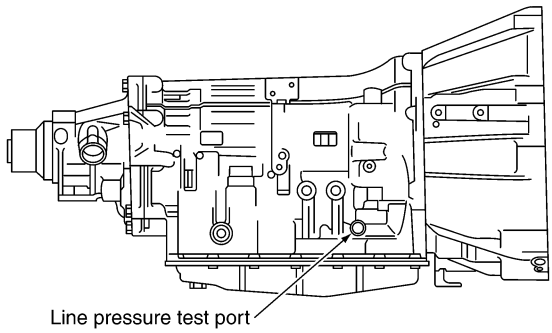

Line Pressure Test Procedure

1. Inspect the amount of engine oil and replenish if necessary.
2. Drive the car for about 10 minutes to warm it up so that the ATF reaches in range of 50 to 80°C (122 to 176°F), then inspect the amount of ATF and replenish if necessary.

   NOTE:
   The automatic fluid temperature rises in range of 50 to 80°C (122 to 176°F) during 10 minutes of driving.

3. After warming up remove the oil pressure detection plug and install the oil pressure gauge [ST2505S001(J-34301-C)].

   CAUTION:
   When using the oil pressure gauge, be sure to use the O-ring attached to the oil pressure detection plug.

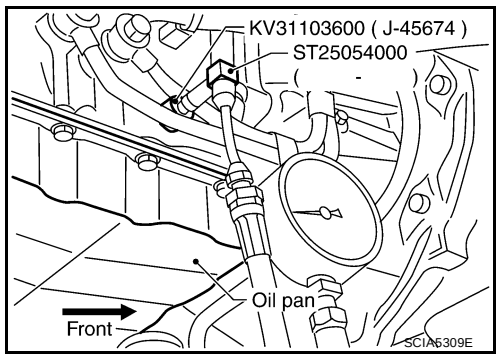

4. Securely engage the parking brake so that the tires do not turn.

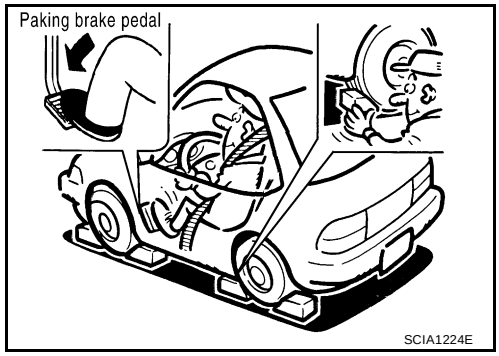

5. Start the engine, then measure the line pressure at both idle and the stall speed.

   CAUTION:
   - **Keep the brake pedal pressed all the way down during measurement.**
   - **When measuring the line pressure at the stall speed, refer to AT-54, "STALL TEST" .**

6. After the measurements are complete, install the oil pressure detection plug and tighten to the regulation torque below.

   :7.3 N·m (0.74 kg-m, 65 in-lb)

   CAUTION:
   - **Do not reuse the O-ring.**
   - **Apply ATF to O-ring.**

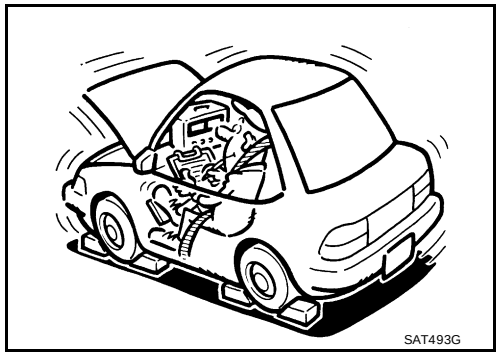

Line Pressure

Engine speed	Line pressure [kPa (kg/cm^2 , psi)]	
	"R" position	"D" position
At idle speed	392 - 441 (4.0 - 4.5, 57 - 64)	373 - 422 (3.8 - 4.3, 54 - 61)
At stall speed	1,700 - 1,890 (17.3 - 19.3, 247 - 274)	1,310 - 1,500 (13.3 - 15.3, 190 - 218)

Judgement of Line Pressure Test

Judgement		Possible cause
Idle speed	Low for all positions (P, R, N, D)	Possible causes include malfunctions in the pressure supply system and low oil pump output. For example ● Oil pump wear ● Pressure regulator valve or plug sticking or spring fatigue ● Oil strainer ⇒ oil pump ⇒ pressure regulator valve passage oil leak ● Engine idle speed too low
	Only low for a specific position	Possible causes include an oil pressure leak in a passage or device related to the position after the pressure is distributed by the manual valve.
	High	Possible causes include a sensor malfunction or malfunction in the line pressure adjustment function. For example ● Accelerator pedal position signal malfunction ● ATF temperature sensor malfunction ● Line pressure solenoid malfunction (sticking in “OFF” state, filter clog, cut line) ● Pressure regulator valve or plug sticking
Stall speed	Oil pressure does not rise higher than the oil pressure for idle.	Possible causes include a sensor malfunction or malfunction in the pressure adjustment function. For example ● Accelerator pedal position signal malfunction ● TCM breakdown ● Line pressure solenoid malfunction (shorting, sticking in“ ON” state) ● Pressure regulator valve or plug sticking ● Pilot valve sticking or pilot filter clogged
	The pressure rises, but does not enter the standard position.	Possible causes include malfunctions in the pressure supply system and malfunction in the pressure adjustment function. For example ● Accelerator pedal position signal malfunction ● Line pressure solenoid malfunction (sticking, filter clog) ● Pressure regulator valve or plug sticking ● Pilot valve sticking or pilot filter clogged
	Only low for a specific position	Possible causes include an oil pressure leak in a passage or device related to the position after the pressure is distributed by the manual valve.

ROAD TEST

Description

- The road test inspects overall performance of the A/T and analyzes possible malfunction causes.
- The road test is carried out in the following three stages.

1. Check before engine is started. Refer to AT-58 .
2. Check at idle. Refer to AT-58 .
3. Cruise test
   - Inspect all the items from Part 1 to Part 3. Refer to AT-59 , AT-61 , AT-62 .

- Before beginning the road test, check the test procedure and inspection items.
- Test all inspection items until the symptom is uncovered. Diagnose NG items when all road tests are complete.

Check Before Engine is Started

ECS00CMT

1. CHECK O/D OFF INDICATOR LAMP

1. Park vehicle on level surface.
2. Move selector lever to “P” position.
3. Turn ignition switch to “OFF” position and wait at least 10 seconds.
4. Turn ignition switch to “ON” position. (Do not start engine.)

Does O/D OFF indicator lamp light up for about 2 seconds?

YES >> GO TO 2.
NO >> 1. Turn ignition switch to “OFF” position.
2. Carry out the self-diagnostics and record all NG items on the diagnostics worksheet. Refer to AT-90 .
3. Go to AT-58, "Check at Idle" .

Check at Idle

ECS00CMU

1. CHECK STARTING THE ENGINE

1. Park vehicle on level surface.
2. Move selector lever to “P” or “N” position.
3. Turn ignition switch to “OFF” position.
4. Turn ignition switch to “START” position.

Does the engine start?

YES >> GO TO 2.
NO >> Stop the road test and go to AT-179, "Engine Cannot Be Started In “P” or “N” Position" .

2. CHECK STARTING THE ENGINE

1. Turn ignition switch to “ON” position.
2. Move selector lever in “D”, “3”, “2”, “1” or “R” position.
3. Turn ignition switch to “START” position.

Does the engine start in either position?

YES >> Stop the road test and go to AT-179, "Engine Cannot Be Started In “P” or “N” Position" .
NO >> GO TO 3.

3. CHECK “P” POSITION FUNCTIONS

1. Move selector lever to “P” position.
2. Turn ignition switch to “OFF” position.
3. Release the parking brake.
4. Push the vehicle forward or backward.
5. Engage the parking brake.

When you push the vehicle with disengaging the parking brake, does it move?

YES >> Enter a check mark at “In “P” Position Vehicle Moves When Pushed” on the diagnostics worksheet, then continue the road test.
NO >> GO TO 4.

4. CHECK “N” POSITION FUNCTIONS

1. Start the engine.
2. Move selector lever to “N” position.
3. Release the parking brake.

Does vehicle move forward or backward?

YES >> Enter a check mark at “In “N” Position Vehicle Moves” on the diagnostics worksheet, then continue the road test.
NO >> GO TO 5.

5. CHECK SHIFT SHOCK

1. Engage the brake.
2. Move selector lever to “D” position.

When the transmission is shifted from “N” to “D”, is there an excessive shock?

YES >> Enter a check mark at “Large Shock (“N” to “D” Position)” on the diagnostics worksheet, then continue the road test.
NO >> GO TO 6.

6. CHECK “R” POSITION FUNCTIONS

1. Engage the brake.
2. Move selector lever to “R” position.
3. Release the brake for 4 to 5 seconds.

Does the vehicle creep backward?

YES >> GO TO 7.
NO >> Enter a check mark at “Vehicle Does Not Creep Backward In “R” Position” on the diagnostics worksheet, then continue the road test.

7. CHECK “D” POSITION FUNCTIONS

Inspect whether the vehicle creep forward when the transmission is put into the “D” position.

Does the vehicle creep forward in the “D” positions?

YES >> Go to AT-59, "Cruise Test - Part 1" , AT-61, "Cruise Test - Part 2" and AT-62, "Cruise Test - Part 3" .
NO >> Enter a check mark at “Vehicle Does Not Creep Forward In “D” Positions” on the diagnostics worksheet, then continue the road test.

Cruise Test - Part 1

ECS00CMV

1. CHECK STARTING OUT FROM D1

1. Drive the vehicle for about 10 minutes to warm up the engine oil and ATF.
   Appropriate temperature for the ATF: 50 - 80°C (122 - 176°F)
2. Park the vehicle on a level surface.
3. Move selector lever to “P” position.
4. Start the engine.
5. Set overdrive control switch to ON position.
6. Move selector lever to “D” position.
7. Press the accelerator pedal about half way down to accelerate the vehicle.

With CONSULT-II

Read off the gear positions.

Starts from D1?

YES >> GO TO 2.
NO >> Enter a check mark at “Vehicle Cannot Be Started From D1” on the diagnostics worksheet, then continue the road test.

2. CHECK SHIFT-UP D1 → D2

Press down the accelerator pedal about half way and inspect if the vehicle shifts up (D1 → D2) at the appropriate speed.

- Refer to AT-64, "Vehicle Speed at Which Gear Shifting Occurs" .

With CONSULT-II

Read the gear position, throttle degree of opening, and vehicle speed.

Does the A/T shift-up D1 → D2 at the correct speed?

YES >> GO TO 3.
NO >> Enter a check mark at “A/T Does Not Shift: D1 → D2” on the diagnostics worksheet, then continue the road test.

3. CHECK SHIFT-UP D2 → D3

Press down the accelerator pedal about half way and inspect if the vehicle shifts up (D2 → D3) at the appropriate speed.

- Refer to AT-64, "Vehicle Speed at Which Gear Shifting Occurs" .

With CONSULT-II

Read the gear position, throttle degree of opening, and vehicle speed.

Does the A/T shift-up D2 → D3 at the correct speed?

YES >> GO TO 4.
NO >> Enter a check mark at “A/T Does Not Shift: D2 → D3” on the diagnostics worksheet, then continue the road test.

4. CHECK SHIFT-UP D3 → D4

Press down the accelerator pedal about half way and inspect if the vehicle shifts up (D3 → D4) at the appropriate speed.

- Refer to AT-64, "Vehicle Speed at Which Gear Shifting Occurs" .

With CONSULT-II

Read the gear position, throttle degree of opening, and vehicle speed.

Does the A/T shift-up D3 → D4 at the correct speed?

YES >> GO TO 5.
NO >> Enter a check mark at “A/T Does Not Shift: D3 → D4” on the diagnostics worksheet, then continue the road test.

5. CHECK SHIFT-UP D4 → D5

Press down the accelerator pedal about half way and inspect if the vehicle shifts up (D4 → D5) at the appropriate speed.

- Refer to AT-64, "Vehicle Speed at Which Gear Shifting Occurs" .

With CONSULT-II

Read the gear position, throttle degree of opening, and vehicle speed.

Does the A/T shift-up D4 → D5 at the correct speed?

YES >> GO TO 6.
NO >> Enter a check mark at “A/T Does Not Shift: D4 → D5” on the diagnostics worksheet, then continue the road test.

6. CHECK LOCK-UP

When releasing accelerator pedal from D5 (closed throttle position signal: OFF), check lock-up from D5 to L/U.

- Refer to AT-64, "Vehicle Speed at Which Gear Shifting Occurs" .

With CONSULT-II

Select “TCC SOLENOID” with the “MAIN SIGNAL” mode for A/T.

Does it lock-up?

YES >> GO TO 7.

NO >> Enter a check mark at “A/T Does Not Perform Lock-up” on the diagnostics worksheet, then continue the road test.

7. CHECK LOCK-UP HOLD

Check hold lock-up.

With CONSULT-II

Select “TCC SOLENOID” with the “MAIN SIGNAL” mode for A/T.

Does it maintain lock-up status?

YES >> GO TO 8.

NO >> Enter a check mark at “A/T Does Not Hold Lock-up Condition” on the diagnostics worksheet, then continue the road test.

8. CHECK LOCK-UP RELEASE

Check lock-up cancellation by depressing brake pedal lightly to decelerate.

With CONSULT-II

Select “TCC SOLENOID” with the “MAIN SIGNAL” mode for A/T.

Does lock-up cancel?

YES >> GO TO 9.

NO >> Enter a check mark at “Lock-up Is Not Released” on the diagnostics worksheet, then continue the road test.

9. CHECK SHIFT-DOWN D5 → D4

Decelerate by pressing lightly on the brake pedal.

With CONSULT-II

Read the gear position and engine speed.

When the A/T shift-down D5 → D4, does the engine speed drop smoothly back to idle?

YES >> 1. Stop the vehicle.
2. Go to Cruise test - Part 2 (Refer to AT-61).

NO >> Enter a check mark at “Engine Speed Does Not Return to Idle” on the diagnostics worksheet, then continue the road test. Go to Cruise test - Part 2 (Refer to AT-61).

Cruise Test - Part 2

ECS00CMW

1. CHECK STARTING FROM D1

1. Move selector lever to “D” position.
2. Accelerate at half throttle.

With CONSULT-II

Read the gear position.

Does it start from D1?

YES >> GO TO 2.

NO >> Enter a check mark at “Vehicle Cannot Be Started From D1” on the diagnostics worksheet, then continue the road test.

2. CHECK SHIFT-UP D1 → D2

Press the accelerator pedal down all the way and inspect whether or not the transmission shifts up (D1 → D2) at the correct speed.

- Refer to AT-64, "Vehicle Speed at Which Gear Shifting Occurs" .

With CONSULT-II

Read the gear position, throttle position and vehicle speed.

Does the A/T shift-up D1 → D2 at the correct speed?

YES >> GO TO 3.

NO >> Enter a check mark at "A/T Does Not Shift: D1 → D2" on the diagnostics worksheet, then continue the road test.

3. CHECK SHIFT-UP D2 → D3

Press the accelerator pedal down all the way and inspect whether or not the transmission shifts up (D2 → D3) at the correct speed.

- Refer to AT-64, "Vehicle Speed at Which Gear Shifting Occurs" .

With CONSULT-II

Read the gear position, throttle position and vehicle speed.

Does the A/T shift-up D2 → D3 at the correct speed?

YES >> GO TO 4.

NO >> Enter a check mark at "A/T Does Not Shift: D2 → D3" on the diagnostics worksheet, then continue the road test.

4. CHECK SHIFT-UP D3 → D4 AND ENGINE BRAKE

When the transmission changes speed D3 → D4, return the accelerator pedal.

With CONSULT-II

Read the gear position.

Does the A/T shift-up D3 → D4 and apply the engine brake?

YES >> 1. Stop the vehicle.

2. See AT-62, "Cruise Test - Part 3" .

NO >> Enter a check mark at "A/T Does Not Shift: D3 → D4" on the diagnostics worksheet, then continue the road test.

Cruise Test - Part 3

ECS00CMX

1. CHECK SHIFT-DOWN

1. Confirm overdrive control switch is ON position.
2. Confirm gear selector lever is in "D" position.
3. Accelerate vehicle using half-throttle to D_5 .
4. Release accelerator pedal.
5. Set overdrive control switch to OFF position while driving in D_5 .

   With CONSULT-II

   Read the gear position.

Does A/T shift from D_5 to D_4 (O/D OFF)?

YES >> GO TO 2.

NO >> Enter a check mark at "A/T does not shift: 5th gear → 4th gear" on the diagnostics worksheet, then continue the road test.

2. CHECK SHIFT-DOWN

During D_4 driving, move gear selector from D → 3 → 2 → 1.

With CONSULT-II

Read the gear position.

Is downshifting correctly performed?

YES >> GO TO 3.

NO >> Enter a check mark at “A/T does not shift” at the corresponding position (4th → 3rd, 3rd → 2nd, 2nd → 1st) on the diagnostics worksheet, then continue the road test.

3. CHECK ENGINE BRAKE

Does engine braking effectively reduce speed in 1_1 position?

YES >> 1. Stop the vehicle.

2. Carry out the self-diagnostics. Refer to AT-90, "SELF-DIAGNOSTIC RESULT MODE" .

NO >> Enter a check mark at “Vehicle Does Not Decelerate By Engine Brake” on the diagnostics worksheet, then continue trouble diagnosis.

Vehicle Speed at Which Gear Shifting Occurs

ECS00CMY

2WD MODELS

Throttle position	Vehicle speed km/h (MPH)							
	$D_1 \rightarrow D_2$	$D_2 \rightarrow D_3$	$D_3 \rightarrow D_4$	$D_4 \rightarrow D_5$	$D_5 \rightarrow D_4$	$D_4 \rightarrow D_3$	$D_3 \rightarrow D_2$	$D_2 \rightarrow D_1$
Full throttle	60 - 74 (37 - 46)	99 - 119 (62 - 74)	153 - 183 (95 - 114)	234 - 267 (145 - 166)	230 - 264 (143 - 164)	142 - 171 (88 - 106)	87 - 104 (54 - 65)	41 - 48 (25 - 30)
Half throttle	49 - 59 (30 - 37)	80 - 96 (50 - 60)	123 - 149 (76 - 93)	152 - 178 (94 - 111)	115 - 138 (71 - 86)	71 - 86 (44 - 53)	51 - 61 (32 - 38)	12 - 14 (7 - 9)

- At half throttle, the accelerator opening is 4/8 of the full opening.

4WD MODELS

Throttle position	Vehicle speed km/h (MPH)							
	$D_1 \rightarrow D_2$	$D_2 \rightarrow D_3$	$D_3 \rightarrow D_4$	$D_4 \rightarrow D_5$	$D_5 \rightarrow D_4$	$D_4 \rightarrow D_3$	$D_3 \rightarrow D_2$	$D_2 \rightarrow D_1$
Full throttle	60 - 68 (37 - 42)	99 - 110 (62 - 68)	153 - 170 (95 - 106)	234 - 259 (145 - 161)	230 - 255 (143 - 158)	142 - 158 (88 - 98)	87 - 97 (54 - 60)	41 - 47 (25 - 29)
Half throttle	49 - 55 (30 - 34)	80 - 90 (50 - 56)	123 - 137 (76 - 85)	152 - 168 (94 - 104)	115 - 128 (71 - 80)	71 - 79 (44 - 49)	51 - 57 (32 - 35)	12 - 14 (7 - 9)

- At half throttle, the accelerator opening is 4/8 of the full opening.

Vehicle Speed at Which Lock-up Occurs/Releases

ECS00CMZ

2WD MODELS

Throttle position	Vehicle speed km/h (MPH)	
	Lock-up “ON”	Lock-up “OFF”
Closed throttle	78 - 93 (48 - 58)	68 - 82 (42 - 51)
Half throttle	188 - 218 (117 - 135)	147 - 175 (91 - 109)

- At closed throttle, the accelerator opening is less than 1/8 condition. (Closed throttle position signal: OFF)
- At half throttle, the accelerator opening is 4/8 of the full opening.

4WD MODELS

Throttle position	Vehicle speed km/h (MPH)	
	Lock-up “ON”	Lock-up “OFF”
Closed throttle	78 - 87 (48 - 54)	68 - 76 (42 - 47)
Half throttle	188 - 208 (117 - 129)	147 - 163 (91 - 101)

- At closed throttle, the accelerator opening is less than 1/8 condition. (Closed throttle position signal: OFF)
- At half throttle, the accelerator opening is 4/8 of the full opening.

Symptom Chart

ECS00CN0

- **The diagnostics item numbers show the sequence for inspection. Inspect in order from item 1.**
- **Overhaul and inspect inside the A/T only if A/T fluid condition is NG. Refer to** AT-54, "Fluid Condition Check" .

No.	Items	Symptom	Condition	Diagnostic Item	Reference page
1	Shift Shock	Large shock. (“N” →“ D” position) Refer to AT-182, "Large Shock (“N” to “D” Position)" .	ON vehicle	1. Engine idle speed	EC-76
				2. Engine speed signal	AT-117
				3. Accelerator pedal position sensor	AT-125
				4. Control cable adjustment	AT-217
				5. ATF temperature sensor	AT-128
				6. ATF pressure switch 1 and front brake solenoid valve	AT-160, AT-144
				7. CAN communication line	AT-98
				8. Fluid level and state	AT-54
				9. Line pressure test	AT-55
				10. Control valve with TCM	AT-229
			OFF vehicle	11. Forward brake (Parts behind drum support is impossible to perform inspection by disassembly. Refer to AT-19 .)	AT-259
2		Shock is too large when changing D_1 → D_2 .	ON vehicle	1. Accelerator pedal position sensor	AT-125
				2. Control cable adjustment	AT-217
				3. ATF pressure switch 5 and direct clutch solenoid valve	AT-164, AT-148
				4. CAN communication line	AT-98
				5. Engine speed signal	AT-117
				6. Turbine revolution sensor	AT-110
				7. Vehicle speed sensor A/T and vehicle speed sensor MTR	AT-112, AT-133
				8. Fluid level and state	AT-54
				9. Control valve with TCM	AT-228
			OFF vehicle	10. Direct clutch	AT-295
3		Shock is too large when changing D_2 → D_3 .	ON vehicle	1. Accelerator pedal position sensor	AT-125
				2. Control cable adjustment	AT-217
				3. ATF pressure switch 6, high and low reverse clutch sole-noid valve	AT-166, AT-152
				4. CAN communication line	AT-98
				5. Engine speed signal	AT-117
				6. Turbine revolution sensor	AT-110
				7. Vehicle speed sensor A/T and vehicle speed sensor MTR	AT-112, AT-133
				8. Fluid level and state	AT-54
				9. Control valve with TCM	AT-228
			OFF vehicle	10. High and low reverse clutch	AT-293

No.	Items	Symptom	Condition	Diagnostic Item	Reference page
4	Shift Shock	Shock is too large when changing D3 → D4 .	ON vehicle	1. Accelerator pedal position sensor	AT-125
				2. Control cable adjustment	AT-217
				3. ATF pressure switch 3 and input clutch solenoid valve	AT-162, AT-140
				4. CAN communication line	AT-98
				5. Engine speed signal	AT-117
				6. Turbine revolution sensor	AT-110
				7. Vehicle speed sensor A/T and vehicle speed sensor MTR	AT-112, AT-133
				8. Fluid level and state	AT-54
				9. Control valve with TCM	AT-228
			OFF vehicle	10. Input clutch	AT-282
5		Shock is too large when changing D4 → D5 .	ON vehicle	1. Accelerator pedal position sensor	AT-125
				2. Control cable adjustment	AT-217
				3. ATF pressure switch 1 and front brake solenoid valve	AT-160, AT-144
				4. CAN communication line	AT-98
				5. Engine speed signal	AT-117
				6. Turbine revolution sensor	AT-110
				7. Vehicle speed sensor A/T and vehicle speed sensor MTR	AT-112, AT-133
				8. Fluid level and state	AT-54
				9. Control valve with TCM	AT-228
			OFF vehicle	10. Front brake (brake band)	AT-247
				11. Input clutch	AT-282
6		Shock is too large for downshift when accelerator pedal is pressed.	ON vehicle	1. Accelerator pedal position sensor	AT-125
				2. Control cable adjustment	AT-217
				3. CAN communication line	AT-98
				4. Engine speed signal	AT-117
				5. Turbine revolution sensor	AT-110
				6. Vehicle speed sensor A/T and vehicle speed sensor MTR	AT-112, AT-133
				7. Fluid level and state	AT-54
				8. Control valve with TCM	AT-228
			OFF vehicle	9. Front brake (brake band)	AT-247
				10. Input clutch	AT-282
				11. High and low reverse clutch	AT-293
				12. Direct clutch	AT-295

No.	Items	Symptom	Condition	Diagnostic Item	Reference page
7	Shift Shock	Shock is too large for upshift when accelerator pedal is released.	ON vehicle	1. Accelerator pedal position sensor	AT-125
				2. Control cable adjustment	AT-217
				3. Engine speed signal	AT-117
				4. CAN communication line	AT-98
				5. Turbine revolution sensor	AT-110
				6. Vehicle speed sensor A/T and vehicle speed sensor MTR	AT-112, AT-133
				7. Fluid level and state	AT-54
				8. Control valve with TCM	AT-228
			OFF vehicle	9. Front brake (brake band)	AT-247
				10. Input clutch	AT-282
				11. High and low reverse clutch	AT-293
				12. Direct clutch	AT-295
8		Shock is too large for lock-up.	ON vehicle	1. Accelerator pedal position sensor	AT-125
				2. Control cable adjustment	AT-217
				3. Engine speed signal	AT-117
				4. CAN communication line	AT-98
				5. Turbine revolution sensor	AT-110
				6. Vehicle speed sensor A/T and vehicle speed sensor MTR	AT-112, AT-133
				7. Torque converter clutch solenoid valve	AT-119
				8. Fluid level and state	AT-54
				9. Control valve with TCM	AT-228
			OFF vehicle	10. Torque converter	AT-259
9		Shock is too large during engine brake.	ON vehicle	1. Accelerator pedal position sensor	AT-125
				2. Control cable adjustment	AT-217
				3. CAN communication line	AT-98
				4. Fluid level and state	AT-54
				5. Control valve with TCM	AT-228
			OFF vehicle	6. Front brake (brake band)	AT-247
				7. Input clutch	AT-282
				8. High and low reverse clutch	AT-293
				9. Direct clutch	AT-295

No.	Items	Symptom	Condition	Diagnostic Item	Reference page
10	No Up Shift	Gear does not change from $D_1 \rightarrow D_2$. Refer to AT-191, "A/T Does Not Shift: $D_1 \rightarrow D_2$".	ON vehicle	1. Fluid level and state	AT-54
				2. Vehicle speed sensor A/T and vehicle speed sensor MTR	AT-112, AT-133
				3. ATF pressure switch 5 and direct clutch solenoid valve	AT-164, AT-148
				4. Line pressure test	AT-55
				5. CAN communication line	AT-98
				6. Control valve with TCM	AT-228
			OFF vehicle	7. Direct clutch	AT-295
11		Gear does not change from $D_2 \rightarrow D_3$. Refer to AT-193, "A/T Does Not Shift: $D_2 \rightarrow D_3$".	ON vehicle	1. Fluid level and state	AT-54
				2. Vehicle speed sensor A/T and vehicle speed sensor MTR	AT-112, AT-133
				3. ATF pressure switch 6, high and low reverse clutch sole-noid valve	AT-166, AT-152
				4. Line pressure test	AT-55
				5. CAN communication line	AT-98
				6. Control valve with TCM	AT-228
			OFF vehicle	7. High and low reverse clutch	AT-293
12		Gear does not change from $D_3 \rightarrow D_4$. Refer to AT-195, "A/T Does Not Shift: $D_3 \rightarrow D_4$".	ON vehicle	1. Fluid level and state	AT-54
				2. Vehicle speed sensor A/T and vehicle speed sensor MTR	AT-112, AT-133
				3. ATF pressure switch 3 and input clutch solenoid valve	AT-162, AT-140
				4. ATF pressure switch 1 and front brake solenoid valve	AT-160, AT-144
				5. Line pressure test	AT-55
				6. CAN communication line	AT-98
				7. Control valve with TCM	AT-228
			OFF vehicle	8. Input clutch	AT-282
13		Gear does not change from $D_4 \rightarrow D_5$. Refer to AT-197, "A/T Does Not Shift: $D_4 \rightarrow D_5$".	ON vehicle	1. Fluid level and state	AT-54
				2. Vehicle speed sensor A/T and vehicle speed sensor MTR	AT-112, AT-133
				3. ATF pressure switch 1 and front brake solenoid valve	AT-160, AT-144
				4. ATF pressure switch 5 and direct clutch solenoid valve	AT-164, AT-148
				5. Turbine revolution sensor	AT-110
				6. Line pressure test	AT-55
				7. CAN communication line	AT-98
				8. Control valve with TCM	AT-228
			OFF vehicle	9. Front brake (brake band)	AT-259
				10. Input clutch	AT-282

No.	Items	Symptom	Condition	Diagnostic Item	Reference page
14	No Down Shift	In “D” range, does not downshift to 4th gear. Refer to AT-206, "A/T Does Not Shift: 5th gear → 4th gear" .	ON vehicle	1. Fluid level and state	AT-54
				2. Vehicle speed sensor A/T and vehicle speed sensor MTR	AT-112, AT-133
				3. ATF pressure switch 1 and front brake solenoid valve	AT-160, AT-144
				4. ATF pressure switch 5 and direct clutch solenoid valve	AT-164, AT-148
				5. CAN communication line	AT-98
				6. Line pressure test	AT-55
				7. Control valve with TCM	AT-228
			OFF vehicle	8. Front brake (brake band)	AT-259
				9. Input clutch	AT-282
15		In “D” or “3”range, does not downshift to 3rd gear. Refer to AT-208, "A/T Does Not Shift: 4th gear → 3rd gear" .	ON vehicle	1. Fluid level and state	AT-54
				2. Vehicle speed sensor A/T and vehicle speed sensor MTR	AT-112, AT-133
				3. ATF pressure switch 3 and input clutch solenoid valve	AT-162, AT-140
				4. ATF pressure switch 1 and front brake solenoid valve	AT-160, AT-144
				5. CAN communication line	AT-98
				6. Line pressure test	AT-55
				7. Control valve with TCM	AT-228
			OFF vehicle	8. Input clutch	AT-282
16		In “D” or “2” range, does not downshift to 2nd gear. Refer to AT-210, "A/T Does Not Shift: 3rd gear → 2nd gear" .	ON vehicle	1. Fluid level and state	AT-54
				2. Vehicle speed sensor A/T and vehicle speed sensor MTR	AT-112, AT-133
				3. ATF pressure switch 6, high and low reverse clutch sole-noid valve	AT-166, AT-152
				4. CAN communication line	AT-98
				5. Line pressure test	AT-55
				6. Control valve with TCM	AT-228
			OFF vehicle	7. High and low reverse clutch	AT-293
17		In “D” or “1” range, does not downshift to 1st gear. Refer to AT-212, "A/T Does Not Shift: 2nd gear → 1st gear" .	ON vehicle	1. Fluid level and state	AT-54
				2. Vehicle speed sensor A/T and vehicle speed sensor MTR	AT-112, AT-133
				3. ATF pressure switch 5 and direct clutch solenoid valve	AT-164, AT-148
				4. CAN communication line	AT-98
				5. Line pressure test	AT-55
				6. Control valve with TCM	AT-228
			OFF vehicle	7. Direct clutch	AT-295

No.	Items	Symptom	Condition	Diagnostic Item	Reference page
18	Slips/Will Not engage	When “D” position, remains in 1st gear.	ON vehicle	1. Fluid level and state	AT-54
				2. Vehicle speed sensor A/T and vehicle speed sensor MTR	AT-112, AT-133
				3. Direct clutch solenoid valve	AT-148
				4. Line pressure test	AT-55
				5. CAN communication line	AT-98
				6. Control valve with TCM	AT-228
			OFF vehicle	7. 3rd one-way clutch	AT-280
				8. 1st one-way clutch	AT-288
				9. Gear system	AT-247
				10. Reverse brake	AT-259
				11. Forward one-way clutch (Parts behind drum support is impossible to perform inspection by disassembly. Refer to AT-19 .)	AT-259
				12. Forward brake (Parts behind drum support is impossible to perform inspection by disassembly. Refer to AT-19 .)	AT-259
19		When “D” position, remains in 2nd gear.	ON vehicle	1. Fluid level and state	AT-54
				2. Vehicle speed sensor A/T and vehicle speed sensor MTR	AT-112 , AT-133
				3. Low coast brake solenoid valve	AT-156
				4. Line pressure test	AT-55
				5. CAN communication line	AT-98
				6. Control valve with TCM	AT-228
			OFF vehicle	7. 3rd one-way clutch	AT-280
				8. Gear system	AT-247
				9. Direct clutch	AT-295
				10. Forward brake (Parts behind drum support is impossible to perform inspection by disassembly. Refer to AT-19 .)	AT-259

No.	Items	Symptom	Condition	Diagnostic Item	Reference page
20	Slips/Will Not engage	When “D” position, remains in 3rd gear.	ON vehicle	1. Fluid level and state	AT-54
				2. Vehicle speed sensor A/T and vehicle speed sensor MTR	AT-112, AT-133
				3. Line pressure test	AT-55
				4. CAN communication line	AT-98
				5. Control valve with TCM	AT-228
			OFF vehicle	6. 3rd one-way clutch	AT-280
				7. Gear system	AT-247
				8. High and low reverse clutch	AT-293
				9. Forward one-way clutch (Parts behind drum support is impossible to perform inspection by disassembly. Refer to AT-19 .)	AT-259
				10. Forward brake (Parts behind drum support is impossible to perform inspection by disassembly. Refer to AT-19 .)	AT-259
21		When “D” position, remains in 4th gear.	ON vehicle	1. Fluid level and state	AT-54
				2. Vehicle speed sensor A/T and vehicle speed sensor MTR	AT-112, AT-133
				3. ATF pressure switch 3 and input clutch solenoid valve	AT-162, AT-140
				4. ATF pressure switch 5 and direct clutch solenoid valve	AT-164,AT-148
				5. ATF pressure switch 6, high and low reverse clutch solenoid valve	AT-166, AT-152
				6. Low coast brake solenoid valve	AT-156
				7. Front brake solenoid valve	AT-144
				8. Line pressure test	AT-55
				9. CAN communication line	AT-98
				10. Control valve with TCM	AT-228
			OFF vehicle	11. Input clutch	AT-282
				12. Gear system	AT-247
				13. High and low reverse clutch	AT-293
				14. Direct clutch	AT-295

No.	Items	Symptom	Condition	Diagnostic Item	Reference page
22	Slips/Will Not Engage	When “D” position, remains in 5th gear.	ON vehicle	1. Fluid level and state	AT-54
				2. Vehicle speed sensor A/T and vehicle speed sensor MTR	AT-112, AT-133
				3. ATF pressure switch 1 and front brake solenoid valve	AT-160, AT-144
				4. Line pressure test	AT-55
				5. CAN communication line	AT-98
				6. Control valve with TCM	AT-228
			OFF vehicle	7. Front brake (brake band)	AT-259
				8. Input clutch	AT-282
				9. Gear system	AT-247
				10. High and low reverse clutch	AT-293
23		Vehicle cannot be started from D_1 . Refer to AT-189, "Vehicle Cannot Be Started From D_1" .	ON vehicle	1. Fluid level and state	AT-54
				2. Accelerator pedal position sensor	AT-125
				3. Line pressure test	AT-55
				4. CAN communication line	AT-98
				5. Control valve with TCM	AT-228
			OFF vehicle	6. Torque converter	AT-259
				7. Oil pump assembly	AT-277
				8. 3rd one-way clutch	AT-280
				9. 1st one-way clutch	AT-288
				10. Gear system	AT-247
				11. Reverse brake	AT-259
				12. Forward one-way clutch (Parts behind drum support is impossible to perform inspection by disassembly. Refer to AT-19 .)	AT-259
				13. Forward brake (Parts behind drum support is impossible to perform inspection by disassembly. Refer to AT-19 .)	AT-259
24		Does not lock-up. Refer to AT-199, "A/T Does Not Perform Lock-up" .	ON vehicle	1. Fluid level and state	AT-54
				2. Line pressure test	AT-55
				3. Engine speed signal	AT-117
				4. Turbine revolution sensor	AT-110
				5. Torque converter clutch solenoid valve	AT-119
				6. CAN communication line	AT-98
				7. Control valve with TCM	AT-228
			OFF vehicle	8. Torque converter	AT-259
				9. Oil pump assembly	AT-277

No.	Items	Symptom	Condition	Diagnostic Item	Reference page
25	Slips/Will Not engage	Does not hold lock-up condition. Refer to AT-201, "A/T Does Not Hold Lock-up Condition" .	ON vehicle	1. Fluid level and state	AT-54
				2. Line pressure test	AT-55
				3. Engine speed signal	AT-117
				4. Turbine revolution sensor	AT-110
				5. Torque converter clutch solenoid valve	AT-119
				6. CAN communication line	AT-98
				7. Control valve with TCM	AT-228
			OFF vehicle	8. Torque converter	AT-259
				9. Oil pump assembly	AT-277
26		Lock-up is not released. Refer to AT-203, "Lock-up Is Not Released" .	ON vehicle	1. Fluid level and state	AT-54
				2. Line pressure test	AT-55
				3. Engine speed signal	AT-117
				4. Turbine revolution sensor	AT-110
				5. Torque converter clutch solenoid valve	AT-119
				6. CAN communication line	AT-98
				7. Control valve with TCM	AT-228
			OFF vehicle	8. Torque converter	AT-259
				9. Oil pump assembly	AT-277
27		No shock at all or the clutch slips when vehicle changes speed $D_1 \rightarrow D_2$.	ON vehicle	1. Fluid level and state	AT-54
				2. Vehicle speed sensor A/T and vehicle speed sensor MTR	AT-112, AT-133
				3. ATF pressure switch 5 and direct clutch solenoid valve	AT-164, AT-148
				4. CAN communication line	AT-98
				5. Line pressure test	AT-55
				6. Control valve with TCM	AT-228
			OFF vehicle	7. Torque converter	AT-259
				8. Oil pump assembly	AT-277
				9. 3rd one-way clutch	AT-280
				10. Gear system	AT-247
				11. Direct clutch	AT-295
				12. Forward brake (Parts behind drum support is impossible to perform inspection by disassembly. Refer to AT-19 .)	AT-259

No.	Items	Symptom	Condition	Diagnostic Item	Reference page
28	Slips/Will Not engage	No shock at all or the clutch slips when vehicle changes speed $D_2 \rightarrow D_3$.	ON vehicle	1. Fluid level and state	AT-54
				2. Vehicle speed sensor A/T and vehicle speed sensor MTR	AT-112, AT-133
				3. ATF pressure switch 6, high and low reverse clutch solenoid valve	AT-166, AT-152
				4. CAN communication line	AT-98
				5. Line pressure test	AT-55
				6. Control valve with TCM	AT-228
			OFF vehicle	7. Torque converter	AT-259
				8. Oil pump assembly	AT-277
				9. 3rd one-way clutch	AT-280
				10. Gear system	AT-247
				11. High and low reverse clutch	AT-293
				12. Forward one- way clutch (Parts behind drum support is impossible to perform inspection by disassembly. Refer to AT-19 .)	AT-259
				13. Forward brake (Parts behind drum support is impossible to perform inspection by disassembly. Refer to AT-19 .)	AT-259
29		No shock at all or the clutch slips when vehicle changes speed $D_3 \rightarrow D_4$.	ON vehicle	1. Fluid level and state	AT-54
				2. Vehicle speed sensor A/T and vehicle speed sensor MTR	AT-112, AT-133
				3. ATF pressure switch 3 and input clutch solenoid valve	AT-162, AT-140
				4. ATF pressure switch 1 and front brake solenoid valve	AT-160, AT-144
				5. CAN communication line	AT-98
				6. Line pressure test	AT-55
				7. Control valve with TCM	AT-228
			OFF vehicle	8. Torque converter	AT-259
				9. Oil pump assembly	AT-277
				10. Input clutch	AT-282
				11. Gear system	AT-247
				12. High and low reverse clutch	AT-293
				13. Direct clutch	AT-295

No.	Items	Symptom	Condition	Diagnostic Item	Reference page
30	Slips/Will Not engage	No shock at all or the clutch slips when vehicle changes speed D4 → D5 .	ON vehicle	1. Fluid level and state	AT-54
				2. Vehicle speed sensor A/T and vehicle speed sensor MTR	AT-112, AT-133
				3. ATF pressure switch 1 and front brake solenoid valve	AT-160, AT-144
				4. ATF pressure switch 5 and direct clutch solenoid valve	AT-164, AT-148
				5. CAN communication line	AT-98
				6. Line pressure test	AT-55
				7. Control valve with TCM	AT-228
			OFF vehicle	8. Torque converter	AT-259
				9. Oil pump assembly	AT-277
				10. Front brake (brake band)	AT-259
				11. Input clutch	AT-282
				12. Gear system	AT-247
				13. High and low reverse clutch	AT-293
31		When you press the accelerator pedal and shift speed D5 → D4 the engine idles or the transmission slips.	ON vehicle	1. Fluid level and state	AT-54
				2. Vehicle speed sensor A/T and vehicle speed sensor MTR	AT-112, AT-133
				3. ATF pressure switch 1 and front brake solenoid valve	AT-160, AT-144
				4. ATF pressure switch 5 and direct clutch solenoid valve	AT-164, AT-148
				5. CAN communication line	AT-98
				6. Line pressure test	AT-55
				7. Control valve with TCM	AT-228
			OFF vehicle	8. Torque converter	AT-259
				9. Oil pump assembly	AT-277
				10. Input clutch	AT-282
				11. Gear system	AT-247
				12. High and low reverse clutch	AT-293
				13. Direct clutch	AT-295

No.	Items	Symptom	Condition	Diagnostic Item	Reference page
32	Slips/Will Not engage	When you press the accelerator pedal and shift speed D4 → D3 the engine idles or the transmission slips.	ON vehicle	1. Fluid level and state	AT-54
				2. Vehicle speed sensor A/T and vehicle speed sensor MTR	AT-112, AT-133
				3. ATF pressure switch 3 and input clutch solenoid valve	AT-162, AT-140
				4. ATF pressure switch 1 and front brake solenoid valve	AT-160, AT-144
				5. CAN communication line	AT-98
				6. Line pressure test	AT-55
				7. Control valve with TCM	AT-228
			OFF vehicle	8. Torque converter	AT-259
				9. Oil pump assembly	AT-277
				10. 3rd one-way clutch	AT-280
				11. Gear system	AT-247
				12. High and low reverse clutch	AT-293
				13. Forward one- way clutch (Parts behind drum support is impossible to perform inspection by disassembly. Refer to AT-19 .)	AT-259
				14. Forward brake (Parts behind drum support is impossible to perform inspection by disassembly. Refer to AT-19 .)	AT-259
33		When you press the accelerator pedal and shift speed D3 → D2 the engine idles or the transmission slips.	ON vehicle	1. Fluid level and state	AT-54
				2. Vehicle speed sensor A/T and vehicle speed sensor MTR	AT-112, AT-133
				3. ATF pressure switch 6, high and low reverse clutch sole-noid valve	AT-166, AT-152
				4. ATF pressure switch 5 and direct clutch solenoid valve	AT-164, AT-148
				5. CAN communication line	AT-98
				6. Line pressure test	AT-55
				7. Control valve with TCM	AT-228
			OFF vehicle	8. Torque converter	AT-259
				9. Oil pump assembly	AT-277
				10. 3rd one-way clutch	AT-280
				11. Gear system	AT-247
				12. Direct clutch	AT-295
				13. Forward brake (Parts behind drum support is impossible to perform inspection by disassembly. Refer to AT-19 .)	AT-259

No.	Items	Symptom	Condition	Diagnostic Item	Reference page
34	Slips/Will Not Engage	When you press the accelerator pedal and shift speed D2 → D1 the engine idles or the transmission slips.	ON vehicle	1. Fluid level and state	AT-54
				2. Vehicle speed sensor A/T and vehicle speed sensor MTR	AT-112, AT-133
				3. ATF pressure switch 5 and direct clutch solenoid valve	AT-164, AT-148
				4. CAN communication line	AT-98
				5. Line pressure test	AT-55
				6. Control valve with TCM	AT-228
			OFF vehicle	7. Torque converter	AT-259
				8. Oil pump assembly	AT-277
				9. 3rd one-way clutch	AT-280
				10. 1st one-way clutch	AT-288
				11. Gear system	AT-247
				12. Reverse brake	AT-259
				13. Forward one- way clutch (Parts behind drum support is impossible to perform inspection by disassembly. Refer to AT-19 .)	AT-259
				14. Forward brake (Parts behind drum support is impossible to perform inspection by disassembly. Refer to AT-19 .)	AT-259
35		With selector lever in “D” position, accelera-tion is extremely poor.	ON vehicle	1. Fluid level and state	AT-54
				2. Line pressure test	AT-55
				3. Accelerator pedal position sensor	AT-125
				4. CAN communication line	AT-98
				5. PNP switch	AT-106
				6. Control cable adjustment	AT-217
				7. Control valve with TCM	AT-228
			OFF vehicle	8. Torque converter	AT-259
				9. Oil pump assembly	AT-277
				10. 1st one-way clutch	AT-288
				11. Gear system	AT-247
				12. Reverse brake	AT-259
				13. Forward one- way clutch (Parts behind drum support is impossible to perform inspection by disassembly. Refer to AT-19 .)	AT-259
				14. Forward brake (Parts behind drum support is impossible to perform inspection by disassembly. Refer to AT-19 .)	AT-259

No.	Items	Symptom	Condition	Diagnostic Item	Reference page
36	Slips/Will Not Engage	With selector lever in “R” position, acceleration is extremely poor.	ON vehicle	1. Fluid level and state	AT-54
				2. Line pressure test	AT-55
				3. Accelerator pedal position sensor	AT-125
				4. ATF pressure switch 6, high and low reverse clutch solenoid valve	AT-166, AT-152
				5. CAN communication line	AT-98
				6. PNP switch	AT-106
				7. Control cable adjustment	AT-217
				8. Control valve with TCM	AT-228
			OFF vehicle	9. Gear system	AT-247
				10. Output shaft	AT-259
				11. Reverse brake	AT-259
37		While starting off by accelerating in 1st, engine races or slippage occurs.	ON vehicle	1. Fluid level and state	AT-54
				2. Line pressure test	AT-55
				3. Accelerator pedal position sensor	AT-125
				4. CAN communication line	AT-98
				5. Control valve with TCM	AT-228
			OFF vehicle	6. Torque converter	AT-259
				7. Oil pump assembly	AT-277
				8. 3rd one-way clutch	AT-280
				9. 1st one-way clutch	AT-288
				10. Gear system	AT-247
				11. Reverse brake	AT-259
				12. Forward one- way clutch (Parts behind drum support is impossible to perform inspection by disassembly. Refer to AT-19 .)	AT-259
				13. Forward brake (Parts behind drum support is impossible to perform inspection by disassembly. Refer to AT-19 .)	AT-259
38		While accelerating in 2nd, engine races or slippage occurs.	ON vehicle	1. Fluid level and state	AT-54
				2. Line pressure test	AT-55
				3. Accelerator pedal position sensor	AT-125
				4. CAN communication line	AT-98
				5. ATF pressure switch 5 and direct clutch solenoid valve	AT-164, AT-148
				6. Control valve with TCM	AT-228
			OFF vehicle	7. Torque converter	AT-259
				8. Oil pump assembly	AT-277
				9. 3rd one-way clutch	AT-280
				10. Gear system	AT-247
				11. Direct clutch	AT-295
				12. Forward brake (Parts behind drum support is impossible to perform inspection by disassembly. Refer to AT-19 .)	AT-295

No.	Items	Symptom	Condition	Diagnostic Item	Reference page
39	Slips/Will Not Engage	While accelerating in 3rd, engine races or slippage occurs.	ON vehicle	1. Fluid level and state	AT-54
				2. Line pressure test	AT-55
				3. Accelerator pedal position sensor	AT-125
				4. CAN communication line	AT-98
				5. ATF pressure switch 6, high and low reverse clutch solenoid valve	AT-166, AT-152
				6. Control valve with TCM	AT-228
			OFF vehicle	7. Torque converter	AT-259
				8. Oil pump assembly	AT-277
				9. 3rd one-way clutch	AT-280
				10. Gear system	AT-247
				11. High and low reverse clutch	AT-293
				12. Forward one- way clutch (Parts behind drum support is impossible to perform inspection by disassembly. Refer to AT-19 .)	AT-259
				13. Forward brake (Parts behind drum support is impossible to perform inspection by disassembly. Refer to AT-19 .)	AT-259
40		While accelerating in 4th, engine races or slippage occurs.	ON vehicle	1. Fluid level and state	AT-54
				2. Line pressure test	AT-55
				3. Accelerator pedal position sensor	AT-125
				4. CAN communication line	AT-98
				5. ATF pressure switch 3 and input clutch solenoid valve	AT-162, AT-140
				6. Control valve with TCM	AT-228
			OFF vehicle	7. Torque converter	AT-259
				8. Oil pump assembly	AT-277
				9. Input clutch	AT-282
				10. Gear system	AT-247
				11. High and low reverse clutch	AT-293
				12. Direct clutch	AT-295

No.	Items	Symptom	Condition	Diagnostic Item	Reference page
41	Slips/Will Not Engage	While accelerating in 5th, engine races or slippage occurs.	ON vehicle	1. Fluid level and state	AT-54
				2. Line pressure test	AT-55
				3. Accelerator pedal position sensor	AT-125
				4. CAN communication line	AT-98
				5. ATF pressure switch 1 and front brake solenoid valve	AT-160, AT-144
				6. Control valve with TCM	AT-228
			OFF vehicle	7. Torque converter	AT-259
				8. Oil pump assembly	AT-277
				9. Front brake (brake band)	AT-259
				10. Input clutch	AT-282
				11. Gear system	AT-247
				12. High and low reverse clutch	AT-293
42		Slips at lock-up.	ON vehicle	1. Fluid level and state	AT-54
				2. Line pressure test	AT-55
				3. Engine speed signal	AT-117
				4. Turbine revolution sensor	AT-110
				5. Torque converter clutch solenoid valve	AT-119
				6. CAN communication line	AT-98
				7. Control valve with TCM	AT-228
			OFF vehicle	8. Torque converter	AT-259
				9. Oil pump assembly	AT-277
43		No creep at all. Refer to AT-184, "Vehicle Does Not Creep Backward In "R" Position" , AT-187, "Vehicle Does Not Creep Forward In "D" Position"	ON vehicle	1. Fluid level and state	AT-54
				2. Line pressure test	AT-55
				3. Accelerator pedal position sensor	AT-125
				4. ATF pressure switch 5 and direct clutch solenoid valve	AT-164, AT-148
				5. PNP switch	AT-106
				6. CAN communication line	AT-98
				7. Control cable adjustment	AT-217
				8. Control valve with TCM	AT-228
			OFF vehicle	9. Torque converter	AT-259
				10. Oil pump assembly	AT-277
				11. 1st one-way clutch	AT-288
				12. Gear system	AT-247
				13. Reverse brake	AT-259
				14. Direct clutch	AT-295
				15. Forward one- way clutch (Parts behind drum support is impossible to perform inspection by disassembly. Refer to AT-19 .)	AT-259
				16. Forward brake (Parts behind drum support is impossible to perform inspection by disassembly. Refer to AT-19 .)	AT-259

No.	Items	Symptom	Condition	Diagnostic Item	Reference page
44	Slips/Will Not Engage	Vehicle cannot run in all positions.	ON vehicle	1. Fluid level and state	AT-54
				2. Line pressure test	AT-55
				3. PNP switch	AT-106
				4. Control cable adjustment	AT-217
				5. Control valve with TCM	AT-228
			OFF vehicle	6. Oil pump assembly	AT-277
				7. Gear system	AT-247
				8. Output shaft	AT-259
45		With selector lever in “D” position, driving is not possible.	ON vehicle	1. Fluid level and state	AT-54
				2. Line pressure test	AT-55
				3. PNP switch	AT-106
				4. Control cable adjustment	AT-217
				5. Control valve with TCM	AT-228
			OFF vehicle	6. Torque converter	AT-259
				7. Oil pump assembly	AT-277
				8. 1st one-way clutch	AT-288
				9. Gear system	AT-247
				10. Reverse brake	AT-259
				11. Forward one- way clutch (Parts behind drum support is impossible to perform inspection by disassembly. Refer to AT-19 .)	AT-259
				12. Forward brake (Parts behind drum support is impossible to perform inspection by disassembly. Refer to AT-19 .)	AT-259
46		With selector lever in “R” position, driving is not possible.	ON vehicle	1. Fluid level and state	AT-54
				2. Line pressure test	AT-55
				3. PNP switch	AT-106
				4. Control cable adjustment	AT-217
				5. Control valve with TCM	AT-228
			OFF vehicle	6. Gear system	AT-247
				7. Output shaft	AT-259
				8. Reverse brake	AT-259
47	Others	Shift point is high in “D” position.	ON vehicle	1. Vehicle speed sensor A/T and vehicle speed sensor MTR	AT-112, AT-133
				2. Accelerator pedal position sensor	AT-125
				3. CAN communication line	AT-98
				4. ATF temperature sensor	AT-128
				5. Control valve with TCM	AT-228

No.	Items	Symptom	Condition	Diagnostic Item	Reference page
48	Others	Shift point is low in “D” position.	ON vehicle	1. Vehicle speed sensor A/T and vehicle speed sensor MTR	AT-112, AT-133
				2. Accelerator pedal position sensor	AT-125
				3. CAN communication line	AT-98
				4. Control valve with TCM	AT-228
49		Judder occurs during lock-up.	ON vehicle	1. Fluid level and state	AT-54
				2. Engine speed signal	AT-117
				3. Turbine revolution sensor	AT-110
				4. Vehicle speed sensor A/T and vehicle speed sensor MTR	AT-112, AT-133
				5. Accelerator pedal position sensor	AT-125
				6. CAN communication line	AT-98
				7. Torque converter clutch solenoid valve	AT-119
				8. Control valve with TCM	AT-228
			OFF vehicle	9. Torque converter	AT-259
50		Strange noise in “R” position.	ON vehicle	1. Fluid level and state	AT-54
				2. Engine speed signal	AT-117
				3. CAN communication line	AT-98
				4. Control valve with TCM	AT-228
			OFF vehicle	5. Torque converter	AT-259
				6. Oil pump assembly	AT-277
				7. Gear system	AT-247
				8. High and low reverse clutch	AT-293
				9. Reverse brake	AT-259
51		Strange noise in “N” position.	ON vehicle	1. Fluid level and state	AT-54
				2. Engine speed signal	AT-117
				3. CAN communication line	AT-98
				4. Control valve with TCM	AT-228
			OFF vehicle	5. Torque converter	AT-259
				6. Oil pump assembly	AT-277
				7. Gear system	AT-247
52		Strange noise in “D” position.	ON vehicle	1. Fluid level and state	AT-54
				2. Engine speed signal	AT-117
				3. CAN communication line	AT-98
				4. Control valve with TCM	AT-228
			OFF vehicle	5. Torque converter	AT-259
				6. Oil pump assembly	AT-277
				7. Gear system	AT-247
				8. Forward brake (Parts behind drum support is impossible to perform inspection by disassembly. Refer to AT-19 .)	AT-259

No.	Items	Symptom	Condition	Diagnostic Item	Reference page
53	Others	Vehicle dose not decelerate by engine brake. Refer to AT-214, "Vehicle Does Not Decelerate By Engine Brake" .	ON vehicle	1. PNP switch	AT-106
				2. Fluid level and state	AT-54
				3. Control cable adjustment	AT-217
				4. 1st position switch	AT-214
				5. ATF pressure switch 5	AT-164
				6. CAN communication line	AT-98
				7. Control valve with TCM	AT-228
			OFF vehicle	8. Input clutch	AT-282
				9. High and low reverse clutch	AT-293
				10. Direct clutch	AT-295
54		Engine brake does not operate in “2” position.	ON vehicle	1. PNP switch	AT-106
				2. Fluid level and state	AT-54
				3. Control cable adjustment	AT-217
				5. ATF pressure switch 6	AT-166
				6. CAN communication line	AT-98
				7. Control valve with TCM	AT-228
			OFF vehicle	8. Front brake (brake band)	AT-259
				9. Input clutch	AT-282
				10. High and low reverse clutch	AT-293
55		Engine brake does not operate in “1” position.	ON vehicle	1. PNP switch	AT-106
				2. Fluid level and state	AT-54
				3. Control cable adjustment	AT-217
				4. 1st position switch	AT-214
				5. ATF pressure switch 5	AT-164
				6. CAN communication line	AT-98
				7. Control valve with TCM	AT-228
			OFF vehicle	8. Input clutch	AT-282
				9. High and low reverse clutch	AT-293
				10. Direct clutch	AT-295

No.	Items	Symptom	Condition	Diagnostic Item	Reference page
56	Others	Maximum speed low.	ON vehicle	1. Fluid level and state	AT-54
				2. Line pressure test	AT-55
				3. Accelerator pedal position sensor	AT-125
				4. CAN communication line	AT-98
				5. Direct clutch solenoid valve	AT-148
				6. Control valve with TCM	AT-228
			OFF vehicle	7. Torque converter	AT-259
				8. Oil pump assembly	AT-277
				9. Input clutch	AT-282
				10. Gear system	AT-247
				11. High and low reverse clutch	AT-293
				12. Direct clutch	AT-295
				13. Forward one- way clutch (Parts behind drum support is impossible to perform inspection by disassembly. Refer to AT-19 .)	AT-259
				14 Forward brake (Parts behind drum support is impossible to perform inspection by disassembly. Refer to AT-19 .)	AT-259
57		Extremely large creep.	ON vehicle	1. Engine idle speed	EC-76
				2. CAN communication line	AT-98
				3. ATF pressure switch 5	AT-164
			OFF vehicle	4. Torque converter	AT-259
58		With selector lever in “P” position, vehicle does not enter parking condition or, with selector lever in another position, park-ing condition is not cancelled. Refer to AT-180, "In “P” Position, Vehicle Moves When Pushed" .	ON vehicle	1. PNP switch	AT-106
				2. Control cable adjustment	AT-217
			OFF vehicle	3. Parking pawl components	AT-247
59		Vehicle runs with transmission in “P” position.	ON vehicle	1. PNP switch	AT-106
				2. Fluid level and state	AT-54
				3. Control cable adjustment	AT-217
				4. Control valve with TCM	AT-228
				5. Parking pawl components	AT-247
			OFF vehicle	6. Gear system	AT-247

No.	Items	Symptom	Condition	Diagnostic Item	Reference page
60	Others	Vehicle runs with transmission in “N” position. Refer to AT-181, "In “N” Position, Vehicle Moves" .	ON vehicle	1. PNP switch	AT-106
				2. Fluid level and state	AT-54
				3. Control cable adjustment	AT-217
				4. Control valve with TCM	AT-228
			OFF vehicle	5. Input clutch	AT-282
				6. Gear system	AT-247
				7. Direct clutch	AT-295
				8. Reverse brake	AT-259
				9. Forward one- way clutch (Parts behind drum support is impossible to perform inspection by disassembly. Refer to AT-19 .)	AT-259
				10. Forward brake (Parts behind drum support is impossible to perform inspection by disassembly. Refer to AT-19 .)	AT-259
61		Engine does not start in “N” or “P” position. Refer to AT-179, "Engine Cannot Be Started In “P” or “N” Position" .	ON vehicle	1. Ignition switch and starter	PG-4, SC-10
				2. Control cable adjustment	AT-217
				3. PNP switch	AT-106
62		Engine starts in positions other than “N” or “P”.	ON vehicle	1. Ignition switch and starter	PG-4, SC-10
				2. Control cable adjustment	AT-217
				3. PNP switch	AT-106
63		Engine stall.	ON vehicle	1. Fluid level and state	AT-54
				2. Engine speed signal	AT-117
				3. Turbine revolution sensor	AT-110
				4. Torque converter clutch solenoid valve	AT-119
				5. CAN communication line	AT-98
				6. Control valve with TCM	AT-228
			OFF vehicle	7. Torque converter	AT-259
64		Engine stalls when select lever shifted “N” → “D”, “R”.	ON vehicle	1. Fluid level and state	AT-54
				2. Engine speed signal	AT-117
				3. Turbine revolution sensor	AT-110
				4. Torque converter clutch solenoid valve	AT-119
				5. CAN communication line	AT-98
				6. Control valve with TCM	AT-228
			OFF vehicle	7. Torque converter	AT-259

No.	Items	Symptom	Condition	Diagnostic Item	Reference page
65	Others	Engine speed does not return to idle. Refer to AT-204, "Engine Speed Does Not Return to Idle" .	ON vehicle	1. Fluid level and state	AT-54
				2. ATF pressure switch 5 and direct clutch solenoid valve	AT-164, AT-148
				3. ATF pressure switch 1 and front brake solenoid valve	AT-160, AT-144
				4. Accelerator pedal position sensor	AT-125
				5. Vehicle speed sensor A/T and vehicle speed sensor MTR	AT-112, AT-133
				6. CAN communication line	AT-98
				7. Control valve with TCM	AT-228
			OFF vehicle	8. Front brake (brake band)	AT-259
				9. Direct clutch	AT-295

TCM Input/Output Signal Reference Values

ECS00CN1

A/T ASSEMBLY HARNESS CONNECTOR TERMINAL LAYOUT

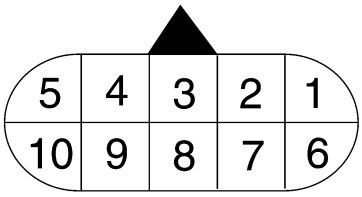

SCIA1658E

TCM INSPECTION TABLE

Data are reference value and are measured between each terminal and ground.

Terminal No.	Wire color	Item	Condition		Data (Approx.)
1	R/B	Power supply (Memory back-up)	Always		Battery voltage
2	R/B	Power supply (Memory back-up)	Always		Battery voltage
3	L	CAN-H	–		–
4	V	K-line (CONSULT-II signal)	The terminal is connected to the data link connector for CONSULT-II.		–
5	B	Ground	Always		0V
6	W/G	Power supply		–	Battery voltage
				–	0V
7	LG	Back-up lamp relay		Selector lever in “R” position.	0V
				Selector lever in other positions.	Battery voltage
8	P	CAN-L	–		–
9	R	Starter relay		Selector lever in “N”,“ P” positions.	Battery voltage
				Selector lever in other positions.	0V
10	B	Ground	Always		0V

CONSULT-II Function (A/T)

ECS00CN2

FUNCTION

CONSULT-II can display each diagnostic item using the diagnostic test modes shown following.

TCM diagnostic mode	Description
WORK SUPPORT	Supports inspections and adjustments. Commands are transmitted to the TCM for setting the status suitable for required operation, input/output signals are received from the TCM and received data is displayed.
SELF-DIAG RESULTS	Displays TCM self-diagnosis results.
DATA MONITOR	Displays TCM input/output data in real time.
CAN DIAG SUPPORT MNTR	The result of transmit/receive diagnosis of CAN communication can be read.
ACTIVE TEST	Operation of electrical loads can be checked by sending drive signal to them.
FUNCTION TEST	Conducted by CONSULT-II instead of a technician to determine whether each system is “OK” or “NG”.
ECU PART NUMBER	TCM part number can be read.

CONSULT-II REFERENCE VALUE

NOTICE:

1. The CONSULT-II electrically displays shift timing and lock-up timing (that is, operation timing of each solenoid).
   Check for time difference between actual shift timing and the CONSULT-II display. If the difference is noticeable, mechanical parts (except solenoids, sensors, etc.) may be malfunctioning. Check mechanical parts using applicable diagnostic procedures.
2. Shift schedule (which implies gear position) displayed on CONSULT-II and that indicated in Service Manual may differ slightly. This occurs because of the following reasons:

- Actual shift schedule has more or less tolerance or allowance,
- Shift schedule indicated in Service Manual refers to the point where shifts start, and
- Gear position displayed on CONSULT-II indicates the point where shifts are completed.

3. Display of solenoid valves on CONSULT-II changes at the start of shifting, while gear position is displayed upon completion of shifting (which is computed by TCM).

Item name	Condition	Display value (Approx.)
ATF TEMP SE 1	0°C (32° F) - 20°C (68°F) - 80°C (176°F)	3.3 - 2.7 - 0.9 V
ATF TEMP SE 2		3.3 - 2.5 - 0.7 V
TCC SOLENOID	When perform slip lock-up	0.2 - 0.4 A
	When perform lock-up	0.4 - 0.6 A
SLCT LVR POSI	Selector lever in “N”,“P” positions.	N/P
	Selector lever in “R” position.	R
	Selector lever in “D” position.	D
	Selector lever in “3” position.	3
	Selector lever in “2” position.	2
	Selector lever in “1” position.	1
VHCL/S SE·A/T	During driving	Approximately matches the speedometer reading.
ENGINE SPEED	Engine running	Closely matches the tachometer reading.
LINE PRES SOL	During driving	0.2 - 0.6 A
TURBINE REV	During driving (lock-up ON)	Approximately matches the engine speed.
VHCL/S SE·MTR	During driving	Approximately matches the speedometer reading.

Item name	Condition	Display value (Approx.)
ATF PRES SW 1	Front brake engaged. Refer to AT-22	ON
	Front brake disengaged. Refer to AT-22	OFF
ATF PRES SW 2	Low coast brake engaged. Refer to AT-22	ON
	Low coast brake disengaged. Refer to AT-22	OFF
ATF PRES SW 3	Input clutch engaged. Refer to AT-22	ON
	Input clutch disengaged. Refer to AT-22	OFF
ATF PRES SW 5	Direct clutch engaged. Refer to AT-22	ON
	Direct clutch disengaged. Refer to AT-22	OFF
ATF PRES SW 6	High and low reverse clutch engaged. Refer to AT-22	ON
	High and low reverse clutch disengaged. Refer to AT-22	OFF
I/C SOLENOID	Input clutch disengaged. Refer to AT-22	0.6 - 0.8 A
	Input clutch engaged. Refer to AT-22	0 - 0.05 A
FR/B SOLENOID	Front brake engaged. Refer to AT-22	0.6 - 0.8 A
	Front brake disengaged. Refer to AT-22	0 - 0.05 A
D/C SOLENOID	Direct clutch disengaged. Refer to AT-22	0.6 - 0.8 A
	Direct clutch engaged. Refer to AT-22	0 - 0.05 A
HLR/C SOL	High and low reverse clutch disengaged. Refer to AT-22	0.6 - 0.8 A
	High and low reverse clutch engaged. Refer to AT-22	0 - 0.05 A
ON OFF SOL	Low coast brake engaged. Refer to AT-22	ON
	Low coast brake disengaged. Refer to AT-22	OFF
STARTER RELAY	Selector lever in “N”,“P” positions.	ON
	Selector lever in other position.	OFF
ACCELE POSI	Released accelerator pedal.	0.0/8
	Fully depressed accelerator pedal.	8/8
CLSD THL POS	Released accelerator pedal.	ON
	Fully depressed accelerator pedal.	OFF
W/O THL POS	Fully depressed accelerator pedal.	ON
	Released accelerator pedal.	OFF
OD CONT SW	Releasing overdrive control switch	OFF
	Holding overdrive control switch	ON
BRAKE SW	Depressed brake pedal.	ON
	Released brake pedal.	OFF

CONSULT-II START PROCEDURE

Refer to GI-38, "CONSULT-II Start Procedure" .

SELF-DIAGNOSTIC RESULT MODE

Display Items List

X: Applicable, —: Not applicable

Items (CONSULT-II screen terms)	Malfunction is detected when...	TCM self-diagnosis	OBD-II (DTC)	Reference page
		"A/T" with CONSULT-II	MIL indicator lamp*1, "ENGINE" with CONSULT-II or GST	
CAN COMM CIRCUIT	● When a malfunction is detected in CAN communications	U1000	U1000	AT-98
STARTER RELAY/ CIRC	● If this signal is ON other than in "P" or "N" position, this is judged to be a malfunction. (And if it is OFF in "P" or "N" position, this too is judged to be a malfunction.)	P0615	—	AT-101
TCM	● TCM is malfunctioning.	P0700	P0700	AT-105
PNP SW/CIRC	● PNP switch 1-4 signals input with impossible pattern ● "P" position is detected from "N" position without any other position being detected in between.	P0705	P0705	AT-106
TURBINE REV S/CIRC	● TCM does not receive the proper voltage signal from the sensor. ● TCM detects an irregularity only at position of 4th gear for turbine revolution sensor 2.	P0717	P0717	AT-110
VEH SPD SEN/CIR AT (Revolution sensor)	● Signal from vehicle speed sensor A/T (Revolution sensor) not input due to cut line or the like ● Unexpected signal input during running ● After ignition switch is turned ON, unexpected signal input from vehicle speed sensor MTR before the vehicle starts moving	P0720	P0720	AT-112
ENGINE SPEED SIG	● TCM does not receive the CAN communication signal from the ECM.	P0725	—	AT-117
TCC SOLENOID/CIRC	● Normal voltage not applied to solenoid due to cut line, short, or the like	P0740	P0740	AT-119
A/T TCC S/V FNCTN	● A/T cannot perform lock-up even if electrical circuit is good. ● TCM detects as irregular by comparing difference value with slip rotation.	P0744	P0744*2	AT-121
L/PRESS SOL/CIRC	● Normal voltage not applied to solenoid due to cut line, short, or the like ● TCM detects as irregular by comparing target value with monitor value.	P0745	P0745	AT-123
TP SEN/CIRC A/T	● TCM does not receive the proper accelerator pedal position signals (input by CAN communication) from ECM.	P1705	—	AT-125
ATF TEMP SEN/CIRC	● During running, the ATF temperature sensor signal voltage is excessively high or low	P1710	P0710	AT-128
TURBINE REV S/CIRC	● TCM does not receive the proper voltage signal from the sensor. ● TCM detects an irregularity only at position of 4th gear for turbine revolution sensor 2.	P1716	P1716	AT-110

Items (CONSULT-II screen terms)	Malfunction is detected when...	TCM self-diagnosis	OBD-II (DTC)	Reference page
		"A/T" with CONSULT-II	MIL indicator lamp*1, "ENGINE" with CONSULT-II or GST	
VEH SPD SE/CIR·MTR	● Signal (CAN communication) from vehicle speed sensor MTR not input due to cut line or the like ● Unexpected signal input during running	P1721	—	AT-133
A/T INTERLOCK	● Except during shift change, the gear position and ATF pressure switch states are monitored and comparative judgement made.	P1730	P1730	AT-135
A/T 1ST E/BRAKING	● Each ATF pressure switch and solenoid current is monitored and if a pattern is detected having engine braking 1st gear other than in the "1" position, a malfunction is detected.	P1731	—	AT-138
I/C SOLENOID/CIRC	● Normal voltage not applied to solenoid due to functional malfunction, cut line, short, or the like ● TCM detects as irregular by comparing target value with monitor value.	P1752	P1752	AT-140
I/C SOLENOID FNCTN	● TCM detects that actual gear ratio is irregular, and relation between gear position and condition of ATF pressure switch 3 is irregular during depressing accelerator pedal. (Other than during shift change) ● TCM detects that relation between gear position and condition of ATF pressure switch 3 is irregular during releasing accelerator pedal. (Other than during shift change)	P1754	P1754*2	AT-142
FR/B SOLENOID/CIRC	● Normal voltage not applied to solenoid due to functional malfunction, cut line, short, or the like ● TCM detects as irregular by comparing target value with monitor value.	P1757	P1757	AT-144
FR/B SOLENOID FNCT	● TCM detects that actual gear ratio is irregular, and relation between gear position and condition of ATF pressure switch 1 is irregular during depressing accelerator pedal. (Other than during shift change) ● TCM detects that relation between gear position and condition of ATF pressure switch 1 is irregular during releasing accelerator pedal. (Other than during shift change)	P1759	P1759*2	AT-146
D/C SOLENOID/CIRC	● Normal voltage not applied to solenoid due to cut line, short, or the like ● TCM detects as irregular by comparing target value with monitor value.	P1762	P1762	AT-148
D/C SOLENOID FNCTN	● TCM detects that actual gear ratio is irregular, and relation between gear position and condition of ATF pressure switch 5 is irregular during depressing accelerator pedal. (Other than during shift change) ● TCM detects that relation between gear position and condition of ATF pressure switch 5 is irregular during releasing accelerator pedal. (Other than during shift change)	P1764	P1764*2	AT-150
HLR/C SOL/CIRC	● Normal voltage not applied to solenoid due to functional malfunction, cut line, short, or the like ● TCM detects as irregular by comparing target value with monitor value.	P1767	P1767	AT-152

Items (CONSULT-II screen terms)	Malfunction is detected when...	TCM self-diagnosis	OBD-II (DTC)	Reference page
		"A/T" with CONSULT-II	MIL indicator lamp*1, "ENGINE" with CONSULT-II or GST	
HLR/C SOL FNCTN	● TCM detects that actual gear ratio is irregular, and relation between gear position and condition of ATF pressure switch 6 is irregular during depressing accelerator pedal. (Other than during shift change) ● TCM detects that relation between gear position and condition of ATF pressure switch 6 is irregular during releasing accelerator pedal. (Other than during shift change)	P1769	P1769*2	AT-154
LC/B SOLENOID/CIRC	● Normal voltage not applied to solenoid due to functional malfunction, cut line, short, or the like	P1772	P1772	AT-156
LC/B SOLENOID FNCT	● TCM detects an improper voltage drop when it tries to operate the solenoid valve. ● Condition of ATF pressure switch 2 is different from monitor value, and relation between gear position and actual gear ratio is irregular.	P1774	P1774*2	AT-158
ATF PRES SW 1/CIRC	● TCM detects that actual gear ratio is normal, and relation between gear position and condition of ATF pressure switch 1 is irregular during depressing accelerator pedal. (Other than during shift change)	P1841	—	AT-160
ATF PRES SW 3/CIRC	● TCM detects that actual gear ratio is normal, and relation between gear position and condition of ATF pressure switch 3 is irregular during depressing accelerator pedal. (Other than during shift change)	P1843	—	AT-162
ATF PRES SW 5/CIRC	● TCM detects that actual gear ratio is normal, and relation between gear position and condition of ATF pressure switch 5 is irregular during depressing accelerator pedal. (Other than during shift change)	P1845	—	AT-164
ATF PRES SW 6/CIRC	● TCM detects that actual gear ratio is normal, and relation between gear position and condition of ATF pressure switch 6 is irregular during depressing accelerator pedal. (Other than during shift change)	P1846	—	AT-166
NO DTC IS DETECTED FURTHER TESTING MAY BE REQUIRED	● No NG item has been detected.	X	X	—

*1: Refer to AT-43, "Malfunction Indicator Lamp (MIL)" .

*2:These malfunctions cannot be displayed MIL if another malfunction is assigned to MIL.

DATA MONITOR MODE
Display Items List

X: Standard, —: Not applicable, ▼: Option

Monitored item (Unit)	Monitor Item Selection			Remarks
	ECU INPUT SIGNALS	MAIN SIGNALS	SELECTION FROM MENU	
VHCL/S SE·A/T (km/h)	X	X	▼	Revolution sensor
VHCL/S SE·MTR (km/h)	X	—	▼	
ACCELE POSI (0.0/8)	X	—	▼	Accelerator pedal position signal
THROTTLE POSI (0.0/8)	X	X	▼	Degree of opening for accelerator recognized by the TCM For fail-safe operation, the specific value used for control is displayed.
CLSD THL POS (ON-OFF display)	X	—	▼	Signal input with CAN communications
W/O THL POS (ON-OFF display)	X	—	▼	
BRAKE SW (ON-OFF display)	X	—	▼	Stop lamp switch
GEAR	—	X	▼	Gear position recognized by the TCM updated after gear-shifting
ENGINE SPEED (rpm)	X	X	▼	
TURBINE REV (rpm)	X	X	▼	
OUTPUT REV (rpm)	X	X	▼	
GEAR RATIO	—	X	▼	
TC SLIP SPEED (rpm)	—	X	▼	Difference between engine speed and torque converter input shaft speed
F SUN GR REV (rpm)	—	—	▼	
F CARR GR REV (rpm)	—	—	▼	
ATF TEMP SE 1 (V)	X	—	▼	
ATF TEMP SE 2 (V)	X	—	▼	
ATF TEMP 1 (°C)	—	X	▼	
ATF TEMP 2 (°C)	—	X	▼	
BATTERY VOLT (V)	X	—	▼	
ATF PRES SW 1 (ON-OFF display)	X	X	▼	(for FR/B solenoid)
ATF PRES SW 2 (ON-OFF display)	X	X	▼	(for LC/B solenoid)
ATF PRES SW 3 (ON-OFF display)	X	X	▼	(for I/C solenoid)
ATF PRES SW 5 (ON-OFF display)	X	X	▼	(for D/C solenoid)
ATF PRES SW 6 (ON-OFF display)	X	X	▼	(for HLR/C solenoid)
PNP SW 1 (ON-OFF display)	X	—	▼	
PNP SW 2 (ON-OFF display)	X	—	▼	
PNP SW 3 (ON-OFF display)	X	—	▼	
PNP SW 4 (ON-OFF display)	X	—	▼	
1 POSITION SW (ON-OFF display)	X	—	▼	1st position switch

Monitored item (Unit)	Monitor Item Selection			Remarks
	ECU INPUT SIGNALS	MAIN SIG-NALS	SELEC-TION FROM MENU	
SLCT LVR POSI	—	X	▼	Selector lever position is recognized by the TCM. For fail-safe operation, the specific value used for control is displayed.
OD CONT SW (ON-OFF display)	X	—	▼	
POWERSHIFT SW (ON-OFF display)	X	—	▼	Not mounted but displayed.
HOLD SW (ON-OFF display)	X	—	▼	
MANU MODE SW (ON-OFF display)	X	—	▼	
NON M-MODE SW (ON-OFF display)	X	—	▼	
UP SW LEVER (ON-OFF display)	X	—	▼	
DOWN SW LEVER (ON-OFF display)	X	—	▼	
SFT UP ST SW (ON-OFF display)	—	—	▼	
SFT DWN ST SW (ON-OFF display)	—	—	▼	
ASCD-OD CUT (ON-OFF display)	—	—	▼	
ASCD-CRUISE (ON-OFF display)	—	—	▼	
ABS SIGNAL (ON-OFF display)	—	—	▼	
ACC OD CUT (ON-OFF display)	—	—	▼	Not mounted but displayed.
ACC SIGNAL (ON-OFF display)	—	—	▼	
TCS GR/P KEEP (ON-OFF display)	—	—	▼	
TCS SIGNAL 2 (ON-OFF display)	—	—	▼	
TCS SIGNAL 1 (ON-OFF display)	—	—	▼	
TCC SOLENOID (A)	—	X	▼	
LINE PRES SOL (A)	—	X	▼	
I/C SOLENOID (A)	—	X	▼	
FR/B SOLENOID (A)	—	X	▼	
D/C SOLENOID (A)	—	X	▼	
HLR/C SOL (A)	—	X	▼	
ON OFF SOL (ON-OFF display)	—	—	▼	LC/B solenoid
TCC SOL MON (A)	—	—	▼	
L/P SOL MON (A)	—	—	▼	
I/C SOL MON (A)	—	—	▼	
FR/B SOL MON (A)	—	—	▼	
D/C SOL MON (A)	—	—	▼	
HLR/C SOL MON (A)	—	—	▼	
ONOFF SOL MON (ON-OFF display)	—	—	▼	LC/B solenoid
P POSI IND (ON-OFF display)	—	—	▼	

Monitored item (Unit)	Monitor Item Selection			Remarks
	ECU INPUT SIGNALS	MAIN SIGNALS	SELECTION FROM MENU	
R POSI IND (ON-OFF display)	—	—	▼	
N POSI IND (ON-OFF display)	—	—	▼	
D POSI IND (ON-OFF display)	—	—	▼	
4TH POSI IND (ON-OFF display)	—	—	▼	
3RD POSI IND (ON-OFF display)	—	—	▼	
2ND POSI IND (ON-OFF display)	—	—	▼	
1ST POSI IND (ON-OFF display)	—	—	▼	
MANU MODE IND (ON-OFF display)	—	—	▼	Not mounted but displayed.
POWER M LAMP (ON-OFF display)	—	—	▼	
F-SAFE IND/L (ON-OFF display)	—	—	▼	
ATF WARN LAMP (ON-OFF display)	—	—	▼	
BACK-UP LAMP (ON-OFF display)	—	—	▼	
STARTER RELAY (ON-OFF display)	—	—	▼	
PNP SW3 MON (ON-OFF display)	—	—	▼	
C/V CLB ID1	—	—	▼	
C/V CLB ID2	—	—	▼	
C/V CLB ID3	—	—	▼	
UNIT CLB ID1	—	—	▼	
UNIT CLB ID2	—	—	▼	
UNIT CLB ID3	—	—	▼	
TRGT GR RATIO	—	—	▼	
TRGT PRES TCC (kPa)	—	—	▼	
TRGT PRES L/P (kPa)	—	—	▼	
TRGT PRES I/C (kPa)	—	—	▼	
TRGT PRE FR/B (kPa)	—	—	▼	
TRGT PRES D/C (kPa)	—	—	▼	
TRG PRE HLR/C (kPa)	—	—	▼	
SHIFT PATTERN	—	—	▼	
DRV CST JUDGE	—	—	▼	
START RLY MON	—	—	▼	
NEXT GR POSI	—	—	▼	
SHIFT MODE	—	—	▼	
MANU GR POSI	—	—	▼	
VEHICLE SPEED (km/h)	—	X	▼	Vehicle speed recognized by the TCM.

Monitored item (Unit)	Monitor Item Selection			Remarks
	ECU INPUT SIGNALS	MAIN SIGNALS	SELECTION FROM MENU	
Voltage (V)	—	—	▼	Displays the value measured by the voltage probe.
Frequency (Hz)	—	—	▼	The value measured by the pulse probe is displayed.
DUTY-HI (high) (%)	—	—	▼	
DUTY-LOW (low) (%)	—	—	▼	
PLS WIDTH-HI (ms)	—	—	▼	
PLS WIDTH-LOW (ms)	—	—	▼	

DTC WORK SUPPORT MODE

Display Items List

DTC work support item	Description	Check item
I/C SOL FUNCTN CHECK*	—	—
FR/B SOL FUNCTN CHECK*	—	—
D/C SOL FUNCTN CHECK*	—	—
HLR/C SOL FUNCTN CHECK*	—	—
LC/B SOL FUNCTN CHECK*	—	—
TCC SOL FUNCTN CHECK	Following items for “TCC solenoid function (lock-up) ” can be confirmed. ● Self-diagnosis status (whether the diagnosis is being conducted or not) ● Self-diagnosis result (OK or NG)	● TCC solenoid valve ● Hydraulic control circuit

*: Do not use, but displayed.

Diagnostic Procedure Without CONSULT-II

ECS00CN3

OBD-II SELF-DIAGNOSTIC PROCEDURE (WITH GST)

Refer to EC-128 .

OBD-II SELF-DIAGNOSTIC PROCEDURE (NO TOOLS)

Refer to AT-43, "Malfunction Indicator Lamp (MIL)" .

TCM SELF-DIAGNOSTIC PROCEDURE (NO TOOLS)

Description

In the unlikely event of a malfunction in the electrical system, when the ignition switch is switched “ON”, the O/D OFF indicator lamp lights up for 2 seconds, then flashes for 8 seconds. If there is no malfunction, when the ignition switch is turned “ON”, the indicator lamp lights up for 2 seconds. As a method for locating the suspect circuit, when the self-diagnostics start signal is input, the memory for the malfunction location is output and the O/D OFF indicator lamp flashes to display the corresponding DTC.

Diagnostic Procedure

1. CHECK O/D OFF INDICATOR LAMP

1. Start the engine with selector lever in “P” position. Warm engine to normal operating temperature.
2. Turn ignition switch ON and OFF at least twice, then leave it in the OFF position.
3. Wait 10 seconds.
4. Turn ignition switch ON. (Do not start engine.)

Does O/D OFF indicator lamp come on for about 2 seconds?

YES >> GO TO 2.
NO >> GO TO AT-178, "O/D OFF Indicator Lamp Does Not Come On" .

2. JUDGEMENT PROCEDURE STEP 1

1. Turn ignition switch OFF.
2. Push shift lock release button.
3. Move selector lever from “P” to “D” position.
4. Release accelerator pedal. (Set the closed throttle position signal “ON”.)
5. Depress brake pedal. (Stop lamp switch signal “ON”.)
6. Turn ignition switch ON.
7. Wait 3 seconds.
8. Move the selector lever from “D” to “3” position.
9. Release brake pedal. (Stop lamp switch signal “OFF”.)
10. Move the selector lever from “3” to “2” position.
11. Depress brake pedal. (Stop lamp switch signal “ON”.)
12. Depress accelerator pedal fully and release it.

>> GO TO 3.

3. CHECK SELF-DIAGNOSIS CODE

Check O/D OFF indicator lamp.
Refer to AT-97, "Judgement Self-diagnosis Code" .
If the system does not go into self-diagnostics. Refer to AT-106, "DTC P0705 PARK/NEUTRAL POSITION SWITCH" , AT-172, "CLOSED THROTTLE POSITION AND WIDE OPEN THROTTLE POSITION CIRCUIT" , AT-173, "BRAKE SIGNAL CIRCUIT" .

>> **DIAGNOSIS END**

Judgement Self-diagnosis Code

If there is a malfunction, the lamp lights up for the time corresponding to the suspect circuit.

1	Revolution sensor
2	Direct clutch solenoid valve
3	Torque converter clutch solenoid valve
4	Line pressure solenoid valve
5	Input clutch solenoid valve
6	Front brake solenoid valve
7	Low coast brake solenoid valve
8	High and low reverse clutch solenoid valve
9	PNP switch
10	A/T fluid temperature sensor
11	Turbine revolution sensor
12	A/T interlock
13	A/T 1st engine braking
14	Start signal
15	Accelerator pedal position sensor
16	Engine speed signal
17	CAN

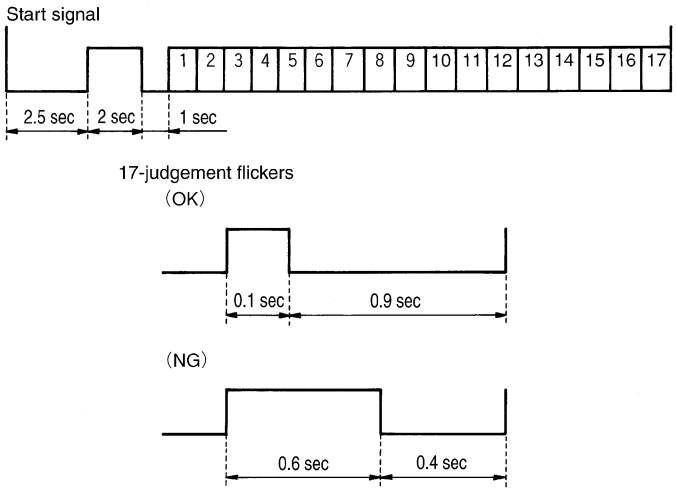

※ Solenoid valve is checked for open and short circuit, and malfunctions.

SCIA4758E

Erase Self-diagnosis

- In order to make it easier to find the cause of hard-to-duplicate malfunctions, malfunction information is stored into the control unit as necessary during use by the user. This memory is not erased no matter how many times the ignition switch is turned ON and OFF.
- However, this information is erased by turning ignition switch OFF after executing self-diagnostics or by erasing the memory using the CONSULT-II.

DTC U1000 CAN COMMUNICATION LINE

PFP:23710

Description

ECS00CN4

CAN (Controller Area Network) is a serial communication line for real time application. It is an on-vehicle multiplex communication line with high data communication speed and excellent malfunction detection ability. Many electronic control units are equipped onto a vehicle, and each control unit shares information and links with other control units during operation (not independent). In CAN communication, control units are connected with 2 communication lines (CAN H line, CAN L line) allowing a high rate of information transmission with less wiring. Each control unit transmits/receives data but selectively reads required data only.

On Board Diagnosis Logic

ECS00CN5

- This is an OBD-II self-diagnostic item.
- Diagnostic trouble code “U1000 CAN COMM CIRCUIT” with CONSULT-II or 17th judgement flicker without CONSULT-II is detected when TCM cannot communicate to other control units.

Possible Cause

ECS00CN6

Harness or connectors
(CAN communication line is open or shorted.)

DTC Confirmation Procedure

ECS00CN7

NOTE:
If “DTC Confirmation Procedure” has been previously performed, always turn ignition switch “OFF” and wait at least 10 seconds before performing the next test.
After the repair, perform the following procedure to confirm the malfunction is eliminated.

WITH CONSULT-II

1. Turn ignition switch “ON”. (Do not start engine.)
2. Select “DATA MONITOR” mode for “ENGINE” with CONSULT-II.
3. Start engine and wait for at least 6 seconds.
4. If DTC is detected, go to AT-100, "Diagnostic Procedure" .

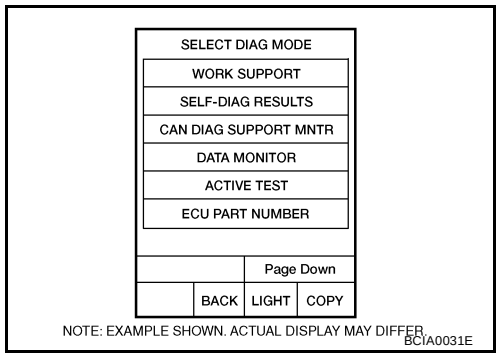

WITH GST

Follow the procedure “WITH CONSULT-II”.

Wiring Diagram — AT — CAN

ECS00CN8

AT-CAN-01

: DETECTABLE LINE FOR DTC
: NON-DETECTABLE LINE FOR DTC
: DATA LINE

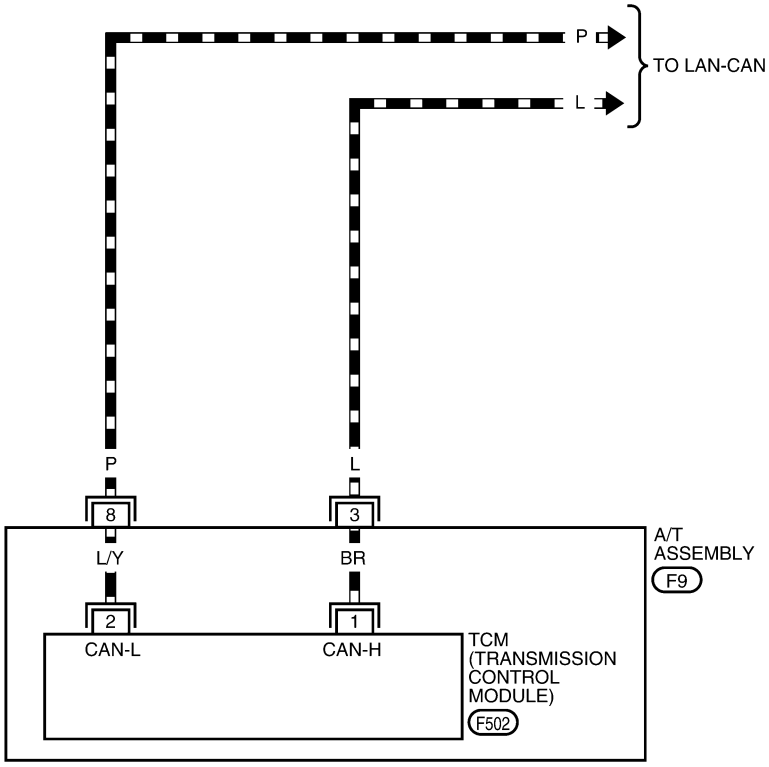

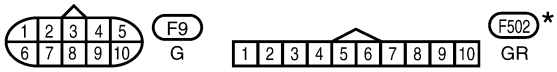

*: THIS CONNECTOR IS NOT SHOWN IN “HARNESS LAYOUT” OF PG SECTION.

BCWA0320E

TCM INPUT/OUTPUT SIGNAL REFERENCE VALUES

Refer to AT-87, "TCM Input/Output Signal Reference Values" .

Diagnostic Procedure

ECS00CN9

1. CHECK CAN COMMUNICATION CIRCUIT

With CONSULT-II

1. Turn ignition switch “ON” and start engine.
2. Select “SELF-DIAG RESULTS” mode for “A/T” with CONSULT-II.

Is any malfunction of the “CAN COMM CIRCUIT” indicated?

YES >> Print out CONSULT-II screen, GO TO LAN section. Refer to LAN-3, "Precautions When Using CONSULT-II" .

NO >> **INSPECTION END**

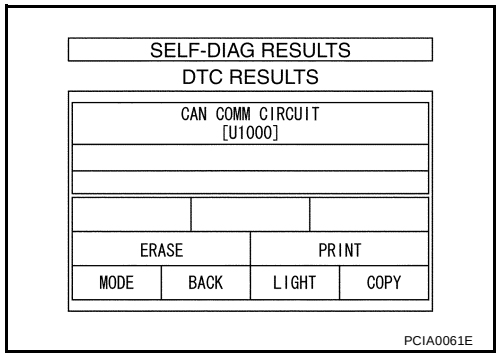

DTC P0615 START SIGNAL CIRCUIT

PFP:25230

Description

ECS00CNA

- TCM prohibits cranking other than at “P” or “N” position.

CONSULT-II Reference Value

ECS00CNB

Item name	Condition	Display value
STARTER RELAY	Selector lever in “N”, “P” positions.	ON
	Selector lever in other position.	OFF

On Board Diagnosis Logic

ECS00CNC

- This is not an OBD-II self-diagnostic item.
- Diagnostic trouble code “P0615 STARTER RELAY/CIRC” with CONSULT-II or 14th judgement flicker without CONSULT-II is detected when park/neutral (PNP) relay (starter relay) is switched “ON” other than at “P” or “N” position. (Or when switched “OFF” at “P” or “N” position).

Possible Cause

ECS00CND

- Harness or connectors
  [The park/neutral position (PNP) relay (starter relay) and TCM circuit is open or shorted.]
- Park/neutral position (PNP) relay (starter relay)

DTC Confirmation Procedure

ECS00CNE

NOTE:
If “DTC Confirmation Procedure” has been previously performed, always turn ignition switch “OFF” and wait at least 10 seconds before performing the next test.
After the repair, perform the following procedure to confirm the malfunction is eliminated.

WITH CONSULT-II

1. Turn ignition switch “ON”. (Do not start engine.)
2. Select “DATA MONITOR” mode for “A/T” with CONSULT-II.
3. Start engine.
4. Drive vehicle for at least 2 consecutive seconds.
5. If DTC is detected, go to AT-103, "Diagnostic Procedure" .

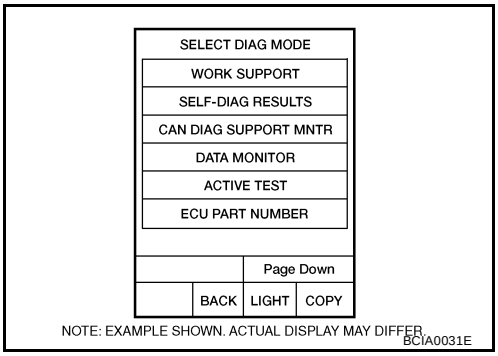

Wiring Diagram — AT — STSIG

ECS00CNF

AT-STSIG-01

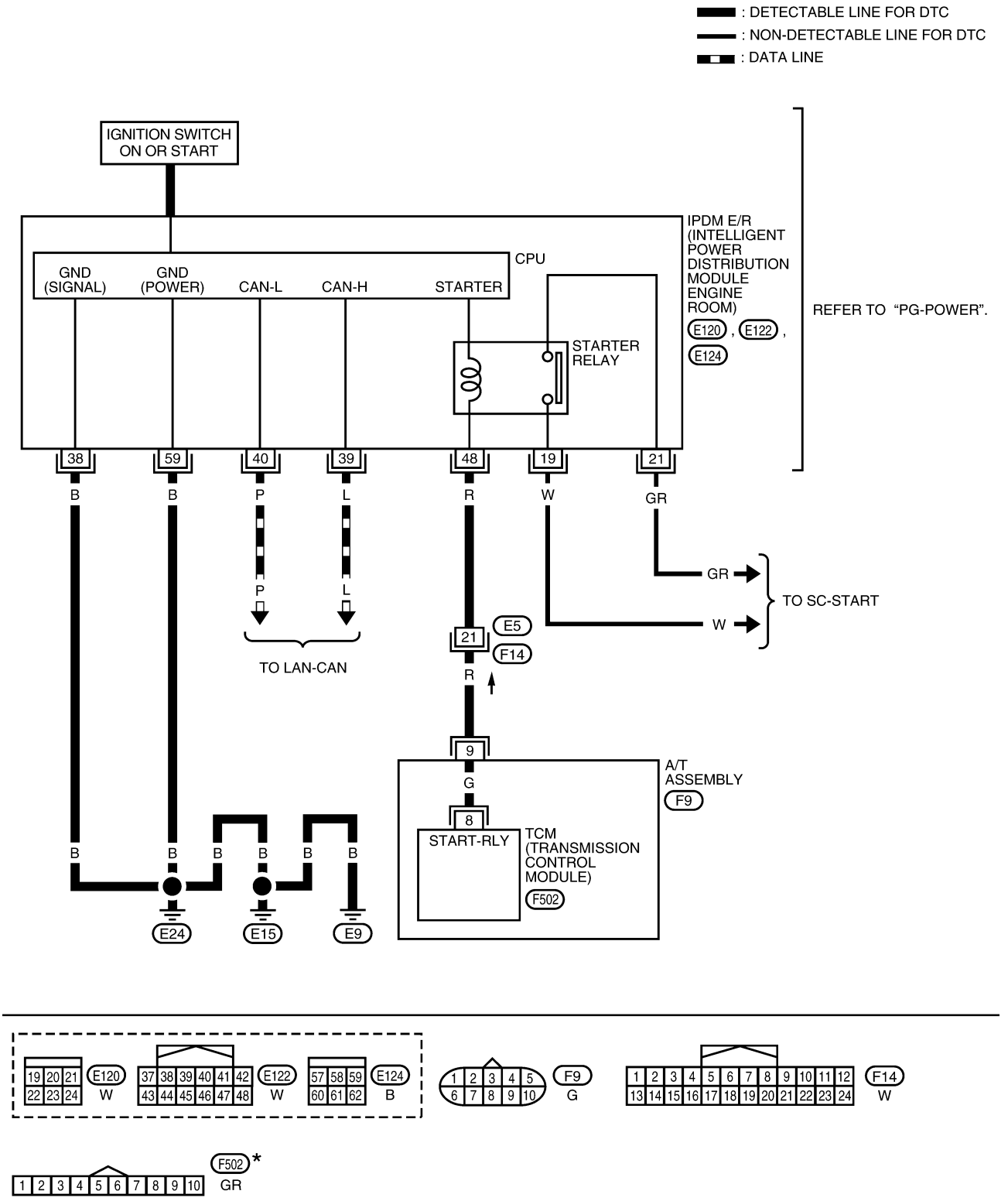

* : THIS CONNECTOR IS NOT SHOWN IN "HARNESS LAYOUT" OF PG SECTION.

BCWA0385E

TCM INPUT/OUTPUT SIGNAL REFERENCE VALUES

Refer to AT-87, "TCM Input/Output Signal Reference Values" .

Diagnostic Procedure

ECS00CNG

1. CHECK STARTER RELAY

With CONSULT-II

1. Turn ignition switch ON. (Do not start engine.)
2. Select “SELECTION FROM MENU” in “DATA MONITOR” mode for “A/T” with CONSULT-II and check monitor “STARTER RELAY” ON/OFF.

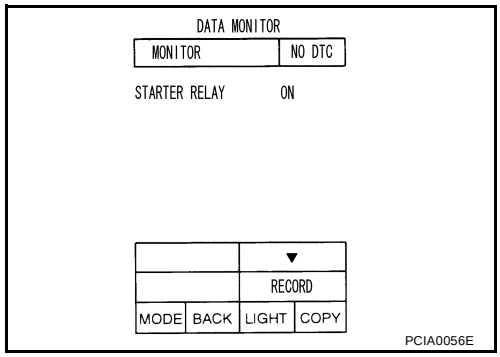

Without CONSULT-II

1. Turn ignition switch ON. (Do not start engine.)
2. Check voltage between the IPDM E/R connector and ground.

Item	Connector	Terminal		Shift position	Voltage (Approx.)
Starter relay	E122	48	Ground	“N” and “P”	Battery voltage
				“R” and “D”	0V

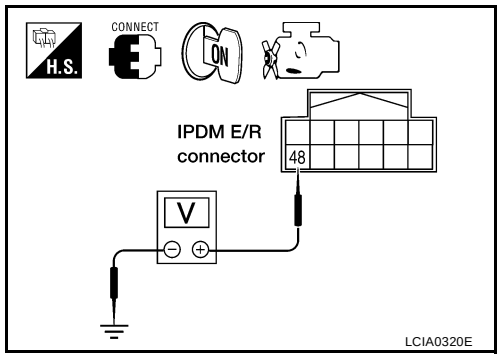

OK or NG

OK >> GO TO 5.
NG >> GO TO 2.

2. CHECK HARNESS BETWEEN A/T ASSEMBLY HARNESS CONNECTOR AND IPDM E/R CONNECTOR

1. Turn ignition switch OFF.
2. Disconnect A/T assembly harness connector and IPDM E/R connector.
3. Check continuity between A/T assembly harness connector and IPDM E/R connector.

Item	Connector	Terminal	Continuity
A/T assembly harness connector	F9	9	Yes
IPDM E/R connector	E122	48	

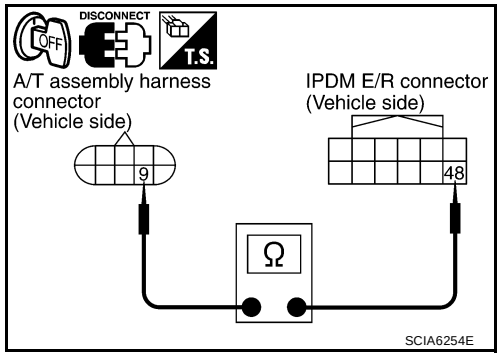

4. If OK, check harness for short to ground and short to power.
5. Reinstall any part removed.

OK or NG

OK >> GO TO 3.
NG >> Repair open circuit or short to ground or short to power in harness or connectors.

3. CHECK TERMINAL CORD ASSEMBLY

1. Remove control valve with TCM. Refer to AT-228, "Control Valve With TCM and A/T Fluid Temperature Sensor 2" .
2. Disconnect A/T assembly harness connector and TCM connector.
3. Check continuity between A/T assembly harness connector terminal and TCM connector terminal.

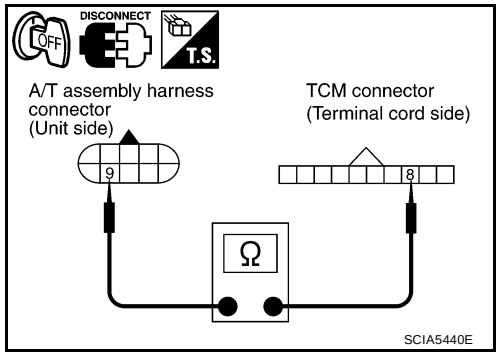

Item	Connector	Terminal	Continuity
A/T assembly harness connector	F9	9	Yes
TCM connector	F502	8	

4. If OK, check harness for short to ground and short to power.
5. Reinstall any part removed.

OK or NG

OK >> GO TO 4.
NG >> Replace open circuit or short to ground and short to power in harness or connectors.

4. DETECT MALFUNCTIONING ITEM

Check the following.

- Starter relay, Refer to SC-10, "STARTING SYSTEM" .
- IPDM E/R, Refer to PG-18, "IPDM E/R (INTELLIGENT POWER DISTRIBUTION MODULE ENGINE ROOM)" .

OK or NG

OK >> Replace the control valve with TCM. Refer to AT-228, "Control Valve With TCM and A/T Fluid Temperature Sensor 2" .
NG >> Repair or replace damaged parts.

5. CHECK DTC

Perform AT-101, "DTC Confirmation Procedure" .

OK or NG

OK >> **INSPECTION END**
NG >> GO TO 2.

DTC P0700 TCM

PFP:31036

Description

ECS00CNH

The TCM consists of a microcomputer and connectors for signal input and output and for power supply. The TCM controls the A/T.

On Board Diagnosis Logic

ECS00CNI

- This is an OBD-II self-diagnostic item.
- Diagnostic trouble code “P0700 TCM” with CONSULT-II is detected when the TCM is malfunctioning.

Possible Cause

ECS00CNJ

TCM.

DTC Confirmation Procedure

ECS00CNK

NOTE:
If “DTC Confirmation Procedure” has been previously performed, always turn ignition switch “OFF” and wait at least 10 seconds before performing the next test.
After the repair, perform the following procedure to confirm the malfunction is eliminated.

WITH CONSULT-II

1. Turn ignition switch “ON”. (Do not start engine.)
2. Select “DATA MONITOR” mode for “A/T” with CONSULT-II.
3. Start engine.
4. Run engine for at least 2 consecutive seconds at idle speed.
5. If DTC is detected, go to AT-105, "Diagnostic Procedure" .

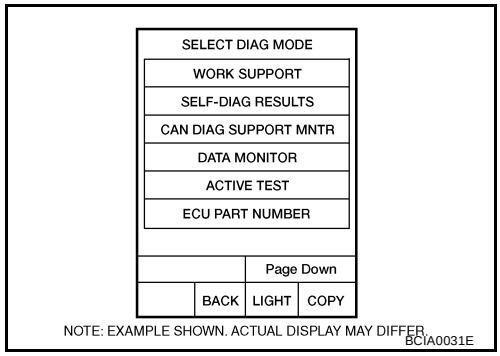

WITH GST

Follow the procedure “WITH CONSULT-II”.

Diagnostic Procedure

ECS00CNL

1. CHECK DTC

With CONSULT-II

1. Turn ignition switch “ON”. (Do not start engine.)
2. Select “SELF DIAG RESULTS” mode for “A/T” with CONSULT-II.
3. Touch “ERASE”.
4. Turn ignition switch “OFF” and wait at least 10 seconds.
5. Perform AT-105, "DTC Confirmation Procedure" .

Is the “TCM” displayed again?

YES >> Replace the control valve with TCM. Refer to AT-228, "Control Valve With TCM and A/T Fluid Temperature Sensor 2" .

NO >> **INSPECTION END**

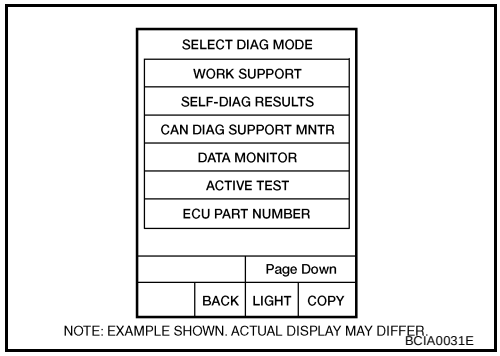

DTC P0705 PARK/NEUTRAL POSITION SWITCH

PFP:32006

Description

ECS00CNM

- The park/neutral position (PNP) switch includes a transmission position switch.
- The transmission range switch detects the selector lever position and sends a signal to the TCM.

CONSULT-II Reference Value

ECS00CNN

Item name	Condition	Display value
SLCTLVR POSI	Selector lever in “N”,“P” positions.	N/P
	Selector lever in “R” position.	R
	Selector lever in “D” position.	D
	Selector lever in “3” position.	3
	Selector lever in “2” position.	2
	Selector lever in “1” position.	1

On Board Diagnosis Logic

ECS00CNO

- This is an OBD-II self-diagnostic item.
- Diagnostic trouble code “P0705 PNP SW/CIRC” with CONSULT-II or 9th judgement flicker without CONSULT-II is detected under the following conditions.
  - When TCM does not receive the correct voltage signal from the PNP switch 1, 2, 3, 4 based on the gear position.
  - When no other position but “P” position is detected from “N” positions.

Possible Cause

ECS00CNP

- Harness or connectors
  [The park/neutral position (PNP) switch 1, 2, 3, 4 and TCM circuit is open or shorted.]
- Park/neutral position (PNP) switch 1, 2, 3, 4

DTC Confirmation Procedure

ECS00CNQ

CAUTION:
Always drive vehicle at a safe speed.

NOTE:
If “DTC Confirmation Procedure” has been previously performed, always turn ignition switch “OFF” and wait at least 10 seconds before performing the next test.
After the repair, perform the following procedure to confirm the malfunction is eliminated.

WITH CONSULT-II

1. Turn ignition switch “ON”. (Do not start engine.)
2. Select “DATA MONITOR” mode for “ENGINE” with CONSULT-II.
3. Start engine.
4. Drive vehicle and maintain the following conditions for at least 2 consecutive seconds.
   THRTL POS SEN: More than 1.2V
5. If DTC is detected, go to AT-108, "Diagnostic Procedure" .

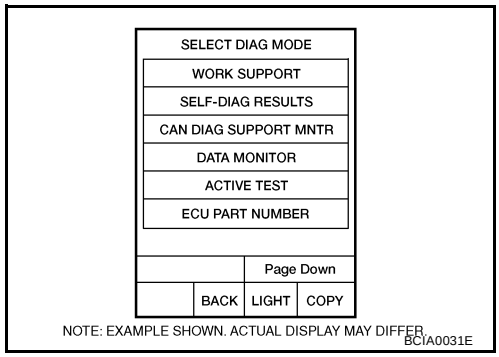

WITH GST

Follow the procedure “WITH CONSULT-II”.

Wiring Diagram — AT — PNP/SW

ECS00CNR

AT-PNP/SW-01

: DETECTABLE LINE FOR DTC
: NON-DETECTABLE LINE FOR DTC

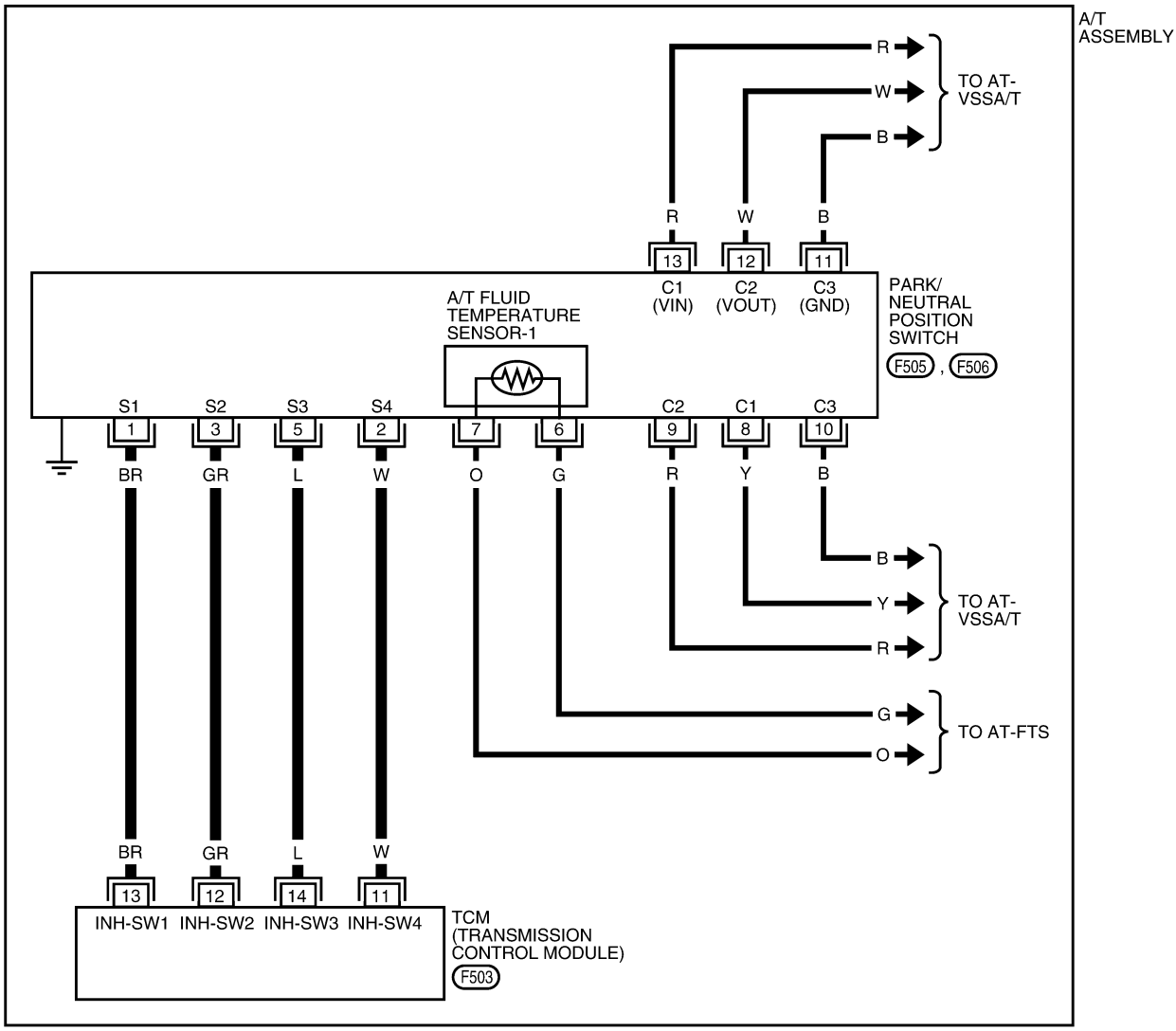

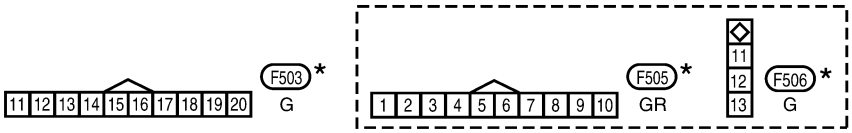

*: THIS CONNECTOR IS NOT SHOWN IN "HARNESS LAYOUT" OF PG SECTION.

BCWA0583E

Diagnostic Procedure

ECS00CNS

1. CHECK PNP SW CIRCUIT

With CONSULT-II

1. Turn ignition switch ON. (Do not start engine.)
2. Select “SELECTION FROM MENU” in “DATA MONITOR” mode for “A/T” with CONSULT-II.
3. Check if correct selector lever position (N/P, R, D, 3, 2 or 1) is displayed as selector lever is moved into each position.

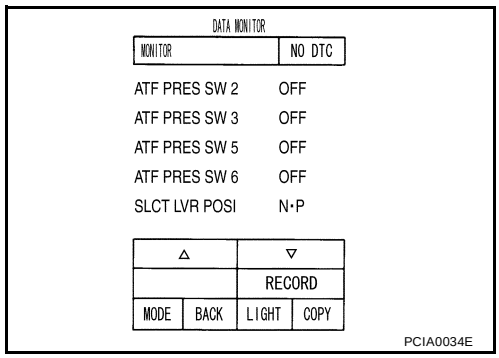

OK or NG

OK >> GO TO 5.
NG >> GO TO 2.

2. CHECK TCM POWER SUPPLY AND GROUND CIRCUIT

Check TCM power supply and ground circuit. Refer to AT-168, "MAIN POWER SUPPLY AND GROUND CIRCUIT" .

OK or NG

OK >> GO TO 3.
NG >> Repair or replace damaged parts.

3. DETECT MALFUNCTIONING ITEM

Check the following.

- A/T assembly harness connector pin terminals for damage or loose connection with harness connector.

OK or NG

OK >> GO TO 4.
NG >> Repair or replace damaged parts.

4. CHECK SUB-HARNESS

1. Remove control valve with TCM. Refer to AT-228, "Control Valve With TCM and A/T Fluid Temperature Sensor 2" .
2. Disconnect park/neutral position switch connector and TCM connector.
3. Check continuity between park/neutral position switch connector terminals and TCM connector terminals.

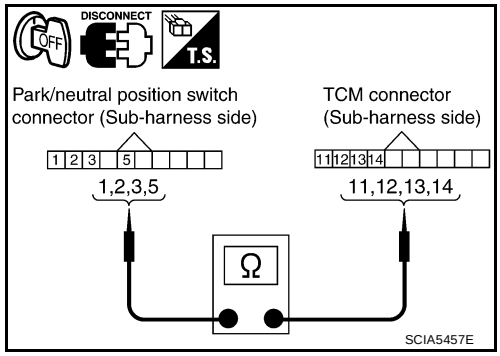

Item	Connector	Terminal	Continuity
Park/neutral position switch connector	F505	1	Yes
TCM connector	F503	13	
Park/neutral position switch connector	F505	2	Yes
TCM connector	F503	11	
Park/neutral position switch connector	F505	3	Yes
TCM connector	F503	12	
Park/neutral position switch connector	F505	5	Yes
TCM connector	F503	14	

4. If OK, check harness for short to ground and short to power.
5. Reinstall any part removed.

OK or NG

OK >> Replace the control valve with TCM. Refer to AT-228, "Control Valve With TCM and A/T Fluid Temperature Sensor 2" .

NG >> Replace open circuit or short to ground and short to power in harness or connectors.

5. CHECK DTC

Perform “DTC Confirmation Procedure”.

- Refer to AT-106, "DTC Confirmation Procedure" .

OK or NG

OK >> **INSPECTION END**

NG >> GO TO 2.

DTC P0717 TURBINE REVOLUTION SENSOR

PFP:31935

Description

ECS00CPC

The turbine revolution sensor detects input shaft rpm (revolutions per minute). It is located on the input side of the automatic transmission. Monitors revolution of sensor 1 and sensor 2 for non-standard conditions.

CONSULT-II Reference Value

ECS00CPD

Item name	Condition	Display value (rpm)
TURBINE REV	During driving (lock-up ON)	Approximately matches the engine speed.

On Board Diagnosis Logic

ECS00CPE

- This is an OBD-II self-diagnostic item.
- Diagnostic trouble code “P0717 TURBINE REV S/CIRC” with CONSULT-II or 11th judgement flicker without CONSULT-II is detected under the following conditions.
  - When TCM does not receive the proper voltage signal from the sensor.
  - When TCM detects an irregularity only at position of 4th gear for turbine revolution sensor 2.

Possible Cause

ECS00CPF

- Harness or connectors
  (The sensor circuit is open or shorted.)
- Turbine revolution sensor 1, 2

DTC Confirmation Procedure

ECS00CPG

CAUTION:
Always drive vehicle at a safe speed.

NOTE:
If “DTC Confirmation Procedure” has been previously performed, always turn ignition switch “OFF” and wait at least 10 seconds before performing the next test.
After the repair, perform the following procedure to confirm the malfunction is eliminated.

WITH CONSULT-II

1. Turn ignition switch “ON”. (Do not start engine.)
2. Select “DATA MONITOR” mode for “A/T” with CONSULT-II.
3. Start engine and maintain the following conditions for at least 5 consecutive seconds.
   VHCL SPEED SE: 40 km/h (25 MPH) or more
   ENGINE SPEED: 1,500 rpm or more
   ACCELE POS: 0.5/8 or more
   Selector lever: “D” position
   Gear position (Turbine revolution sensor 1): 4th or 5th position
   Gear position (Turbine revolution sensor 2): All position
   Driving location: Driving the vehicle uphill (increased engine load) will help maintain the driving conditions required for this test.

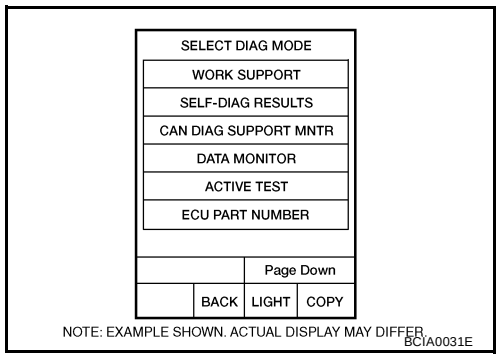

4. If DTC is detected, go to AT-111, "Diagnostic Procedure" .

WITH GST

Follow the procedure “WITH CONSULT-II”.

Diagnostic Procedure

ECS00CPH

1. CHECK INPUT SIGNAL

With CONSULT-II

1. Start engine.
2. Select “ECU INPUT SIGNALS” in “DATA MONITOR” mode for “A/T” with CONSULT-II.
3. Vehicle start and read out the value of “TURBINE REV”.

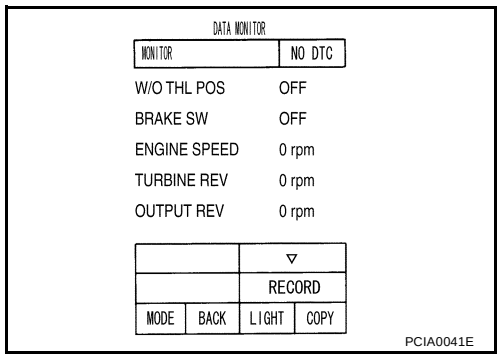

OK or NG

OK >> GO TO 4.
NG >> GO TO 2.

2. CHECK TCM POWER SUPPLY AND GROUND CIRCUIT

Check TCM power supply and ground circuit. Refer to AT-168, "MAIN POWER SUPPLY AND GROUND CIRCUIT" .

OK or NG

OK >> GO TO 3.
NG >> Repair or replace damaged parts.

3. DETECT MALFUNCTIONING ITEM

Check the following.

- The A/T assembly harness connector pin terminals for damage or loose connection with harness connector.

OK or NG

OK >> Replace the control valve with TCM. Refer to AT-228, "Control Valve With TCM and A/T Fluid Temperature Sensor 2" .
NG >> Repair or replace damaged parts.

4. CHECK DTC

Perform “DTC Confirmation Procedure”.

- Refer to AT-110, "DTC Confirmation Procedure" .

OK or NG

OK >> **INSPECTION END**
NG >> GO TO 2.

DTC P0720 VEHICLE SPEED SENSOR A/T (REVOLUTION SENSOR)

PFP:32702

Description

ECS00CNT

The revolution sensor detects the revolution of the idler gear parking pawl lock gear and emits a pulse signal. The pulse signal is sent to the TCM which converts it into vehicle speed.

CONSULT-II Reference Value

ECS00CNU

Item name	Condition	Display value (km/h)
VHCL/S SE·A/T	During driving	Approximately matches the speedometer reading.

On Board Diagnosis Logic

ECS00CNV

- This is an OBD-II self-diagnostic item.
- Diagnostic trouble code “P0720 VEH SPD SEN/CIR AT” with CONSULT-II or 1st judgement flicker without CONSULT-II is detected under the following conditions.
  - When TCM does not receive the proper voltage signal from the sensor.
  - After ignition switch is turned “ON”, irregular signal input from vehicle speed sensor MTR before the vehicle starts moving.

Possible Cause

ECS00CNW

- Harness or connectors
  (The sensor circuit is open or shorted.)
- Revolution sensor
- Vehicle speed sensor MTR

DTC Confirmation Procedure

ECS00CNX

CAUTION:
- **Always drive vehicle at a safe speed.**
- **Be careful not to rev engine into the red zone on the tachometer.**

NOTE:
If “DTC Confirmation Procedure” has been previously performed, always turn ignition switch “OFF” and wait at least 10 seconds before performing the next test.
After the repair, perform the following procedure to confirm the malfunction is eliminated.

WITH CONSULT-II

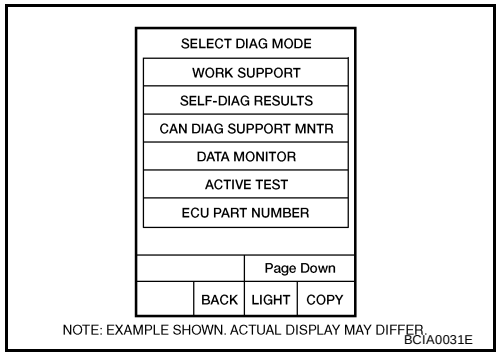

1. Turn ignition switch “ON”. (Do not start engine.)
2. Select “DATA MONITOR” mode for “A/T” with CONSULT-II.
3. Drive vehicle and check for an increase of “VHCL/S SE·A/T” value in response to “VHCL/S SE·MTR” value.
   If the check result is NG, go to AT-115, "Diagnostic Procedure" .
   If the check result is OK, go to following step.
4. Select “DATA MONITOR” mode for “ENGINE” with CONSULT-II.
5. Start engine and maintain the following conditions for at least 5 consecutive seconds.
   VHCL SPEED SE: 30 km/h (19 MPH) or more
   THRTL POS SEN: More than 1.0/8
   Selector lever: “D” position
   Driving location: Driving the vehicle uphill (increased engine load) will help maintain the driving conditions required for this test.
   If the check result is NG, go to AT-115, "Diagnostic Procedure" .
   If the check result is OK, go to following step.
6. Maintain the following conditions for at least 5 consecutive seconds.
   ENGINE SPEED: 3,500 rpm or more
   THRTL POS SEN: More than 1.0/8
   Selector lever: “D” position
   Driving location: Driving the vehicle uphill (increased engine load) will help maintain the driving conditions required for this test.
   If the check result is NG, go to AT-115, "Diagnostic Procedure" .

WITH GST

Follow the procedure “WITH CONSULT-II”.

Wiring Diagram — AT — VSSA/T

ECS00CNY

AT-VSSA/T-01

: DETECTABLE LINE FOR DTC
: NON-DETECTABLE LINE FOR DTC

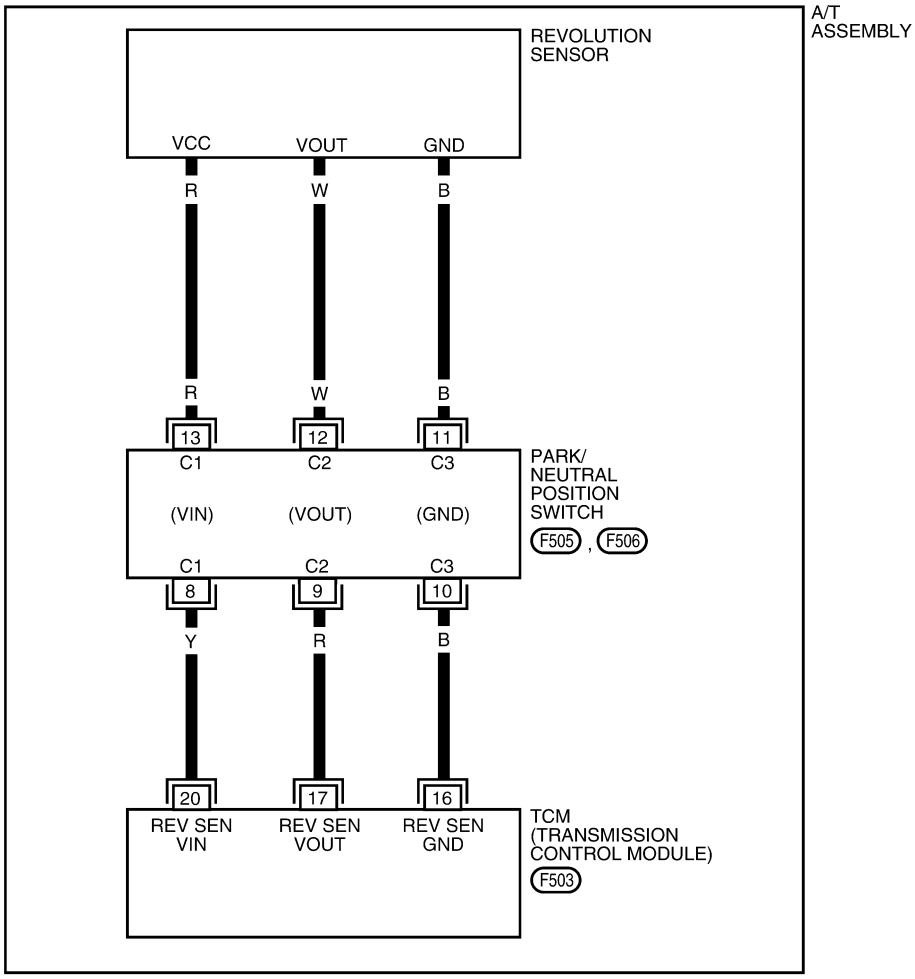

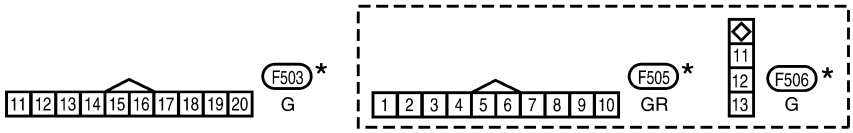

*: THIS CONNECTOR IS NOT SHOWN IN “HARNESS LAYOUT” OF PG SECTION.

BCWA0425E

Diagnostic Procedure

ECS00CNZ

1. CHECK INPUT SIGNAL

With CONSULT-II

1. Turn ignition switch ON.
2. Select “ECU INPUT SIGNALS” in “DATA MONITOR” mode for “A/T” with CONSULT-II.
3. Start the engine.
4. Read out the value of “VHCL/S SE·A/T” while driving. Check the value changes according to driving speed.

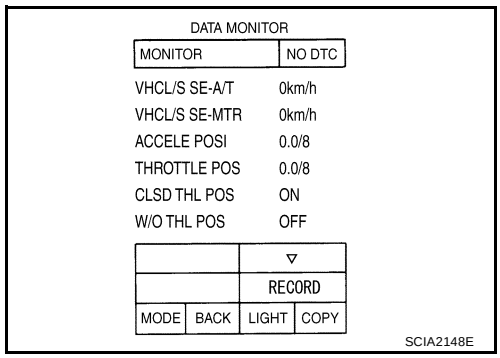

OK or NG

OK >> GO TO 6.
NG >> GO TO 2.

2. CHECK TCM POWER SUPPLY AND GROUND CIRCUIT

Check TCM power supply and ground circuit. Refer to AT-168, "MAIN POWER SUPPLY AND GROUND CIRCUIT" .

OK or NG

OK >> GO TO 3.
NG >> Repair or replace damaged parts.

3. DETECT MALFUNCTIONING ITEM

Check the following.

- The A/T assembly harness connector pin terminals for damage or loose connection with harness connector.

OK or NG

OK >> GO TO 4.
NG >> Repair or replace damaged parts.

4. CHECK SUB-HARNESS

1. Remove control valve with TCM. Refer to AT-228, "Control Valve With TCM and A/T Fluid Temperature Sensor 2" .
2. Disconnect park/neutral position switch connector and TCM connector.
3. Check continuity between park/neutral position switch connector terminals and TCM connector terminals.

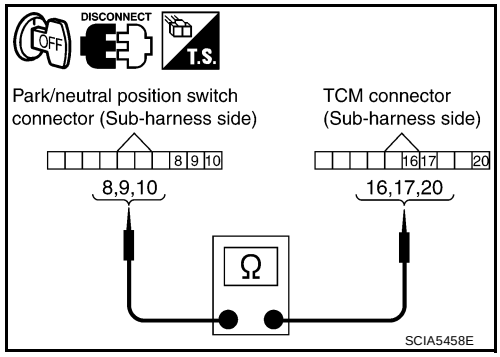

Item	Connector	Terminal	Continuity
Park/neutral position switch connector	F505	8	Yes
TCM connector	F503	20	
Park/neutral position switch connector	F505	9	Yes
TCM connector	F503	17	
Park/neutral position switch connector	F505	10	Yes
TCM connector	F503	16	

4. If OK, check harness for short to ground and short to power.
5. Reinstall any part removed.

OK or NG

OK >> GO TO 5.
NG >> Replace open circuit or short to ground and short to power in harness or connectors.

5. REPLACE THE REVOLUTION SENSOR AND CHECK DTC

1. Replace the revolution sensor. Refer to AT-259, "DISASSEMBLY" .
2. Perform “DTC Confirmation Procedure”. Refer to AT-112, "DTC Confirmation Procedure" .

OK or NG

OK >> **INSPECTION END**
NG >> Replace the control valve with TCM. Refer to AT-228, "Control Valve With TCM and A/T Fluid Temperature Sensor 2" .

6. CHECK DTC

Perform “DTC Confirmation Procedure”.

- Refer to AT-112, "DTC Confirmation Procedure" .

OK or NG

OK >> **INSPECTION END**
NG >> GO TO 2.

DTC P0725 ENGINE SPEED SIGNAL

PFP:24825

Description

ECS00CO0

The engine speed signal is sent from the ECM to the TCM.

CONSULT-II Reference Value

ECS00CO1

Item name	Condition	Display value (rpm)
ENGINE SPEED	Engine running	Closely matches the tachometer reading.

On Board Diagnosis Logic

ECS00CO2

- This is not an OBD-II self-diagnostic item.
- Diagnostic trouble code “P0725 ENGINE SPEED SIG” with CONSULT-II or 16th judgement flicker without CONSULT-II is detected when TCM does not receive the ignition signal from ECM during engine cranking or running.

Possible Cause

ECS00CO3

Harness or connectors
(The ECM to the TCM circuit is open or shorted.)

DTC Confirmation Procedure

ECS00CO4

CAUTION:
Always drive vehicle at a safe speed.

NOTE:
If “DTC Confirmation Procedure” has been previously performed, always turn ignition switch “OFF” and wait at least 10 seconds before performing the next test.
After the repair, perform the following procedure to confirm the malfunction is eliminated.

WITH CONSULT-II

1. Turn ignition switch “ON” and select “DATA MONITOR” mode for “A/T” with CONSULT-II.
2. Start engine and maintain the following conditions for at least 10 consecutive seconds.
   VHCL SPEED SE: 10 km/h (6 MPH) or more
   ACCELE POSI: More than 1/8
   Selector lever: “D” position
3. If DTC is detected, go to AT-118, "Diagnostic Procedure" .

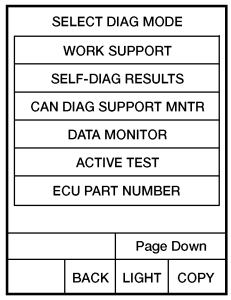

NOTE: EXAMPLE SHOWN. ACTUAL DISPLAY MAY DIFFER.
BCIA0031E

Diagnostic Procedure

ECS00CO5

1. CHECK CAN COMMUNICATION LINE

Perform the self-diagnosis. Refer to AT-90, "SELF-DIAGNOSTIC RESULT MODE" .

Is a malfunction in the CAN communication indicated in the results?

YES >> Check CAN communication line. Refer to AT-98, "DTC U1000 CAN COMMUNICATION LINE" .
NO >> GO TO 2.

2. CHECK DTC WITH TCM

With CONSULT-II

1. Start engine.
2. Select “ECU INPUT SIGNALS” in “DATA MONITOR” mode for “A/T” with CONSULT-II.
3. While monitoring engine speed, check for engine speed change corresponding to wide-open throttle position signal.

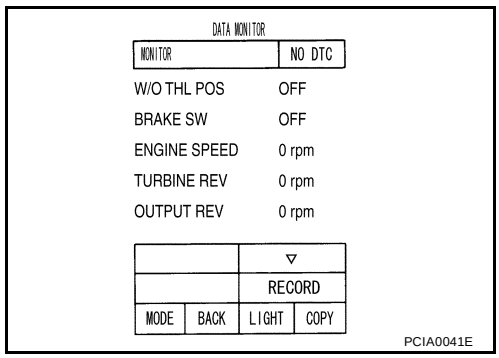

OK or NG

OK >> GO TO 3.
NG >> Check the ignition signal circuit.
- Refer to EC-660, "IGNITION SIGNAL" .

3. CHECK DTC

Perform “DTC Confirmation Procedure”.

- Refer to AT-117, "DTC Confirmation Procedure" .

OK or NG

OK >> **INSPECTION END**
NG >> GO TO 4.

4. CHECK TCM POWER SUPPLY AND GROUND CIRCUIT

Check TCM power supply and ground circuit. Refer to AT-168, "MAIN POWER SUPPLY AND GROUND CIRCUIT" .

OK or NG

OK >> GO TO 5.
NG >> Repair or replace damaged parts.

5. DETECT MALFUNCTIONING ITEM

Check the following.

- The A/T assembly harness connector pin terminals for damage or loose connection with harness connector.

OK or NG

OK >> Replace the control valve with TCM. Refer to AT-228, "Control Valve With TCM and A/T Fluid Temperature Sensor 2" .
NG >> Repair or replace damaged parts.

DTC P0740 TORQUE CONVERTER CLUTCH SOLENOID VALVE

PFP:31940

Description

ECS00CO6

- The torque converter clutch solenoid valve is activated, with the gear in D_4 , D_5 by the TCM in response to signals sent from the vehicle speed sensor and accelerator pedal position sensor (throttle position sensor). Torque converter clutch piston operation will then be controlled.
- Lock-up operation, however, is prohibited when A/T fluid temperature is too low.
- When the accelerator pedal is depressed (less than 1/8) in lock-up condition, the engine speed should not change abruptly. If there is a big jump in engine speed, there is no lock-up.

CONSULT-II Reference Value

ECS00CO7

Item name	Condition	Display value (Approx.)
TCC SOLENOID	When performing slip lock-up	0.2 - 0.4 A
	When performing lock-up	0.4 - 0.6 A

On Board Diagnosis Logic

ECS00CO8

- This is an OBD-II self-diagnostic item.
- Diagnostic trouble code “P0740 TCC SOLENOID/CIRC” with CONSULT-II or 3rd judgement flicker without CONSULT-II is detected under the following conditions.
  - When TCM detects an improper voltage drop when it tries to operate the solenoid valve.
  - When TCM detects as irregular by comparing target value with monitor value.

Possible Cause

ECS00CO9

- Torque converter clutch solenoid valve
- Harness or connectors
  (The solenoid circuit is open or shorted.)

DTC Confirmation Procedure

ECS00COA

CAUTION:
Always drive vehicle at a safe speed.

NOTE:
If “DTC Confirmation Procedure” has been previously performed, always turn ignition switch “OFF” and wait at least 10 seconds before performing the next test.
After the repair, perform the following procedure to confirm the malfunction is eliminated.

WITH CONSULT-II

1. Turn ignition switch “ON”. (Do not start engine.)
2. Select “DATA MONITOR” mode for “ENGINE” with CONSULT-II.
3. Start engine and maintain the following conditions for at least 5 consecutive seconds.
   VHCL SPEED SE: 80 km/h (50 MPH) or more
   ACCELE POS: 0.5/8 - 1.0/8
   SELECTOR LEVER: “D” position
   Driving location: Driving the vehicle uphill (increased engine load) will help maintain the driving conditions required for this test.
4. If DTC is detected go to AT-120, "Diagnostic Procedure" .

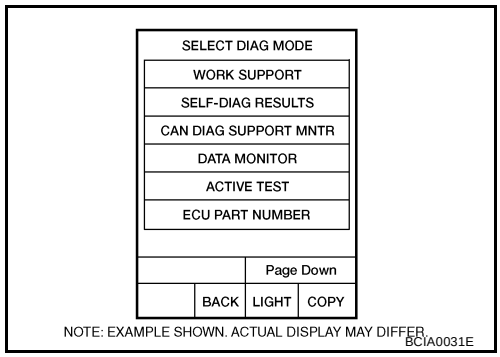

WITH GST

Follow the procedure “WITH CONSULT-II”.

Diagnostic Procedure

ECS00COB

1. CHECK INPUT SIGNAL

With CONSULT-II

1. Turn ignition switch ON.
2. Select “MAIN SIGNALS” in “DATA MONITOR” mode for “A/T” with CONSULT-II.
3. Start engine.
4. Read out the value of “TCC SOLENOID” while driving.

OK or NG

OK >> GO TO 4.
NG >> GO TO 2.

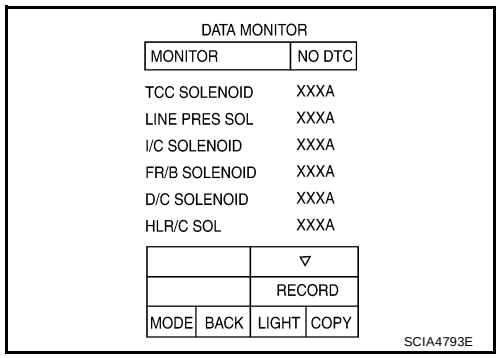

2. CHECK TCM POWER SUPPLY AND GROUND CIRCUIT

Check TCM power supply and ground circuit. Refer to AT-168, "MAIN POWER SUPPLY AND GROUND CIRCUIT" .

OK or NG

OK >> GO TO 3.
NG >> Repair or replace damaged parts.

3. DETECT MALFUNCTIONING ITEM

Check the following.

- The A/T assembly harness connector pin terminals for damage or loose connection with harness connector.

OK or NG

OK >> Replace the control valve with TCM. Refer to AT-228, "Control Valve With TCM and A/T Fluid Temperature Sensor 2" .
NG >> Repair or replace damaged parts.

4. CHECK DTC

Perform “DTC Confirmation Procedure”.

- Refer to AT-119, "DTC Confirmation Procedure" .

OK or NG

OK >> **INSPECTION END**
NG >> GO TO 2.

DTC P0744 A/T TCC S/V FUNCTION (LOCK-UP)

PFP:31940

Description

ECS00COC

This malfunction is detected when the A/T does not shift into 5th gear position or the torque converter clutch does not lock-up as instructed by the TCM. This is not only caused by electrical malfunction (circuits open or shorted) but also by mechanical malfunction such as control valve sticking, improper solenoid valve operation, etc.

CONSULT-II Reference Value

ECS00COD

Item name	Condition	Display value (Approx.)
TCC SOLENOID	When performing slip lock-up	0.2 - 0.4 A
	When performing lock-up	0.4 - 0.6 A

On Board Diagnosis Logic

ECS00COE

- This is an OBD-II self-diagnostic item.
- Diagnostic trouble code “P0744 A/T TCC S/V FNCTN” with CONSULT-II is detected under the following conditions.
  - When A/T cannot perform lock-up even if electrical circuit is good.
  - When TCM detects as irregular by comparing difference value with slip rotation.

Possible Cause

ECS00COF

- Harness or connectors
  (The solenoid circuit is open or shorted.)
- Torque converter clutch solenoid valve
- Hydraulic control circuit

DTC Confirmation Procedure

ECS00COG

CAUTION:
Always drive vehicle at a safe speed.

NOTE:
If “DTC Confirmation Procedure” has been previously performed, always turn ignition switch “OFF” and wait at least 10 seconds before performing the next test.
After the repair, perform the following procedure to confirm the malfunction is eliminated.

WITH CONSULT-II

1. Start engine and Select “TCC S/V FNCTN CHECK” of “DTC WORK SUPPORT” mode for “A/T” with CONSULT-II and touch “START”.
2. Accelerate vehicle to more than 80 km/h (50 MPH) and maintain the following condition continuously until “TESTING” has turned to “COMPLETE”. (It will take approximately 30 seconds after “TESTING” shows.)
   ACCELE POSI: More than 1.0/8 (at all times during step 4)
   TCC SOLENOID: 0.4 - 0.6 A
   Selector lever: “D” position
   [Reference speed: Constant speed of more than 80 km/h (50 MPH)]

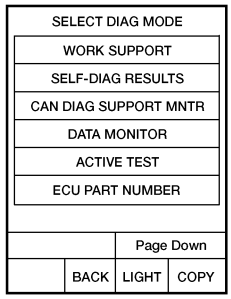

NOTE: EXAMPLE SHOWN. ACTUAL DISPLAY MAY DIFFER.
BCIA0031E

- **Make sure “GEAR” shows “5”.**
- **For shift schedule, refer to AT-64, "Vehicle Speed at Which Lock-up Occurs/Releases" .**
- **If “TESTING” does not appear on CONSULT-II for a long time, select “SELF-DIAG RESULTS”. In case a 1st trip DTC other than P0744 is shown, refer to applicable “TROUBLE DIAGNOSIS FOR DTC”.**

3. Make sure that “OK” is displayed. (If “NG” is displayed, refer to “DIAGNOSTIC PROCEDURE”.)
   Refer to AT-122, "Diagnostic Procedure" .
   Refer to shift schedule AT-64, "Vehicle Speed at Which Lock-up Occurs/Releases" .

WITH GST

Follow the procedure “WITH CONSULT-II”.

Diagnostic Procedure

ECS00COH

1. CHECK INPUT SIGNAL

With CONSULT-II

1. Turn ignition switch ON.
2. Select “MAIN SIGNALS” in “DATA MONITOR” mode for “A/T” with CONSULT-II.
3. Start the engine.
4. Read out the value of “TCC SOLENOID” while driving.

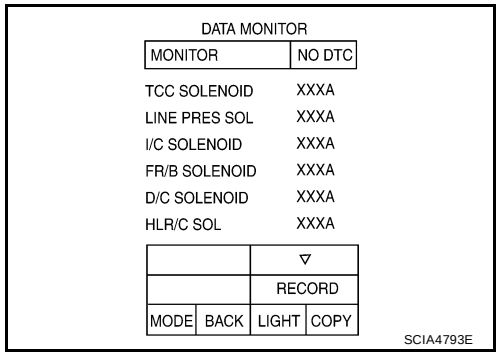

OK or NG

OK >> GO TO 4.
NG >> GO TO 2.

2. CHECK TCM POWER SUPPLY AND GROUND CIRCUIT

Check TCM power supply and ground circuit. Refer to AT-168, "MAIN POWER SUPPLY AND GROUND CIRCUIT" .

OK or NG

OK >> GO TO 3.
NG >> Repair or replace damaged parts.

3. DETECT MALFUNCTIONING ITEM

Check the following.

- The A/T assembly harness connector pin terminals for damage or loose connection with harness connector.

OK or NG

OK >> Replace the control valve with TCM. Refer to AT-228, "Control Valve With TCM and A/T Fluid Temperature Sensor 2" .
NG >> Repair or replace damaged parts.

4. CHECK DTC

Perform “DTC Confirmation Procedure”.

- Refer to AT-121, "DTC Confirmation Procedure" .

OK or NG

OK >> **INSPECTION END**
NG >> GO TO 2.

DTC P0745 LINE PRESSURE SOLENOID VALVE

PFP:31940

Description

ECS00COI

The line pressure solenoid valve regulates the oil pump discharge pressure to suit the driving condition in response to a signal sent from the TCM.

CONSULT-II Reference Value

ECS00COJ

Item name	Condition	Display value (Approx.)
LINE PRES SOL	During driving	0.2 - 0.6 A

On Board Diagnosis Logic

ECS00COK

- This is an OBD-II self-diagnostic item.
- Diagnostic trouble code “P0745 L/PRESS SOL/CIRC” with CONSULT-II or 4th judgement flicker without CONSULT-II is detected under the following conditions.
  - When TCM detects an improper voltage drop when it tries to operate the solenoid valve.
  - When TCM detects as irregular by comparing target value with monitor value.

Possible Cause

ECS00COL

- Harness or connectors
  (The solenoid circuit is open or shorted.)
- Line pressure solenoid valve

DTC Confirmation Procedure

ECS00COM

NOTE:
If “DTC Confirmation Procedure” has been previously performed, always turn ignition switch “OFF” and wait at least 10 seconds before performing the next test.
After the repair, perform the following procedure to confirm the malfunction is eliminated.

WITH CONSULT-II

1. Turn ignition switch “ON” and select “DATA MONITOR” mode for “ENGINE” with CONSULT-II.
2. Engine start and wait at least 5 second.
3. If DTC is detected, go to AT-124, "Diagnostic Procedure" .

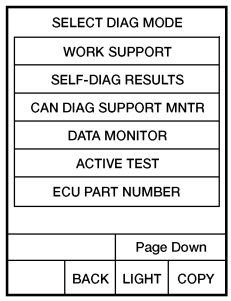

NOTE: EXAMPLE SHOWN. ACTUAL DISPLAY MAY DIFFER.
BCIA0031E

WITH GST

Follow the procedure “WITH CONSULT-II”.

Diagnostic Procedure

ECS00CON

1. CHECK INPUT SIGNAL

With CONSULT-II

1. Turn ignition switch ON.
2. Select “MAIN SIGNALS” in “DATA MONITOR” mode for “A/T” with CONSULT-II.
3. Start the engine.
4. Read out the value of “LINE PRES SOL” while driving.

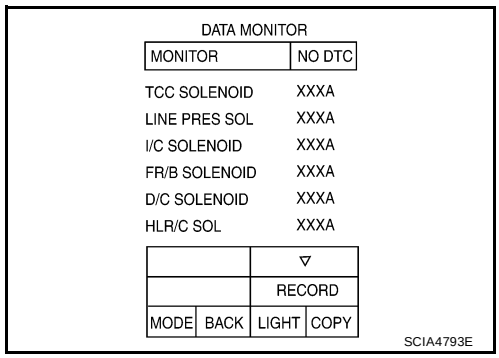

OK or NG

OK >> GO TO 4.
NG >> GO TO 2.

2. CHECK TCM POWER SUPPLY AND GROUND CIRCUIT

Check TCM power supply and ground circuit. Refer to AT-168, "MAIN POWER SUPPLY AND GROUND CIRCUIT" .

OK or NG

OK >> GO TO 3.
NG >> Repair or replace damaged parts.

3. DETECT MALFUNCTIONING ITEM

Check the following.

- The A/T assembly harness connector pin terminals for damage or loose connection with harness connector.

OK or NG

OK >> Replace the control valve with TCM. Refer to AT-228, "Control Valve With TCM and A/T Fluid Temperature Sensor 2" .
NG >> Repair or replace damaged parts.

4. CHECK DTC

Perform “DTC Confirmation Procedure”.

- Refer to AT-123, "DTC Confirmation Procedure" .

OK or NG

OK >> **INSPECTION END**
NG >> GO TO 2.

DTC P1705 THROTTLE POSITION SENSOR

PFP:22620

Description

ECS00COY

Electric throttle control actuator consists of throttle control motor, accelerator pedal position sensor, throttle position sensor, etc. The actuator sends a signal to the ECM, and ECM sends signals to TCM with CAN communication.

CONSULT-II Reference Value

ECS00COZ

Item name	Condition	Display value (Approx.)
ACCELE POSI	Released accelerator pedal.	0.0/8
	Fully depressed accelerator pedal.	8/8

On Board Diagnosis Logic

ECS00CP0

- This is not an OBD-II self-diagnostic item.
- Diagnostic trouble code “P1705 TP SEN/CIRC A/T” with CONSULT-II or 15th judgement flicker without CONSULT-II is detected when TCM does not receive the proper accelerator pedal position signals (input by CAN communication) from ECM.

Possible Cause

ECS00CP1

Harness or connectors
(The sensor circuit is open or shorted.)

DTC Confirmation Procedure

ECS00CP2

NOTE:
If “DTC Confirmation Procedure” has been previously performed, always turn ignition switch “OFF” and wait at least 10 seconds before performing the next test.
After the repair, perform the following procedure to confirm the malfunction is eliminated.

WITH CONSULT-II

1. Turn ignition switch “ON”. (Do not start engine.)
2. Select “DATA MONITOR” mode for “A/T” with CONSULT-II.
3. Start engine and let it idle for 1 second.
4. If DTC is detected, go to AT-126, "Diagnostic Procedure" .

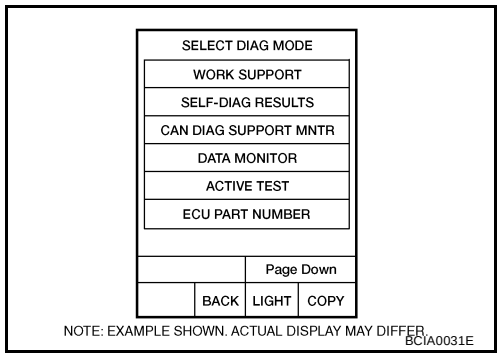

Diagnostic Procedure

ECS00CP3

1. CHECK CAN COMMUNICATION LINE

Perform the self-diagnosis. Refer to AT-90, "SELF-DIAGNOSTIC RESULT MODE" .

Is a malfunction in the CAN communication indicated in the results?

YES >> Check CAN communication line. Refer to AT-98, "DTC U1000 CAN COMMUNICATION LINE" .
NO >> GO TO 2.

2. CHECK DTC WITH TCM

With CONSULT-II

1. Turn ignition switch ON. (Do not start engine.)
2. Select “ECU INPUT SIGNALS” in “DATA MONITOR” mode for “A/T” with CONSULT-II.
3. Depress accelerator pedal and read out the value of “ACCELE POSI”.
4. Select “SELF-DIAG RESULTS” mode for “A/T” with CONSULT-II. Refer to AT-90, "SELF-DIAGNOSTIC RESULT MODE" .

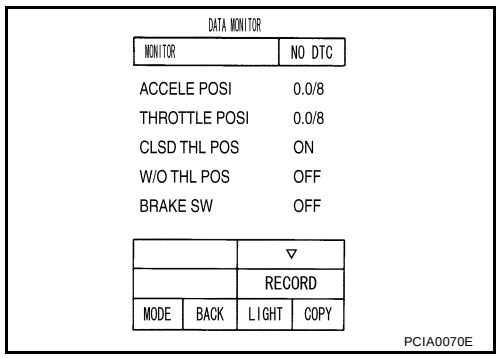

OK or NG

OK >> GO TO 4.
NG >> GO TO 3.

3. CHECK DTC WITH ECM

With CONSULT-II

1. Turn ignition switch “ON”. (Do not start engine.)
2. Select “SELF-DIAG RESULTS” mode for “ENGINE” with CONSULT-II. Refer to AT-88, "CONSULT-II Function (A/T)" .

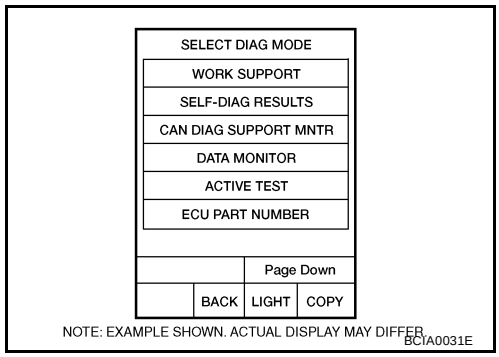

OK or NG

OK >> GO TO 4.
NG >> Check the DTC detected item. Refer to EC-115, "CONSULT-II Function (ENGINE)" .
- If CAN communication line is detected, go to AT-98, "DTC U1000 CAN COMMUNICATION LINE" .

4. CHECK DTC

Perform “DTC Confirmation Procedure”.

- Refer to AT-125, "DTC Confirmation Procedure" .

OK or NG

OK >> **INSPECTION END**
NG >> GO TO 5.

5. CHECK TCM POWER SUPPLY AND GROUND CIRCUIT

Check TCM power supply and ground circuit. Refer to AT-168, "MAIN POWER SUPPLY AND GROUND CIRCUIT" .

OK or NG

OK >> GO TO 6.
NG >> Repair or replace damaged parts.

6. DETECT MALFUNCTIONING ITEM

Check the following.

- The A/T assembly harness connector pin terminals for damage or loose connection with harness connector.

OK or NG

OK >> Replace the control valve with TCM. Refer to AT-228, "Control Valve With TCM and A/T Fluid Temperature Sensor 2" .

NG >> Repair or replace damaged parts.

DTC P1710 A/T FLUID TEMPERATURE SENSOR CIRCUIT

PFP:31940

Description

ECS00CP4

The A/T fluid temperature sensor detects the A/T fluid temperature and sends a signal to the TCM.

CONSULT-II Reference Value

ECS00CP5

Item name	Condition °C (°F)	Display value (Approx.)
ATF TEMP SE 1	0°C (32° F) - 20°C (68°F) - 80°C (176°F)	3.3 - 2.7 - 0.9 V
ATF TEMP SE 2		3.3 - 2.5 - 0.7 V

On Board Diagnosis Logic

ECS00CP6

- This is an OBD-II self-diagnostic item.
- Diagnostic trouble code “P1710 (A/T), P0710 (ENGINE) ATF TEMP SEN/CIRC” with CONSULT-II or 10th judgement flicker without CONSULT-II is detected when TCM receives an excessively low or high voltage from the sensor.

Possible Cause

ECS00CP7

- Harness or connectors
  (The sensor circuit is open or shorted.)
- A/T fluid temperature sensors 1, 2

DTC Confirmation Procedure

ECS00CP8

CAUTION:
Always drive vehicle at a safe speed.

NOTE:
If “DTC Confirmation Procedure” has been previously performed, always turn ignition switch “OFF” and wait at least 10 seconds before performing the next test.
After the repair, perform the following procedure to confirm the malfunction is eliminated.

WITH CONSULT-II

1. Turn ignition switch “ON”. (Do not start engine.)
2. Select “DATA MONITOR” mode for “ENGINE” with CONSULT-II.
3. Start engine and maintain the following conditions for at least 10 minutes (Total). (It is not necessary to maintain continuously.)
   VHCL SPEED SE: 10 km/h (6 MPH) or more
   THRTL POS SEN: More than 1.0/8
   Selector lever: “D” position
4. If DTC is detected, go to AT-130, "Diagnostic Procedure" .

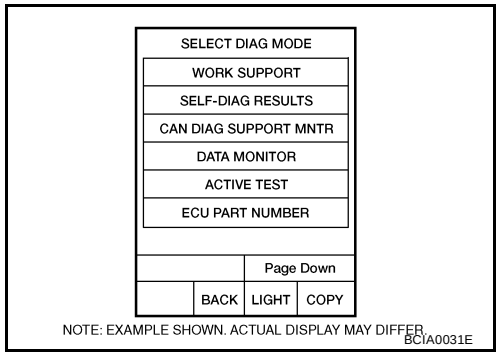

WITH GST

Follow the procedure “WITH CONSULT-II”.

Wiring Diagram — AT — FTS

ECS00CP9

AT-FTS-01

: DETECTABLE LINE FOR DTC
: NON-DETECTABLE LINE FOR DTC

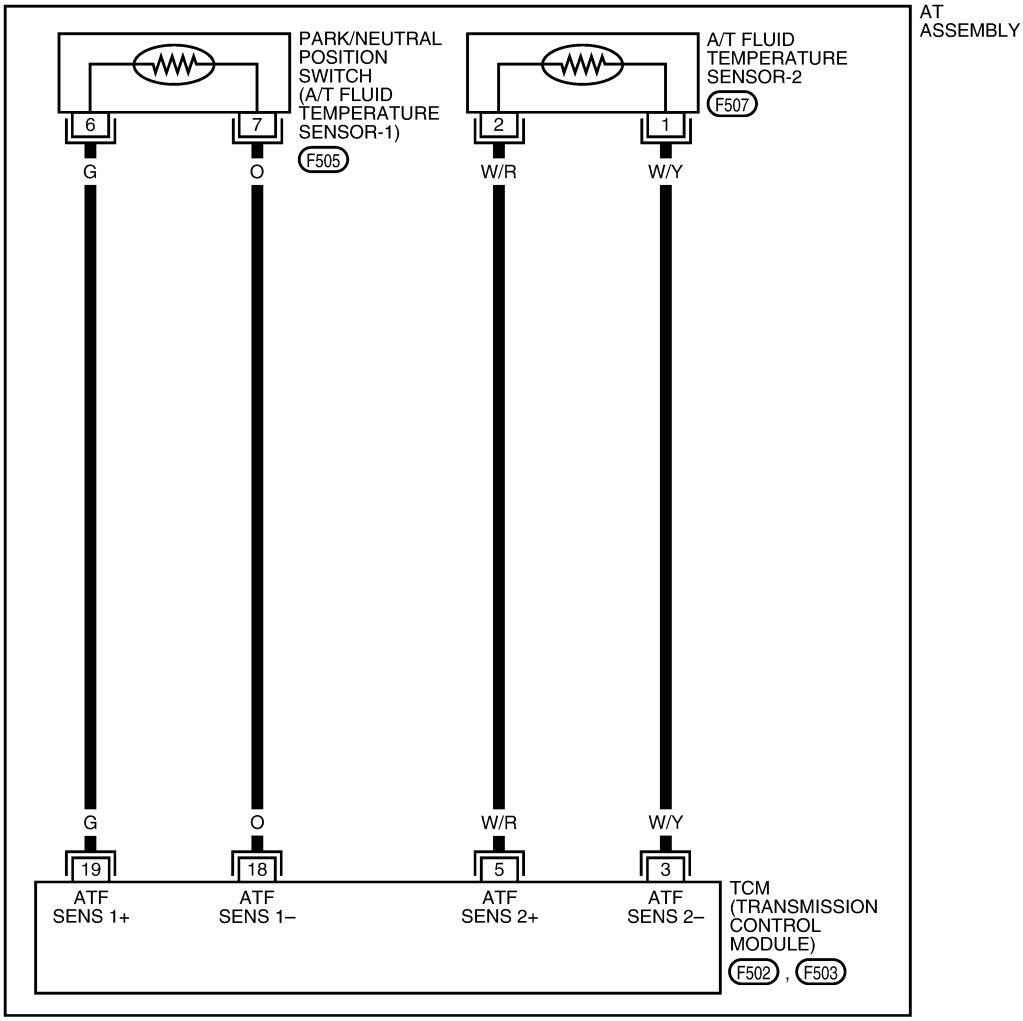

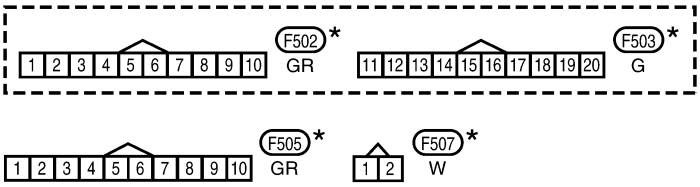

*: THIS CONNECTOR IS NOT SHOWN IN “HARNESS LAYOUT” OF PG SECTION.

BCWA0323E

Diagnostic Procedure

ECS00CPA

1. CHECK A/T FLUID TEMPERATURE SENSOR 1 SIGNAL

With CONSULT-II

1. Start engine.
2. Select “ECU INPUT SIGNALS” in “DATA MONITOR” mode for “A/T” with CONSULT-II.
3. Read out the value of “ATF TEMP SE 1”.

OK or NG

OK >> GO TO 2.
NG >> GO TO 3.

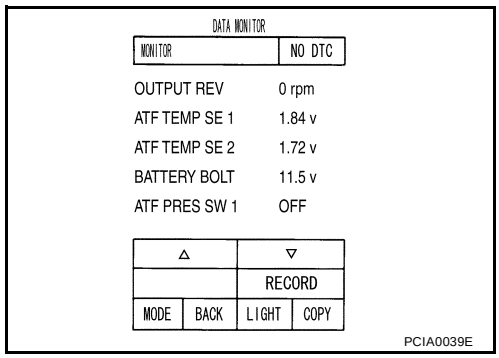

2. CHECK A/T FLUID TEMPERATURE SENSOR 2 SIGNAL

With CONSULT-II

1. Start engine.
2. Select “ECU INPUT SIGNALS” in “DATA MONITOR” mode for “A/T” with CONSULT-II.
3. Read out the value of “ATF TEMP SE 2”.

OK or NG

OK >> GO TO 8.
NG >> GO TO 5.

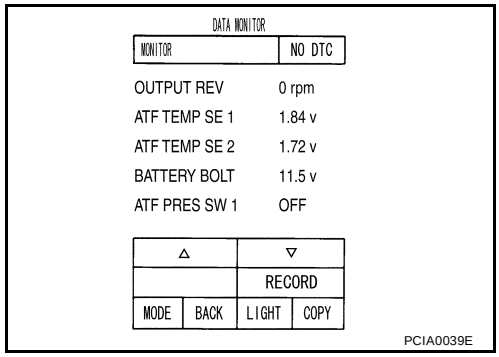

3. CHECK A/T FLUID TEMPERATURE SENSOR 1

Check A/T fluid temperature sensor 1. Refer to AT-132, "A/T FLUID TEMPERATURE SENSOR 1" .

OK or NG

OK >> GO TO 4.
NG >> Replace the control valve with TCM. Refer to AT-228, "Control Valve With TCM and A/T Fluid Temperature Sensor 2" .

4. CHECK SUB-HARNESS

1. Disconnect park/neutral position switch connector and TCM connector.
2. Check continuity between park/neutral position switch connector terminals and TCM connector terminals.

Item	Connector	Terminal	Continuity
Park/neutral position switch connector	F505	6	Yes
TCM connector	F503	19	
Park/neutral position switch connector	F505	7	Yes
TCM connector	F503	18	

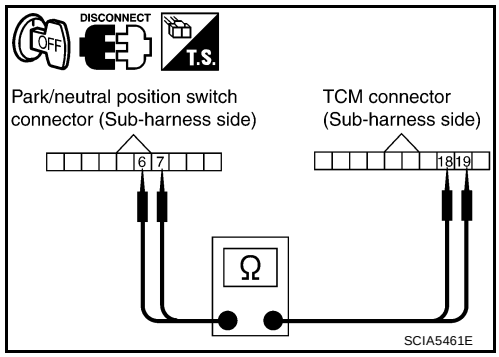

3. If OK, check harness for short to ground and short to power.

OK or NG

OK >> GO TO 7.
NG >> Replace open circuit or short to ground and short to power in harness or connectors.

5. CHECK A/T FLUID TEMPERATURE SENSOR 2

Check A/T fluid temperature sensor 2. Refer to AT-132, "A/T FLUID TEMPERATURE SENSOR 2" .

OK or NG

OK >> GO TO 6.
NG >> Replace the A/T fluid temperature sensor 2. Refer to AT-235, "A/T FLUID TEMPERATURE SENSOR 2 REMOVAL AND INSTALLATION" .

6. CHECK TERMINAL CORD ASSEMBLY

1. Disconnect A/T fluid temperature sensor 2 connector and TCM connector.
2. Check continuity between A/T fluid temperature sensor 2 connector terminals and TCM connector terminals.

Item	Connector	Terminal	Continuity
A/T fluid temperature sensor 2 connector	F507	1	Yes
TCM connector	F502	3	
A/T fluid temperature sensor 2 connector	F507	2	Yes
TCM connector	F502	5	

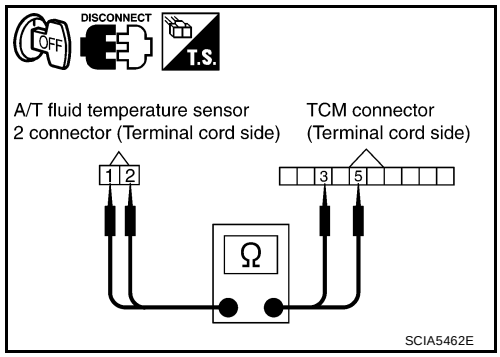

3. If OK, check harness for short to ground and short to power.

OK or NG

OK >> GO TO 7.
NG >> Replace open circuit or short to ground and short to power in harness or connectors.

7. CHECK TCM POWER SUPPLY AND GROUND CIRCUIT

1. Check TCM power supply and ground circuit. Refer to AT-168, "MAIN POWER SUPPLY AND GROUND CIRCUIT" .
2. Reinstall any part removed.

OK or NG

OK >> Replace the control valve with TCM. Refer to AT-228, "Control Valve With TCM and A/T Fluid Temperature Sensor 2" .
NG >> Repair or replace damaged parts.

8. CHECK DTC

Perform “DTC Confirmation Procedure”.

- Refer to AT-128, "DTC Confirmation Procedure" .

OK or NG

OK >> **INSPECTION END**
NG >> GO TO 1.

Component Inspection

ECS00CPB

A/T FLUID TEMPERATURE SENSOR 1

1. Remove control valve with TCM. Refer to AT-228, "Control Valve With TCM and A/T Fluid Temperature Sensor 2" .
2. Check resistance between terminals.

Name	Connector	Terminal	Temperature °C (°F)	Resistance (Approx.)
A/T fluid temperature sensor 1	F505	6 - 7	0 (32)	15 kΩ
			20 (68)	6.5 kΩ
			80 (176)	0.9 kΩ

3. If NG, replace the control valve with TCM. Refer to AT-228, "Control Valve With TCM and A/T Fluid Temperature Sensor 2" .

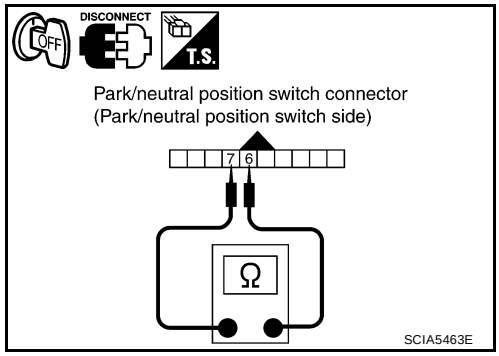

A/T FLUID TEMPERATURE SENSOR 2

1. Remove A/T fluid temperature sensor 2. Refer to AT-235, "A/T FLUID TEMPERATURE SENSOR 2 REMOVAL AND INSTALLATION" .
2. Check resistance between terminals.

Name	Connector	Terminal	Temperature °C (°F)	Resistance (Approx.)
A/T fluid temperature sensor 2	F507	1 - 2	0 (32)	10 kΩ
			20 (68)	4 kΩ
			80 (176)	0.5 kΩ

3. If NG, replace the A/T fluid temperature sensor 2. Refer to AT-235, "A/T FLUID TEMPERATURE SENSOR 2 REMOVAL AND INSTALLATION" .

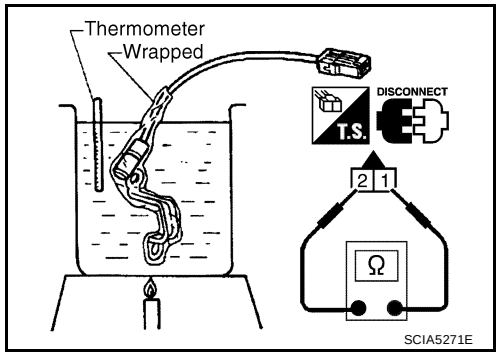

DTC P1721 VEHICLE SPEED SENSOR MTR

PFP:24814

Description

ECS00CPI

The vehicle speed sensor·MTR signal is transmitted from combination meter to TCM by CAN communication line. The signal functions as an auxiliary device to the revolution sensor when it is malfunctioning. The TCM will then use the vehicle speed sensor·MTR signal.

CONSULT-II Reference Value

ECS00CPJ

Item name	Condition	Display value (km/h)
VHCL/S SE·MTR	During driving	Approximately matches the speedometer reading.

On Board Diagnosis Logic

ECS00CPK

- This is not an OBD-II self-diagnostic item.
- Diagnostic trouble code “P1721 VHE SPD SE·MTR” with CONSULT-II is detected when TCM does not receive the proper vehicle speed sensor MTR signal (input by CAN communication) from combination meter.

Possible Cause

ECS00CPL

Harness or connectors
(The sensor circuit is open or shorted.)

DTC Confirmation Procedure

ECS00CPM

CAUTION:
Always drive vehicle at a safe speed.

NOTE:
If “DTC Confirmation Procedure” has been previously performed, always turn ignition switch “OFF” and wait at least 10 seconds before performing the next test.
After the repair, perform the following procedure to confirm the malfunction is eliminated.

WITH CONSULT-II

1. Turn ignition switch “ON”. (Do not start engine.)
2. Select “DATA MONITOR” mode for “A/T” with CONSULT-II.
3. Start engine and maintain the following conditions for at least 5 consecutive seconds.
   ACCELE POS: 1/8 or less
   VHCL SPEED SE: 30 km/h (17 MPH) or more
4. If DTC is detected, go to AT-134, "Diagnostic Procedure" .

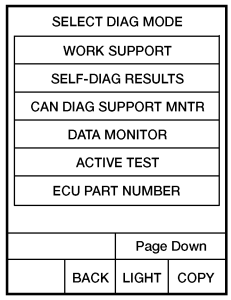

NOTE: EXAMPLE SHOWN. ACTUAL DISPLAY MAY DIFFER.
BCIA0031E

Diagnostic Procedure

ECS00CPN

1. CHECK CAN COMMUNICATION LINE

Perform the self-diagnosis. Refer to AT-90, "SELF-DIAGNOSTIC RESULT MODE" .

Is malfunction in the CAN communication indicated in the result?

YES >> Check CAN communication line. Refer to AT-98, "DTC U1000 CAN COMMUNICATION LINE" .
NO >> GO TO 2.

2. CHECK INPUT SIGNAL

With CONSULT-II

1. Start engine.
2. Select “ECU INPUT SIGNALS” in “DATA MONITOR” mode for “A/T” with CONSULT-II.
3. Drive vehicle and read out the value of “VHCL/S SE·MTR”.

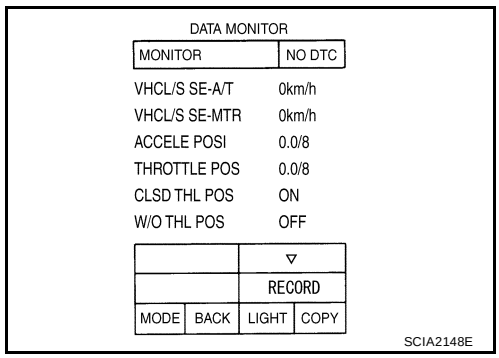

OK or NG

OK >> GO TO 4.
NG >> GO TO 3.

3. CHECK COMBINATION METERS

Check combination meters. Refer to DI-17, "How to Proceed With Trouble Diagnosis" .

OK or NG

OK >> GO TO 4.
NG >> Repair or replace damaged parts.

4. CHECK DTC

Perform “DTC Confirmation Procedure”.

- Refer to AT-133, "DTC Confirmation Procedure" .

OK or NG

OK >> **INSPECTION END**
NG >> GO TO 5.

5. CHECK TCM POWER SUPPLY AND GROUND CIRCUIT

Check TCM power supply and ground circuit. Refer to AT-168, "MAIN POWER SUPPLY AND GROUND CIRCUIT" .

OK or NG

OK >> GO TO 6.
NG >> Repair or replace damaged parts.

6. DETECT MALFUNCTIONING ITEM

Check the following.

- The A/T assembly harness connector pin terminals for damage or loose connection with harness connector.

OK or NG

OK >> Replace the control valve with TCM. Refer to AT-228, "Control Valve With TCM and A/T Fluid Temperature Sensor 2" .
NG >> Repair or replace damaged parts.

DTC P1730 A/T INTERLOCK

PFP:00000

Description

ECS00CPO

- Fail-safe function to detect interlock conditions.

On Board Diagnosis Logic

ECS00CPP

- This is an OBD-II self-diagnostic item.
- Diagnostic trouble code “P1730 A/T INTERLOCK” with CONSULT-II or 12th judgement flicker without CONSULT-II is detected when TCM does not receive the proper voltage signal from the sensor and switch.
- TCM monitors and compares gear position and conditions of each ATF pressure switch when gear is steady.

Possible Cause

ECS00CPQ

- Harness or connectors
  (The solenoid and switch circuit is open or shorted.)
- Low coast brake solenoid valve
- ATF pressure switch 2

DTC Confirmation Procedure

ECS00CPR

NOTE:
If “DTC Confirmation Procedure” has been previously performed, always turn ignition switch “OFF” and wait at least 10 seconds before performing the next test.
After the repair, perform the following procedure to confirm the malfunction is eliminated.

WITH CONSULT-II

1. Turn ignition switch “ON”. (Do not start engine.)
2. Select “DATA MONITOR” mode for “A/T” with CONSULT-II.
3. Start engine.
4. Drive vehicle and maintain the following conditions for at least 2 consecutive seconds.
   Selector lever: “D” position
5. If DTC is detected, go to AT-136, "Diagnostic Procedure" .

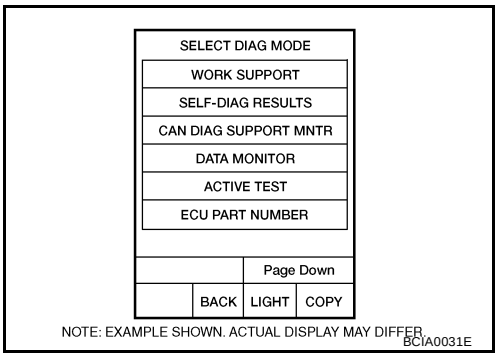

WITH GST

Follow the procedure “WITH CONSULT-II”.

Judgement of A/T Interlock

ECS00CPS

When A/T Interlock is judged to be malfunctioning, the vehicle should be fixed in 2nd gear, and should be set in a condition in which it can travel.
When one of the following fastening patterns is detected, the fail-safe function in correspondence with the individual pattern should be performed.

A/T INTERLOCK COUPLING PATTERN TABLE

●: NG, X: OK

Gear position		ATF pressure switch output					Fail-safe function	Clutch pressure output pattern after fail-safe function					
		SW3 (I/C)	SW6 (HLR/C)	SW5 (D/C)	SW1 (FR/B)	SW2 (LC/B)		I/C	HLR/C	D/C	FR/B	LC/B	L/U
A/T interlock coupling pattern	3rd	–	X	X	–	●	Held in 2nd gear	OFF	OFF	ON	OFF	OFF	OFF
	4th	–	X	X	–	●	Held in 2nd gear	OFF	OFF	ON	OFF	OFF	OFF
	5th	X	X	–	X	●	Held in 2nd gear	OFF	OFF	ON	OFF	OFF	OFF

Diagnostic Procedure

ECS00CPT

1. SELF-DIAGNOSIS

With CONSULT-II

1. Drive vehicle.
2. Stop vehicle and turn ignition switch OFF.
3. Turn ignition switch ON.
4. Select “SELF-DIAG RESULTS” mode for “A/T” with CONSULT-II.

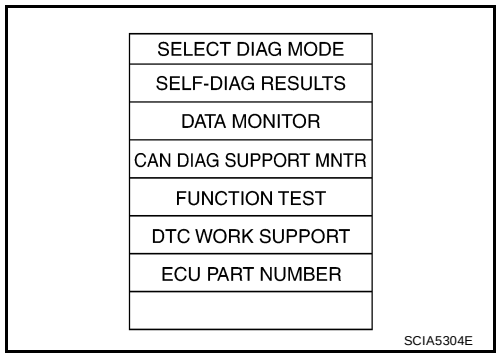

OK or NG

OK >> GO TO 2.
NG >> Check low coast brake solenoid valve circuit and function. Refer to AT-156, "DTC P1772 LOW COAST BRAKE SOLENOID VALVE" , AT-158, "DTC P1774 LOW COAST BRAKE SOLENOID VALVE FUNCTION" .

2. CHECK DTC

Perform “DTC Confirmation Procedure”.

- Refer to AT-135, "DTC Confirmation Procedure" .

OK or NG

OK >> **INSPECTION END**
NG >> GO TO 3.

3. CHECK TCM POWER SUPPLY AND GROUND CIRCUIT

Check TCM power supply and ground circuit. Refer to AT-168, "MAIN POWER SUPPLY AND GROUND CIRCUIT" .

OK or NG

OK >> GO TO 4.
NG >> Repair or replace damaged parts.

4. DETECT MALFUNCTIONING ITEM

Check the following.

- The A/T assembly harness connector pin terminals for damage or loose connection with harness connector.

OK or NG

OK >> Replace the control valve with TCM. Refer to AT-228, "Control Valve With TCM and A/T Fluid Temperature Sensor 2" .

NG >> Repair or replace damaged parts.

DTC P1731 A/T 1ST ENGINE BRAKING

PFP:00000

Description

ECS00CPU

Fail-safe function to prevent sudden decrease in speed by engine brake other than at “1” position.

CONSULT-II Reference Value

ECS00CPV

Item name	Condition	Display value
ON OFF SOL	Low coast brake engaged. Refer to AT-22 .	ON
	Low coast brake disengaged. Refer to AT-22 .	OFF
ATF PRES SW 2	Low coast brake engaged. Refer to AT-22 .	ON
	Low coast brake disengaged. Refer to AT-22 .	OFF

On Board Diagnosis Logic

ECS00CPW

- This is not an OBD-II self-diagnostic item.
- Diagnostic trouble code “P1731 A/T 1ST E/BRAKING” with CONSULT-II or 13th judgement flicker without CONSULT-II is detected under the following conditions.
  - When TCM does not receive the proper voltage signal from the sensor.
  - When TCM monitors each ATF pressure switch and solenoid monitor value, and detects as irregular when engine brake of 1st gear acts other than at “1” position.

Possible Cause

ECS00CPX

- Harness or connectors
  (The sensor circuit is open or shorted.)
- Low coast brake solenoid valve
- ATF pressure switch 2

DTC Confirmation Procedure

ECS00CPY

NOTE:
If “DTC Confirmation Procedure” has been previously preformed, always turn ignition switch “OFF” and wait at least 10 seconds before performing the next test.
After the repair, perform the following procedure to confirm the malfunction is eliminated.

WITH CONSULT-II

1. Turn ignition switch “ON”. (Do not start engine.)
2. Select “DATA MONITOR” mode for “A/T” with CONSULT-II.
3. Start engine.
4. Drive vehicle and maintain the following conditions for at least 2 consecutive seconds.
   ENGINE SPEED: 1,200 rpm
   Selector lever: “1” position
   Gear position: 1st gear
5. If DTC is detected, go to AT-139, "Diagnostic Procedure" .

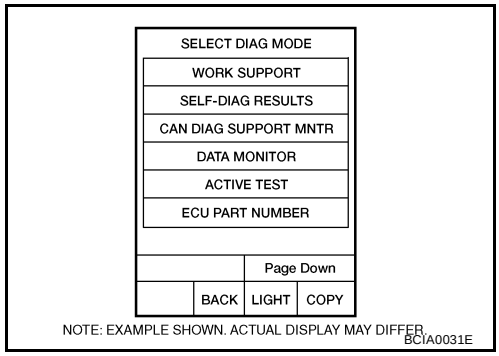

Diagnostic Procedure

ECS00CPZ

1. CHECK INPUT SIGNALS

With CONSULT-II

1. Start the engine.
2. Select “SELECTION FROM MENU” in “DATA MONITOR” mode for “A/T” with CONSULT-II.
3. Drive vehicle in the “1” position (1st gear), and confirm the ON/OFF actuation of “ATF PRES SW 2” and “ON OFF SOL”.

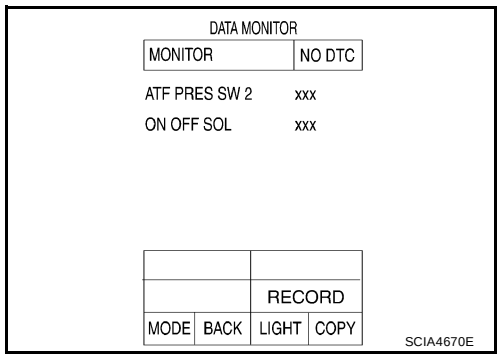

OK or NG

OK >> GO TO 4.
NG >> GO TO 2.

2. CHECK TCM POWER SUPPLY AND GROUND CIRCUIT

Check TCM power supply and ground circuit. Refer to AT-168, "MAIN POWER SUPPLY AND GROUND CIRCUIT" .

OK or NG

OK >> GO TO 3.
NG >> Repair or replace damaged parts.

3. DETECT MALFUNCTIONING ITEM

Check the following.

- The A/T assembly harness connector pin terminals for damage or loose connection with harness connector.

OK or NG

OK >> Replace the control valve with TCM. Refer to AT-228, "Control Valve With TCM and A/T Fluid Temperature Sensor 2" .
NG >> Repair or replace damaged parts.

4. CHECK DTC

Perform “DTC Confirmation Procedure”.

- Refer to AT-138, "DTC Confirmation Procedure" .

OK or NG

OK >> **INSPECTION END**
NG >> GO TO 2.

DTC P1752 INPUT CLUTCH SOLENOID VALVE

PFP:31940

Description

ECS00CQ0

Input clutch solenoid valve is controlled by the TCM in response to signals sent from the PNP switch, vehicle speed sensor and accelerator pedal position sensor (throttle position sensor). Gears will then be shifted to the optimum position.

CONSULT-II Reference Value

ECS00CQ1

Item name	Condition	Display value (Approx.)
I/C SOLENOID	Input clutch disengaged. Refer to AT-22 .	0.6 - 0.8 A
	Input clutch engaged. Refer to AT-22 .	0 - 0.05 A

On Board Diagnosis Logic

ECS00CQ2

- This is an OBD-II self-diagnostic item.
- Diagnostic trouble code “P1752 I/C SOLENOID/CIRC” with CONSULT-II or 5th judgement flicker without CONSULT-II is detected under the following conditions.
  - When TCM detects an improper voltage drop when it tries to operate the solenoid valve.
  - When TCM detects as irregular by comparing target value with monitor value.

Possible Cause

ECS00CQ3

- Harness or connectors
  (The solenoid circuit is open or shorted.)
- Input clutch solenoid valve

DTC Confirmation Procedure

ECS00CQ4

CAUTION:
Always drive vehicle at a safe speed.

NOTE:
If “DTC Confirmation Procedure” has been previously performed, always turn ignition switch “OFF” and wait at least 10 seconds before performing the next test.
After the repair, perform the following procedure to confirm the malfunction is eliminated.

WITH CONSULT-II

1. Turn ignition switch “ON”. (Do not start engine.)
2. Select “DATA MONITOR” mode for “A/T” with CONSULT-II.
3. Start engine.
4. Drive vehicle and maintain the following conditions for at least 5 consecutive seconds.
   ACCELE POS: 1.5/8 - 2.0/8
   Selector lever: “D” position
   Gear position: 3rd ⇒ 4th Gear (I/C ON/OFF)
   Driving location: Driving the vehicle uphill (increased engine load) will help maintain the driving conditions required for this test.

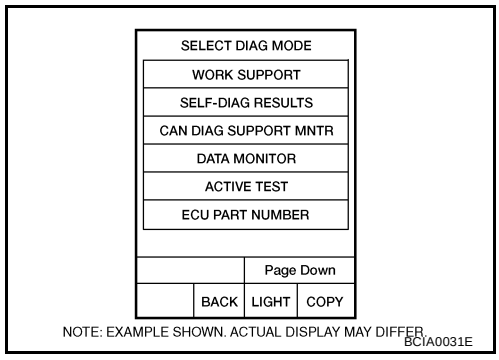

5. If DTC is detected go to AT-141, "Diagnostic Procedure" .

WITH GST

Follow the procedure “WITH CONSULT-II”.

Diagnostic Procedure

ECS00CQ5

1. CHECK INPUT SIGNAL

With CONSULT-II

1. Turn ignition switch ON.
2. Select “MAIN SIGNALS” in “DATA MONITOR” mode for “A/T” with CONSULT-II.
3. Start the engine.
4. Read out the value of “I/C SOLENOID” while driving.

OK or NG

OK >> GO TO 4.
NG >> GO TO 2.

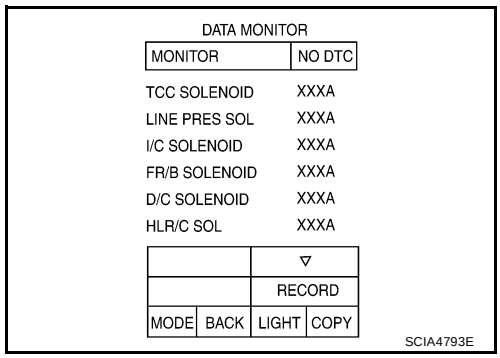

2. CHECK TCM POWER SUPPLY AND GROUND CIRCUIT

Check TCM power supply and ground circuit. Refer to AT-168, "MAIN POWER SUPPLY AND GROUND CIRCUIT" .

OK or NG

OK >> GO TO 3.
NG >> Repair or replace damaged parts.

3. DETECT MALFUNCTIONING ITEM

Check the following.

- The A/T assembly harness connector pin terminals for damage or loose connection with harness connector.

OK or NG

OK >> Replace the control valve with TCM. Refer to AT-168, "MAIN POWER SUPPLY AND GROUND CIRCUIT" .
NG >> Repair or replace damaged parts.

4. CHECK DTC

Perform “DTC Confirmation Procedure”.

- Refer to AT-140, "DTC Confirmation Procedure" .

OK or NG

OK >> **INSPECTION END**
NG >> GO TO 2.

DTC P1754 INPUT CLUTCH SOLENOID VALVE FUNCTION

PFP:31940

Description

ECS00CQ6

- Input clutch solenoid valve is controlled by the TCM in response to signals sent from the PNP switch, vehicle speed sensor and accelerator pedal position sensor (throttle position sensor). Gears will then be shifted to the optimum position.
- This is not only caused by electrical malfunction (circuits open or shorted) but also by mechanical malfunction such as control valve sticking, improper solenoid valve operation.

CONSULT-II Reference Value

ECS00CQ7

Item name	Condition	Display value (Approx.)
I/C SOLENOID	Input clutch disengaged. Refer to AT-22 .	0.6 - 0.8 A
	Input clutch engaged. Refer to AT-22 .	0 - 0.05 A
ATF PRES SW 3	Input clutch engaged. Refer to AT-22 .	ON
	Input clutch disengaged. Refer to AT-22 .	OFF

On Board Diagnosis Logic

ECS00CQ8

- This is an OBD-II self-diagnostic item.
- Diagnostic trouble code “P1754 I/C SOLENOID FNCTN” with CONSULT-II is detected under the following conditions.
  - When TCM detects that actual gear ratio is irregular, and relation between gear position and condition of pressure switch 3 is irregular during depressing accelerator pedal. (Other than during shift change)
  - When TCM detects that relation between gear position and condition of ATF pressure switch 3 is irregular during releasing accelerator pedal. (Other than during shift change)

Possible Cause

ECS00CQ9

- Harness or connectors
  (The solenoid and switch circuits are open or shorted.)
- Input clutch solenoid valve
- ATF pressure switch 3

DTC Confirmation Procedure

ECS00CQA

CAUTION:
Always drive vehicle at a safe speed.

NOTE:
If “DTC Confirmation Procedure” has been previously performed, always turn ignition switch “OFF” and wait at least 10 seconds before performing the next test.
After the repair, perform the following procedure to confirm the malfunction is eliminated.

WITH CONSULT-II

1. Start engine.
2. Accelerate vehicle to maintain the following conditions.
   ACCELE POSI: 1.5/8 - 2.0/8
   Selector lever: “D” position
   Gear position: 3rd ⇒ 4th Gear (I/C ON/OFF)
   Driving location: Driving the vehicle uphill (increased engine load) will help maintain the driving conditions required for this test.
3. Perform step “2” again.
4. Turn ignition switch “OFF”, then perform step “1” to “3” again.
5. Check “SELF-DIAG RESULTS” mode for “A/T” with CONSULT-II. If DTC (P1754) is detected, refer to AT-143, "Diagnostic Procedure" .
   If DTC (P1752) is detected, go to AT-141, "Diagnostic Procedure" .
   If DTC (P1843) is detected, go to AT-163, "Diagnostic Procedure" .

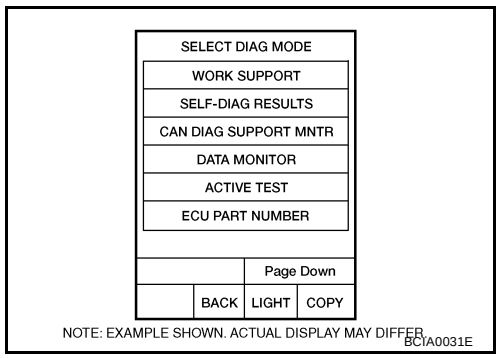

WITH GST

Follow the procedure “WITH CONSULT-II”.

Diagnostic Procedure

ECS00CQB

1. CHECK INPUT SIGNALS

With CONSULT-II

1. Start engine.
2. Select “SELECTION FROM MENU” in “DATA MONITOR” mode for “A/T” with CONSULT-II.
3. Drive vehicle in “D” position (3rd ⇒ 4th gear), and confirm the ON/OFF actuation of “ATF PRES SW 3” and electrical current value of “I/C SOLENOID”.

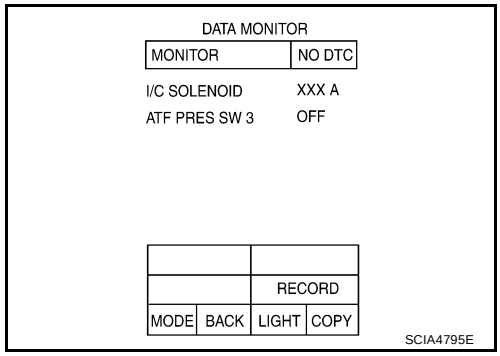

OK or NG

OK >> GO TO 4.
NG >> GO TO 2.

2. CHECK TCM POWER SUPPLY AND GROUND CIRCUIT

Check TCM power supply and ground circuit. Refer to AT-168, "MAIN POWER SUPPLY AND GROUND CIRCUIT" .

OK or NG

OK >> GO TO 3.
NG >> Repair or replace damaged parts.

3. DETECT MALFUNCTIONING ITEM

Check the following.

- The A/T assembly harness connector pin terminals for damage or loose connection with harness connector.

OK or NG

OK >> Replace the control valve with TCM. Refer to AT-228, "Control Valve With TCM and A/T Fluid Temperature Sensor 2" .
NG >> Repair or replace damaged parts.

4. CHECK DTC

Perform “DTC Confirmation Procedure”.

- Refer to AT-142, "DTC Confirmation Procedure" .

OK or NG

OK >> **INSPECTION END**
NG >> GO TO 2.

DTC P1757 FRONT BRAKE SOLENOID VALVE

PFP:31940

Description

ECS00CQC

Front brake solenoid valve is controlled by the TCM in response to signals sent from the PNP switch, vehicle speed sensor and accelerator pedal position sensor (throttle position sensor). Gears will then be shifted to the optimum position.

CONSULT-II Reference Value

ECS00CQD

Item name	Condition	Display value (Approx.)
FR/B SOLENOID	Front brake engaged. Refer to AT-22 .	0.6 - 0.8 A
	Front brake disengaged. Refer to AT-22 .	0 - 0.05 A

On Board Diagnosis Logic

ECS00CQE

- This is an OBD-II self-diagnostic item.
- Diagnostic trouble code “P1757 FR/B SOLENOID/CIRC” with CONSULT-II or 6th judgement flicker without CONSULT-II is detected under the following conditions.
  - When TCM detects an improper voltage drop when it tries to operate the solenoid valve.
  - When TCM detects as irregular by comparing target value with monitor value.

Possible Cause

ECS00CQF

- Harness or connectors
  (The solenoid circuit is open or shorted.)
- Front brake solenoid valve

DTC Confirmation Procedure

ECS00CQG

CAUTION:
Always drive vehicle at a safe speed.

NOTE:
If “DTC Confirmation Procedure” has been previously performed, always turn ignition switch “OFF” and wait at least 10 seconds before performing the next test.
After the repair, perform the following procedure to confirm the malfunction is eliminated.

WITH CONSULT-II

1. Turn ignition switch “ON”. (Do not start engine.)
2. Select “DATA MONITOR” mode for “A/T” with CONSULT-II.
3. Start engine.
4. Drive vehicle and maintain the following conditions for at least 5 consecutive seconds.
   ACCELE POS: 1.5/8 - 2.0/8
   Selector lever: “D” position
   Gear position: 3rd ⇒ 4th Gear (FR/B ON/OFF)
   Driving location: Driving the vehicle uphill (increased engine load) will help maintain the driving conditions required for this test.

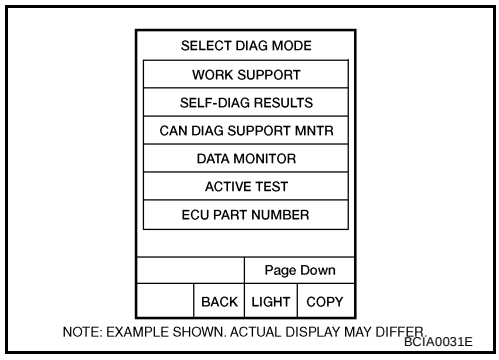

5. If DTC is detected go to AT-145, "Diagnostic Procedure" .

WITH GST

Follow the procedure “WITH CONSULT-II”.

Diagnostic Procedure

ECS00CQH

1. CHECK INPUT SIGNAL

With CONSULT-II

1. Turn ignition switch ON.
2. Select “MAIN SIGNALS” in “DATA MONITOR” mode for “A/T” with CONSULT-II.
3. Start engine.
4. Read out the value of “FR/B SOLENOID” while driving.

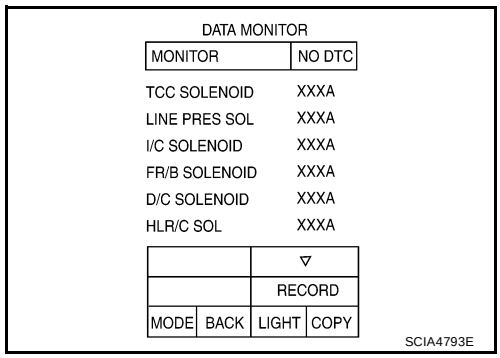

OK or NG

OK >> GO TO 4.
NG >> GO TO 2.

2. CHECK TCM POWER SUPPLY AND GROUND CIRCUIT

Check TCM power supply and ground circuit. Refer to AT-168, "MAIN POWER SUPPLY AND GROUND CIRCUIT" .

OK or NG

OK >> GO TO 3.
NG >> Repair or replace damaged parts.

3. DETECT MALFUNCTIONING ITEM

Check the following.

- The A/T assembly harness connector pin terminals for damage or loose connection with harness connector.

OK or NG

OK >> Replace the control valve with TCM. Refer to AT-228, "Control Valve With TCM and A/T Fluid Temperature Sensor 2" .
NG >> Repair or replace damaged parts.

4. CHECK DTC

Perform “DTC Confirmation Procedure”.

- Refer to AT-144, "DTC Confirmation Procedure" .

OK or NG

OK >> **INSPECTION END**
NG >> GO TO 2.

DTC P1759 FRONT BRAKE SOLENOID VALVE FUNCTION

PFP:31940

Description

ECS00CQI

- Front brake solenoid valve is controlled by the TCM in response to signals sent from the PNP switch, vehicle speed sensor and accelerator pedal position sensor (throttle position sensor). Gears will then be shifted to the optimum position.
- This is not only caused by electrical malfunction (circuits open or shorted) but also by mechanical malfunction such as control valve sticking, improper solenoid valve operation.

CONSULT-II Reference Value

ECS00CQJ

Item name	Condition	Display value (Approx.)
FR/B SOLENOID	Front brake engaged. Refer to AT-22 .	0.6 - 0.8 A
	Front brake disengaged. Refer to AT-22 .	0 - 0.05 A
ATF PRES SW 1	Front brake engaged. Refer to AT-22 .	ON
	Front brake disengaged. Refer to AT-22 .	OFF

On Board Diagnosis Logic

ECS00CQK

- This is an OBD-II self-diagnostic item.
- Diagnostic trouble code “P1759 FR/B SOLENOID FNCT” with CONSULT-II is detected under the following conditions.
  - When TCM detects that actual gear ratio is irregular, and relation between gear position and condition of ATF pressure switch 1 is irregular during depressing accelerator pedal. (Other than during shift change)
  - When TCM detects that relation between gear position and condition of ATF pressure switch 1 is irregular during releasing accelerator pedal. (Other than during shift change)

Possible Cause

ECS00CQL

- Harness or connectors
  (The solenoid and switch circuits are open or shorted.)
- Front brake solenoid valve
- ATF pressure switch 1

DTC Confirmation Procedure

ECS00CQM

CAUTION:
Always drive vehicle at a safe speed.

NOTE:
If “DTC Confirmation Procedure” has been previously performed, always turn ignition switch “OFF” and wait at least 10 seconds before performing the next test.
After the repair, perform the following procedure to confirm the malfunction is eliminated.

WITH CONSULT-II

1. Start engine.
2. Accelerate vehicle to maintain the following conditions.
   ACCELE POS: 1.5/8 - 2.0/8
   Selector lever: “D” position
   Gear position: 3rd ⇒ 4th Gear (FR/B ON/OFF)
   Driving location: Driving the vehicle uphill (increased engine load) will help maintain the driving conditions required for this test.
3. Perform step “2” again.
4. Turn ignition switch “OFF”, then perform step “1” to “3” again.
5. Check “SELF-DIAG RESULTS” mode for “A/T” with CONSULT-II. If DTC (P1759) is detected, refer to AT-147, "Diagnostic Procedure" .
   If DTC (P1757) is detected, go to AT-145, "Diagnostic Procedure" .
   If DTC (P1841) is detected, go to AT-161, "Diagnostic Procedure" .

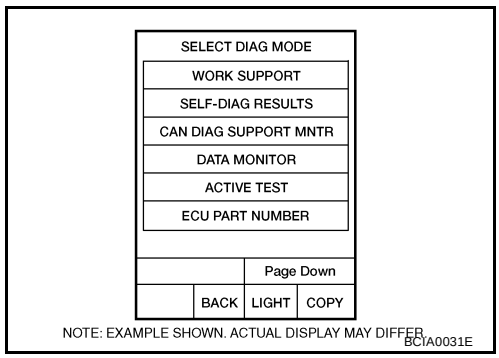

WITH GST

Follow the procedure “WITH CONSULT-II”.

Diagnostic Procedure

ECS00CQN

1. CHECK INPUT SIGNALS

With CONSULT-II

1. Start engine.
2. Select “SELECTION FROM MENU” in “DATA MONITOR” mode for “A/T” with CONSULT-II.
3. Drive vehicle in the “D” position (3rd ⇒ 4th gear), and confirm the ON/OFF actuation of the “ATF PRES SW 1” and electrical current value of “FR/B SOLENOID”.

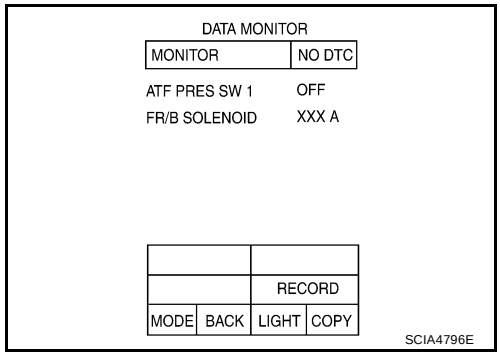

OK or NG

OK >> GO TO 4.
NG >> GO TO 2.

2. CHECK TCM POWER SUPPLY AND GROUND CIRCUIT

Check TCM power supply and ground circuit. Refer to AT-168, "MAIN POWER SUPPLY AND GROUND CIRCUIT" .

OK or NG

OK >> GO TO 3.
NG >> Repair or replace damaged parts.

3. DETECT MALFUNCTIONING ITEM

Check the following.

- The A/T assembly harness connector pin terminals for damage or loose connection with harness connector.

OK or NG

OK >> Replace the control valve with TCM. Refer to AT-228, "Control Valve With TCM and A/T Fluid Temperature Sensor 2" .
NG >> Repair or replace damaged parts.

4. CHECK DTC

Perform “DTC Confirmation Procedure”.

- Refer to AT-146, "DTC Confirmation Procedure" .

OK or NG

OK >> **INSPECTION END**
NG >> GO TO 2.

DTC P1762 DIRECT CLUTCH SOLENOID VALVE

PFP:31940

Description

ECS00CQO

Direct clutch solenoid valve is controlled by the TCM in response to signals sent from the PNP switch, vehicle speed sensor and accelerator pedal position sensor (throttle position sensor). Gears will then be shifted to the optimum position.

CONSULT-II Reference Value

ECS00CQP

Item name	Condition	Display value (Approx.)
D/C SOLENOID	Direct clutch disengaged. Refer to AT-22 .	0.6 - 0.8 A
	Direct clutch engaged. Refer to AT-22 .	0 - 0.05 A

On Board Diagnosis Logic

ECS00CQQ

- This is an OBD-II self-diagnostic item.
- Diagnostic trouble code “P1762 D/C SOLENOID/CIRC” with CONSULT-II or 2nd judgement flicker without CONSULT-II is detected under the following conditions.
  - When TCM detects an improper voltage drop when it tries to operate the solenoid valve.
  - When TCM detects as irregular by comparing target value with monitor value.

Possible Cause

ECS00CQR

- Harness or connectors
  (The solenoid circuit is open or shorted.)
- Direct clutch solenoid valve

DTC Confirmation Procedure

ECS00CQS

NOTE:
If “DTC Confirmation Procedure” has been previously performed, always turn ignition switch “OFF” and wait at least 10 seconds before performing the next test.
After the repair, perform the following procedure to confirm the malfunction is eliminated.

WITH CONSULT-II

1. Turn ignition switch “ON”. (Do not start engine.)
2. Select “DATA MONITOR” mode for “A/T” with CONSULT-II.
3. Start engine.
4. Drive vehicle and maintain the following conditions for at least 5 consecutive seconds.
   ACCELE POS: 1.5/8 - 2.0/8
   Selector lever: “D” position
   Gear position: 1st ⇒ 2nd Gear (D/C ON/OFF)
   Driving location: Driving the vehicle uphill (increased engine load) will help maintain the driving conditions required for this test.
5. If DTC is detected, go to AT-149, "Diagnostic Procedure" .

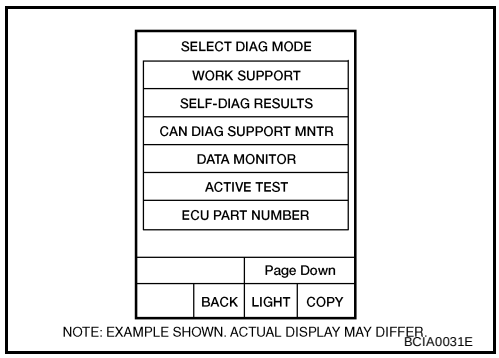

WITH GST

Follow the procedure “WITH CONSULT-II”.

Diagnostic Procedure

ECS00CQT

1. CHECK INPUT SIGNAL

With CONSULT-II

1. Turn ignition switch ON.
2. Select “MAIN SIGNALS” in “DATA MONITOR” mode for “A/T” with CONSULT-II.
3. Start the engine.
4. Read out the value of “D/C SOLENOID” while driving.

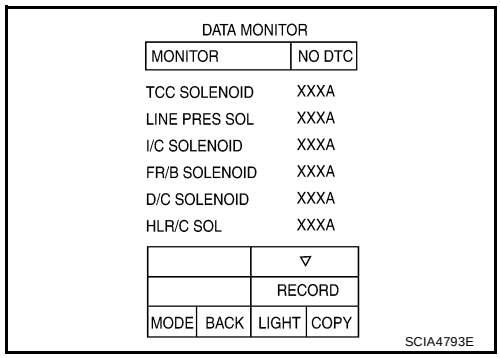

OK or NG

OK >> GO TO 4.
NG >> GO TO 2.

2. CHECK TCM POWER SUPPLY AND GROUND CIRCUIT

Check TCM power supply and ground circuit. Refer to AT-168, "MAIN POWER SUPPLY AND GROUND CIRCUIT" .

OK or NG

OK >> GO TO 3.
NG >> Repair or replace damaged parts.

3. DETECT MALFUNCTIONING ITEM

Check the following.

- The A/T assembly harness connector pin terminals for damage or loose connection with harness connector.

OK or NG

OK >> Replace the control valve with TCM. Refer to AT-228, "Control Valve With TCM and A/T Fluid Temperature Sensor 2" .
NG >> Repair or replace damaged parts.

4. CHECK DTC

Perform “DTC Confirmation Procedure”.

- Refer to AT-148, "DTC Confirmation Procedure" .

OK or NG

OK >> **INSPECTION END**
NG >> GO TO 2.

DTC P1764 DIRECT CLUTCH SOLENOID VALVE FUNCTION

PFP:31940

Description

ECS00CQU

- Direct clutch solenoid valve is controlled by the TCM in response to signals sent from the PNP switch, vehicle speed sensor and accelerator pedal position sensor (throttle position sensor). Gears will then be shifted to the optimum position.
- This is not only caused by electrical malfunction (circuits open or shorted) but also by mechanical malfunction such as control valve sticking, improper solenoid valve operation.

CONSULT-II Reference Value

ECS00CQV

Item name	Condition	Display value (Approx.)
D/C SOLENOID	Direct clutch disengaged. Refer to AT-22 .	0.6 - 0.8 A
	Direct clutch engaged. Refer to AT-22 .	0 - 0.05 A
ATF PRES SW 5	Direct clutch engaged. Refer to AT-22 .	ON
	Direct clutch disengaged. Refer to AT-22 .	OFF

On Board Diagnosis Logic

ECS00CQW

- This is an OBD-II self-diagnostic item.
- Diagnostic trouble code “P1764 D/C SOLENOID FNCTN” with CONSULT-II is detected under the following conditions.
  - When TCM detects that actual gear ratio is irregular, and relation between gear position and condition of ATF pressure switch 5 is irregular during depressing accelerator pedal. (Other than during shift change)
  - When TCM detects that relation between gear position and condition of ATF pressure switch 5 is irregular during releasing accelerator pedal. (Other than during shift change)

Possible Cause

ECS00CQX

- Harness or connectors
  (The solenoid and switch circuits are open or shorted.)
- Direct clutch solenoid valve
- ATF pressure switch 5

DTC Confirmation Procedure

ECS00CQY

NOTE:
If “DTC Confirmation Procedure” has been previously performed, always turn ignition switch “OFF” and wait at least 10 seconds before performing the next test.
After the repair, perform the following procedure to confirm the malfunction is eliminated.

WITH CONSULT-II

1. Start engine.
2. Accelerate vehicle to maintain the following conditions.
   ACCELE POS: 1.5/8 - 2.0/8
   Selector lever: “D” position
   Gear position: 1st ⇒ 2nd Gear (D/C ON/OFF)
   Driving location: Driving the vehicle uphill (increased engine load) will help maintain the driving conditions required for this test.
3. Perform step “2” again.
4. Turn ignition switch “OFF”, then perform step “1” to “3” again.
5. Check “SELF-DIAG RESULTS” mode for “A/T” with CONSULT-II. If DTC (P1764) is detected, refer to AT-151, "Diagnostic Procedure" .
   If DTC (P1762) is detected, go to AT-149, "Diagnostic Procedure" .
   If DTC (P1845) is detected, go to AT-165, "Diagnostic Procedure" .

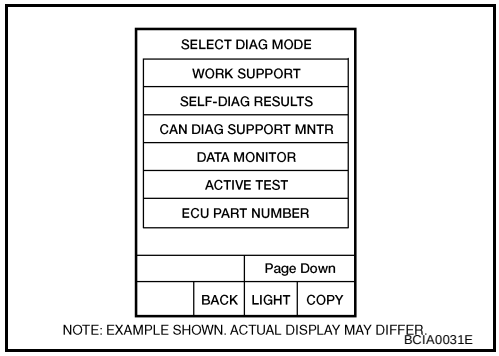

WITH GST

Follow the procedure “WITH CONSULT-II”.

Diagnostic Procedure

ECS00CQZ

1. CHECK INPUT SIGNALS

With CONSULT-II

1. Start engine.
2. Select “SELECTION FROM MENU” in “DATA MONITOR” mode for “A/T” with CONSULT-II.
3. Drive vehicle in the “D” position (1st ⇒ 2nd gear), and confirm the display actuation of the “ATF PRES SW 5” and electrical current value of “D/C SOLENOID”.

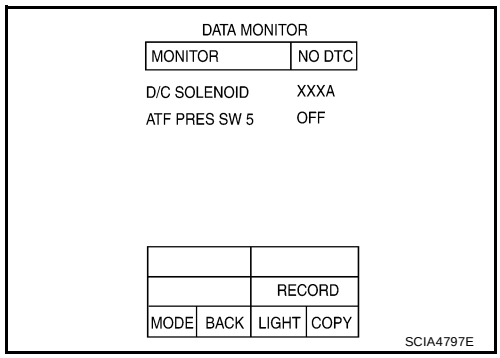

OK or NG

OK >> GO TO 4.
NG >> GO TO 2.

2. CHECK TCM POWER SUPPLY AND GROUND CIRCUIT

Check TCM power supply and ground circuit. Refer to AT-168, "MAIN POWER SUPPLY AND GROUND CIRCUIT" .

OK or NG

OK >> GO TO 3.
NG >> Repair or replace damaged parts.

3. DETECT MALFUNCTIONING ITEM

Check the following.

- The A/T assembly harness connector pin terminals for damage or loose connection with harness connector.

OK or NG

OK >> Replace the control valve with TCM. Refer to AT-228, "Control Valve With TCM and A/T Fluid Temperature Sensor 2" .
NG >> Repair or replace damaged parts.

4. CHECK DTC

Perform “DTC Confirmation Procedure”.

- Refer to AT-150, "DTC Confirmation Procedure" .

OK or NG

OK >> **INSPECTION END**
NG >> GO TO 2.

DTC P1767 HIGH AND LOW REVERSE CLUTCH SOLENOID VALVE

PFP:31940

Description

ECS00CR0

High and low reverse clutch solenoid valve is controlled by the TCM in response to signals sent from the PNP switch, vehicle speed sensor and accelerator pedal position sensor (throttle position sensor). Gears will then be shifted to the optimum position.

CONSULT-II Reference Value

ECS00CR1

Item name	Condition	Display value (Approx.)
HLR/C SOL	High and low reverse clutch disengaged. Refer to AT-22 .	0.6 - 0.8 A
	High and low reverse clutch engaged. Refer to AT-22 .	0 - 0.05 A

On Board Diagnosis Logic

ECS00CR2

- This is an OBD-II self-diagnostic item.
- Diagnostic trouble code “P1767 HLR/C SOL/CIRC” with CONSULT-II or 8th judgement flicker without CONSULT-II is detected under the following conditions.
  - When TCM detects an improper voltage drop when it tries to operate the solenoid valve.
  - When TCM detects as irregular by comparing target value with monitor value.

Possible Cause

ECS00CR3

- Harness or connectors
  (The solenoid circuit is open or shorted.)
- High and low reverse clutch solenoid valve

DTC Confirmation Procedure

ECS00CR4

CAUTION:
Always drive vehicle at a safe speed.

NOTE:
If “DTC Confirmation Procedure” has been previously performed, always turn ignition switch “OFF” and wait at least 10 seconds before performing the next test.
After the repair, perform the following procedure to confirm the malfunction is eliminated.

WITH CONSULT-II

1. Turn ignition switch “ON”. (Do not start engine.)
2. Select “DATA MONITOR” mode for “A/T” with CONSULT-II.
3. Start engine.
4. Drive vehicle and maintain the following conditions for at least 5 consecutive seconds.
   ACCELE POS: 1.5/8 - 2.0/8
   Selector lever: “D” position
   Gear position: 2nd ⇒ 3rd Gear (HLR/C ON/OFF)
   Driving location: Driving the vehicle uphill (increased engine load) will help maintain the driving conditions required for this test.

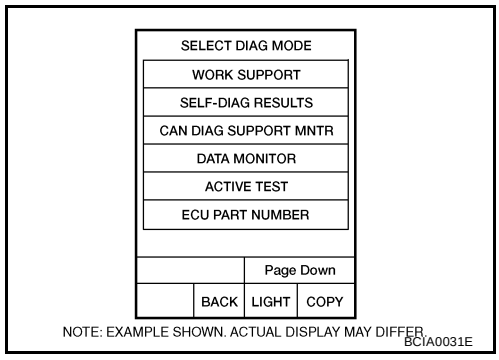

5. If DTC is detected, go to AT-153, "Diagnostic Procedure" .

WITH GST

Follow the procedure “WITH CONSULT-II”.

Diagnostic Procedure

ECS00CR5

1. CHECK INPUT SIGNAL

With CONSULT-II

1. Turn ignition switch ON.
2. Select “MAIN SIGNALS” in “DATA MONITOR” mode for “A/T” with CONSULT-II.
3. Start the engine.
4. Read out the value of “HLR/C SOLENOID” while driving.

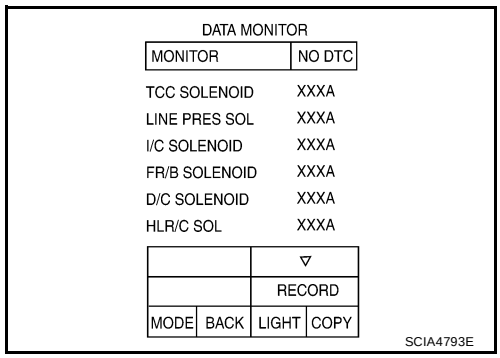

OK or NG

OK >> GO TO 4.
NG >> GO TO 2.

2. CHECK TCM POWER SUPPLY AND GROUND CIRCUIT

Check TCM power supply and ground circuit. Refer to AT-168, "MAIN POWER SUPPLY AND GROUND CIRCUIT" .

OK or NG

OK >> GO TO 3.
NG >> Repair or replace damaged parts.

3. DETECT MALFUNCTIONING ITEM

Check the following.

- The A/T assembly harness connector pin terminals for damage or loose connection with harness connector.

OK or NG

OK >> Replace the control valve with TCM. Refer to AT-228, "Control Valve With TCM and A/T Fluid Temperature Sensor 2" .
NG >> Repair or replace damaged parts.

4. CHECK DTC

Perform “DTC Confirmation Procedure”.

- Refer to AT-152, "DTC Confirmation Procedure" .

OK or NG

OK >> **INSPECTION END**
NG >> GO TO 2.

DTC P1769 HIGH AND LOW REVERSE CLUTCH SOLENOID VALVE FUNCTION

PFP:31940

Description

ECS00CR6

- High and low reverse clutch solenoid valve is controlled by the TCM in response to signals sent from the PNP switch, vehicle speed sensor and accelerator pedal position sensor (throttle position sensor). Gears will then be shifted to the optimum position.
- This is not only caused by electrical malfunction (circuits open or shorted) but also by mechanical malfunction such as control valve sticking, improper solenoid valve operation.

CONSULT-II Reference Value

ECS00CR7

Item name	Condition	Display value (Approx.)
HLR/C SOL	High and low reverse clutch disengaged. Refer to AT-22 .	0.6 - 0.8 A
	High and low reverse clutch engaged. Refer to AT-22 .	0 - 0.05 A
ATF PRES SW 6	High and low reverse clutch engaged. Refer to AT-22 .	ON
	High and low reverse clutch disengaged. Refer to AT-22 .	OFF

On Board Diagnosis Logic

ECS00CR8

- This is an OBD-II self-diagnostic item.
- Diagnostic trouble code “P1769 HLR/C SOL FNCTN” with CONSULT-II is detected under the following conditions.
  - When TCM detects that actual gear ratio is irregular, and relation between gear position and condition of ATF pressure switch 6 is irregular during depressing accelerator pedal. (Other than during shift change)
  - When TCM detects that relation between gear position and condition of ATF pressure switch 6 is irregular during releasing accelerator pedal. (Other than during shift change)

Possible Cause

ECS00CR9

- Harness or connectors
  (The solenoid and switch circuits are open or shorted.)
- High and low reverse clutch solenoid valve
- ATF pressure switch 6

DTC Confirmation Procedure

ECS00CRA

CAUTION:
Always drive vehicle at a safe speed.

NOTE:
If “DTC Confirmation Procedure” has been previously performed, always turn ignition switch “OFF” and wait at least 10 seconds before performing the next test.
After the repair, perform the following procedure to confirm the malfunction is eliminated.

WITH CONSULT-II

1. Start engine.
2. Accelerate vehicle to maintain the following conditions.
   ACCELE POS: 1.5/8 - 2.0/8
   Selector lever: “D” position
   Gear position: 2nd ⇒ 3rd Gear (HLR/C ON/OFF)
   Driving location: Driving the vehicle uphill (increased engine load) will help maintain the driving conditions required for this test.
3. Perform step “2” again.
4. Turn ignition switch “OFF”, then perform step “1” to “3” again.
5. Check “SELF-DIAG RESULTS” mode for “A/T” with CONSULT-II. If DTC (P1769) is detected, refer to AT-155, "Diagnostic Procedure" .
   If DTC (P1767) is detected, go to AT-153, "Diagnostic Procedure" .
   If DTC (P1846) is detected, go to AT-167, "Diagnostic Procedure" .

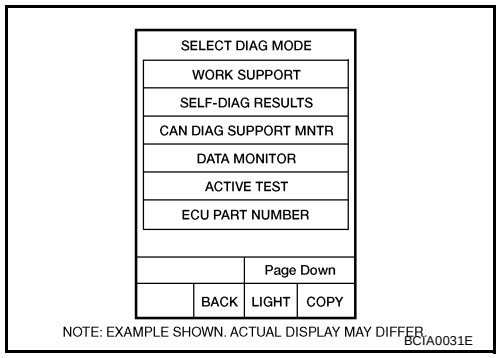

WITH GST

Follow the procedure “WITH CONSULT-II”.

Diagnostic Procedure

ECS00CRB

1. CHECK INPUT SIGNALS

With CONSULT-II

1. Start the engine.
2. Select “SELECTION FROM MENU” in “DATA MONITOR” mode for “A/T” with CONSULT-II.
3. Drive vehicle in the “D” position (2nd ⇒ 3rd gear), and confirm the ON/OFF actuation of the “ATF PRES SW 6” and electrical current value of “HLR/C SOL”.

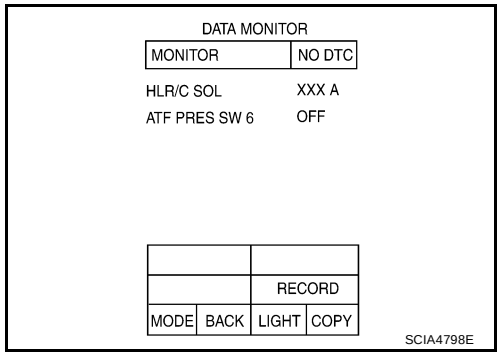

OK or NG

OK >> GO TO 4.
NG >> GO TO 2.

2. CHECK TCM POWER SUPPLY AND GROUND CIRCUIT

Check TCM power supply and ground circuit. Refer to AT-168, "MAIN POWER SUPPLY AND GROUND CIRCUIT" .

OK or NG

OK >> GO TO 3.
NG >> Repair or replace damaged parts.

3. DETECT MALFUNCTIONING ITEM

Check the following.

- The A/T assembly harness connector pin terminals for damage or loose connection with harness connector.

OK or NG

OK >> Replace the control valve with TCM. Refer to AT-228, "Control Valve With TCM and A/T Fluid Temperature Sensor 2" .
NG >> Repair or replace damaged parts.

4. CHECK DTC

Perform “DTC Confirmation Procedure”.

- Refer to AT-154, "DTC Confirmation Procedure" .

OK or NG

OK >> **INSPECTION END**
NG >> GO TO 2.

DTC P1772 LOW COAST BRAKE SOLENOID VALVE

PFP:31940

Description

ECS00CRC

Low coast brake solenoid valve is turned “ON” or “OFF” by the TCM in response to signals sent from the PNP switch, vehicle speed sensor and accelerator pedal position sensor (throttle position sensor). Gears will then be shifted to the optimum position.

CONSULT-II Reference Value

ECS00CRD

Item name	Condition	Display value
ON OFF SOL	Low coast brake engaged. Refer to AT-22 .	ON
	Low coast brake disengaged. Refer to AT-22 .	OFF

On Board Diagnosis Logic

ECS00CRE

- This is an OBD-II self-diagnostic item.
- Diagnostic trouble code “P1772 LC/B SOLENOID/CIRC” with CONSULT-II or 7th judgement flicker without CONSULT-II is detected when TCM detects an improper voltage drop when it tries to operate the solenoid valve.

Possible Cause

ECS00CRF

- Harness or connectors
  (The solenoid circuit is open or shorted.)
- Low coast brake solenoid valve

DTC Confirmation Procedure

ECS00CRG

NOTE:
If “DTC Confirmation Procedure” has been previously performed, always turn ignition switch “OFF” and wait at least 10 seconds before performing the next test.
After the repair, perform the following procedure to confirm the malfunction is eliminated.

WITH CONSULT-II

1. Turn ignition switch “ON”. (Do not start engine.)
2. Select “DATA MONITOR” mode for “ENGINE” with CONSULT-II.
3. Start engine.
4. Drive vehicle and maintain the following conditions for at least 5 consecutive seconds.
   Selector lever: “1” or “2”
   Gear position: “1st” or “2nd” gear (LC/B ON/OFF)
5. If DTC is detected, go to AT-157, "Diagnostic Procedure" .

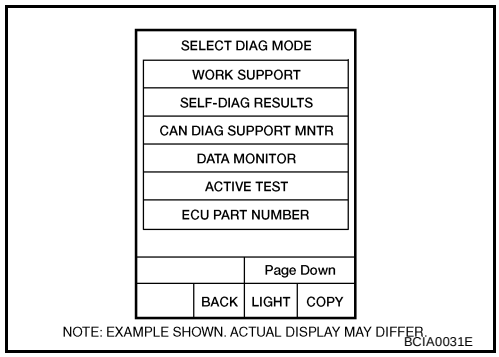

WITH GST

Follow the procedure “WITH CONSULT-II”.

Diagnostic Procedure

ECS00CRH

1. CHECK INPUT SIGNAL

With CONSULT-II

1. Turn ignition switch ON.
2. Select “SELECTION FROM MENU” in “DATA MONITOR” mode for “A/T” with CONSULT-II.
3. Start the engine.
4. Read out the value of “ON OFF SOL” while driving.

OK or NG

OK >> GO TO 4.
NG >> GO TO 2.

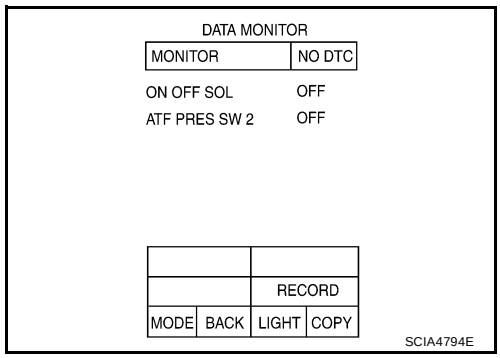

2. CHECK TCM POWER SUPPLY AND GROUND CIRCUIT

Check TCM power supply and ground circuit. Refer to AT-168, "MAIN POWER SUPPLY AND GROUND CIRCUIT" .

OK or NG

OK >> GO TO 3.
NG >> Repair or replace damaged parts.

3. DETECT MALFUNCTIONING ITEM

Check the following.

- The A/T assembly harness connector pin terminals for damage or loose connection with harness connector.

OK or NG

OK >> Replace the control valve with TCM. Refer to AT-228, "Control Valve With TCM and A/T Fluid Temperature Sensor 2" .
NG >> Repair or replace damaged parts.

4. CHECK DTC

Perform “DTC Confirmation Procedure”.

- Refer to AT-156, "DTC Confirmation Procedure" .

OK or NG

OK >> **INSPECTION END**
NG >> GO TO 2.

DTC P1774 LOW COAST BRAKE SOLENOID VALVE FUNCTION

PFP:31940

Description

ECS00CRI

- Low coast brake solenoid valve is turned “ON” or “OFF” by the TCM in response to signals sent from the PNP switch, vehicle speed sensor and accelerator pedal position sensor (throttle position sensor). Gears will then be shifted to the optimum position.
- This is not only caused by electrical malfunction (circuits open or shorted) but also by mechanical malfunction such as control valve sticking, improper solenoid valve operation.

CONSULT-II Reference Value

ECS00CRJ

Item name	Condition	Display value
ON OFF SOL	Low coast brake engaged. Refer to AT-22 .	ON
	Low coast brake disengaged. Refer to AT-22 .	OFF
ATF PRES SW 2	Low coast brake engaged. Refer to AT-22 .	ON
	Low coast brake disengaged. Refer to AT-22 .	OFF

On Board Diagnosis Logic

ECS00CRK

- This is an OBD-II self-diagnostic item.
- Diagnostic trouble code “P1774 LC/B SOLENOID FNCT” with CONSULT-II is detected under the following conditions.
  - When TCM detects that actual gear ratio is irregular, and relation between gear position and condition of ATF pressure switch 2 is irregular during depressing accelerator pedal. (Other than during shift change)
  - When TCM detects that relation between gear position and condition of ATF pressure switch 2 is irregular during releasing accelerator pedal. (Other than during shift change)

Possible Cause

ECS00CRL

- Harness or connectors
  (The solenoid and switch circuits are open or shorted.)
- Low coast brake solenoid valve
- ATF pressure switch 2

DTC Confirmation Procedure

ECS00CRM

CAUTION:
Always drive vehicle at a safe speed.

NOTE:
If “DTC Confirmation Procedure” has been previously performed, always turn ignition switch “OFF” and wait at least 10 seconds before performing the next test.
After the repair, perform the following procedure to confirm the malfunction is eliminated.

WITH CONSULT-II

1. Start engine.
2. Accelerate vehicle to maintain the following conditions.
   Selector lever: “1” or “2” position
   Gear position: “1st” or “2nd” gear (LC/B ON/OFF)
3. Perform step “2” again.
4. Turn ignition switch “OFF”, then perform step “1” to “3” again.
5. Check “SELF-DIAG RESULTS” mode for “A/T” with CONSULT-II. If DTC (P1774) is detected, refer to AT-159, "Diagnostic Procedure" .
   If DTC (P1772) is detected, go to AT-157, "Diagnostic Procedure" .

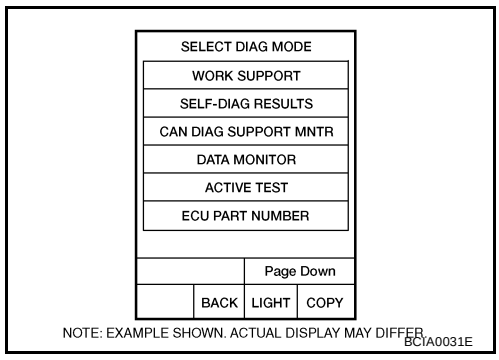

WITH GST

Follow the procedure “WITH CONSULT-II”.

Diagnostic Procedure

ECS00CRN

1. CHECK INPUT SIGNALS

With CONSULT-II

1. Start the engine.
2. Select “SELECTION FROM MENU” in “DATA MONITOR” mode for “A/T” with CONSULT-II.
3. Drive vehicle in the “1” or “2” position (1$_1$ or 2$_2$ ” gear), and confirm the ON/OFF actuation of the “ATF PRES SW 2” and “ON OFF SOL”.

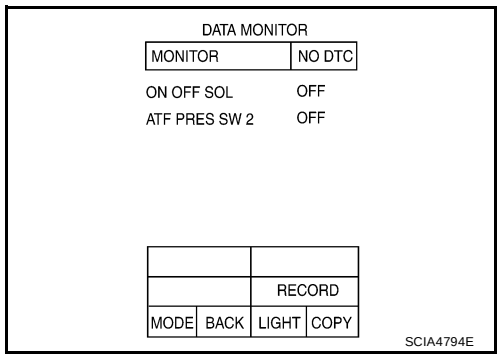

OK or NG

OK >> GO TO 4.
NG >> GO TO 2.

2. CHECK TCM POWER SUPPLY AND GROUND CIRCUIT

Check TCM power supply and ground circuit. Refer to AT-168, "MAIN POWER SUPPLY AND GROUND CIRCUIT" .

OK or NG

OK >> GO TO 3.
NG >> Repair or replace damaged parts.

3. DETECT MALFUNCTIONING ITEM

Check the following.

- The A/T assembly harness connector pin terminals for damage or loose connection with harness connector.

OK or NG

OK >> Replace the control valve with TCM. Refer to AT-228, "Control Valve With TCM and A/T Fluid Temperature Sensor 2" .
NG >> Repair or replace damaged parts.

4. CHECK DTC

Perform “DTC Confirmation Procedure”.

- Refer to AT-158, "DTC Confirmation Procedure" .

OK or NG

OK >> **INSPECTION END**
NG >> GO TO 2.

DTC P1841 ATF PRESSURE SWITCH 1

PFP:25240

Description

ECS00CRO

Fail-safe function to detect front brake clutch solenoid valve condition.

CONSULT-II Reference Value

ECS00CRP

Item name	Condition	Display value
ATF PRES SW 1	Front brake engaged. Refer to AT-22 .	ON
	Front brake disengaged. Refer to AT-22 .	OFF

On Board Diagnosis Logic

ECS00CRQ

- This is not an OBD-II self-diagnostic item.
- Diagnostic trouble code “P1841 ATF PRES SW 1/CIRC” with CONSULT-II is detected when TCM detects that actual gear ratio is normal, and relation between gear position and condition of ATF pressure switch 1 is irregular during depressing accelerator pedal. (Other than during shift change)

Possible Cause

ECS00CRR

- ATF pressure switch 1
- Harness or connectors
  (The switch circuit is open or shorted.)

DTC Confirmation Procedure

ECS00CRS

CAUTION:
Always drive vehicle at a safe speed.

NOTE:
If “DTC Confirmation Procedure” has been previously performed, always turn ignition switch “OFF” and wait at least 10 seconds before performing the next test.
After the repair, perform the following procedure to confirm the malfunction is eliminated.

WITH CONSULT-II

1. Start engine.
2. Accelerate vehicle to maintain the following conditions.
   ACCELE POS: 1.5/8 - 2.0/8
   Selector lever: “D” position
   Gear position: 3rd ⇒ 4th Gear (FR/B ON/OFF)
   Driving location: Driving the vehicle uphill (increased engine load) will help maintain the driving conditions required for this test.
3. Perform step “2” again.
4. Turn ignition switch “OFF”, then perform step “1” to “3” again.
5. Check “SELF-DIAG RESULTS” mode for “A/T” with CONSULT-II.
   If DTC (P1841) is detected, go to AT-161, "Diagnostic Procedure" .
   If DTC (P1757) is detected, go to AT-145, "Diagnostic Procedure" .

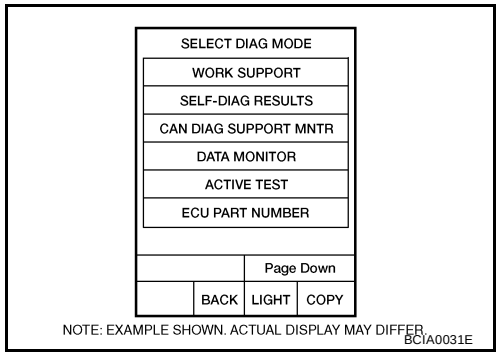

Diagnostic Procedure

ECS00CRT

1. CHECK INPUT SIGNAL

With CONSULT-II

1. Start engine.
2. Select “ECU INPUT SIGNALS” or “MAIN SIGNALS” in “DATA MONITOR” mode for “A/T” with CONSULT-II.
3. Drive vehicle in the “D” position (3rd ⇒ 4th gear), and confirm the ON/OFF actuation of the “ATF PRES SW 1”.

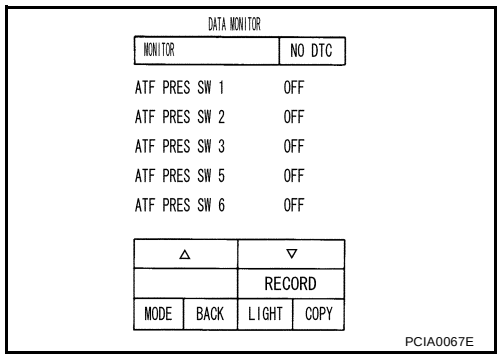

OK or NG

OK >> GO TO 4.
NG >> GO TO 2.

2. CHECK TCM POWER SUPPLY AND GROUND CIRCUIT

Check TCM power supply and ground circuit. Refer to AT-168, "MAIN POWER SUPPLY AND GROUND CIRCUIT" .

OK or NG

OK >> GO TO 3.
NG >> Repair or replace damaged parts.

3. DETECT MALFUNCTIONING ITEM

Check the following.

- The A/T assembly harness connector pin terminals for damage or loose connection with harness connector.

OK or NG

OK >> Replace the control valve with TCM. Refer to AT-228, "Control Valve With TCM and A/T Fluid Temperature Sensor 2" .
NG >> Repair or replace damaged parts.

4. CHECK DTC

Perform “DTC Confirmation Procedure”.

- Refer to AT-161, "Diagnostic Procedure" .

OK or NG

OK >> **INSPECTION END**
NG >> GO TO 2.

DTC P1843 ATF PRESSURE SWITCH 3

PFP:25240

Description

ECS00CRU

Fail-safe function to detect input clutch solenoid valve condition.

CONSULT-II Reference Value

ECS00CRV

Item name	Condition	Display value
ATF PRES SW 3	Input clutch engaged. Refer to AT-22 .	ON
	Input clutch disengaged. Refer to AT-22 .	OFF

On Board Diagnosis Logic

ECS00CRW

- This is not an OBD-II self-diagnostic item.
- Diagnostic trouble code “P1843 ATF PRES SW 3/CIRC” with CONSULT-II is detected when TCM detects that actual gear ratio is normal, and relation between gear position and condition of ATF pressure switch 3 is irregular during depressing accelerator pedal. (Other than during shift change)

Possible Cause

ECS00CRX

- ATF pressure switch 3
- Harness or connectors
  (The switch circuit is open or shorted.)

DTC Confirmation Procedure

ECS00CRY

CAUTION:
Always drive vehicle at a safe speed.

NOTE:
If “DTC Confirmation Procedure” has been previously performed, always turn ignition switch “OFF” and wait at least 10 seconds before performing the next test.
After the repair, perform the following procedure to confirm the malfunction is eliminated.

WITH CONSULT-II

1. Start engine.
2. Accelerate vehicle to maintain the following conditions.
   ACCELE POS: 1.5/8 - 2.0/8
   Selector lever: “D” position
   Gear position: 3rd ⇒ 4th Gear (I/C ON/OFF)
   Driving location: Driving the vehicle uphill (increased engine load) will help maintain the driving conditions required for this test.
3. Perform step “2” again.
4. Turn ignition switch “OFF”, then perform step “1” to “3” again.
5. Check “SELF-DIAG RESULTS” mode for “A/T” with CONSULT-II.
   If DTC (P1843) is detected, go to AT-163, "Diagnostic Procedure" .
   If DTC (P1752) is detected, go to AT-141, "Diagnostic Procedure" .

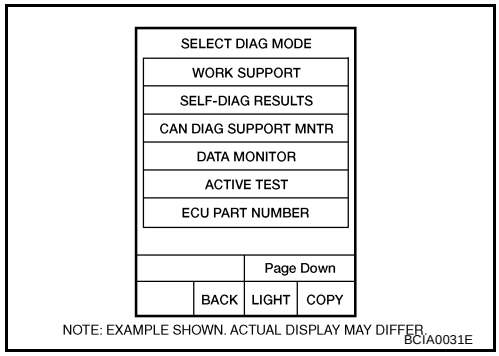

Diagnostic Procedure

ECS00CRZ

1. CHECK INPUT SIGNAL

With CONSULT-II

1. Start engine.
2. Select “ECU INPUT SIGNALS” or “MAIN SIGNALS” in “DATA MONITOR” mode for “A/T” with CONSULT-II.
3. Drive vehicle in the “D” position (3rd ⇒ 4th gear), and confirm the ON/OFF actuation of the “ATF PRES SW 3”.

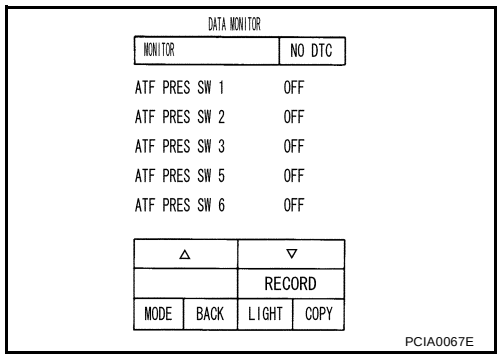

OK or NG

OK >> GO TO 4.
NG >> GO TO 2.

2. CHECK TCM POWER SUPPLY AND GROUND CIRCUIT

Check TCM power supply and ground circuit. Refer to AT-168, "MAIN POWER SUPPLY AND GROUND CIRCUIT" .

OK or NG

OK >> GO TO 3.
NG >> Repair or replace damaged parts.

3. DETECT MALFUNCTIONING ITEM

Check the following.

- The A/T assembly harness connector pin terminals for damage or loose connection with harness connector.

OK or NG

OK >> Replace the control valve with TCM. Refer to AT-228, "Control Valve With TCM and A/T Fluid Temperature Sensor 2" .
NG >> Repair or replace damaged parts.

4. CHECK DTC

Perform “DTC Confirmation Procedure”.

- Refer to AT-163, "Diagnostic Procedure" .

OK or NG

OK >> **INSPECTION END**
NG >> GO TO 2.

DTC P1845 ATF PRESSURE SWITCH 5

PFP:25240

Description

ECS00CS0

Fail-safe function to detect direct clutch solenoid valve condition.

CONSULT-II Reference Value

ECS00CS1

Item name	Condition	Display value
ATF PRES SW 5	Direct clutch engaged. Refer to AT-22 .	ON
	Direct clutch disengaged. Refer to AT-22 .	OFF

On Board Diagnosis Logic

ECS00CS2

- This is not an OBD-II self-diagnostic item.
- Diagnostic trouble code “P1845 ATF PRES SW 5/CIRC” with CONSULT-II is detected when TCM detects that actual gear ratio is normal, and relation between gear position and condition of ATF pressure switch 5 is irregular during depressing accelerator pedal. (Other than during shift change)

Possible Cause

ECS00CS3

- ATF pressure switch 5
- Harness or connectors
  (The switch circuit is open or shorted.)

DTC Confirmation Procedure

ECS00CS4

CAUTION:
Always drive vehicle at a safe speed.

NOTE:
If “DTC Confirmation Procedure” has been previously performed, always turn ignition switch “OFF” and wait at least 10 seconds before performing the next test.
After the repair, perform the following procedure to confirm the malfunction is eliminated.

WITH CONSULT-II

1. Start engine.
2. Accelerate vehicle to maintain the following conditions.
   ACCELE POS: 1.5/8 - 2.0/8
   Selector lever: “D” position
   Gear position: 1st ⇒ 2nd Gear (D/C ON/OFF)
   Driving location: Driving the vehicle uphill (increased engine load) will help maintain the driving conditions required for this test.
3. Perform step “2” again.
4. Turn ignition switch “OFF”, then perform step “1” to “3” again.
5. Check “SELF-DIAG RESULTS” mode for “A/T” with CONSULT-II.
   If DTC (P1845) is detected, go to AT-165, "Diagnostic Procedure" .
   If DTC (P1762) is detected, go to AT-149, "Diagnostic Procedure" .

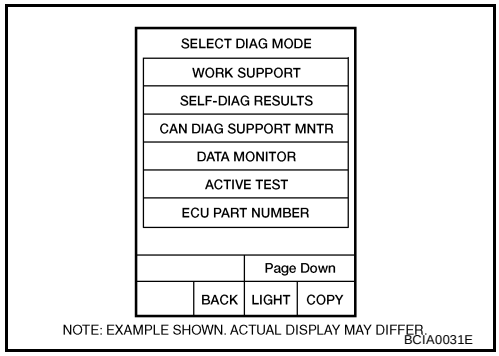

Diagnostic Procedure

ECS00CS5

1. CHECK INPUT SIGNAL

With CONSULT-II

1. Start engine.
2. Select “ECU INPUT SIGNALS” or “MAIN SIGNALS” in “DATA MONITOR” mode for “A/T” with CONSULT-II.
3. Drive vehicle in the “D” position (1st ⇒ 2nd gear), and confirm the ON/OFF actuation of the “ATF PRES SW 5”.

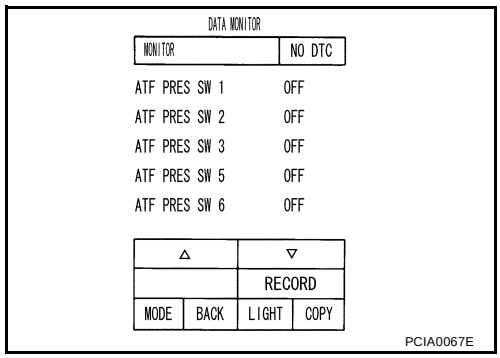

OK or NG

OK >> GO TO 4.
NG >> GO TO 2.

2. CHECK TCM POWER SUPPLY AND GROUND CIRCUIT

Check TCM power supply and ground circuit. Refer to AT-168, "MAIN POWER SUPPLY AND GROUND CIRCUIT" .

OK or NG

OK >> GO TO 3.
NG >> Repair or replace damaged parts.

3. DETECT MALFUNCTIONING ITEM

Check the following.

- The A/T assembly harness connector pin terminals for damage or loose connection with harness connector.

OK or NG

OK >> Replace the control valve with TCM. Refer to AT-228, "Control Valve With TCM and A/T Fluid Temperature Sensor 2" .
NG >> Repair or replace damaged parts.

4. CHECK DTC

Perform “DTC Confirmation Procedure”.

- Refer to AT-164, "DTC Confirmation Procedure" .

OK or NG

OK >> **INSPECTION END**
NG >> GO TO 2.

DTC P1846 ATF PRESSURE SWITCH 6

PFP:25240

Description

ECS00CS6

Fail-safe function to detect high and low reverse clutch solenoid valve condition.

CONSULT-II Reference Value

ECS00CS7

Item name	Condition	Display value
ATF PRES SW 6	High and low reverse clutch engaged. Refer to AT-22 .	ON
	High and low reverse clutch disengaged. Refer to AT-22 .	OFF

On Board Diagnosis Logic

ECS00CS8

- This is not an OBD-II self-diagnostic item.
- Diagnostic trouble code “P1846 ATF PRES SW 6/CIRC” with CONSULT-II is detected when TCM detects that actual gear ratio is normal, and relation between gear position and condition of ATF pressure switch 6 is irregular during depressing accelerator pedal. (Other than during shift change)

Possible Cause

ECS00CS9

- ATF pressure switch 6
- Harness or connectors
  (The switch circuit is open or shorted.)

DTC Confirmation Procedure

ECS00CSA

CAUTION:
Always drive vehicle at a safe speed.

NOTE:
If “DTC Confirmation Procedure” has been previously performed, always turn ignition switch “OFF” and wait at least 10 seconds before performing the next test.
After the repair, perform the following procedure to confirm the malfunction is eliminated.

WITH CONSULT-II

1. Start engine.
2. Accelerate vehicle to maintain the following conditions.
   ACCELE POS: 1.5/8 - 2.0/8
   Selector lever: “D” position
   Gear position: 2nd ⇒ 3rd Gear (HLR/C ON/OFF)
   Driving location: Driving the vehicle uphill (increased engine load) will help maintain the driving conditions required for this test.
3. Perform step “2” again.
4. Turn ignition switch “OFF”, then perform step “1” to “3” again.
5. Check “SELF-DIAG RESULTS” mode for “A/T” with CONSULT-II.
   If DTC (P1846) is detected, go to AT-167, "Diagnostic Procedure" .
   If DTC (P1767) is detected, go to AT-153, "Diagnostic Procedure" .

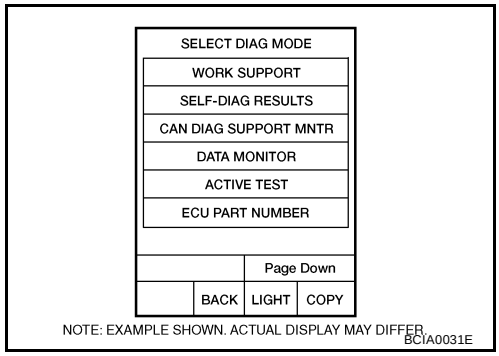

Diagnostic Procedure

ECS00CSB

1. CHECK INPUT SIGNAL

With CONSULT-II

1. Start the engine.
2. Select “ECU INPUT SIGNALS” or “MAIN SIGNALS” in “DATA MONITOR” mode for “A/T” with CONSULT-II.
3. Drive vehicle in the “D” position (2nd ⇒ 3rd gear), and confirm the ON/OFF actuation of the “ATF PRES SW 6”.

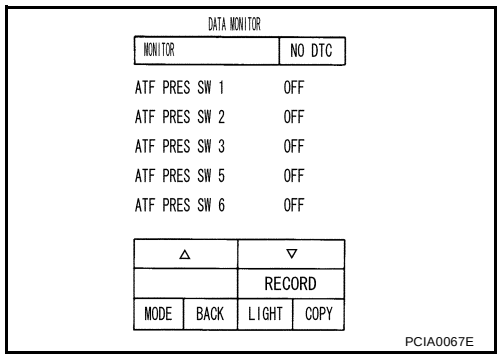

OK or NG

OK >> GO TO 4.
NG >> GO TO 2.

2. CHECK TCM POWER SUPPLY AND GROUND CIRCUIT

Check TCM power supply and ground circuit. Refer to AT-168, "MAIN POWER SUPPLY AND GROUND CIRCUIT" .

OK or NG

OK >> GO TO 3.
NG >> Repair or replace damaged parts.

3. DETECT MALFUNCTIONING ITEM

Check the following.

- The A/T assembly harness connector pin terminals for damage or loose connection with harness connector.

OK or NG

OK >> Replace the control valve with TCM. Refer to AT-228, "Control Valve With TCM and A/T Fluid Temperature Sensor 2" .
NG >> Repair or replace damaged parts.

4. CHECK DTC

Perform “DTC Confirmation Procedure”.

- Refer to AT-166, "DTC Confirmation Procedure" .

OK or NG

OK >> **INSPECTION END**
NG >> GO TO 2.

MAIN POWER SUPPLY AND GROUND CIRCUIT

PFP:00100

Wiring Diagram — AT — MAIN

ECS00CSC

AT-MAIN-01

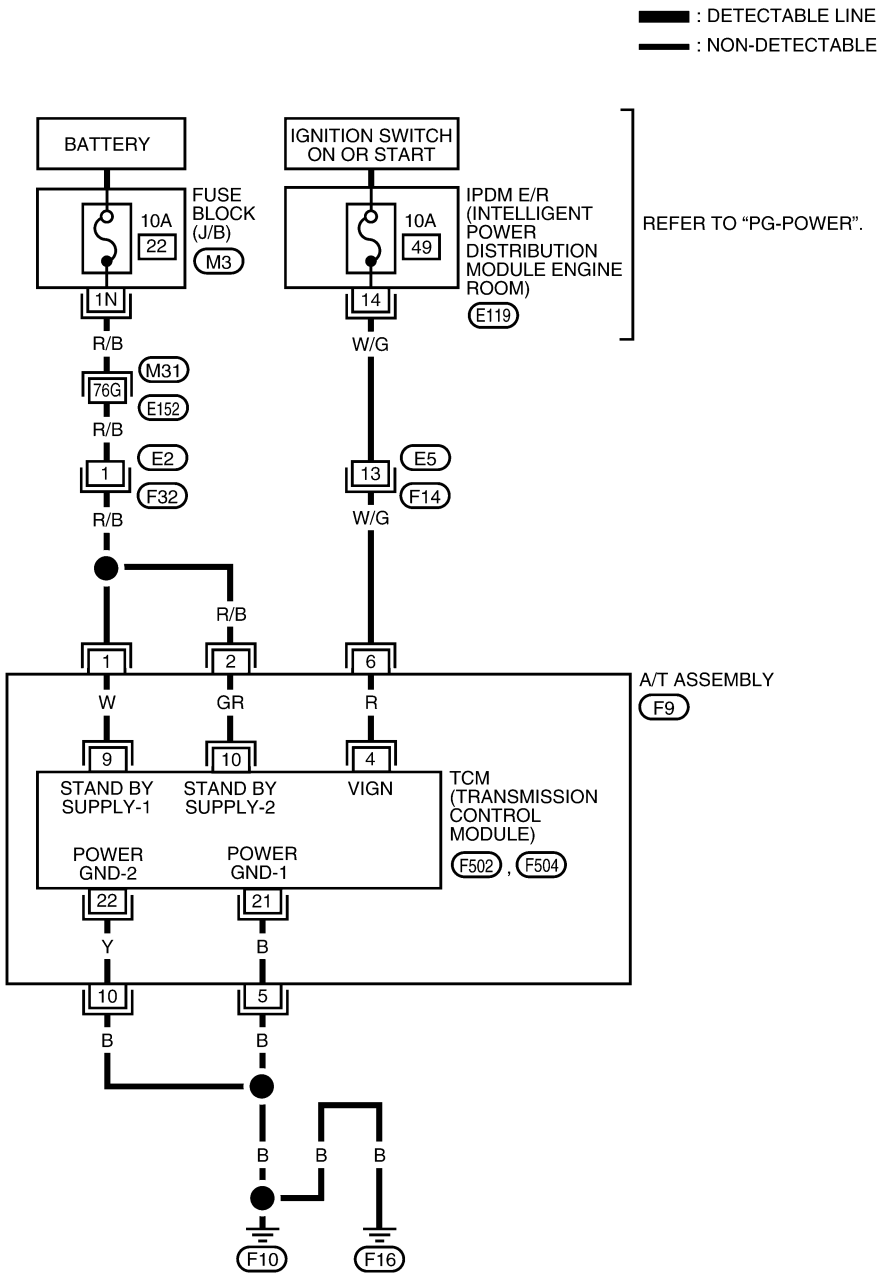

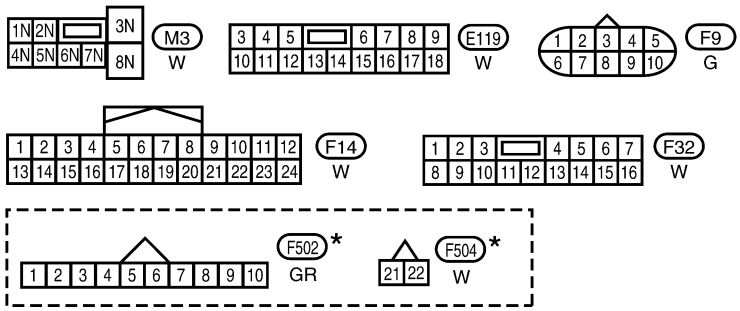

REFER TO THE FOLLOWING.
M31 - SUPER MULTIPLE JUNCTION (SMJ)

*: THIS CONNECTOR IS NOT SHOWN IN "HARNESS LAYOUT" OF PG SECTION.

BCWA0393E

TCM INPUT/OUTPUT SIGNAL REFERENCE VALUES

Refer to AT-87, "TCM Input/Output Signal Reference Values"

Diagnostic Procedure

ECS00CSD

1. CHECK TCM POWER SOURCE STEP 1

1. Turn ignition switch OFF.
2. Disconnect A/T assembly harness connector.
3. Check voltage between A/T assembly harness connector terminals and ground.

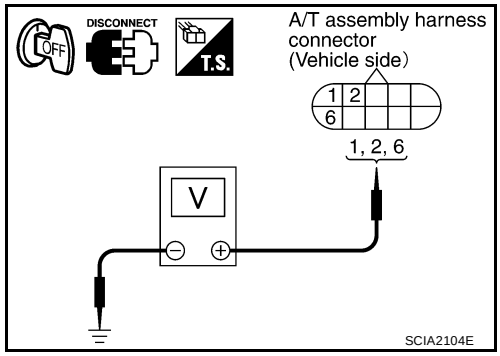

Item	Connector	Terminal	Voltage
TCM	F9	1 - Ground	Battery voltage
		2 - Ground	
		6 - Ground	0V

OK or NG

OK >> GO TO 2.
NG >> GO TO 3.

2. CHECK TCM POWER SOURCE STEP 2

1. Disconnect A/T assembly harness connector.
2. Turn ignition switch ON. (Do not start engine.)
3. Check voltage between A/T assembly harness connector terminals and ground.

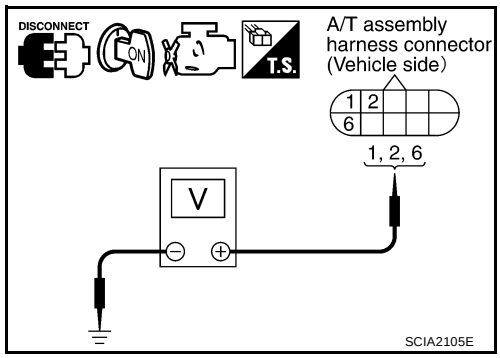

Item	Connector	Terminal	Voltage
TCM	F9	1 - Ground	Battery voltage
		2 - Ground	
		6 - Ground	

OK or NG

OK >> GO TO 4.
NG >> GO TO 3.

3. DETECT MALFUNCTIONING ITEM

Check the following.

- Harness for short or open between battery and A/T assembly harness connector terminals 1, 2
- Harness for short or open between ignition switch and A/T assembly harness connector terminal 6
- 10A fuse (No. 22, located in the fuse and fusible link block) and 10A fuse (No. 49, located in the IPDM E/R)
- Ignition switch. Refer to PG-4, "POWER SUPPLY ROUTING CIRCUIT" .

OK or NG

OK >> GO TO 4.
NG >> Repair or replace damaged parts.

4. CHECK TCM GROUND CIRCUIT

1. Turn ignition switch OFF.
2. Disconnect A/T assembly harness connector.
3. Check continuity between A/T assembly harness connector terminals and ground.

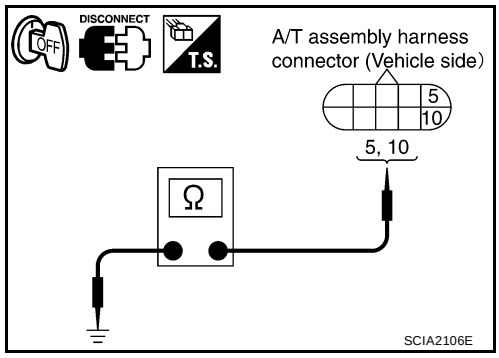

Item	Connector	Terminal	Continuity
TCM	F9	5, 10 - Ground	Yes

If OK, check harness for short to ground and short to power.

OK or NG

OK >> GO TO 5.
NG >> Repair open circuit or short to ground or short to power in harness or connectors.

5. DETECT MALFUNCTIONING ITEM

Check the following.

- The A/T assembly harness connector terminals for damage or loose connection with harness connector.

OK or NG

OK >> GO TO 6.
NG >> Repair or replace damaged parts.

6. PERFORM SELF-DIAGNOSIS

Perform self-diagnosis. Refer to AT-90, "SELF-DIAGNOSTIC RESULT MODE" .

OK or NG

OK >> **INSPECTION END**
NG-1 >> Self-diagnosis does not activate: GO TO 7.
NG-2 >> DTC is displayed: Check the malfunctioning system. Refer to AT-90, "SELF-DIAGNOSTIC RESULT MODE" .

7. CHECK TERMINAL CORD ASSEMBLY

1. Remove control valve with TCM. Refer to AT-228, "Control Valve With TCM and A/T Fluid Temperature Sensor 2" .
2. Disconnect A/T assembly harness connector and TCM connector.
3. Check continuity between A/T assembly harness connector terminals and TCM connector terminals.

Item	Connector	Terminal	Voltage
A/T assembly harness connector	F9	1	Yes
TCM connector	F502	9	
A/T assembly harness connector	F9	2	Yes
TCM connector	F502	10	
A/T assembly harness connector	F9	6	Yes
TCM connector	F502	4	

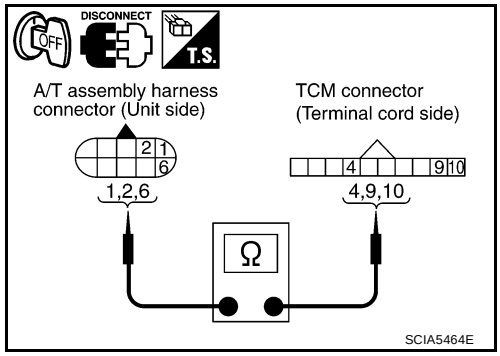

4. Check continuity between A/T assembly harness connector terminals and TCM connector terminals.

Item	Connector	Terminal	Voltage
A/T assembly harness connector	F9	5	Yes
TCM connector	F504	21	
A/T assembly harness connector	F9	10	Yes
TCM connector	F504	22	

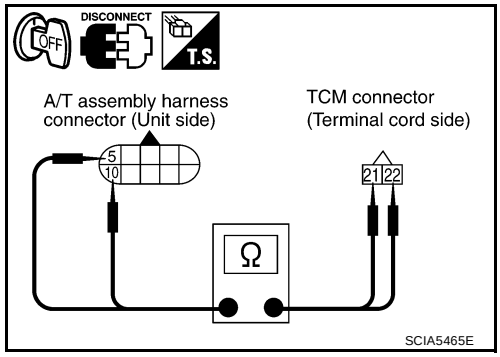

5. If OK, check harness for short to ground and short to power.

OK or NG

OK >> Replace the control valve with TCM. Refer to AT-228, "Control Valve With TCM and A/T Fluid Temperature Sensor 2" .

NG >> Replace open circuit or short to ground and short to power in harness or connectors.

CLOSED THROTTLE POSITION AND WIDE OPEN THROTTLE POSITION CIRCUIT

PFP:18002

CONSULT-II Reference Value

ECS00CSE

Item name	Condition	Display value
CLSD THL POS	Released accelerator pedal.	ON
	Fully depressed accelerator pedal.	OFF
W/O THL POS	Fully depressed accelerator pedal.	ON
	Released accelerator pedal.	OFF

Diagnostic Procedure

ECS00CSF

1. CHECK CAN COMMUNICATION LINE

Perform the self-diagnosis. Refer to AT-90, "SELF-DIAGNOSTIC RESULT MODE" .

Is a malfunction in the CAN communication indicated in the results?

YES >> Check CAN communication line. Refer to AT-98, "DTC U1000 CAN COMMUNICATION LINE" .
NO >> GO TO 2.

2. CHECK THROTTLE POSITION SIGNAL CIRCUIT

With CONSULT-II

1. Turn ignition switch “ON”. (Do not start engine.)
2. Select “ECU INPUT SIGNALS” in “DATA MONITOR” mode for “A/T” with CONSULT-II.
3. Depress accelerator pedal and read out the value of “CLSD THL POS” and “W/O THL POS”.

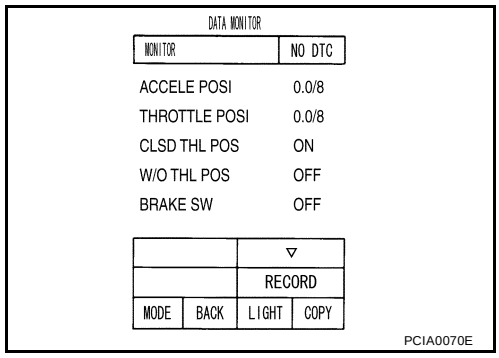

OK or NG

OK >> **INSPECTION END**
NG >> Check the following. If NG, repair or replace damaged parts.
- Perform the self-diagnosis for “ENGINE” with CONSULT-II.
- Open circuit or short to ground or short to power in harness or connectors.
- Pin terminals for damage or loose connection with harness connector.

BRAKE SIGNAL CIRCUIT

PFP:25320

CONSULT-II Reference Value

ECS00CSG

Item name	Condition	Display value
BRAKE SW	Depressed brake pedal.	ON
	Released brake pedal.	OFF

Diagnostic Procedure

ECS00CSH

1. CHECK CAN COMMUNICATION LINE

Perform the self-diagnosis. Refer to AT-90, "SELF-DIAGNOSTIC RESULT MODE" .

Is a malfunction in the CAN communication indicated in the results?

YES >> Check CAN communication line. Refer to AT-98, "DTC U1000 CAN COMMUNICATION LINE" .

NO >> GO TO 2.

2. CHECK STOP LAMP SWITCH CIRCUIT

With CONSULT-II

1. Turn ignition switch “ON”. (Do not start engine.)
2. Select “ECU INPUT SIGNALS” in “DATA MONITOR” mode for “A/T” with CONSULT-II.
3. Read out ON/OFF switching action of the “BRAKE SW”.

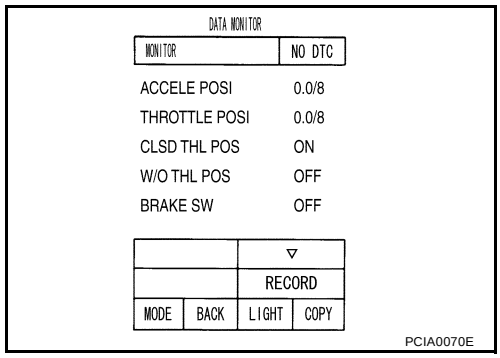

OK or NG

OK >> **INSPECTION END**

NG >> GO TO 3.

3. CHECK STOP LAMP SWITCH

Check continuity between stop lamp switch harness connector terminals 1 and 2.

Item	Connector	Condition	Terminal	Continuity
Stop lamp switch harness connector	E38	When brake pedal is depressed	1 - 2	Yes
		When brake pedal is released		No

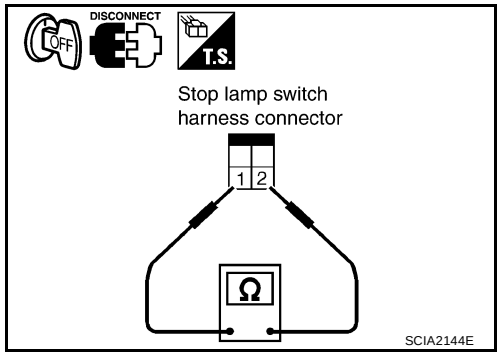

Check stop lamp switch after adjusting brake pedal — refer to BR-6, "BRAKE PEDAL" .

OK or NG

OK >> Check the following. If NG, repair or replace damaged parts.

- Harness for short or open between battery and stop lamp switch.
- Harness for short or open between stop lamp switch and combination meter.

NG >> Repair or replace the stop lamp switch.

OVERDRIVE CONTROL SWITCH

PFP:25130

CONSULT-II Reference Value

ECS00CSI

Item name	Condition	Display value
OD CONT SW	Releasing overdrive control switch	OFF
	Holding overdrive control switch	ON

Diagnostic Procedure

ECS00CSJ

1. CHECK CAN COMMUNICATION LINE

Perform the self-diagnosis. Refer to AT-90, "SELF-DIAGNOSTIC RESULT MODE" .

Is any malfunction in the CAN communication indicated in the results?

YES >> Check CAN communication line. Refer to AT-98, "DTC U1000 CAN COMMUNICATION LINE" .
NO >> GO TO 2.

2. CHECK OVERDRIVE CONTOROL SWITCH CIRCUIT

With CONSULT-II

1. Turn ignition switch “ON”.
2. Select “ECU INPUT SIGNALS” in “DATA MONITOR” mode for “A/T” with CONSULT-II.
3. Read out “OD CONT SW”.
   Check the signal of the overdrive control switch is indicated properly.

Monitor item	Condition	Display value
OD CONT SW	Releasing overdrive control switch	OFF
	Holding overdrive control switch	ON

DATA MONITOR	
MONITORING	
1 POSITION SW	OFF
OD CONT SW	ON
POWERSHIFT SW	OFF
HOLD SW	OFF
MANU MODE SW	OFF

LCIA0339E

Without CONSULT-II

1. Turn ignition switch “ON”. (Do not start engine)
2. Check voltage between A/T control device connector terminal and ground.

Item	Connector No.	Terminal No.	Condition	Data (Approx.)
Overdrive control switch	M156	7 - Ground	Releasing overdrive control switch	Battery voltage
			Holding overdrive control switch	0V

OK or NG

OK >> GO TO 5.
NG >> GO TO 3.

3. CHECK OVERDRIVE CONTROL SWITCH

1. Turn ignition switch “OFF”.
2. Disconnect A/T control device connector.
3. Check continuity between A/T control device connector M156 terminals 7 and 8.

Condition	Continuity
Releasing overdrive control switch	No
Holding overdrive control switch	Yes

OK or NG

OK >> GO TO 4.
NG >> Repair or replace overdrive control switch.

4. DETECT MALFUNCTIONING ITEM

Check the following. If any items are damaged, repair or replace damaged parts.

- Harness for short or open between combination meter connector terminal 20 and A/T control device connector terminal 7.
- Harness for short or open between A/T control device connector terminal 8 and ground.

OK or NG

OK >> GO TO 5.
NG >> Repair or replace damaged parts.

5. CHECK COMBINATION METER

Check the combination meter. Refer to DI-17, "How to Proceed With Trouble Diagnosis" .

OK or NG

OK >> **INSPECTION END**
NO >> Repair or replace damaged parts.

TROUBLE DIAGNOSIS FOR SYMPTOMS

PFP:00007

Wiring Diagram — AT — NONDTC

ECS00CSK

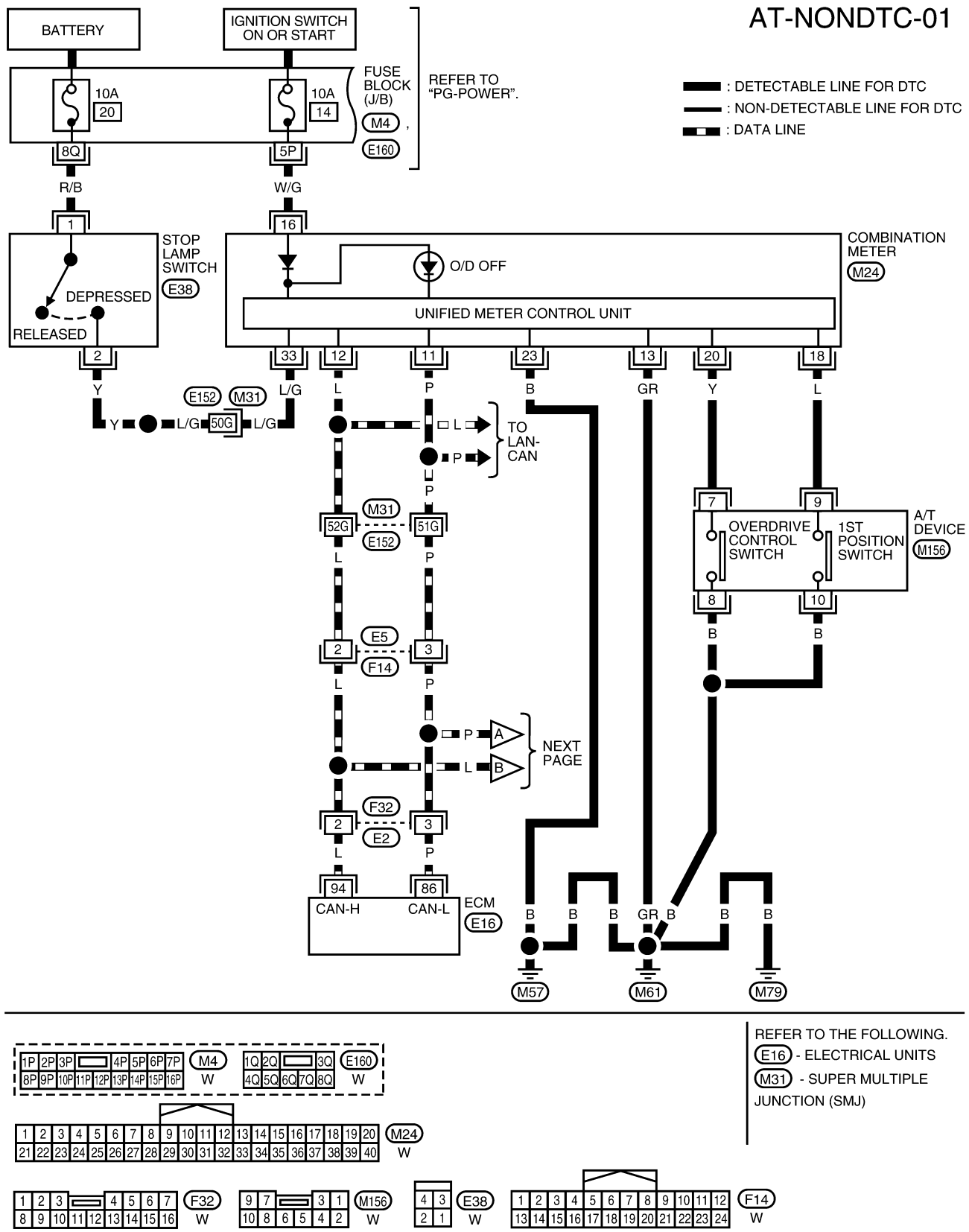

BCWA0584E

AT-NONDTC-02

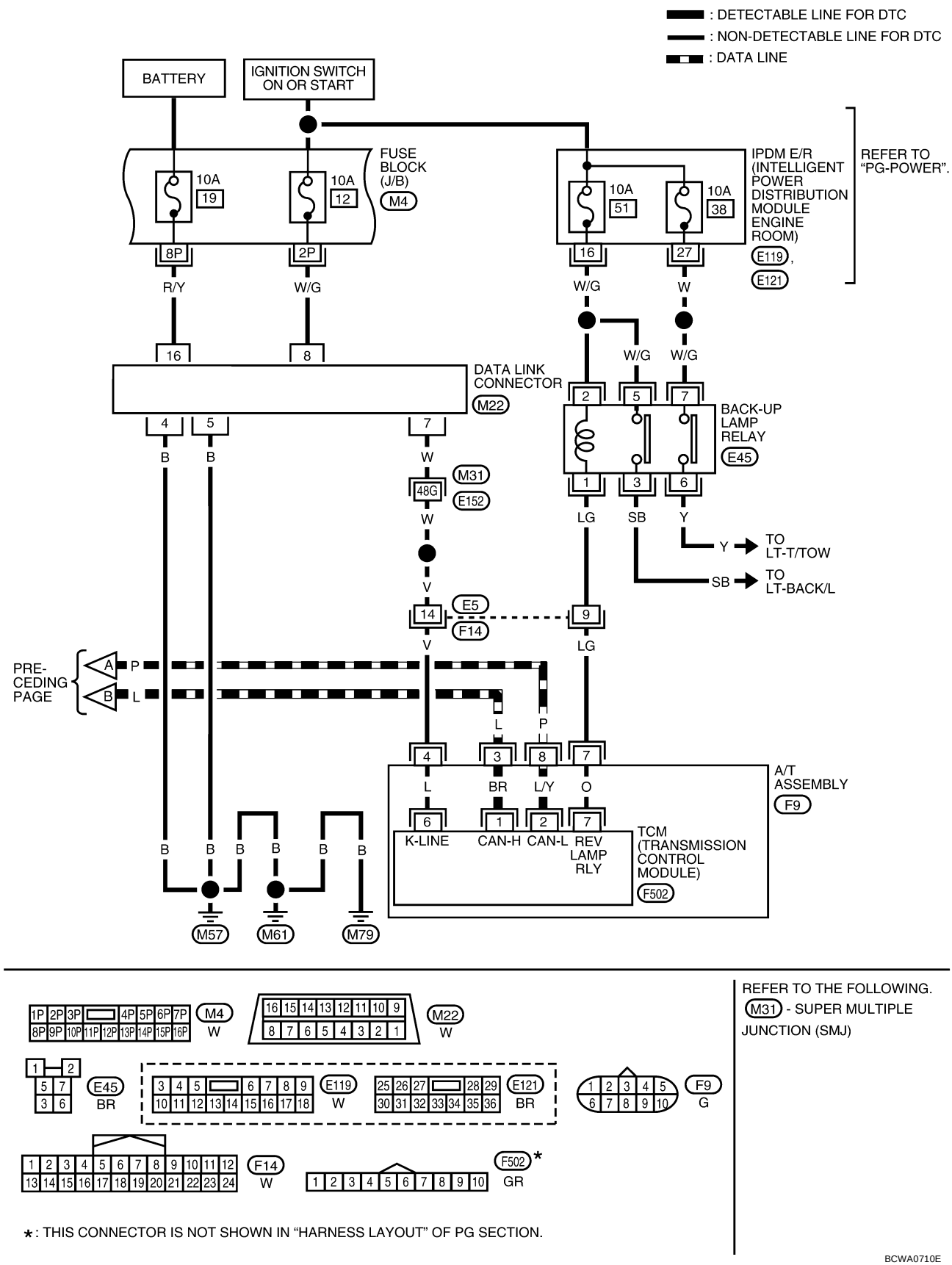
: DETECTABLE LINE FOR DTC
: NON-DETECTABLE LINE FOR DTC
: DATA LINE
BATTERY
IGNITION SWITCH ON OR START
FUSE BLOCK (J/B)
M4
10A 19
10A 12
IPDM E/R (INTELLIGENT POWER DISTRIBUTION MODULE ENGINE ROOM)
E119, E121
10A 51
10A 38
REFER TO "PG-POWER".
8P
2P
16
27
R/Y
W/G
W/G
W
16
8
DATA LINK CONNECTOR
M22
W/G
W/G
BACK-UP LAMP RELAY
E45
4
5
7
B
B
W
M31
48G
E152
W
V
14
E5
F14
V
9
LG
LG
SB
Y
Y → TO LT-T/TOW
SB → TO LT-BACK/L
PRE-CEDING PAGE
A P
B L
L
P
4
3
8
7
L
BR
L/Y
O
A/T ASSEMBLY
F9
6
1
2
7
K-LINE
CAN-H
CAN-L
REV LAMP RLY
TCM (TRANSMISSION CONTROL MODULE)
F502
B B B B B B
M57
M61
M79
M4 W
M22 W
E45 BR
E119 W
E121 BR
F9 G
F14 W
F502* GR
*: THIS CONNECTOR IS NOT SHOWN IN "HARNESS LAYOUT" OF PG SECTION.
REFER TO THE FOLLOWING.
M31 - SUPER MULTIPLE JUNCTION (SMJ)
BCWA0710E

TCM INPUT/OUTPUT SIGNAL REFERENCE VALUES

Refer to AT-87, "TCM Input/Output Signal Reference Values" .

O/D OFF Indicator Lamp Does Not Come On

ECS00CSL

SYMPTOM:

O/D OFF indicator lamp does not come on for about 2 seconds when turning ignition switch to “ON”.

DIAGNOSTIC PROCEDURE

1. CHECK CAN COMMUNICATION LINE

Perform self-diagnosis. Refer to AT-90, "SELF-DIAGNOSTIC RESULT MODE" , AT-96, "TCM SELF-DIAGNOSTIC PROCEDURE (NO TOOLS)" .

Is a malfunction in the CAN communication indicated in the results?

YES >> Check CAN communication line. Refer to AT-98, "DTC U1000 CAN COMMUNICATION LINE" .
NO >> GO TO 2.

2. CHECK O/D OFF INDICATOR LAMP CIRCUIT

Check the combination meter. Refer to DI-4, "COMBINATION METERS" .

OK or NG

OK >> GO TO 3
NG >> Repair or replace damaged parts.

3. CHECK TCM POWER SUPPLY AND GROUND CIRCUIT

Check TCM power supply and ground circuit. Refer to AT-168, "MAIN POWER SUPPLY AND GROUND CIRCUIT" .

OK or NG

OK >> **INSPECTION END**
NG >> Repair or replace damaged parts.

Engine Cannot Be Started In “P” or “N” Position

ECS00CSM

SYMPTOM:

- **Engine cannot be started with selector lever in “P” or “N” position.**
- **Engine can be started with selector lever in “D”, “3”, “2”, “1”or “R” position.**

DIAGNOSTIC PROCEDURE

1. CHECK SELF-DIAGNOSIS RESULTS

Perform self-diagnosis. Refer to AT-90, "SELF-DIAGNOSTIC RESULT MODE" .

Do the self-diagnosis results indicate PNP switch?

YES >> Check the malfunctioning system. Refer to AT-106, "DTC P0705 PARK/NEUTRAL POSITION SWITCH" .

NO >> GO TO 2.

2. CHECK CONTROL CABLE

Check the control cable.

- Refer to AT-217, "Checking of A/T Position" .

OK or NG

OK >> GO TO 3.

NG >> Adjust control cable. Refer to AT-217, "Adjustment of A/T Position" .

3. CHECK STARTING SYSTEM

Check the starting system. Refer to SC-10, "STARTING SYSTEM" .

OK or NG

OK >> **INSPECTION END**

NG >> Repair or replace damaged parts.

In “P” Position, Vehicle Moves When Pushed

ECS00CSN

SYMPTOM:

Even though the selector lever is set in the “P” position, the parking mechanism is not actuated, allowing the vehicle to be moved when it is pushed.

DIAGNOSTIC PROCEDURE

1. CHECK PNP SWITCH CIRCUIT

Perform self-diagnosis. Refer to AT-90, "SELF-DIAGNOSTIC RESULT MODE" .

Do the self-diagnosis results indicate PNP switch?

YES >> Check the malfunctioning system. Refer to AT-106, "DTC P0705 PARK/NEUTRAL POSITION SWITCH" .

NO >> GO TO 2.

2. CHECK CONTROL CABLE

Check the control cable.

- Refer to AT-217, "Checking of A/T Position" .

OK or NG

OK >> GO TO 3.

NG >> Adjust control cable. Refer to AT-217, "Adjustment of A/T Position" .

3. CHECK A/T FLUID CONDITION

1. Remove oil pan. Refer to AT-228, "Control Valve With TCM and A/T Fluid Temperature Sensor 2" .
2. Check A/T fluid condition. Refer to AT-54, "Fluid Condition Check" .

OK or NG

OK >> **INSPECTION END**

NG >> GO TO 4.

4. DETECT MALFUNCTIONING ITEM

- Check the malfunction items. If any items are damaged, repair or replace damaged parts. Refer to AT-65, "Symptom Chart" (Symptom No.58).

OK or NG

OK >> **INSPECTION END**

NG >> Repair or replace damaged parts.

In “N” Position, Vehicle Moves

ECS00CSO

SYMPTOM:

Vehicle moves forward or backward when selecting “N” position.

DIAGNOSTIC PROCEDURE

1. CHECK PNP SWITCH CIRCUIT

Perform self-diagnosis. Refer to AT-90, "SELF-DIAGNOSTIC RESULT MODE" .

Do the self-diagnostic results indicate PNP switch?

YES >> Check the malfunctioning system. Refer to AT-106, "DTC P0705 PARK/NEUTRAL POSITION SWITCH" .

NO >> GO TO 2.

2. CHECK CONTROL CABLE

Check the control cable.

- Refer to AT-217, "Checking of A/T Position" .

OK or NG

OK >> GO TO 3.

NG >> Adjust control cable. Refer to AT-217, "Adjustment of A/T Position" .

3. CHECK A/T FLUID LEVEL

Check A/T fluid level. Refer to AT-13, "Checking the A/T Fluid (ATF)" .

OK or NG

OK >> GO TO 4.

NG >> Refill ATF.

4. CHECK A/T FLUID CONDITION

1. Remove oil pan. Refer to AT-228, "Control Valve With TCM and A/T Fluid Temperature Sensor 2" .
2. Check A/T fluid condition. Refer to AT-54, "Fluid Condition Check" .

OK or NG

OK >> GO TO 5.

NG >> Check the malfunction items. If any items are damaged, repair or replace damaged parts. Refer to AT-65, "Symptom Chart" (Symptom No.60).

5. CHECK SYMPTOM

Check again. Refer to AT-58, "Check at Idle" .

OK or NG

OK >> **INSPECTION END**

NG >> GO TO 6.

6. PERFORM TCM INSPECTION

1. Perform TCM input/output signals inspection. Refer to AT-87, "TCM Input/Output Signal Reference Values" .
2. If NG, recheck A/T assembly harness connector terminals for damage or loose connection with harness connector.

OK or NG

OK >> **INSPECTION END**

NG >> Repair or replace damaged parts.

Large Shock (“N” to “D” Position)

ECS00CSP

SYMPTOM:

A noticeable shock occurs when the selector lever is shifted from the “N” to “D” position.

DIAGNOSTIC PROCEDURE

1. CHECK SELF-DIAGNOSTIC RESULTS

Perform self-diagnosis. Refer to AT-90, "SELF-DIAGNOSTIC RESULT MODE" .

Is any malfunction detected by self-diagnostic results?

YES >> Check the malfunctioning system. Refer to AT-90, "SELF-DIAGNOSTIC RESULT MODE" .
NO >> GO TO 2.

2. ENGINE IDLE SPEED

Check the engine idle speed. Refer to EC-76, "Idle Speed and Ignition Timing Check" .

OK or NG

OK >> GO TO 3.
NG >> Repair.

3. CHECK CONTROL CABLE

Check the control cable.

- Refer to AT-217, "Checking of A/T Position" .

OK or NG

OK >> GO TO 4.
NG >> Adjust control cable. Refer to AT-217, "Adjustment of A/T Position" .

4. CHECK A/T FLUID LEVEL

Check the A/T fluid level. Refer to AT-13, "Checking the A/T Fluid (ATF)" .

OK or NG

OK >> GO TO 5.
NG >> Refill ATF.

5. CHECK LINE PRESSURE

Check line pressure at idle with selector lever in “D” position. Refer to AT-55, "LINE PRESSURE TEST" .

OK or NG

OK >> GO TO 8.
NG - 1 >> Line pressure high: GO TO 6.
NG - 2 >> Line pressure low: GO TO 7.

6. DETECT MALFUNCTIONING ITEM

1. Check control valve with TCM. Refer to AT-228, "Control Valve With TCM and A/T Fluid Temperature Sensor 2" .
2. Disassemble A/T. Refer to AT-259, "DISASSEMBLY" .
3. Check the following.

– Oil pump assembly. Refer to AT-277, "Oil Pump" .

OK or NG

OK >> GO TO 8.
NG >> Repair or replace damaged parts.

7. DETECT MALFUNCTIONING ITEM

1. Check control valve with TCM. Refer to AT-228, "Control Valve With TCM and A/T Fluid Temperature Sensor 2" .
2. Disassemble A/T. Refer to AT-259, "DISASSEMBLY" .
3. Check the following.

- Oil pump assembly. Refer to AT-277, "Oil Pump" .
- Power train system. Refer to AT-259, "DISASSEMBLY" .
- Transmission case. Refer to AT-259, "DISASSEMBLY" .

OK or NG

OK >> GO TO 8.
NG >> Repair or replace damaged parts.

8. CHECK A/T FLUID CONDITION

1. Remove oil pan. Refer to AT-228, "Control Valve With TCM and A/T Fluid Temperature Sensor 2" .
2. Check A/T fluid condition. Refer to AT-54, "Fluid Condition Check" .

OK or NG

OK >> GO TO 10.
NG >> GO TO 9.

9. DETECT MALFUNCTIONING ITEM

- Check the malfunction items. If any items are damaged, repair or replace damaged parts. Refer to AT-65, "Symptom Chart" (Symptom No.1).

OK or NG

OK >> GO TO 10.
NG >> Repair or replace damaged parts.

10. CHECK SYMPTOM

Check again. Refer to AT-58, "Check at Idle" .

OK or NG

OK >> **INSPECTION END**
NG >> GO TO 11.

11. PERFORM TCM INSPECTION

1. Perform TCM input/output signals inspection. Refer to AT-87, "TCM Input/Output Signal Reference Values" .
2. If NG, recheck A/T assembly harness connector terminals for damage or loose connection with harness connector.

OK or NG

OK >> **INSPECTION END**
NG >> Repair or replace damaged parts.

Vehicle Does Not Creep Backward In “R” Position

ECS00CSQ

SYMPTOM:

The vehicle does not creep in the “R” position. Or an extreme lack of acceleration is observed.

DIAGNOSTIC PROCEDURE

1. CHECK SELF-DIAGNOSTIC RESULTS

Perform self-diagnosis. Refer to AT-90, "SELF-DIAGNOSTIC RESULT MODE" .

Is any malfunction detected by self-diagnostic results?

YES >> Check the malfunctioning system. Refer to AT-90, "SELF-DIAGNOSTIC RESULT MODE" .
NO >> GO TO 2.

2. CHECK CONTROL CABLE

Check the control cable.

- Refer to AT-217, "Checking of A/T Position" .

OK or NG

OK >> GO TO 3.
NG >> Adjust control cable. Refer to AT-217, "Adjustment of A/T Position" .

3. CHECK A/T FLUID LEVEL

Check A/T fluid level. Refer to AT-13, "Checking the A/T Fluid (ATF)" .

OK or NG

OK >> GO TO 4.
NG >> Refill ATF.

4. CHECK STALL TEST

Check stall revolution with selector lever in “1” and “R” positions.
Refer to AT-54, "STALL TEST" .

OK or NG

OK >> GO TO 6.
OK in “1” position, NG in “R” position>>GO TO 5.
NG in both “1” and “R” positions>>GO TO 8.

5. DETECT MALFUNCTIONING ITEM

1. Disassemble A/T. Refer to AT-259, "DISASSEMBLY" .
2. Check the following items:

– Reverse brake. Refer to AT-259, "DISASSEMBLY" .

OK or NG

OK >> GO TO 9.
NG >> Repair or replace damaged parts.

6. CHECK LINE PRESSURE

Check the line pressure with the engine idling. Refer to AT-55, "LINE PRESSURE TEST" .

OK or NG

OK >> GO TO 9.
NG - 1 >> Line pressure high. GO TO 7.
NG - 2 >> Line pressure low. GO TO 8.

7. DETECT MALFUNCTIONING ITEM

1. Check control valve with TCM. Refer to AT-228, "Control Valve With TCM and A/T Fluid Temperature Sensor 2" .
2. Disassemble A/T. Refer to AT-259, "DISASSEMBLY" .
3. Check the following.

– Oil pump assembly. Refer to AT-277, "Oil Pump" .

OK or NG

OK >> GO TO 9.
NG >> Repair or replace damaged parts.

8. DETECT MALFUNCTIONING ITEM

1. Check control valve with TCM. Refer to AT-228, "Control Valve With TCM and A/T Fluid Temperature Sensor 2" .
2. Disassemble A/T. Refer to AT-259, "DISASSEMBLY" .
3. Check the following.

– Oil pump assembly. Refer to AT-277, "Oil Pump" .
– Power train system. Refer to AT-259, "DISASSEMBLY" .
– Transmission case. Refer to AT-259, "DISASSEMBLY" .

OK or NG

OK >> GO TO 9.
NG >> Repair or replace damaged parts.

9. CHECK A/T FLUID CONDITION

1. Remove oil pan. Refer to AT-228, "Control Valve With TCM and A/T Fluid Temperature Sensor 2" .
2. Check A/T fluid condition. Refer to AT-54, "Fluid Condition Check" .

OK or NG

OK >> GO TO 10.
NG >> GO TO 13.

10. DETECT MALFUNCTIONING ITEM

- Check the malfunction items. If any items are damaged, repair or replace damaged parts. Refer to AT-65, "Symptom Chart" (Symptom No.43).

OK or NG

OK >> GO TO 11.
NG >> Repair or replace damaged parts.

11. CHECK SYMPTOM

Check again. Refer to AT-58, "Check at Idle" .

OK or NG

OK >> **INSPECTION END**
NG >> GO TO 12.

12. PERFORM TCM INSPECTION

1. Perform TCM input/output signals inspection. Refer to AT-87, "TCM Input/Output Signal Reference Values" .
2. If NG, recheck A/T assembly harness connector terminals for damage or loose connection with harness connector.

OK or NG

OK >> **INSPECTION END**
NG >> Repair or replace damaged parts.

13. DETECT MALFUNCTIONING ITEM

- Check the malfunction items. If any items are damaged, repair or replace damaged parts. Refer to AT-65, "Symptom Chart" (Symptom No.43).

OK or NG

OK >> GO TO 11.
NG >> Repair or replace damaged parts.

Vehicle Does Not Creep Forward In “D” Position

ECS00CSR

SYMPTOM:

Vehicle does not creep forward when selecting “D” position.

DIAGNOSTIC PROCEDURE

1. CHECK SELF-DIAGNOSTIC RESULTS

Perform self-diagnosis. Refer to AT-90, "SELF-DIAGNOSTIC RESULT MODE" .

Is any malfunction detected by self-diagnostic results?

YES >> Check the malfunctioning system. Refer to AT-90, "SELF-DIAGNOSTIC RESULT MODE" .
NO >> GO TO 2.

2. CHECK CONTROL CABLE

Check the control cable.

- Refer to AT-217, "Checking of A/T Position" .

OK or NG

OK >> GO TO 3.
NG >> Adjust control cable. Refer to AT-217, "Adjustment of A/T Position" .

3. CHECK A/T FLUID LEVEL

Check A/T fluid level. Refer to AT-13, "Checking the A/T Fluid (ATF)" .

OK or NG

OK >> GO TO 4.
NG >> Refill ATF.

4. CHECK STALL TEST

Check stall revolution with selector lever in “D” position. Refer to AT-54, "STALL TEST" .

OK or NG

OK >> GO TO 5.
NG >> GO TO 7.

5. CHECK LINE PRESSURE

Check line pressure at idle with selector lever in “D” position. Refer to AT-55, "LINE PRESSURE TEST" .

OK or NG

OK >> GO TO 8.
NG - 1 >> Line pressure high. GO TO 6.
NG - 2 >> Line pressure low. GO TO 7.

6. DETECT MALFUNCTIONING ITEM

1. Check control valve with TCM. Refer to AT-228, "Control Valve With TCM and A/T Fluid Temperature Sensor 2" .
2. Disassemble A/T. Refer to AT-259, "DISASSEMBLY" .
3. Check the following items:

– Oil pump assembly. Refer to AT-277, "Oil Pump" .

OK or NG

OK >> GO TO 8.
NG >> Repair or replace damaged parts.

7. DETECT MALFUNCTIONING ITEM

1. Check control valve with TCM. Refer to AT-228, "Control Valve With TCM and A/T Fluid Temperature Sensor 2" .
2. Disassemble A/T. Refer to AT-259, "DISASSEMBLY" .
3. Check the following.

- Oil pump assembly. Refer to AT-277, "Oil Pump" .
- Power train system. Refer to AT-259, "DISASSEMBLY" .
- Transmission case. Refer to AT-259, "DISASSEMBLY" .

OK or NG

OK >> GO TO 8.
NG >> Repair or replace damaged parts.

8. CHECK A/T FLUID CONDITION

1. Remove oil pan. Refer to AT-228, "Control Valve With TCM and A/T Fluid Temperature Sensor 2" .
2. Check A/T fluid condition. Refer to AT-54, "Fluid Condition Check" .

OK or NG

OK >> GO TO 9.
NG >> GO TO 12.

9. DETECT MALFUNCTIONING ITEM

- Check the malfunction items. If any items are damaged, repair or replace damaged parts. Refer to AT-65, "Symptom Chart" (Symptom No.43).

OK or NG

OK >> GO TO 10.
NG >> Repair or replace damaged parts.

10. CHECK SYMPTOM

Check again. Refer to AT-58, "Check at Idle" .

OK or NG

OK >> **INSPECTION END**
NG >> GO TO 11.

11. PERFORM TCM INSPECTION

1. Perform TCM input/output signals inspection. Refer to AT-87, "TCM Input/Output Signal Reference Values" .
2. If NG, recheck A/T assembly harness connector terminals for damage or loose connection with harness connector.

OK or NG

OK >> **INSPECTION END**
NG >> Repair or replace damaged parts.

12. DETECT MALFUNCTIONING ITEM

- Check the malfunction items. If any items are damaged, repair or replace damaged parts. Refer to AT-65, "Symptom Chart" (Symptom No.43).

OK or NG

OK >> GO TO 10.
NG >> Repair or replace damaged parts.

Vehicle Cannot Be Started From D1

ECS00CSS

SYMPTOM:

Vehicle cannot be started from D1 on cruise test - Part 1.

DIAGNOSTIC PROCEDURE

1. CONFIRM THE SYMPTOM

Check if vehicle creeps in “R” position.

OK or NG

OK >> GO TO 2.
NG >> Refer to AT-184, "Vehicle Does Not Creep Backward In “R” Position" .

2. CHECK SELF-DIAGNOSTIC RESULTS

Perform self-diagnosis. Refer to AT-90, "SELF-DIAGNOSTIC RESULT MODE" .

Is any malfunction detected by self-diagnostic results?

YES >> Check the malfunctioning system. Refer to AT-90, "SELF-DIAGNOSTIC RESULT MODE" .
NO >> GO TO 3.

3. CHECK ACCELERATOR PEDAL POSITION (APP) SENSOR

Check accelerator pedal position (APP) sensor. Refer to AT-125, "DTC P1705 THROTTLE POSITION SENSOR" .

OK or NG

OK >> GO TO 4.
NG >> Repair or replace accelerator pedal position (APP) sensor.

4. CHECK A/T FLUID LEVEL

Check A/T fluid level. Refer to AT-13, "Checking the A/T Fluid (ATF)" .

OK or NG

OK >> GO TO 5.
NG >> Refill ATF.

5. CHECK LINE PRESSURE

Check line pressure at the engine stall point. Refer to AT-55, "LINE PRESSURE TEST" .

OK or NG

OK >> GO TO 8.
NG - 1 >> Line pressure high. GO TO 6.
NG - 2 >> Line pressure low. GO TO 7.

6. DETECT MALFUNCTIONING ITEM

1. Check control valve with TCM. Refer to AT-228, "Control Valve With TCM and A/T Fluid Temperature Sensor 2" .
2. Disassemble A/T. Refer to AT-259, "DISASSEMBLY" .
3. Check the following.

– Oil pump assembly. Refer to AT-277, "Oil Pump" .

OK or NG

OK >> GO TO 8.
NG >> Repair or replace damaged parts.

7. DETECT MALFUNCTIONING ITEM

1. Check control valve with TCM. Refer to AT-228, "Control Valve With TCM and A/T Fluid Temperature Sensor 2" .
2. Disassemble A/T. Refer to AT-259, "DISASSEMBLY" .
3. Check the following.

- Oil pump assembly. Refer to AT-277, "Oil Pump" .
- Power train system. Refer to AT-259, "DISASSEMBLY" .
- Transmission case. Refer to AT-259, "DISASSEMBLY" .

OK or NG

OK >> GO TO 8.
NG >> Repair or replace damaged parts.

8. CHECK A/T FLUID CONDITION

1. Remove oil pan. Refer to AT-228, "Control Valve With TCM and A/T Fluid Temperature Sensor 2" .
2. Check A/T fluid condition. Refer to AT-54, "Fluid Condition Check" .

OK or NG

OK >> GO TO 9.
NG >> GO TO 12.

9. DETECT MALFUNCTIONING ITEM

- Check the malfunction items. If any items are damaged, repair or replace damaged parts. Refer to AT-65, "Symptom Chart" (Symptom No.23).

OK or NG

OK >> GO TO 10.
NG >> Repair or replace damaged parts.

10. CHECK SYMPTOM

Check again. Refer to AT-59, "Cruise Test - Part 1" , AT-61, "Cruise Test - Part 2" .

OK or NG

OK >> **INSPECTION END**
NG >> GO TO 11.

11. PERFORM TCM INSPECTION

1. Perform TCM input/output signals inspection. Refer to AT-87, "TCM Input/Output Signal Reference Values" .
2. If NG, recheck A/T assembly harness connector terminals for damage or loose connection with harness connector.

OK or NG

OK >> **INSPECTION END**
NG >> Repair or replace damaged parts.

12. DETECT MALFUNCTIONING ITEM

- Check the malfunction items. If any items are damaged, repair or replace damaged parts. Refer to AT-65, "Symptom Chart" (Symptom No.23).

OK or NG

OK >> GO TO 10.
NG >> Repair or replace damaged parts.

A/T Does Not Shift: $D_1 \rightarrow D_2$

ECS00CST

SYMPTOM:

The vehicle does not shift-up from the D_1 to D_2 gear at the specified speed.

DIAGNOSTIC PROCEDURE

1. CONFIRM THE SYMPTOM

Check if vehicle creeps forward in “D” position and vehicle can be started from D_1.

OK or NG

OK >> GO TO 2.
NG >> Refer to AT-187, "Vehicle Does Not Creep Forward In “D” Position" , AT-189, "Vehicle Cannot Be Started From D_1" .

2. CHECK SELF-DIAGNOSTIC RESULTS

Perform self-diagnosis. Refer to AT-90, "SELF-DIAGNOSTIC RESULT MODE" .

Is any malfunction detected by self-diagnostic results?

YES >> Check the malfunctioning system. Refer to AT-90, "SELF-DIAGNOSTIC RESULT MODE" .
NO >> GO TO 3.

3. CHECK A/T FLUID LEVEL

Check A/T fluid level. Refer to AT-13, "Checking the A/T Fluid (ATF)" .

OK or NG

OK >> GO TO 4.
NG >> Refill ATF.

4. CHECK LINE PRESSURE

Check line pressure at the engine stall point. Refer to AT-55, "LINE PRESSURE TEST" .

OK or NG

OK >> GO TO 7.
NG - 1 >> Line pressure high. GO TO 5.
NG - 2 >> Line pressure low. GO TO 6.

5. DETECT MALFUNCTIONING ITEM

1. Check control valve with TCM. Refer to AT-228, "Control Valve With TCM and A/T Fluid Temperature Sensor 2" .
2. Disassemble A/T. Refer to AT-259, "DISASSEMBLY" .
3. Check the following.

– Oil pump assembly. Refer to AT-277, "Oil Pump" .

OK or NG

OK >> GO TO 7.
NG >> Repair or replace damaged parts.

6. DETECT MALFUNCTIONING ITEM

1. Check control valve with TCM. Refer to AT-228, "Control Valve With TCM and A/T Fluid Temperature Sensor 2" .
2. Disassemble A/T. Refer to AT-259, "DISASSEMBLY" .
3. Check the following.

- Oil pump assembly. Refer to AT-277, "Oil Pump" .
- Power train system. Refer to AT-259, "DISASSEMBLY" .
- Transmission case. Refer to AT-259, "DISASSEMBLY" .

OK or NG

OK >> GO TO 7.
NG >> Repair or replace damaged parts.

7. CHECK A/T FLUID CONDITION

1. Remove oil pan. Refer to AT-228, "Control Valve With TCM and A/T Fluid Temperature Sensor 2" .
2. Check A/T fluid condition. Refer to AT-54, "Fluid Condition Check" .

OK or NG

OK >> GO TO 8.
NG >> GO TO 11.

8. DETECT MALFUNCTIONING ITEM

- Check the malfunction items. If any items are damaged, repair or replace damaged parts. Refer to AT-65, "Symptom Chart" (Symptom No.10).

OK or NG

OK >> GO TO 9.
NG >> Repair or replace damaged parts.

9. CHECK SYMPTOM

Check again. Refer to AT-59, "Cruise Test - Part 1" , AT-61, "Cruise Test - Part 2" .

OK or NG

OK >> **INSPECTION END**
NG >> GO TO 10.

10. PERFORM TCM INSPECTION

1. Perform TCM input/output signals inspection. Refer to AT-87, "TCM Input/Output Signal Reference Values" .
2. If NG, recheck A/T assembly harness connector terminals for damage or loose connection with harness connector.

OK or NG

OK >> **INSPECTION END**
NG >> Repair or replace damaged parts.

11. DETECT MALFUNCTIONING ITEM

- Check the malfunction items. If any items are damaged, repair or replace damaged parts. Refer to AT-65, "Symptom Chart" (Symptom No.10).

OK or NG

OK >> GO TO 9.
NG >> Repair or replace damaged parts.

A/T Does Not Shift: $D_2 \rightarrow D_3$

ECS00CSU

SYMPTOM:

The vehicle does not shift-up from D_2 to D_3 gear at the specified speed.

DIAGNOSTIC PROCEDURE

1. CONFIRM THE SYMPTOM

Check if vehicle creeps forward in “D” position and vehicle can be started from D_1.

OK or NG

OK >> GO TO 2.
NG >> Refer to AT-187, "Vehicle Does Not Creep Forward In “D” Position" , AT-189, "Vehicle Cannot Be Started From D_1" .

2. CHECK SELF-DIAGNOSTIC RESULTS

Perform self-diagnosis. Refer to AT-90, "SELF-DIAGNOSTIC RESULT MODE" .

Is any malfunction detected by self-diagnostic results?

YES >> Check the malfunctioning system. Refer to AT-90, "SELF-DIAGNOSTIC RESULT MODE" .
NO >> GO TO 3.

3. CHECK A/T FLUID LEVEL

Check A/T fluid level. Refer to AT-13, "Checking the A/T Fluid (ATF)" .

OK or NG

OK >> GO TO 4.
NG >> Refill ATF.

4. CHECK LINE PRESSURE

Check line pressure at the engine stall point. Refer to AT-55, "LINE PRESSURE TEST" .

OK or NG

OK >> GO TO 7.
NG - 1 >> Line pressure high. GO TO 5.
NG - 2 >> Line pressure low. GO TO 6.

5. DETECT MALFUNCTIONING ITEM

1. Check control valve with TCM. Refer to AT-228, "Control Valve With TCM and A/T Fluid Temperature Sensor 2" .
2. Disassemble A/T. Refer to AT-259, "DISASSEMBLY" .
3. Check the following.

– Oil pump assembly. Refer to AT-277, "Oil Pump" .

OK or NG

OK >> GO TO 7.
NG >> Repair or replace damaged parts.

6. DETECT MALFUNCTIONING ITEM

1. Check control valve with TCM. Refer to AT-228, "Control Valve With TCM and A/T Fluid Temperature Sensor 2" .
2. Disassemble A/T. Refer to AT-259, "DISASSEMBLY" .
3. Check the following.

- Oil pump assembly. Refer to AT-277, "Oil Pump" .
- Power train system. Refer to AT-259, "DISASSEMBLY" .
- Transmission case. Refer to AT-259, "DISASSEMBLY" .

OK or NG

OK >> GO TO 7.
NG >> Repair or replace damaged parts.

7. CHECK A/T FLUID CONDITION

1. Remove oil pan. Refer to AT-228, "Control Valve With TCM and A/T Fluid Temperature Sensor 2" .
2. Check A/T fluid condition. Refer to AT-54, "Fluid Condition Check" .

OK or NG

OK >> GO TO 8.
NG >> GO TO 11.

8. DETECT MALFUNCTIONING ITEM

- Check the malfunction items. If any items are damaged, repair or replace damaged parts. Refer to AT-65, "Symptom Chart" (Symptom No.11).

OK or NG

OK >> GO TO 9.
NG >> Repair or replace damaged parts.

9. CHECK SYMPTOM

Check again. Refer to AT-59, "Cruise Test - Part 1" , AT-61, "Cruise Test - Part 2" .

OK or NG

OK >> **INSPECTION END**
NG >> GO TO 10.

10. PERFORM TCM INSPECTION

1. Perform TCM input/output signals inspection. Refer to AT-87, "TCM Input/Output Signal Reference Values" .
2. If NG, recheck A/T assembly harness connector terminals for damage or loose connection with harness connector.

OK or NG

OK >> **INSPECTION END**
NG >> Repair or replace damaged parts.

11. DETECT MALFUNCTIONING ITEM

- Check the malfunction items. If any items are damaged, repair or replace damaged parts. Refer to AT-65, "Symptom Chart" (Symptom No.11).

OK or NG

OK >> GO TO 9.
NG >> Repair or replace damaged parts.

A/T Does Not Shift: $D_3 \rightarrow D_4$

ECS00CSV

SYMPTOM:

- **The vehicle does not shift-up from the D_3 to D_4 gear at the specified speed.**

DIAGNOSTIC PROCEDURE

1. CONFIRM THE SYMPTOM

Check if vehicle creeps forward in “D” position and vehicle can be started from D_1.

OK or NG

OK >> GO TO 2.
NG >> Refer to AT-187, "Vehicle Does Not Creep Forward In “D” Position" , AT-189, "Vehicle Cannot Be Started From D_1" .

2. CHECK SELF-DIAGNOSTIC RESULTS

Perform self-diagnosis. Refer to AT-90, "SELF-DIAGNOSTIC RESULT MODE" .

Is any malfunction detected by self-diagnostic results?

YES >> Check the malfunctioning system. Refer to AT-90, "SELF-DIAGNOSTIC RESULT MODE" .
NO >> GO TO 3.

3. CHECK A/T FLUID LEVEL

Check A/T fluid level. Refer to AT-13, "Checking the A/T Fluid (ATF)" .

OK or NG

OK >> GO TO 4.
NG >> Refill ATF.

4. CHECK LINE PRESSURE

Check line pressure at the engine stall point. Refer to AT-55, "LINE PRESSURE TEST" .

OK or NG

OK >> GO TO 7.
NG - 1 >> Line pressure high. GO TO 5.
NG - 2 >> Line pressure low. GO TO 6.

5. DETECT MALFUNCTIONING ITEM

1. Check control valve with TCM. Refer to AT-228, "Control Valve With TCM and A/T Fluid Temperature Sensor 2" .
2. Disassemble A/T. Refer to AT-259, "DISASSEMBLY" .
3. Check the following.

– Oil pump assembly. Refer to AT-277, "Oil Pump" .

OK or NG

OK >> GO TO 7.
NG >> Repair or replace damaged parts.

6. DETECT MALFUNCTIONING ITEM

1. Check control valve with TCM. Refer to AT-228, "Control Valve With TCM and A/T Fluid Temperature Sensor 2" .
2. Disassemble A/T. Refer to AT-259, "DISASSEMBLY" .
3. Check the following.

- Oil pump assembly. Refer to AT-277, "Oil Pump" .
- Power train system. Refer to AT-259, "DISASSEMBLY" .
- Transmission case. Refer to AT-259, "DISASSEMBLY" .

OK or NG

OK >> GO TO 7.
NG >> Repair or replace damaged parts.

7. CHECK A/T FLUID CONDITION

1. Remove oil pan. Refer to AT-228, "Control Valve With TCM and A/T Fluid Temperature Sensor 2" .
2. Check A/T fluid condition. Refer to AT-54, "Fluid Condition Check" .

OK or NG

OK >> GO TO 8.
NG >> GO TO 11.

8. DETECT MALFUNCTIONING ITEM

- Check the malfunction items. If any items are damaged, repair or replace damaged parts. Refer to AT-65, "Symptom Chart" (Symptom No.12).

OK or NG

OK >> GO TO 9.
NG >> Repair or replace damaged parts.

9. CHECK SYMPTOM

Check again. Refer to AT-59, "Cruise Test - Part 1" , AT-61, "Cruise Test - Part 2" .

OK or NG

OK >> **INSPECTION END**
NG >> GO TO 10.

10. PERFORM TCM INSPECTION

1. Perform TCM input/output signals inspection. Refer to AT-87, "TCM Input/Output Signal Reference Values" .
2. If NG, recheck A/T assembly harness connector terminals for damage or loose connection with harness connector.

OK or NG

OK >> **INSPECTION END**
NG >> Repair or replace damaged parts.

11. DETECT MALFUNCTIONING ITEM

- Check the malfunction items. If any items are damaged, repair or replace damaged parts. Refer to AT-65, "Symptom Chart" (Symptom No.12).

OK or NG

OK >> GO TO 9.
NG >> Repair or replace damaged parts.

A/T Does Not Shift: $D_4 \rightarrow D_5$

ECS00CSW

SYMPTOM:

- **The vehicle does not shift-up from the D_4 to D_5 gear at the specified speed.**
- **The vehicle does not shift-up from the D_4 to D_5 gear unless A/T is warmed up.**

DIAGNOSTIC PROCEDURE

1. CONFIRM THE SYMPTOM

Check if vehicle creeps forward in “D” position and vehicle can be started from D_1.

OK or NG

OK >> GO TO 2.
NG >> Refer to AT-187, "Vehicle Does Not Creep Forward In “D” Position" , AT-189, "Vehicle Cannot Be Started From D_1" .

2. CHECK SELF-DIAGNOSTIC RESULTS

Perform self-diagnosis. Refer to AT-90, "SELF-DIAGNOSTIC RESULT MODE" .

Is any malfunction detected by self-diagnostic results?

YES >> Check the malfunctioning system. Refer to AT-90, "SELF-DIAGNOSTIC RESULT MODE" .
NO >> GO TO 3.

3. CHECK A/T FLUID LEVEL

Check A/T fluid level. Refer to AT-13, "Checking the A/T Fluid (ATF)" .

OK or NG

OK >> GO TO 4.
NG >> Refill ATF.

4. CHECK LINE PRESSURE

Check line pressure at the engine stall point. Refer to AT-55, "LINE PRESSURE TEST" .

OK or NG

OK >> GO TO 7.
NG - 1 >> Line pressure high. GO TO 5.
NG - 2 >> Line pressure low. GO TO 6.

5. DETECT MALFUNCTIONING ITEM

1. Check control valve with TCM. Refer to AT-228, "Control Valve With TCM and A/T Fluid Temperature Sensor 2" .
2. Disassemble A/T. Refer to AT-259, "DISASSEMBLY" .
3. Check the following.

– Oil pump assembly. Refer to AT-277, "Oil Pump" .

OK or NG

OK >> GO TO 7.
NG >> Repair or replace damaged parts.

6. DETECT MALFUNCTIONING ITEM

1. Check control valve with TCM. Refer to AT-228, "Control Valve With TCM and A/T Fluid Temperature Sensor 2" .
2. Disassemble A/T. Refer to AT-259, "DISASSEMBLY" .
3. Check the following.

- Oil pump assembly. Refer to AT-277, "Oil Pump" .
- Power train system. Refer to AT-259, "DISASSEMBLY" .
- Transmission case. Refer to AT-259, "DISASSEMBLY" .

OK or NG

OK >> GO TO 7.
NG >> Repair or replace damaged parts.

7. CHECK A/T FLUID CONDITION

1. Remove oil pan. Refer to AT-228, "Control Valve With TCM and A/T Fluid Temperature Sensor 2" .
2. Check A/T fluid condition. Refer to AT-54, "Fluid Condition Check" .

OK or NG

OK >> GO TO 8.
NG >> GO TO 11.

8. DETECT MALFUNCTIONING ITEM

- Check the malfunction items. If any items are damaged, repair or replace damaged parts. Refer to AT-65, "Symptom Chart" (Symptom No.13).

OK or NG

OK >> GO TO 9.
NG >> Repair or replace damaged parts.

9. CHECK SYMPTOM

Check again. Refer to AT-59, "Cruise Test - Part 1" .

OK or NG

OK >> **INSPECTION END**
NG >> GO TO 10.

10. PERFORM TCM INSPECTION

1. Perform TCM input/output signals inspection. Refer to AT-87, "TCM Input/Output Signal Reference Values" .
2. If NG, recheck A/T assembly harness connector terminals for damage or loose connection with harness connector.

OK or NG

OK >> **INSPECTION END**
NG >> Repair or replace damaged parts.

11. DETECT MALFUNCTIONING ITEM

- Check the malfunction items. If any items are damaged, repair or replace damaged parts. Refer to AT-65, "Symptom Chart" (Symptom No.13).

OK or NG

OK >> GO TO 9.
NG >> Repair or replace damaged parts.

A/T Does Not Perform Lock-up

ECS00CSX

SYMPTOM:

A/T does not perform lock-up at the specified speed.

DIAGNOSTIC PROCEDURE

1. CHECK SELF-DIAGNOSTIC RESULTS

Perform self-diagnosis. Refer to AT-90, "SELF-DIAGNOSTIC RESULT MODE" .

Is any malfunction detected by self-diagnostic results?

YES >> Check the malfunctioning system. Refer to AT-90, "SELF-DIAGNOSTIC RESULT MODE" .
NO >> GO TO 2.

2. CHECK A/T FLUID LEVEL

Check A/T fluid level. Refer to AT-13, "Checking the A/T Fluid (ATF)" .

OK or NG

OK >> GO TO 3.
NG >> Refill ATF.

3. CHECK LINE PRESSURE

Check line pressure at the engine stall point. Refer to AT-55, "LINE PRESSURE TEST" .

OK or NG

OK >> GO TO 6.
NG - 1 >> Line pressure high. GO TO 4.
NG - 2 >> Line pressure low. GO TO 5.

4. DETECT MALFUNCTIONING ITEM

1. Check control valve with TCM. Refer to AT-228, "Control Valve With TCM and A/T Fluid Temperature Sensor 2" .
2. Disassemble A/T. Refer to AT-259, "DISASSEMBLY" .
3. Check the following.

– Oil pump assembly. Refer to AT-277, "Oil Pump" .

OK or NG

OK >> GO TO 7.
NG >> Repair or replace damaged parts.

5. DETECT MALFUNCTIONING ITEM

1. Check control valve with TCM. Refer to AT-228, "Control Valve With TCM and A/T Fluid Temperature Sensor 2" .
2. Disassemble A/T. Refer to AT-259, "DISASSEMBLY" .
3. Check the following.

– Oil pump assembly. Refer to AT-277, "Oil Pump" .
– Power train system. Refer to AT-259, "DISASSEMBLY" .
– Transmission case. Refer to AT-259, "DISASSEMBLY" .

OK or NG

OK >> GO TO 7.
NG >> Repair or replace damaged parts.

6. CHECK A/T FLUID CONDITION

1. Remove oil pan. Refer to AT-228, "Control Valve With TCM and A/T Fluid Temperature Sensor 2" .
2. Check A/T fluid condition. Refer to AT-54, "Fluid Condition Check" .

OK or NG

OK >> GO TO 7.
NG >> GO TO 10.

7. DETECT MALFUNCTIONING ITEM

- Check the malfunction items. If any items are damaged, repair or replace damaged parts. Refer to AT-65, "Symptom Chart" (Symptom No.24).

OK or NG

OK >> GO TO 8.
NG >> Repair or replace damaged parts.

8. CHECK SYMPTOM

Check again. Refer to AT-59, "Cruise Test - Part 1" .

OK or NG

OK >> **INSPECTION END**
NG >> GO TO 9.

9. PERFORM TCM INSPECTION

1. Perform TCM input/output signals inspection. Refer to AT-87, "TCM Input/Output Signal Reference Values" .
2. If NG, recheck A/T assembly harness connector terminals for damage or loose connection with harness connector.

OK or NG

OK >> **INSPECTION END**
NG >> Repair or replace damaged parts.

10. DETECT MALFUNCTIONING ITEM

- Check the malfunction items. If any items are damaged, repair or replace damaged parts. Refer to AT-65, "Symptom Chart" (Symptom No.24).

OK or NG

OK >> GO TO 8.
NG >> Repair or replace damaged parts.

A/T Does Not Hold Lock-up Condition

ECS00CSY

SYMPTOM:

The lock-up condition cannot be maintained for more than 30 seconds.

DIAGNOSTIC PROCEDURE

1. CHECK SELF-DIAGNOSTIC RESULTS

Perform self-diagnosis. Refer to AT-90, "SELF-DIAGNOSTIC RESULT MODE" .

Is any malfunction detected by self-diagnostic results?

YES >> Check the malfunctioning system. Refer to AT-90, "SELF-DIAGNOSTIC RESULT MODE" .
NO >> GO TO 2.

2. CHECK A/T FLUID LEVEL

Check A/T fluid level. Refer to AT-13, "Checking the A/T Fluid (ATF)" .

OK or NG

OK >> GO TO 3.
NG >> Refill ATF.

3. CHECK A/T FLUID CONDITION

1. Remove oil pan. Refer to AT-228, "Control Valve With TCM and A/T Fluid Temperature Sensor 2" .
2. Check A/T fluid condition. Refer to AT-54, "Fluid Condition Check" .

OK or NG

OK >> GO TO 4.
NG >> GO TO 7.

4. DETECT MALFUNCTIONING ITEM

- Check the malfunction items. If any items are damaged, repair or replace damaged parts. Refer to AT-65, "Symptom Chart" (Symptom No.25).

OK or NG

OK >> GO TO 5.
NG >> Repair or replace damaged parts.

5. CHECK SYMPTOM

Check again. Refer to AT-59, "Cruise Test - Part 1" .

OK or NG

OK >> **INSPECTION END**
NG >> GO TO 6.

6. PERFORM TCM INSPECTION

1. Perform TCM input/output signals inspection. Refer to AT-87, "TCM Input/Output Signal Reference Values" .
2. If NG, recheck A/T assembly harness connector terminals for damage or loose connection with harness connector.

OK or NG

OK >> **INSPECTION END**
NG >> Repair or replace damaged parts.

7. DETECT MALFUNCTIONING ITEM

- Check the malfunction items. If any items are damaged, repair or replace damaged parts. Refer to AT-65, "Symptom Chart" (Symptom No.25).

OK or NG

OK >> GO TO 5.
NG >> Repair or replace damaged parts.

Lock-up Is Not Released

ECS00CSZ

SYMPTOM:

The lock-up condition cannot be cancelled even after releasing the accelerator pedal.

DIAGNOSTIC PROCEDURE

1. CHECK SELF-DIAGNOSTIC RESULTS

Perform self-diagnosis. Refer to AT-90, "SELF-DIAGNOSTIC RESULT MODE" .

Is any malfunction detected by self-diagnostic results?

YES >> Check the malfunctioning system. Refer to AT-90, "SELF-DIAGNOSTIC RESULT MODE" .
NO >> GO TO 2.

2. CHECK SYMPTOM

Check again. Refer to AT-59, "Cruise Test - Part 1" .

OK or NG

OK >> **INSPECTION END**
NG >> GO TO 3.

3. PERFORM TCM INSPECTION

1. Perform TCM input/output signals inspection. Refer to AT-87, "TCM Input/Output Signal Reference Values" .
2. If NG, recheck A/T assembly harness connector terminals for damage or loose connection with harness connector.

OK or NG

OK >> **INSPECTION END**
NG >> Repair or replace damaged parts.

Engine Speed Does Not Return to Idle

ECS00CT0

SYMPTOM:

When a shift-down is performed, the engine speed does not smoothly return to the idling speed.

DIAGNOSTIC PROCEDURE

1. CHECK A/T FLUID LEVEL

Check A/T fluid level. Refer to AT-13, "Checking the A/T Fluid (ATF)" .

OK or NG

OK >> GO TO 2.
NG >> Refill ATF.

2. CHECK SELF-DIAGNOSTIC RESULTS

Perform self-diagnosis. Refer to AT-90, "SELF-DIAGNOSTIC RESULT MODE" .

Is any malfunction detected by self-diagnostic results?

YES >> Check the malfunctioning system. Refer to AT-90, "SELF-DIAGNOSTIC RESULT MODE" .
NO >> GO TO 3.

3. CHECK A/T FLUID CONDITION

1. Remove oil pan. Refer to AT-228, "Control Valve With TCM and A/T Fluid Temperature Sensor 2" .
2. Check A/T fluid condition. Refer to AT-54, "Fluid Condition Check" .

OK or NG

OK >> GO TO 4.
NG >> GO TO 7.

4. DETECT MALFUNCTIONING ITEM

- Check the malfunction items. If any items are damaged, repair or replace damaged parts. Refer to AT-65, "Symptom Chart" (Symptom No.65).

OK or NG

OK >> GO TO 5.
NG >> Repair or replace damaged parts.

5. CHECK SYMPTOM

Check again. Refer to AT-59, "Cruise Test - Part 1" .

OK or NG

OK >> **INSPECTION END**
NG >> GO TO 6.

6. PERFORM TCM INSPECTION

1. Perform TCM input/output signals inspection. Refer to AT-87, "TCM Input/Output Signal Reference Values" .
2. If NG, recheck A/T assembly harness connector terminals for damage or loose connection with harness connector.

OK or NG

OK >> **INSPECTION END**
NG >> Repair or replace damaged parts.

7. DETECT MALFUNCTIONING ITEM

- Check the malfunction items. If any items are damaged, repair or replace damaged parts. Refer to AT-65, "Symptom Chart" (Symptom No.65).

OK or NG

OK >> GO TO 5.
NG >> Repair or replace damaged parts.

A/T Does Not Shift: 5th gear → 4th gear

ECS00CT1

SYMPTOM:

When shifted from D5 to D4 position, does not downshift from 5th to 4th gears.

DIAGNOSTIC PROCEDURE

1. CHECK SELF-DIAGNOSIS RESULTS

Perform self-diagnosis. Refer to AT-90, "SELF-DIAGNOSTIC RESULT MODE" .

Is any malfunction detected by self-diagnostic results?

YES >> Check the malfunctioning system. Refer to AT-90, "SELF-DIAGNOSTIC RESULT MODE" .
NO >> GO TO 2.

2. CHECK OVERDRIVE CONTROL SWITCH CIRCUIT

Check overdrive control switch. Refer to AT-174, "OVERDRIVE CONTROL SWITCH" .

OK or NG

OK >> GO TO 3.
NG >> Repair or replace damaged parts.

3. CHECK A/T FLUID LEVEL

Check the A/T fluid level. Refer to AT-13, "Checking the A/T Fluid (ATF)" .

OK or NG

OK >> GO TO 4.
NG >> Refill ATF.

4. CHECK CONTROL CABLE

Check the control cable.

- Refer to AT-217, "Checking of A/T Position" .

OK or NG

OK >> GO TO 5.
NG >> Adjust control cable. Refer to AT-217, "Adjustment of A/T Position" .

5. CHECK A/T FLUID CONDITION

1. Remove oil pan. Refer to AT-228, "Control Valve With TCM and A/T Fluid Temperature Sensor 2" .
2. Check A/T fluid condition. Refer to AT-54, "Fluid Condition Check" .

OK or NG

OK >> GO TO 6.
NG >> GO TO 9.

6. DETECT MALFUNCTIONING ITEM

- Check the malfunction items. If any items are damaged, repair or replace damaged parts. Refer to AT-65, "Symptom Chart" (Symptom No.14).

OK or NG

OK >> GO TO 7.
NG >> Repair or replace damaged parts.

7. CHECK SYMPTOM

Check again. Refer to AT-62, "Cruise Test - Part 3" .

OK or NG

OK >> **INSPECTION END**
NG >> GO TO 8.

8. PERFORM TCM INSPECTION

1. Perform TCM input/output signals inspection. Refer to AT-87, "TCM Input/Output Signal Reference Values" .
2. If NG, recheck A/T assembly harness connector terminals for damage or loose connection with harness connector.

OK or NG

OK >> **INSPECTION END**
NG >> Repair or replace damaged parts.

9. DETECT MALFUNCTIONING ITEM

- Check the malfunction items. If any items are damaged, repair or replace damaged parts. Refer to AT-65, "Symptom Chart" (Symptom No.14).

OK or NG

OK >> GO TO 7.
NG >> Repair or replace damaged parts.

A/T Does Not Shift: 4th gear → 3rd gear

ECS00CT2

SYMPTOM:

When shifted from D4 to 33 position, does not downshift from 4th to 3rd gears.

DIAGNOSTIC PROCEDURE

1. CHECK SELF-DIAGNOSIS RESULTS

Perform self-diagnosis. Refer to AT-90, "SELF-DIAGNOSTIC RESULT MODE" .

Is any malfunction detected by self-diagnostic results?

YES >> Check the malfunctioning system. Refer to AT-90, "SELF-DIAGNOSTIC RESULT MODE" .
NO >> GO TO 2.

2. CHECK A/T FLUID LEVEL

Check the A/T fluid level. Refer to AT-13, "Checking the A/T Fluid (ATF)" .

OK or NG

OK >> GO TO 3.
NG >> Refill ATF.

3. CHECK CONTROL CABLE

Check the control cable.

- Refer to AT-217, "Checking of A/T Position" .

OK or NG

OK >> GO TO 4.
NG >> Adjust control cable. Refer to AT-217, "Adjustment of A/T Position" .

4. CHECK A/T FLUID CONDITION

1. Remove oil pan. Refer to AT-228, "Control Valve With TCM and A/T Fluid Temperature Sensor 2" .
2. Check A/T fluid condition. Refer to AT-54, "Fluid Condition Check" .

OK or NG

OK >> GO TO 5.
NG >> GO TO 8.

5. DETECT MALFUNCTIONING ITEM

- Check the malfunction items. If any items are damaged, repair or replace damaged parts. Refer to AT-65, "Symptom Chart" (Symptom No.15).

OK or NG

OK >> GO TO 6.
NG >> Repair or replace damaged parts.

6. CHECK SYMPTOM

Check again. Refer to AT-62, "Cruise Test - Part 3" .

OK or NG

OK >> **INSPECTION END**
NG >> GO TO 7.

7. PERFORM TCM INSPECTION

1. Perform TCM input/output signals inspection. Refer to AT-87, "TCM Input/Output Signal Reference Values" .
2. If NG, recheck A/T assembly harness connector terminals for damage or loose connection with harness connector.

OK or NG

OK >> **INSPECTION END**
NG >> Repair or replace damaged parts.

8. DETECT MALFUNCTIONING ITEM

- Check the malfunction items. If any items are damaged, repair or replace damaged parts. Refer to AT-65, "Symptom Chart" (Symptom No.15).

OK or NG

OK >> GO TO 6.
NG >> Repair or replace damaged parts.

A/T Does Not Shift: 3rd gear → 2nd gear

ECS00CT3

SYMPTOM:

When shifted from 3$_3$ to 2$_2$ position, does not downshift from 3rd to 2nd gears.

DIAGNOSTIC PROCEDURE

1. CHECK SELF-DIAGNOSIS RESULTS

Perform self-diagnosis. Refer to AT-90, "SELF-DIAGNOSTIC RESULT MODE" .

Is any malfunction detected by self-diagnostic results?

YES >> Check the malfunctioning system. Refer to AT-90, "SELF-DIAGNOSTIC RESULT MODE" .
NO >> GO TO 2.

2. CHECK A/T FLUID LEVEL

Check the A/T fluid level. Refer to AT-13, "Checking the A/T Fluid (ATF)" .

OK or NG

OK >> GO TO 3.
NG >> Refill ATF.

3. CHECK CONTROL CABLE

Check the control cable.

- Refer to AT-217, "Checking of A/T Position" .

OK or NG

OK >> GO TO 4.
NG >> Adjust control cable. Refer to AT-217, "Adjustment of A/T Position" .

4. CHECK A/T FLUID CONDITION

1. Remove oil pan. Refer to AT-228, "Control Valve With TCM and A/T Fluid Temperature Sensor 2" .
2. Check A/T fluid condition. Refer to AT-54, "Fluid Condition Check" .

OK or NG

OK >> GO TO 5.
NG >> GO TO 8.

5. DETECT MALFUNCTIONING ITEM

- Check the malfunction items. If any items are damaged, repair or replace damaged parts. Refer to AT-65, "Symptom Chart" (Symptom No.16).

OK or NG

OK >> GO TO 6.
NG >> Repair or replace damaged parts.

6. CHECK SYMPTOM

Check again. Refer to AT-62, "Cruise Test - Part 3" .

OK or NG

OK >> **INSPECTION END**
NG >> GO TO 7.

7. PERFORM TCM INSPECTION

1. Perform TCM input/output signals inspection. Refer to AT-87, "TCM Input/Output Signal Reference Values" .
2. If NG, recheck A/T assembly harness connector terminals for damage or loose connection with harness connector.

OK or NG

OK >> **INSPECTION END**
NG >> Repair or replace damaged parts.

8. DETECT MALFUNCTIONING ITEM

- Check the malfunction items. If any items are damaged, repair or replace damaged parts. Refer to AT-65, "Symptom Chart" (Symptom No.16).

OK or NG

OK >> GO TO 6.
NG >> Repair or replace damaged parts.

A/T Does Not Shift: 2nd gear → 1st gear

ECS00CT4

SYMPTOM:

When shifted from 2$_2$ to 1$_1$ position, does not downshift from 2nd to 1st gears.

DIAGNOSTIC PROCEDURE

1. CHECK SELF-DIAGNOSIS RESULTS

Perform self-diagnosis. Refer to AT-90, "SELF-DIAGNOSTIC RESULT MODE" .

Is any malfunction detected by self-diagnostic results?

YES >> Check the malfunctioning system. Refer to AT-90, "SELF-DIAGNOSTIC RESULT MODE" .
NO >> GO TO 2.

2. CHECK 1ST POSITION SWITCH CIRCUIT

With CONSULT-II

1. Turn ignition switch “ON”.
2. Select “ECU INPUT SIGNALS” in “DATA MONITOR” mode for “A/T” with CONSULT-II.
3. Read out “1 POSITION SW” switch moving selector lever to each position.

Monitor item	Condition	Display value
1 POSITION SW	When setting the selector lever to “1” position.	ON
	When setting selector lever to other positions.	OFF

DATA MONITOR	
MONITORING	
1 POSITION SW	OFF
OD CONT SW	ON
POWERSHIFT SW	OFF
HOLD SW	OFF
MANU MODE SW	OFF

LCIA0339E

Without CONSULT-II

1. Turn ignition switch “ON”. (Do not start engine)
2. Check voltage between A/T device harness connector terminal and ground.

Item	Connector No.	Terminal No.	Condition	Data (Approx.)
1st position switch	M156	9 - Ground	When setting the selector lever to “1” position.	0V
			When setting selector lever to other positions.	Battery voltage

OK or NG

OK >> GO TO 3.
NG >> Repair or replace damaged parts.

3. CHECK A/T FLUID LEVEL

Check the A/T fluid level. Refer to AT-13, "Checking the A/T Fluid (ATF)" .

OK or NG

OK >> GO TO 4.
NG >> Refill ATF.

4. CHECK CONTROL CABLE

Check the control cable.

- Refer to AT-217, "Checking of A/T Position" .

OK or NG

OK >> GO TO 5.
NG >> Adjust control cable. Refer to AT-217, "Adjustment of A/T Position" .

5. CHECK A/T FLUID CONDITION

1. Remove oil pan. Refer to AT-228, "Control Valve With TCM and A/T Fluid Temperature Sensor 2" .
2. Check A/T fluid condition. Refer to AT-54, "Fluid Condition Check" .

OK or NG

OK >> GO TO 6.
NG >> GO TO 9.

6. DETECT MALFUNCTIONING ITEM

- Check the malfunction items. If any items are damaged, repair or replace damaged parts. Refer to AT-65, "Symptom Chart" (Symptom No.17).

OK or NG

OK >> GO TO 7.
NG >> Repair or replace damaged parts.

7. CHECK SYMPTOM

Check again. Refer to AT-62, "Cruise Test - Part 3" .

OK or NG

OK >> **INSPECTION END**
NG >> GO TO 8.

8. PERFORM TCM INSPECTION

1. Perform TCM input/output signals inspection. Refer to AT-87, "TCM Input/Output Signal Reference Values" .
2. If NG, recheck A/T assembly harness connector terminals for damage or loose connection with harness connector.

OK or NG

OK >> **INSPECTION END**
NG >> Repair or replace damaged parts.

9. DETECT MALFUNCTIONING ITEM

- Check the malfunction items. If any items are damaged, repair or replace damaged parts. Refer to AT-65, "Symptom Chart" (Symptom No.17).

OK or NG

OK >> GO TO 7.
NG >> Repair or replace damaged parts.

Vehicle Does Not Decelerate By Engine Brake

ECS00CT5

SYMPTOM:

No engine brake is applied when the gear is shifted from the 2$_2$ to 1$_1$.

DIAGNOSTIC PROCEDURE

1. CHECK SELF-DIAGNOSIS RESULTS

Perform self-diagnosis.

Is any malfunction detected by self-diagnostic results?

YES >> Check the malfunctioning system. Refer to AT-90, "SELF-DIAGNOSTIC RESULT MODE" .
NO >> GO TO 2.

2. CHECK 1ST POSITION SWITCH CIRCUIT

With CONSULT-II

1. Turn ignition switch “ON”.
2. Select “ECU INPUT SIGNALS” in “DATA MONITOR” mode for “A/T” with CONSULT-II.
3. Read out “1 POSITION SW” moving switch selector lever to each position.

Monitor item	Condition	Display value
1 POSITION SW	When setting the selector lever to “1” position.	ON
	When setting selector lever to other positions.	OFF

DATA MONITOR	
MONITORING	
1 POSITION SW	OFF
OD CONT SW	ON
POWERSHIFT SW	OFF
HOLD SW	OFF
MANU MODE SW	OFF

LCIA0339E

Without CONSULT-II

1. Turn ignition switch “ON”. (Do not start engine)
2. Check voltage between A/T device harness connector terminal and ground.

Item	Connector No.	Terminal No.	Condition	Data (Approx.)
1st position switch	M156	9 - Ground	When setting the selector lever to “1” position.	0V
			When setting selector lever to other positions.	Battery voltage

OK or NG

OK >> GO TO 3.
NG >> Repair or replace damaged parts.

3. CHECK A/T FLUID LEVEL

Check the A/T fluid level. Refer to AT-13, "Checking the A/T Fluid (ATF)" .

OK or NG

OK >> GO TO 4.
NG >> Refill ATF.

4. CHECK CONTROL CABLE

Check the control cable.

- Refer to AT-217, "Checking of A/T Position" .

OK or NG

OK >> GO TO 5.
NG >> Adjust control cable. Refer to AT-217, "Adjustment of A/T Position" .

5. CHECK A/T FLUID CONDITION

1. Remove oil pan. Refer to AT-228, "Control Valve With TCM and A/T Fluid Temperature Sensor 2" .
2. Check A/T fluid condition. Refer to AT-54, "Fluid Condition Check" .

OK or NG

OK >> GO TO 6.
NG >> GO TO 9.

6. DETECT MALFUNCTIONING ITEM

- Check the malfunction items. If any items are damaged, repair or replace damaged parts. Refer to AT-65, "Symptom Chart" (Symptom No.53).

OK or NG

OK >> GO TO 7.
NG >> Repair or replace damaged parts.

7. CHECK SYMPTOM

Check again. Refer to AT-62, "Cruise Test - Part 3" .

OK or NG

OK >> **INSPECTION END**
NG >> GO TO 8.

8. PERFORM TCM INSPECTION

1. Perform TCM input/output signals inspection. Refer to AT-87, "TCM Input/Output Signal Reference Values" .
2. If NG, recheck A/T assembly harness connector terminals for damage or loose connection with harness connector.

OK or NG

OK >> **INSPECTION END**
NG >> Repair or replace damaged parts.

9. DETECT MALFUNCTIONING ITEM

- Check the malfunction items. If any items are damaged, repair or replace damaged parts. Refer to AT-65, "Symptom Chart" (Symptom No.53).

OK or NG

OK >> GO TO 7.
NG >> Repair or replace damaged parts.

SHIFT CONTROL SYSTEM

PFP:34901

Control Device Removal and Installation

ECS00CT6

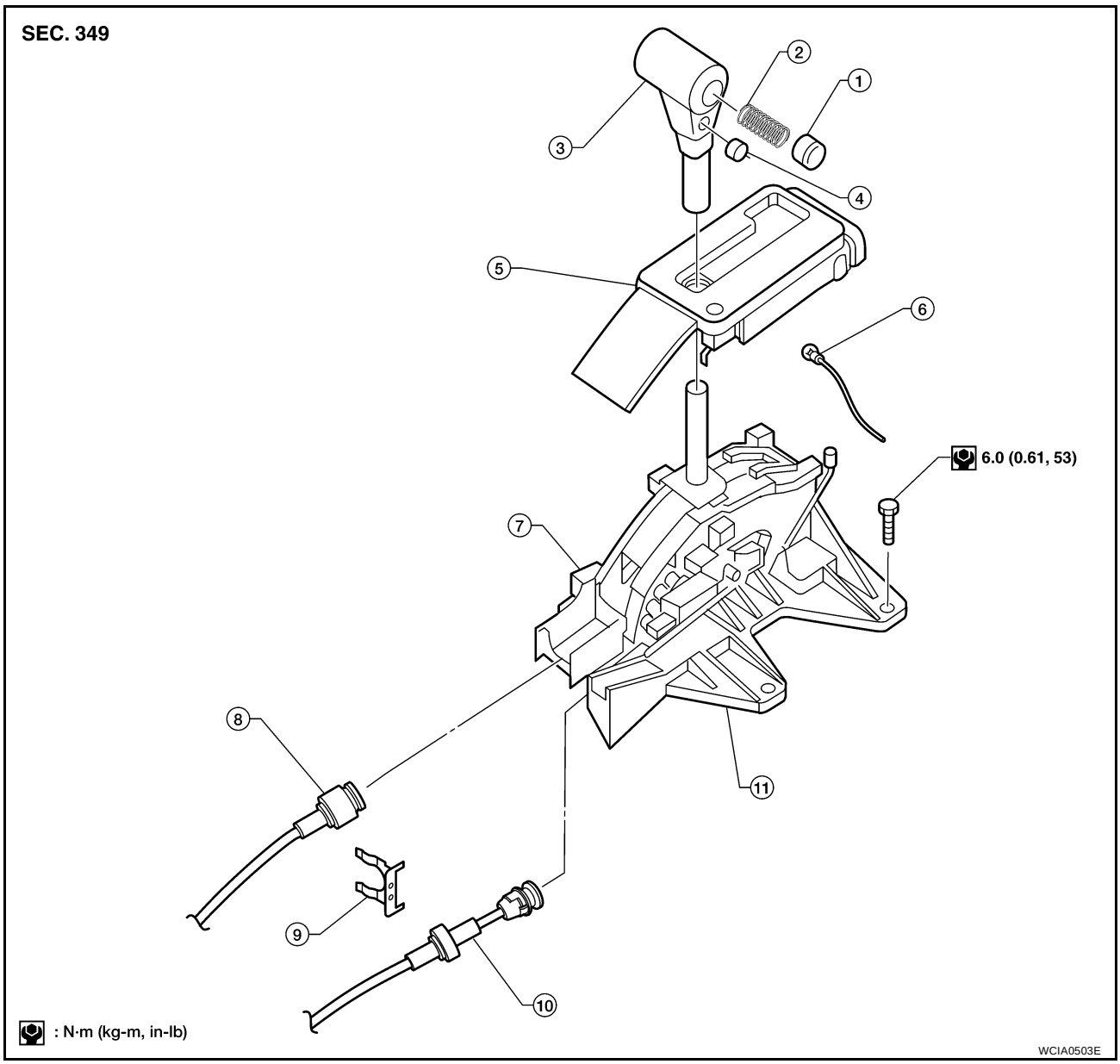

1.	Selector button	2.	Selector spring	3.	Selector lever
4.	Overdrive control switch	5.	Position indicator	6.	Position lamp
7.	A/T device harness connector	8.	A/T selector control cable	9.	Lock plate
10.	Key interlock cable	11.	A/T control device assembly		

REMOVAL

1. Remove the A/T finisher. Refer to IP-13, "A/T FINISHER" .
2. Disconnect the following from the A/T control device assembly.
   - A/T selector control cable
   - A/T key interlock cable
   - A/T device connector
3. Remove the A/T control device assembly.

INSTALLATION

Installation is in reverse order of removal.

Adjustment of A/T Position

ECS00CT7

1. Loosen nut of control cable.
2. Place the manual lever and selector lever in “P” position.
3. Push the control cable in the direction shown with a force of 9.8 N (1kg, 2.2 lb), release it. This is in the natural state, tighten control cable nut to specifications.

Control cable nut : 14.5 N·m (1.5 kg-m, 11 ft-lb)

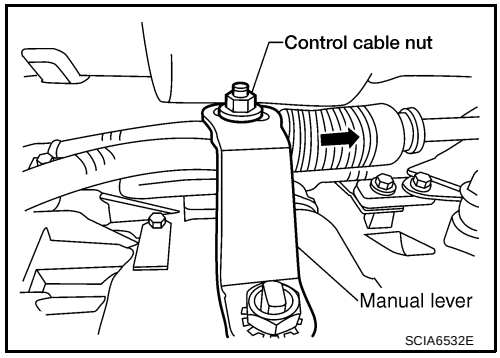

Checking of A/T Position

ECS00CT8

With the selector lever in the “P” position, turn the ignition switch to the ON position with the engine OFF. Confirm that the following conditions apply.

- The selector lever can be shifted from the “P” position when the brake pedal is depressed.
- The selector lever stops at each position with the feel of engagement when it is moved through all the positions.
- There is no excessive effort, sticking, noise or rattle.
- The actual position of the selector lever matches the position shown by the shift position indicator and the A/T body.
- The back-up lamps illuminate only when the selector lever is placed in the “R” position.
- The back-up lamps do not illuminate when the selector lever is pushed against the “R” position when in the “P” or “N” position.
- The engine can only be started with the selector lever in the “P” and “N” positions.
- The A/T is locked completely when in the “P” position.

A/T SHIFT LOCK SYSTEM

PFP:34950

Description

ECS00CT9

- The mechanical key interlock mechanism also operates as a shift lock:
  With the ignition switch turned to ON, the selector lever cannot be shifted from “P” (parking) to any other position unless the brake pedal is depressed.
  With the key removed, the selector lever cannot be shifted from “P” to any other position.
  The key cannot be removed unless the selector lever is placed in “P” position.
- The shift lock and key interlock mechanisms are controlled by the ON-OFF operation of the shift lock solenoid and by the operation of the rotator and slider located inside the key cylinder, respectively.

Shift Lock System Electrical Parts Location

ECS00CTA

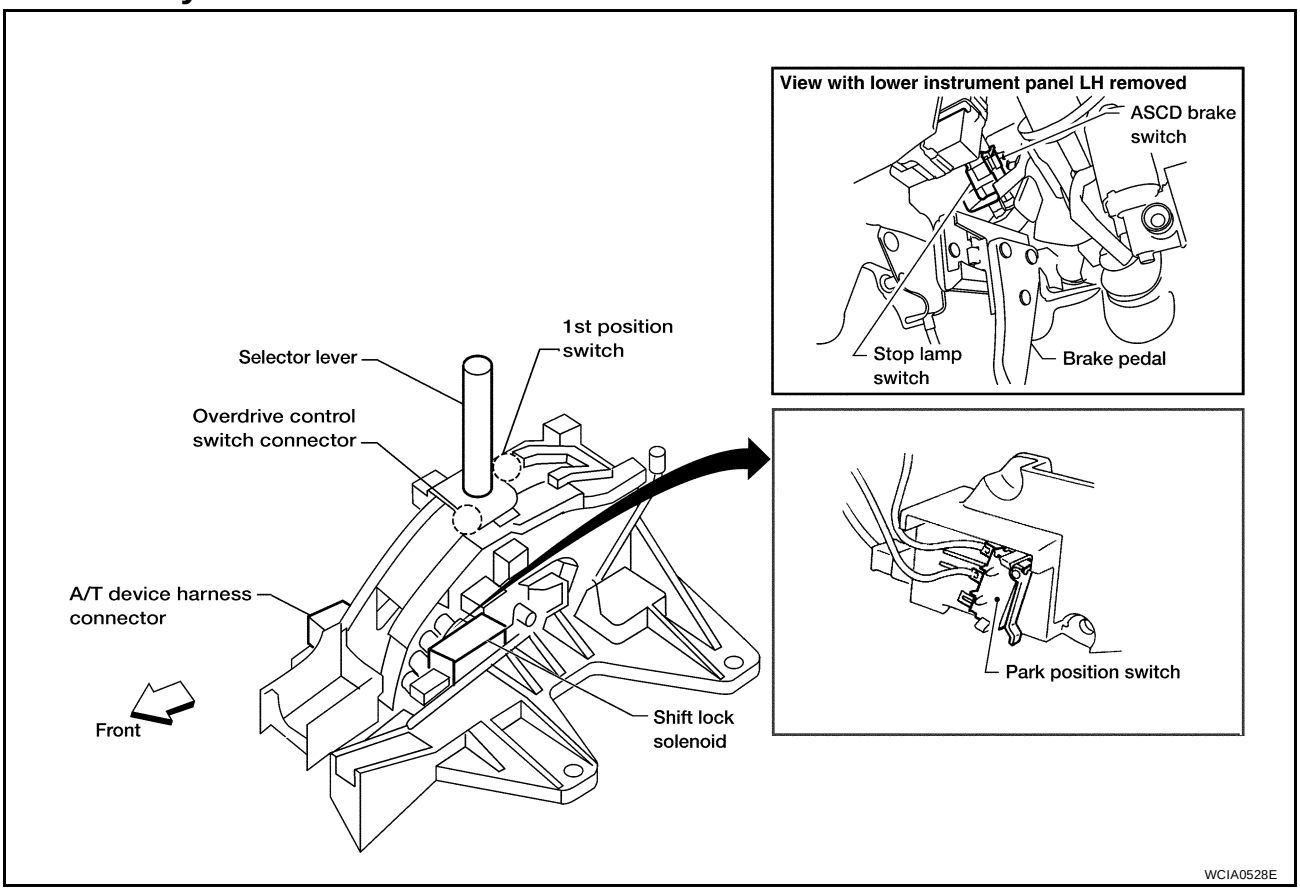

Wiring Diagram — A/T — SHIFT

ECS00CTB

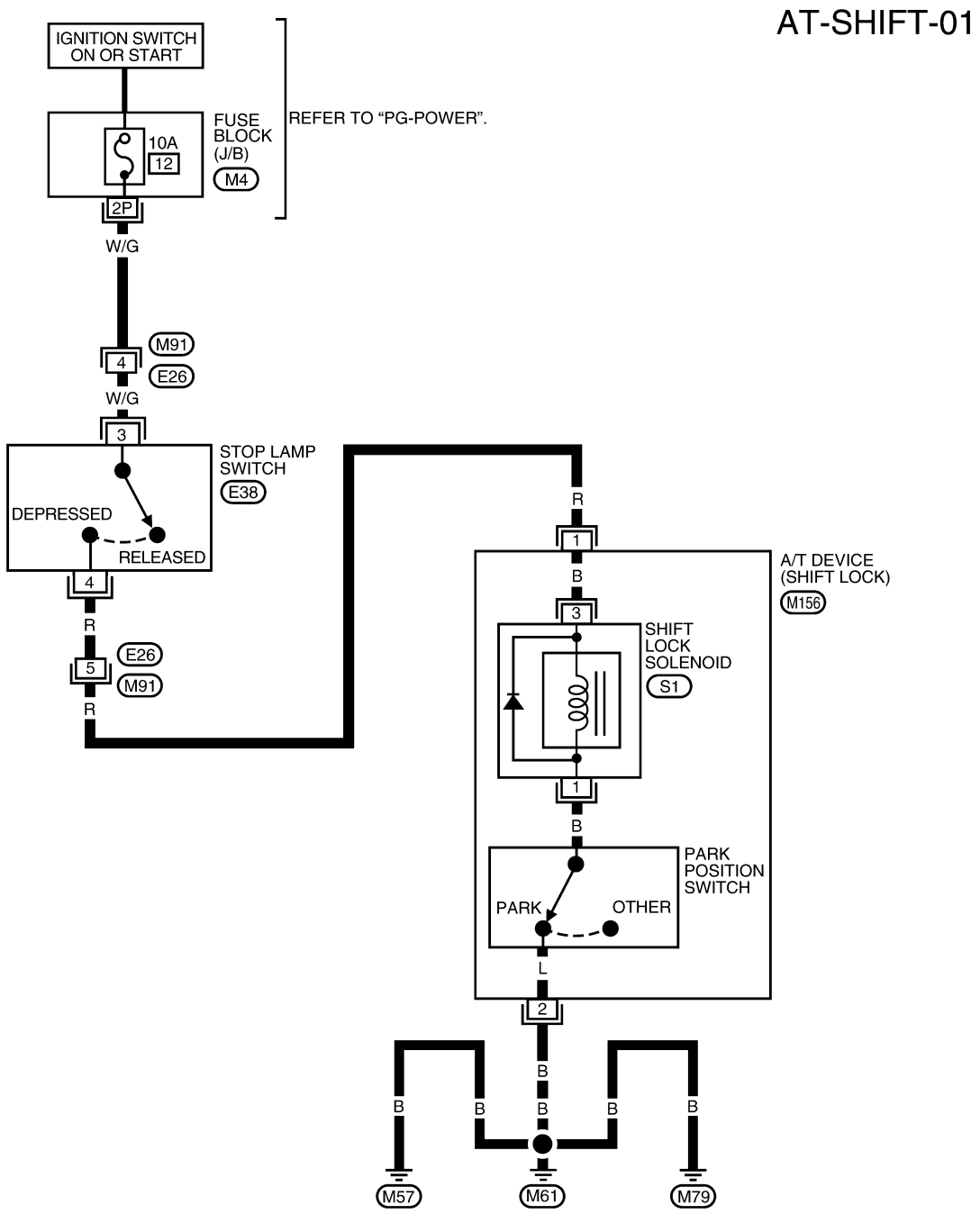

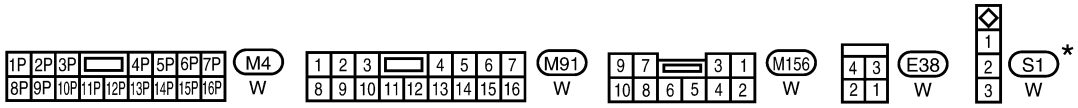

*: THIS CONNECTOR IS NOT SHOWN IN “HARNESS LAYOUT” OF PG SECTION.

BCWA0713E

Diagnostic Procedure

ECS00CTC

SYMPTOM 1:

- **Selector lever cannot be moved from “P” position with key in ON position and brake pedal applied.**
- **Selector lever can be moved from “P” position with key in ON position and brake pedal released.**
- **Selector lever can be moved from “P” position when key is removed from key cylinder.**

SYMPTOM 2:

- **Ignition key cannot be removed when selector lever is set to “P” position.**
- **Ignition key can be removed when selector lever is set to any position except “P”.**

1. CHECK KEY INTERLOCK CABLE

Check key interlock cable for damage.

OK or NG

OK >> GO TO 2.
NG >> Repair key interlock cable. Refer to AT-223, "KEY INTERLOCK CABLE" .

2. CHECK SELECTOR LEVER POSITION

Check selector lever position for damage. Refer to AT-217, "Checking of A/T Position" .

OK or NG

OK >> GO TO 3.
NG >> Check selector lever. Refer to AT-217, "Adjustment of A/T Position" .

3. CHECK INPUT SIGNAL A/T DEVICE

1. Turn ignition switch “OFF”.
2. Disconnect A/T device harness connector.
3. Turn ignition switch ON.
4. Check voltage between A/T device harness connector M156 terminal 1 and ground.

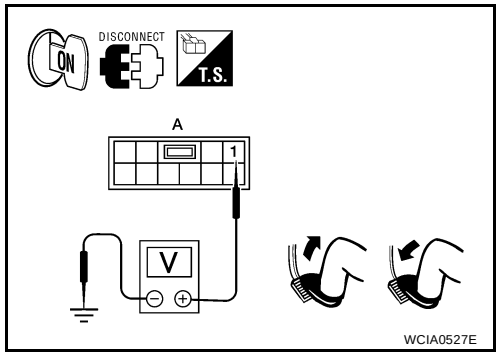

Terminals			Condition	Voltage (Approx.)
A				
A/T device connector	Terminal	(-)		
M156	1	Ground	Depressed brake pedal	Battery voltage
M156	1	Ground	Released brake pedal	0V

OK or NG

OK >> GO TO 5.
NG >> GO TO 4.

4. DETECT MALFUNCTIONING ITEM

Check the following.

1. Harness for short or open between ignition switch and stop lamp switch harness connector E38 terminal 3.
2. Harness for short or open between stop lamp switch harness connector E38 terminal 4 and A/T device harness connector M156 terminal 1.
3. 10A fuse. [No.12, located in the fuse block (J/B)]
4. Stop lamp switch.

– Check continuity between stop lamp switch harness connector E38 terminals 3 and 4.

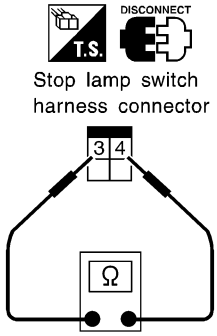

Condition	Continuity
When brake pedal is depressed	Yes
When brake pedal is released	No

SCIA3953E

Check stop lamp switch after adjusting brake pedal — refer to BR-6, "BRAKE PEDAL" .

OK or NG

OK >> GO TO 5.
NG >> Repair or replace damaged parts.

5. CHECK GROUND CIRCUIT

1. Turn ignition switch OFF.
2. Disconnect A/T device harness connector.
3. Check continuity between A/T device harness connector M156 terminal 2 and ground.

Continuity should exist.

If OK, check harness for short to ground and short to power.

OK or NG

OK >> GO TO 6.
NG >> Repair open circuit or short to ground or short to power in harness or connectors.

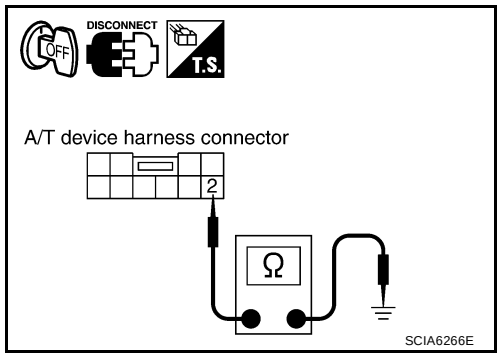

SCIA6266E

6. CHECK PARK POSITION SWITCH AND SHIFT LOCK SOLENOID CIRCUIT

Check continuity between A/T device harness connector M156 terminals 1 and 2.

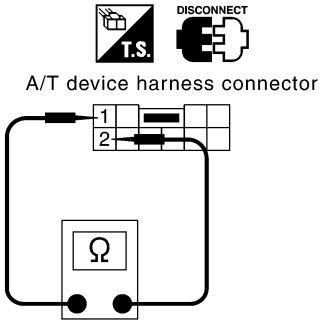

Condition	Continuity
When selector lever is set in "P" position and selector lever button is released	Yes
Except above	No

SCIA6267E

OK or NG

OK >> **INSPECTION END**

NG >> ● Replace park position switch or shift lock solenoid.
● Repair open circuit or short to ground or short to power in harness or connectors.

KEY INTERLOCK CABLE

PFP:34908

Components

ECS00CTD

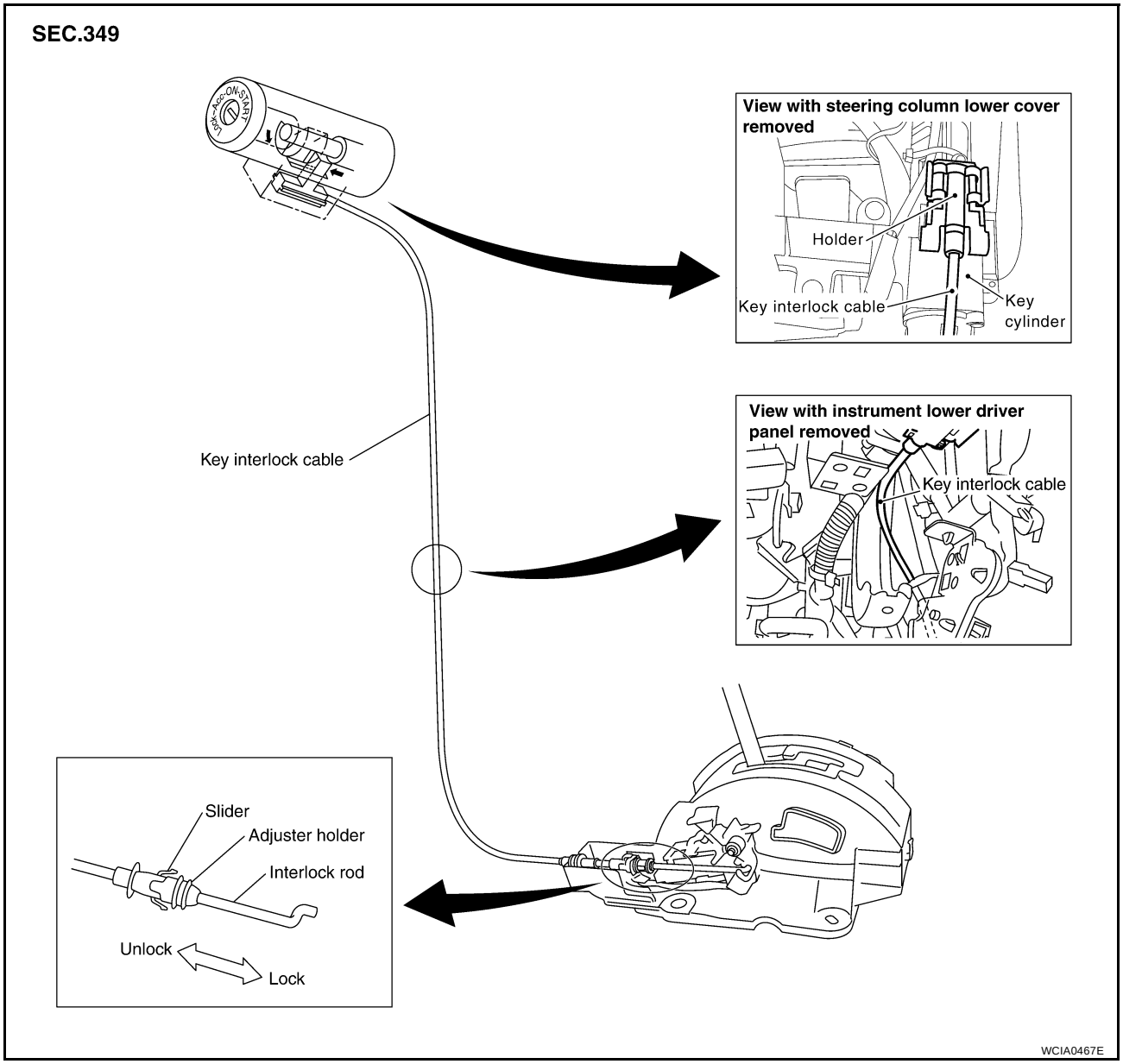

CAUTION:

- **Install key interlock cable in such a way that it will not be damaged by sharp bends, twists or interference with adjacent parts.**
- **After installing key interlock cable to control device, make sure that casing cap and bracket are firmly secured in their positions. If casing cap can be removed with an external load of less than 39 N (4.0 kg, 8.8 lb), replace key interlock cable with new one.**

Removal and Installation

ECS00CTE

REMOVAL

1. Unlock slider by squeezing lock tabs on slider from adjuster holder.
2. Remove casing cap from bracket of control device assembly and remove interlock rod from adjuster holder.

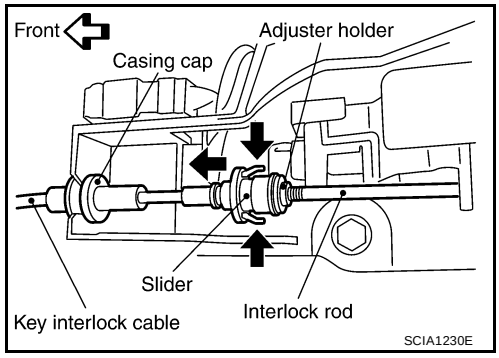

3. Remove holder from key cylinder and remove key interlock cable.

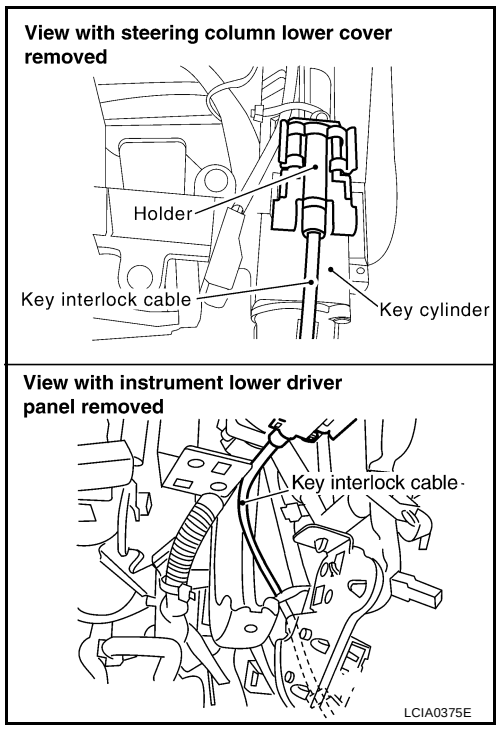

INSTALLATION

1. Set key interlock cable to key cylinder and install holder.
2. Turn ignition key to lock position.
3. Set selector lever to “P” position.

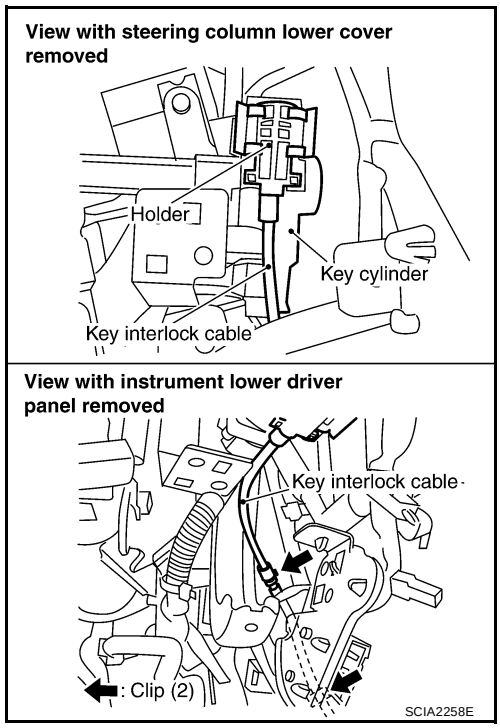

4. Insert interlock rod into adjuster holder.
5. Install casing cap to bracket.
6. Move slider in order to secure adjuster holder to interlock rod.

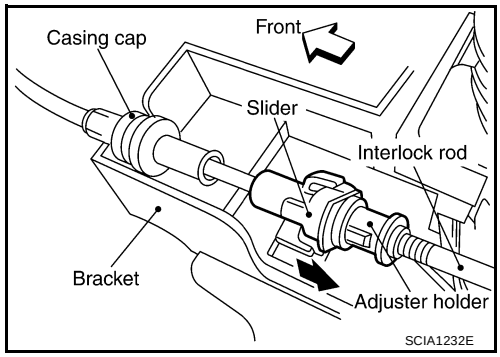

ON-VEHICLE SERVICE

PFP:00000

Oil Pan

ECS00ELT

REMOVAL AND INSTALLATION

Removal

1. Drain A/T fluid. Refer to AT-13, "A/T FLUID" .
2. Remove oil pan and gasket.

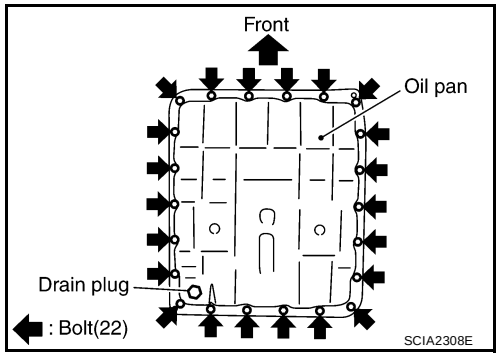

3. Check for foreign materials in oil pan to help determine cause of malfunction. If the A/T fluid is very dark, has some burned smell, or contains foreign particles then friction material (clutches, band) may need replacement. A tacky film that will not wipe clean indicates varnish build up. Varnish can cause valves, servo, and clutches to stick and can inhibit pump pressure.

   CAUTION:
   If friction material is detected, flush the transmission cooler after repair. Refer to AT-16, "A/T Fluid Cooler Cleaning" .
4. Remove magnets from oil pan.

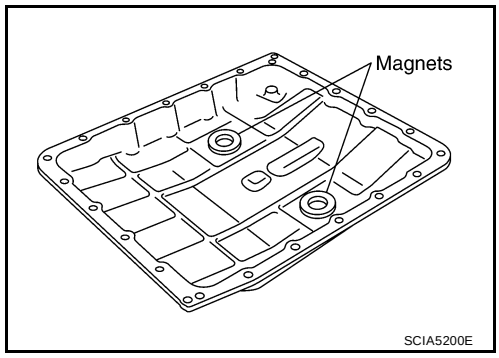

Installation

1. Install the oil pan magnets as shown.

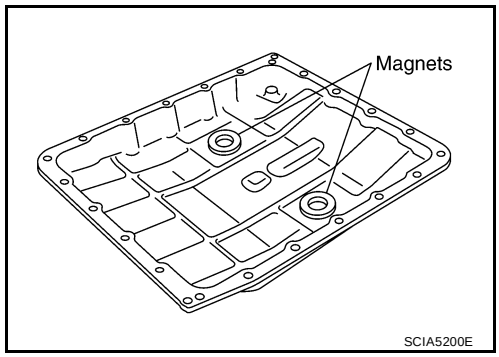

2. Install the oil pan and new oil pan gasket.

CAUTION:

- **Be sure the oil drain plug is located to the rear of the transmission assembly.**
- **Before installing oil pan bolts, remove any traces of old sealant from the sealing surfaces and threaded holes.**
- **Do not reuse old gasket, replace with a new one.**
- **Always replace the oil pan bolts as they are self-sealing.**
- **Partially install the oil pan bolts in a criss-cross pattern to prevent dislocation of the gasket.**

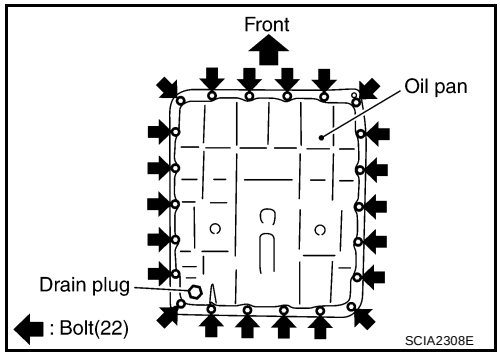

3. Tighten oil pan bolts in numerical order as shown.

Oil pan bolts : 7.9 N·m (0.81 kg-m, 70 in-lb)

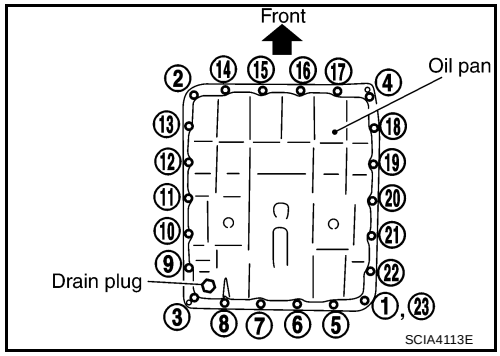

4. Install drain plug with new gasket to oil pan and tighten to specification.

Drain plug : 34 N·m (3.5 kg-m, 25 ft-lb)

CAUTION:

Do not reuse drain plug gasket.

5. Refill the A/T with fluid and check for fluid leakage. Refer to AT-13, "A/T FLUID" .

Control Valve With TCM and A/T Fluid Temperature Sensor 2

ECS00ELU

COMPONENTS

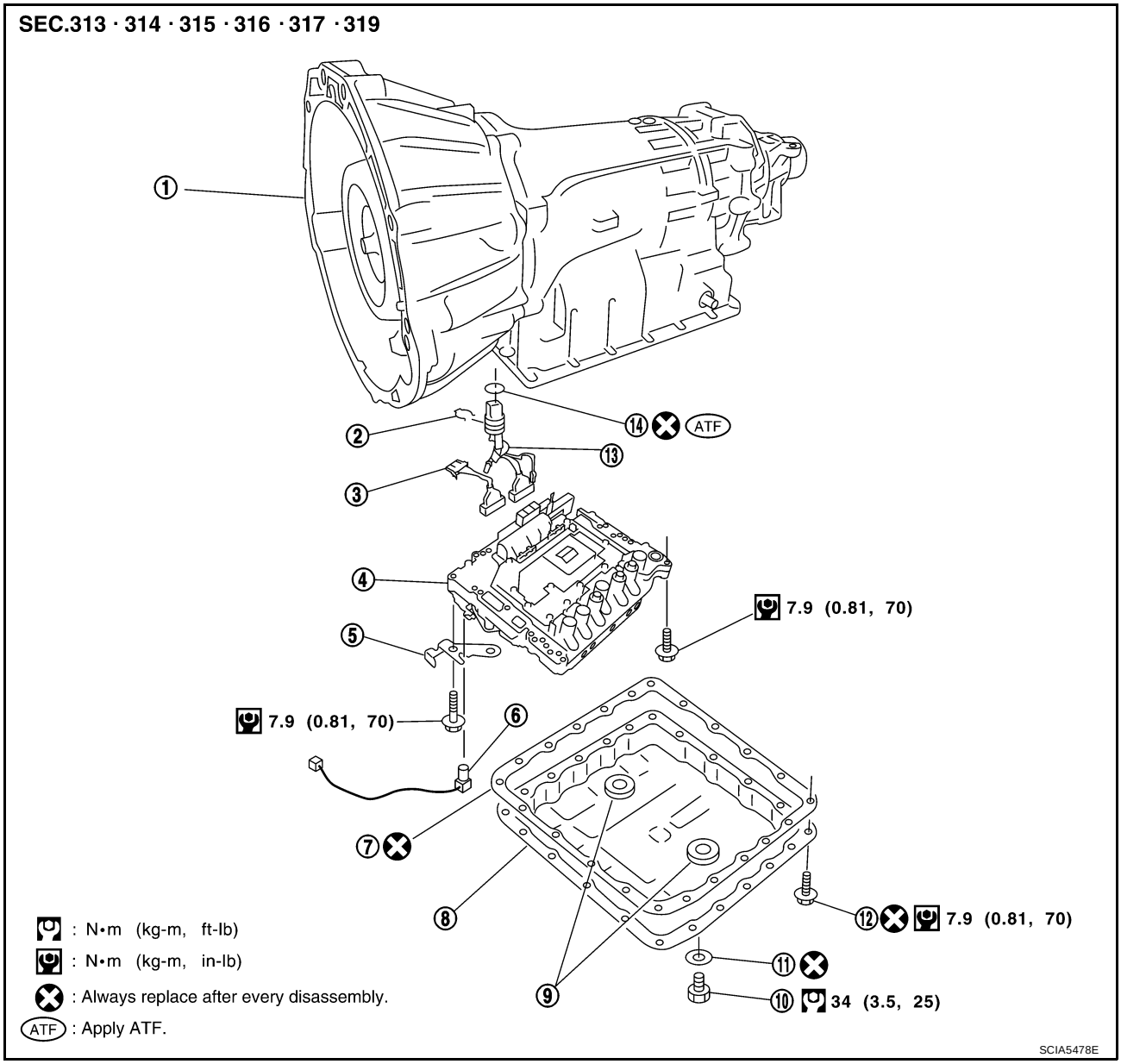

1. Transmission	2. Snap ring	3. Sub-harness
4. Control valve with TCM	5. Bracket	6. A/T fluid temperature sensor 2
7. Oil pan gasket	8. Oil pan	9. Magnet
10. Drain plug	11. Drain plug gasket	12. Oil pan bolt
13. Terminal cord assembly	14. O-ring	

CONTROL VALVE WITH TCM REMOVAL AND INSTALLATION

Removal

1. Disconnect negative battery terminal.
2. Drain A/T fluid. Refer to AT-13, "A/T FLUID" .
3. Disconnect A/T assembly harness connector.
4. Remove snap ring from A/T assembly harness connector.

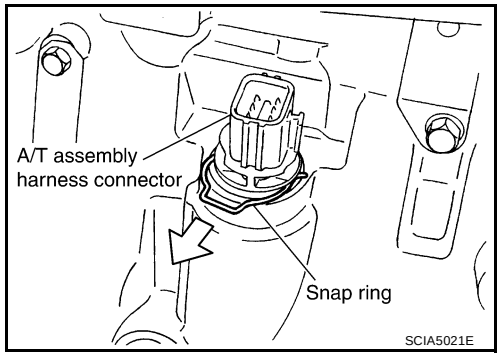

5. Push A/T assembly harness connector.

   CAUTION:
   Do not damage connector.

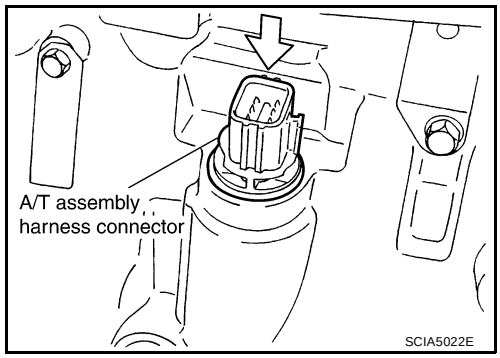

6. Remove oil pan and oil pan gasket. Refer to AT-226, "Removal" .
7. Straighten the terminal clip to free the terminal cord assembly for A/T fluid temperature sensor 2 harness.
8. Disconnect A/T fluid temperature sensor 2 connector.

   CAUTION:
   Do not damage connector.

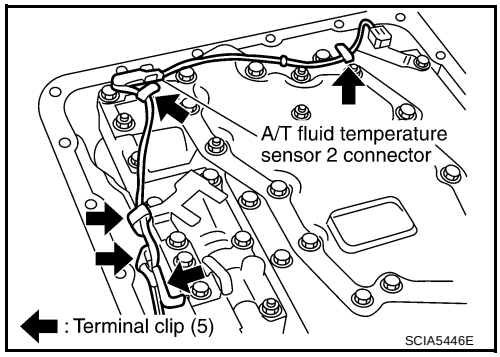

9. Straighten terminal clip to free the revolution sensor harness.
10. Disconnect revolution sensor connector.

    CAUTION:
    Do not damage connector.

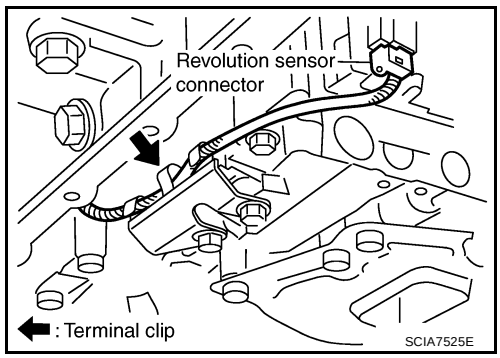

11. Remove bolts (A), (B) and (C) from control valve with TCM.

Bolt symbol	Length mm (in)	Number of bolts
A	42 (1.65)	5
B	55 (2.17)	6
C	40 (1.57)	1

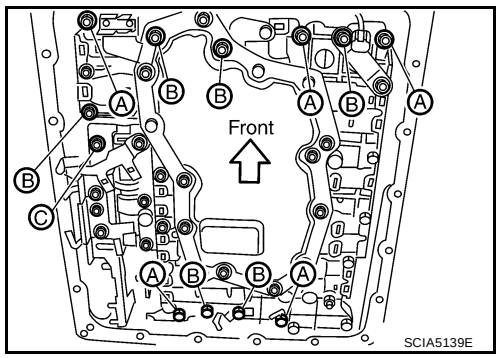

12. Remove control valve with TCM from transmission case.

CAUTION:
When removing, be careful with the manual valve notch and manual plate height. Remove it vertically.

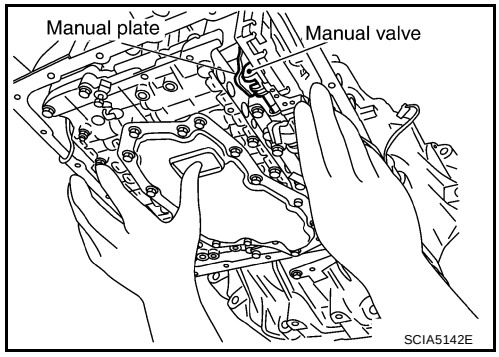

13. Remove A/T fluid temperature sensor 2 with bracket from control valve with TCM.

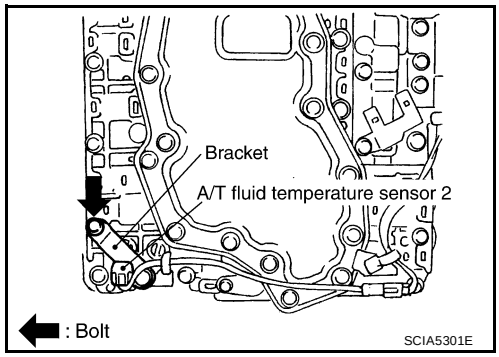

14. Remove bracket from A/T fluid temperature sensor 2.

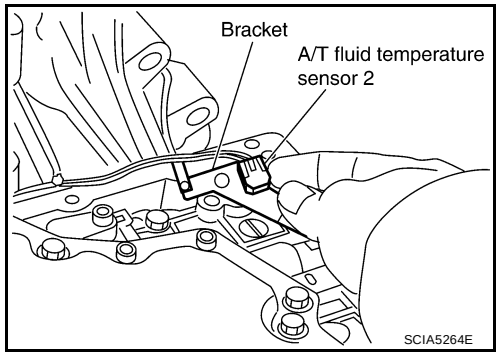

15. Remove O-ring from A/T assembly harness connector.

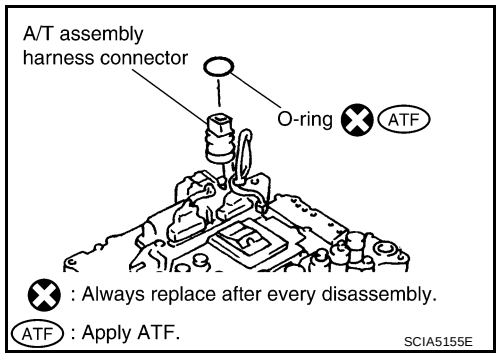

16. Disconnect TCM connectors.

CAUTION:
Do not damage connectors.

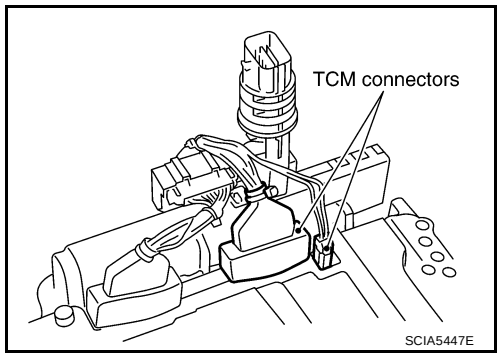

17. Remove A/T assembly harness connector from control valve with TCM using suitable tool.

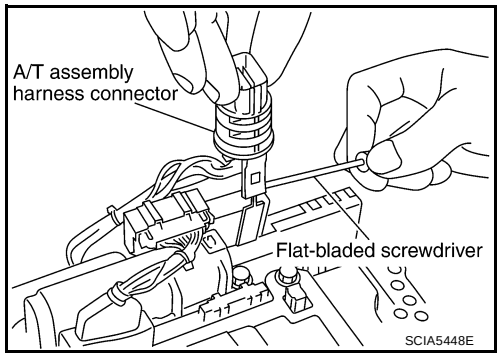

18. Disconnect TCM connector and park/neutral position switch connector

CAUTION:
Do not damage connectors.

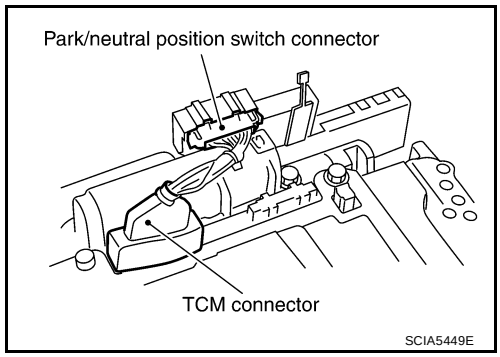

Installation

CAUTION:

After completing installation, check A/T fluid leakage and fluid level. Refer to AT-13, "Checking the A/T Fluid (ATF)" .

1. Connect TCM connector and park/neutral position switch connector.

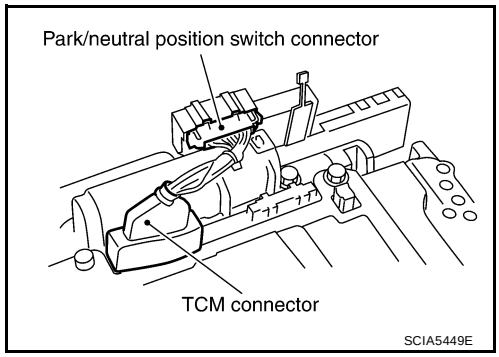

2. Install A/T assembly harness connector to control valve with TCM.

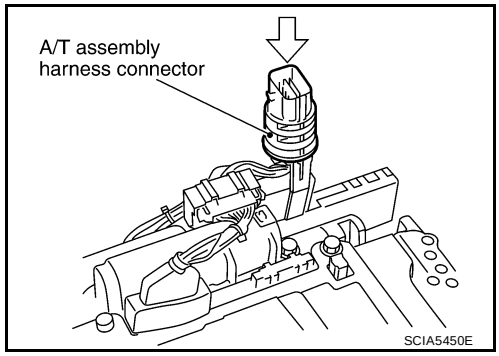

3. Connect TCM connector.

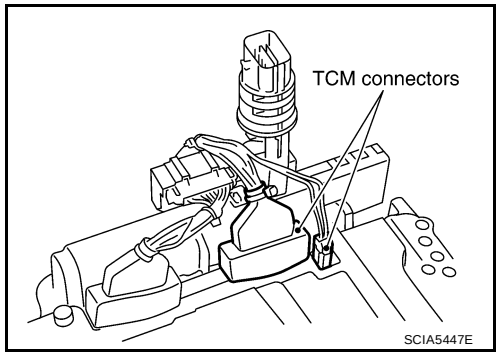

4. Install new O-ring in A/T assembly harness connector.

   CAUTION:
   - **Do not reuse O-ring.**
   - **Apply ATF to O-ring.**

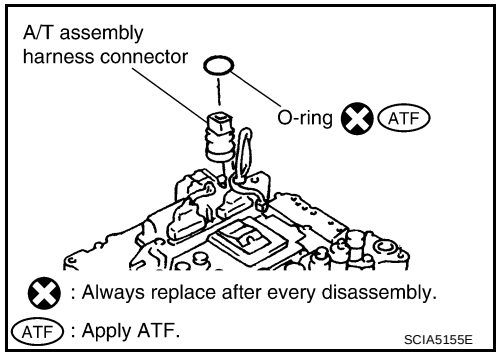

5. Install A/T fluid temperature sensor 2 to bracket.

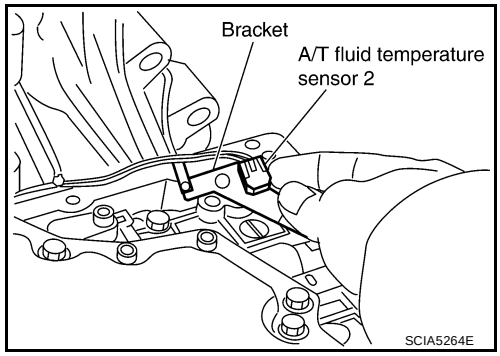

6. Install A/T fluid temperature sensor 2 (with bracket) to control valve with TCM. Tighten A/T fluid temperature sensor 2 bolt to the specified torque. Refer to AT-228, "COMPONENTS" .

CAUTION:
Adjust bolt hole of bracket to bolt hole of control valve with TCM.

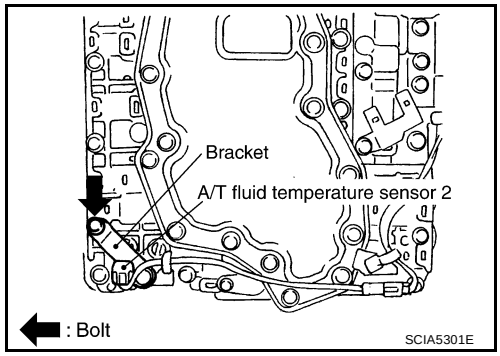

7. Install control valve with TCM in transmission case.

CAUTION:
- **Make sure that turbine revolution sensor is securely installed into turbine revolution sensor hole.**
- **Hang down revolution sensor harness toward outside so as not to disturb installation of control valve with TCM.**
- **Adjust A/T assembly harness connector of control valve with TCM to terminal hole of transmission case.**

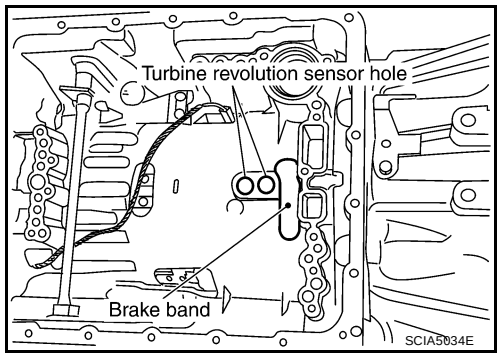

- **Assemble it so that manual valve cutout is engaged with manual plate projection.**

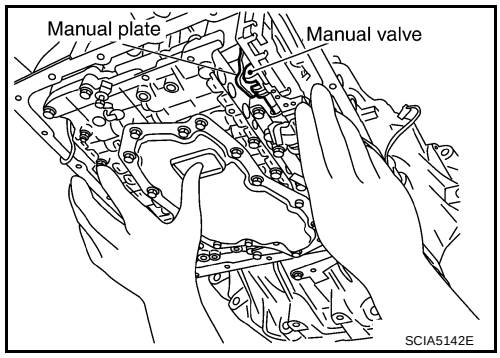

8. Install bolts (A), (B) and (C) in control valve with TCM.

Bolt symbol	Length mm (in)	Number of bolts
A	42 (1.65)	5
B	55 (2.17)	6
C	40 (1.57)	1

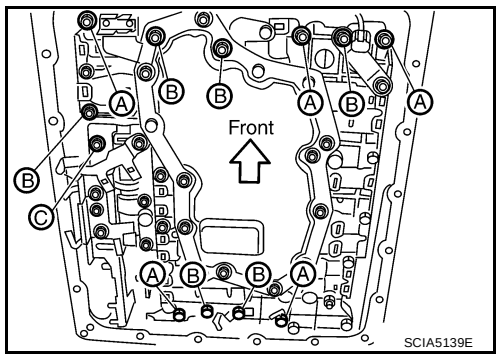

9. Tighten bolt (1), (2) and (3) temporarily to prevent dislocation. After that tighten them in order (1 → 2 → 3). Then tighten other bolts.
10. Tighten control valve with TCM bolts to the specified torque. Refer to AT-228, "COMPONENTS" .

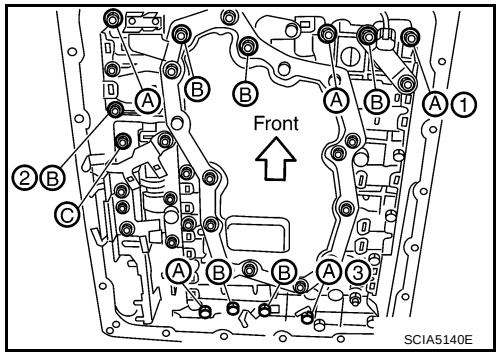

11. Connect A/T fluid temperature sensor 2 connector.
12. Securely fasten terminal cord assembly and A/T fluid temperature sensor 2 harness with terminal clips.

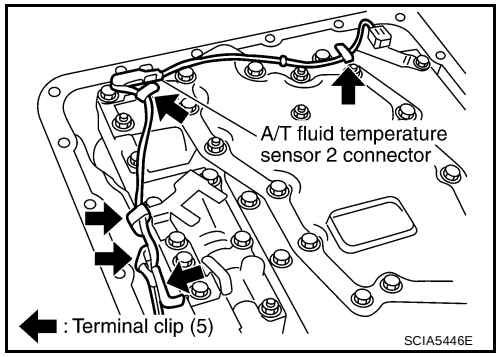

13. Connect revolution sensor connector.
14. Securely fasten revolution sensor harness with terminal clip.

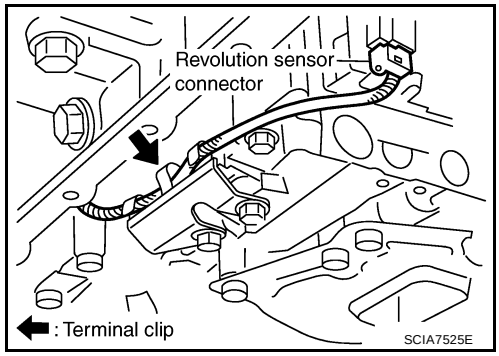

15. Install oil pan to transmission case. Refer to AT-226, "Installation" .

16. Pull up A/T assembly harness connector.

    CAUTION:
    Do not damage connector.

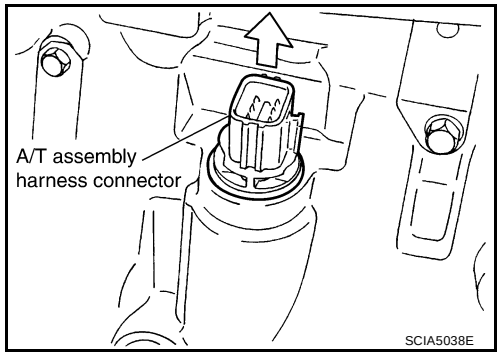

17. Install snap ring to A/T assembly harness connector.
18. Connect A/T assembly harness connector.
19. Connect the negative battery terminal.
20. Refill the A/T with fluid and check the fluid level and for fluid leakage. Refer to AT-13, "A/T FLUID" .

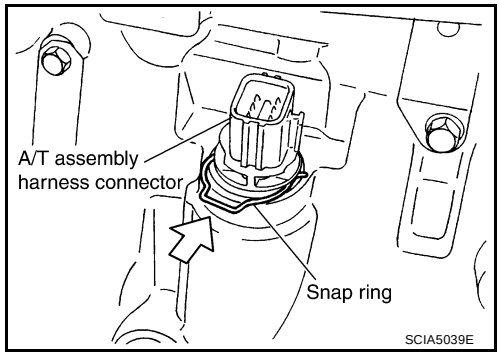

A/T FLUID TEMPERATURE SENSOR 2 REMOVAL AND INSTALLATION

Removal

1. Disconnect negative battery terminal.
2. Drain A/T fluid. Refer to AT-13, "A/T FLUID" .
3. Remove oil pan and oil pan gasket. Refer to AT-226, "Removal" .
4. Straighten terminal clip to free A/T fluid temperature sensor 2 harness.
5. Disconnect A/T fluid temperature sensor 2 connector.

   CAUTION:
   Do not damage connector.

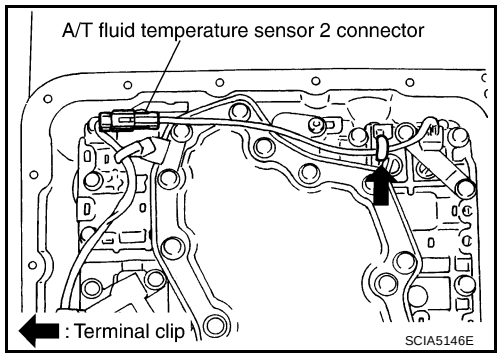

6. Remove A/T fluid temperature sensor 2 with bracket from control valve with TCM.

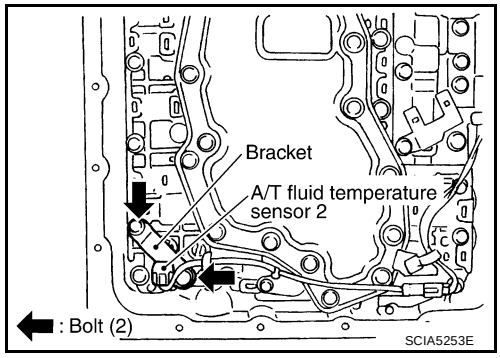

7. Remove bracket from A/T fluid temperature sensor 2.

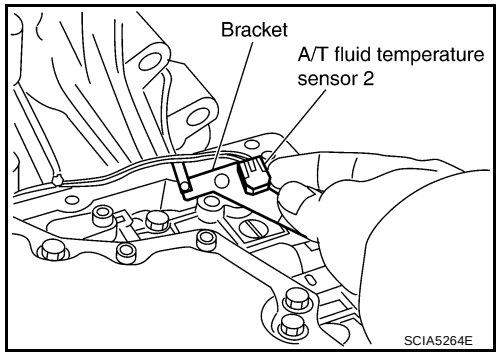

Installation

CAUTION:

After completing installation, check A/T fluid leakage and fluid level. Refer to AT-13, "A/T FLUID" .

1. Install A/T fluid temperature sensor 2 to bracket.

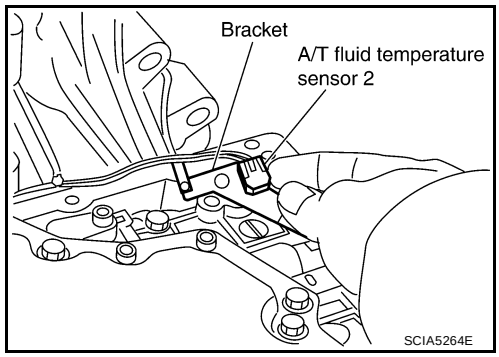

2. Install A/T fluid temperature sensor 2 (with bracket) in control valve with TCM. Tighten A/T fluid temperature sensor 2 bolt to the specified torque. Refer to AT-228, "COMPONENTS" .

   CAUTION:

   Adjust bolt hole of bracket to bolt hole of control valve with TCM.

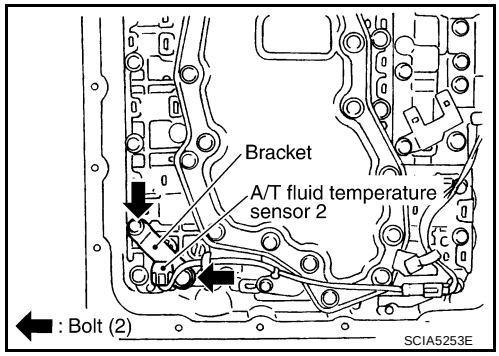

3. Connect A/T fluid temperature sensor 2 connector.
4. Securely fasten A/T fluid temperature sensor 2 harness with terminal clip.

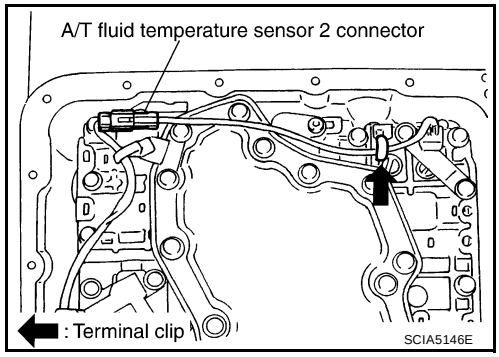

5. Install oil pan to transmission case. Refer to AT-226, "Installation" .
6. Connect the negative battery terminal.
7. Refill the A/T with fluid and check the fluid level and for fluid leakage. Refer to AT-13, "A/T FLUID" .

Rear Oil Seal

ECS00ELV

REMOVAL AND INSTALLATION

Removal

1. Remove rear propeller shaft. Refer to PR-10, "Removal and Installation" .
2. Remove transfer from transmission (4WD models). Refer to TF-111, "Removal and Installation" .
3. Remove rear oil seal using suitable tool.

   CAUTION:
   Do not scratch rear extension assembly (2WD models) or adapter case assembly (4WD models).

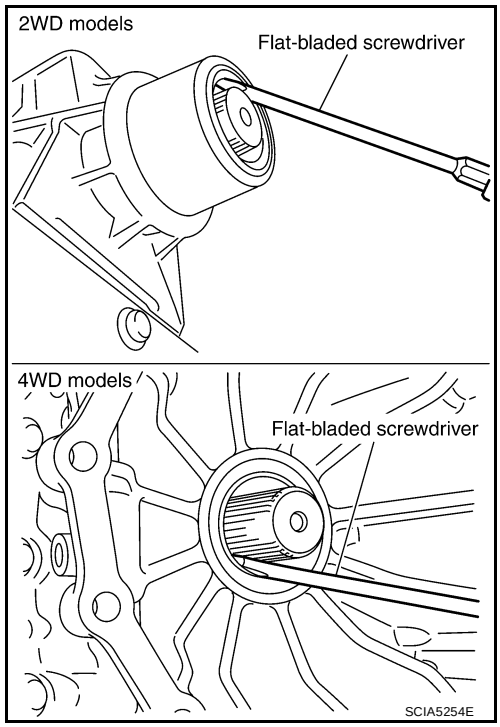

Installation

1. Install new rear oil seal until it is flush into the rear extension case (2WD models) using Tool or adapter case (4WD models) using suitable tool.

   Tool number : ST33400001 (J-26082)

   CAUTION:
   - **Apply ATF to rear oil seal.**
   - **Do not reuse rear oil seal.**
2. Install transfer to transmission (4WD models). Refer to TF-111, "Removal and Installation" .
3. Install rear propeller shaft. Refer to PR-10, "Removal and Installation" .
4. Check the A/T fluid level and for fluid leakage. Refer to AT-13, "A/T FLUID" .

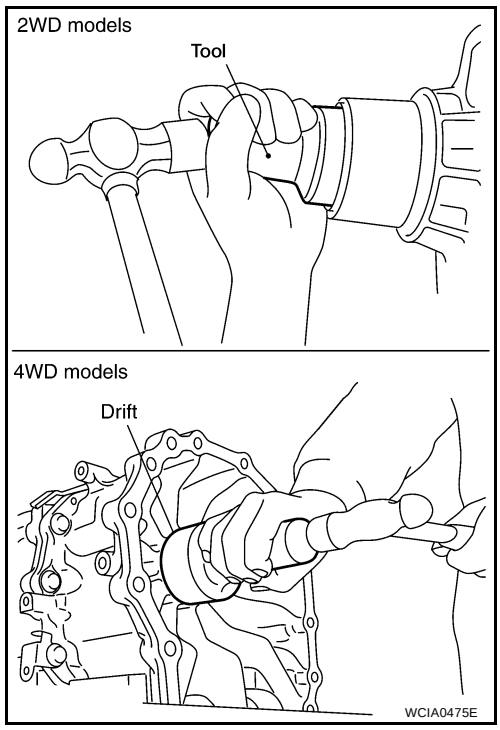

AIR BREATHER HOSE

PFP:31098

Removal and Installation

ECS00CTI

2WD

Refer to the figure below for air breather hose removal and installation procedure.

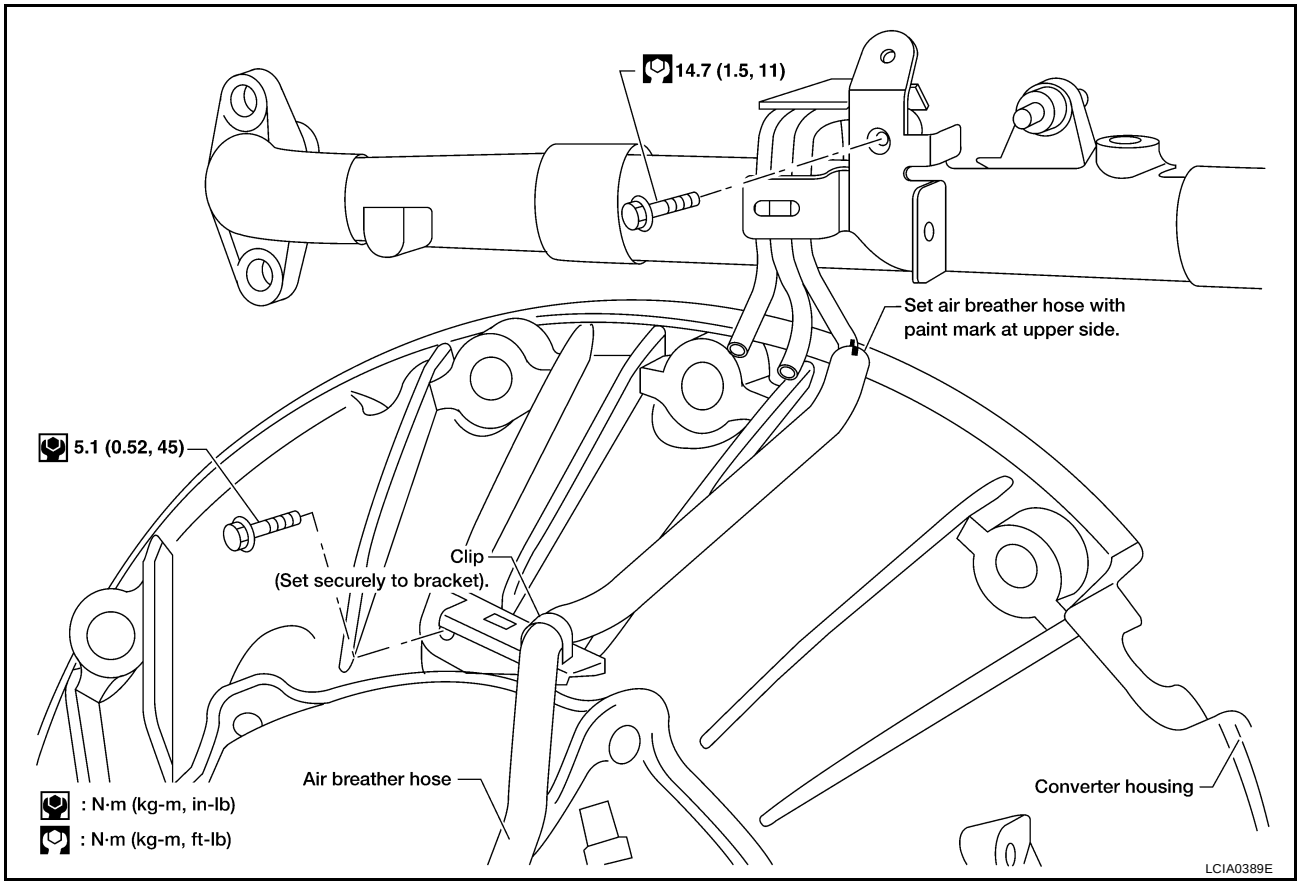

CAUTION:

- **When installing an air breather hose, do not to crush or block by folding or bending the hose.**
- **When inserting a hose to the transmission tube, be sure to insert it fully until its end reaches the tube bend portion.**

4WD

Refer to the figure below for air breather hose removal and installation procedure.

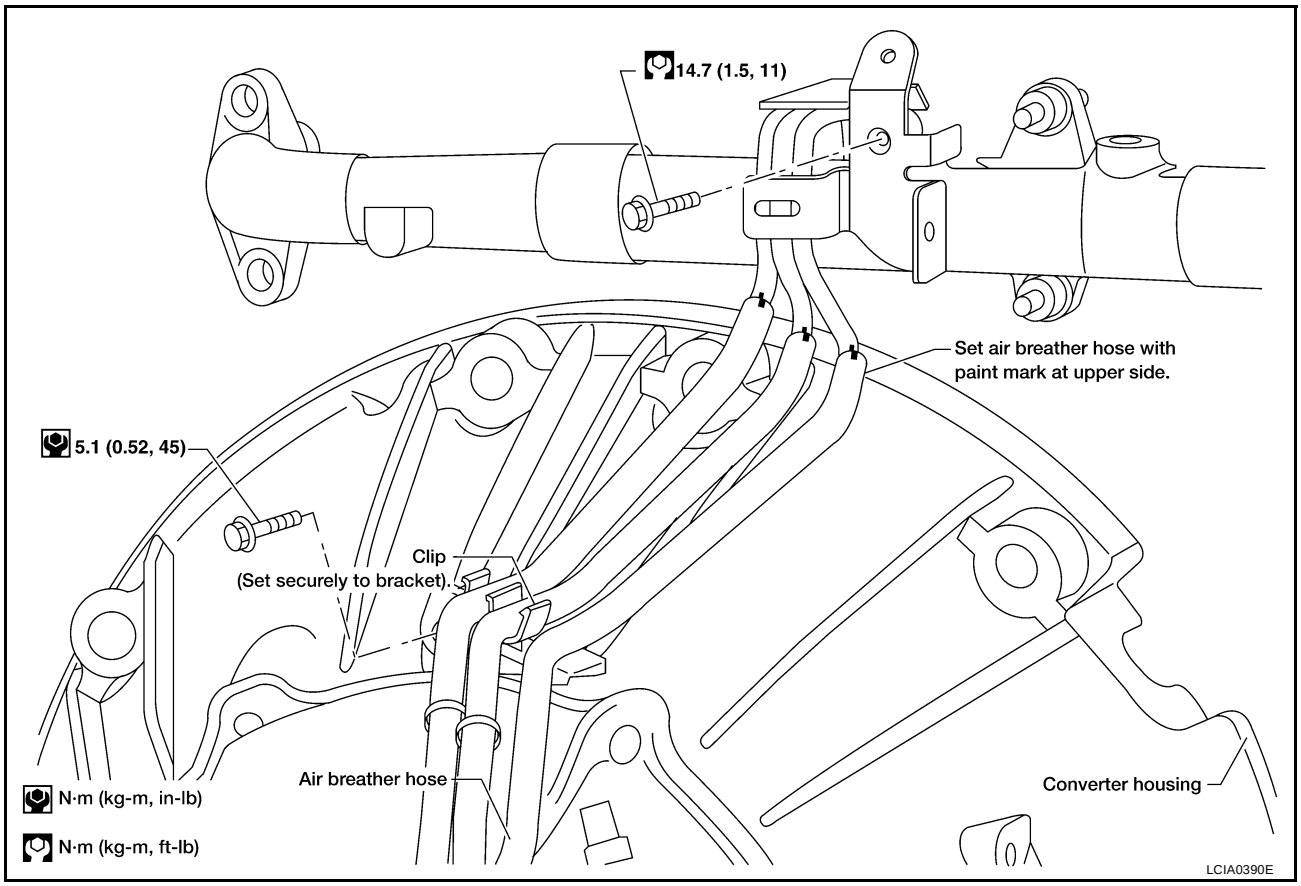

CAUTION:

- **When installing an air breather hose, do not to crush or block by folding or bending the hose.**
- **When inserting a hose to the transmission tube, be sure to insert it fully until its end reaches the tube bend portion.**

A/T FLUID COOLER

PFP:21600

Removal and Installation

ECS00FSP

Refer to the figure below for A/T cooler removal and installation.

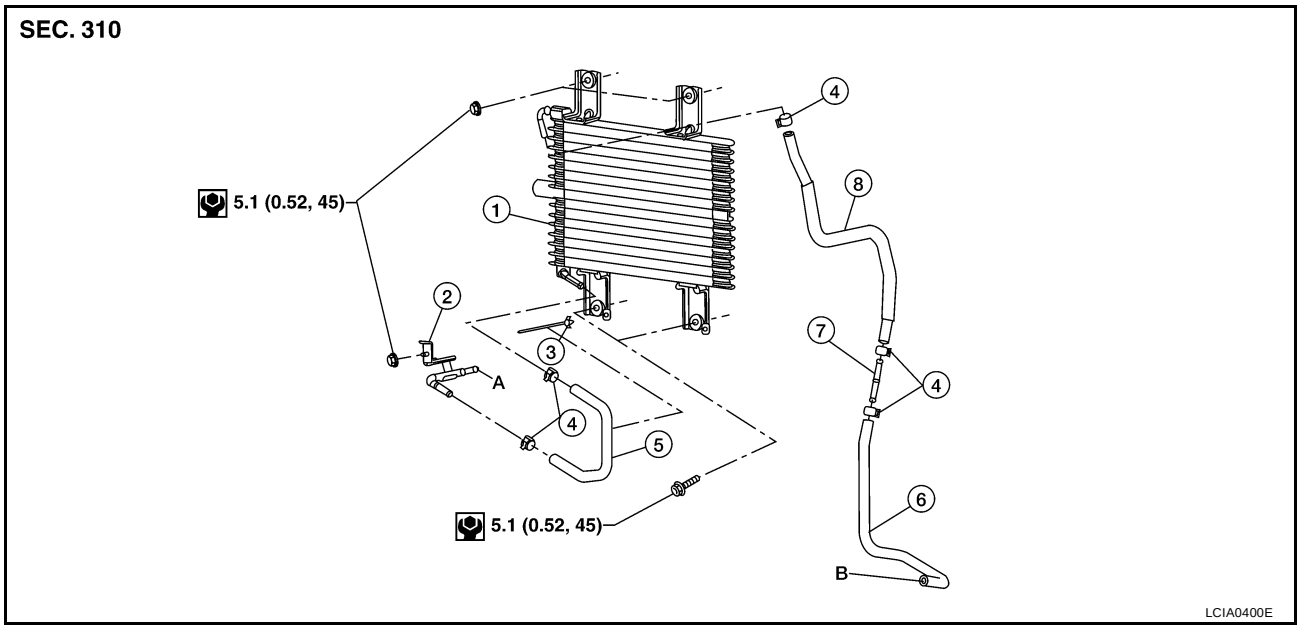

1.	A/T fluid cooler	2.	Fluid cooler tube	3.	Clip
4.	Hose clamp	5.	Cooler hose (lower)	6.	Cooler hose
7.	Tube joint	8.	Cooler hose (upper)	A.	To transmission
B.	From radiator				

- After completing installation, check fluid leakage and fluid level. Refer to AT-13, "A/T FLUID" .

TRANSMISSION ASSEMBLY

PFP:31020

Removal and Installation (2WD)

ECS00ELX

COMPONENTS

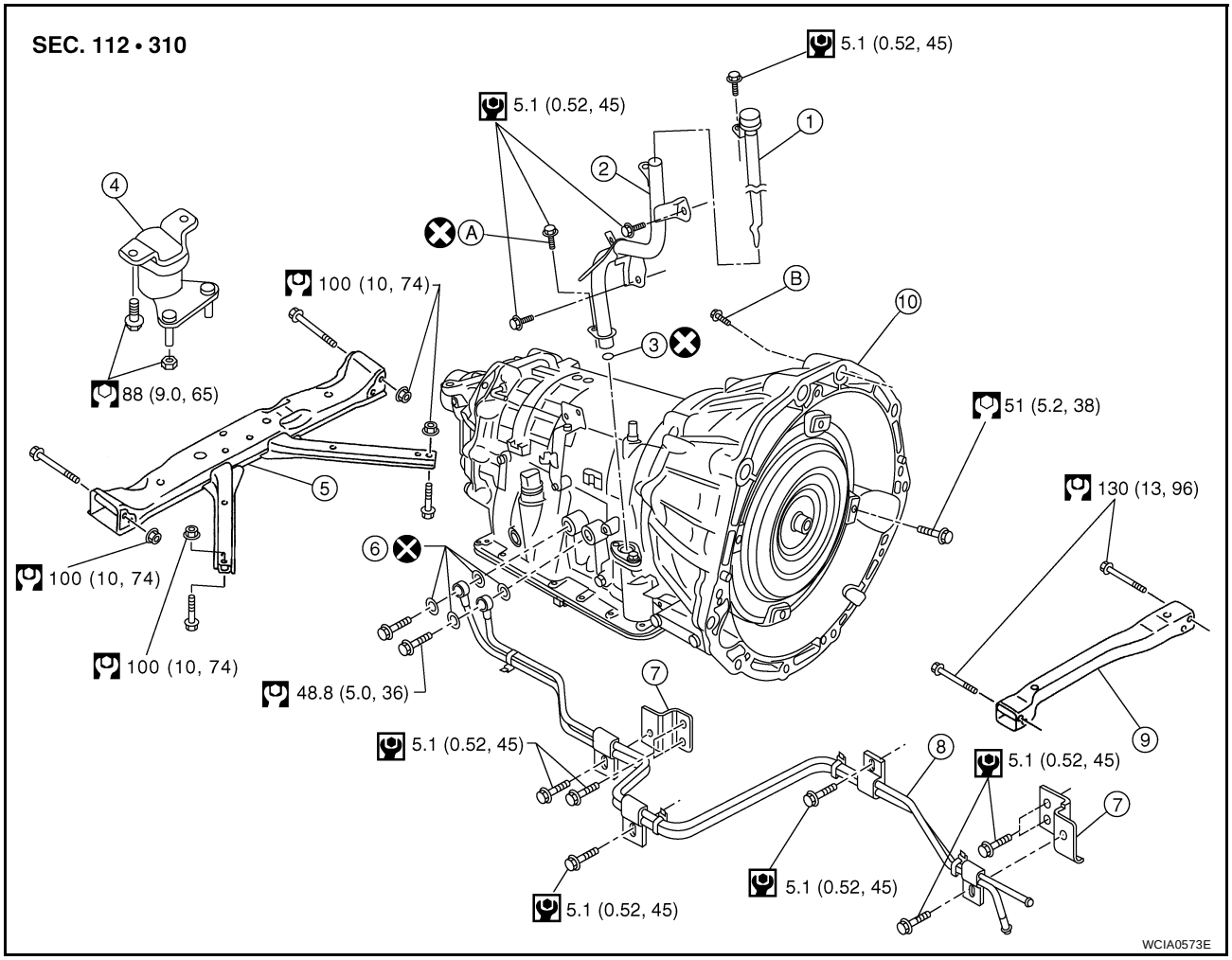

1.	A/T fluid level gauge	2.	A/T fluid charging pipe	3.	O-ring
4.	Insulator	5.	A/T crossmember	6.	Copper washer
7.	Bracket	8.	A/T fluid cooler tube	9.	Front crossmember
10.	Transmission assembly	A.	Self-sealing bolt	B.	Refer to installation.

REMOVAL

CAUTION:

When removing the A/T assembly from engine, first remove the crankshaft position sensor (POS) from the A/T assembly.

1. Disconnect the negative battery terminal.
2. Remove the A/T fluid level gauge.
3. Remove the LH fender protector.

4. Remove the crankshaft position sensor (POS) from the A/T assembly.

   CAUTION:
   - **Do not subject it to impact by dropping or hitting it.**
   - **Do not disassemble.**
   - **Do not allow metal filings or foreign material to get on the sensor front edge magnetic area.**
   - **Do not place in an area affected by magnetism.**

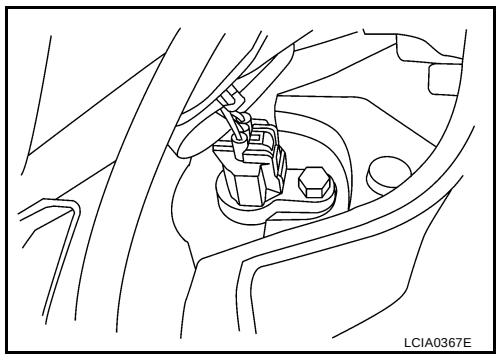

5. Remove the undercovers using power tool.
6. Partially drain the A/T fluid. Refer to AT-13, "A/T FLUID" .
7. Remove the front crossmember using power tool.
8. Remove the starter motor.
9. Remove the rear propeller shaft. Refer to PR-10, "Removal and Installation" .
10. Remove the left and right front exhaust tubes. Refer to EX-4, "Removal and Installation" .
11. Remove the A/T selector control cable and bracket from the A/T.
12. Disconnect the A/T fluid cooler tubes from the A/T assembly.
13. Remove the dust cover from the converter housing.
14. Turn the crankshaft to access and remove the four bolts for the drive plate to torque converter.

    CAUTION:
    When turning the crankshaft, turn it clockwise as viewed from the front of the engine.

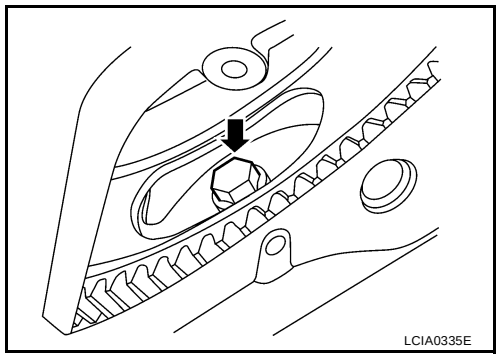

15. Support the A/T assembly using a transmission jack.

    CAUTION:
    When setting the transmission jack, be careful not to allow it to collide against the drain plug.
16. Remove the nuts securing the insulator to the crossmember.
17. Remove the crossmember using power tool.
18. Tilt the transmission slightly to gain clearance between the body and the transmission, then disconnect the air breather hose.
19. Disconnect the A/T assembly harness connector.
20. Remove the wiring harness from the retainers.
21. Remove the A/T fluid charging pipe.
22. Plug any openings such as the A/T fluid charging pipe hole.
23. Remove the A/T assembly to engine bolts using power tool.
24. Remove A/T assembly from the vehicle using Tool.

    Tool number : — (J-47002)

    CAUTION:
    - **Secure the torque converter to prevent it from dropping.**
    - **Secure the A/T assembly the transmission jack.**

    NOTE:
    The actual special service Tool may differ from Tool shown.

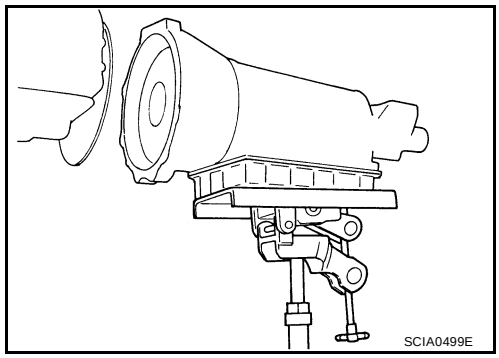

INSPECTION

Installation and Inspection of Torque Converter

- After inserting the torque converter to the transmission, check dimension "A" to ensure it is within the reference value limit.

  Dimension "A" : 25.0 mm (0.98 in) or more

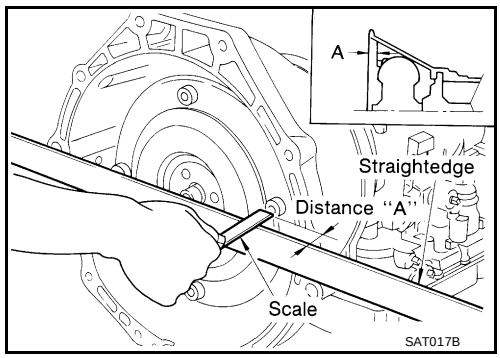

INSTALLATION

Installation is in the reverse order of the removal.

CAUTION:

- **When replacing an engine or transmission you must make sure the dowels are installed correctly during re-assembly.**
- **Improper alignment caused by missing dowels may cause vibration, oil leaks or breakage of drivetrain components.**
- **Do not reuse O-rings and copper washers. Refer to AT-241, "COMPONENTS" .**
- **When turning crankshaft, turn it clockwise as viewed from the front of the engine.**
- **After converter is installed to drive plate, rotate crankshaft several turns and check to be sure that transmission rotates freely without binding.**
- **When tightening the bolts for the torque converter while securing the crankshaft pulley bolt, be sure to confirm the tightening torque of the crankshaft pulley bolt. Refer to EM-55, "TIMING CHAIN" .**
- When installing transmission to the engine, tighten the bolts to the specified torque using sequence shown.

  Transmission bolts : 74 N·m (7.5 kg-m, 55 ft-lb)

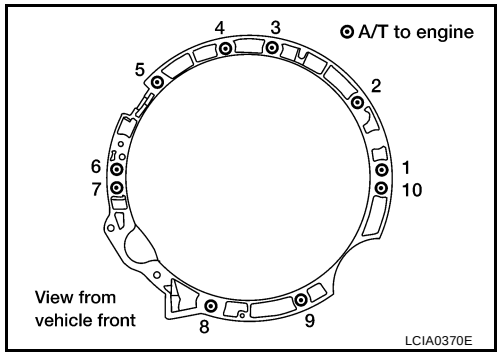

- When installing the drive plate to torque converter bolts, align the positions of bolts for drive plate with those of the torque converter and temporarily tighten the bolts. Then tighten the bolts with the specified torque.
- After completing installation, fill A/T with fluid and check fluid leakage, fluid level, and the positions of A/T. Refer to AT-13, "A/T FLUID" , AT-217, "Checking of A/T Position" and AT-217, "Adjustment of A/T Position" .

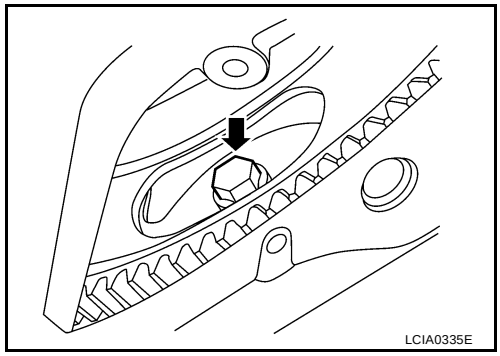

Removal and Installation (4WD)

ECS00ELY

COMPONENTS

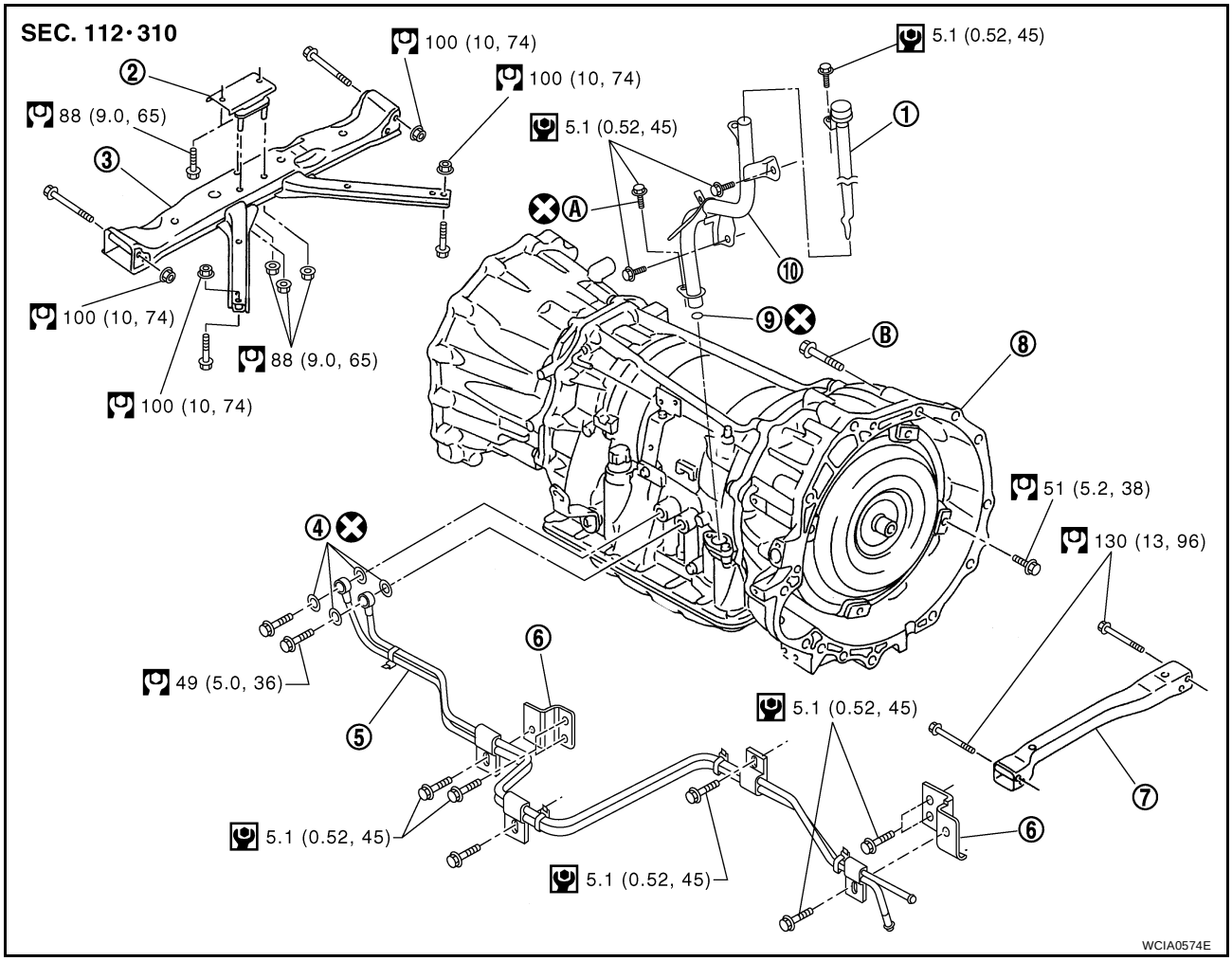

1.	A/T fluid level gauge	2.	Insulator	3.	A/T crossmember
4.	Copper washers	5.	A/T fluid cooler tube	6.	Bracket
7.	Front crossmember	8.	Transmission assembly	9.	O-ring
10.	A/T fluid charging pipe	A.	Self-sealing bolt	B.	Refer to installation.

REMOVAL

CAUTION:

When removing the A/T assembly from engine, first remove the crankshaft position sensor (POS) from the A/T assembly.

1. Disconnect the negative battery terminal.
2. Remove the A/T fluid level gauge.
3. Remove the LH fender protector.
4. Remove the crankshaft position sensor (POS) from the A/T assembly.

   CAUTION:
   - **Do not subject it to impact by dropping or hitting it.**
   - **Do not disassemble.**
   - **Do not allow metal filings or foreign material to get on the sensor's front edge magnetic area.**
   - **Do not place in an area affected by magnetism.**

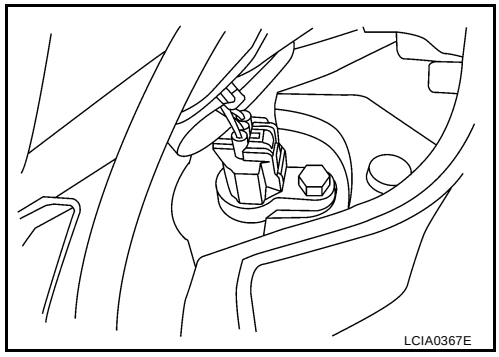

5. Remove the undercovers using power tool.
6. Partially drain the A/T fluid. Refer to AT-13, "A/T FLUID" .

7. Remove the front crossmember using power tool.
8. Remove the starter motor.
9. Remove the front and rear propeller shafts. Refer to PR-5, "Removal and Installation" and PR-10, "Removal and Installation" .
10. Remove the left and right front exhaust tubes. Refer to EX-4, "Removal and Installation" .
11. Remove the A/T selector control cable and bracket from the A/T.
12. Disconnect the fluid cooler tubes from the A/T assembly.
13. Remove the dust cover from the converter housing.
14. Turn the crankshaft to access and remove the four bolts for the drive plate and torque converter.

    CAUTION:
    When turning the crankshaft, turn it clockwise as viewed from the front of the engine.

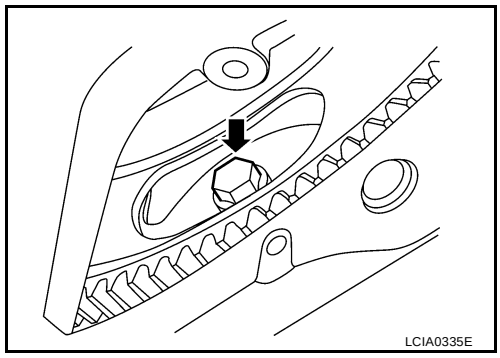

15. Support the A/T assembly using a transmission jack.

    CAUTION:
    When setting the transmission jack, be careful not to allow it to collide against the drain plug.
16. Remove the nuts securing the insulator to the crossmember.
17. Remove the crossmember using power tool.
18. Tilt the transmission slightly to gain clearance between the body and the transmission, then disconnect the air breather hose.
19. Disconnect the following:
    - A/T assembly harness connector
    - 4LO switch connector
    - Wait detection switch connector
    - ATP switch connector
    - Transfer control device connector
20. Remove the wiring harness from the retainers.
21. Remove the A/T fluid charging pipe.
22. Plug any openings such as the fluid charging pipe hole.
23. Remove the A/T assembly to engine bolts using power tool.
24. Remove A/T assembly with transfer from the vehicle using Tool.

    Tool number : — (J-47002)

    CAUTION:
    - **Secure the torque converter to prevent it from dropping.**
    - **Secure the A/T assembly to the transmission jack.**

    NOTE:
    The actual special service Tool may differ from Tool shown.

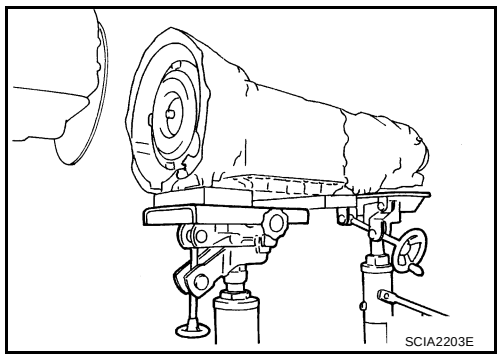

25. Remove the transfer from the A/T assembly. Refer to TF-111, "Removal and Installation" .

INSPECTION

Installation and Inspection of Torque Converter

- After inserting the torque converter to the transmission, be sure to check dimension "A" to ensure it is within the reference value limit.

  Dimension "A" : 25.0 mm (0.98 in) or more

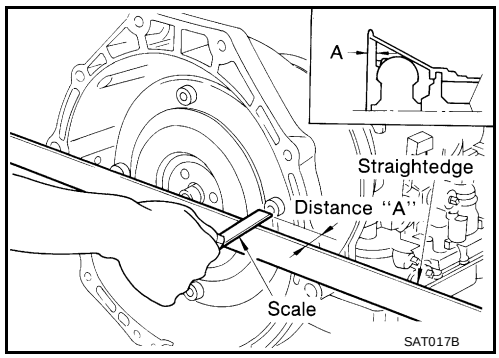

INSTALLATION

Installation is in the reverse order of removal.

CAUTION:

- **When replacing an engine or transmission you must make sure the dowels are installed correctly during re-assembly.**
- **Improper alignment caused by missing dowels may cause vibration, oil leaks or breakage of drivetrain components.**
- **Do not reuse O-rings and copper washers. Refer to AT-244, "COMPONENTS" .**
- **When turning crankshaft, turn it clockwise as viewed from the front of the engine.**
- **After converter is installed to drive plate, rotate crankshaft several turns and check to be sure that transmission rotates freely without binding.**
- **When tightening the bolts for the torque converter while securing the crankshaft pulley bolt, be sure to confirm the tightening torque of the crankshaft pulley bolt. Refer to EM-55, "TIMING CHAIN" .**
- When installing transmission to the engine, tighten the bolts to the specified torque using sequence shown.

  Transmission bolts : 74 N·m (7.5 kg-m, 55 ft-lb)

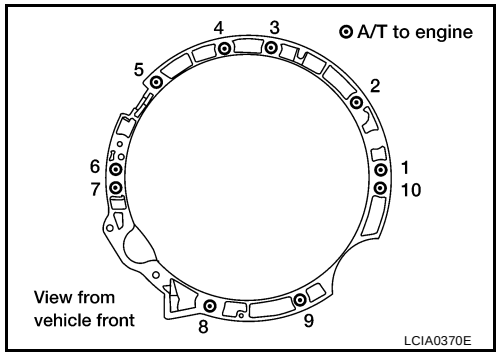

- When installing the drive plate to torque converter bolts, align the positions of bolts for drive plate with those of the torque converter and temporarily tighten the bolts. Then tighten the bolts with the specified torque.
- After completing installation, fill A/T with fluid and check fluid leakage, fluid level, and the positions of A/T. Refer to AT-13, "A/T FLUID" , AT-217, "Checking of A/T Position" and AT-217, "Adjustment of A/T Position" .

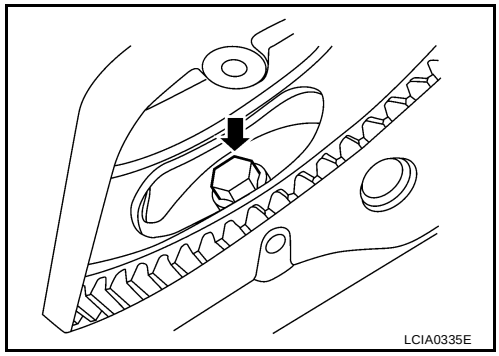

OVERHAUL

PFP:00000

Components

ECS00ELZ

SEC.311•313•314•315

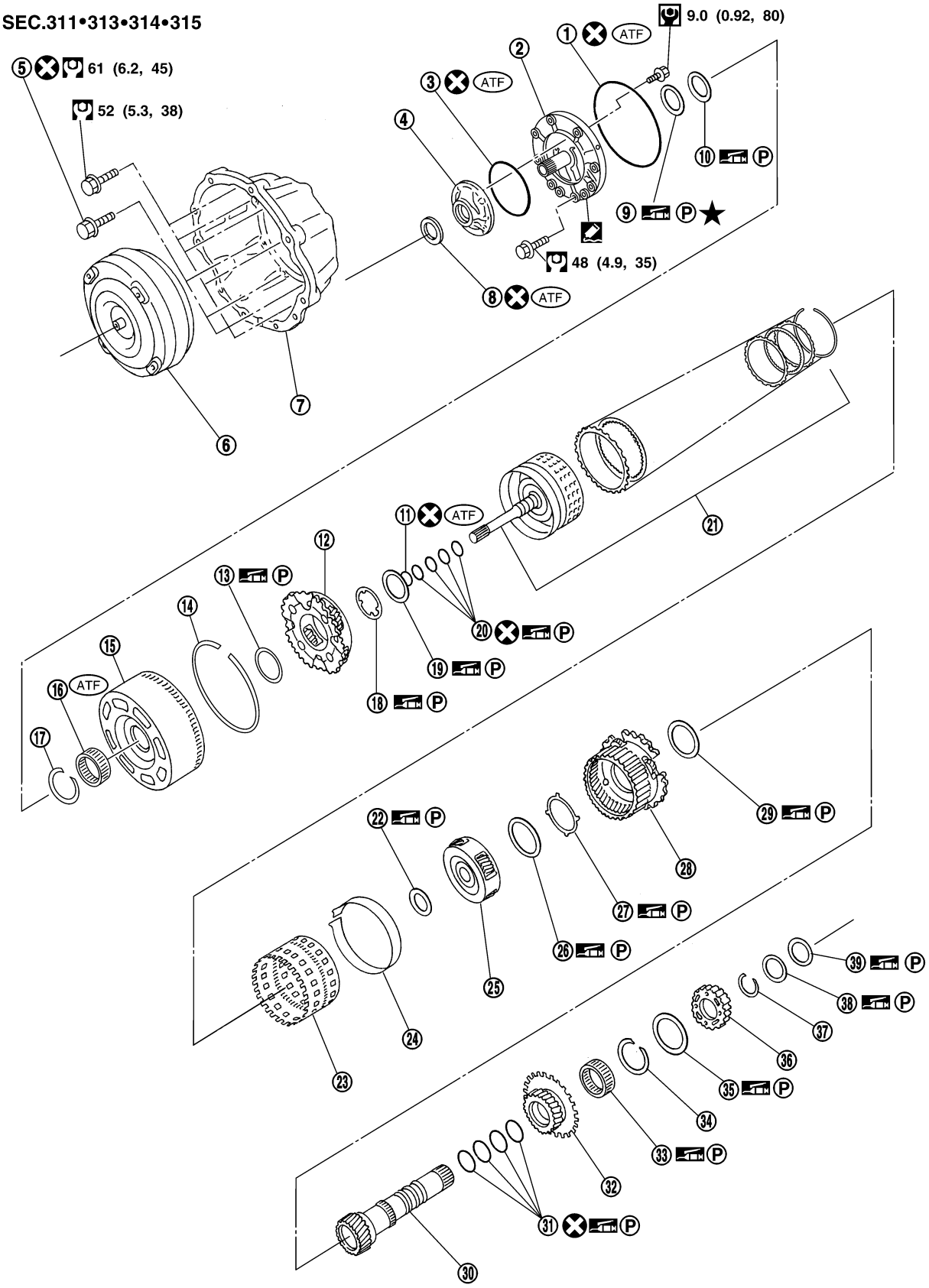

1. O-ring
2. Oil pump cover
3. O-ring
4. Oil pump housing
5. Self-sealing bolts
6. Torque converter
7. Converter housing
8. Oil pump housing oil seal
9. Bearing race
10. Needle bearing
11. O-ring
12. Front carrier assembly
13. Needle bearing
14. Snap ring
15. Front sun gear
16. 3rd one-way clutch
17. Snap ring
18. Bearing race
19. Needle bearing
20. Seal ring
21. Input clutch assembly
22. Needle bearing
23. Rear internal gear
24. Brake band
25. Mid carrier assembly
26. Needle bearing
27. Bearing race
28. Rear carrier assembly
29. Needle bearing
30. Mid sun gear
31. Seal ring
32. Rear sun gear
33. 1st one-way clutch
34. Snap ring
35. Needle bearing
36. High and low reverse clutch hub
37. Snap ring
38. Bearing race
39. Needle bearing

SEC.315•316

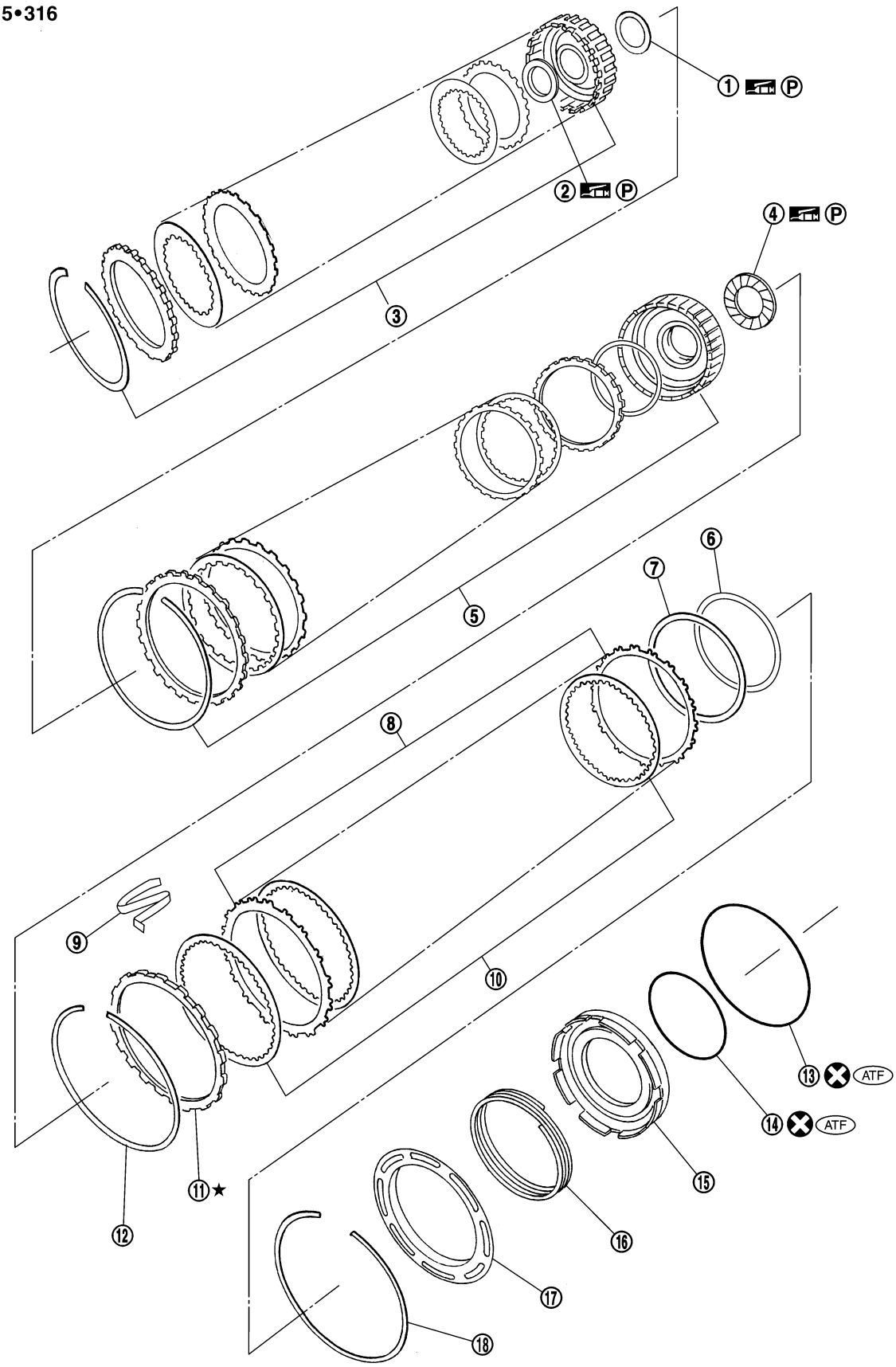

1. Needle bearing
2. Bearing race
3. High and low reverse clutch assembly
4. Needle bearing
5. Direct clutch assembly
6. Reverse brake dish plate
7. Reverse brake dish plate
8. Reverse brake driven plate
9. N-spring

10. Reverse brake drive plate
11. Reverse brake retaining plate
12. Snap ring
13. D-ring
14. D-ring
15. Reverse brake piston
16. Return spring
17. Spring retainer
18. Snap ring

2WD models

SEC.313 • 314 • 315 • 316 • 317 • 319

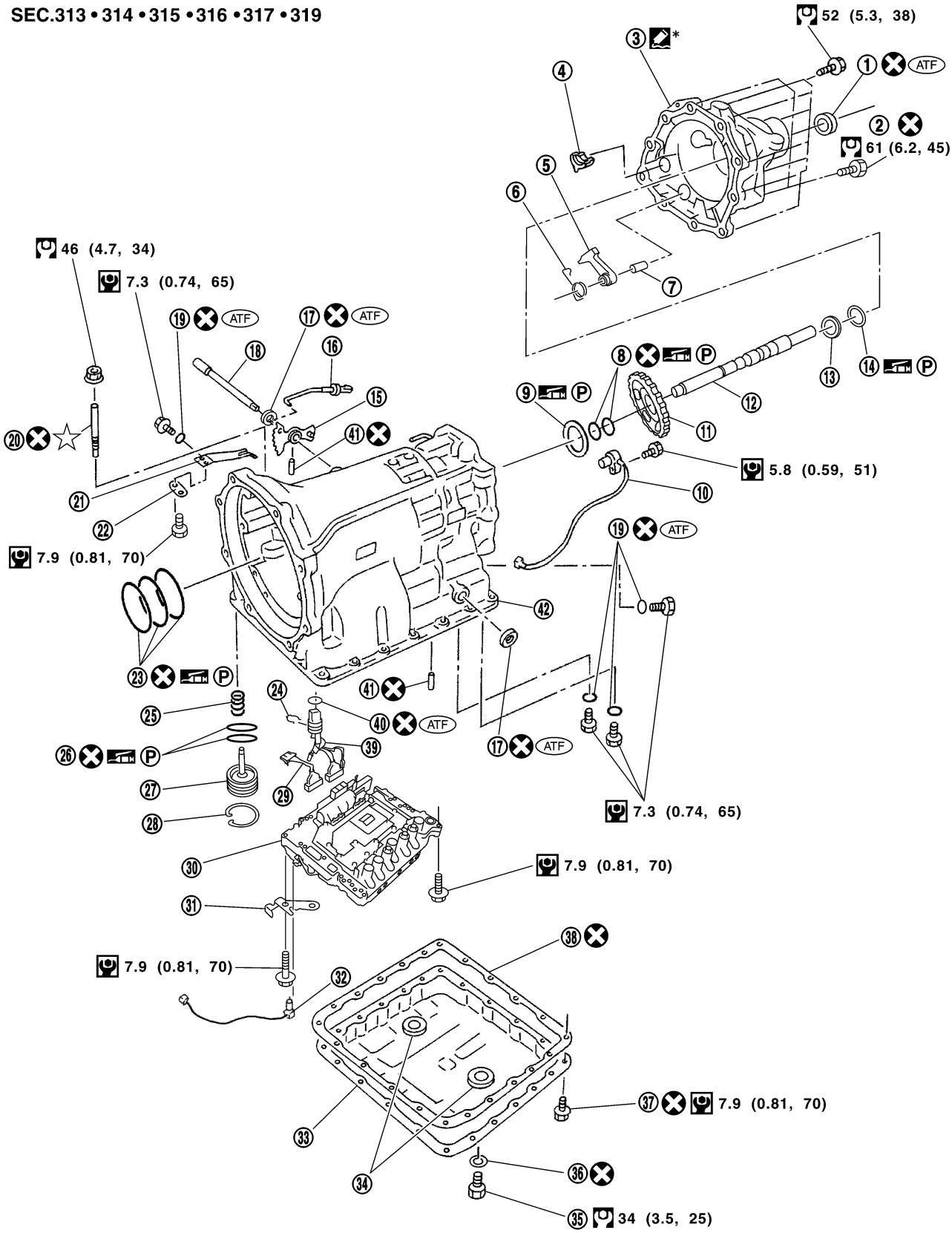

1. Rear oil seal
2. Self-sealing bolt
3. Rear extension
4. Parking actuator support
5. Parking pawl
6. Return spring

7. Pawl shaft
8. Seal ring
9. Needle bearing
10. Revolution sensor
11. Parking gear
12. Output shaft
13. Bearing race
14. Needle bearing
15. Manual plate
16. Parking rod
17. Manual shaft oil seal
18. Manual shaft
19. O-ring
20. Band servo anchor end pin
21. Detent spring
22. Spacer
23. Seal ring
24. Snap ring
25. Return spring
26. O-ring
27. Servo assembly
28. Snap ring
29. Sub-harness
30. Control valve with TCM
31. Bracket
32. A/T fluid temperature sensor 2
33. Oil pan
34. Magnet
35. Drain plug
36. Drain plug gasket
37. Oil pan bolt
38. Oil pan gasket
39. Terminal cord assembly
40. O-ring
41. Retaining pin
42. Transmission case

*: Apply Genuine Anaerobic Liquid Gasket or equivalent. Refer to GI-47, "Recommended Chemical Products and Sealants" .

4WD models

SEC.313 · 314 · 315 · 316 · 317 · 319

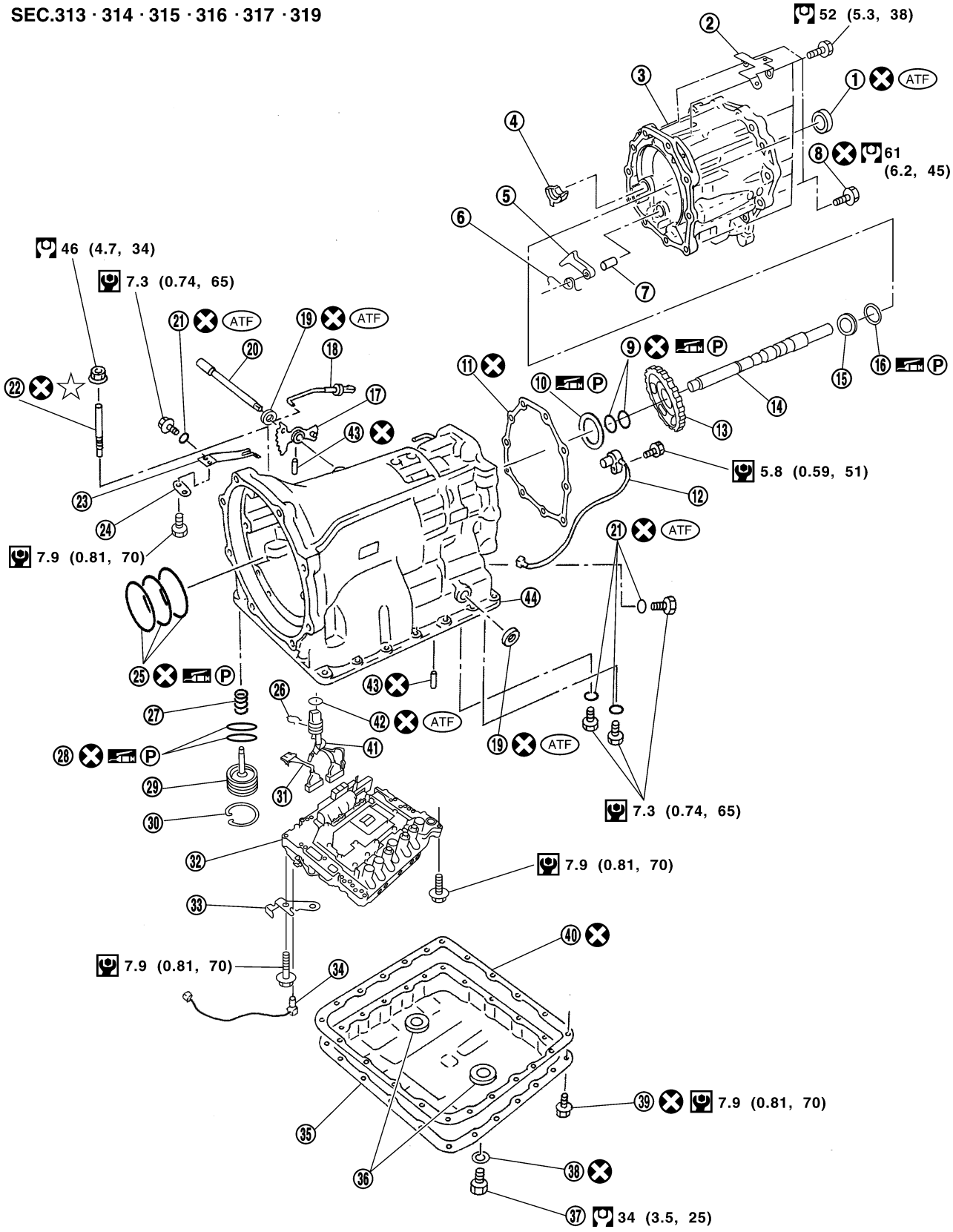

SCIA7218E

1. Rear oil seal
2. Bracket
3. Adapter case
4. Parking actuator support
5. Parking pawl
6. Return spring

7. Pawl shaft
8. Self-sealing bolt
9. Seal ring
10. Needle bearing
11. Gasket
12. Revolution sensor
13. Parking gear
14. Output shaft
15. Bearing race
16. Needle bearing
17. Manual plate
18. Parking rod
19. Manual shaft oil seal
20. Manual shaft
21. O-ring
22. Band servo anchor end pin
23. Detent spring
24. Spacer
25. Seal ring
26. Snap ring
27. Return spring
28. O-ring
29. Servo assembly
30. Snap ring
31. Sub-harness
32. Control valve with TCM
33. Bracket
34. A/T fluid temperature sensor 2
35. Oil pan
36. Magnet
37. Drain plug
38. Drain plug gasket
39. Oil pan bolt
40. Oil pan gasket
41. Terminal cord assembly
42. O-ring
43. Retaining pin
44. Transmission case

Oil Channel

ECS00EM0

2WD models

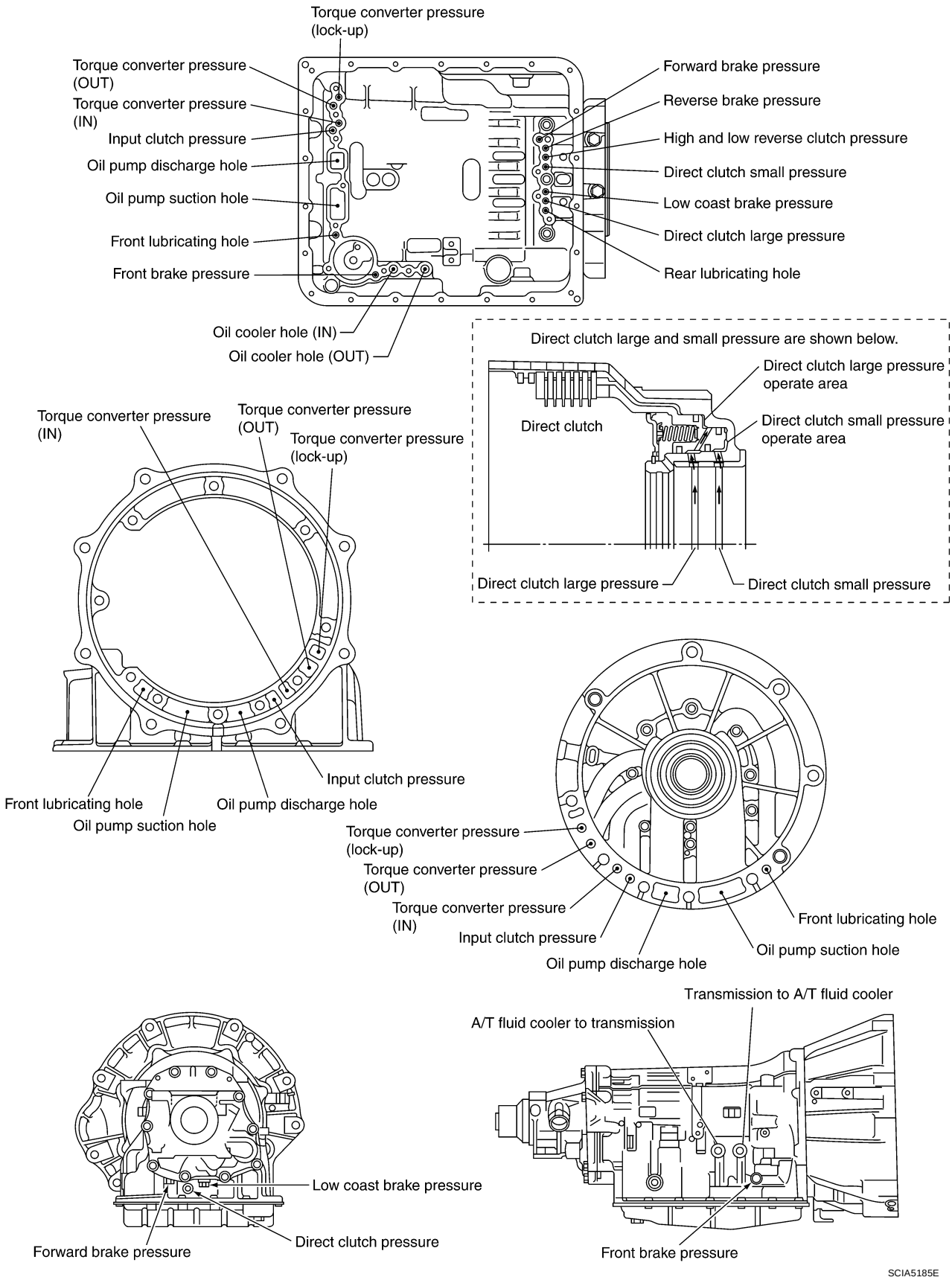

4WD models

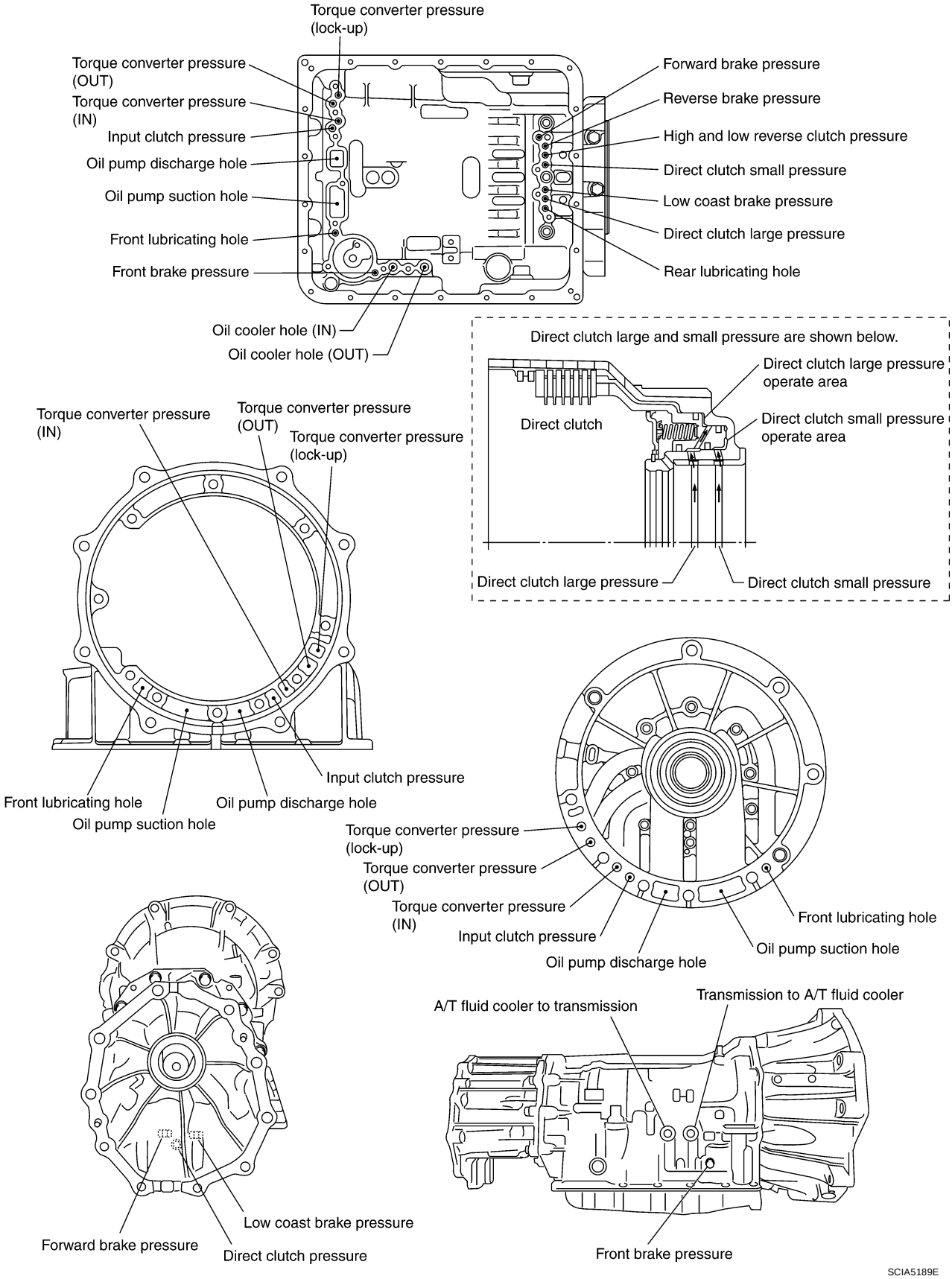
Torque converter pressure (lock-up)
Torque converter pressure (OUT)
Torque converter pressure (IN)
Input clutch pressure
Oil pump discharge hole
Oil pump suction hole
Front lubricating hole
Front brake pressure
Oil cooler hole (IN)
Oil cooler hole (OUT)
Forward brake pressure
Reverse brake pressure
High and low reverse clutch pressure
Direct clutch small pressure
Low coast brake pressure
Direct clutch large pressure
Rear lubricating hole
Direct clutch large and small pressure are shown below.
Direct clutch
Direct clutch large pressure operate area
Direct clutch small pressure operate area
Direct clutch large pressure
Direct clutch small pressure
Torque converter pressure (IN)
Torque converter pressure (OUT)
Torque converter pressure (lock-up)
Input clutch pressure
Front lubricating hole
Oil pump discharge hole
Oil pump suction hole
Torque converter pressure (lock-up)
Torque converter pressure (OUT)
Torque converter pressure (IN)
Input clutch pressure
Oil pump discharge hole
Front lubricating hole
Oil pump suction hole
A/T fluid cooler to transmission
Transmission to A/T fluid cooler
Low coast brake pressure
Forward brake pressure
Direct clutch pressure
Front brake pressure
SCIA5189E

Locations of Adjusting Shims, Needle Bearings, Thrust Washers and Snap Rings

ECS00EM1

2WD models

Outer diameter of snap rings

Item number	Outer diameter mm (in)
1	63 (2.48)
2	183 (7.20)
3	173 (6.81)
4	70 (2.76)
5	170 (6.69)
6	135 (5.31)
7	180 (7.09)
8	185 (7.28)
9	48 (1.89)

Outer diameter of needle bearings

Item number	Outer diameter mm (in)
10	80 (3.15)
11	77 (3.03)
12	77 (3.03)
13	47 (1.85)
14	84 (3.31)
15	80 (3.15)
16	92 (3.62)
17	60 (2.36)
18	63 (2.48)
19	92 (3.62)
20	65 (2.56)
22	60 (2.36)

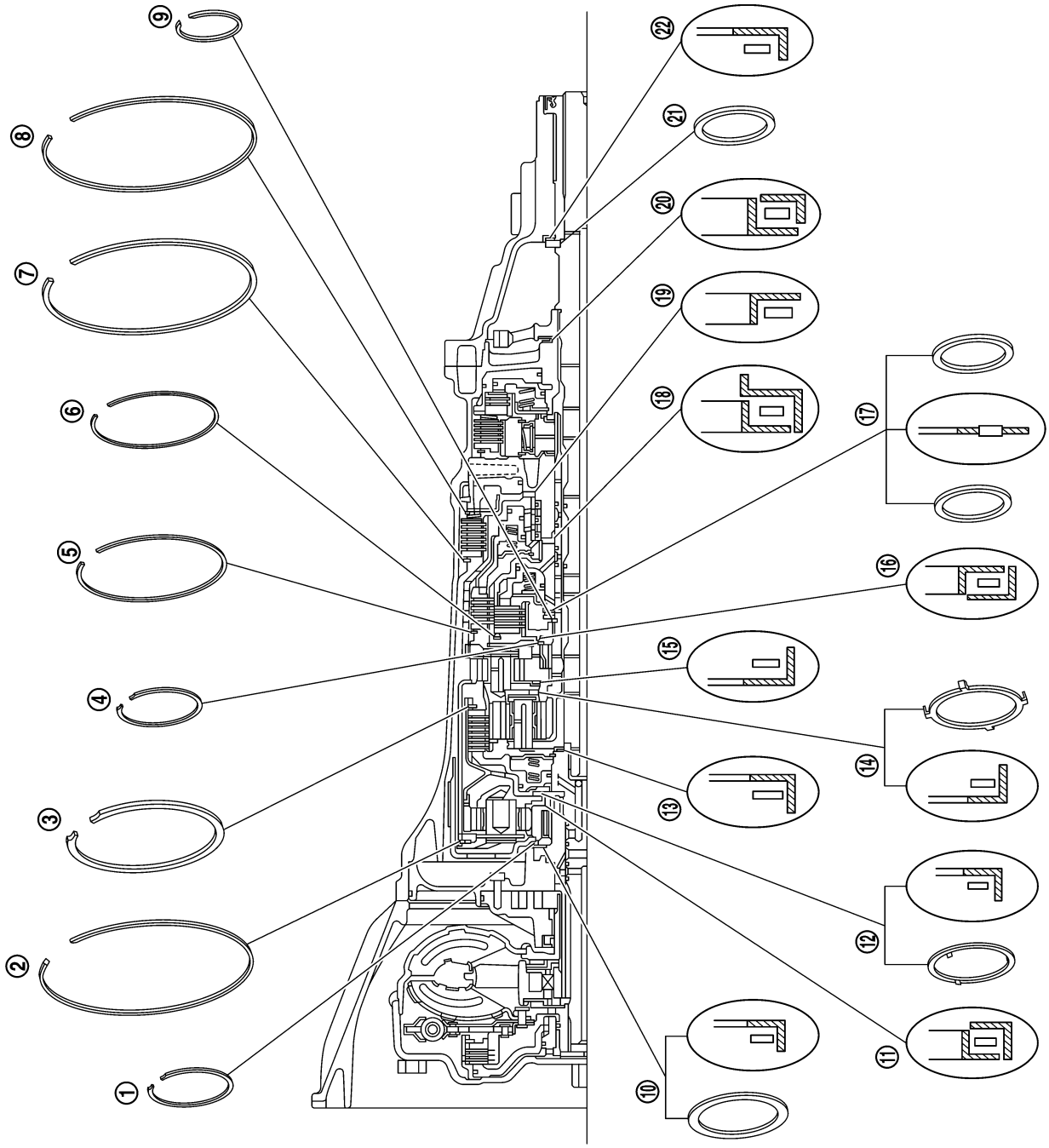

SCIA7019E

4WD models

Outer diameter of snap rings

Item number	Outer diameter mm (in)
1	63 (2.48)
2	183 (7.20)
3	173 (6.81)
4	70 (2.76)
5	170 (6.69)
6	135 (5.31)
7	180 (7.09)
8	185 (7.28)
9	48 (1.89)

Outer diameter of needle bearings

Item number	Outer diameter mm (in)
10	80 (3.15)
11	77 (3.03)
12	77 (3.03)
13	47 (1.85)
14	84 (3.31)
15	80 (3.15)
16	92 (3.62)
17	60 (2.36)
18	63 (2.48)
19	92 (3.62)
20	65 (2.56)
21	60 (2.36)

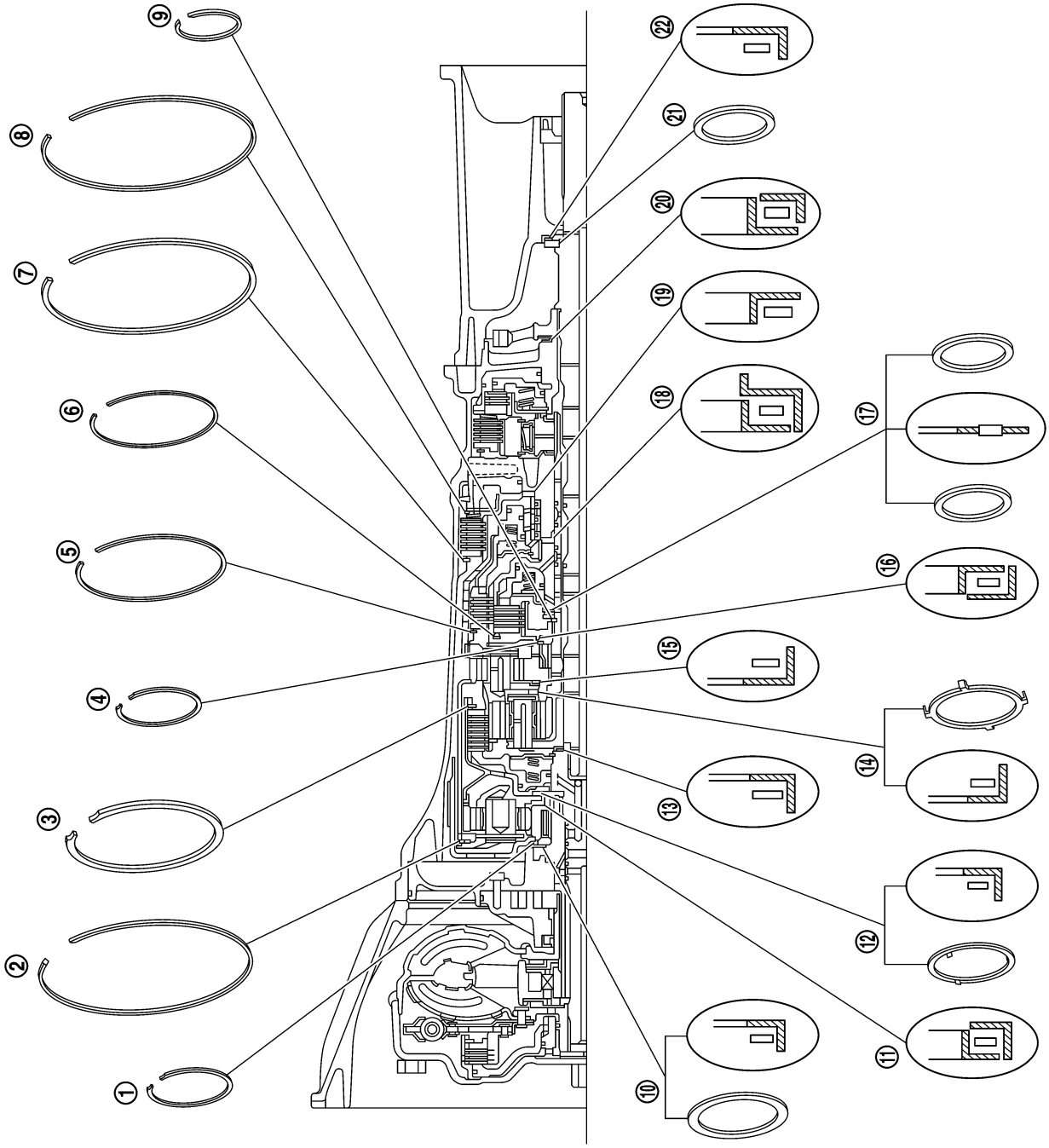

SCIA7020E

DISASSEMBLY

PFP:31020

Disassembly

ECS00EM2

CAUTION:
Do not disassemble parts behind Drum Support. Refer to AT-19, "Cross-Sectional View" .

1. Drain A/T fluid through drain plug.
2. Remove torque converter by holding it firmly and turing while pulling straight out.

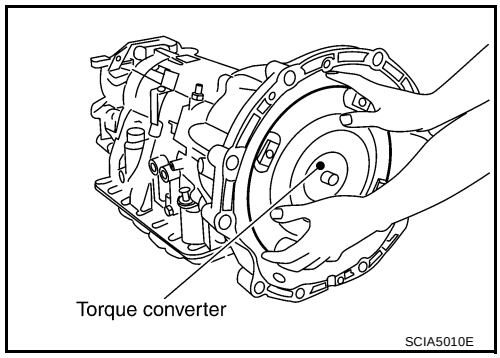

3. Check torque converter one-way clutch using a check tool as shown.
   a. Insert a check tool into the groove of bearing support built into one-way clutch outer race.
   b. While holding bearing support with a check tool, rotate one-way clutch spline using suitable tool.
   c. Make sure that inner race rotates clockwise only. If not, replace torque converter assembly.

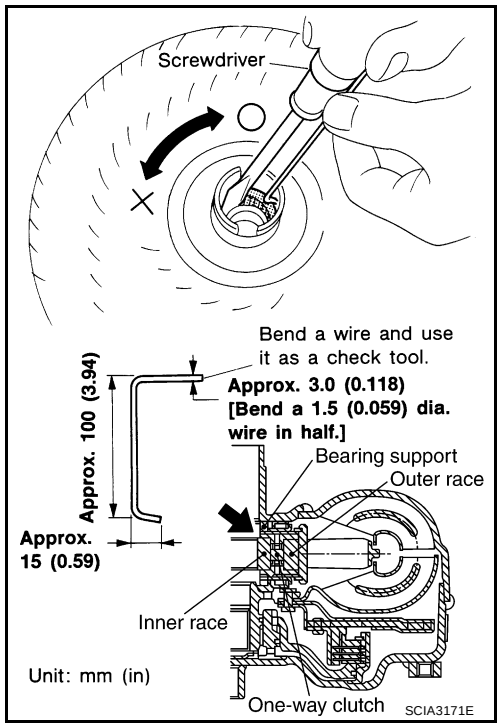

4. Remove bolts and converter housing from transmission case.

   CAUTION:
   Do not scratch converter housing.

   - Self-sealing bolt (A)

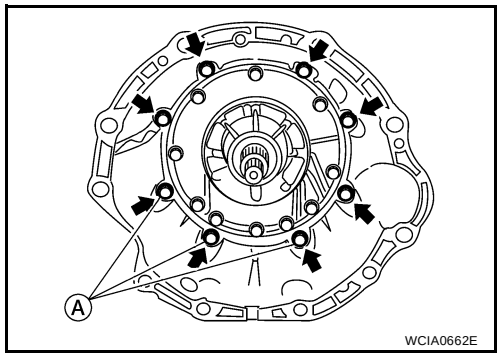

5. Remove O-ring from input clutch assembly.

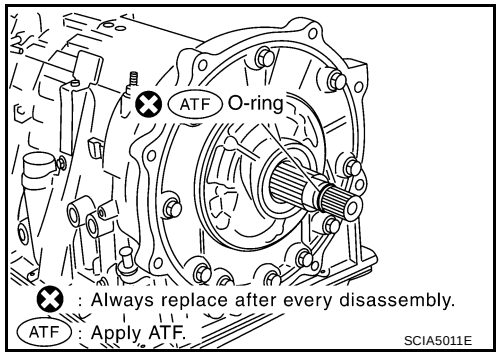

6. Remove oil pump assembly to transmission case bolts.

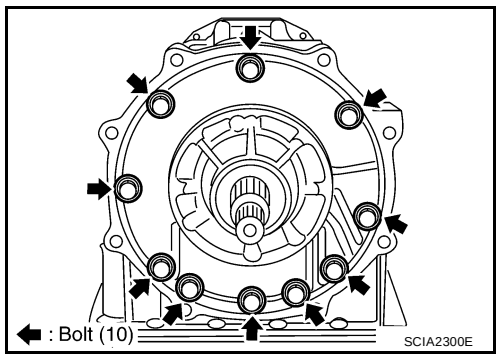

7. Remove the oil pump assembly evenly from the transmission case using Tools.

Tool number : ST25850000 (J-25721-A)

CAUTION:

- **Fully tighten the sliding hammer screws.**
- **Make sure that bearing race is installed to the oil pump assembly edge surface.**

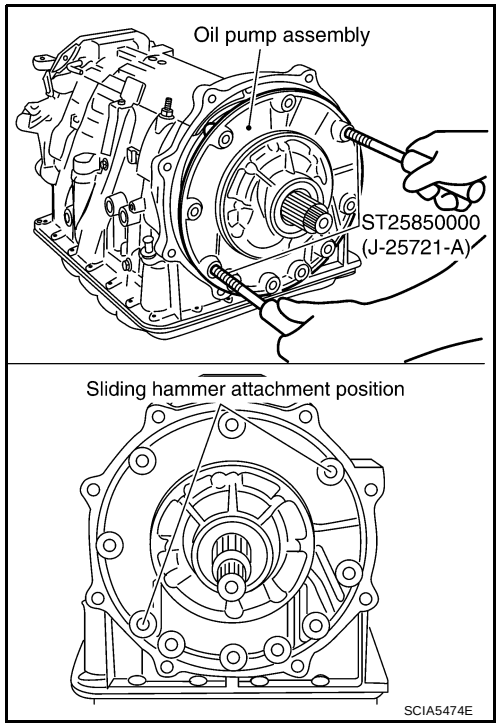

8. Remove O-ring from oil pump assembly.

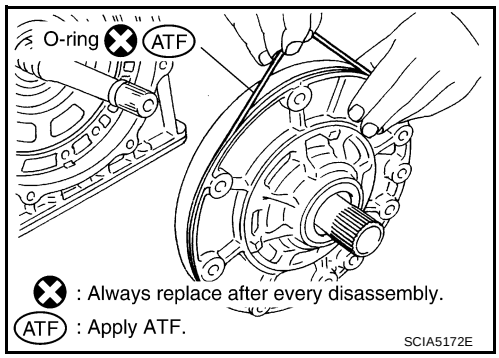

9. Remove bearing race from oil pump assembly.

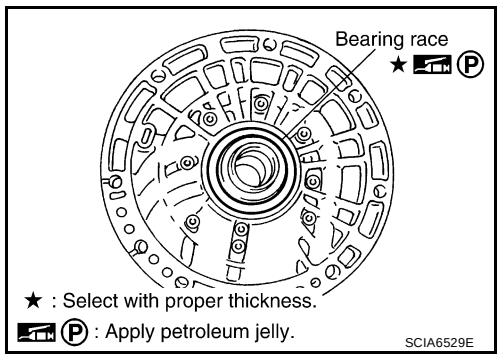

10. Remove needle bearing from front sun gear.

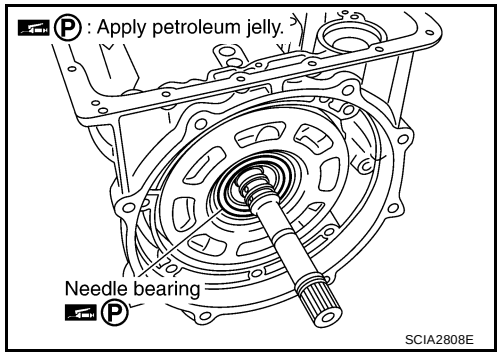

11. Remove front sun gear assembly from front carrier assembly.

NOTE:
Remove front sun gear by rotating it left and right.

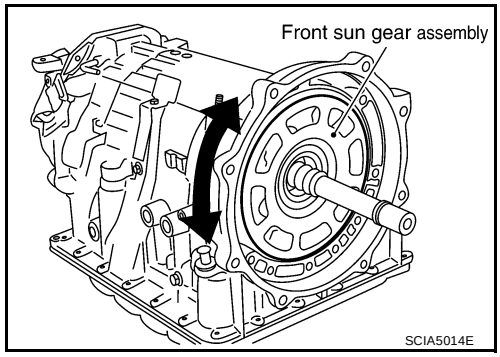

12. Remove seal rings from input clutch assembly.

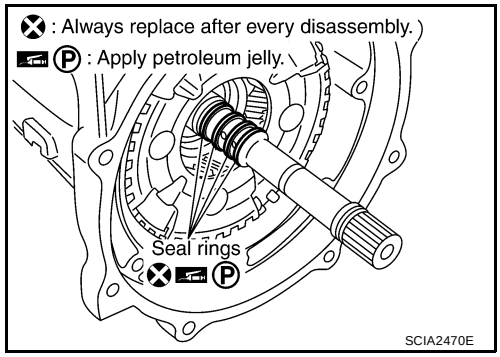

13. Remove front carrier assembly (with input clutch assembly and rear internal gear) from rear carrier assembly.

CAUTION:
Do not remove it with needle bearing.

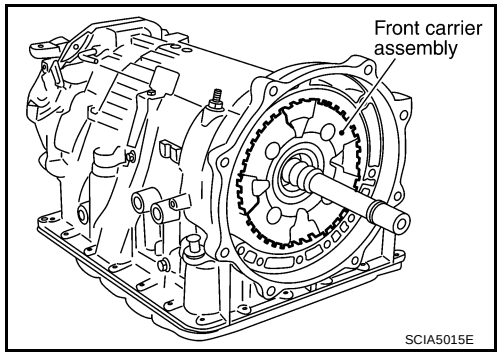

14. Loosen lock nut and remove band servo anchor end pin from transmission case.

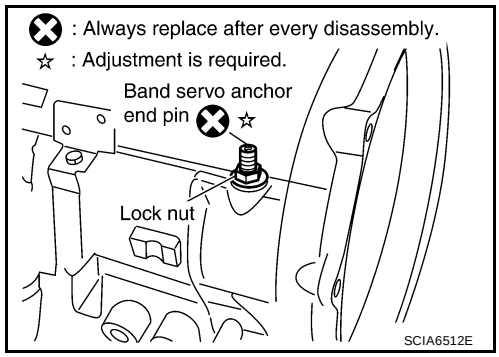

15. Remove brake band from transmission case.

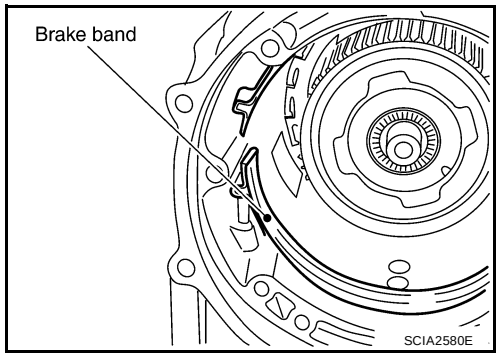

CAUTION:

- **To prevent brake linings from cracking or peeling, do not stretch the flexible band unnecessarily. When removing the brake band, always secure it with a clip as shown.**
- **Check brake band facing for damage, cracks, wear or burns.**

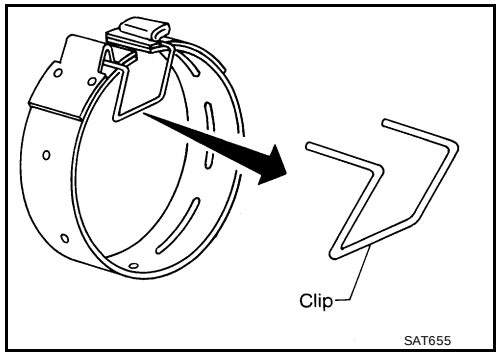

16. Remove mid carrier assembly and rear carrier assembly as a unit.

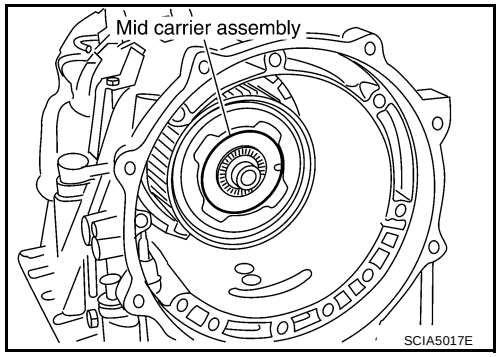

17. Remove mid carrier assembly from rear carrier assembly.

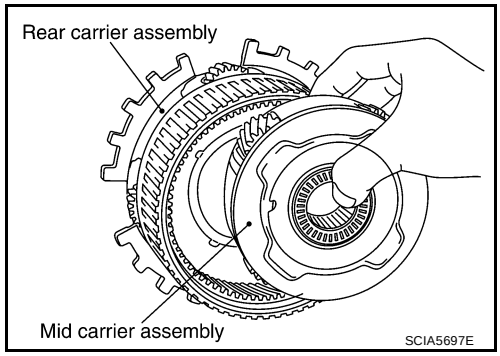

18. Remove needle bearing (front side) from mid carrier assembly.

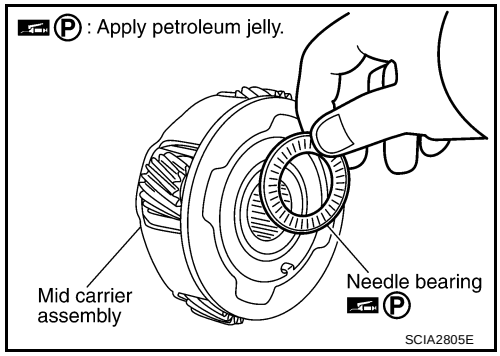

19. Remove needle bearing (rear side) from mid carrier assembly.

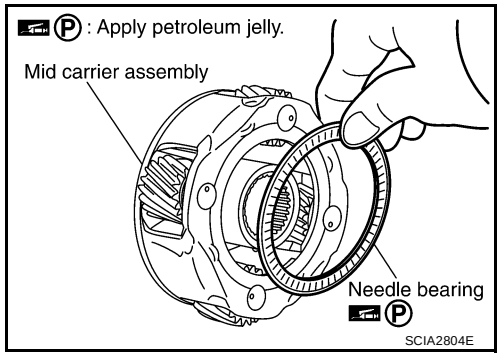

20. Remove bearing race from rear carrier assembly.

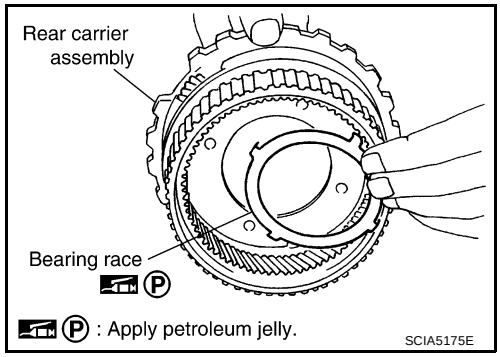

21. Remove needle bearing from rear carrier assembly.

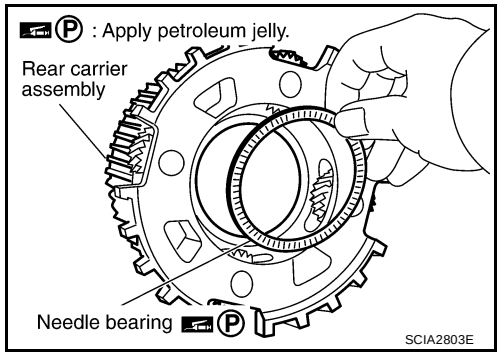

22. Remove mid sun gear assembly, rear sun gear assembly and high and low reverse clutch hub as a unit.

    CAUTION:
    Remove them with bearing race and needle bearing.

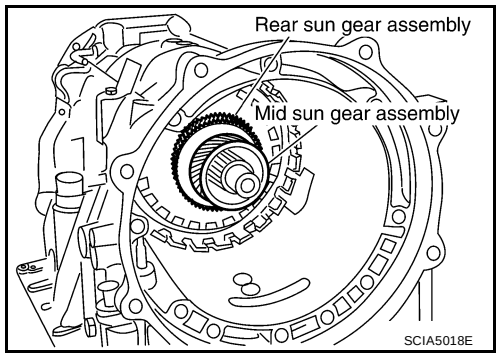

23. Remove high and low reverse clutch assembly from direct clutch assembly.

    CAUTION:
    Make sure that needle bearing is installed to the high and low reverse clutch assembly edge surface.

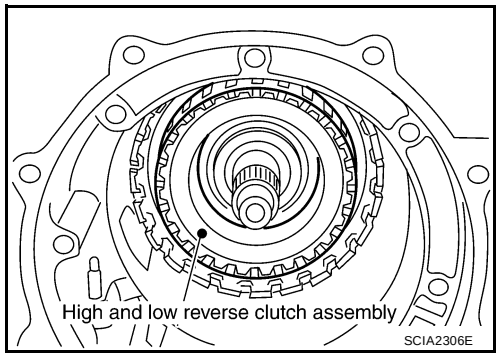

24. Remove needle bearing from drum support.

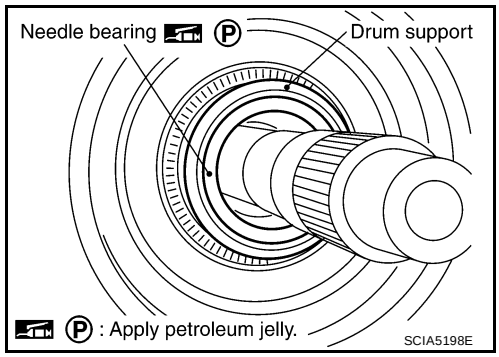

25. Remove direct clutch assembly from reverse brake.

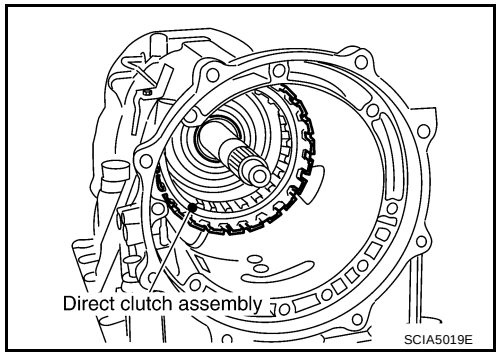

26. Remove snap ring from A/T assembly harness connector.

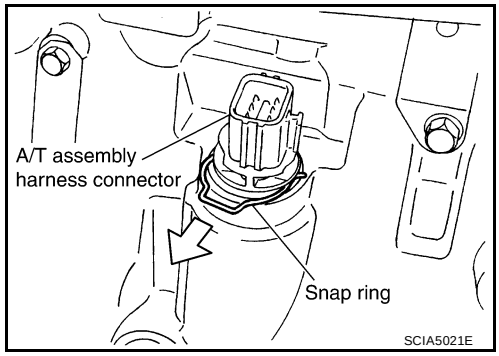

27. Push A/T assembly harness connector.

CAUTION:
Do not damage connector.

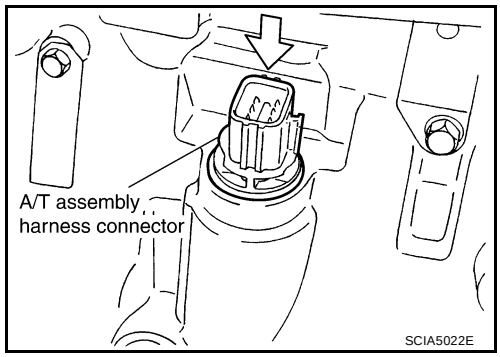

28. Remove oil pan and oil pan gasket.

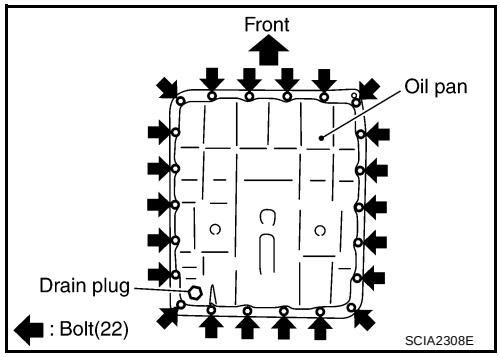

29. Check foreign materials in oil pan to help determine causes of malfunction. If the A/T fluid is very dark, smells burned, or contains foreign particles, the frictional material (clutches, band) may need replacement. A tacky film that will not wipe clean indicates varnish build up. Varnish can cause valves, servo, and clutches to stick and can inhibit pump pressure.
   - **If frictional material is detected, perform A/T fluid cooler cleaning. Refer to AT-16, "A/T Fluid Cooler Cleaning" .**

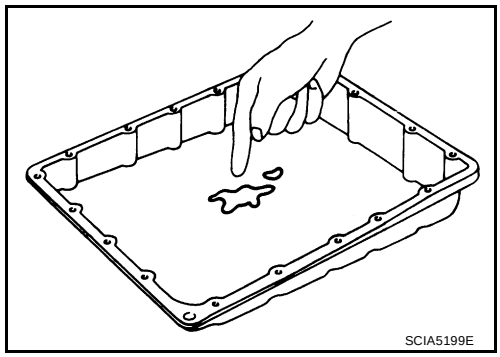

30. Remove magnets from oil pan.

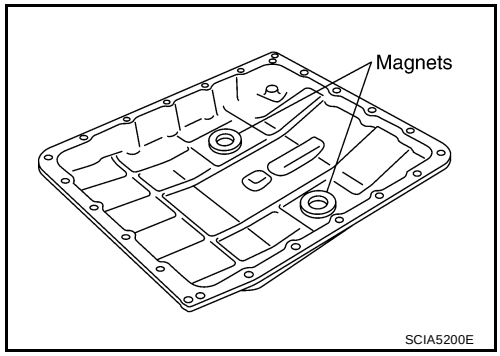

31. Straighten terminal clips to free terminal cord assembly and A/T fluid temperature sensor 2 harness.
32. Disconnect A/T fluid temperature sensor 2 connector.

CAUTION:
Do not damage connector.

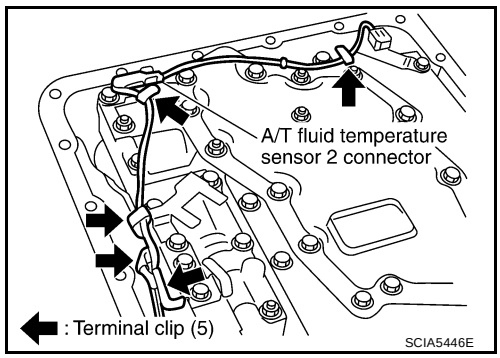

33. Straighten terminal clip to free revolution sensor harness.
34. Disconnect revolution sensor connector.

CAUTION:
Do not damage connector.

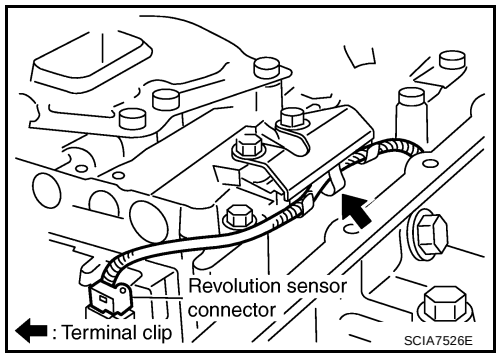

35. Remove bolts (A), (B) and (C) from control valve with TCM.

Bolt symbol	Length mm (in)	Number of bolts
A	42 (1.65)	5
B	55 (2.17)	6
C	40 (1.57)	1

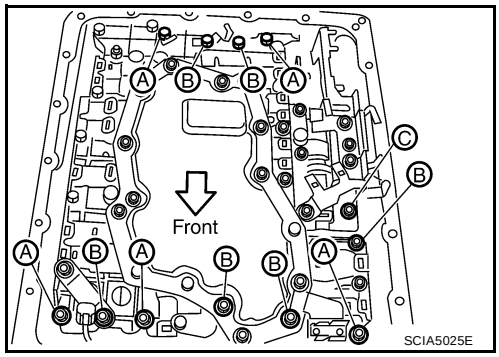

36. Remove control valve with TCM from transmission case.

CAUTION:
When removing, be careful with the manual valve notch and manual plate height. Remove it vertically.

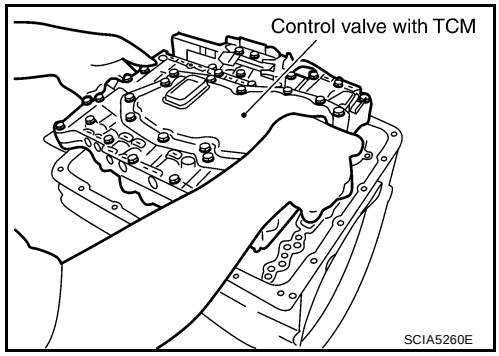

37. Remove A/T fluid temperature sensor 2 with bracket from control valve with TCM.

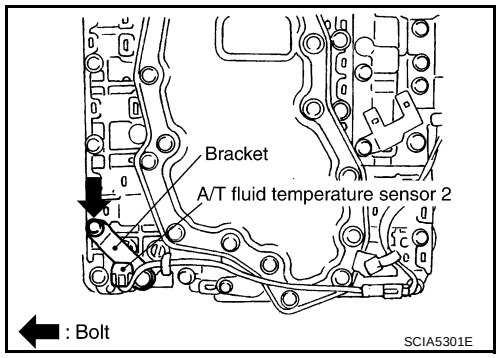

38. Remove bracket from A/T fluid temperature sensor 2.

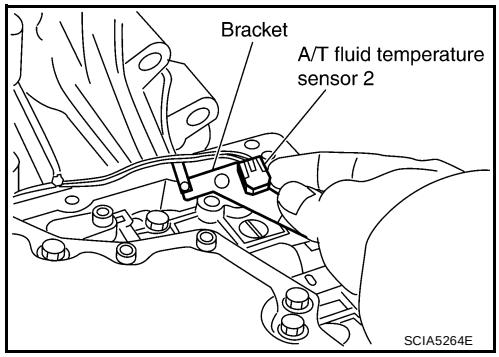

39. Remove O-ring from A/T assembly harness connector.

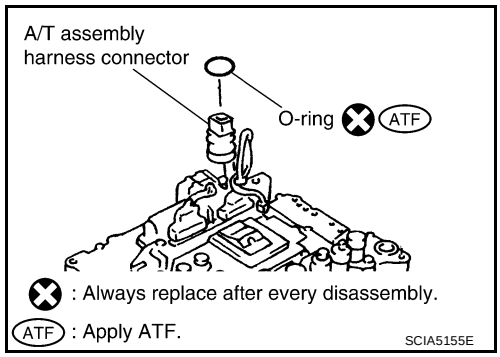

40. Disconnect TCM connectors.

CAUTION:
Do not damage connectors.

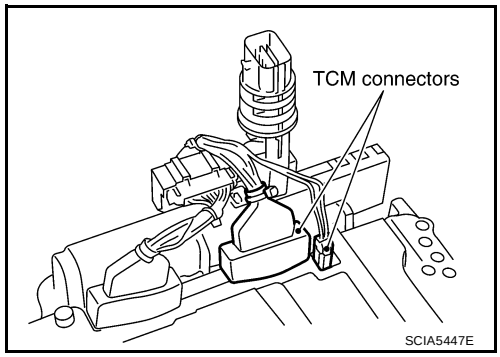

41. Remove A/T assembly harness connector from control valve with TCM using suitable tool.

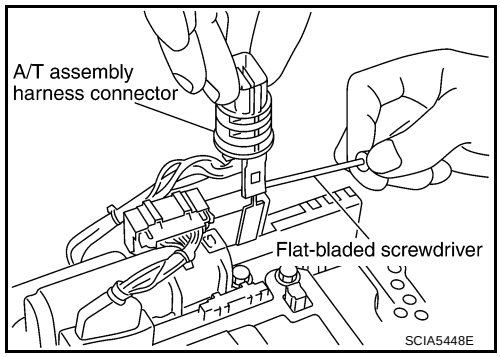

42. Disconnect TCM connector and park/neutral position switch connector.

CAUTION:
Do not damage connectors.

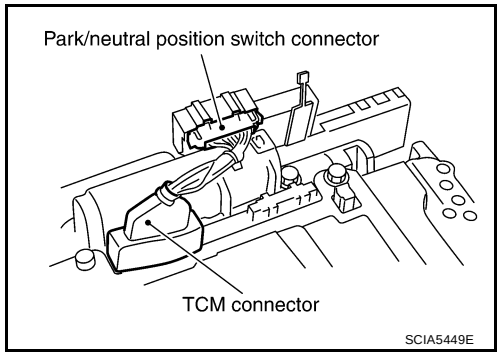

43. Remove rear extension assembly (2WD models) or adapter case assembly (4WD models) according to the following procedures.

a. **2WD models**

i. Remove rear extension assembly to transmission case bolts.

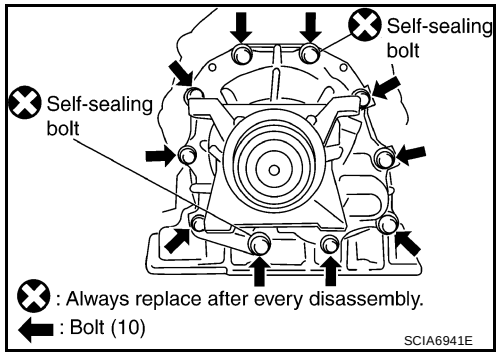

ii. Tap rear extension assembly with soft hammer.

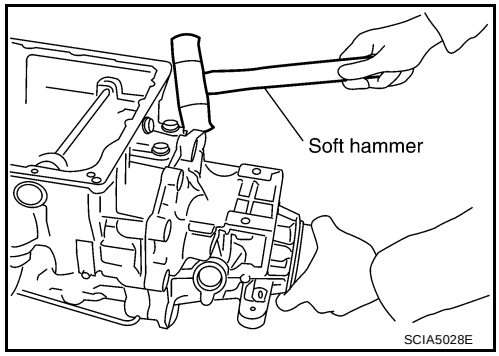

iii. Remove rear extension assembly (with needle bearing) from transmission case.

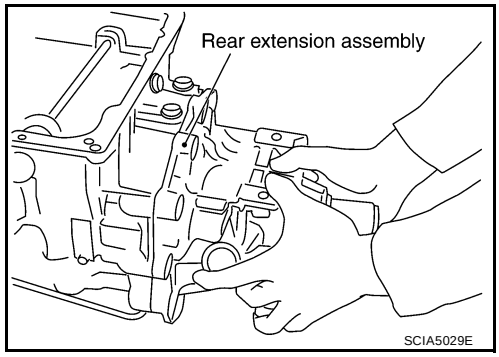

b. **4WD models**

i. Remove adapter case to transmission case bolts (1) and terminal bracket (2).

- Self-sealing bolt (3)

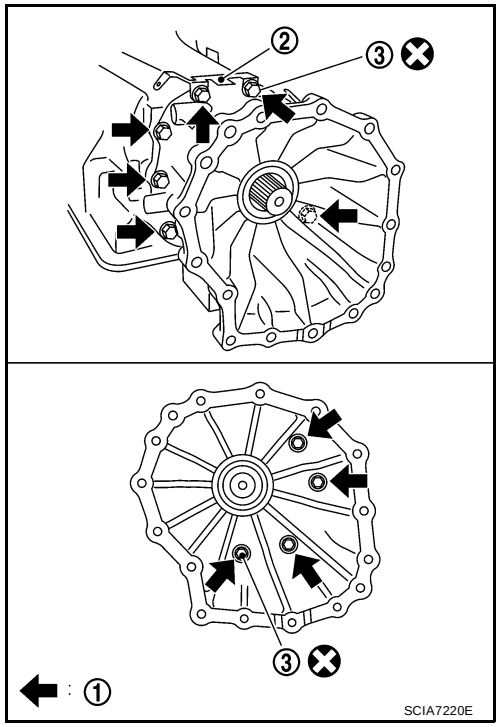

ii. Tap adapter case assembly using suitable tool.

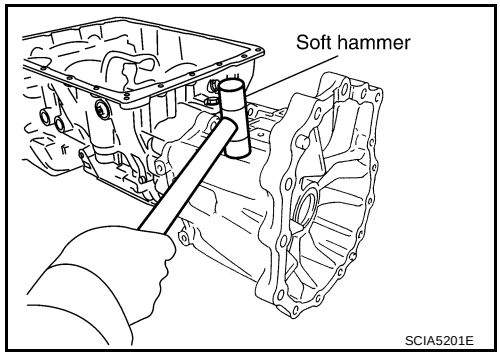

iii. Remove adapter case assembly (with needle bearing) from transmission case.

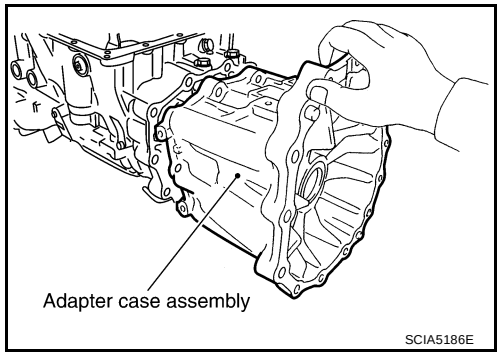

iv. Remove gasket from transmission case.

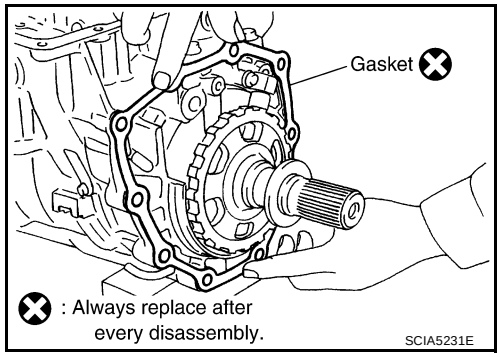

44. Remove bearing race from output shaft.

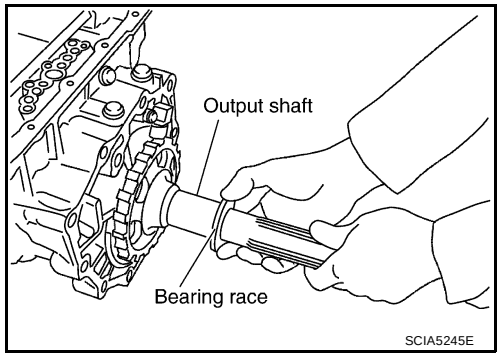

45. Remove output shaft from transmission case by rotating left and right.

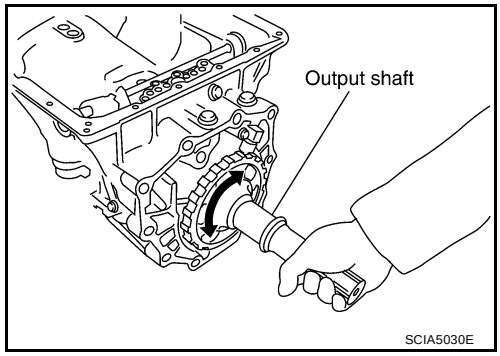

46. Remove parking gear from output shaft.

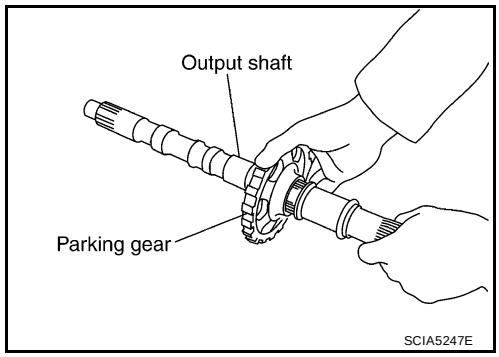

47. Remove seal rings from output shaft.

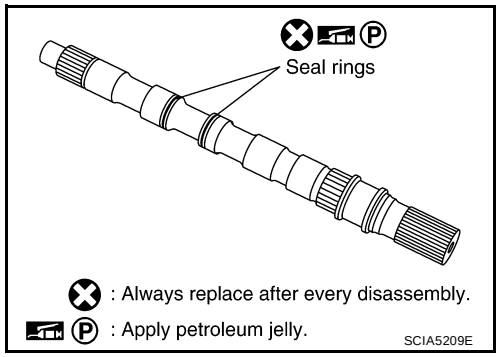

48. Remove needle bearing from transmission case.

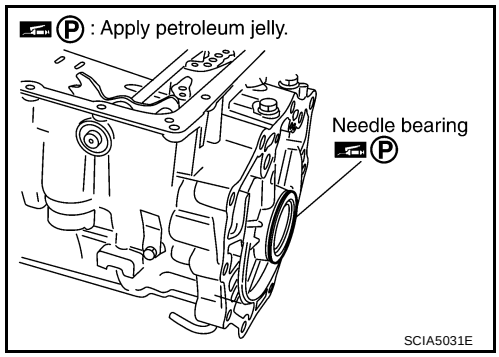

49. Remove revolution sensor from transmission case.

CAUTION:

- **Do not subject it to impact by dropping or hitting it.**
- **Do not disassemble.**
- **Do not allow metal filings or any foreign material to get on the sensor's front edge magnetic area.**
- **Do not place in an area affected by magnetism.**

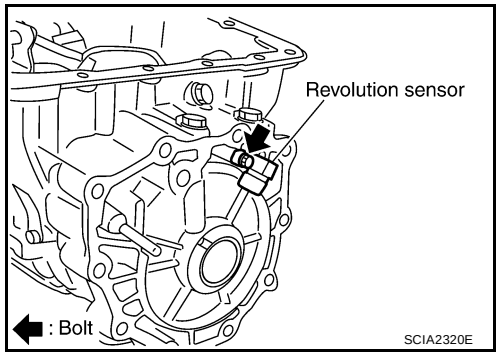

50. Remove reverse brake snap ring using two flat-bladed screwdrivers.

NOTE:
Press out snap ring from the transmission case oil pan side gap using a flat-bladed screwdriver, and remove it using a another screwdriver.

51. Remove reverse brake retaining plate from transmission case.
    - Check facing for burns, cracks or damage. If necessary, replace the plate.

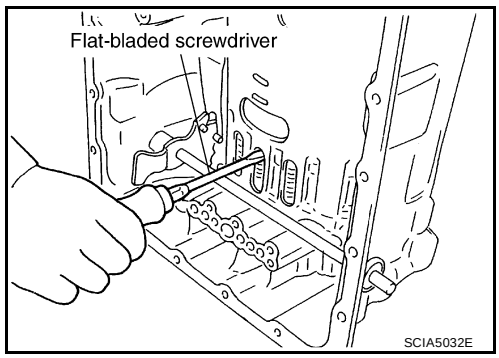

52. Remove N-spring from transmission case.

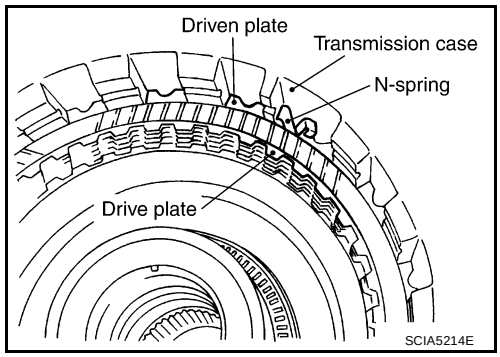

53. Remove reverse brake drive plates, driven plates and dish plate from transmission case.
    - **Check facing for burns, cracks or damage. If necessary, replace the plate.**

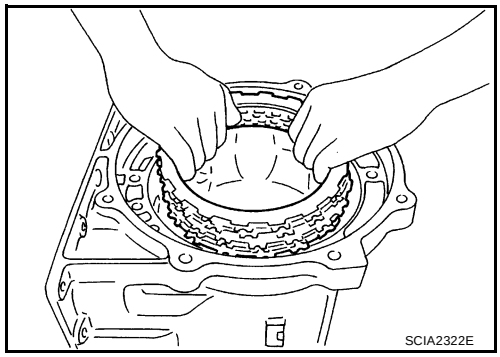

54. Remove snap ring using suitable tool.

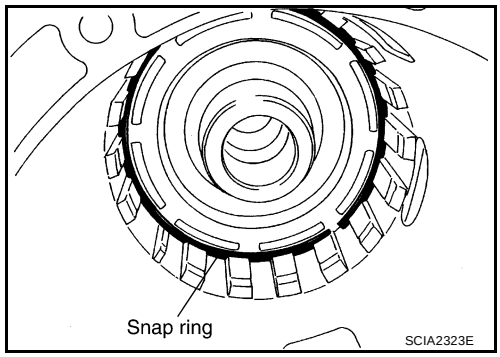

55. Remove spring retainer and return spring from transmission case.

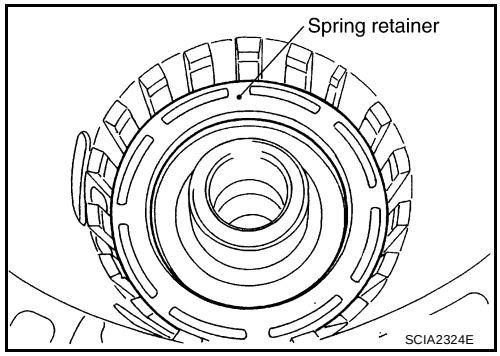

56. Remove seal rings from drum support.

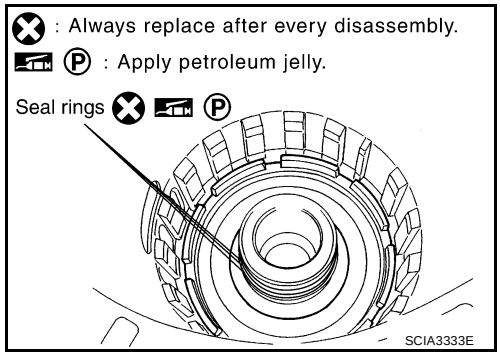

57. Remove needle bearing from drum support edge surface.

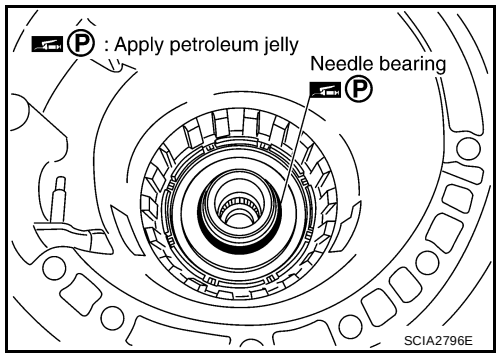

58. Remove reverse brake piston from transmission case using compressed air. Refer to AT-255, "Oil Channel" .

CAUTION:
Care should be taken not to abruptly blow air. It makes the piston incline, and as a result, it becomes hard to disassemble the pistons.

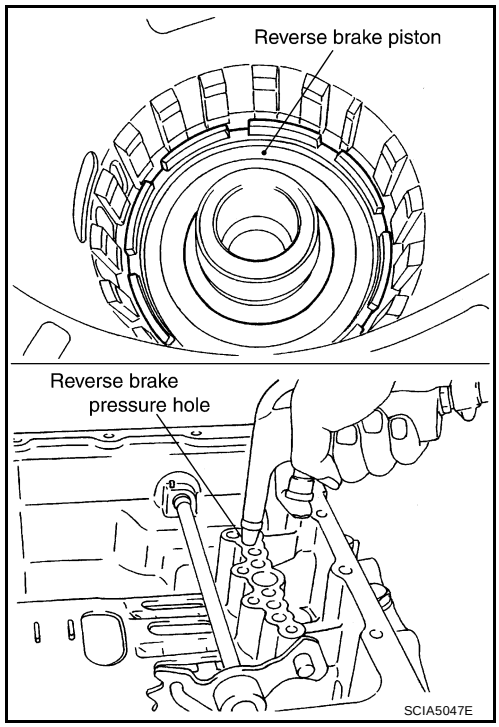

59. Remove D-rings from reverse brake piston.

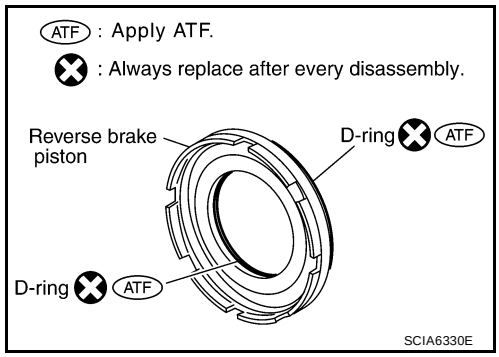

60. Knock out retaining pin using suitable tool.

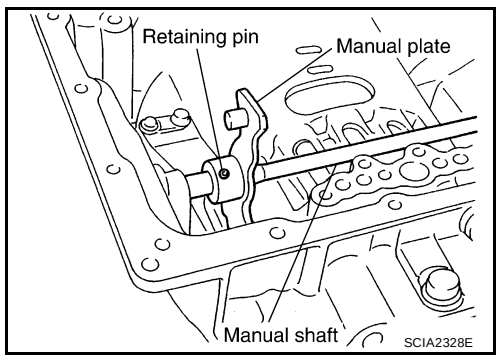

61. Remove manual shaft retaining pin using suitable tool.

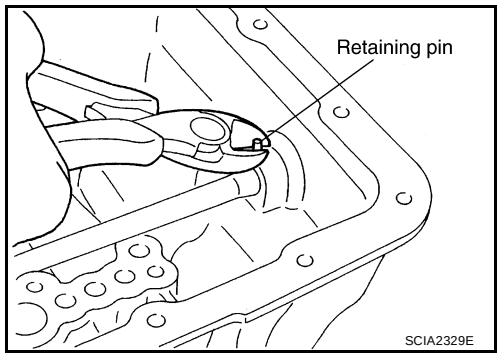

62. Remove manual plate (with parking rod) from manual shaft.

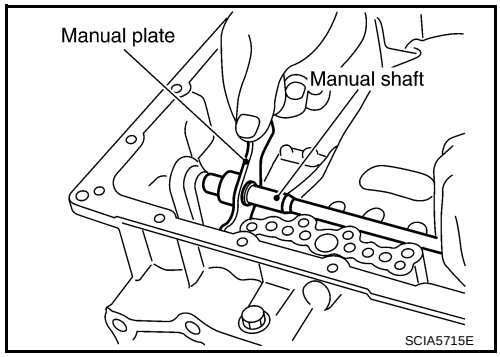

63. Remove parking rod from manual plate.

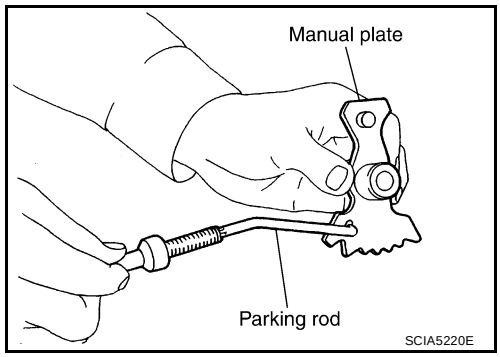

64. Remove manual shaft from transmission case.

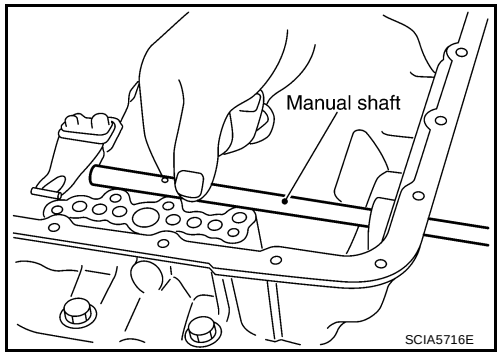

65. Remove manual shaft oil seals using suitable tool.

CAUTION:

Do not scratch transmission case.

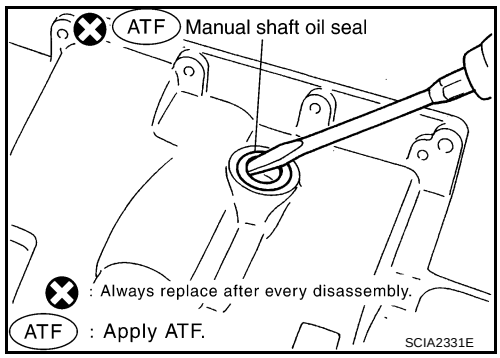

66. Remove detent spring and spacer from transmission case.

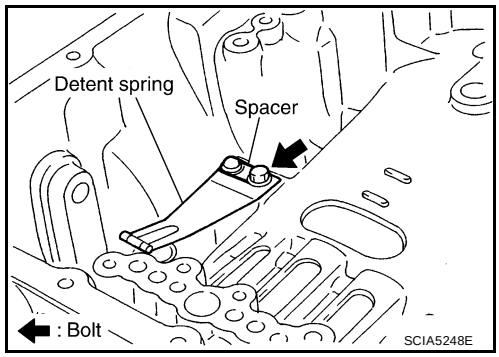

67. Remove snap ring from transmission case using suitable tool.

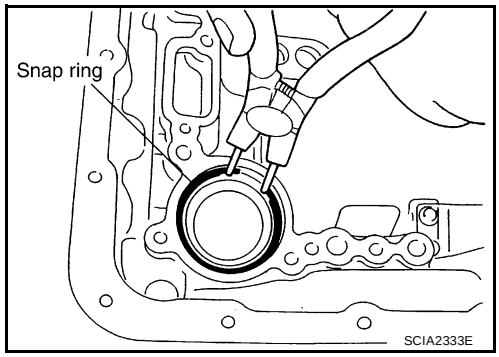

68. Remove servo assembly (with return spring) from transmission case.

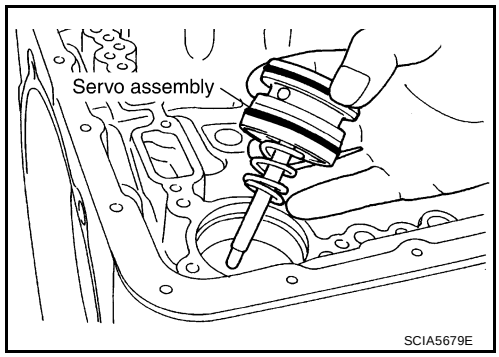

69. Remove return spring from servo assembly.

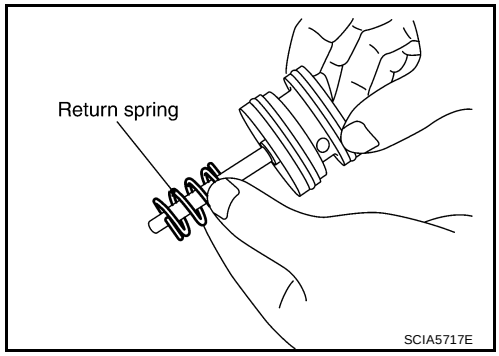

70. Remove O-rings from servo assembly.

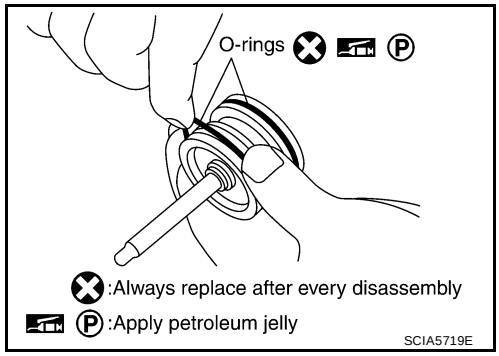

71. Remove needle bearing (1) from rear extension (2WD models) or adapter case (4WD models).

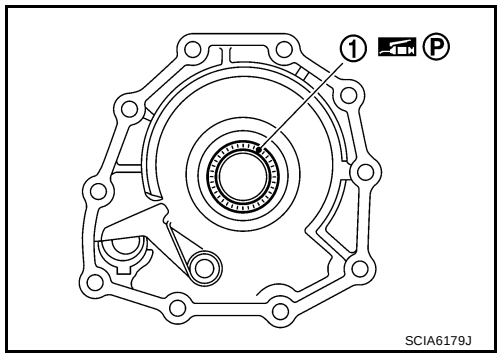

72. Remove parking actuator support from rear extension (2WD models) or adapter case (4WD models).

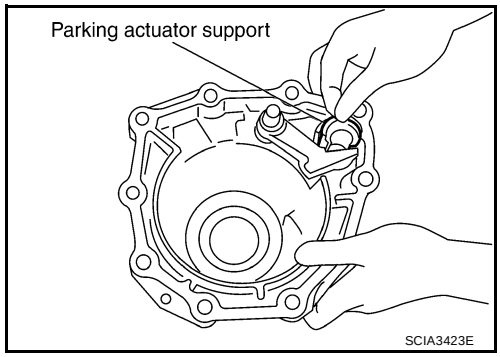

73. Remove parking pawl (with return spring) and pawl shaft from rear extension (2WD models) or adapter case (4WD models).

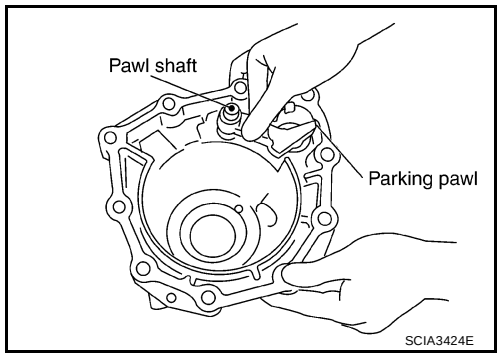

74. Remove return spring (1) from parking pawl (2).

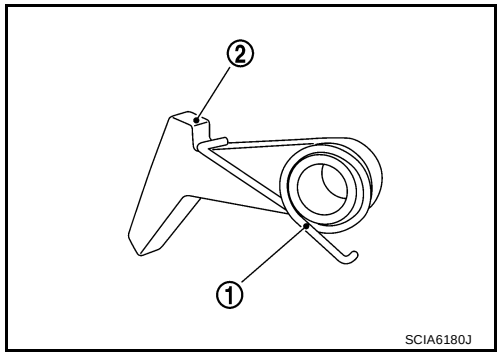

75. Remove rear oil seal from rear extension (2WD models) or adapter case (4WD models) using suitable tool.

    CAUTION:
    Do not scratch rear extension (2WD models) or adapter case (4WD models).

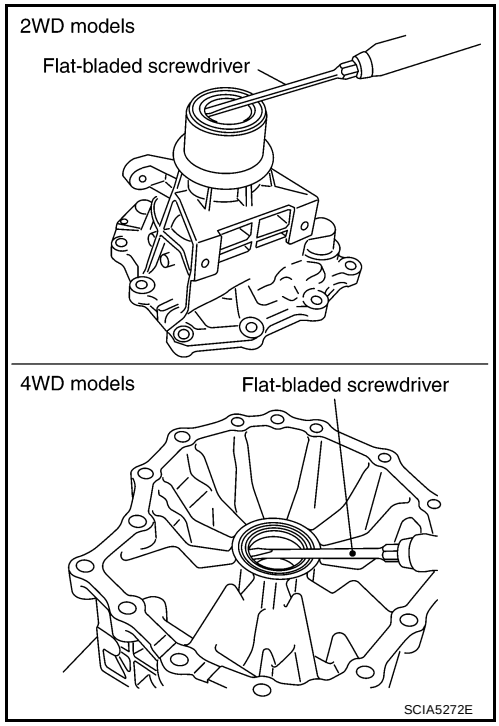

REPAIR FOR COMPONENT PARTS

PFP:00000

Oil Pump

ECS00EM3

COMPONENTS

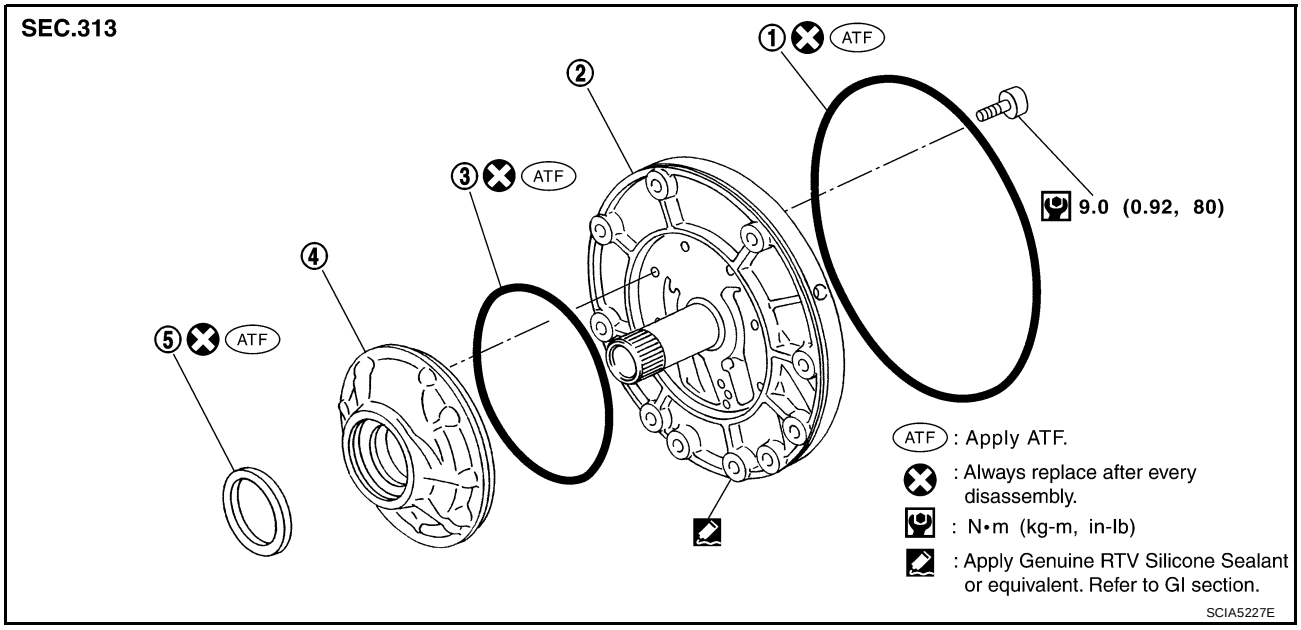

1. O-ring
2. Oil pump cover
3. O-ring
4. Oil pump housing
5. Oil pump housing oil seal

DISASSEMBLY

1. Remove oil pump housing from oil pump cover.

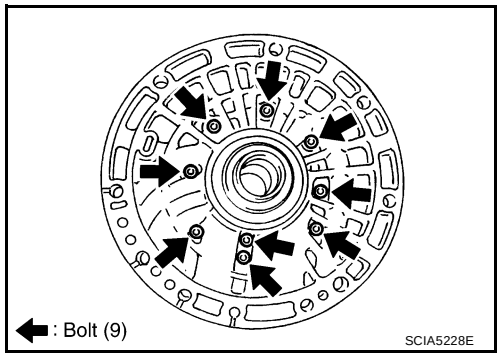

2. Remove oil pump housing oil seal using suitable tool.

CAUTION:
Do not scratch oil pump housing.

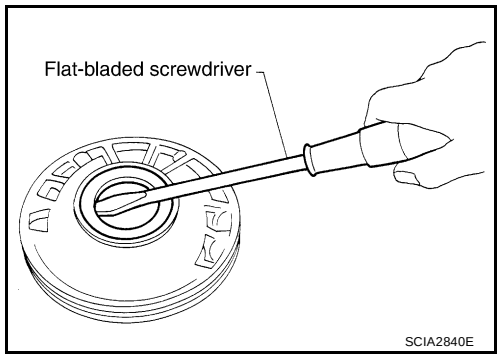

3. Remove O-ring from oil pump housing.

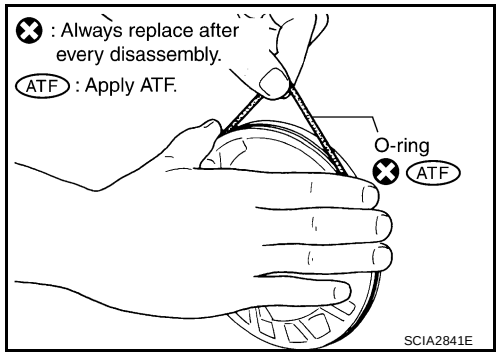

4. Remove O-ring from oil pump cover.

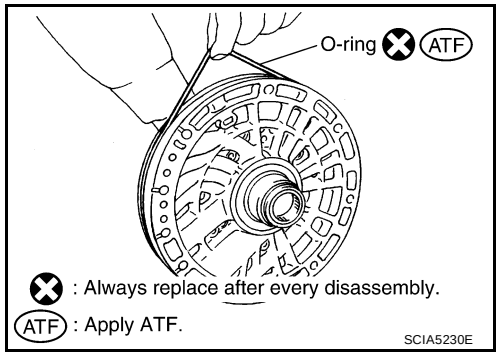

ASSEMBLY

1. Install O-ring to oil pump cover.

   CAUTION:
   - **Do not reuse O-ring.**
   - **Apply ATF to O-ring.**

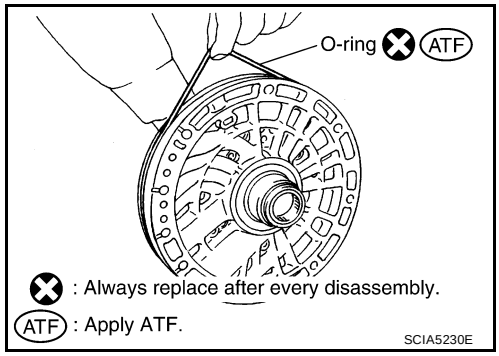

2. Install O-ring to oil pump housing.

   CAUTION:
   - **Do not reuse O-ring.**
   - **Apply ATF to O-ring.**

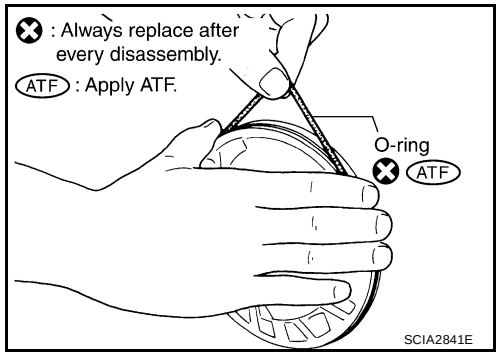

3. Install oil pump housing oil seal to the oil pump housing until it is flush using Tool.

   Tool number : ST33400001 (J-26082)

   CAUTION:
   - **Do not reuse oil seal.**
   - **Apply ATF to oil seal.**

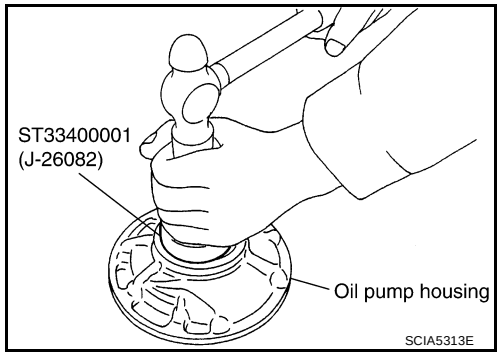

4. After temporarily tightening the bolts for the oil pump housing to the oil pump cover, tighten them to the specified torque in the sequence shown.

   Oil pump housing bolts : 9.0 N·m (0.92 kg-m, 80 in-lb.)

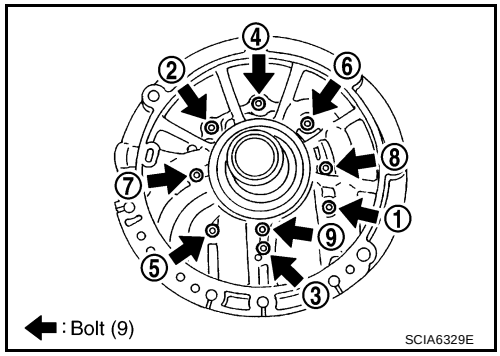

Front Sun Gear, 3rd One-Way Clutch

ECS00EM4

COMPONENTS

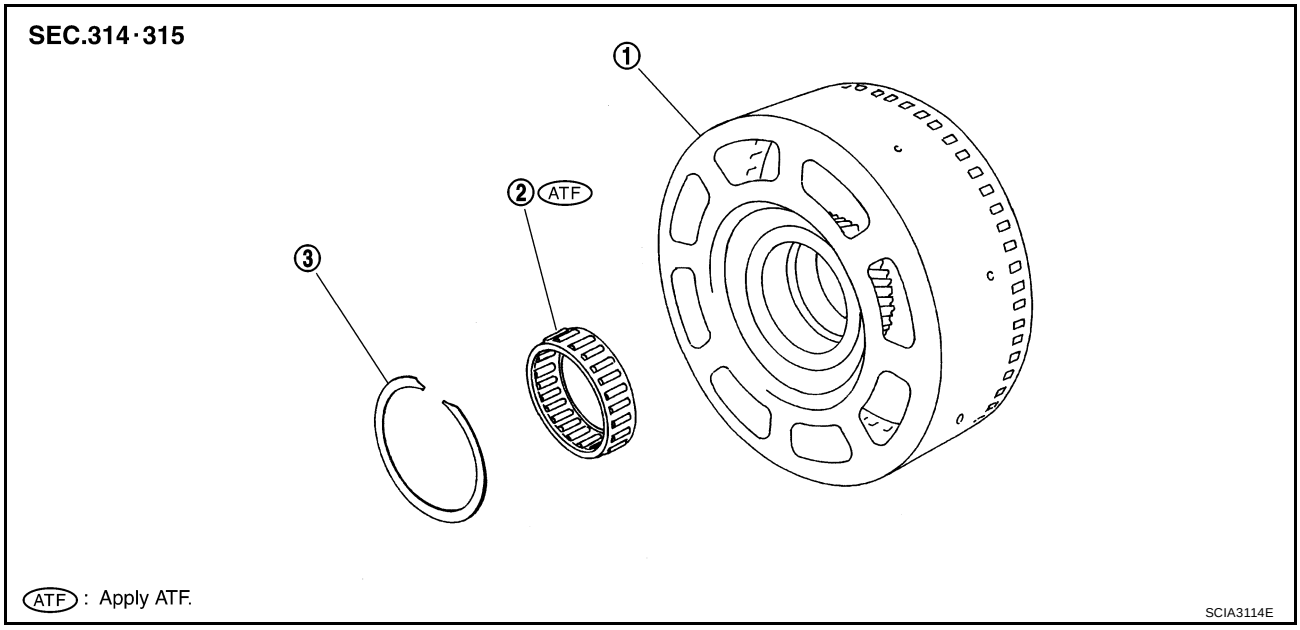

1. Front sun gear
2. 3rd one-way clutch
3. Snap ring

DISASSEMBLY

1. Remove snap ring from front sun gear using suitable tool.

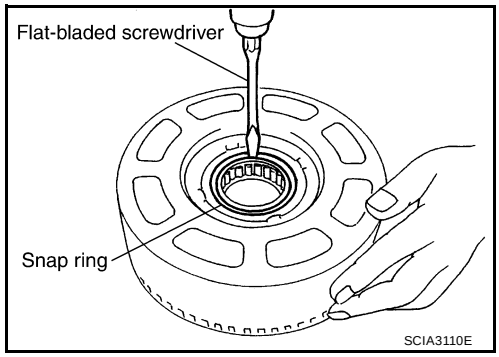

2. Remove 3rd one-way clutch from front sun gear.

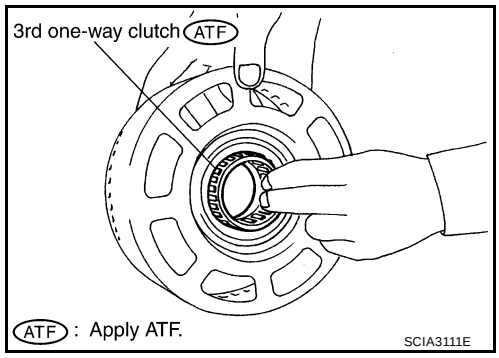

INSPECTION

3rd One-way Clutch

- Check frictional surface for wear or damage.

  CAUTION:
  If necessary, replace the 3rd one-way clutch.

Front Sun Gear Snap Ring

- Check for deformation, fatigue or damage.

  CAUTION:
  If necessary, replace the snap ring.

Front Sun Gear

- Check for deformation, fatigue or damage.

  CAUTION:
  If necessary, replace the front sun gear.

ASSEMBLY

1. Install 3rd one-way clutch in front sun gear.

   CAUTION:
   Apply ATF to 3rd one-way clutch.

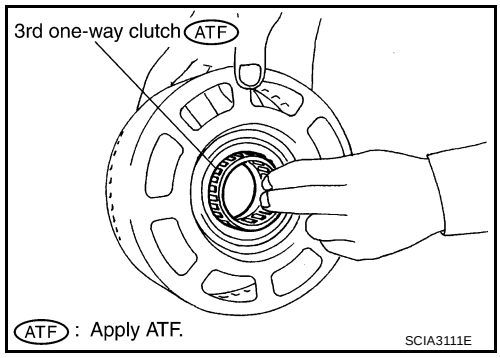

2. Install snap ring in front sun gear using suitable tool.

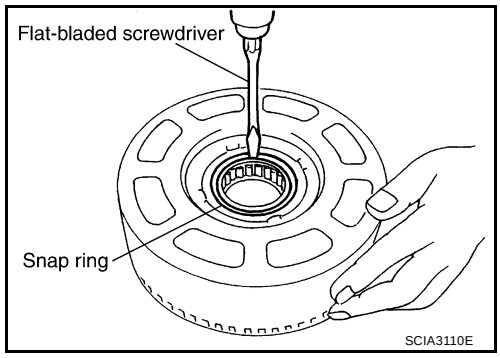

3. Check operation of 3rd one-way clutch.

a. Hold oil pump assembly and turn front sun gear.

b. Check 3rd one-way clutch for correct locking and unlocking directions.

   CAUTION:
   If not as shown, check installation direction of 3rd one-way clutch.

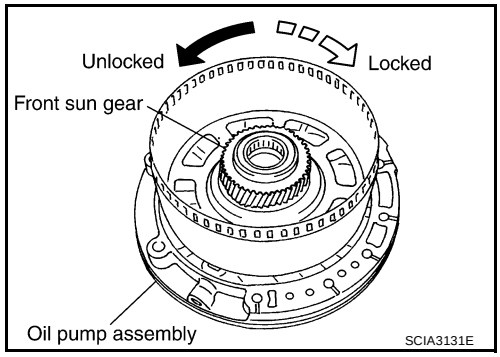

Front Carrier, Input Clutch, Rear Internal Gear

ECS00EM5

COMPONENTS

SEC.314 • 315

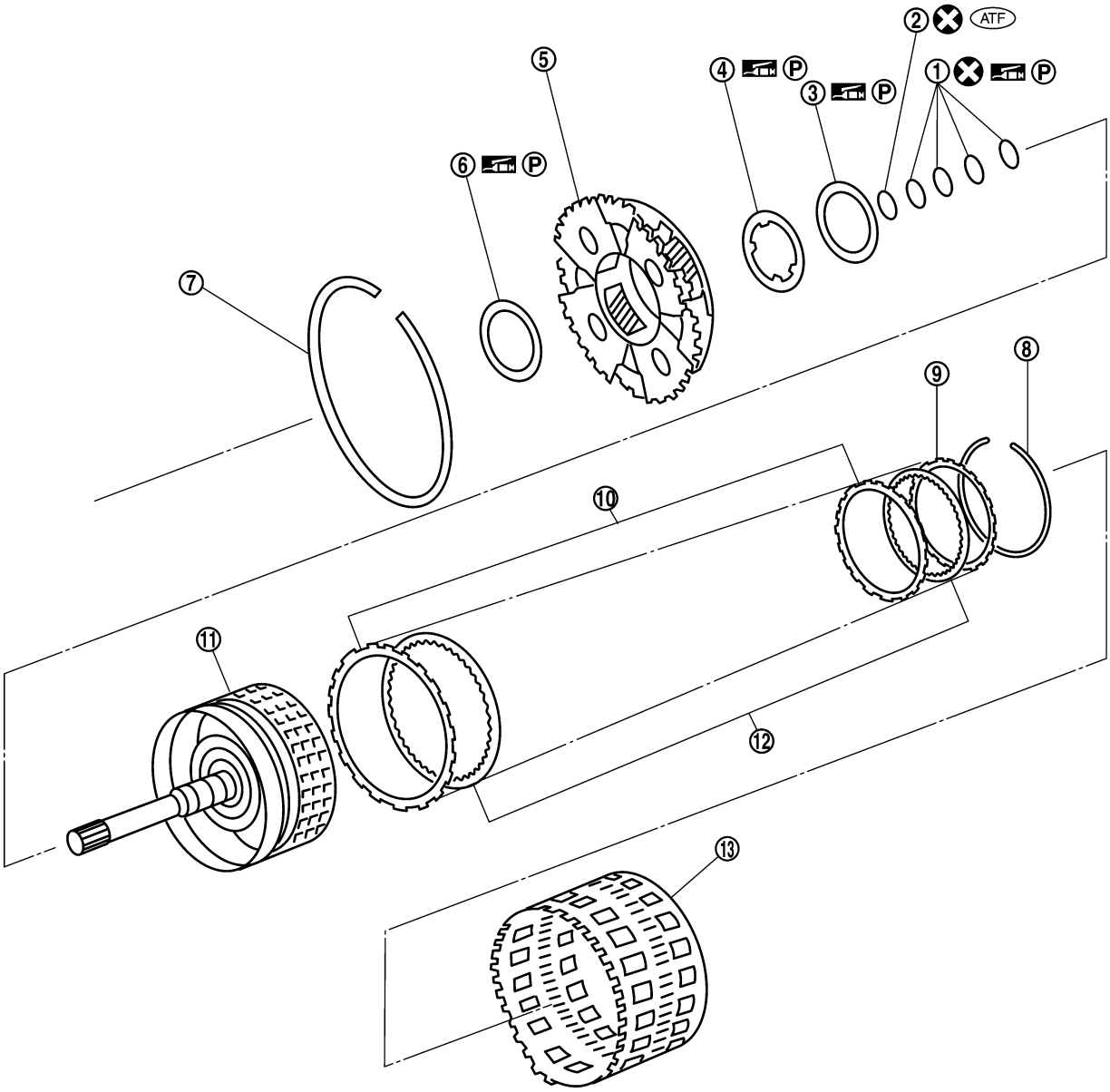

1. Seal ring
2. O-ring
3. Needle bearing
4. Bearing race
5. Front carrier assembly
6. Needle bearing
7. Snap ring
8. Snap ring
9. Retaining plate
10. Driven plate
11. Input clutch drum
12. Drive plate
13. Rear internal gear

DISASSEMBLY

1. Compress snap ring using 2 flat-bladed screwdrivers.
2. Remove front carrier assembly and input clutch assembly from rear internal gear.
3. Remove front carrier assembly from input clutch assembly.

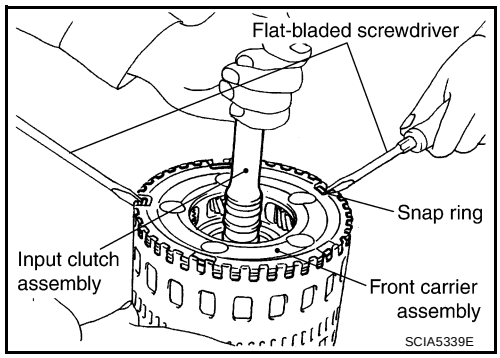

a. Remove bearing race from front carrier assembly.

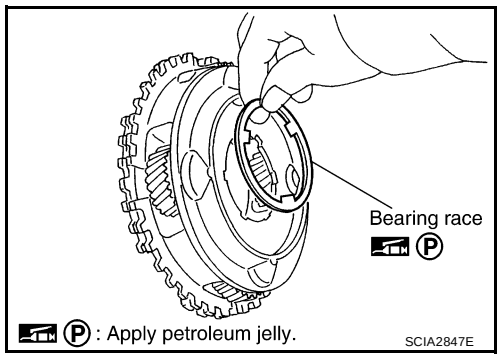

b. Remove needle bearing from front carrier assembly.

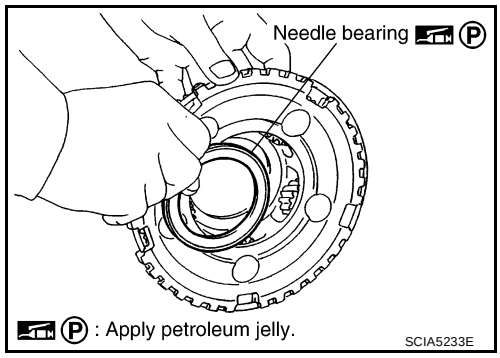

c. Remove snap ring from front carrier assembly.

CAUTION:

Do not excessively expand snap ring.

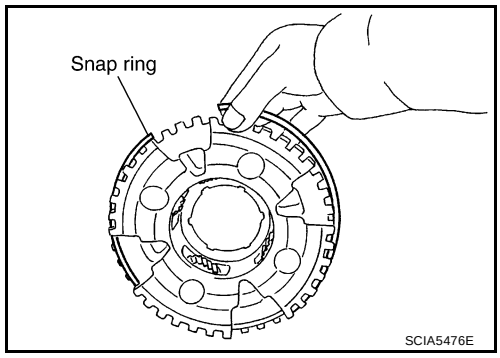

4. Disassemble input clutch assembly.

a. Remove O-ring and seal rings from input clutch assembly.

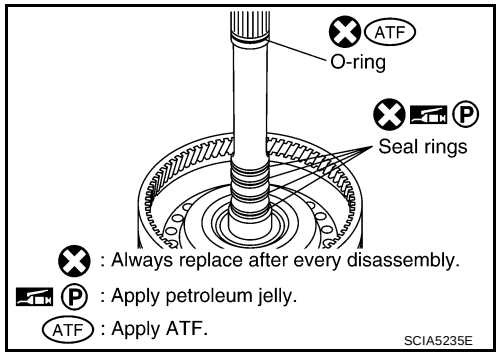

b. Remove needle bearing from input clutch assembly.

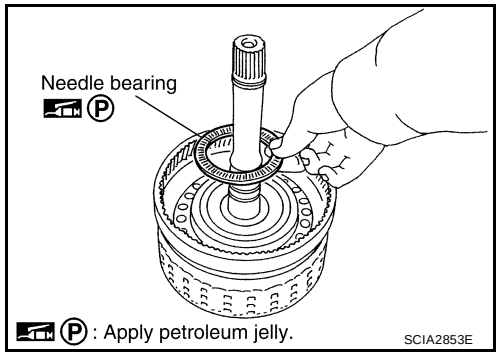

c. Remove snap ring from input clutch drum using suitable tool.

d. Remove drive plates, driven plates and retaining plate from input clutch drum.

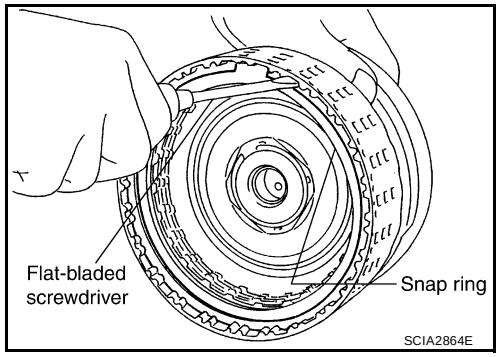

INSPECTION

Front Carrier Snap Ring

- Check for deformation, fatigue or damage.

  CAUTION:
  If necessary, replace the snap ring.

Input Clutch Snap Ring

- Check for deformation, fatigue or damage.

  CAUTION:
  If necessary, replace the input clutch assembly.

Input Clutch Drum

- Check for deformation, fatigue or damage or burns.

  CAUTION:
  If necessary, replace the input clutch assembly.

Input Clutch Drive Plates

- Check facing for burns, cracks or damage.

  CAUTION:
  If necessary, replace the input clutch assembly.

Input Clutch Retaining Plate and Driven Plates

- Check facing for burns, cracks or damage.

CAUTION:
If necessary, replace the input clutch assembly.

Front Carrier

- Check for deformation, fatigue or damage.

CAUTION:
If necessary, replace the front carrier assembly.

Rear Internal Gear

- Check for deformation, fatigue or damage.

CAUTION:
If necessary, replace the rear internal gear assembly.

ASSEMBLY

1. Install input clutch.

a. Install drive plates (3), driven plates (4) and retaining plate (2) in input clutch drum.

- Snap ring (1)

CAUTION:
Take care with order of plates.

NOTE:
There are 7 drive plates and 7 driven plates.

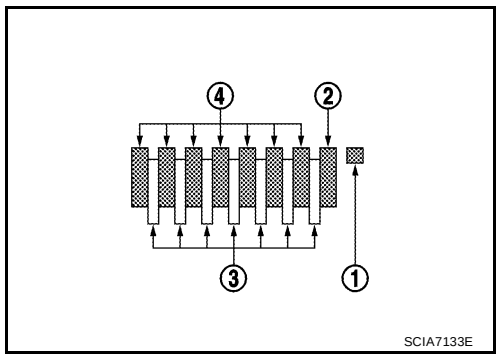

b. Install snap ring in input clutch drum using suitable tool.

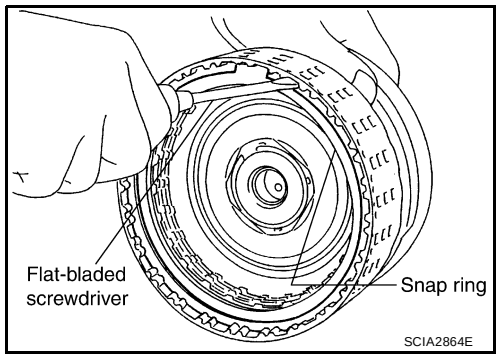

c. Install needle bearing in input clutch assembly.

CAUTION:
Apply petroleum jelly to needle bearing.

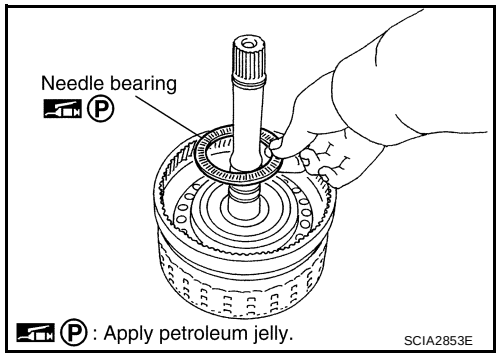

d. Install O-ring and seal rings in input clutch assembly.

CAUTION:

- **Do not reuse O-ring and seal rings.**
- **Apply ATF to O-ring.**
- **Apply petroleum jelly to seal rings.**

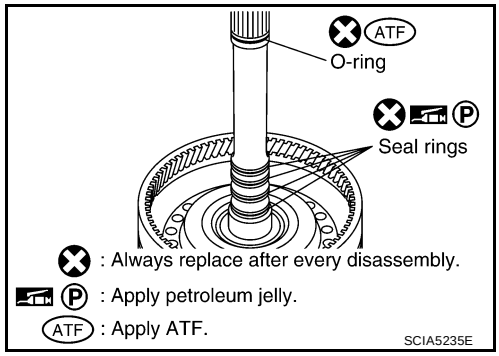

2. Install front carrier assembly.

a. Install snap ring to front carrier assembly.

CAUTION:
Do not excessively expand snap ring.

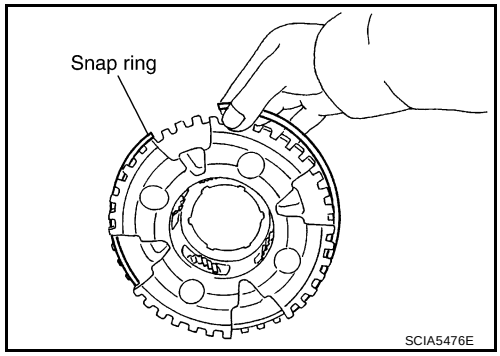

b. Install needle bearing in front carrier assembly.

CAUTION:
- **Take care with the direction of needle bearing. Refer to** **AT-257, "Locations of Adjusting Shims, Needle Bearings, Thrust Washers and Snap Rings"** **.**
- **Apply petroleum jelly to bearing race.**

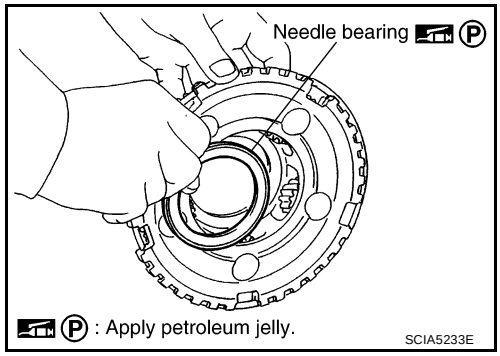

c. Install bearing race in front carrier assembly.

CAUTION:
Apply petroleum jelly to bearing race.

d. Install front carrier assembly to input clutch assembly.

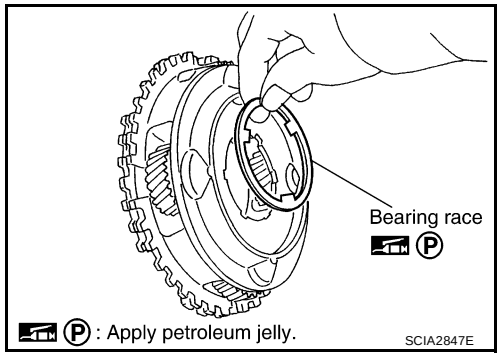

3. Compress snap ring using 2 flat-bladed screwdrivers.

4. Install front carrier assembly and input clutch assembly to rear internal gear.

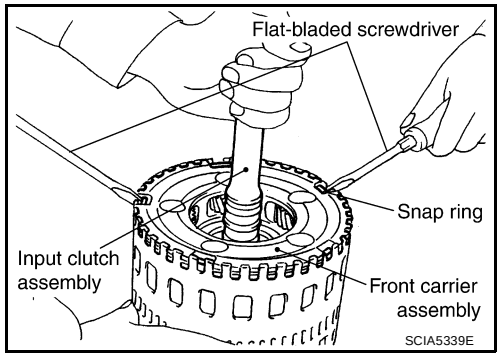

Mid Sun Gear, Rear Sun Gear, High and Low Reverse Clutch Hub

ECS00EM6

COMPONENTS

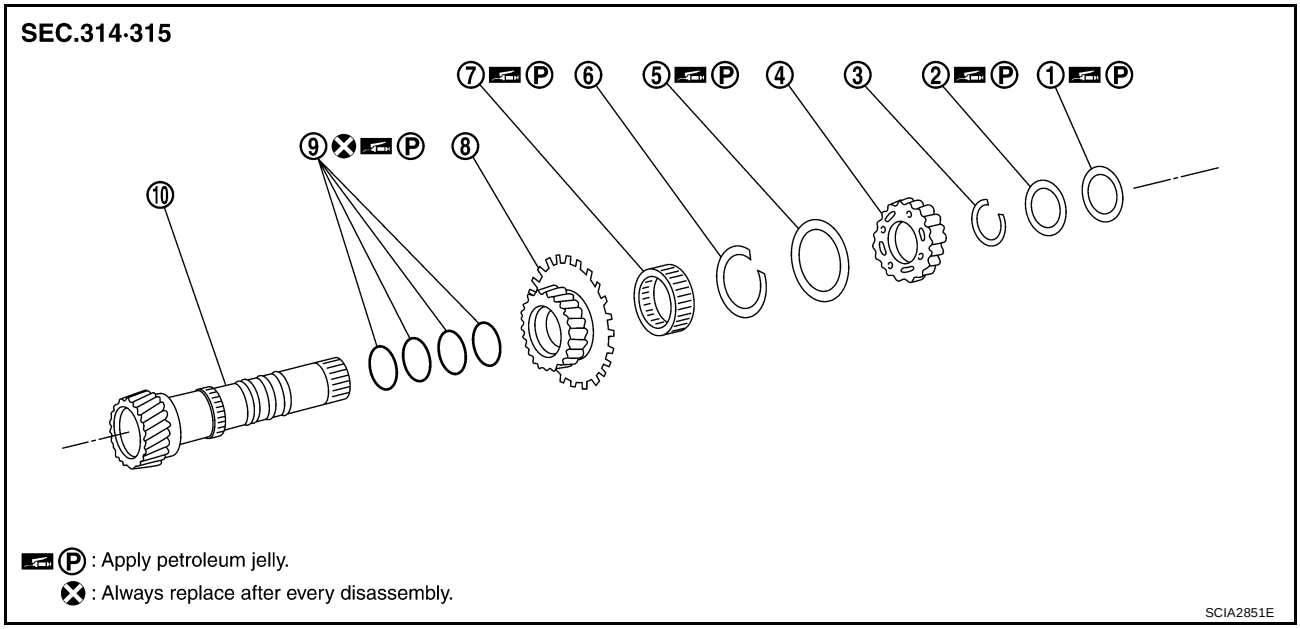

1.	Needle bearing	2.	Bearing race	3.	Snap ring
4.	High and low reverse clutch hub	5.	Needle bearing	6.	Snap ring
7.	1st one-way clutch	8.	Rear sun gear	9.	Seal ring
10.	Mid sun gear				

DISASSEMBLY

1. Remove needle bearing and bearing race from high and low reverse clutch hub.

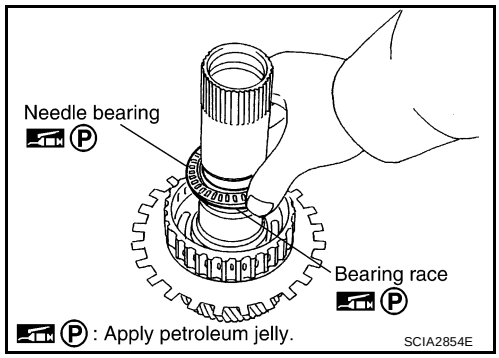

2. Remove snap ring from mid sun gear assembly using suitable tool.

   CAUTION:
   Do not excessively expand snap ring.

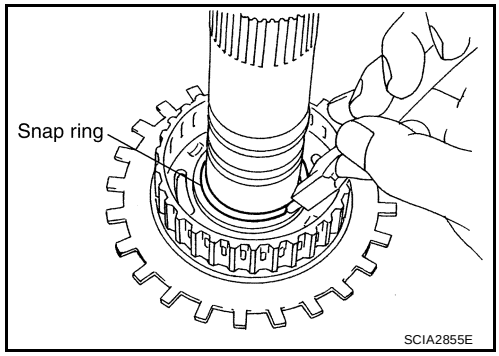

3. Remove high and low reverse clutch hub from mid sun gear assembly.

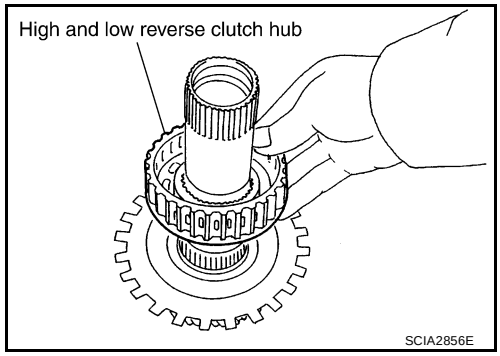

a. Remove needle bearing from high and low reverse clutch hub.

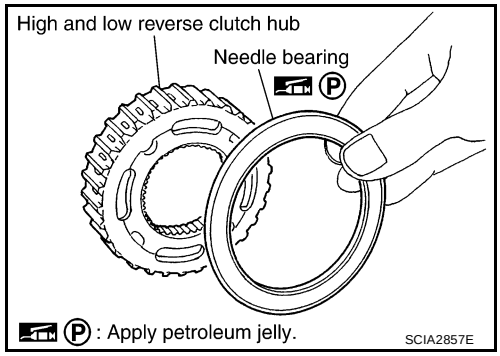

4. Remove rear sun gear assembly from mid sun gear assembly.

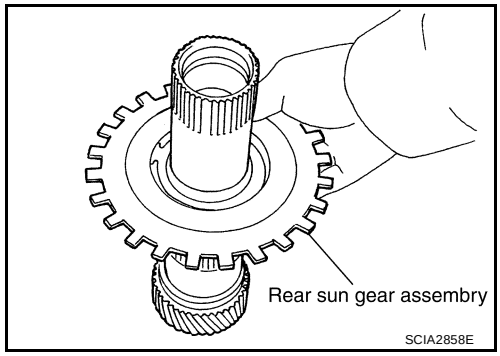

a. Remove snap ring from rear sun gear using suitable tool.

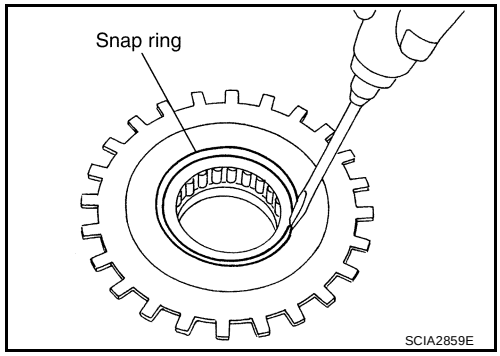

b. Remove 1st one-way clutch from rear sun gear.

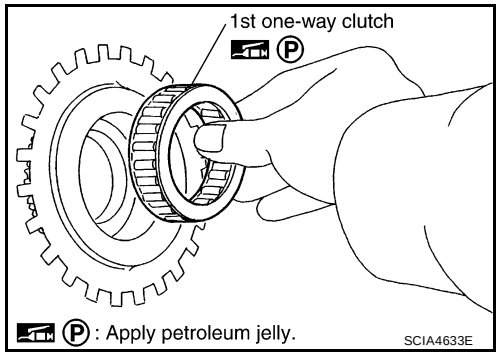

5. Remove seal rings from mid sun gear.

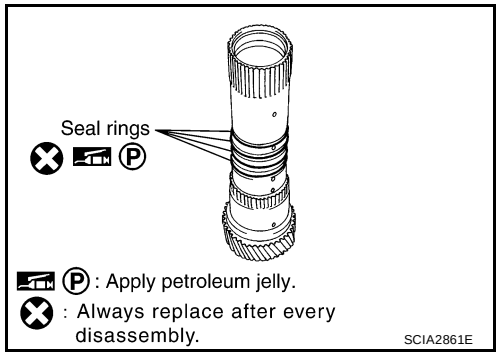

INSPECTION

High and Low Reverse Clutch Hub Snap Ring, Rear Sun Gear Snap Ring

- Check for deformation, fatigue or damage.

  CAUTION:
  If necessary, replace the snap ring.

1st One-way Clutch

- Check frictional surface for wear or damage.

  CAUTION:
  If necessary, replace the 1st one-way clutch.

Mid Sun Gear

- Check for deformation, fatigue or damage.

  CAUTION:
  If necessary, replace the mid sun gear.

Rear Sun Gear

- Check for deformation, fatigue or damage.

  CAUTION:
  If necessary, replace the rear sun gear.

High and Low Reverse Clutch Hub

- Check for deformation, fatigue or damage.

  CAUTION:
  If necessary, replace the high and low reverse clutch hub.

ASSEMBLY

1. Install seal rings to mid sun gear.

   CAUTION:
   - **Do not reuse seal rings.**
   - **Apply petroleum jelly to seal rings.**

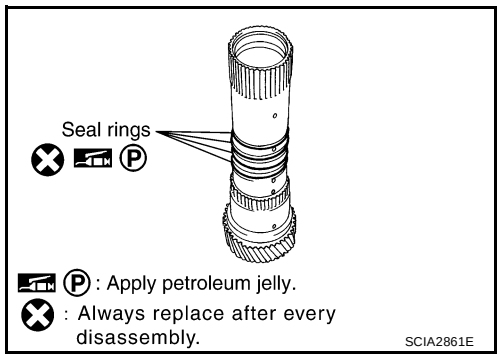

2. Install 1st one-way clutch to rear sun gear.

   CAUTION:
   Apply petroleum jelly to 1st one-way clutch.

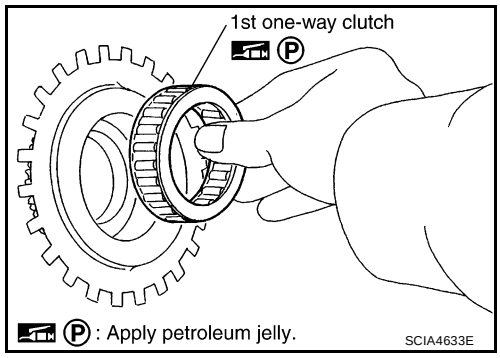

3. Install snap ring to rear sun gear using suitable tool.

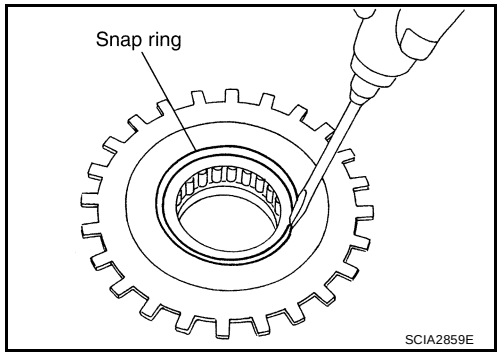

4. Install rear sun gear assembly to mid sun gear assembly.

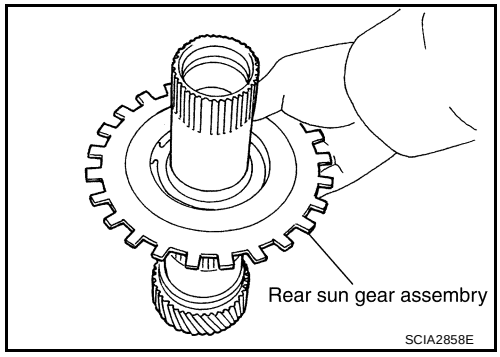

5. Install needle bearing to high and low reverse clutch hub.

CAUTION:
Apply petroleum jelly to needle bearing.

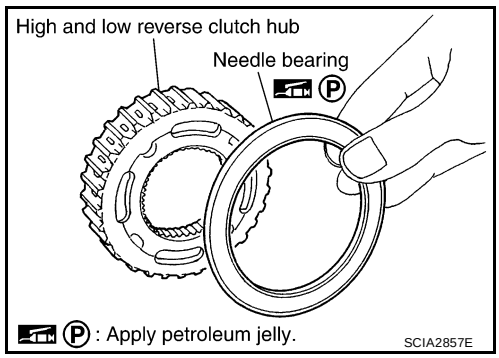

6. Install high and low reverse clutch hub to mid sun gear assembly.

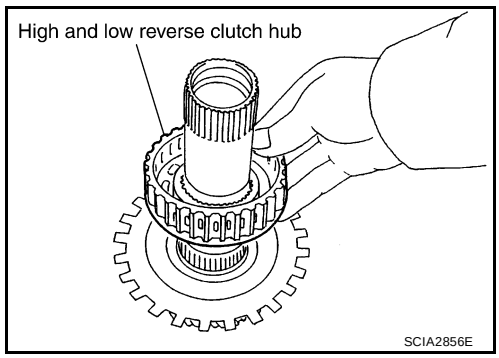

7. Install snap ring to mid sun gear assembly using suitable tool.

CAUTION:
Do not excessively expand snap ring.

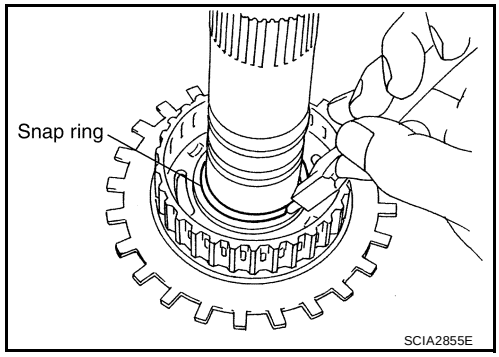

8. Check operation of 1st one-way clutch.

a. Hold mid sun gear and turn rear sun gear.

b. Check 1st one-way clutch for correct locking and unlocking directions.

CAUTION:
If not as shown, check installation direction of 1st one-way clutch.

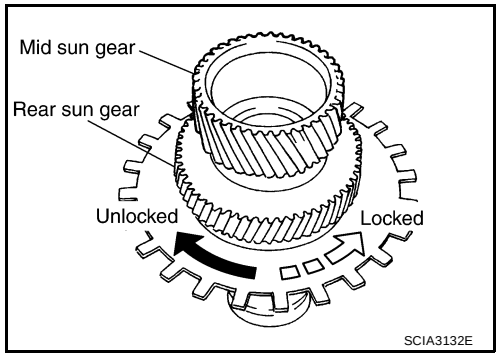

9. Install needle bearing and bearing race to high and low reverse clutch hub.

CAUTION:
Apply petroleum jelly to needle bearing and bearing race.

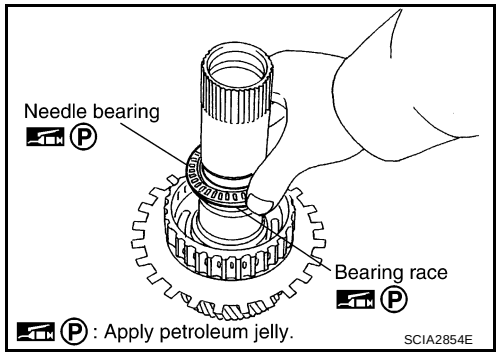

High and Low Reverse Clutch

ECS00EM7

COMPONENTS

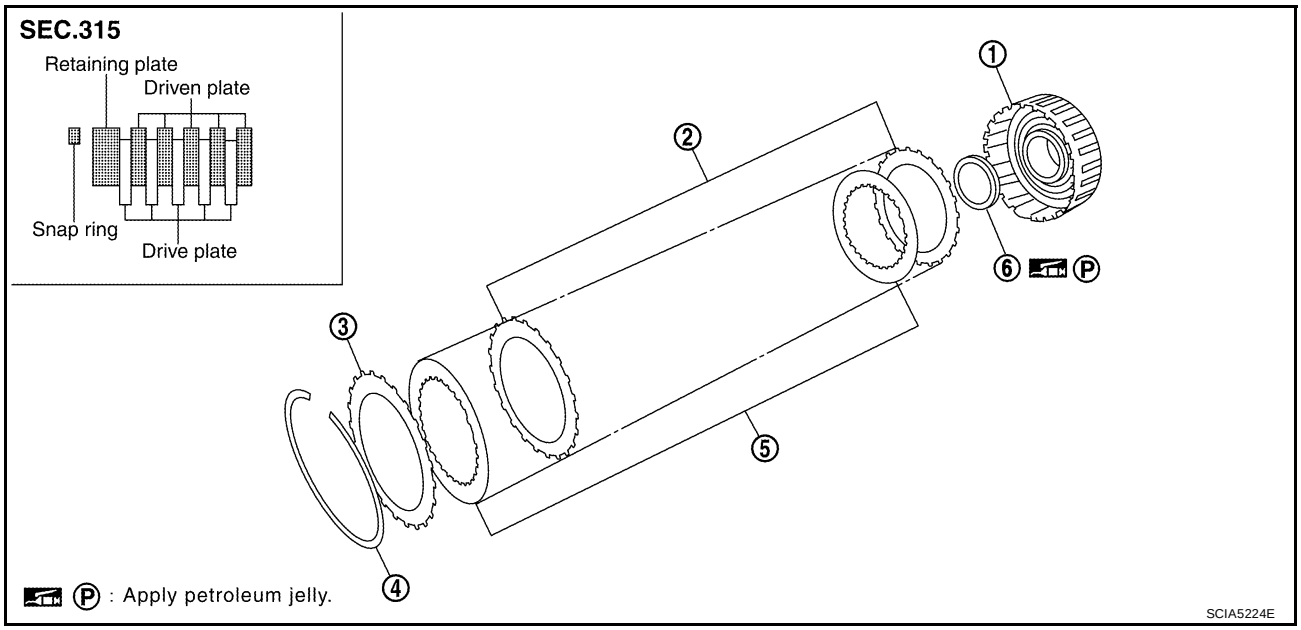

1.	High and low reverse clutch drum	2.	Driven plate	3.	Retaining plate
4.	Snap ring	5.	Drive plate	6.	Bearing race

DISASSEMBLY

1. Remove bearing race from high and low reverse clutch drum.

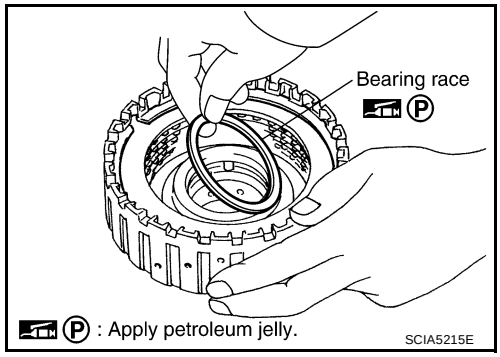

2. Remove snap ring from high and low reverse clutch drum using suitable tool.
3. Remove drive plates, driven plates and retaining plate from high and low reverse clutch drum.

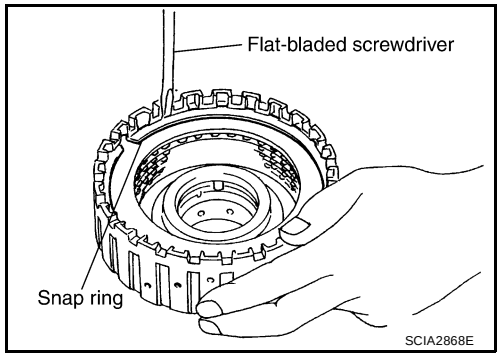

INSPECTION

- **Check the following, and replace high and low reverse clutch assembly if necessary.**

High and Low Reverse Clutch Snap Ring

- Check for deformation, fatigue or damage.

High and Low Reverse Clutch Drive Plates

- Check facing for burns, cracks or damage.

High and Low Reverse Clutch Retaining Plate and Driven Plates

- Check facing for burns, cracks or damage.

ASSEMBLY

1. Install drive plates, driven plates and retaining plate in high and low reverse clutch drum.

   CAUTION:
   Take care with order of plates.

2. Install snap ring in high and low reverse clutch drum using suitable tool.

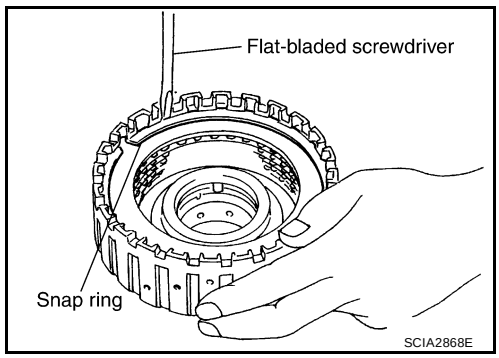

3. Install bearing race to high and low reverse clutch drum.

   CAUTION:
   Apply petroleum jelly to bearing race.

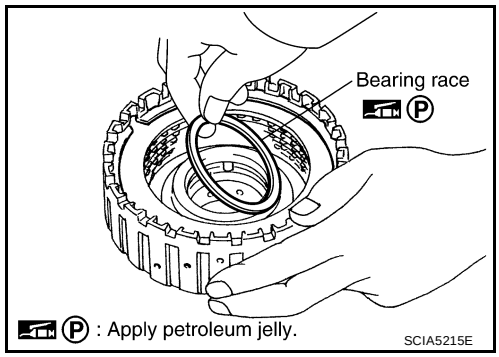

Direct Clutch

ECS00EM8

COMPONENTS

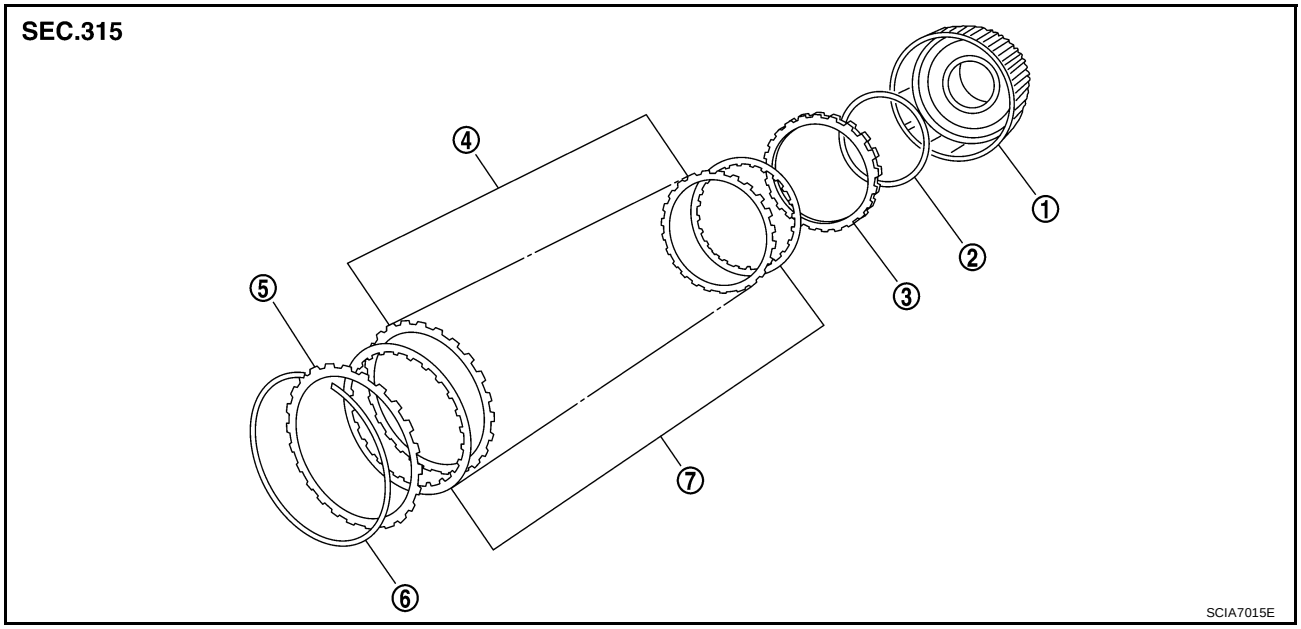

1. Direct clutch drum
2. Dish plate
3. Retaining plate
4. Driven plate
5. Retaining plate
6. Snap ring
7. Drive plate

DISASSEMBLY

1. Remove snap ring from direct clutch drum using suitable tool.
2. Remove retaining plates, drive plates, driven plates and dish plate from direct clutch drum.

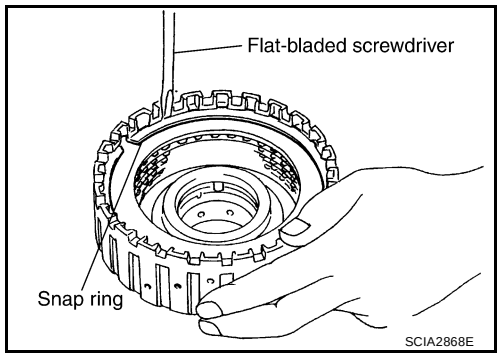

INSPECTION

- **Check the following, and replace direct clutch assembly if necessary.**

Direct Clutch Snap Ring

- Check for deformation, fatigue or damage.

Direct Clutch Drive Plates

- Check facing for burns, cracks or damage.

Direct Clutch Retaining Plate and Driven Plates

- Check facing for burns, cracks or damage.

ASSEMBLY

1. Install dish plate (5), retaining plates (2), drive plates (3) and driven plates (4) in direct clutch drum.
   - Snap ring (1)

   CAUTION:
   Take care with order of plates.

   NOTE:
   There are 5 drive plates and 4 driven plates.

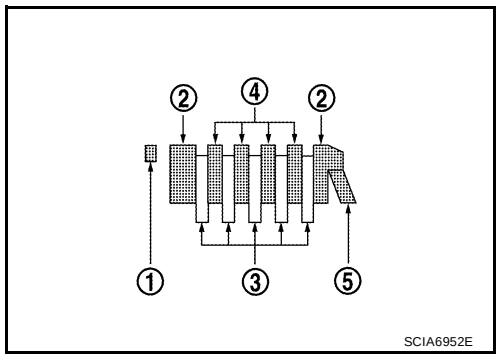

2. Install snap ring in direct clutch drum using suitable tool.

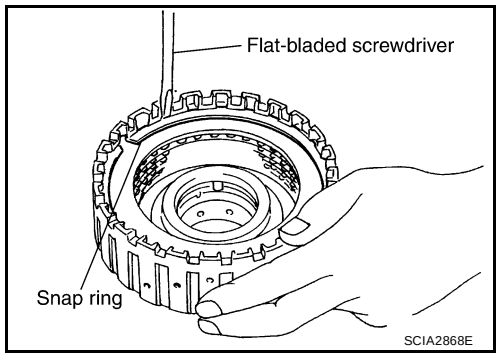

ASSEMBLY

PFP:00000

Assembly (1)

ECS00EM9

1. Drive manual shaft oil seals into the transmission case until they are flush using suitable tool.

   CAUTION:
   - **Apply ATF to manual shaft oil seals.**
   - **Do not reuse manual shaft oil seals.**

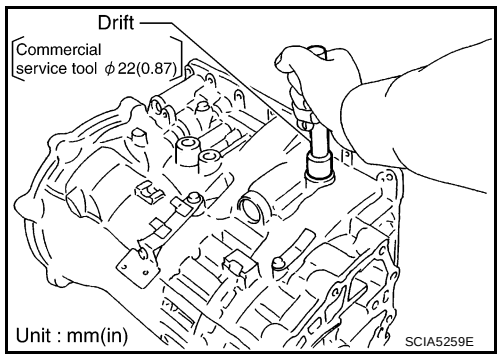

2. Install detent spring and spacer in transmission case and secure with the bolt.

   Bolt : 7.9 N·m (0.81 kg-m, 70 in-lb)

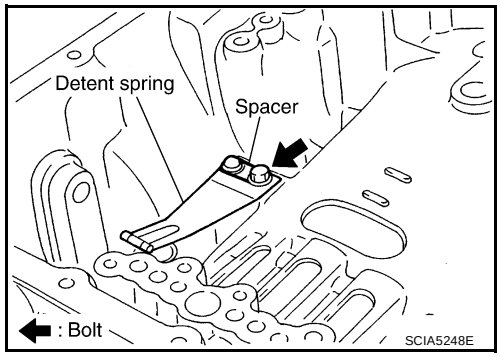

3. Install manual shaft to transmission case.

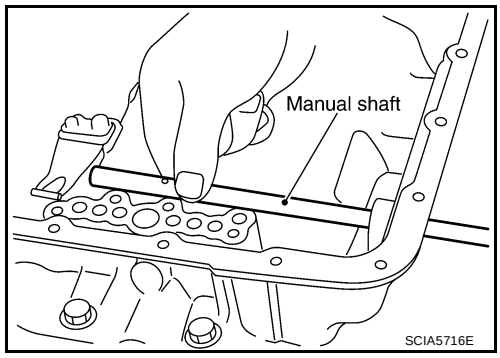

4. Install parking rod to manual plate.

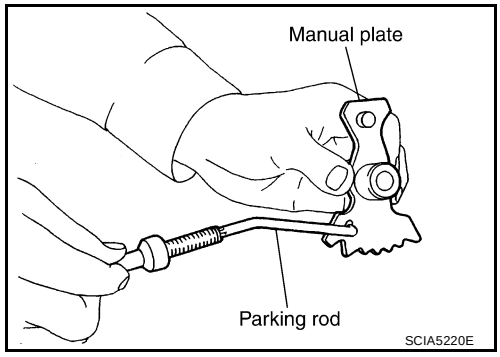

5. Install manual plate (with parking rod) to manual shaft.

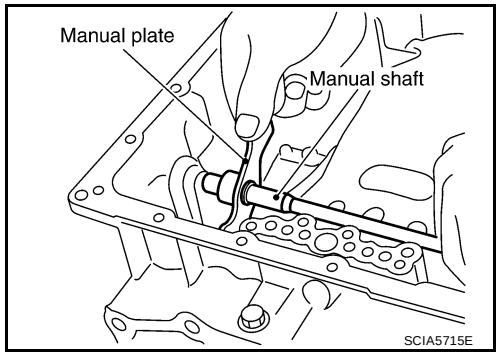

6. Install retaining pin into the manual plate and manual shaft.
a. Align pinhole of the manual plate to pinhole of the manual shaft using suitable tool.
b. Tap the retaining pin into the manual plate using suitable tool.

CAUTION:
- **Drive retaining pin to 2±0.5 mm (0.08±0.020 in) over the manual plate.**
- **Do not reuse retaining pin.**

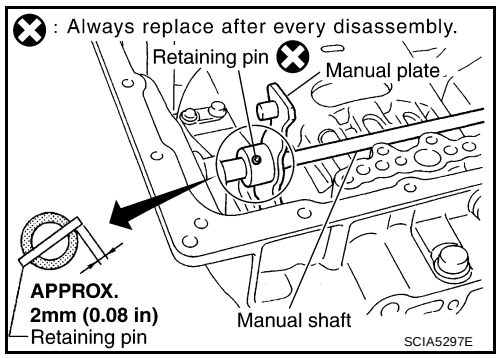

7. Install retaining pin into the transmission case and manual shaft.
a. Align pinhole of the transmission case to pinhole of the manual shaft using suitable tool.
b. Tap the retaining pin into the transmission case using suitable tool.

CAUTION:
- **Drive retaining pin to 5±1 mm (0.20±0.04 in) over the transmission case.**
- **Do not reuse retaining pin.**

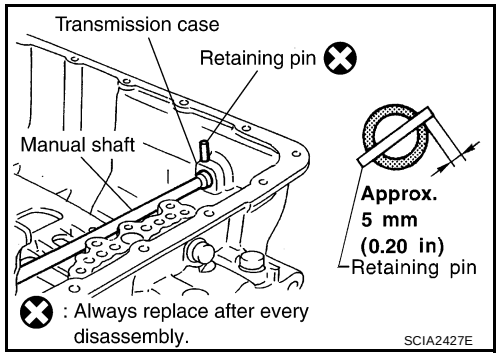

8. Install O-rings to servo assembly.

CAUTION:
- **Do not reuse O-rings.**
- **Apply petroleum jelly to O-rings.**

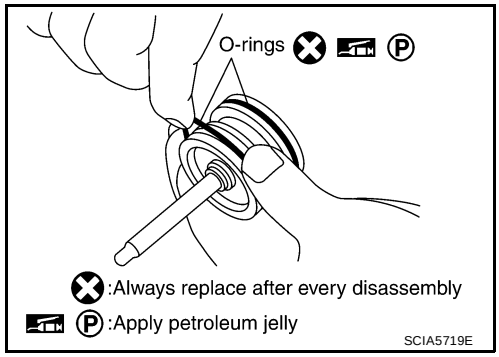

9. Install return spring to servo assembly.

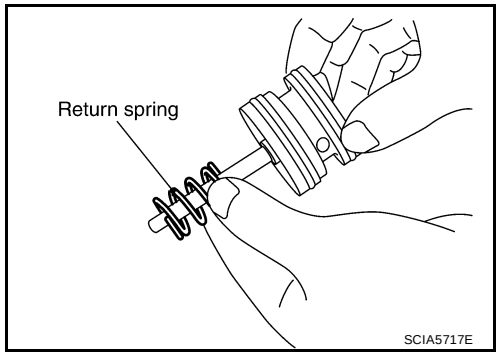

10. Install servo assembly in transmission case.

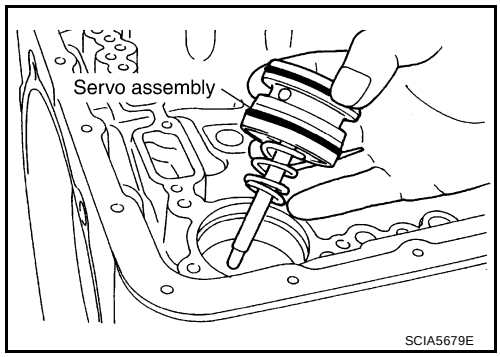

11. Install snap ring to transmission case using suitable tool.

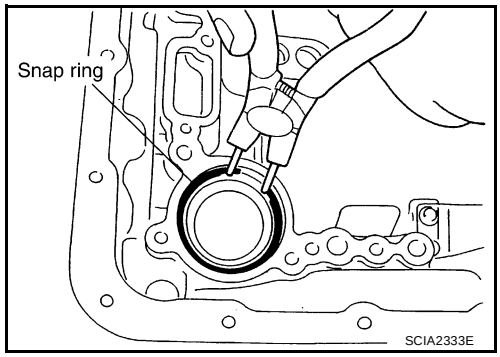

12. Install D-rings in reverse brake piston.

CAUTION:

- **Do not reuse D-rings.**
- **Apply ATF to D-rings.**

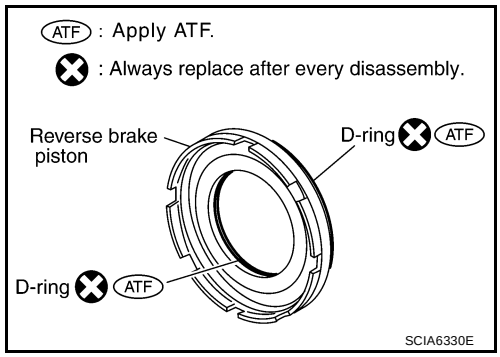

13. Install reverse brake piston in transmission case.

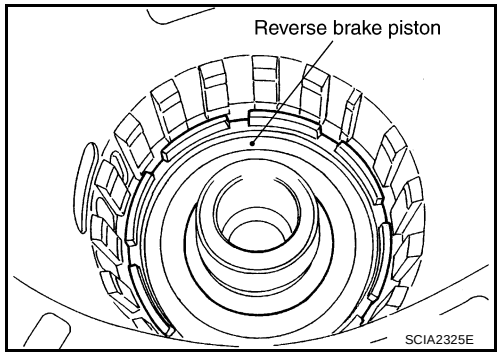

14. Install needle bearing to drum support edge surface.

CAUTION:

Apply petroleum jelly to needle bearing.

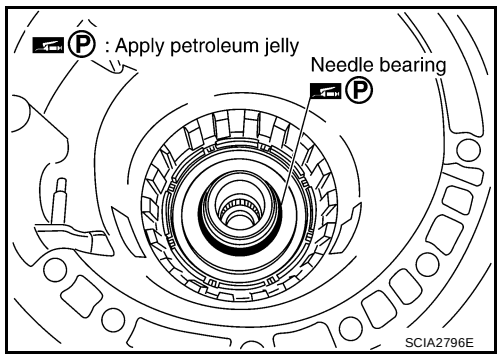

15. Install seal rings to drum support.

CAUTION:

- **Do not reuse seal rings.**
- **Apply petroleum jelly to seal rings.**

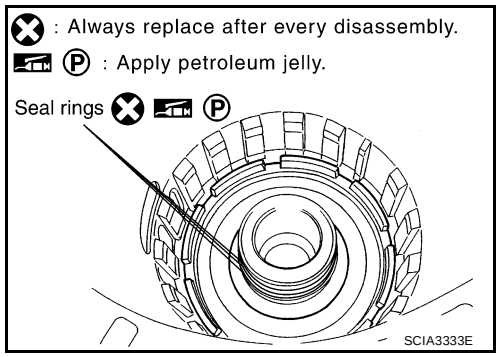

16. Install spring retainer and return spring in transmission case.

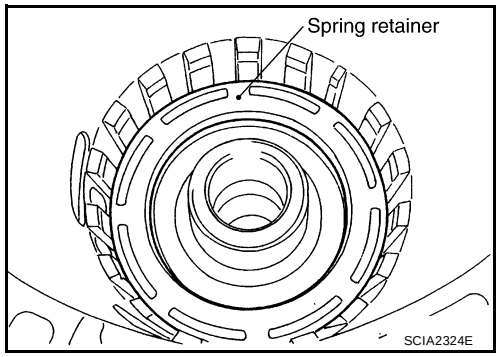

17. Install snap ring in transmission case while compressing return spring using Tool.

Tool number : KV31102400 (J-34285 and J-34285-87)

CAUTION:

Securely assemble them using a flat-bladed screwdriver so that snap ring tension is slightly weak.

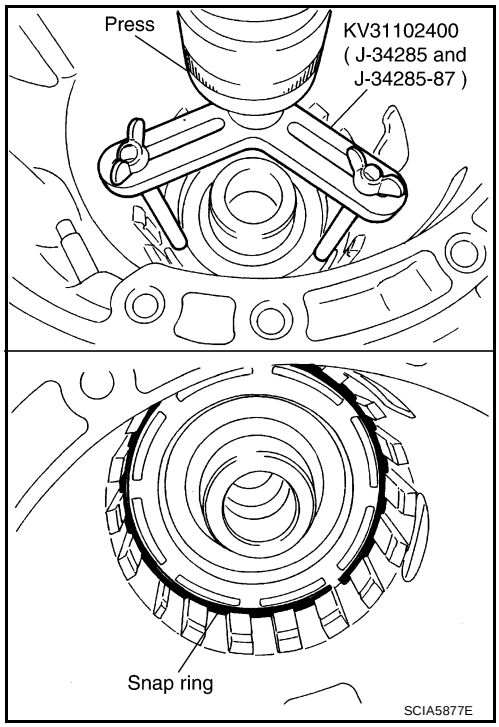

18. Install reverse brake drive plates (3), driven plates (4) and dish plates (5) in transmission case.

- Snap ring (1)
- Retaining plate (2)

CAUTION:

Take care with order of plates.

NOTE:

There are 6 drive plates and 6 driven plates.

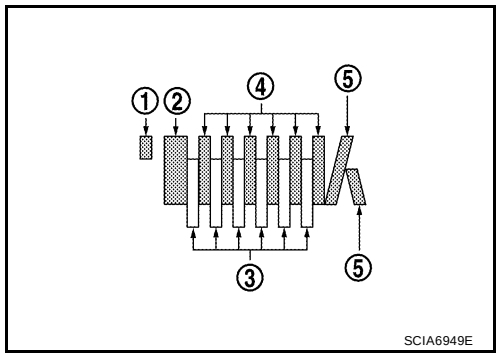

19. Assemble N-spring.
20. Install reverse brake retaining plate in transmission case.

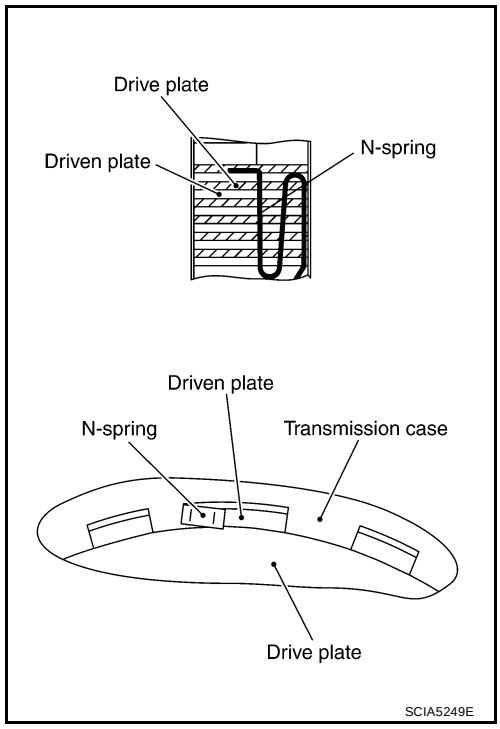

21. Install snap ring in transmission case.

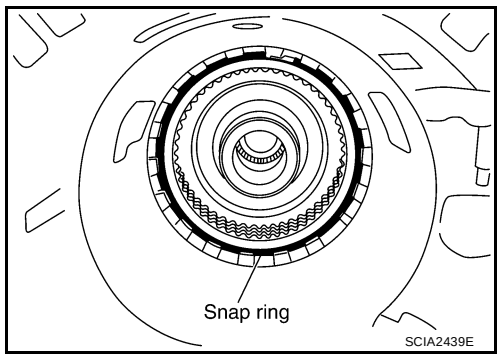

22. Measure clearance (A) between retaining plate and snap ring. If not within specified clearance, select proper retaining plate.

Clearance "A"	**: 0.7 - 1.1mm (0.028 - 0.043 in)**
Retaining plate	**: Refer to AT-321, "Reverse brake"**

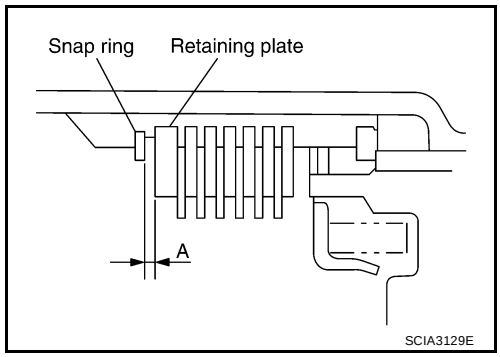

23. Install needle bearing to transmission case.

CAUTION:

- **Take care with the direction of needle bearing. Refer to AT-257, "Locations of Adjusting Shims, Needle Bearings, Thrust Washers and Snap Rings" .**
- **Apply petroleum jelly to needle bearing.**

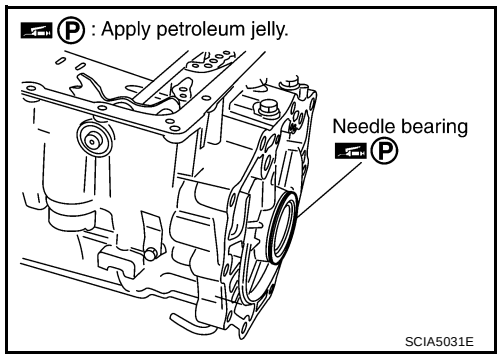

24. Install revolution sensor to transmission case and tighten bolt to specified torque.

Revolution sensor bolt : 5.8 N·m (0.59 kg-m, 51 in-lb)

CAUTION:
- **Do not subject sensor to impact by dropping or hitting it.**
- **Do not disassemble sensor.**
- **Do not allow metal filings or any foreign material to get on the sensor's front edge magnetic area.**
- **Do not place sensor in an area affected by magnetism.**

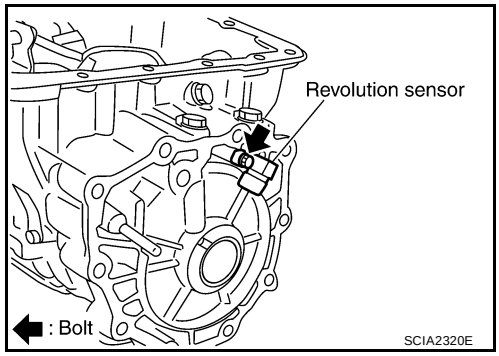

25. Install new rear oil seal until it is flush into the rear extension case (2WD models) using Tool or adapter case (4WD models) using suitable tool.

Tool number : ST33400001 (J-26082)

CAUTION:
- **Apply ATF to rear oil seal.**
- **Do not reuse rear oil seal.**

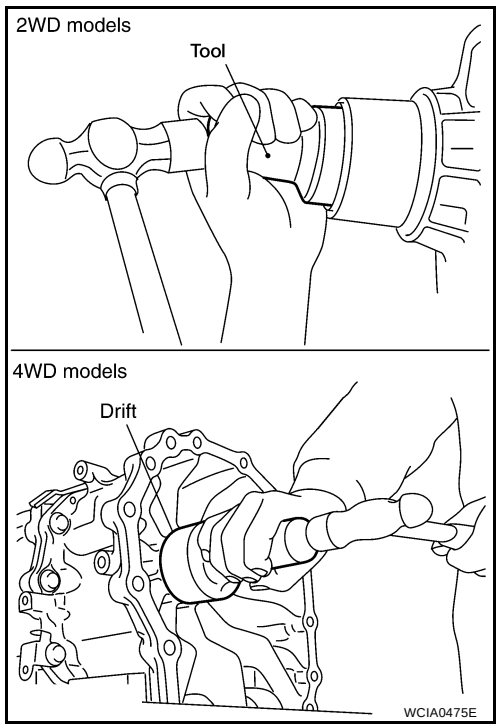

26. Install return spring (1) to parking pawl (2).

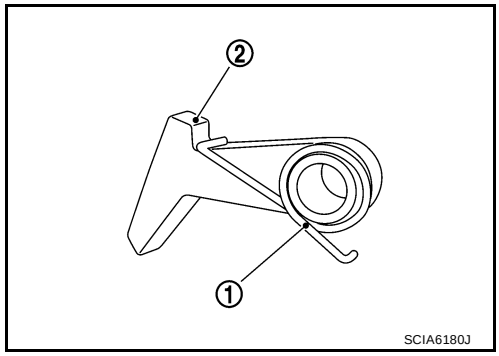

27. Install parking pawl (with return spring) and pawl shaft to rear extension (2WD models) or adapter case (4WD models).

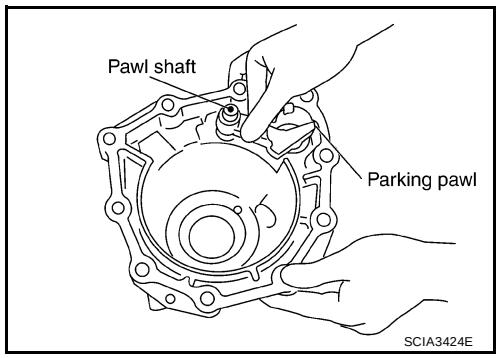

28. Install parking actuator support to rear extension (2WD models) or adapter case (4WD models).

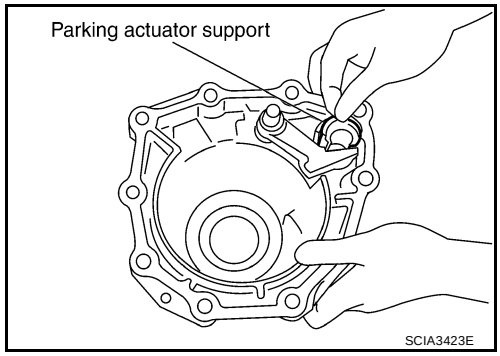

29. Install needle bearing (1) to rear extension (2WD models) or adapter case (4WD models).

CAUTION:
Apply petroleum jelly to needle bearing.

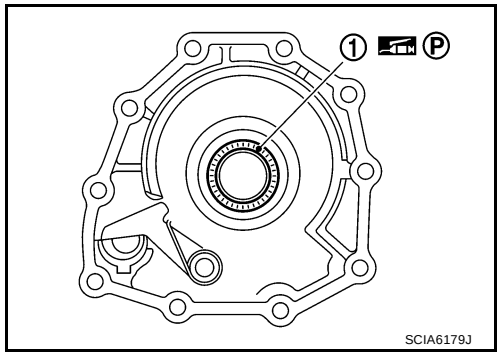

30. Install seal rings to output shaft.

CAUTION:
- **Do not reuse seal rings.**
- **Apply petroleum jelly to seal rings.**

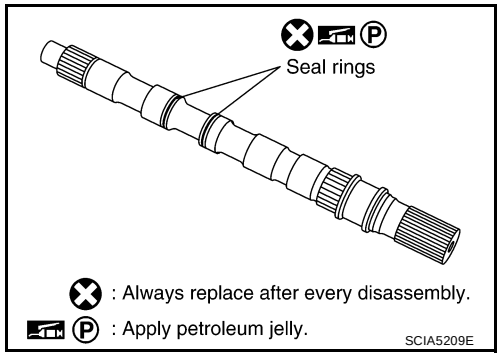

31. Install parking gear to output shaft.

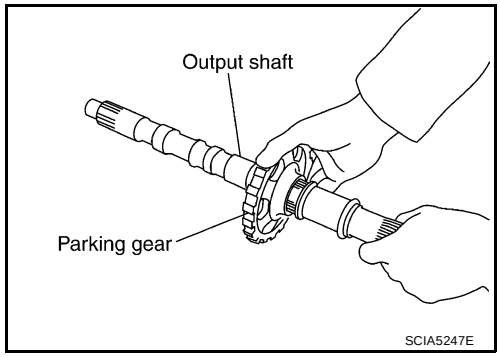

32. Install output shaft in transmission case.

CAUTION:
Do not mistake front of shaft for rear because both sides look similar (thinner end is front side).

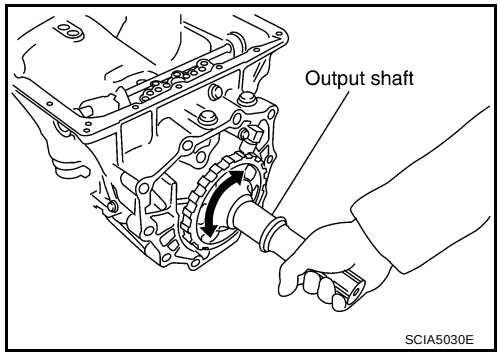

33. Install bearing race to output shaft.

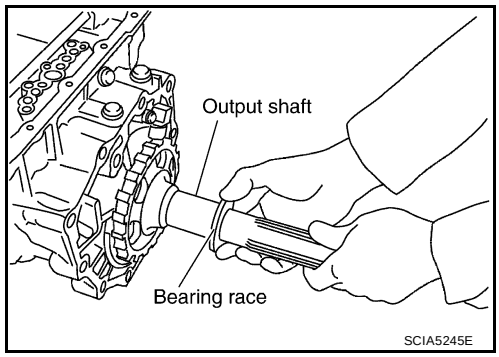

34. Install rear extension assembly (2WD models) or adapter case assembly (4WD models) according to the following procedures.

a. **2WD models**

i. Apply recommended sealant (Genuine Anaerobic Liquid Gasket or equivalent. Refer to GI-47, "Recommended Chemical Products and Sealants" .) to rear extension assembly as shown.

CAUTION:
Completely remove all moisture, oil, old sealant and any foreign material from the transmission case and rear extension assembly mating surfaces.

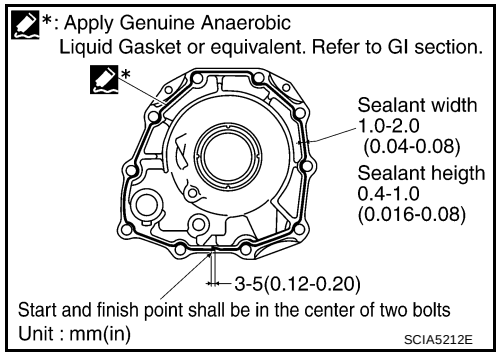

ii. Install rear extension assembly to transmission case.

CAUTION:
Insert the tip of parking rod between the parking pawl and the parking actuator support when assembling the rear extension assembly.

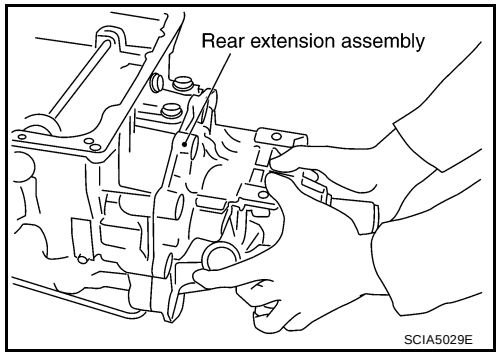

iii. Tighten rear extension assembly bolts to specified torque.

Rear extension assembly bolt	**: 52 N·m (5.3 kg-m, 38 ft-lb)**
Self-sealing bolt	**: 61 N·m (6.2 kg-m, 45 ft-lb)**

CAUTION:
Do not reuse self-sealing bolt.

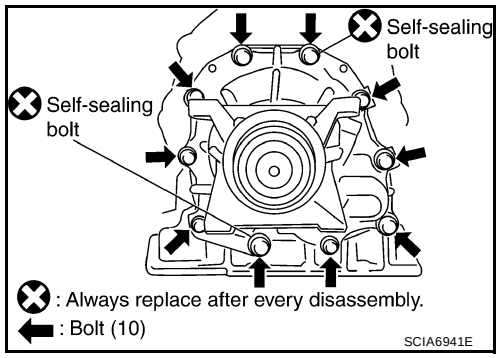

b. **4WD models**

i. Install gasket onto transmission case.

CAUTION:

- **Completely remove all moisture, oil, old gasket and any foreign material from the transmission case and adapter case assembly mating surfaces.**
- **Do not reuse gasket.**

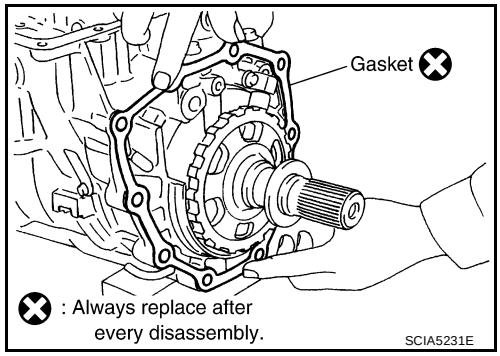

ii. Install adapter case assembly to transmission case.

CAUTION:

Insert the tip of parking rod between the parking pawl and the parking actuator support when assembling the rear extension assembly.

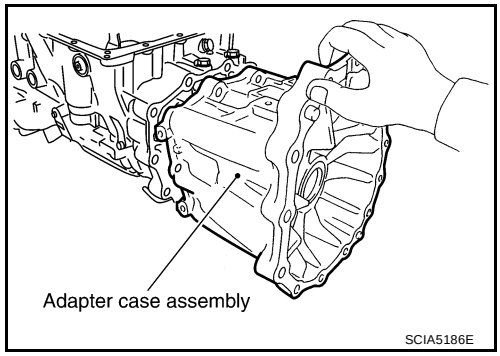

iii. Install the bracket (2) and adapter case assembly bolts (1) and tighten to the specified torque.

Adapter case assembly bolt	**: 52 N·m (5.3 kg-m, 38 ft-lb)**
Self-sealing bolt	**: 61 N·m (6.2 kg-m, 45 ft-lb)**

CAUTION:

Do not reuse self-sealing bolt (3).

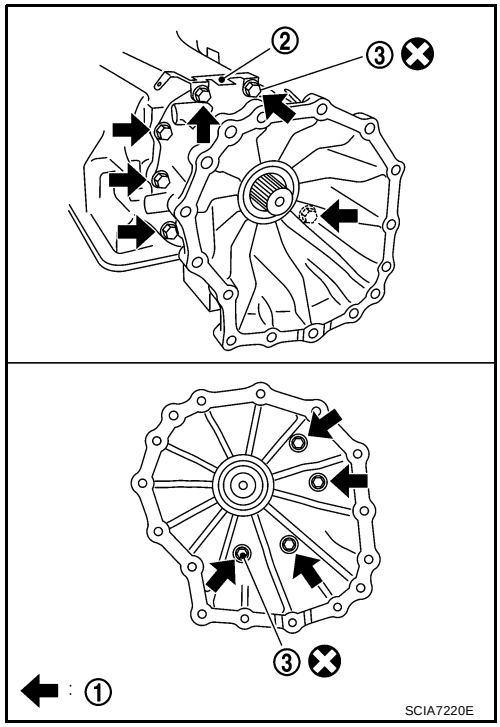

35. Install direct clutch assembly in reverse brake.

CAUTION:

Make sure that drum support edge surface and direct clutch inner boss edge surface come to almost same place.

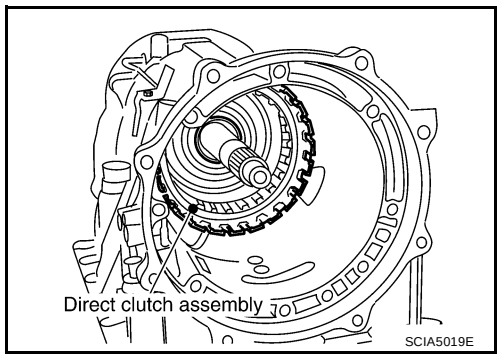

36. Install needle bearing in drum support.

CAUTION:
Apply petroleum jelly to needle bearing.

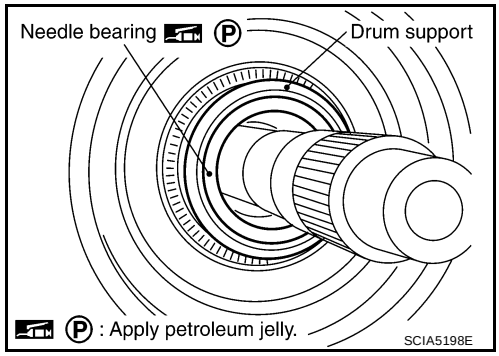

37. Install high and low reverse clutch assembly in direct clutch.

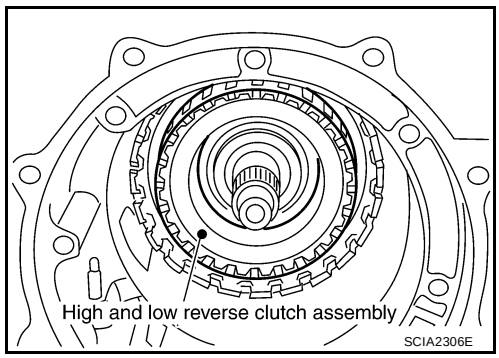

38. Align the drive plate using suitable tool.

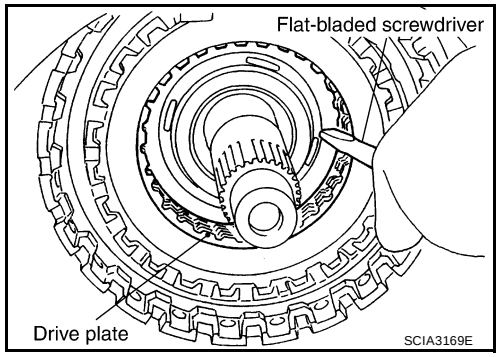

39. Install high and low reverse clutch hub, mid sun gear assembly and rear sun gear assembly as a unit.

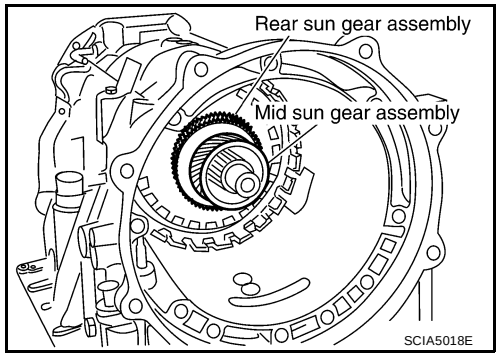

CAUTION:
Make sure that portion "A" of high and low reverse clutch drum protrudes approximately 2 mm (0.08 in) beyond portion "B" of rear sun gear.

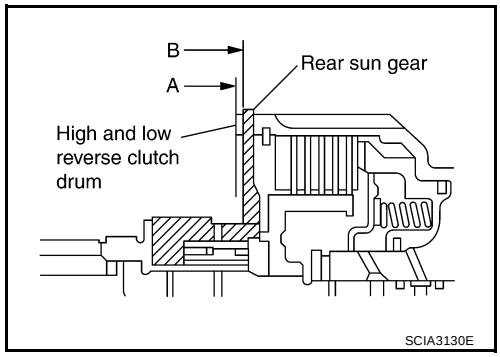

40. Install needle bearing in rear carrier assembly.

CAUTION:
Apply petroleum jelly to needle bearing.

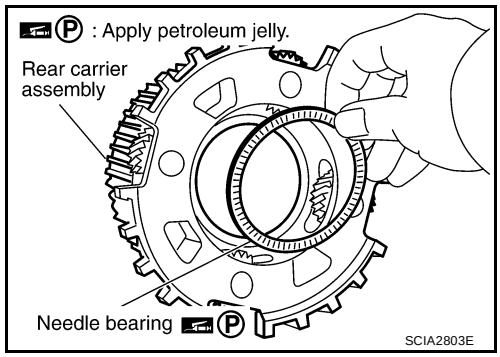

41. Install bearing race in rear carrier assembly.

CAUTION:
Apply petroleum jelly to bearing race.

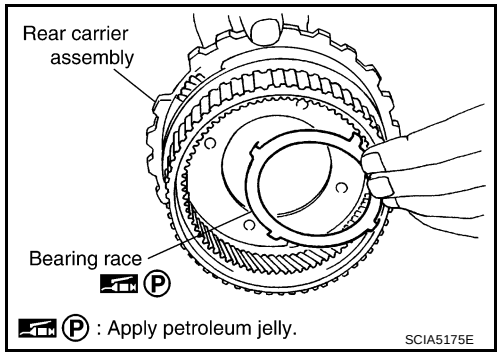

42. Install rear carrier assembly in direct clutch drum.

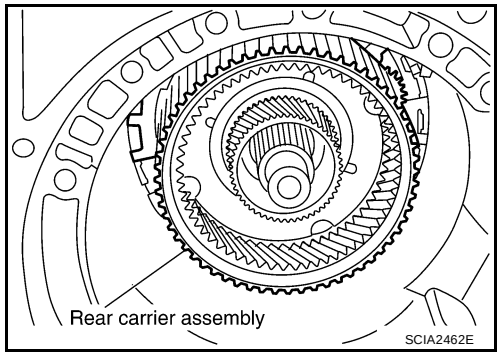

43. Install needle bearing (rear side) to mid carrier assembly.

CAUTION:

Apply petroleum jelly to needle bearing.

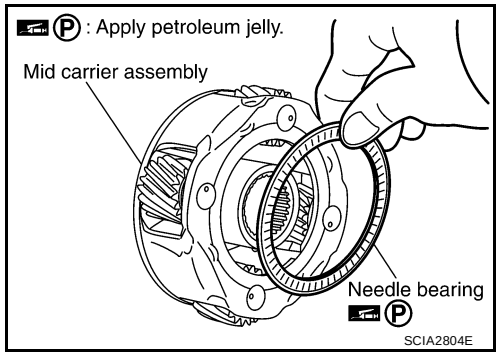

44. Install needle bearing (front side) to mid carrier assembly.

CAUTION:

Apply petroleum jelly to needle bearing.

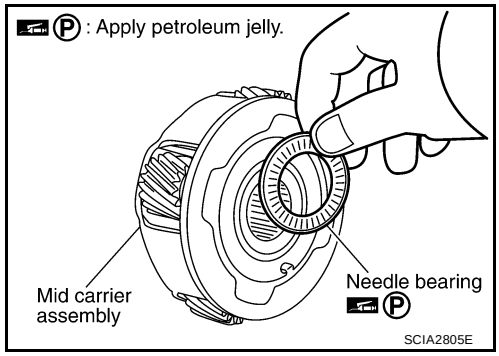

45. Install mid carrier assembly in rear carrier assembly.

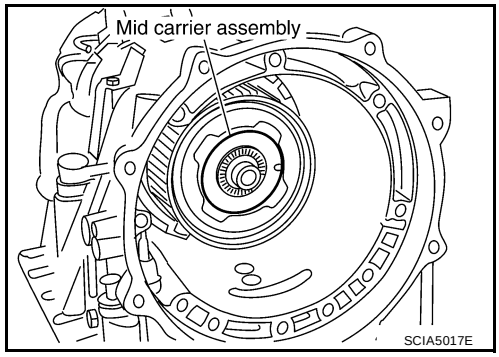

46. Install front carrier assembly, input clutch assembly and rear internal gear as a unit.

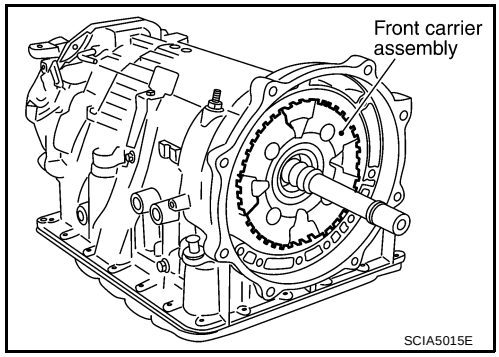

47. Install seal rings in input clutch assembly.

CAUTION:

- **Do not reuse seal rings.**
- **Apply petroleum jelly to seal rings.**

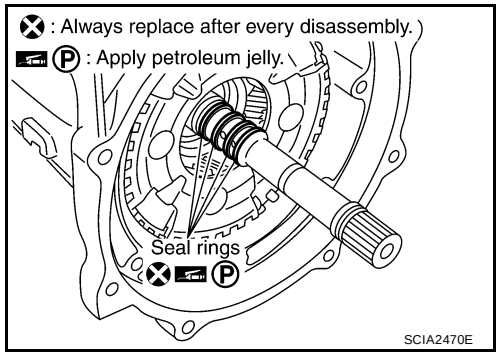

48. Install band servo anchor end pin and lock nut in transmission case.

CAUTION:
Do not reuse band servo anchor end pin.

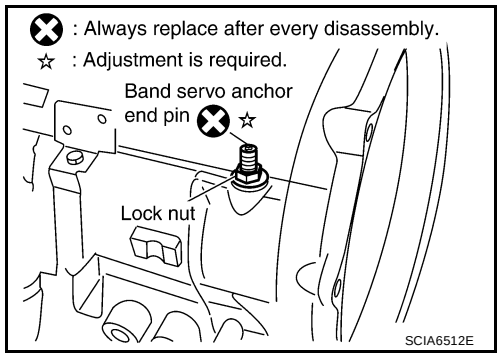

49. Install brake band in transmission case.

CAUTION:
Install it so that the identification to avoid incorrect installation faces the servo side.

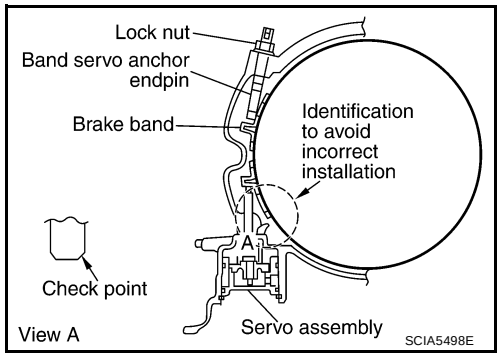

50. Install front sun gear to front carrier assembly.

CAUTION:
Apply ATF to front sun gear bearing and 3rd one-way clutch end bearing.

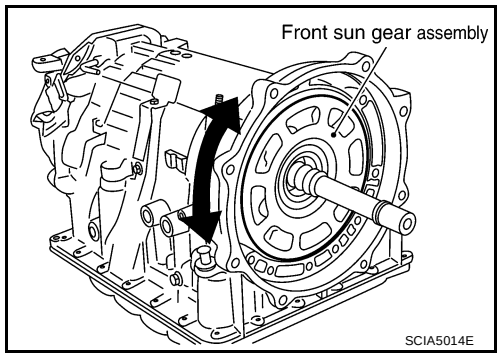

51. Install needle bearing to front sun gear.

CAUTION:
Apply petroleum jelly to needle bearing.

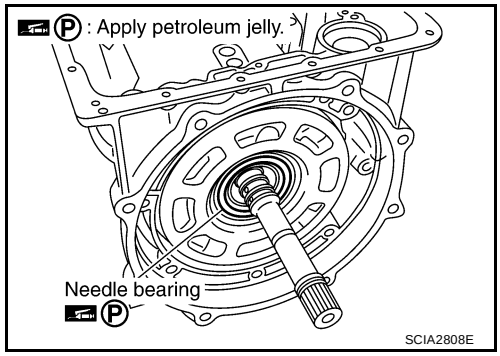

52. Adjust brake band tilting using a clip so that brake band contacts front sun gear drum evenly.

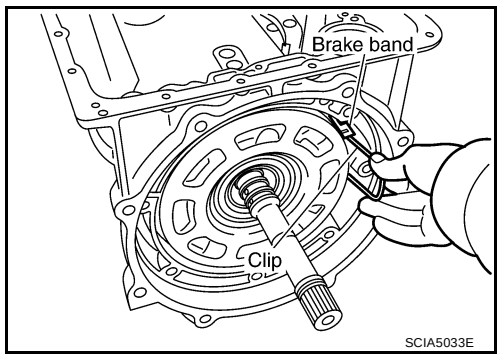

53. Adjust brake band.
a. Loosen lock nut.
b. Tighten band servo anchor end pin to specified torque.

Anchor end pin : 5.0 N·m (0.51 kg-m, 44 in-lb)

c. Back off band servo anchor end pin three turns.
d. Holding band servo anchor end pin, tighten lock nut to specified torque.

Lock nut : 46 N·m (4.7 kg-m, 34 ft-lb)

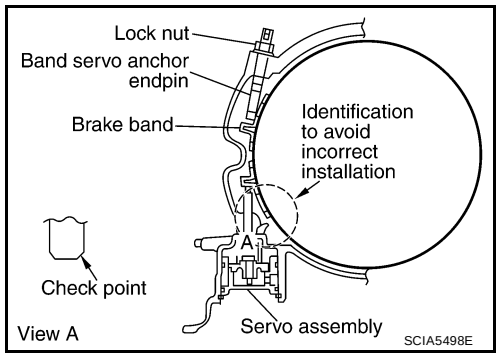

Adjustment

ECS00EMA

TOTAL END PLAY

- Measure clearance between front sun gear and bearing race for oil pump cover.
- Select proper thickness of bearing race so that end play is within specifications.

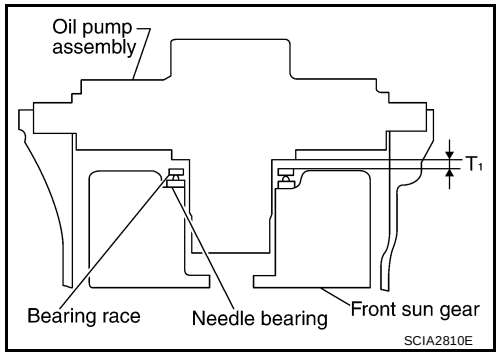

1. Measure dimensions “K” and “L” and then calculate dimension “J”.

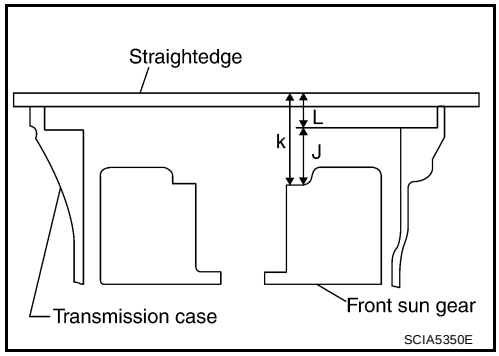

a. Measure dimension “K”.

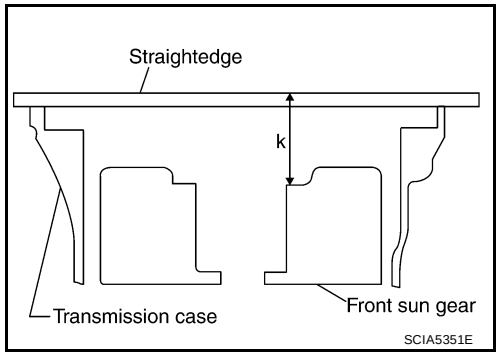

b. Measure dimension “L”.

c. Calculate dimension “J”.

“J”: Distance between oil pump fitting surface of transmission case and needle bearing mating surface of front sun gear.

J = K – L

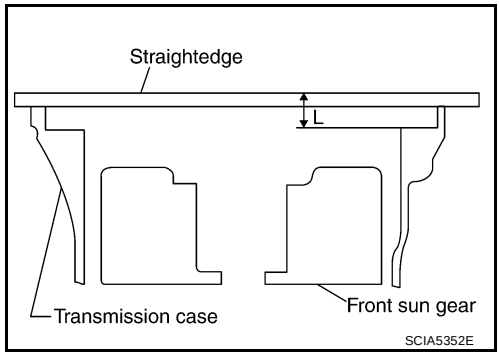

2. Measure dimensions “M_1 ” and “M_2 ” and then calculate dimension “M”.

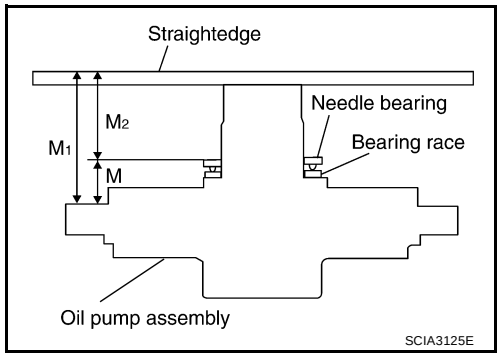

a. Place bearing race and needle bearing on oil pump assembly.

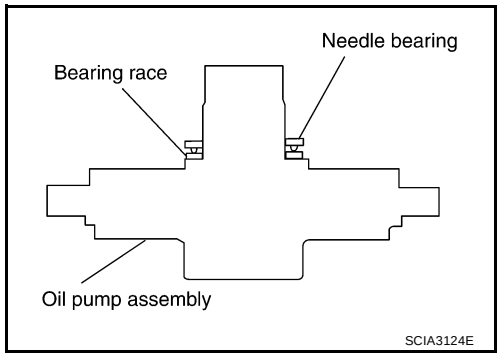

b. Measure dimension “M_1 ”.

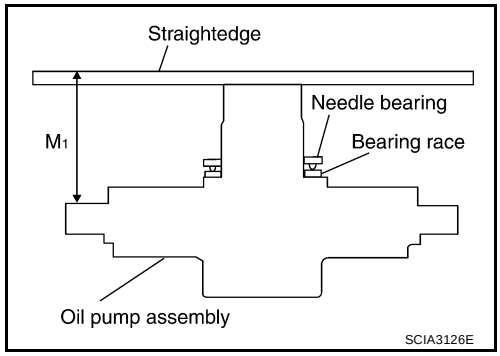

c. Measure dimension “M_2 ”.

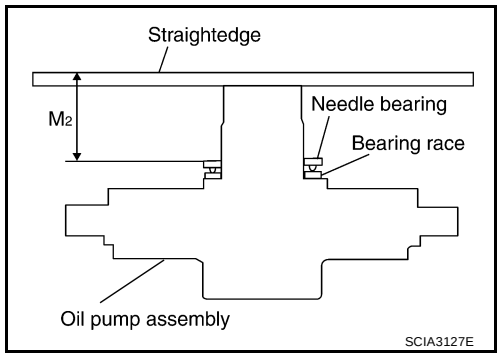

d. Calculate dimension “M”.

“M”: Distance between transmission case fitting surface of oil pump and needle bearing on oil pump.

$M = M_1 - M_2$

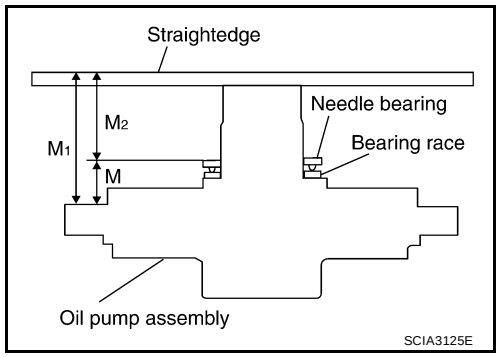

3. Adjust total end play “T_1 ”.

$T_1 = J - M$

Total end play “T_1 : 0.25 - 0.55 mm (0.0098 - 0.0217 in) ”

- Select proper thickness of bearing race so that total end play is within specifications.

Bearing races :Refer to AT-321, "BEARING RACE FOR ADJUSTING TOTAL END PLAY" .

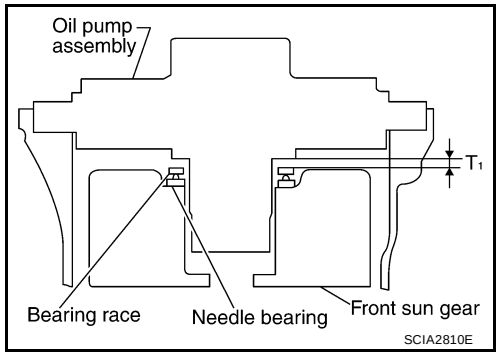

Assembly (2)

ECS00EMB

1. Install O-ring to oil pump assembly.

CAUTION:
- **Do not reuse O-ring.**
- **Apply ATF to O-ring.**

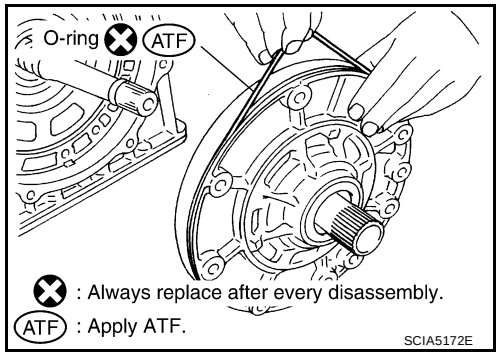

2. Install bearing race to oil pump assembly.

CAUTION:
Apply petroleum jelly to bearing race.

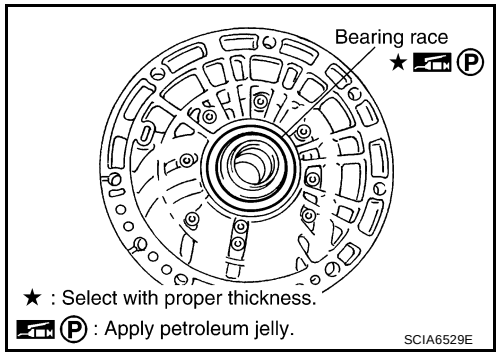

3. Install oil pump assembly in transmission case.

CAUTION:
Apply ATF to oil pump baring.

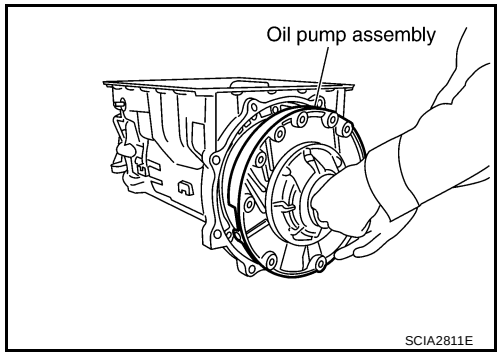

4. Apply recommended sealant (Genuine RTV Silicone Sealant or equivalent. Refer to GI-47, "Recommended Chemical Products and Sealants" .) to oil pump assembly as shown.

CAUTION:
Completely remove all moisture, oil, old sealant and any foreign material from the oil pump bolts and oil pump bolt mating surfaces.

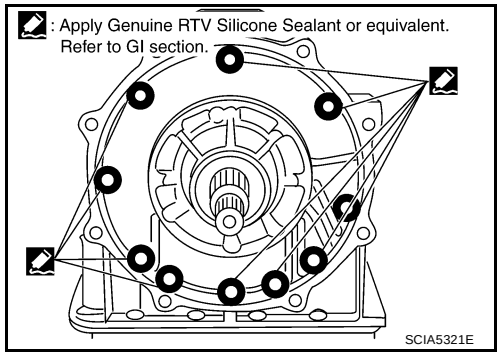

5. Tighten oil pump bolts to specified torque.

Oil pump bolts : 48 N·m (4.9 kg-m, 35 ft-lb)

CAUTION:
Apply ATF to oil pump bushing.

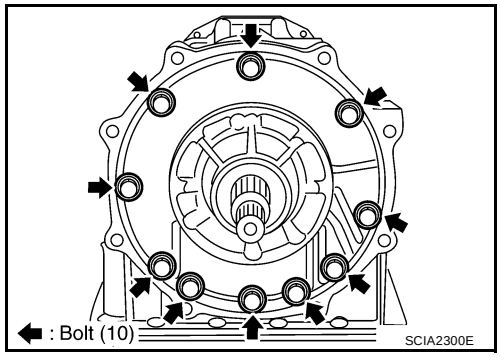

6. Install O-ring to input clutch assembly.

CAUTION:
- **Do not reuse O-ring.**
- **Apply ATF to O-ring.**

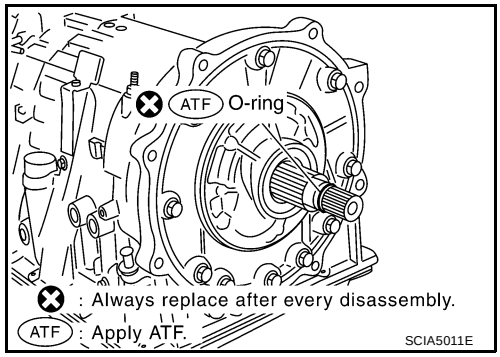

7. Install converter housing to transmission case and tighten bolts to specified torque.

Converter housing bolt : 52 N·m (5.3 kg-m, 38 ft-lb)
Self-sealing bolt (A) : 61 N·m (6.2 kg-m, 45 ft-lb)

CAUTION:
Do not reuse self-sealing bolt (A).

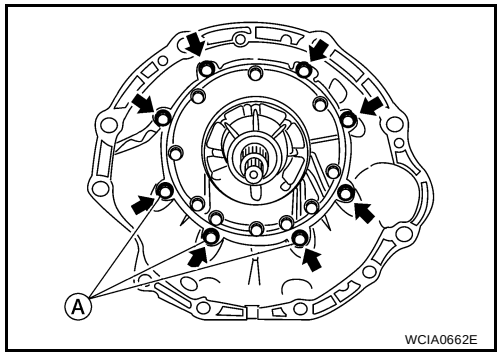

8. Make sure that brake band does not close turbine revolution sensor hole.

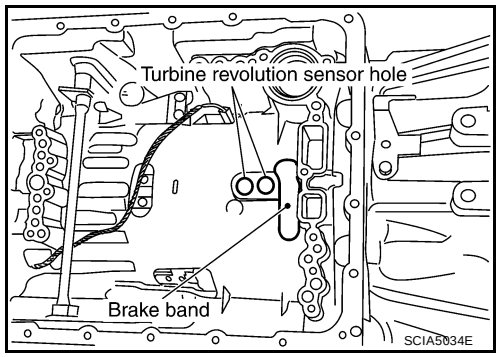

9. Install control valve with TCM.

a. Connect TCM connector and park/neutral position switch connector.

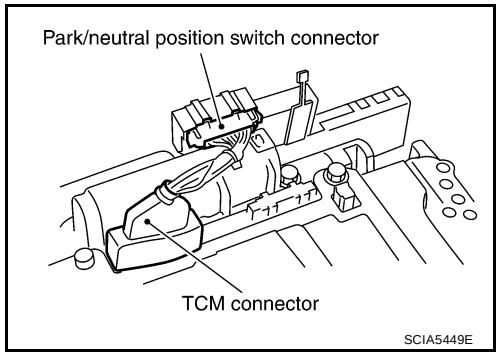

b. Install A/T assembly harness connector to control valve with TCM.

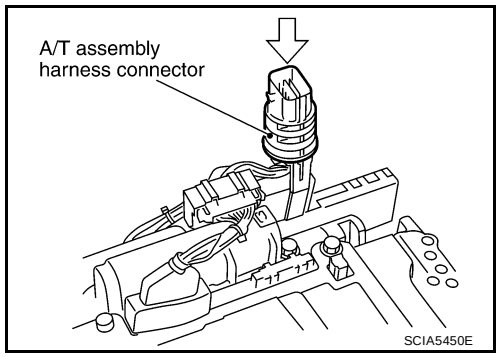

c. Connect TCM connectors.

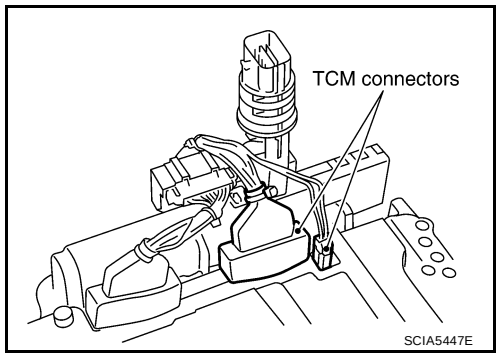

d. Install O-ring to A/T assembly harness connector.

CAUTION:
- **Do not reuse O-ring.**
- **Apply ATF to O-ring.**

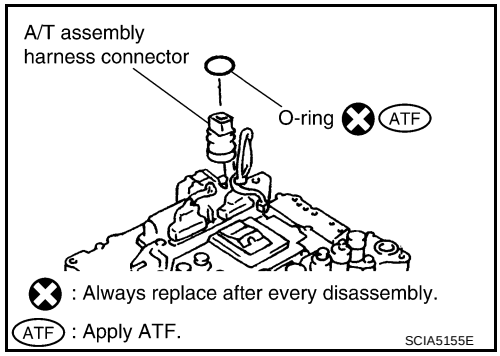

e. Install A/T fluid temperature sensor 2 to bracket.

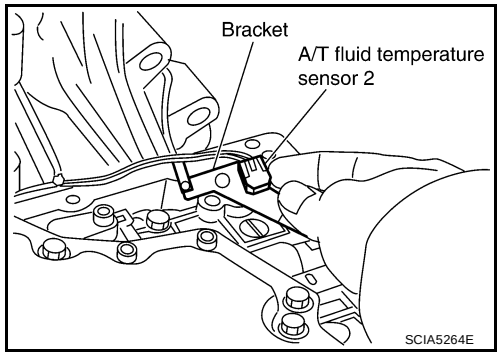

f. Install A/T fluid temperature sensor 2 (with bracket) to control valve with TCM and tighten bolt to specified torque.

Bracket bolt : 7.9 N·m (0.81 kg-m, 70 in-lb)

CAUTION:
Adjust bolt hole of bracket to bolt hole of control valve.

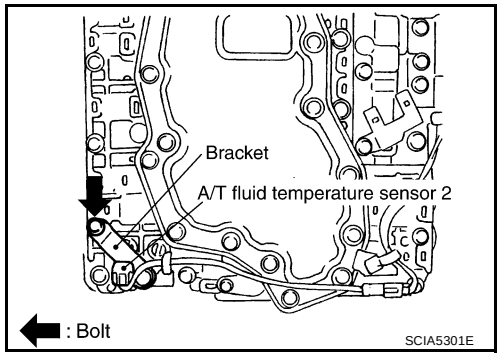

g. Install control valve with TCM in transmission case.

CAUTION:
- **Make sure that turbine revolution sensor is securely installed into turbine revolution sensor hole.**
- **Hang down revolution sensor harness toward outside so as not to disturb installation of control valve with TCM.**
- **Adjust A/T assembly harness connector of control valve with TCM to terminal hole of transmission case.**

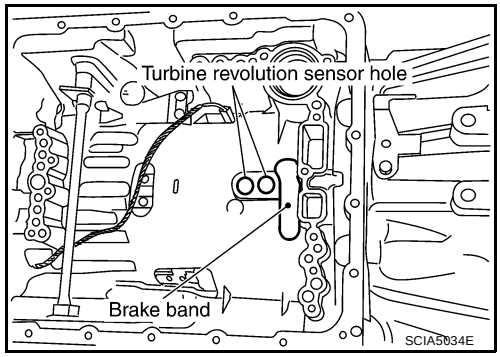

- **Assemble it so that manual valve cutout is engaged with manual plate projection.**

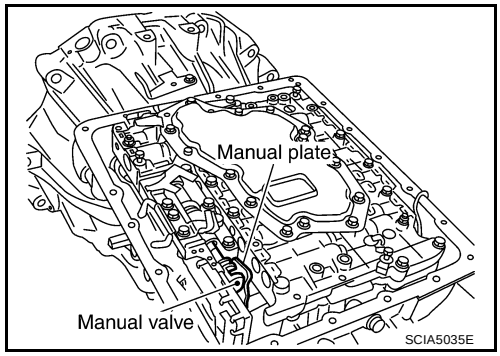

h. Install bolts (A), (B) and (C) to control valve with TCM.

Bolt symbol	Length mm (in)	Number of bolts
A	42 (1.65)	5
B	55 (2.17)	6
C	40 (1.57)	1

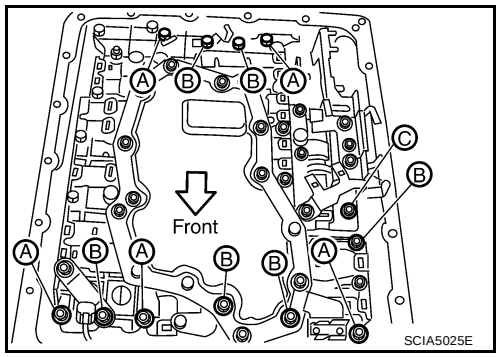

i. Tighten bolt (1), (2) and (3) temporarily to prevent dislocation. After that tighten them in order (1 → 2 → 3), and then tighten other bolts.

Bolts : 7.9 N·m (0.81 kg-m, 70 in-lb)

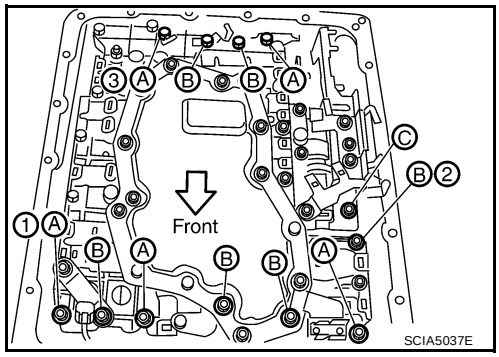

10. Connect A/T fluid temperature sensor 2 connector.
11. Securely fasten terminal cord assembly and A/T fluid temperature sensor 2 harness with terminal clips.

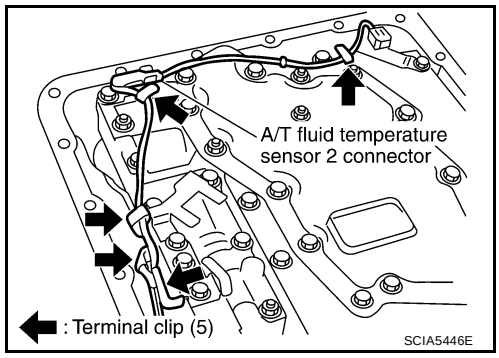

12. Connect revolution sensor connector.
13. Securely fasten revolution sensor harness with terminal clip.

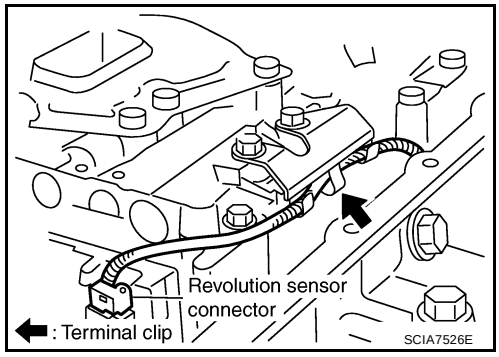

14. Pull down A/T assembly harness connector.

CAUTION:
Do not damage connector.

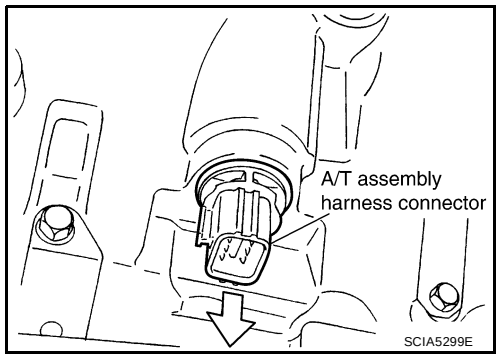

15. Install snap ring to A/T assembly harness connector.

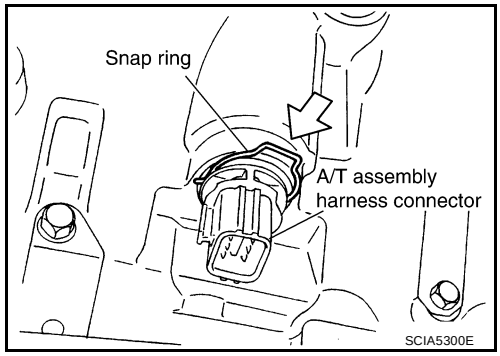

16. Install magnets in oil pan.

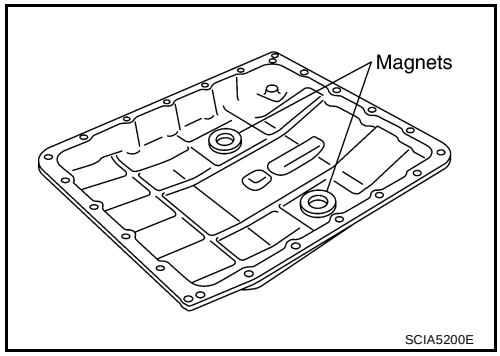

17. Install oil pan to transmission case.

a. Install oil pan gasket to transmission case.

CAUTION:

- **Do not reuse oil pan gasket.**
- **Install it in the direction to align hole positions.**
- **Completely remove all moisture, oil, old gasket and any foreign material from oil pan gasket mating surface.**

b. Install oil pan to transmission case.

CAUTION:

- **Install it so that drain plug is in the position as shown.**
- **Do not pinch harnesses.**
- **Completely remove all moisture, oil, old gasket and any foreign material from oil pan gasket mating surface.**

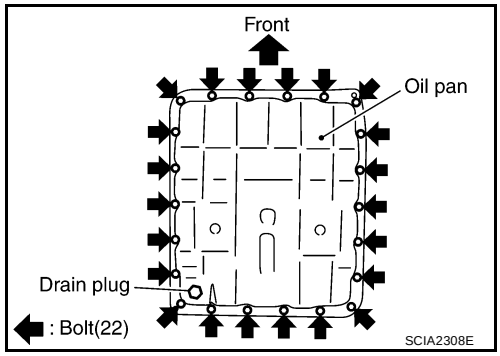

c. Temporarily tighten the oil pan bolts, then tighten them to the specified torque in the numerical order shown.

Oil pan bolts : 7.9 N·m (0.81 kg-m, 70 in-lb)

CAUTION:
Do not reuse oil pan bolts.

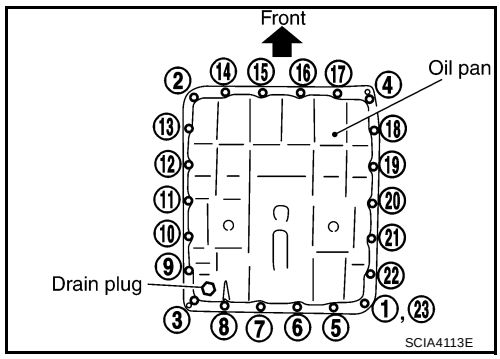

18. Install drain plug to oil pan.

Drain plug : 34 N·m (3.5 kg-m, 25 ft-lb)

CAUTION:
Do not reuse drain plug gasket.

19. Install torque converter.

a. Pour ATF into torque converter.

NOTE:

- Approximately 2 liters (2-1/8 US qt, 1-3/4 Imp qt) of fluid is required for a new torque converter.
- When reusing old torque converter, add the same amount of fluid as was drained.

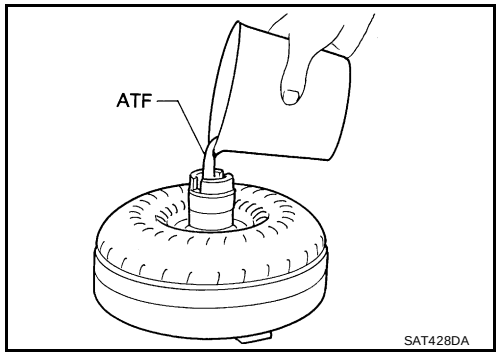

b. Install torque converter while aligning notches of torque converter with notches of oil pump.

CAUTION:

Install torque converter while rotating it.

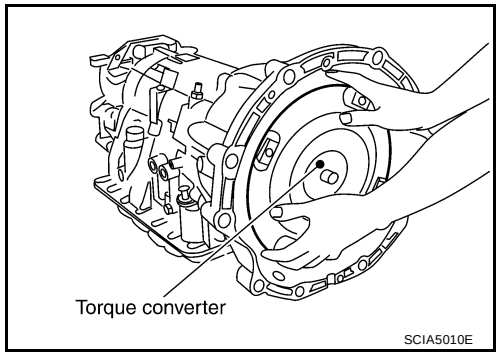

c. Measure distance "A" to make sure that torque converter is in proper position.

Distance "A" : 25.0 mm (0.98 in) or more

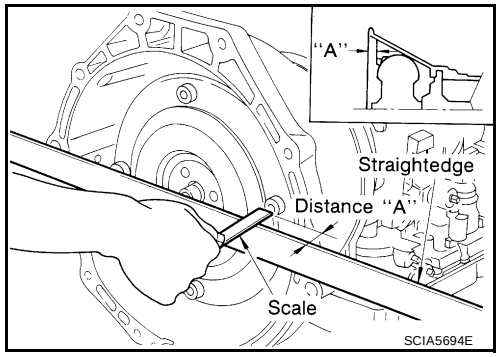

SERVICE DATA AND SPECIFICATIONS (SDS)

PFP:00030

General Specifications

ECS00EMC

Applied model		2WD	4WD
Automatic transmission model		RE5R05A	
Transmission model code number		98X0A	98X0B
Stall torque ratio		1.76: 1	
Transmission gear ratio	1st	3.842	
	2nd	2.353	
	3rd	1.529	
	4th	1.000	
	5th	0.839	
	Reverse	2.765	
Recommended fluid		Genuine NISSAN Matic J ATF*1	
Fluid capacity		10.3 liter (10-7/8 US qt, 9-1/8 Imp qt)	

CAUTION:

- **Use only Genuine NISSAN Matic J ATF. Do not mix with other fluid.**
- **Using automatic transmission fluid other than Genuine NISSAN Matic J ATF will deteriorate in driveability and automatic transmission durability, and may damage the automatic transmission, which is not covered by the warranty.**

*1: Refer to MA-11, "Fluids and Lubricants" .

Vehicle Speed at Which Gear Shifting Occurs

ECS00EMD

2WD MODELS

Final gear ratio	Tire size	Throttle position	Vehicle speed km/h (MPH)							
			$D_1 \rightarrow D_2$	$D_2 \rightarrow D_3$	$D_3 \rightarrow D_4$	$D_4 \rightarrow D_5$	$D_5 \rightarrow D_4$	$D_4 \rightarrow D_3$	$D_3 \rightarrow D_2$	$D_2 \rightarrow D_1$
2.937	P265/70R16 P265/65R17	Full throttle	66 - 74 (41 - 46)	108 - 118 (68 - 74)	166 - 182 (104 - 114)	242 - 266 (151 - 166)	238 - 262 (149 - 164)	154 - 170 (96 - 106)	94 - 104 (59 - 65)	42 - 48 (26 - 30)
		Half throttle	53 - 59 (33 - 37)	86 - 96 (54 - 60)	134 - 149 (84 - 93)	158 - 174 (99 - 109)	125 - 137 (78 - 86)	79 - 85 (49 - 53)	54 - 61 (34 - 38)	12 - 14 (7 - 9)
3.133	P265/75R16	Full throttle	66 - 74 (41 - 46)	108 - 118 (68 - 74)	166 - 182 (104 - 114)	242 - 266 (151 - 166)	238 - 262 (149 - 164)	154 - 170 (96 - 106)	94 - 104 (59 - 65)	42 - 48 (26 - 30)
		Half throttle	53 - 59 (33 - 37)	86 - 96 (54 - 60)	134 - 149 (84 - 93)	158 - 174 (99 - 109)	125 - 138 (78 - 86)	79 - 86 (49 - 53)	54 - 61 (34 - 38)	12 - 14 (7 - 9)
	P265/70R16 P265/65R17	Full throttle	60 - 68 (37 - 43)	99 - 110 (61 - 69)	153 - 170 (95 - 107)	234 - 259 (146 - 162)	230 - 255 (143 - 160)	142 - 158 (88 - 99)	87 - 97 (54 - 61)	41 - 47 (25 - 30)
		Half throttle	49 - 55 (30 - 35)	80 - 90 (50 - 57)	123 - 137 (76 - 86)	149 - 165 (93 - 103)	115 - 128 (71 - 80)	71 - 79 (44 - 50)	51 - 57 (31 - 36)	12 - 14 (7 - 9)

- At half throttle, the accelerator opening is 1/2 of the full opening.

4WD MODELS

Final gear ratio	Tire size	Throttle position	Vehicle speed km/h (MPH)							
			$D_1 \rightarrow D_2$	$D_2 \rightarrow D_3$	$D_3 \rightarrow D_4$	$D_4 \rightarrow D_5$	$D_5 \rightarrow D_4$	$D_4 \rightarrow D_3$	$D_3 \rightarrow D_2$	$D_2 \rightarrow D_1$
3.133	P265/70R16 P265/65R17	Full throttle	60 - 68 (37 - 43)	99 - 110 (61 - 69)	153 - 170 (95 - 107)	234 - 259 (146 - 162)	230 - 255 (143 - 160)	142 - 158 (88 - 99)	87 - 97 (54 - 61)	41 - 47 (25 - 30)
		Half throttle	49 - 55 (30 - 35)	80 - 90 (50 - 57)	123 - 137 (76 - 86)	149 - 165 (93 - 103)	115 - 128 (71 - 80)	71 - 79 (44 - 50)	51 - 57 (31 - 36)	12 - 14 (7 - 9)
3.357	P265/75R16	Full throttle	60 - 68 (37 - 43)	99 - 110 (61 - 69)	153 - 170 (95 - 107)	234 - 259 (146 - 162)	230 - 255 (143 - 160)	142 - 158 (88 - 99)	87 - 97 (54 - 61)	41 - 47 (25 - 30)
		Half throttle	49 - 55 (30 - 35)	80 - 90 (50 - 57)	123 - 137 (76 - 86)	149 - 165 (93 - 103)	115 - 128 (71 - 80)	71 - 79 (44 - 50)	51 - 57 (31 - 36)	12 - 14 (7 - 9)
	P265/70R16 P265/65R17	Full throttle	58 - 65 (36 - 41)	94 - 104 (58 - 65)	144 - 160 (90 - 100)	221 - 245 (138 - 154)	218 - 241 (136 - 151)	135 - 150 (84 - 94)	82 - 92 (51 - 58)	40 - 45 (25 - 29)
		Half throttle	46 - 52 (28 - 33)	76 - 84 (47 - 53)	117 - 130 (73 - 82)	140 - 156 (88 - 98)	109 - 121 (68 - 76)	67 - 75 (41 - 47)	48 - 54 (30 - 34)	12 - 14 (7 - 9)

- At half throttle, the accelerator opening is 1/2 of the full opening.

Vehicle Speed at Which Lock-up Occurs/Releases

ECS00EME

2WD MODELS

Final gear ratio	Tire size	Throttle position	Vehicle speed km/h (MPH)	
			Lock-up “ON”	Lock-up “OFF”
2.937	P265/70R16 P265/65R17	Closed throttle	71 - 79 (44 - 49)	68 - 76 (43 - 48)
		Half throttle	175 - 195 (109 - 122)	144 - 160 (90 - 100)
3.133	P265/75R16	Closed throttle	71 - 79 (44 - 49)	68 - 76 (43 - 48)
		Half throttle	175 - 195 (109 - 122)	144 - 160 (90 - 100)
	P265/70R16 P265/65R17	Closed throttle	66 - 74 (41 - 46)	63 - 71 (39 - 44)
		Half throttle	166 - 186 (104 - 116)	132 - 148 (83 - 93)

- At closed throttle, the accelerator opening is less than 1/8 condition. (Closed throttle position signal: OFF)
- At half throttle, the accelerator opening is 1/2 of the full opening.

4WD MODELS

Final gear ratio	Tire size	Throttle position	Vehicle speed km/h (MPH)	
			Lock-up “ON”	Lock-up “OFF”
3.133	P265/70R16 P265/65R17	Closed throttle	66 - 74 (41 - 46)	63 - 71 (39 - 44)
		Half throttle	166 - 186 (104 - 116)	132 - 148 (76 - 93)
3.357	P265/75R16	Closed throttle	66 - 74 (41 - 46)	63 - 71 (39 - 44)
		Half throttle	166 - 186 (104 - 116)	132 - 148 (76 - 93)
	P265/70R16 P265/65R17	Closed throttle	62 - 70 (39 - 44)	59 - 67 (37 - 42)
		Half throttle	157 - 175 (98 - 109)	126 - 140 (79 - 88)

- At closed throttle, the accelerator opening is less than 1/8 condition. (Closed throttle position signal: OFF)
- At half throttle, the accelerator opening is 1/2 of the full opening.

Stall Speed

ECS00EMF

Stall speed	2,200 - 2,500 rpm

Line Pressure

ECS00EMG

Engine speed	Line pressure [kPa (kg/cm^2 , psi)]	
	"R" position	"D" position
At idle speed	425 - 465 (4.3 - 4.7, 62 - 67)	379 - 428 (3.9 - 4.4, 55 - 62)
At stall speed	1,605 - 1,950 (16.4 - 19.9, 233 - 283)	1,310 - 1,500 (13.4 - 15.3, 190 - 218)

A/T Fluid Temperature Sensor

ECS00EMH

Name	Condition	CONSULT-II "DATA MONITOR" (Approx.) (V)	Resistance (Approx.) (kΩ)
A/T fluid temperature sensor 1	0°C (32°F)	3.3	15
	20°C (68°F)	2.7	6.5
	80°C (176°F)	0.9	0.9
A/T fluid temperature sensor 2	0°C (32°F)	3.3	10
	20°C (68°F)	2.5	4
	80°C (176°F)	0.7	0.5

Turbine Revolution Sensor

ECS00EMI

Name	Condition	Data (Approx.)
Turbine revolution sensor 1	When running at 50 km/h (31 MPH) in 4th speed with the closed throttle position signal "OFF".	1.3 (kHz)
Turbine revolution sensor 2	When moving at 20 km/h (12 MPH) in 1st speed with the closed throttle position signal "OFF".	

Vehicle Speed Sensor A/T (Revolution Sensor)

ECS00EMJ

Name	Condition	Data (Approx.)
Revolution sensor	When moving at 20 km/h (12 MPH).	185 (Hz)

Reverse brake

ECS00EMK

	Thickness mm (in)	Part number*
Thickness of retaining plates	4.2 (0.165)	31667 90X14
	4.4 (0.173)	31667 90X15
	4.6 (0.181)	31667 90X16
	4.8 (0.189)	31667 90X17
	5.0 (0.197)	31667 90X18
	5.2 (0.205)	31667 90X19

*: Always check with the Parts Department for the latest parts information.

Total End Play

ECS00EML

Total end play mm (in)	0.25 - 0.55 (0.0098 - 0.0217)

BEARING RACE FOR ADJUSTING TOTAL END PLAY

Thickness mm (in)	Part number*
0.8 (0.031)	31435 95X00
1.0 (0.039)	31435 95X01
1.2 (0.047)	31435 95X02
1.4 (0.055)	31435 95X03
1.6 (0.063)	31435 95X04
1.8 (0.071)	31435 95X05

*: Always check with the Parts Department for the latest parts information.