SECTION PG

POWER SUPPLY, GROUND & CIRCUIT ELEMENTS

CONTENTS

PRECAUTIONS

PFP:00011

Precautions for Supplemental Restraint System (SRS) “AIR BAG” and “SEAT BELT PRE-TENSIONER”

EKS007QA

The Supplemental Restraint System such as “AIR BAG” and “SEAT BELT PRE-TENSIONER”, used along with a front seat belt, helps to reduce the risk or severity of injury to the driver and front passenger for certain types of collision. This system includes seat belt switch inputs and dual stage front air bag modules. The SRS system uses the seat belt switches to determine the front air bag deployment, and may only deploy one front air bag, depending on the severity of a collision and whether the front occupants are belted or unbelted.
Information necessary to service the system safely is included in the SRS and SB section of this Service Manual.

WARNING:

- **To avoid rendering the SRS inoperative, which could increase the risk of personal injury or death in the event of a collision which would result in air bag inflation, all maintenance must be performed by an authorized NISSAN/INFINITI dealer.**
- **Improper maintenance, including incorrect removal and installation of the SRS, can lead to personal injury caused by unintentional activation of the system. For removal of Spiral Cable and Air Bag Module, see the SRS section.**
- **Do not use electrical test equipment on any circuit related to the SRS unless instructed to in this Service Manual. SRS wiring harnesses can be identified by yellow and/or orange harnesses or harness connectors.**

Wiring Diagrams and Trouble Diagnosis

EKS007QB

When you read wiring diagrams, refer to the following:

- Refer to GI-15, "How to Read Wiring Diagrams" in GI section.
- Refer to PG-4, "POWER SUPPLY ROUTING CIRCUIT" for power distribution.

When you perform trouble diagnosis, refer to the following:

- Refer to GI-11, "HOW TO FOLLOW TEST GROUPS IN TROUBLE DIAGNOSES" in GI section.
- Refer to GI-27, "How to Perform Efficient Diagnosis for an Electrical Incident" in GI section.

POWER SUPPLY ROUTING CIRCUIT

PFP:24110

Schematic

EKS007QC

For detailed ground distribution, refer to PG-29, "Ground Distribution" .

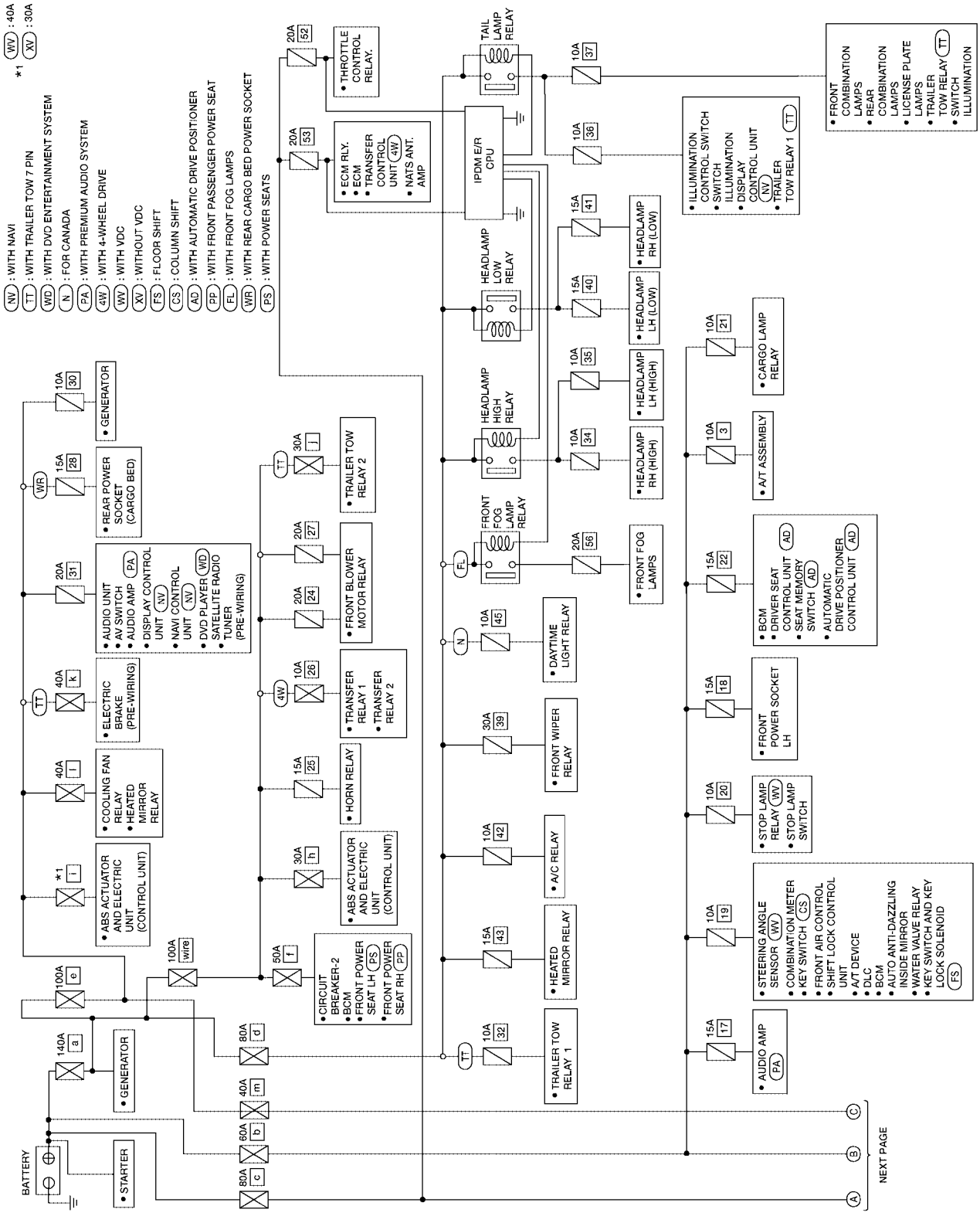

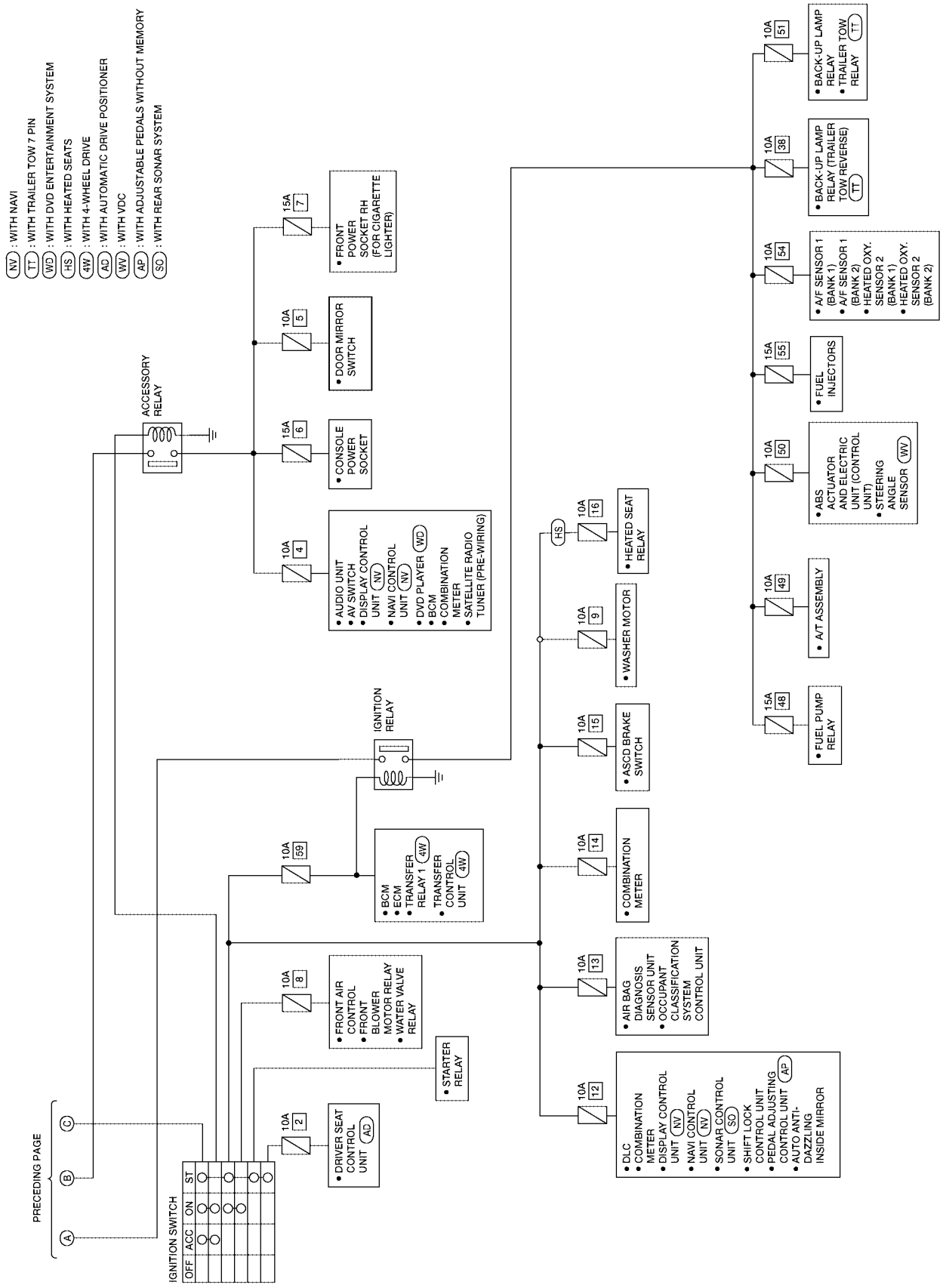
NV : WITH NAVI
TT : WITH TRAILER TOW 7 PIN
WD : WITH DVD ENTERTAINMENT SYSTEM
HS : WITH HEATED SEATS
4W : WITH 4-WHEEL DRIVE
AD : WITH AUTOMATIC DRIVE POSITIONER
WV : WITH VDC
AP : WITH ADJUSTABLE PEDALS WITHOUT MEMORY
SO : WITH REAR SONAR SYSTEM
PRECEDING PAGE
A
B
C
IGNITION SWITCH
OFF
ACC
ON
ST
ACCESSORY RELAY
IGNITION RELAY
10A 2
DRIVER SEAT CONTROL UNIT AD
10A 8
FRONT AIR CONTROL
FRONT BLOWER MOTOR RELAY
WATER VALVE RELAY
STARTER RELAY
10A 59
BCM
ECM
TRANSFER RELAY 1 4W
TRANSFER CONTROL UNIT 4W
10A 4
AUDIO UNIT
AV SWITCH
DISPLAY CONTROL UNIT NV
NAVI CONTROL UNIT NV
DVD PLAYER WD
BCM
COMBINATION METER
SATELLITE RADIO TUNER (PRE-WIRING)
15A 6
CONSOLE POWER SOCKET
10A 5
DOOR MIRROR SWITCH
15A 7
FRONT POWER SOCKET RH (FOR CIGARETTE LIGHTER)
10A 12
DLC
COMBINATION METER
DISPLAY CONTROL UNIT NV
NAVI CONTROL UNIT NV
SONAR CONTROL UNIT SO
SHIFT LOCK CONTROL UNIT
PEDAL ADJUSTING CONTROL UNIT AP
AUTO ANTI-DAZZLING INSIDE MIRROR
10A 13
AIR BAG DIAGNOSIS SENSOR UNIT
OCCUPANT CLASSIFICATION SYSTEM CONTROL UNIT
10A 14
COMBINATION METER
10A 15
ASCD BRAKE SWITCH
10A 9
WASHER MOTOR
HS
10A 16
HEATED SEAT RELAY
15A 48
FUEL PUMP RELAY
10A 49
A/T ASSEMBLY
10A 50
ABS ACTUATOR AND ELECTRIC UNIT (CONTROL UNIT)
STEERING ANGLE SENSOR WV
15A 55
FUEL INJECTORS
10A 54
A/F SENSOR 1 (BANK 1)
A/F SENSOR 1 (BANK 2)
HEATED OXY. SENSOR 2 (BANK 1)
HEATED OXY. SENSOR 2 (BANK 2)
10A 38
BACK-UP LAMP RELAY (TRAILER TOW REVERSE) TT
10A 51
BACK-UP LAMP RELAY
TRAILER TOW RELAY TT

WKWA1599E

Wiring Diagram — POWER —

EKS007QD

BATTERY POWER SUPPLY — IGNITION SW. IN ANY POSITION

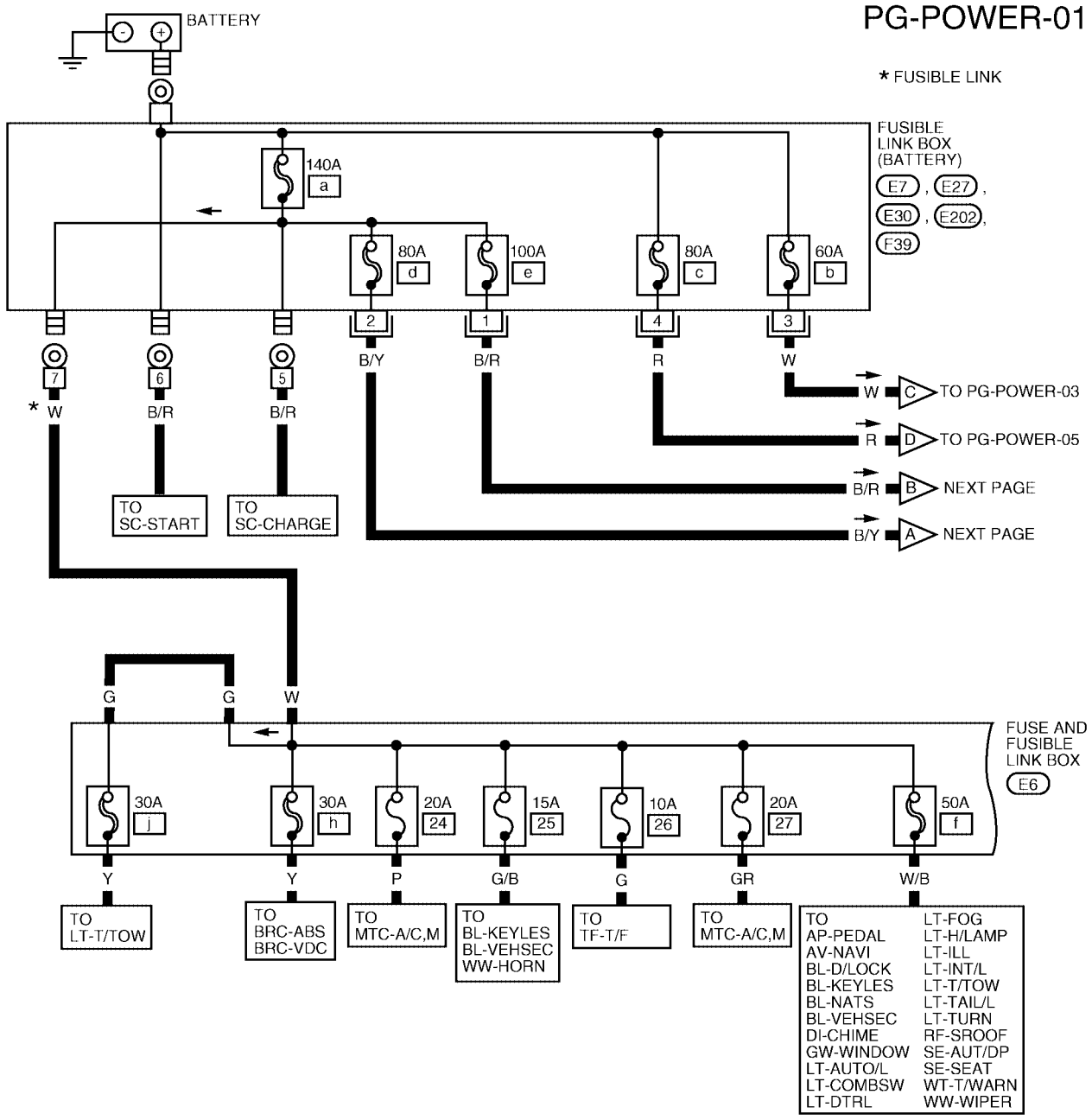

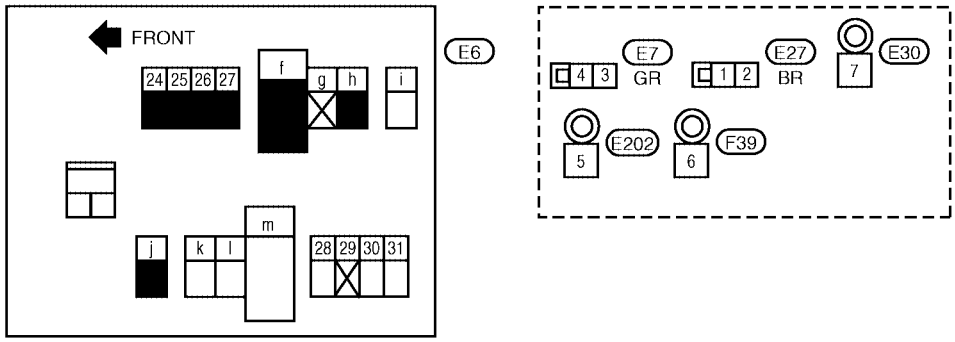

WKWA1600E

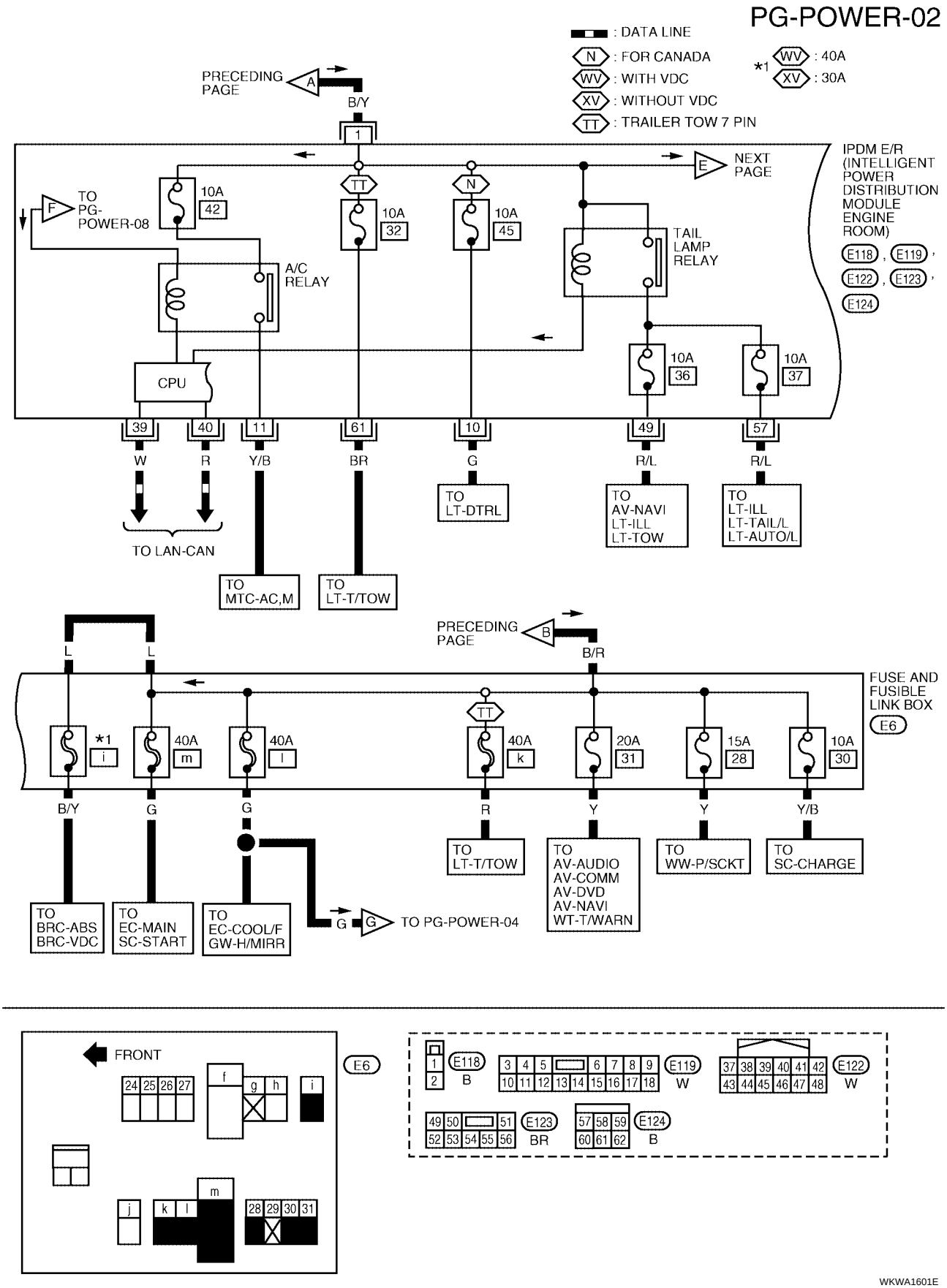
PG-POWER-02
: DATA LINE
N : FOR CANADA
WV : WITH VDC
XV : WITHOUT VDC
TT : TRAILER TOW 7 PIN
*1 WV : 40A
XV : 30A
PRECEDING PAGE
A
B/Y
1
NEXT PAGE
E
IPDM E/R (INTELLIGENT POWER DISTRIBUTION MODULE ENGINE ROOM)
E118, E119, E122, E123, E124
TO PG-POWER-08
F
10A 42
TT
10A 32
N
10A 45
A/C RELAY
TAIL LAMP RELAY
CPU
10A 36
10A 37
39
40
11
61
10
49
57
W
R
Y/B
BR
G
R/L
R/L
TO LAN-CAN
TO MTC-AC,M
TO LT-T/TOW
TO LT-DTRL
TO AV-NAVI LT-ILL LT-TOW
TO LT-ILL LT-TAIL/L LT-AUTO/L
PRECEDING PAGE
B
B/R
L
L
FUSE AND FUSIBLE LINK BOX
E6
*1 i
40A m
40A l
TT
40A k
20A 31
15A 28
10A 30
B/Y
G
G
R
Y
Y
Y/B
TO BRC-ABS BRC-VDC
TO EC-MAIN SC-START
TO EC-COOL/F GW-H/MIRR
G
G
TO PG-POWER-04
TO LT-T/TOW
TO AV-AUDIO AV-COMM AV-DVD AV-NAVI WT-T/WARN
TO WW-P/SCKT
TO SC-CHARGE
FRONT
E6
24 25 26 27
f
g
h
i
j
k
l
m
28 29 30 31
E118 B
E119 W
E122 W
E123 BR
E124 B
WKWA1601E

PG-POWER-03

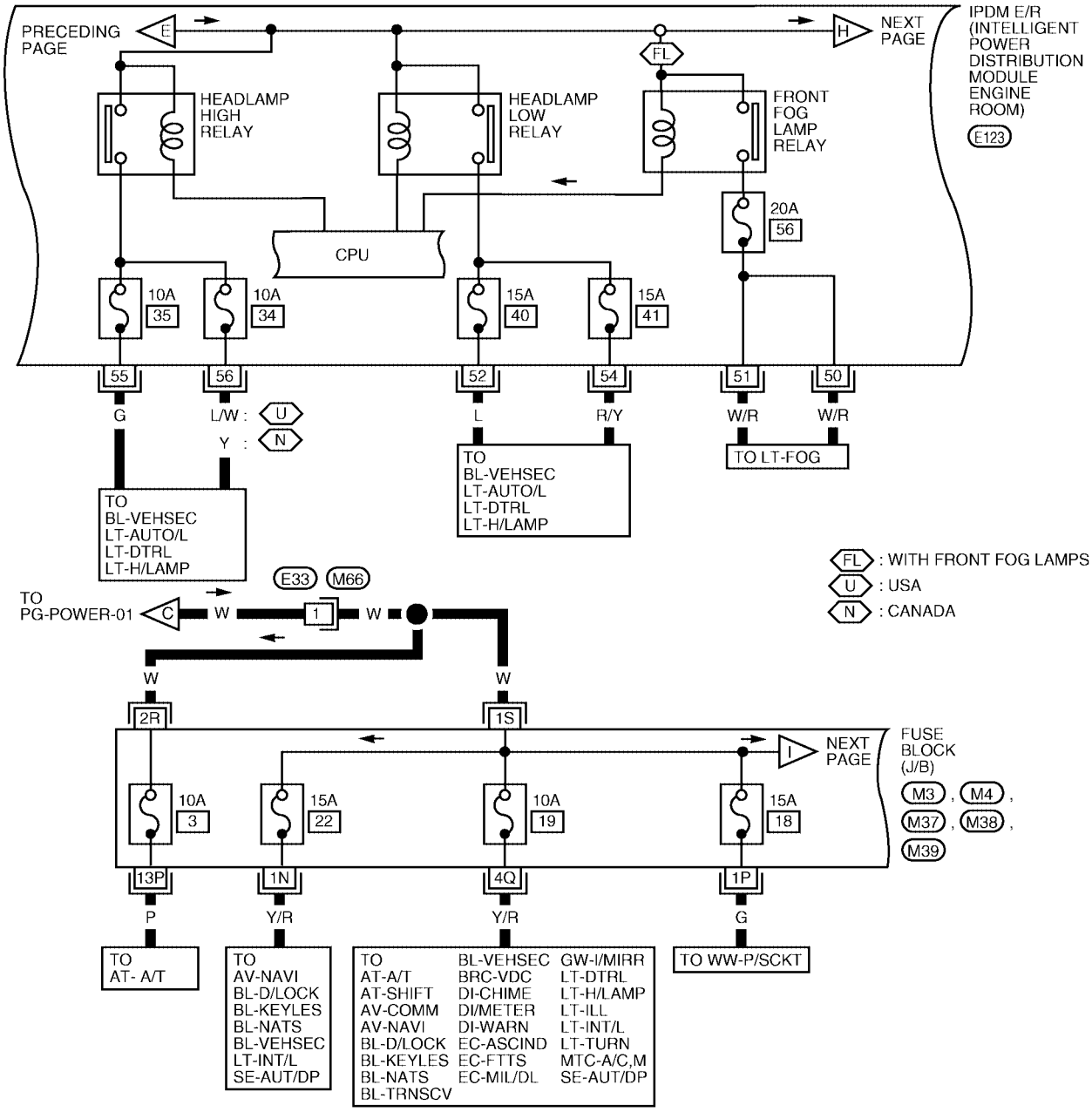

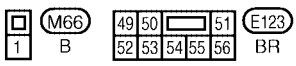

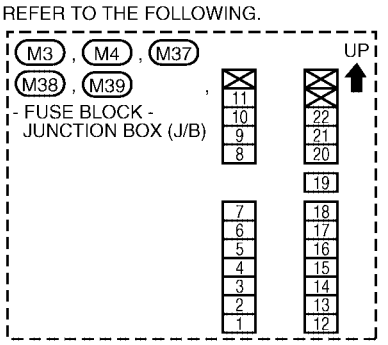

WKWA1602E

PG-POWER-04

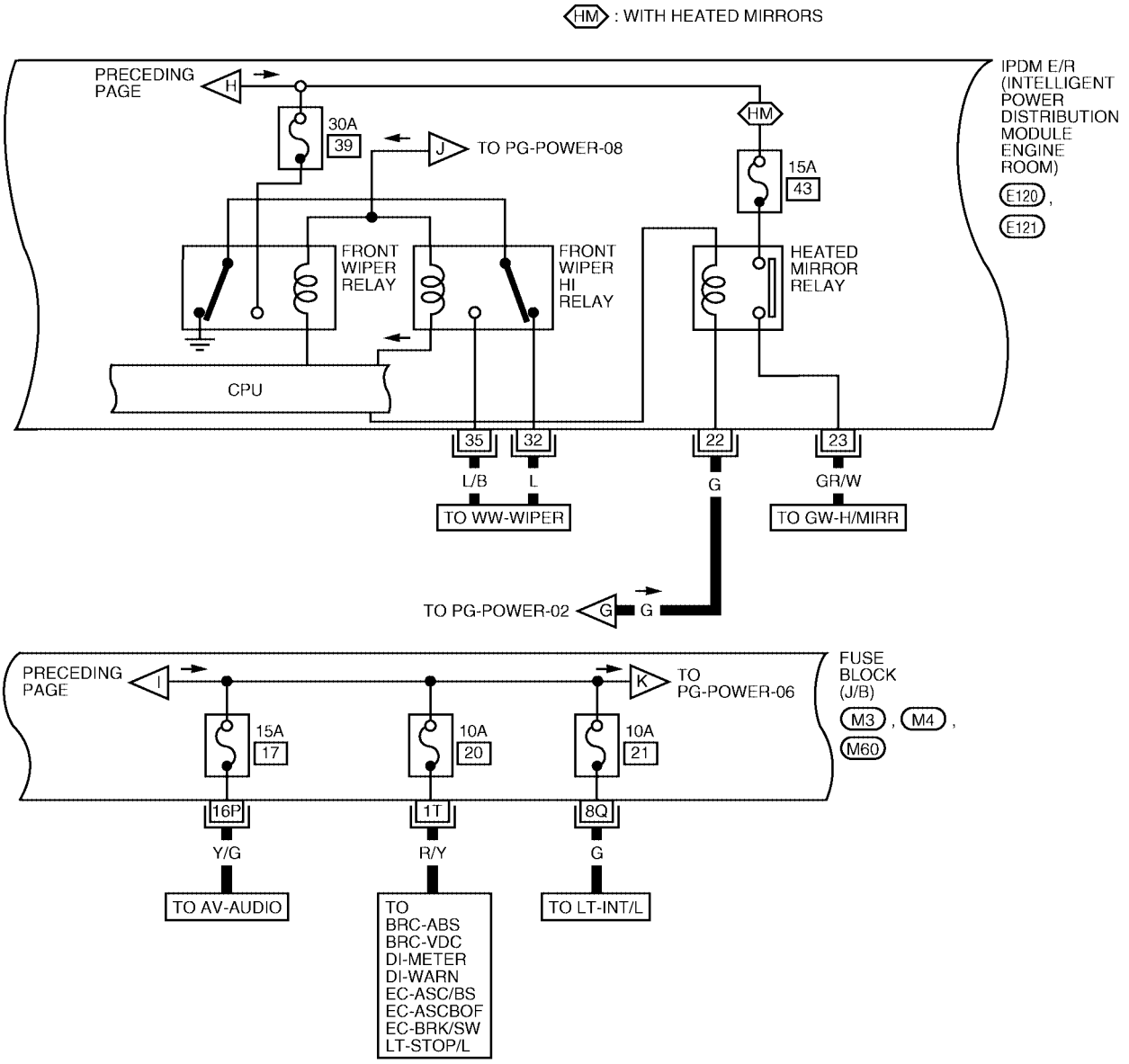
HM : WITH HEATED MIRRORS
PRECEDING PAGE
H
30A
39
J
TO PG-POWER-08
HM
15A
43
IPDM E/R (INTELLIGENT POWER DISTRIBUTION MODULE ENGINE ROOM)
E120 , E121
FRONT WIPER RELAY
FRONT WIPER HI RELAY
HEATED MIRROR RELAY
CPU
35
32
22
23
L/B
L
G
GR/W
TO WW-WIPER
TO GW-H/MIRR
TO PG-POWER-02
G
G
PRECEDING PAGE
I
K
TO PG-POWER-06
FUSE BLOCK (J/B)
M3 , M4 , M60
15A
17
10A
20
10A
21
16P
1T
8Q
Y/G
R/Y
G
TO AV-AUDIO
TO BRC-ABS BRC-VDC DI-METER DI-WARN EC-ASC/BS EC-ASCBOF EC-BRK/SW LT-STOP/L
TO LT-INT/L

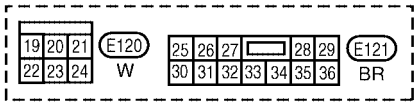
19 20 21
22 23 24
E120
W
25 26 27 28 29
30 31 32 33 34 35 36
E121
BR

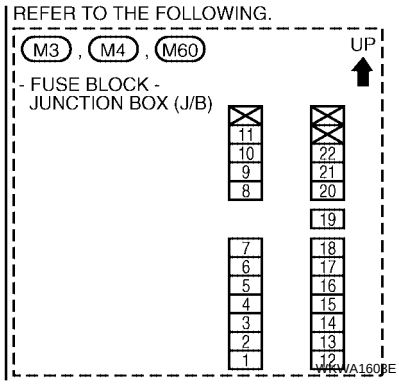
REFER TO THE FOLLOWING.
M3 , M4 , M60
UP
- FUSE BLOCK - JUNCTION BOX (J/B)
11 10 9 8
7 6 5 4 3 2 1
22 21 20
19
18 17 16 15 14 13 12
WKWA1608E

PG-POWER-05

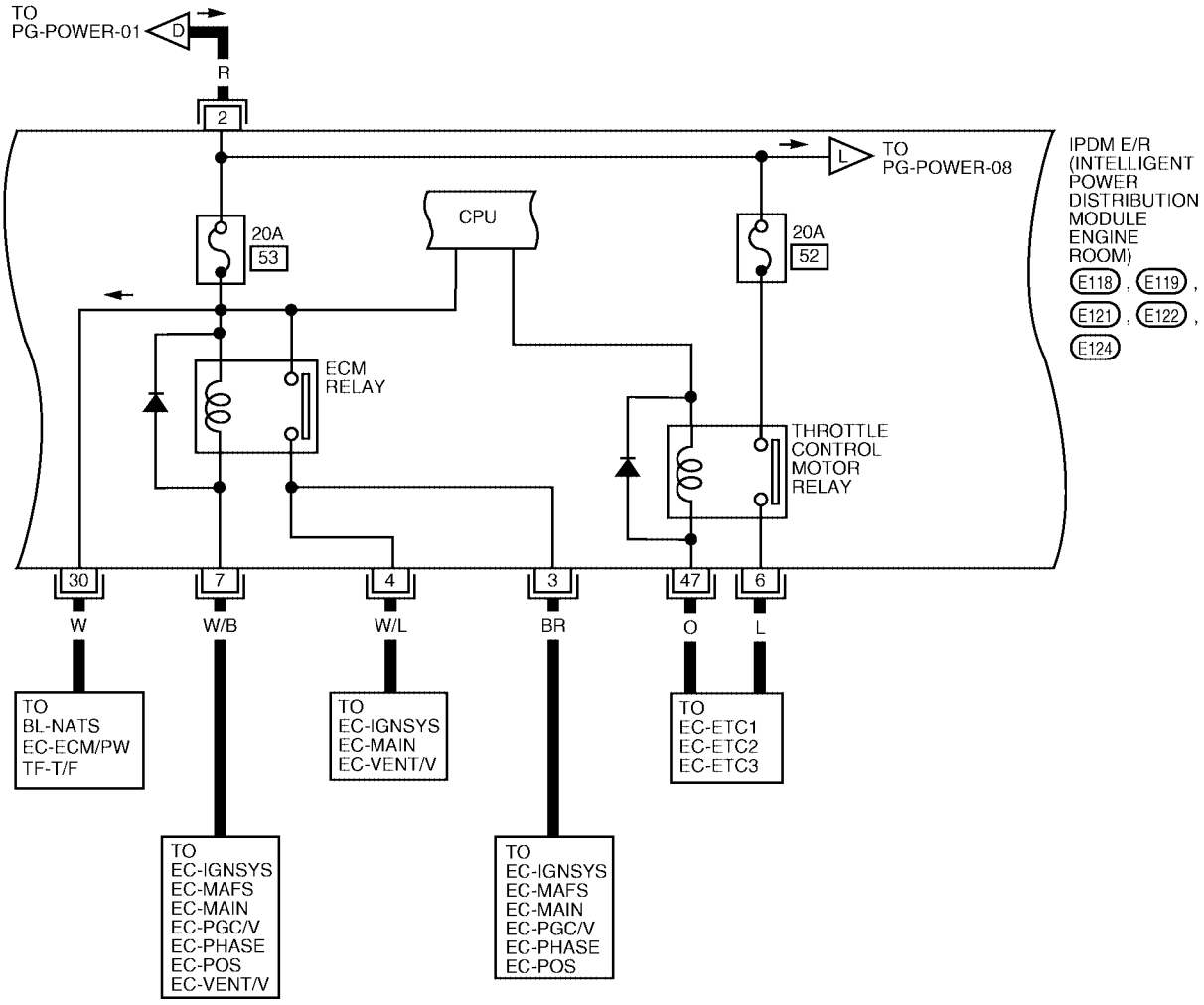

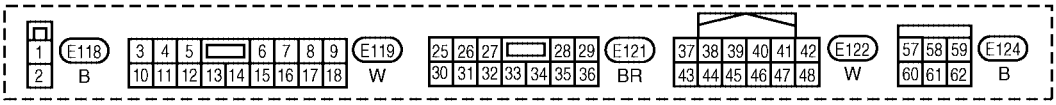

WKWA1604E

ACCESSORY POWER SUPPLY — IGNITION SW. IN ACC OR ON

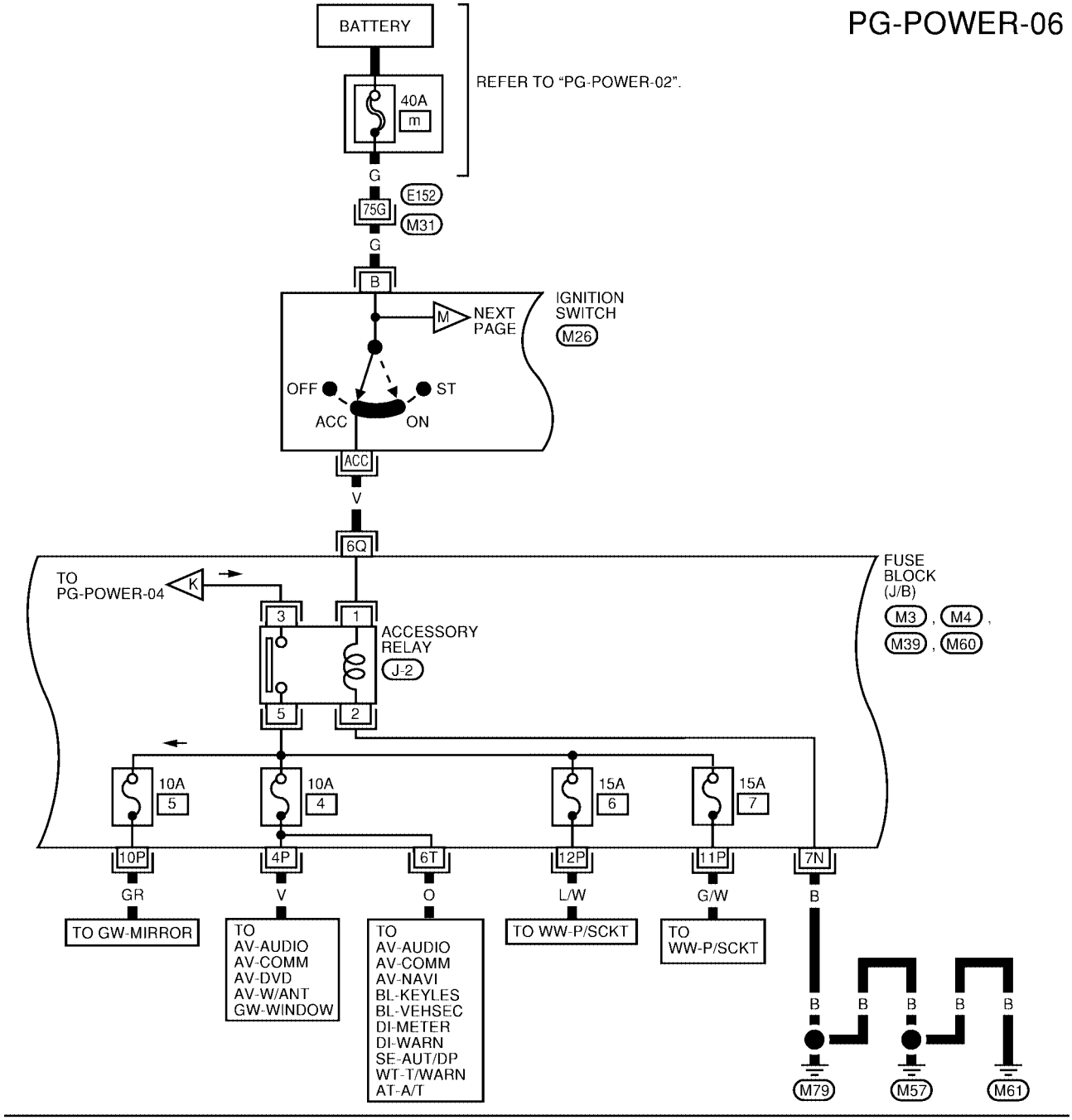

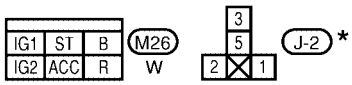

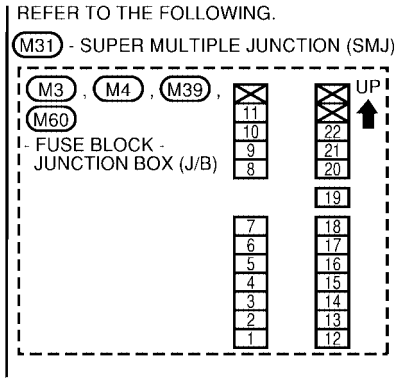

* : THIS CONNECTOR IS NOT SHOWN IN "HARNESS LAYOUT".

WKWA1605E

IGNITION POWER SUPPLY — IGNITION SW. IN ON

PG-POWER-07

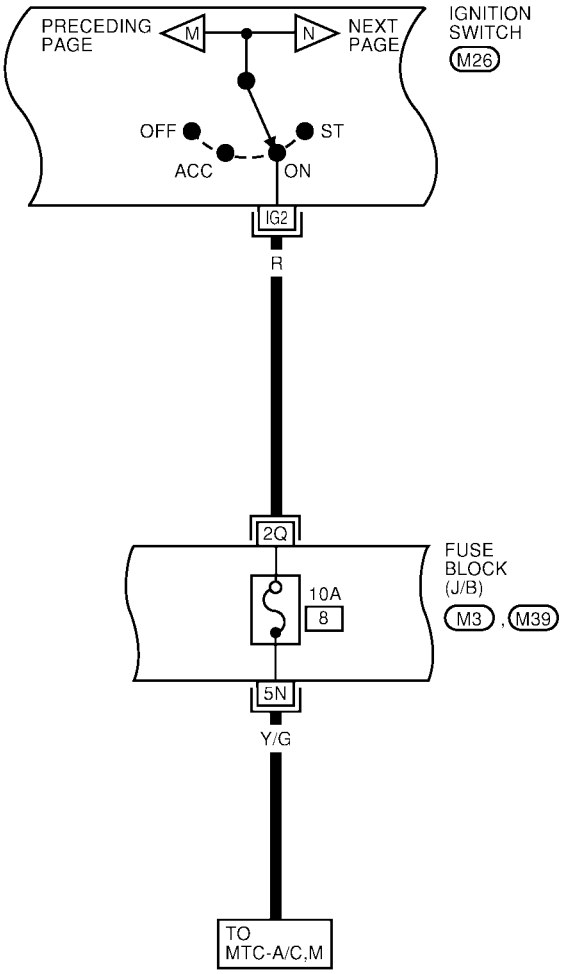

IG1	ST	B	M26
IG2	ACC	R	W

REFER TO THE FOLLOWING.

M3 , M39
- FUSE BLOCK - JUNCTION BOX (J/B)

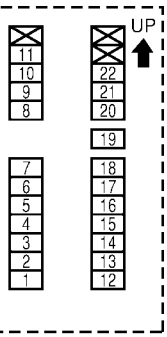

WKWA1606E

IGNITION POWER SUPPLY — IGNITION SW. IN ON AND/OR START

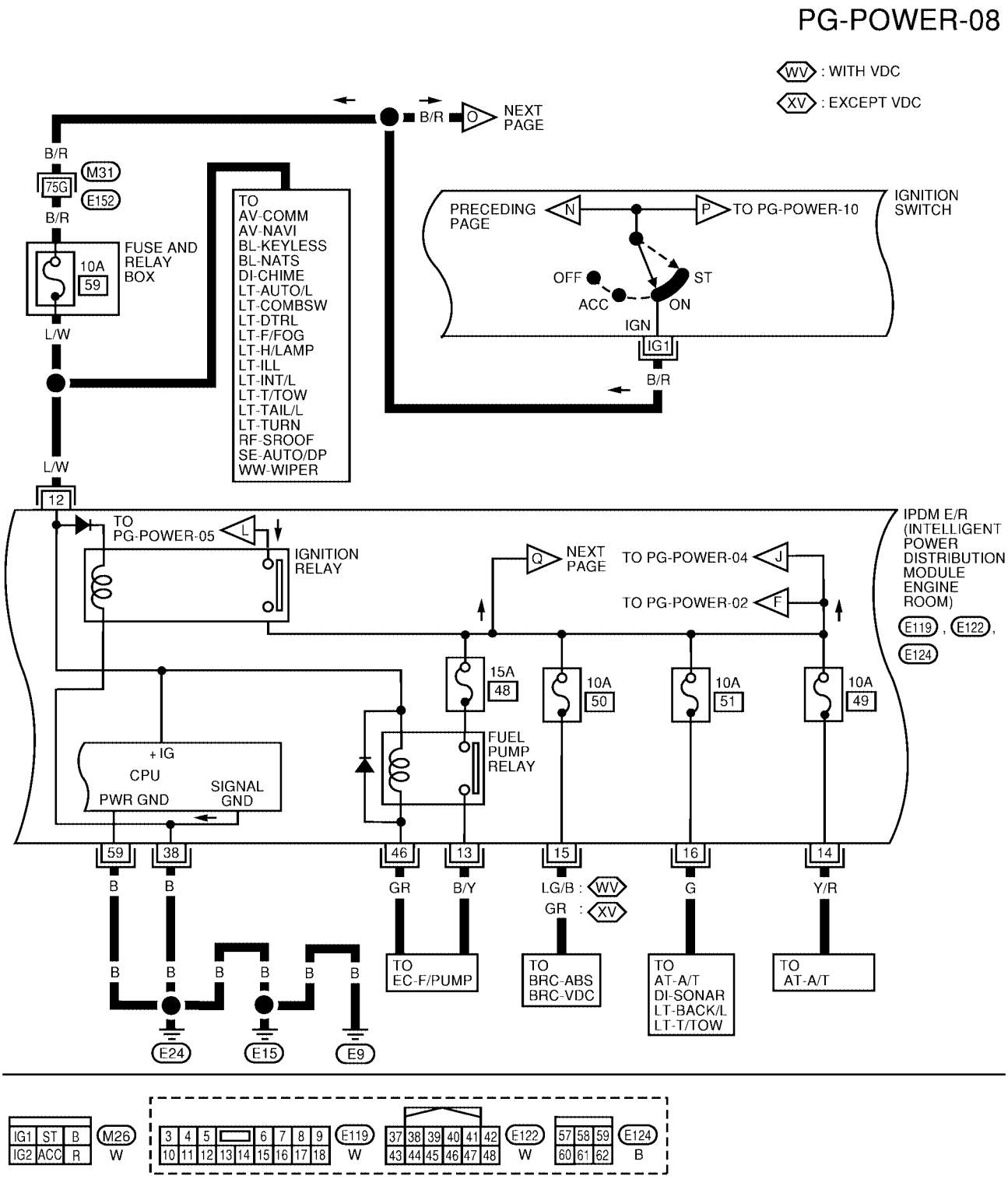

WKWA1607E

PG-POWER-09

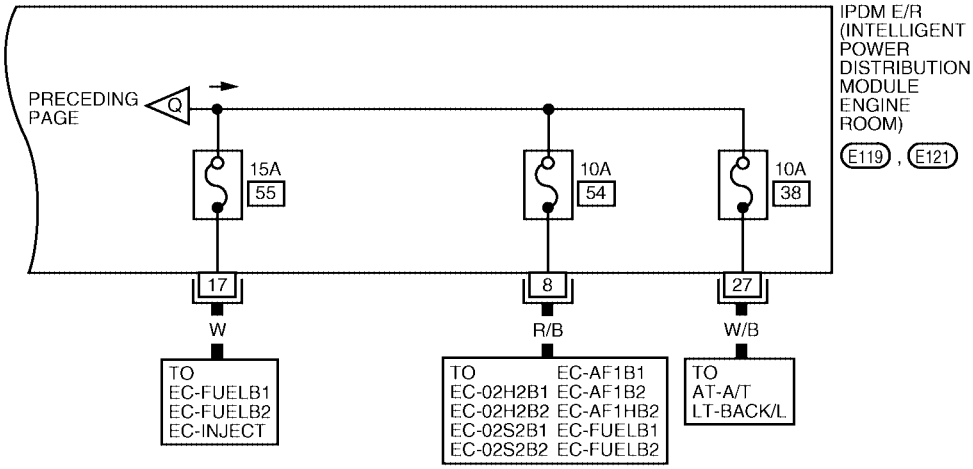
IPDM E/R
(INTELLIGENT
POWER
DISTRIBUTION
MODULE
ENGINE
ROOM)
E119 , E121
PRECEDING
PAGE
Q
15A
55
10A
54
10A
38
17
8
27
W
R/B
W/B
TO
EC-FUELB1
EC-FUELB2
EC-INJECT
TO
EC-02H2B1
EC-02H2B2
EC-02S2B1
EC-02S2B2
EC-AF1B1
EC-AF1B2
EC-AF1HB2
EC-FUELB1
EC-FUELB2
TO
AT-A/T
LT-BACK/L

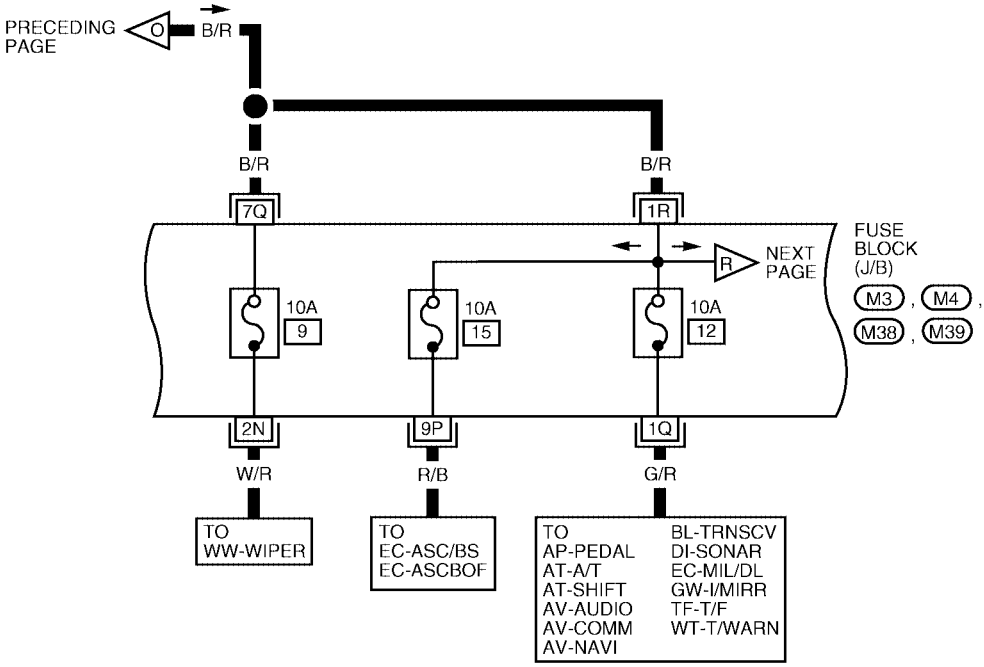
PRECEDING
PAGE
O
B/R
B/R
B/R
7Q
1R
R
NEXT
PAGE
FUSE
BLOCK
(J/B)
M3 , M4 ,
M38 , M39
10A
9
10A
15
10A
12
2N
9P
1Q
W/R
R/B
G/R
TO
WW-WIPER
TO
EC-ASC/BS
EC-ASCBOF
TO
AP-PEDAL
AT-A/T
AT-SHIFT
AV-AUDIO
AV-COMM
AV-NAVI
BL-TRNSCV
DI-SONAR
EC-MIL/DL
GW-I/MIRR
TF-T/F
WT-T/WARN

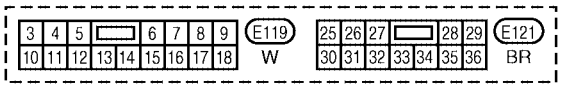
3 4 5 6 7 8 9
10 11 12 13 14 15 16 17 18
E119
W
25 26 27 28 29
30 31 32 33 34 35 36
E121
BR

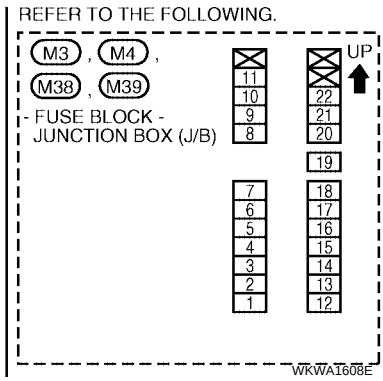
REFER TO THE FOLLOWING.
M3 , M4 ,
M38 , M39
- FUSE BLOCK -
JUNCTION BOX (J/B)
UP
11
10
9
8
22
21
20
19
7
6
5
4
3
2
1
18
17
16
15
14
13
12
WKWA1608E

PG-POWER-10

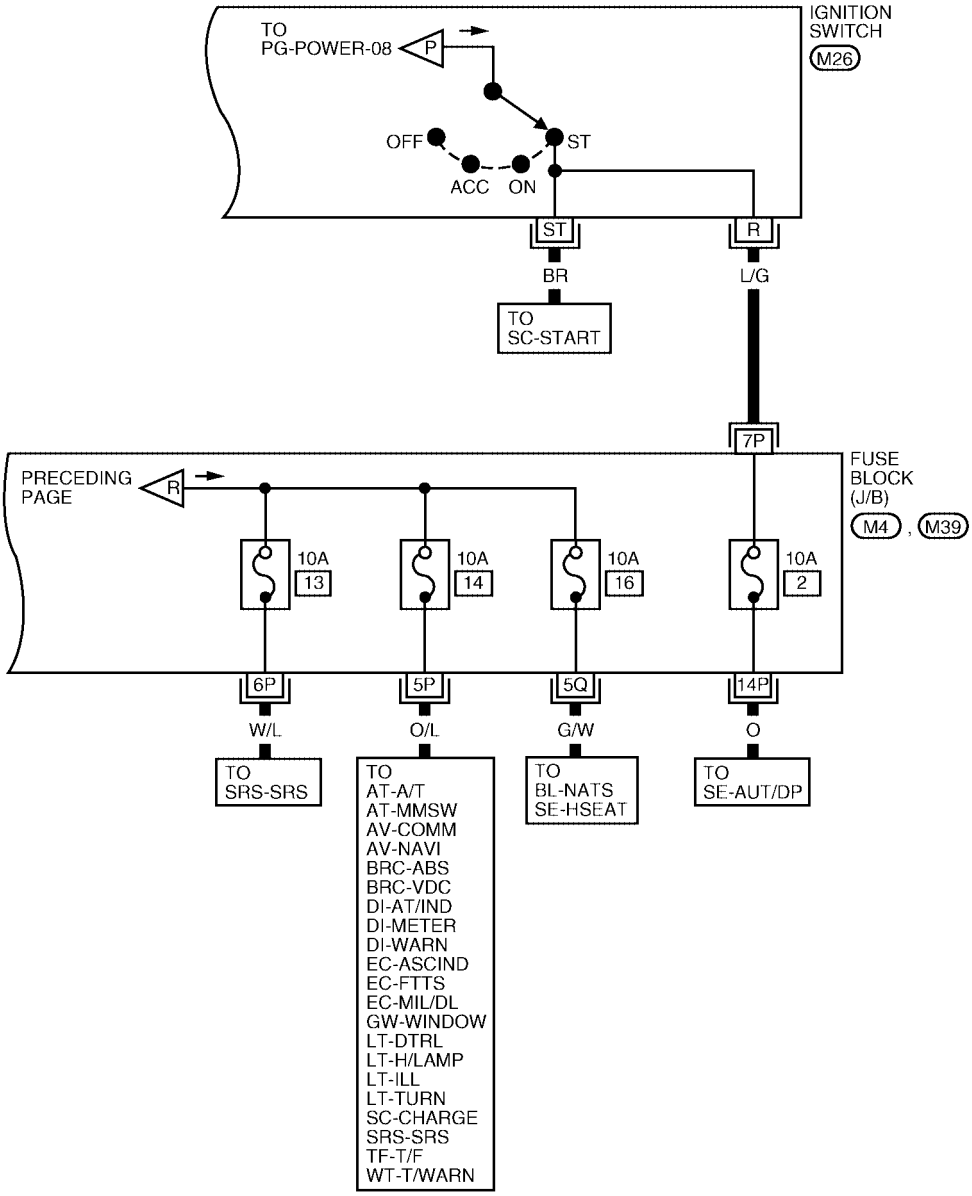
TO
PG-POWER-08
P
IGNITION
SWITCH
M26
OFF
ST
ACC
ON
ST
R
BR
L/G
TO
SC-START
7P
PRECEDING
PAGE
R
FUSE
BLOCK
(J/B)
M4
M39
10A
13
10A
14
10A
16
10A
2
6P
5P
5Q
14P
W/L
O/L
G/W
O
TO
SRS-SRS
TO
AT-A/T
AT-MMSW
AV-COMM
AV-NAVI
BRC-ABS
BRC-VDC
DI-AT/IND
DI-METER
DI-WARN
EC-ASCIND
EC-FTTS
EC-MIL/DL
GW-WINDOW
LT-DTRL
LT-H/LAMP
LT-ILL
LT-TURN
SC-CHARGE
SRS-SRS
TF-T/F
WT-T/WARN
TO
BL-NATS
SE-HSEAT
TO
SE-AUT/DP

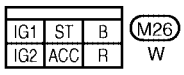
IG1
ST
B
IG2
ACC
R
M26
W

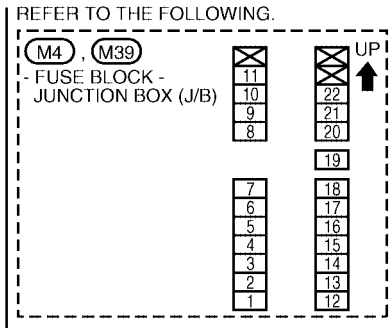
REFER TO THE FOLLOWING.
M4
M39
- FUSE BLOCK -
JUNCTION BOX (J/B)
UP
11
10
9
8
7
6
5
4
3
2
1
22
21
20
19
18
17
16
15
14
13
12
WKWA1609E

IPDM E/R (INTELLIGENT POWER DISTRIBUTION MODULE ENGINE ROOM)

PFP:284B7

System Description

EKS007QE

- IPDM E/R (Intelligent Power Distribution Module Engine Room) integrates the relay box and fuse block which were originally placed in engine compartment. It controls integrated relays via IPDM E/R control circuits.
- IPDM E/R-integrated control circuits perform ON-OFF operation of relays, CAN communication control, etc.
- It controls operation of each electrical component via ECM, BCM and CAN communication lines.

CAUTION:

None of the IPDM E/R integrated relays can be removed.

SYSTEMS CONTROLLED BY IPDM E/R

1. Lamp control
   Using CAN communication lines, it receives signals from the BCM and controls the following lamps:
   - Headlamps (Hi, Lo)
   - Parking lamps
   - Tail lamps and license lamps
   - Front fog lamps
2. Wiper control
   Using CAN communication lines, it receives signals from the BCM and controls the front wipers.
3. Heated mirror relay control
   Using CAN communication lines, it receives signals from the BCM and controls the heated mirror relay.
4. A/C compressor control
   Using CAN communication lines, it receives signals from the ECM and controls the A/C compressor (magnetic clutch).
5. Starter control
   Using CAN communication lines, it receives signals from the ECM and controls the starter relay.
6. Cooling fan control
   Using CAN communication lines, it receives signals from the ECM and controls the cooling fan relays.
7. Horn control
   Using CAN communication lines, it receives signals from the BCM and controls the horn relay.

CAN COMMUNICATION LINE CONTROL

With CAN communication, by connecting each control unit using two communication lines (CAN L-line, CAN H-line), it is possible to transmit a maximum amount of information with minimum wiring. Each control unit can transmit and receive data, and reads necessary information only.

1. Fail-safe control
   - When CAN communication with other control units is impossible, IPDM E/R performs fail-safe control. After CAN communication returns to normal operation, it also returns to normal control.
   - Operation of control parts by IPDM E/R during fail-safe mode is as follows:

Controlled system	Fail-safe mode
Headlamp	● With the ignition switch ON, the headlamp (low) is ON. ● With the ignition switch OFF, the headlamp (low) is OFF.
Tail and parking lamps	● With the ignition switch ON, the tail and parking lamps are ON. ● With the ignition switch OFF, the tail and parking lamps are OFF.
Cooling fan	● With the ignition switch ON, the cooling fan HI operates. ● With the ignition switch OFF, the cooling fan stops.
Front wiper	Until the ignition switch is turned off, the front wiper LO and HI remains in the same status it was in just before fail–safe control was initiated.
Heated mirrors	Heated mirror relay OFF
A/C compressor	A/C compressor OFF
Front fog lamps	Front fog lamp relay OFF

IPDM E/R STATUS CONTROL

In order to save power, IPDM E/R switches status by itself based on each operating condition.

1. CAN communication status
   - CAN communication is normally performed with other control units.
   - Individual unit control by IPDM E/R is normally performed.
   - When sleep request signal is received from BCM, mode is switched to sleep waiting status.
2. Sleep waiting status
   - Process to stop CAN communication is activated.
   - All systems controlled by IPDM E/R are stopped. When 1 second has elapsed after CAN communication with other control units is stopped, mode switches to sleep status.
3. Sleep status
   - IPDM E/R operates in low current-consumption mode.
   - CAN communication is stopped.
   - When a change in CAN communication signal is detected, mode switches to CAN communication status.
   - When a change in ignition switch signal is detected, mode switches to CAN communication status.

CAN Communication System Description

EKS007QF

Refer to LAN-8, "CAN COMMUNICATION" .

Function of Detecting Ignition Relay Malfunction

EKS007QG

- When the integrated ignition relay is stuck in a "closed contact" position and cannot be turned OFF, IPDM E/R turns ON tail and parking lamps for 10 minutes to indicate IPDM E/R malfunction.
- When the state of the integrated ignition relay does not agree with the state of the ignition switch signal received via CAN communication, the IPDM E/R activates the tail lamp relay.

Ignition switch signal	Ignition relay status	Tail lamp relay
ON	ON	—
OFF	OFF	—
ON	OFF	—
OFF	ON	ON (10 minutes)

NOTE:
When the ignition switch is turned ON, the tail lamps are OFF.

CONSULT-II Function

EKS007QH

- CONSULT-II can display each diagnostic item using the diagnostic test modes shown following.

Inspection Item, Diagnosis Mode	Description
SELF-DIAG RESULTS	The IPDM E/R performs diagnosis of CAN communication and self-diagnosis.
DATA MONITOR	The input/output data of the IPDM E/R is displayed in real time.
ACTIVE TEST	The IPDM E/R sends a drive signal to electronic components to check their operation.
CAN DIAG SUPPORT MNTR	The result of transmit/receive diagnosis of CAN communication can be read.

CONSULT-II BASIC OPERATION

CAUTION:

If CONSULT-II is used with no connection of CONSULT-II CONVERTER, malfunctions might be detected in self-diagnosis depending on control unit which carry out CAN communication.

1. With the ignition switch OFF, connect CONSULT-II and CONSULT-II CONVERTER to the data link connector, then turn ignition switch ON.

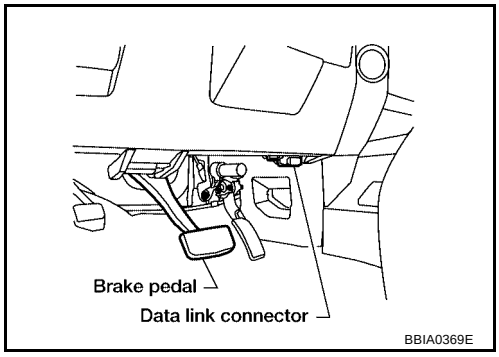

2. Touch “START (NISSAN BASED VHCL)”.

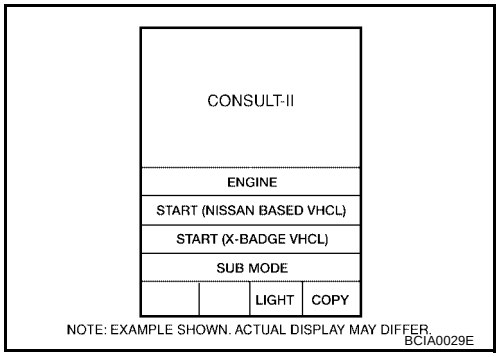

3. Touch “IPDM E/R” on “SELECT SYSTEM” screen.
   - If “IPDM E/R” is not displayed, print "SELECT SYSTEM" screen, then refer to LAN-6, "PRECAUTIONS" .

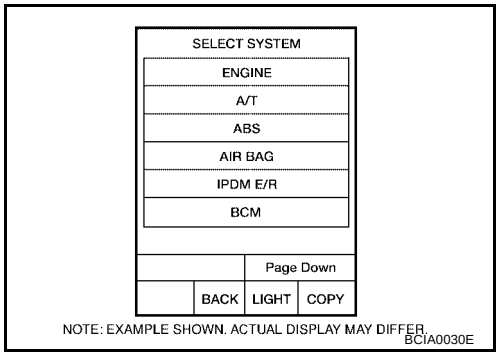

4. Select “SELF-DIAG RESULTS” or “DATA MONITOR”.

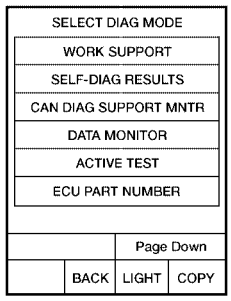

NOTE: EXAMPLE SHOWN. ACTUAL DISPLAY MAY DIFFER.
BCIA0031E

SELF-DIAGNOSTIC RESULTS

Operation Procedure

1. Touch “SELF-DIAG RESULTS” on “SELECT DIAG MODE” screen.
2. Self-diagnosis results are displayed.

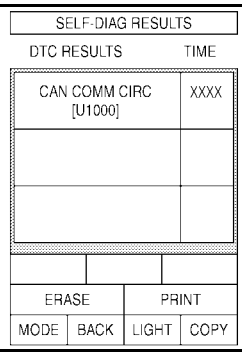

WKIA1264E

Display Item List

Display items	CONSULT-II display code	Malfunction detection	TIME		Possible causes
			CRNT	PAST	
NO DTC IS DETECTED. FURTHER TESTING MAY BE REQUIRED.	—	—	—	—	—
CAN COMM CIRC	U1000	● If CAN communication reception/transmission data has a malfunction, or if any of the control units fail, data reception/transmission cannot be confirmed. ● When the data in CAN communication is not received before the specified time.	X	X	Any of items listed below have errors: ● TRANSMIT DIAG ● ECM ● BCM/SEC

NOTE:
The details for display of the period are as follows:

- CRNT: Error currently detected with IPDM E/R.
- PAST: Error detected in the past and placed in IPDM E/R memory.

DATA MONITOR

Operation Procedure

1. Touch “DATA MONITOR” on “SELECT DIAG MODE” screen.
2. Touch "ALL SIGNALS”, “MAIN SIGNALS” or “SELECT FROM MENU” on the “DATA MONITOR” screen.

ALL SIGNALS	All signals will be monitored.
MAIN SIGNALS	Monitors the predetermined item(s).
SELECT FROM MENU	Selects and monitors individual signal(s).

3. Touch “START”.
4. Touch the required monitoring item on "SELECT ITEM MENU".

5. Touch “RECORD” while monitoring to record the status of the item being monitored. To stop recording, touch “STOP”.

All Signals, Main Signals, Select From Menu

Item name	CONSULT-II screen display	Display or unit	Monitor item selection			Description
			ALL SIGNALS	MAIN SIGNALS	SELECT FROM MENU	
Motor fan request	MOTOR FAN REQ	1/2/3/4	X	X	X	Signal status input from ECM
Compressor request	AC COMP REQ	ON/OFF	X	X	X	Signal status input from ECM
Tail & clear request	TAIL & CLR REQ	ON/OFF	X	X	X	Signal status input from BCM
H/L LO request	HL LO REQ	ON/OFF	X	X	X	Signal status input from BCM
H/L HI request	HL HI REQ	ON/OFF	X	X	X	Signal status input from BCM
FR fog request	FR FOG REQ	ON/OFF	X	X	X	Signal status input from BCM
FR wiper request	FR WIP REQ	STOP/1LOW/ LOW/HI	X	X	X	Signal status input from BCM
Wiper auto stop	WIP AUTO STOP	ACT P/STOP P	X	X	X	Output status of IPDM E/R
Wiper protection	WIP PROT	OFF/Block	X	X	X	Control status of IPDM E/R
Starter request	ST RLY REQ	ON/OFF	X		X	Status of input signal NOTE
Ignition relay status	IGN RLY	ON/OFF	X	X	X	Ignition relay status monitored with IPDM E/R
Rear defogger request (heated mirror)	RR DEF REQ	ON/OFF	X	X	X	Signal status input from BCM
Oil pressure switch	OIL P SW	OPEN/CLOSE	X		X	Signal status input from IPDM E/R
Hood switch	HOOD SW	OFF	X			Signal status input from IPDM E/R (function is not enabled)
Theft warning horn request	THFT HRN REQ	ON/OFF	X		X	Signal status input from BCM
Horn chirp	HORN CHIRP	ON/OFF	X		X	Output status of IPDM E/R
Daytime running lamp request	DTRL REQ	ON/OFF	X		X	Signal status input from BCM

NOTE:
Perform monitoring of IPDM E/R data with the ignition switch ON. When the ignition switch is in ACC position, display may not be correct.

ACTIVE TEST

Operation Procedure

1. Touch “ACTIVE TEST” on “SELECT DIAG-MODE” screen.
2. Touch item to be tested, and check operation.
3. Touch “START”.
4. Touch "STOP" while testing to stop the operation.

Test name	CONSULT-II screen display	Description
Heated mirror	REAR DEFOGGER	With a certain ON-OFF operation, the heated mirror relay can be operated.
Front wiper (HI, LO) output	FRONT WIPER	With a certain operation (OFF, HI ON, LO ON), the front wiper relay (Lo, Hi) can be operated.
Cooling fan output	MOTOR FAN	With a certain operation (1, 2, 3, 4), the cooling fan can be operated.
Lamp (HI, LO, TAIL, FOG) output	EXTERNAL LAMPS	With a certain operation (OFF, HI ON, LO ON, TAIL ON, FOG ON), the lamp relay (Low, High, Tail, Fog) can be operated.

Test name	CONSULT-II screen display	Description
Cornering lamp output	CORNERING LAMP	—
Horn output	HORN	With a certain ON-OFF operation, the horn relay can be operated.

Auto Active Test

EKS007QI

DESCRIPTION

- In auto active test mode, operation inspection can be performed when IPDM E/R sends a drive signal to the following systems:
  - Front wipers
  - Tail, parking, and license lamps
  - Front fog lamps
  - Headlamps (Hi, Lo) (Daytime light system if equipped)
  - A/C compressor (magnetic clutch)
  - Cooling fan

OPERATION PROCEDURE

1. Close hood and front door RH, and lift wiper arms away from windshield (to prevent glass damage by wiper operation).

   NOTE:
   When auto active test is performed with hood opened, sprinkle water on windshield beforehand.
2. Turn ignition switch OFF.
3. Turn ignition switch ON and, within 20 seconds, press front door switch LH 10 times. Then turn ignition switch OFF.
4. Turn ignition switch ON within 10 seconds after ignition switch OFF.
5. When auto active test mode is actuated, horn chirps once.
6. After a series of operations is repeated three times, auto active test is completed.

   NOTE:
   When auto active test mode has to be cancelled halfway, turn ignition switch OFF.

   CAUTION:
   Be sure to perform BL-35, "Door Switch Check (King Cab)" or BL-37, "Door Switch Check (Crew Cab)" when the auto active test cannot be performed.

INSPECTION IN AUTO ACTIVE TEST MODE

- When auto active test mode is actuated, the following six steps are repeated three times.

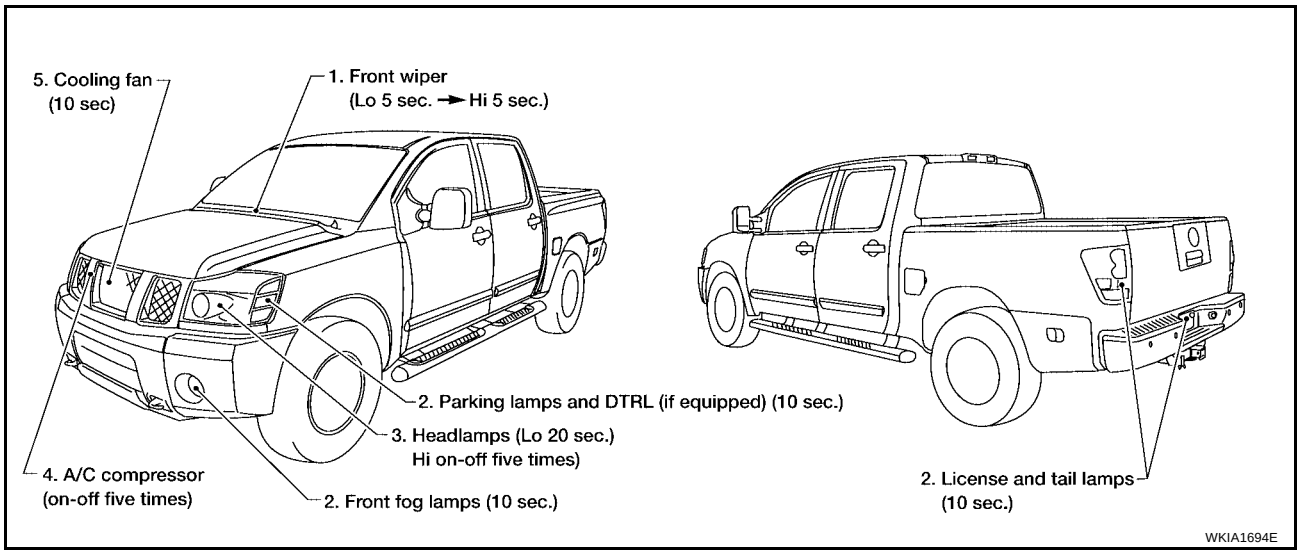

Concept of Auto Active Test

- IPDM E/R actuates auto active test mode when it receives door switch signal from BCM via CAN communication line. Therefore, when auto active test mode is activated successfully, CAN communication between IPDM E/R and BCM is normal.
- If any of the systems controlled by IPDM E/R cannot be operated, possible cause can be easily diagnosed using auto active test.

Diagnosis chart in auto active test mode

Symptom	Inspection contents		Possible cause
Any of front wipers, tail and parking lamps, front fog lamps, and head-lamps (Hi, Lo) do not operate.	Perform auto active test. Does system in question operate?	YES	● BCM signal input system
		NO	● Lamp/wiper motor malfunction ● Lamp/wiper motor ground circuit malfunction ● Harness/connector malfunction between IPDM E/R and system in question ● IPDM E/R (integrated relay) malfunction
A/C compressor does not operate.	Perform auto active test. Does magnetic clutch operate?	YES	● BCM signal input circuit ● CAN communication signal between BCM and ECM ● CAN communication signal between ECM and IPDM E/R
		NO	● Magnetic clutch malfunction ● Harness/connector malfunction between IPDM E/R and magnetic clutch ● IPDM E/R (integrated relay) malfunction
Cooling fan does not operate.	Perform auto active test. Does cooling fan operate?	YES	● ECM signal input circuit ● CAN communication signal between ECM and IPDM E/R
		NO	● Cooling fan motor malfunction ● Harness/connector malfunction between IPDM E/R and cooling fan motor ● IPDM E/R (integrated relay) malfunction
Oil pressure warning lamp does not operate.	Perform auto active test. Does oil pressure warning lamp blink?	YES	● Harness/connector malfunction between IPDM E/R and oil pressure switch ● Oil pressure switch malfunction ● IPDM E/R
		NO	● CAN communication signal between BCM and combination meter ● Combination meter

Schematic

EKS007QJ

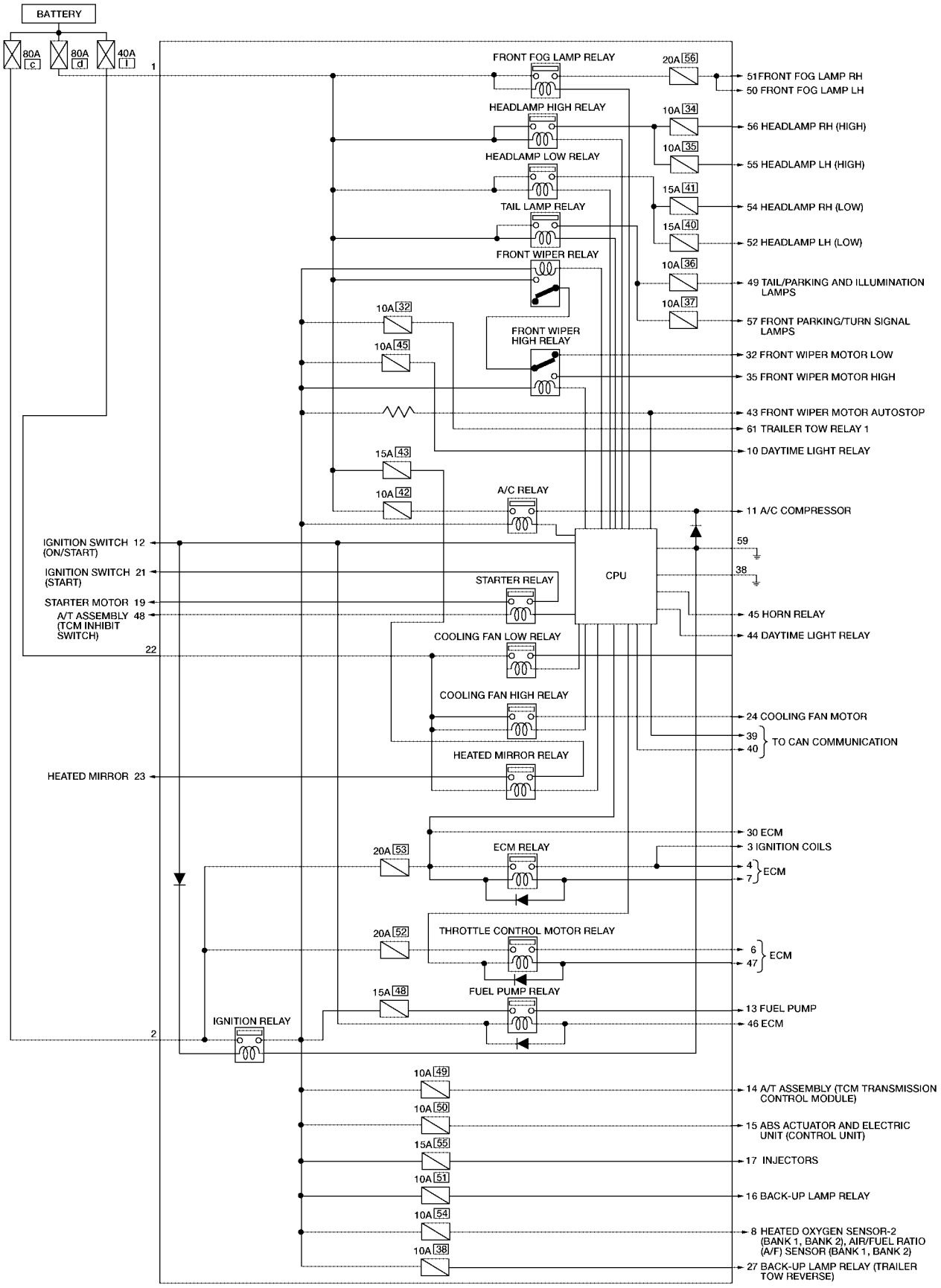

IPDM E/R Terminal Arrangement

EKS007QK

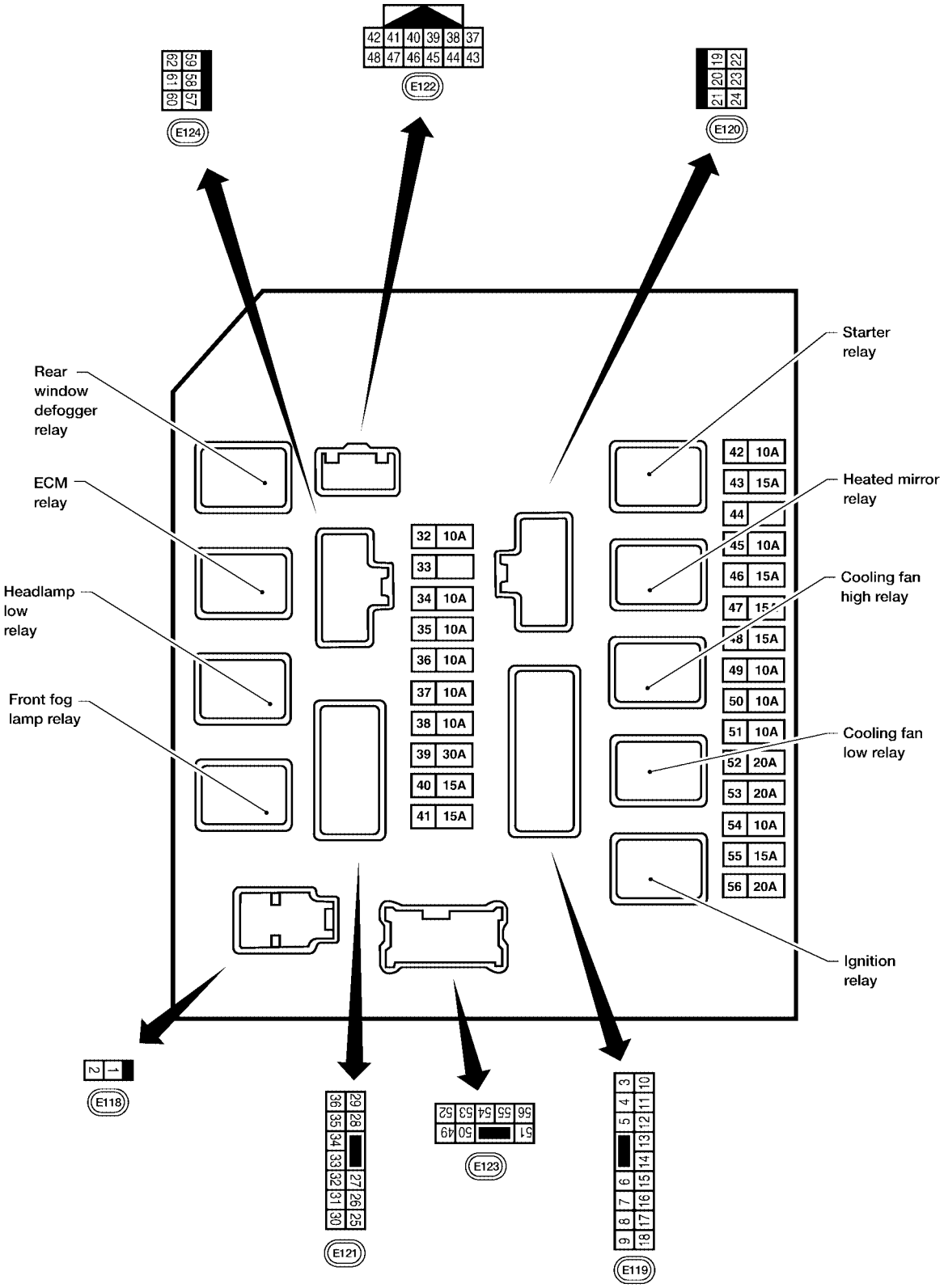

WKIA1695E

IPDM E/R Power/Ground Circuit Inspection

EKS007QL

1. FUSE AND FUSIBLE LINK INSPECTION

- Check that the following fusible links or IPDM E/R fuses are not blown.

Terminal No.	Signal name	Fuse, fusible link No.
1, 2, 22	Battery power	a, c, d, e, l

OK or NG

OK >> GO TO 2.
NG >> Replace fuse or fusible link.

2. POWER CIRCUIT INSPECTION

1. Disconnect IPDM E/R harness connector E118.
2. Check voltage between IPDM E/R harness connector E118 terminals 1 (B/Y), 2 (R) and ground.

Battery voltage should exist.

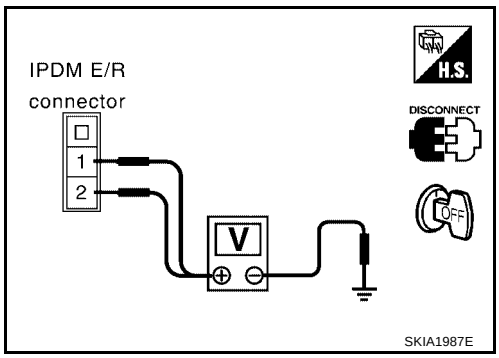

OK or NG

OK >> GO TO 3.
NG >> Repair or replace IPDM E/R power circuit harness.

3. GROUND CIRCUIT INSPECTION

1. Disconnect IPDM E/R harness connectors E122 and E124.
2. Check continuity between IPDM E/R harness connector E122 terminal 38 (B), and E124 terminal 59 (B) and ground.

Continuity should exist.

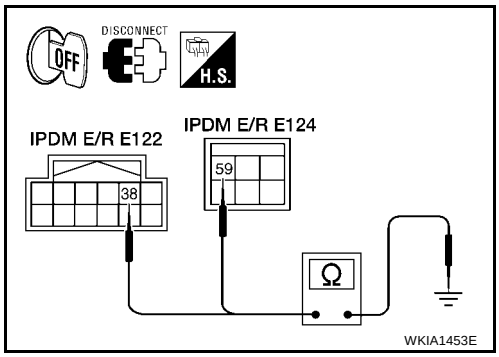

OK or NG

OK >> Inspection End.
NG >> Repair or replace ground circuit harness of IPDM E/R.

Inspection with CONSULT-II (Self-Diagnosis)

EKS007QM

CAUTION:

If a CONSULT-II is used with no connection of CONSULT-II CONVERTER, malfunctions might be detected in self-diagnosis depending on which control unit(s) carry out CAN communication.

1. SELF-DIAGNOSIS RESULT CHECK

1. Connect CONSULT-II and select "IPDM E/R" on the Diagnosis System Selection screen.
2. Select "SELF-DIAG RESULTS" on the diagnosis mode selection screen.
3. Check display content in self-diagnosis results.

CONSULT-II Display	CONSULT-II display code	TIME		Details of diagnosis result
		CRNT	PAST	
NO DTC IS DETECTED. FURTHER TESTING MAY BE REQUIRED.	—	—	—	No malfunction
CAN COMM CIRC	U1000	X	X	Any of items listed below have errors: ● TRANSMIT DIAG ● ECM ● BCM/SEC

NOTE:

The Details for Display for the Period are as follows:

- CRNT: Error currently detected by IPDM E/R.
- PAST: Error detected in the past and stored in IPDM E/R memory.

Contents displayed

NO DTC DETECTED. FURTHER TESTING MAY BE REQUIRED.>>INSPECTION END.
CAN COMM CIRC>>Print out the self-diagnosis result and refer to LAN-8, "CAN COMMUNICATION" .

Removal and Installation of IPDM E/R

EKS007QN

REMOVAL

1. Disconnect negative battery cable.
2. Remove IPDM E/R upper cover.

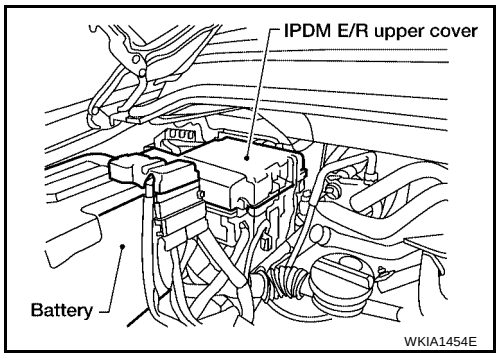

3. Release 2 clips and pull IPDM E/R up from case.
4. Disconnect IPDM E/R connectors and remove the IPDM E/R.

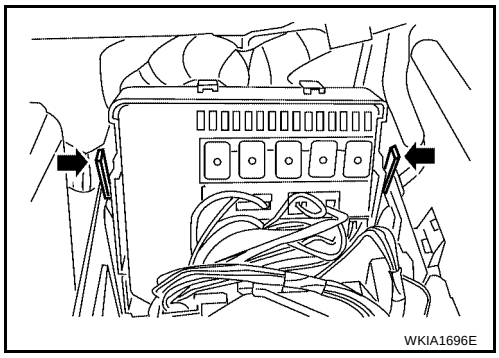

INSTALLATION

Installation is in the reverse order of removal.

GROUND CIRCUIT

PFP:24080

Ground Distribution

EKS007QO

MAIN HARNESS

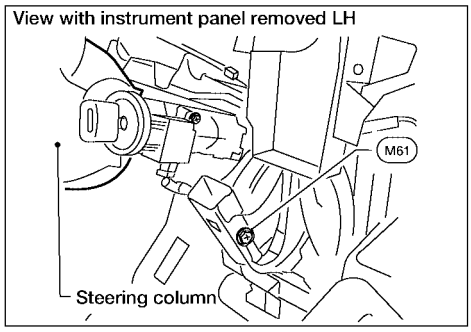

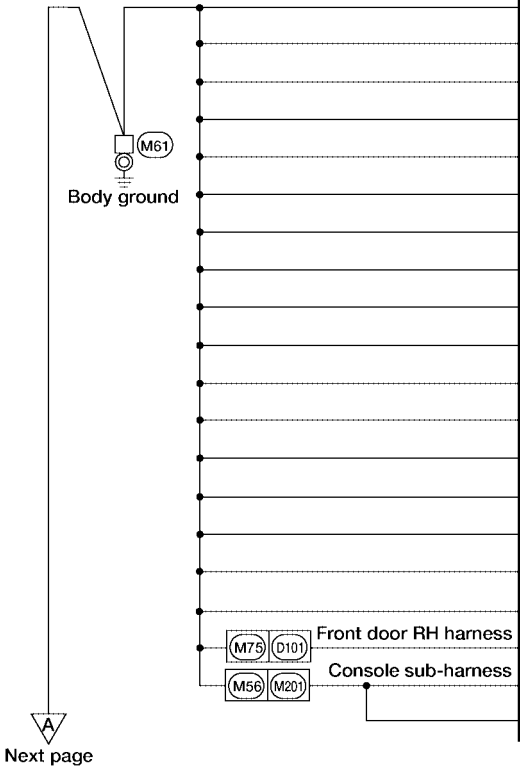

CONNECTOR NUMBER	CONNECT TO
M5	Illumination control switch
M20	BCM (Terminal 67)
M21	NATS antenna amp
M22	Data link connector (Terminal 4)
M22	Data link connector (Terminal 5)
M24	Combination meter (Terminal 17)
M28	Combination switch (Terminal 12)
M35	Air bag diagnosis sensor
M47	Steering angle sensor
M51	Front blower switch
M68	A/T device (column shift)
M97	Heated seat relay
M112	Audio amp (Terminal 4)
M113	Audio amp (Terminal 20)
M122	Variable blower control
M139	Diode-1
M151	Condenser-3
D107	Door mirror RH (door mirror defogger)
M203	A/T device (floor shift) (Terminal 2)
M203	A/T device (floor shift) (Terminal 8)

WKIA2845E

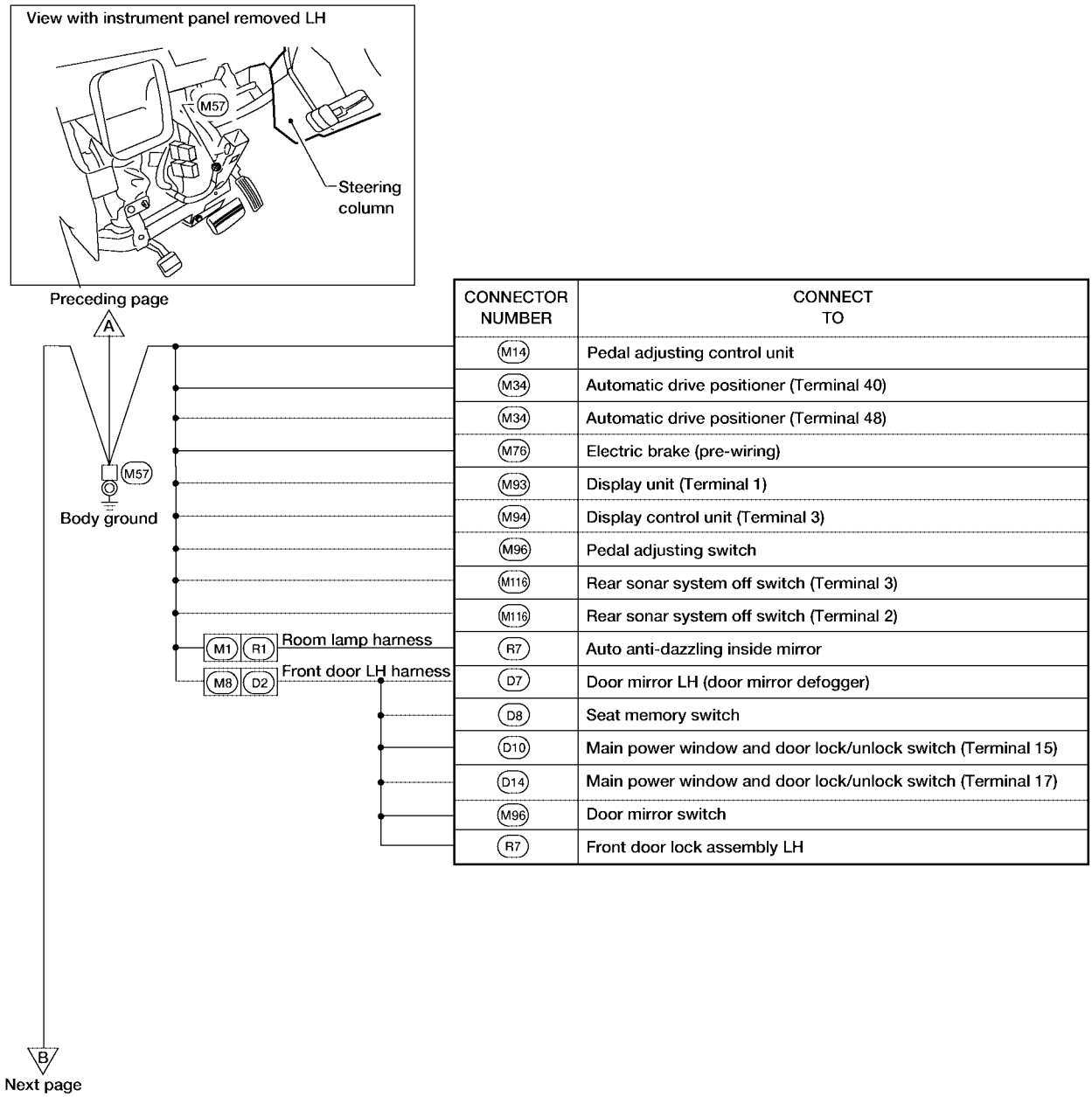

CONNECTOR NUMBER	CONNECT TO
M14	Pedal adjusting control unit
M34	Automatic drive positioner (Terminal 40)
M34	Automatic drive positioner (Terminal 48)
M76	Electric brake (pre-wiring)
M93	Display unit (Terminal 1)
M94	Display control unit (Terminal 3)
M96	Pedal adjusting switch
M116	Rear sonar system off switch (Terminal 3)
M116	Rear sonar system off switch (Terminal 2)
R7	Auto anti-dazzling inside mirror
D7	Door mirror LH (door mirror defogger)
D8	Seat memory switch
D10	Main power window and door lock/unlock switch (Terminal 15)
D14	Main power window and door lock/unlock switch (Terminal 17)
M96	Door mirror switch
R7	Front door lock assembly LH

WKIA2846E

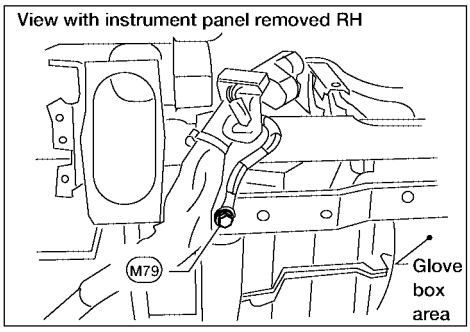

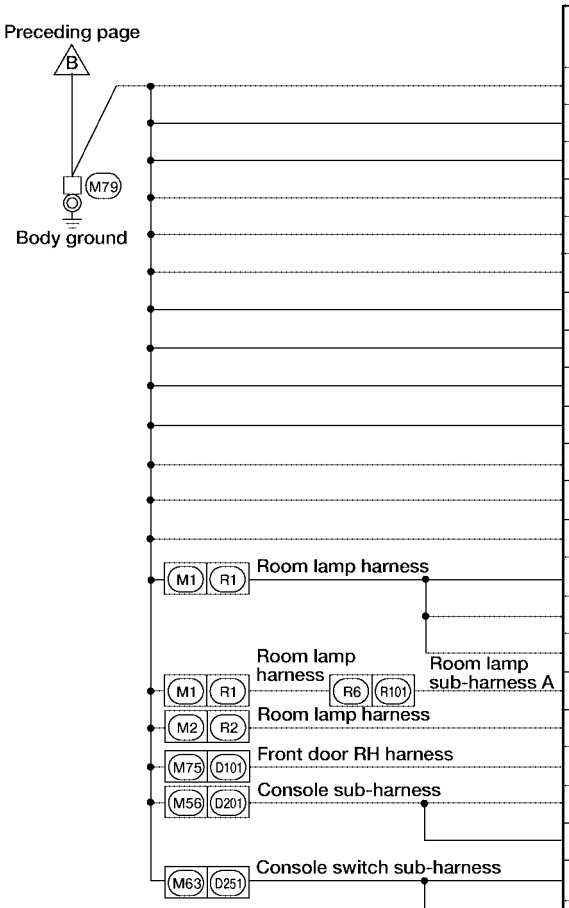

CONNECTOR NUMBER	CONNECT TO
M3	Fuse block J/B
M6	VDC off switch (column shift)
M13	Front passenger air bag off indicator
M49	Front air control (Terminal 1)
M53	Front power socket LH
M54	Front power socket RH (for cigarette lighter)
M55	Hazard switch
M59	Glove box lamp
M67	Tow mode switch (column shift) (Terminal 2)
M67	Tow mode switch (column shift (Terminal 6)
M81	Shift lock control unit
M98	AV switch
M107	Front blower motor relay
R3	Vanity lamp LH
R7	Auto anti-dazzling inside mirror
R8	Vanity lamp RH
R102	Front room/map lamp assembly
R4	Sunroof motor
D105	Power window and door lock/unlock switch RH
M206	DVD player (Terminal 22)
M207	Console power socket
M252	Heated seat switch (passenger)
M253	VDC off switch (floor shift)
M254	Tow mode switch (floor shift) (Terminal 2)
M254	Tow mode switch (floor shift) (Terminal 6)
M255	Front heated seat switch LH

WKIA2847E

ENGINE ROOM HARNESS

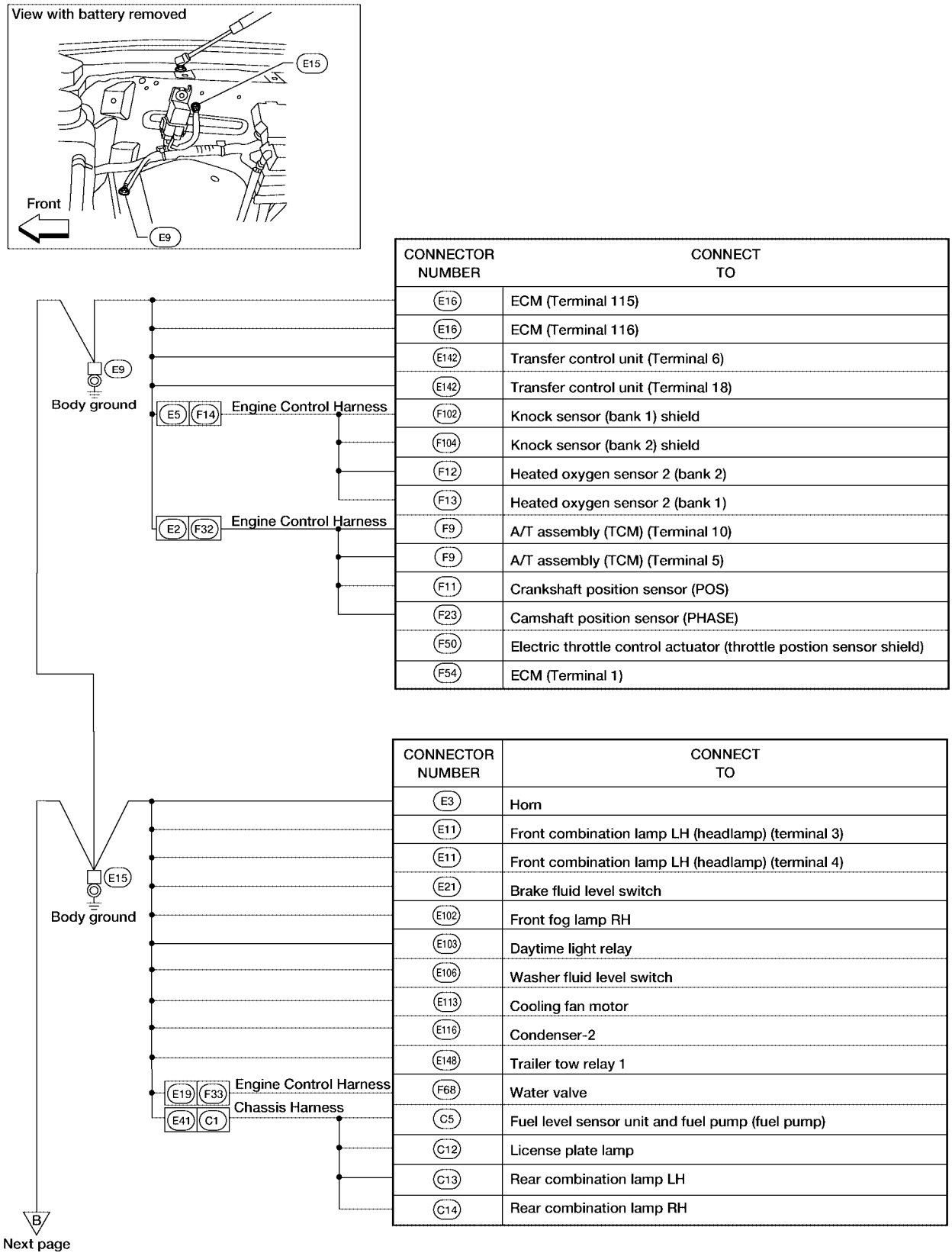

CONNECTOR NUMBER	CONNECT TO
E16	ECM (Terminal 115)
E16	ECM (Terminal 116)
E142	Transfer control unit (Terminal 6)
E142	Transfer control unit (Terminal 18)
F102	Knock sensor (bank 1) shield
F104	Knock sensor (bank 2) shield
F12	Heated oxygen sensor 2 (bank 2)
F13	Heated oxygen sensor 2 (bank 1)
F9	A/T assembly (TCM) (Terminal 10)
F9	A/T assembly (TCM) (Terminal 5)
F11	Crankshaft position sensor (POS)
F23	Camshaft position sensor (PHASE)
F50	Electric throttle control actuator (throttle postion sensor shield)
F54	ECM (Terminal 1)

CONNECTOR NUMBER	CONNECT TO
E3	Horn
E11	Front combination lamp LH (headlamp) (terminal 3)
E11	Front combination lamp LH (headlamp) (terminal 4)
E21	Brake fluid level switch
E102	Front fog lamp RH
E103	Daytime light relay
E106	Washer fluid level switch
E113	Cooling fan motor
E116	Condenser-2
E148	Trailer tow relay 1
F68	Water valve
C5	Fuel level sensor unit and fuel pump (fuel pump)
C12	License plate lamp
C13	Rear combination lamp LH
C14	Rear combination lamp RH

WKIA2848E

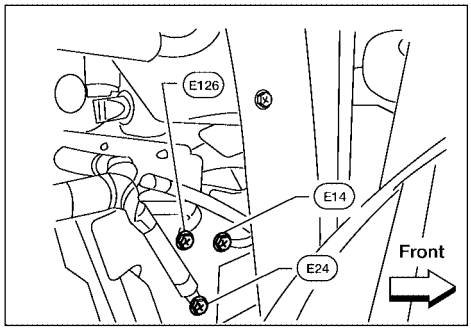

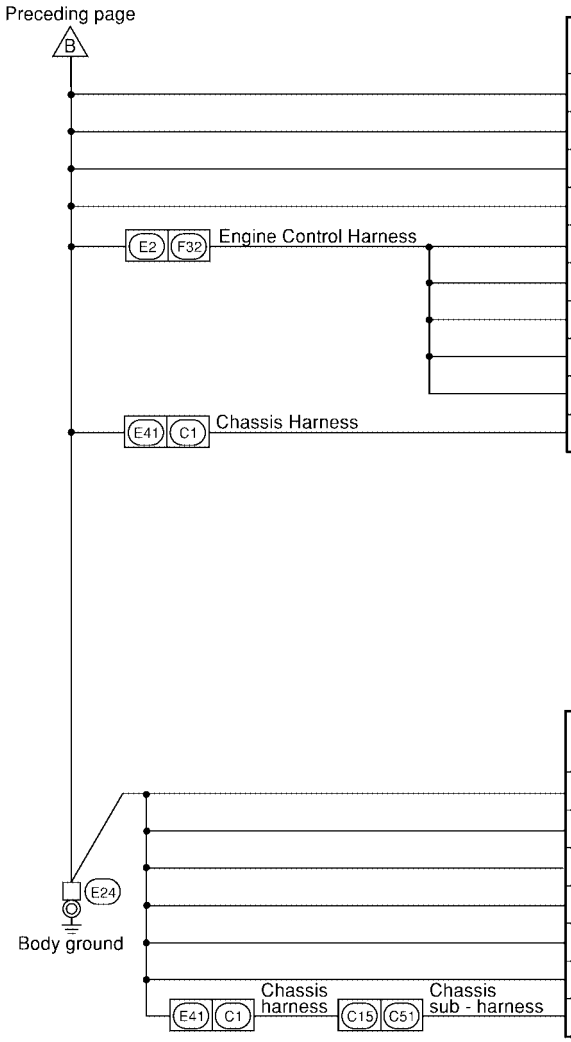

CONNECTOR NUMBER	CONNECT TO
E46	Transfer shift relay 1 (Terminal 1)
E140	Trailer tow relay 2
E143	Transfer control unit (Terminal 32)
E148	Trailer tow relay 1
F55	ATP switch
F57	Transfer motor
F58	Transfer control device (actuator position switch) (Terminal 22)
F59	Wait detection switch
F60	4LO switch
C2	Trailer

CONNECTOR NUMBER	CONNECT TO
E23	Front wiper motor
E101	Front fog lamp LH
E107	Front combination lamp RH (headlamp) (Terminal 3)
E107	Front combination lamp RH (headlamp) (Terminal 4)
E122	IPDM E/R (Terminal 38)
E124	IPDM E/R (Terminal 59)
C52	Rear cargo bed power socket

WKIA2849E

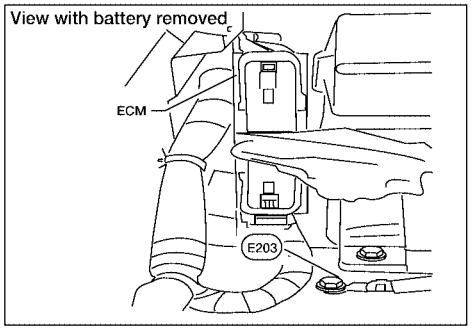

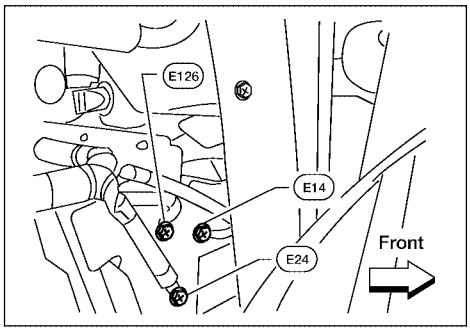

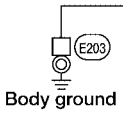

CONNECTOR NUMBER	CONNECT TO
E204	Generator

CONNECTOR NUMBER	CONNECT TO
E125	ABS actuator and electric unit (control unit) (Terminal No. 16)
E125	ABS actuator and electric unit (control unit) (Terminal No. 47)

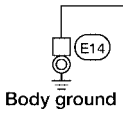

CONNECTOR NUMBER	CONNECT TO
E4	Crash zone sensor (shield wire)

WKIA1459E

ENGINE CONTROL HARNESS

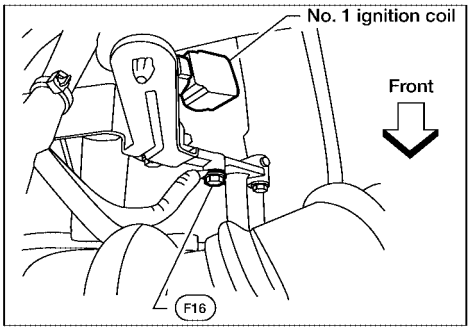

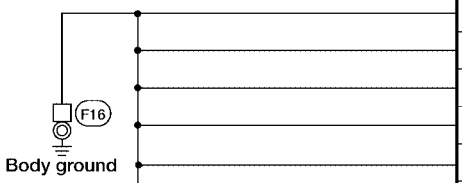

CONNECTOR NUMBER	CONNECT TO
F6	Ignition coil No. 2 (with power transistor)
F7	Ignition coil No. 4 (with power transistor)
F8	Ignition coil No. 6 (with power transistor)
F21	Condenser-1
F47	Ignition coil No. 1 (with power transistor)
F48	Ignition coil No. 3 (with power transistor)
F49	Ignition coil No. 5 (with power transistor)
F51	Ignition coil No. 7 (with power transistor)
F52	Ignition coil No. 8 (with power transistor)

WKIA1460E

BODY HARNESS

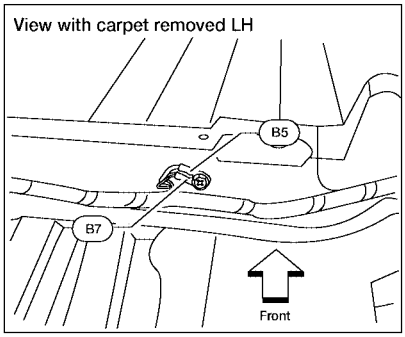

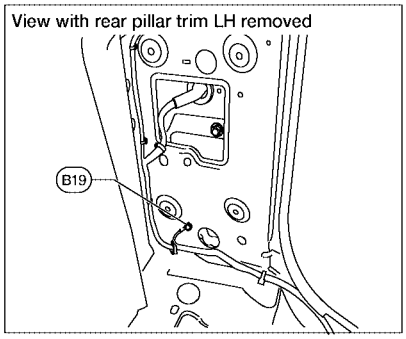

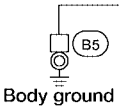

CONNECTOR NUMBER	CONNECT TO
B15	LH side air bag satellite sensor (shield wire)

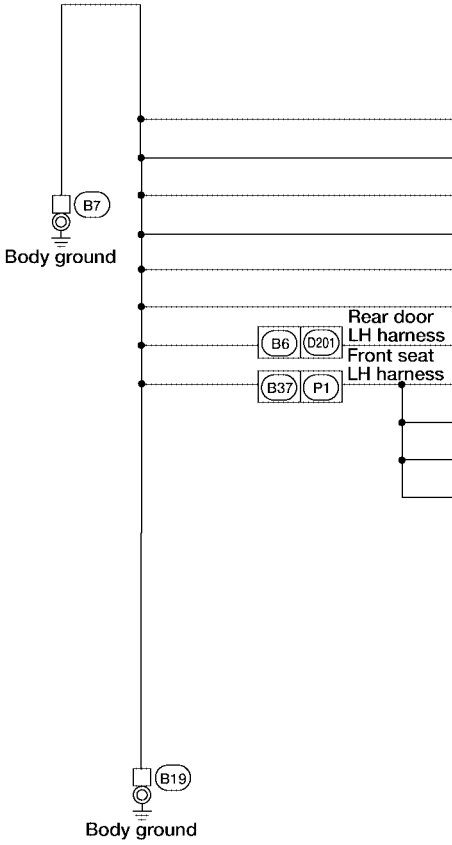

CONNECTOR NUMBER	CONNECT TO
B8	Front door switch LH
B12	Seat belt buckle switch LH
B56	Sonar control unit
B72	Subwoofer (with premium audio)
B73	Rear door switch LH upper (King cab)
B74	Rear door switch LH lower (King cab)
D203	Rear power window switch LH (Crew cab)
P2	Driver seat control unit (signal ground) (Terminal 32)
P3	Driver seat control unit (power ground) (Terminal 48)
P8	Power seat switch LH
P9	Front seat heater LH

WKIA2850E

BODY NO. 2 HARNESS

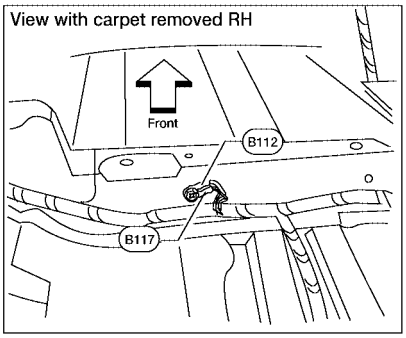

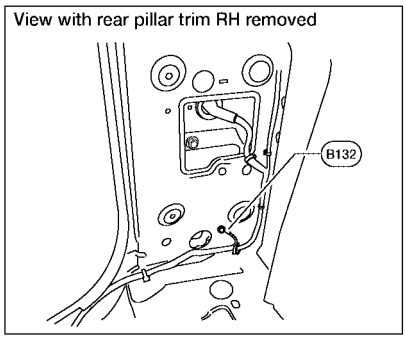

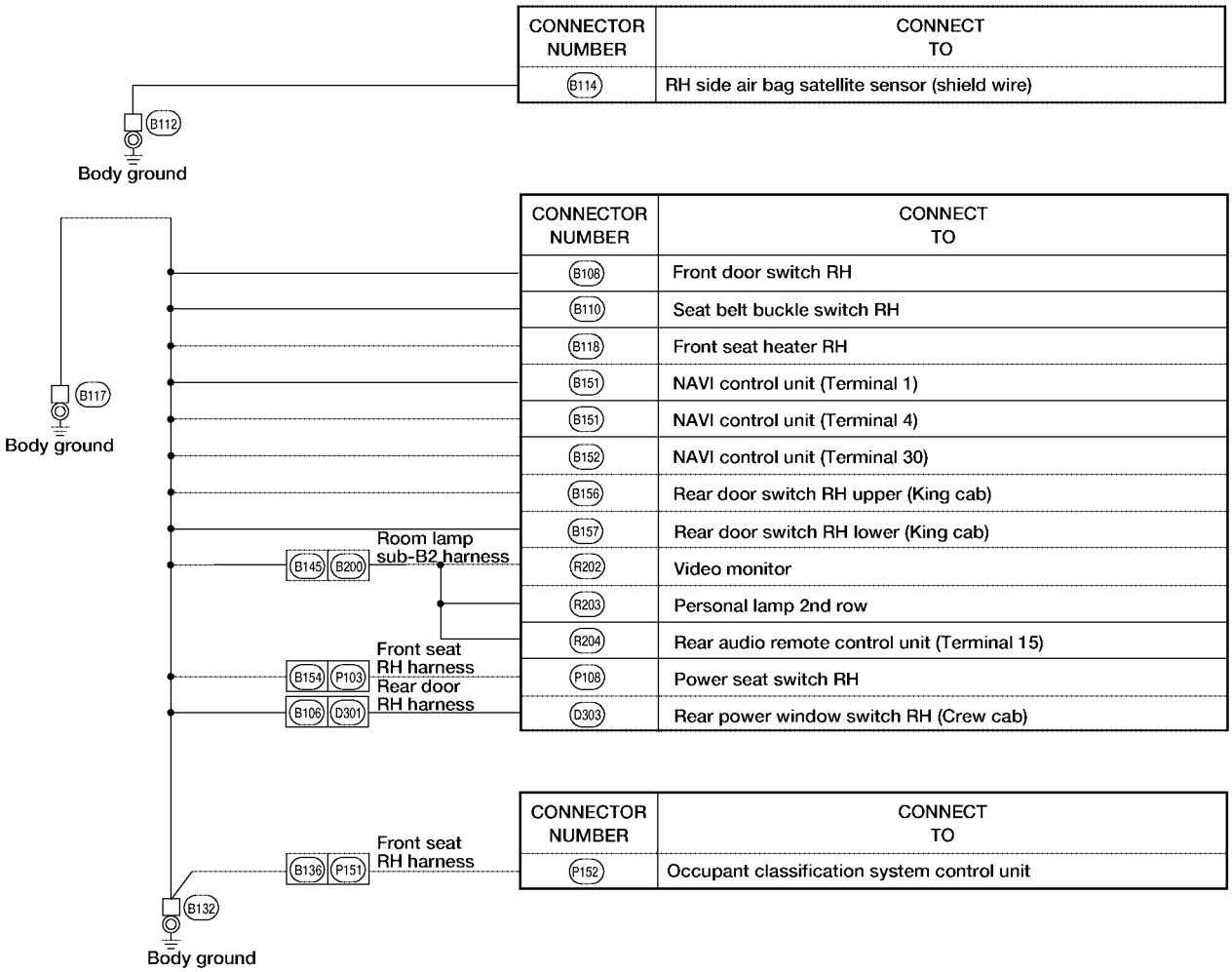

CONNECTOR NUMBER	CONNECT TO
B114	RH side air bag satellite sensor (shield wire)

CONNECTOR NUMBER	CONNECT TO
B108	Front door switch RH
B110	Seat belt buckle switch RH
B118	Front seat heater RH
B151	NAVI control unit (Terminal 1)
B151	NAVI control unit (Terminal 4)
B152	NAVI control unit (Terminal 30)
B156	Rear door switch RH upper (King cab)
B157	Rear door switch RH lower (King cab)
R202	Video monitor
R203	Personal lamp 2nd row
R204	Rear audio remote control unit (Terminal 15)
P108	Power seat switch RH
D303	Rear power window switch RH (Crew cab)

CONNECTOR NUMBER	CONNECT TO
P152	Occupant classification system control unit

WKIA2851E

HARNESS

PFP:24010

Harness Layout

EKS007QP

HOW TO READ HARNESS LAYOUT

The following Harness Layouts use a map style grid to help locate connectors on the drawings:

- Main Harness
- Engine Room Harness LH View (Engine Compartment)
- Engine Room Harness RH View (Engine Compartment)
- Engine Control Harness
- Body Harness and Rear Bumper Sub Harness
- Body No. 2 Harness and Fuel Pump Sub Harness

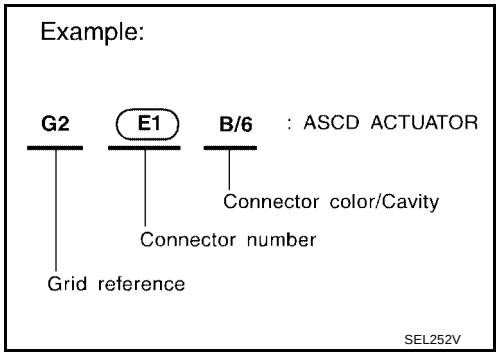

To use the grid reference

1. Find the desired connector number on the connector list.
2. Find the grid reference.
3. On the drawing, find the crossing of the grid reference letter column and number row.
4. Find the connector number in the crossing zone.
5. Follow the line (if used) to the connector.

CONNECTOR SYMBOL

Main symbols of connector (in Harness Layout) are indicated below.

Connector type	Water proof type		Standard type	
	Male	Female	Male	Female
● Cavity: Less than 4 ● Relay connector				
● Cavity: From 5 to 8				
● Cavity: More than 9				
● Ground terminal etc.	—			

OUTLINE (KING CAB MODELS)

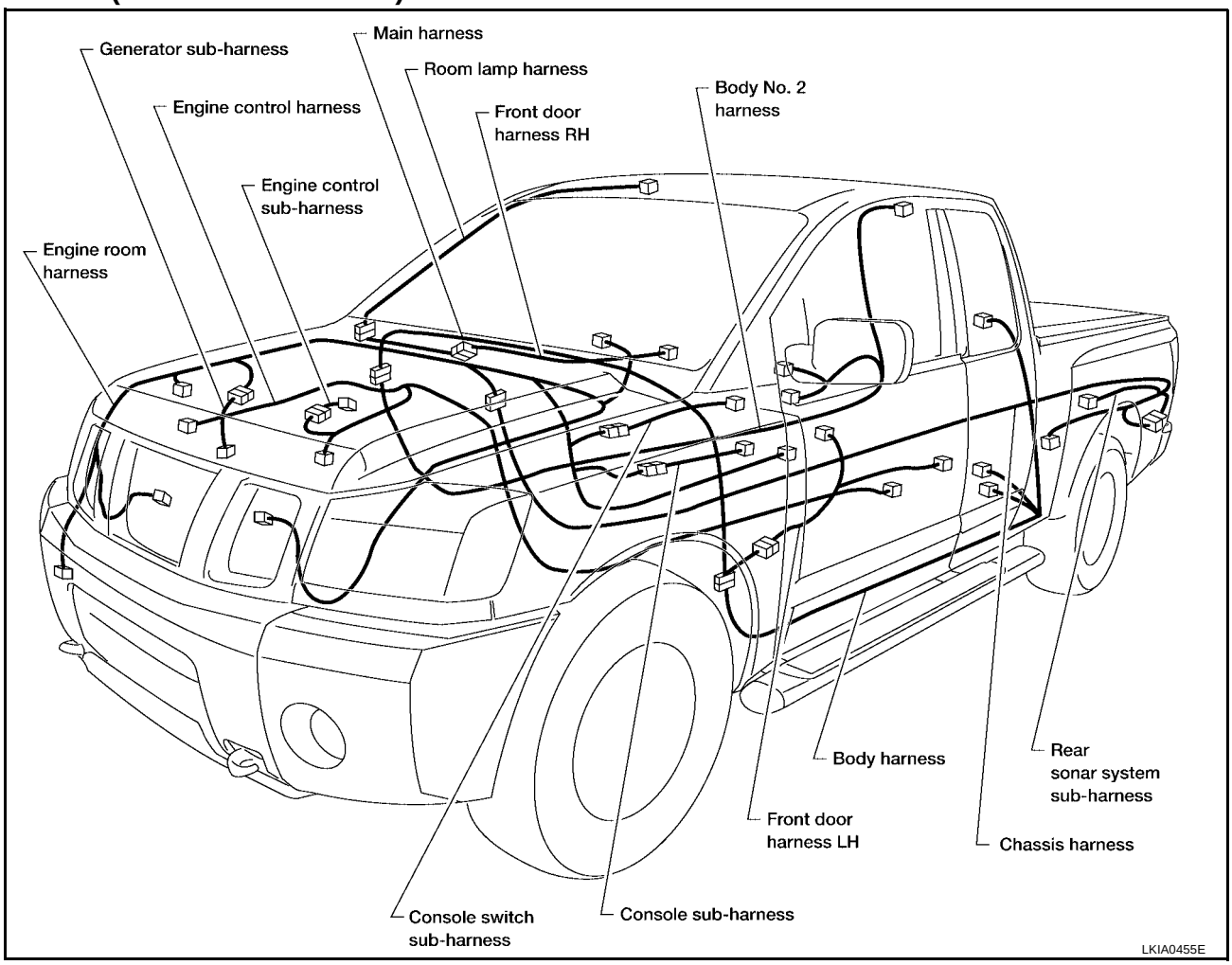

OUTLINE (CREW CAB MODELS)

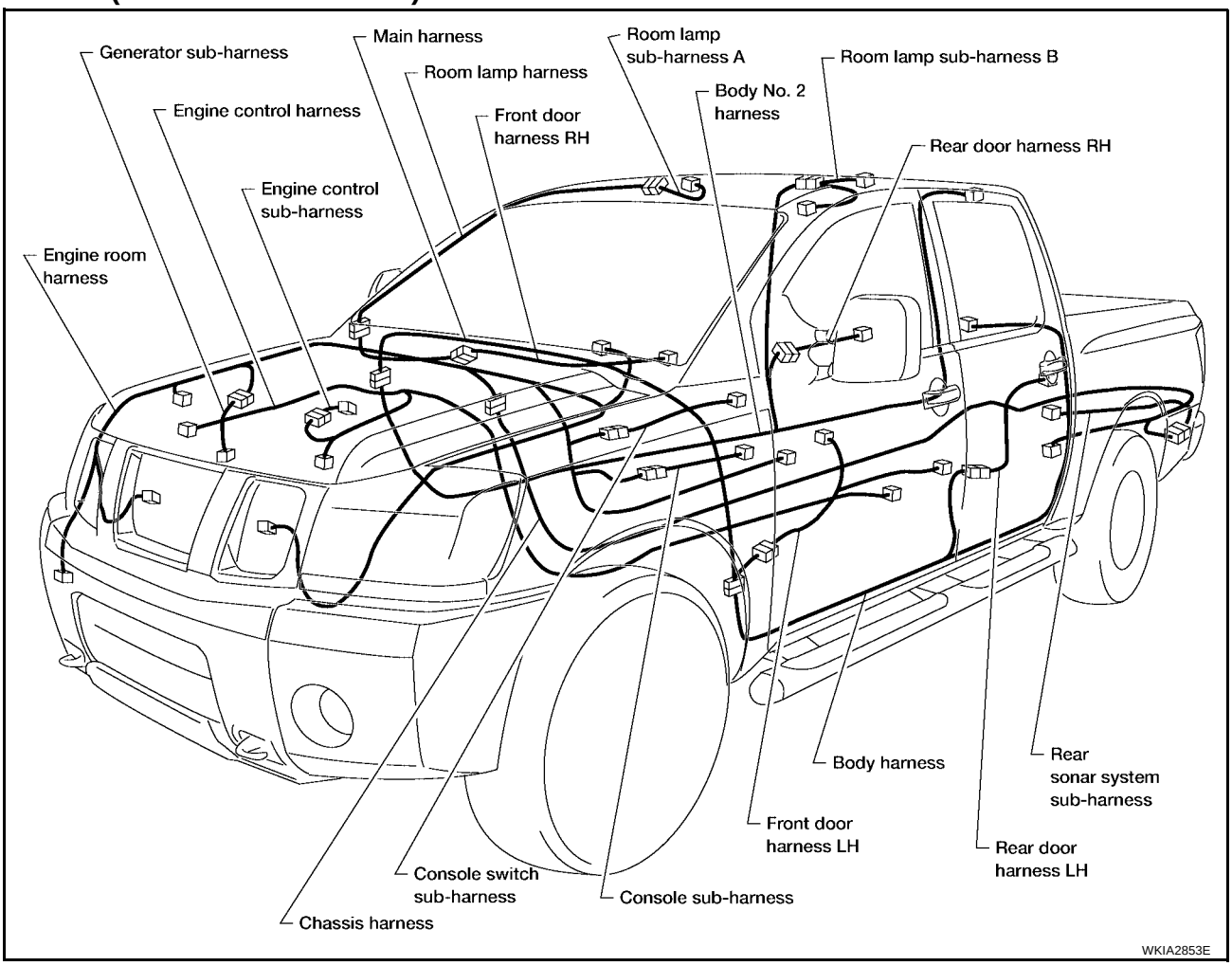

MAIN HARNESS

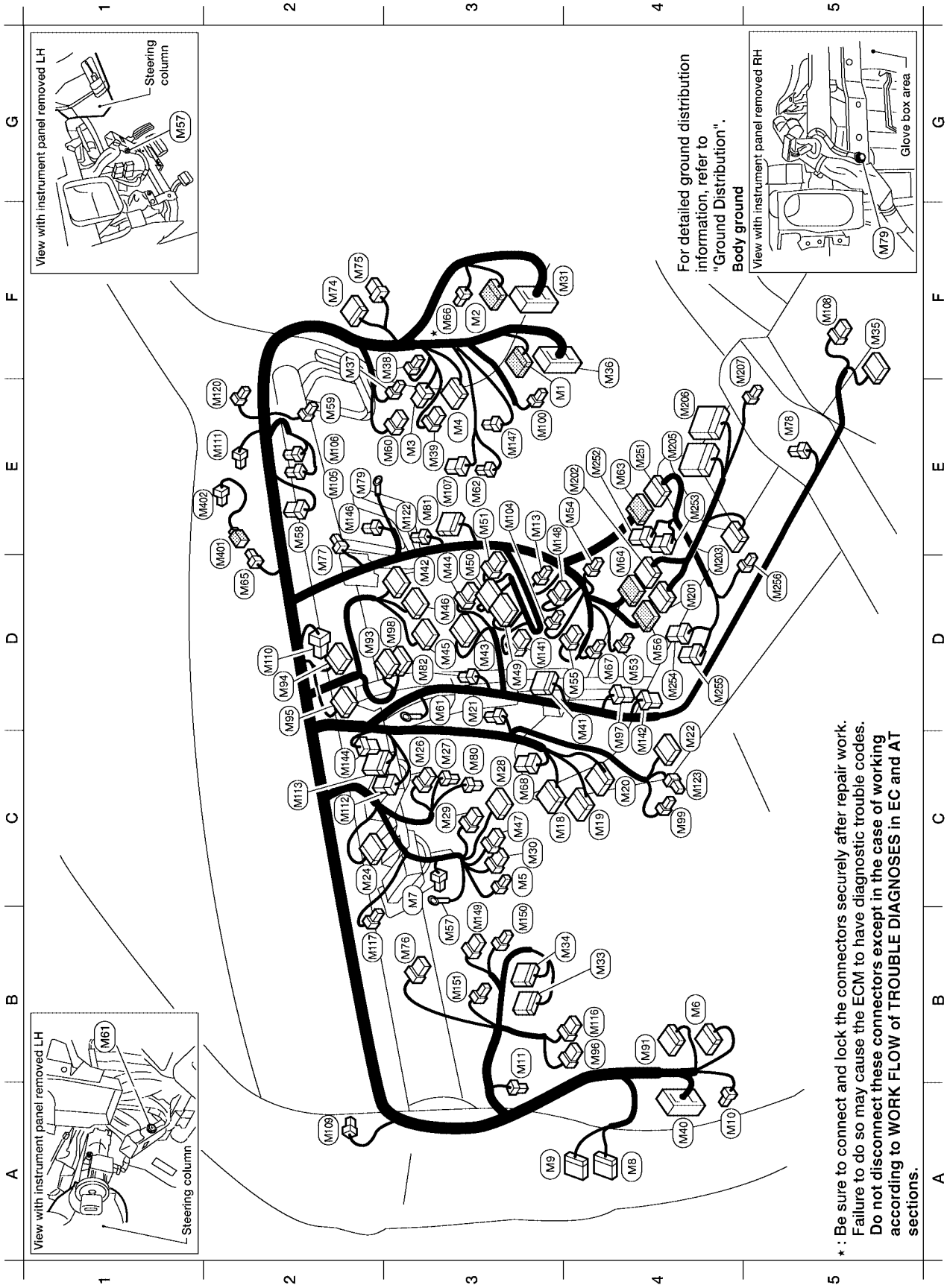

E4	M1	W/16	: To R1
F3	M2	W/12	: To R2 (with sunroof)
E3	M3	W/8	: Fuse block (J/B)
E3	M4	W/16	: Fuse block (J/B)
C3	M5	W/3	: Illumination control switch
B4	M6	W/10	: To E10
B3	M7	L/5	: Water valve relay
A4	M8	W/16	: To D2
A4	M9	BR/24	: To D1
A4	M10	Y/4	: To E29
B3	M11	B/1	: Parking brake switch
E3	M13	W/3	: Front passenger air bag off indicator
C3	M18	W/40	: BCM (body control module)
C4	M19	W/15	: BCM (body control module)
C4	M20	B/15	: BCM (body control module)
D3	M21	W/4	: NATS antenna amplifier
C4	M22	W/16	: Data link connector
C2	M24	W/40	: Combination meter
C3	M26	W/6	: Ignition switch
C3	M27	W/4	: Key switch/key lock sol (floor shift)
C3	M28	W/16	: Combination switch
C3	M29	Y/6	: Combination switch (spiral cable)
C3	M30	GR/8	: Combination switch (spiral cable)
F4	M31	SMJ	: To E152
B4	M33	W/32	: Automatic drive positioner control unit
B4	M34	W/16	: Automatic drive positioner control unit
F5	M35	Y/28	: Air bag diagnosis sensor unit
F4	M36	SMJ	: To B149
E2	M37	B/1	: Fuse block (J/B)
E3	M38	B/2	: Fuse block (J/B)
E3	M39	W/8	: Fuse block (J/B)
A4	M40	SMJ	: To B69
C4	M41	W/16	: Satellite radio tuner (pre-wiring)
D3	M42	W/12	: Audio unit
D3	M43	W/10	: Audio unit
D3	M44	W/6	: Audio unit
D3	M45	W/16	: Audio unit
D3	M46	W/20	: Audio unit
C3	M47	W/8	: Steering angle sensor
D3	M49	B/26	: Front air control
D3	M50	W/18	: Front air control
E3	M51	W/8	: Front blower switch
D4	M53	B/2	: Front power socket LH
E3	M54	B/2	: Front power socket RH (for cigarette lighter)
D4	M55	W/8	: Hazard switch
D4	M56	W/16	: To M201 (floor shift)
B3	M57	-	: Body ground
E2	M58	B/6	: Intake door motor
E2	M59	BR/2	: Glove box lamp
E3	M60	W/6	: Fuse block (J/B)
D3	M61	-	: Body ground
E3	M62	B/2	: Front blower motor
E4	M63	BR/20	: To M251 (floor shift)
D4	M64	BR/24	: To M202 (floor shift)
D2	M65	W/4	: To M401
F3*	M66	B/1	: To E33
D4	M67	GR/8	: Tow mode switch (column shift)
C3	M68	W/8	: A/T device (column shift)
F2	M74	BR/20	: To D102
F2	M75	W/8	: To D101
B3	M76	W/6	: Electric brake (pre-wiring)
D2	M77	Y/4	: Front pass air bag module (service replacement)
E5	M78	B/2	: Armrest power socket (bench seat)
E2	M79	-	: Body ground
C3	M80	W2	: Key switch (column shift)
E3	M81	GR/12	: Shift lock control unit (floor shift)
D3	M82	W/2	: Circuit breaker-2
B4	M91	W/16	: To E26
D2	M93	W/24	: Display unit (with NAVI)
D2	M94	W/24	: Display control unit (with NAVI)
D2	M95	W/32	: Display control unit (with NAVI)
B4	M96	BR/6	: Pedal adjusting switch
C4	M97	BR/7	: Heated seat relay
D3	M98	W/24	: AV switch
C4	M99	BR/2	: Foot lamp LH
E3	M100	BR/2	: Foot lamp RH
E3	M104	W/4	: Auxiliary in jack (audio)
E2	M105	Y/2	: Front passenger air bag module
E2	M106	O/2	: Front passenger air bag module
E3	M107	BR/6	: Front blower motor relay
F5	M108	B/6	: Yaw rate/side decel G-sensor (VDC)
A2	M109	BR/2	: Front tweeter LH
D2	M110	BR/2	: Center speaker (with premium audio)
E2	M111	BR/2	: Front tweeter RH
C2	M112	W/8	: Audio amplifier (with premium audio)
C2	M113	L/24	: Audio amplifier (with premium audio)
B4	M116	GR/8	: Rear sonar system OFF switch
B2	M117	B/2	: Sonar buzzer
E2	M120	W/4	: Remote keyless entry receiver
E3	M122	B/4	: Front blower motor resistor
C4	M123	W/2	: Tire pressure warning check connector
D3	M141	W/8	: 4WD shift switch
C4	M142	B/6	: Mode door motor
C2	M144	B/6	: Defroster door motor
E2	M146	W/2	: Intake sensor
E3	M147	B/6	: Air mix door motor (front)
D3	M148	GR/6	: VDC OFF switch (column shift)
B3	M149	W/6	: Cargo lamp switch
B3	M150	L/4	: Cargo lamp relay
B3	M151	W/2	: Condenser-3

Console sub-harness (floor shift)

D4	M201	W/16	: To M56
E4	M202	BR/24	: To M64
D4	M203	W/12	: A/T device
E4	M205	GR/16	: DVD player
E4	M206	L/16	: DVD player
F5	M207	B/2	: Console power socket

Console switch sub-harness (floor shift)

E4	M251	BR/20	: To M63
E4	M252	BR/6	: Heated seat switch (passenger)
E4	M253	GR/6	: VDC OFF switch
D4	M254	GR/8	: Tow mode switch
D4	M255	BR/6	: Heated seat switch (driver)
D5	M256	B/2	: A/T device illumination

Optical sensor sub-harness

D2	M401	W/4	: To M65
E2	M402	B/4	: Optical sensor

* : Refer to previous page

WKIA2855E

ENGINE ROOM HARNESS (LH VIEW)

Engine Compartment

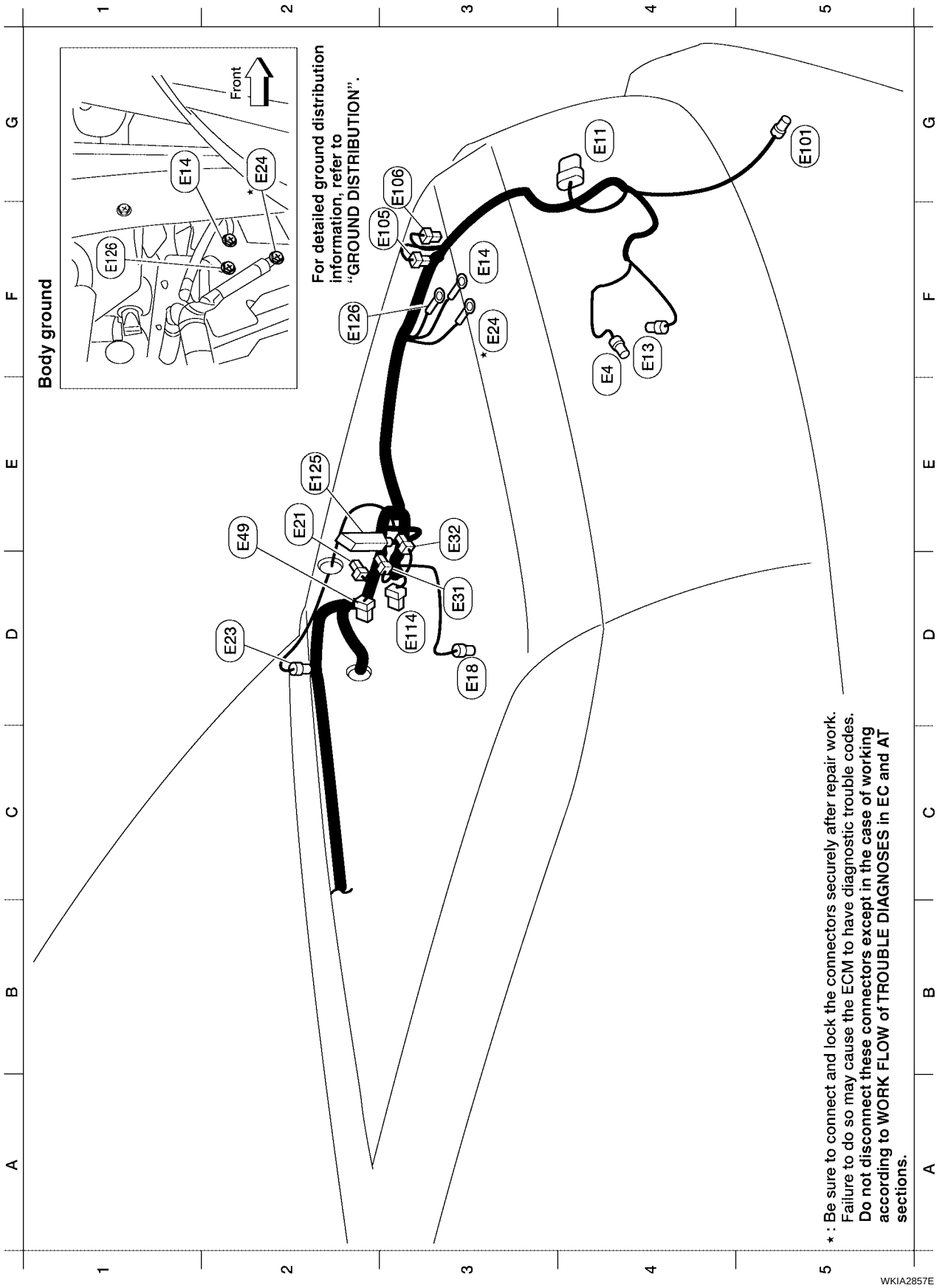

Refer to PG-46, "ENGINE ROOM HARNESS (RH VIEW)" for continuation of engine room harness.

E4	E4	Y/2	: Crash zone sensor
G4	E11	B/6	: Front combination lamp LH
F4	E13	GR/2	: Ambient sensor 2
F3	E14	-	: Body ground
D3	E18	GR/2	: Front wheel sensor LH
E2	E21	GR/2	: Brake fluid level switch
D2	E23	GR/6	: Front wiper motor
F3	*E24	-	: Body ground
D3	E31	B/3	: Front pressure sensor
E3	E32	B/3	: Rear pressure sensor
E2	E49	B/6	: Active booster
G5	E101	B/2	: Front fog lamp LH
F3	E105	GR/2	: Washer motor
G3	E106	BR/2	: Washer fluid level switch
D3	E114	B/6	: Delta stroke sensor
E2	E125	B/47	: ABS actuator and electric unit (control unit)
F2	E126	-	: Body ground

WKIA2858E

* : Be sure to connect and lock the connectors securely after repair work. Failure to do so may cause the ECM to have diagnostic trouble codes.
Do not disconnect these connectors except in the case of working according to WORK FLOW of TROUBLE DIAGNOSES in EC and AT sections.

Passenger Compartment

E10	W/10	: To M6
★ E20	B/8	: Accelerator pedal position (APP) sensor
E26	W/16	: To M91
E29	Y/4	: To M10
E34	W/24	: To B40
E35	W/12	: To B41
E36	W/2	: To B42
★ E37	BR/2	: ASCD brake switch
★ E38	W/4	: Stop lamp switch (column shift)
★ E38	B/2	: Stop lamp switch (floor shift)
E50	BR/2	: To B75
E109	W/2	: Pedal adjusting motor
E110	W/3	: Pedal adjusting motor

★ : Be sure to connect and lock the connectors securely after repair work. Failure to do so may cause the ECM to have diagnostic trouble codes.
Do not disconnect these connectors except in the case of working according to WORK FLOW of TROUBLE DIAGNOSES in EC and AT sections.

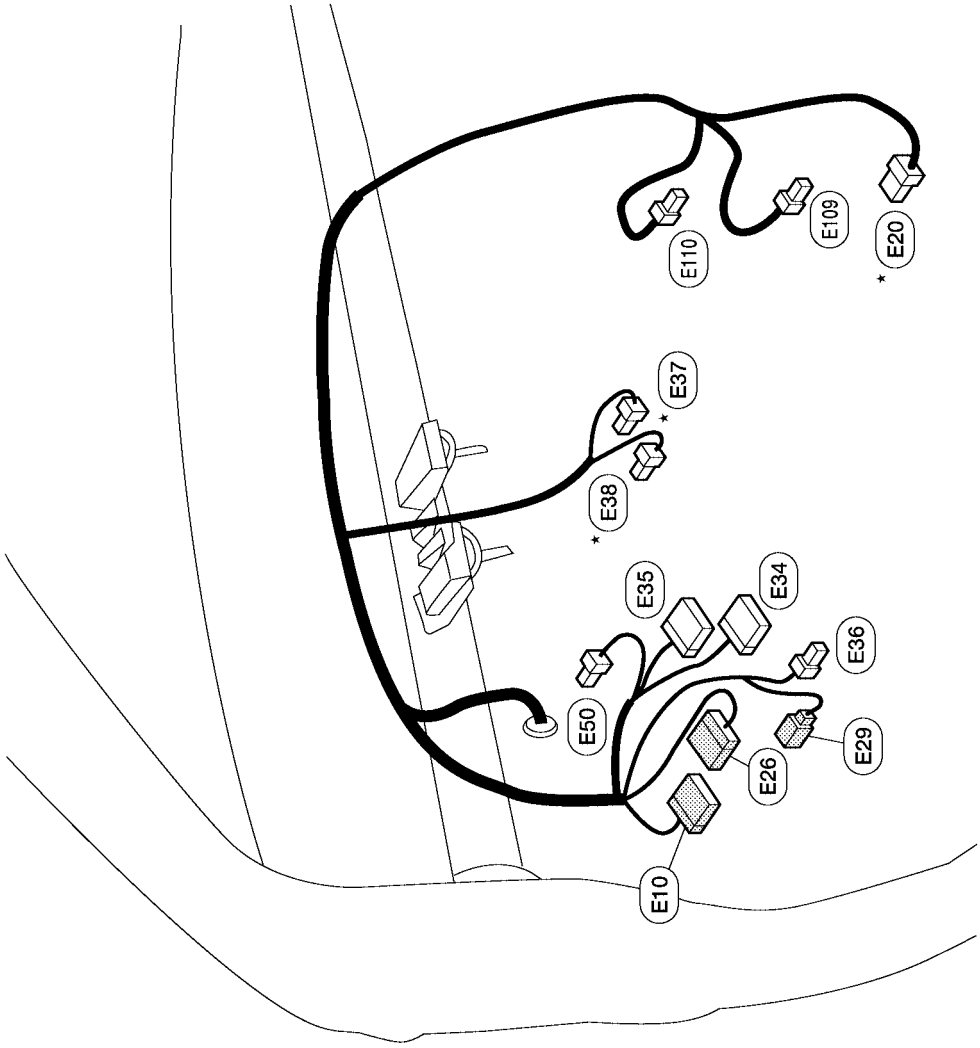

WKIA2859E

ENGINE ROOM HARNESS (RH VIEW)

Engine Compartment

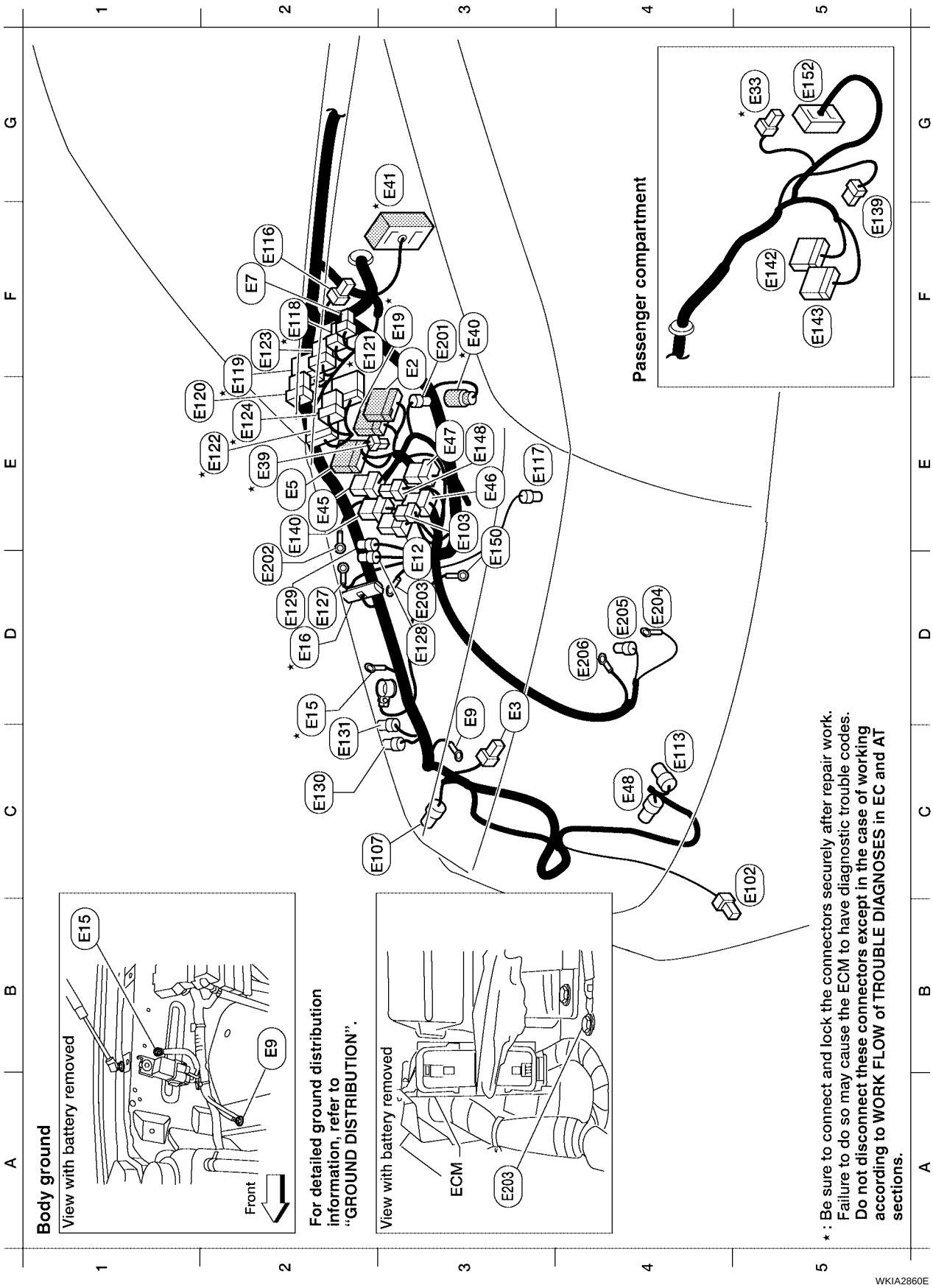

Refer to PG-43, "ENGINE ROOM HARNESS (LH VIEW)" for continuation of engine room harness.

E3		E2	W/16	: To F32
C3		E3	B/2	: Horn
E2	*	E5	W/24	: To F14
F2		E7	GR/2	: Fuse and fusible link box
C3		E9	-	: Body ground
D3		E12	B/5	: Stop lamp relay
C2	*	E15	-	: Body ground
D2	*	E16	B/32	: ECM
F3	*	E19	W/16	: To F33
G5	*	E33	B/1	: To M66
E2	*	E39	W/2	: To F34
F3	*	E40	GR/2	: To E201
F3	*	E41	SMJ	: To C1
E2		E45	BR/6	: Back-up lamp relay
E3		E46	L/5	: Transfer relay 1
E3		E47	L/5	: Transfer relay 2
C4		E48	B/3	: Refrigerant pressure sensor
C5		E102	B/2	: Front fog lamp RH
E3		E103	B/5	: Daytime light relay
C2		E107	B/6	: Front combination lamp RH
C4		E113	GR/2	: Cooling fan motor
F2		E116	W/2	: Condenser-2
E3		E117	GR/2	: Front wheel sensor RH
F2	*	E118	B/2	: IPDM E/R (intelligent power distribution module engine room)
E2	*	E119	W/16	: IPDM E/R (intelligent power distribution module engine room)
E2		E120	W/6	: IPDM E/R (intelligent power distribution module engine room)
F3	*	E121	BR/12	: IPDM E/R (intelligent power distribution module engine room)
E2	*	E122	W/12	: IPDM E/R (intelligent power distribution module engine room)
F2		E123	BR/8	: IPDM E/R (intelligent power distribution module engine room)
E2	*	E124	B/6	: IPDM E/R (intelligent power distribution module engine room)
D2		E127	-	: Fuse link box (battery)
D3		E128	GR/2	: Fuse link box (battery)
D2		E129	BR/2	: Fuse link box (battery)
C2		E130	W/2	: Compressor motor relay
C2		E131	W/2	: Compressor motor relay
F5		E139	W/8	: To B107
E2		E140	BR/6	: Trailer tow relay 2
F5		E142	W/26	: Transfer control unit
F5		E143	W/24	: Transfer control unit
E3		E148	L/4	: Trailer tow relay 1
D3		E151	-	: Battery ground
G5		E152	SMJ	: To M31

Generator sub-harness

F3		E201	GR/2	: To E40
D2		E202	B/1	: To fuse and fusible link box
D3		E203	-	: Body ground
D4		E204	-	: Generator
D4		E205	GR/2	: Generator
D4		E206	-	: Generator

* : Be sure to connect and lock the connectors securely after repair work. Failure to do so may cause the ECM to have diagnostic trouble codes. **Do not disconnect these connectors except in the case of working according to WORK FLOW of TROUBLE DIAGNOSES in EC and AT sections.**

WKIA2861E

ENGINE CONTROL HARNESS

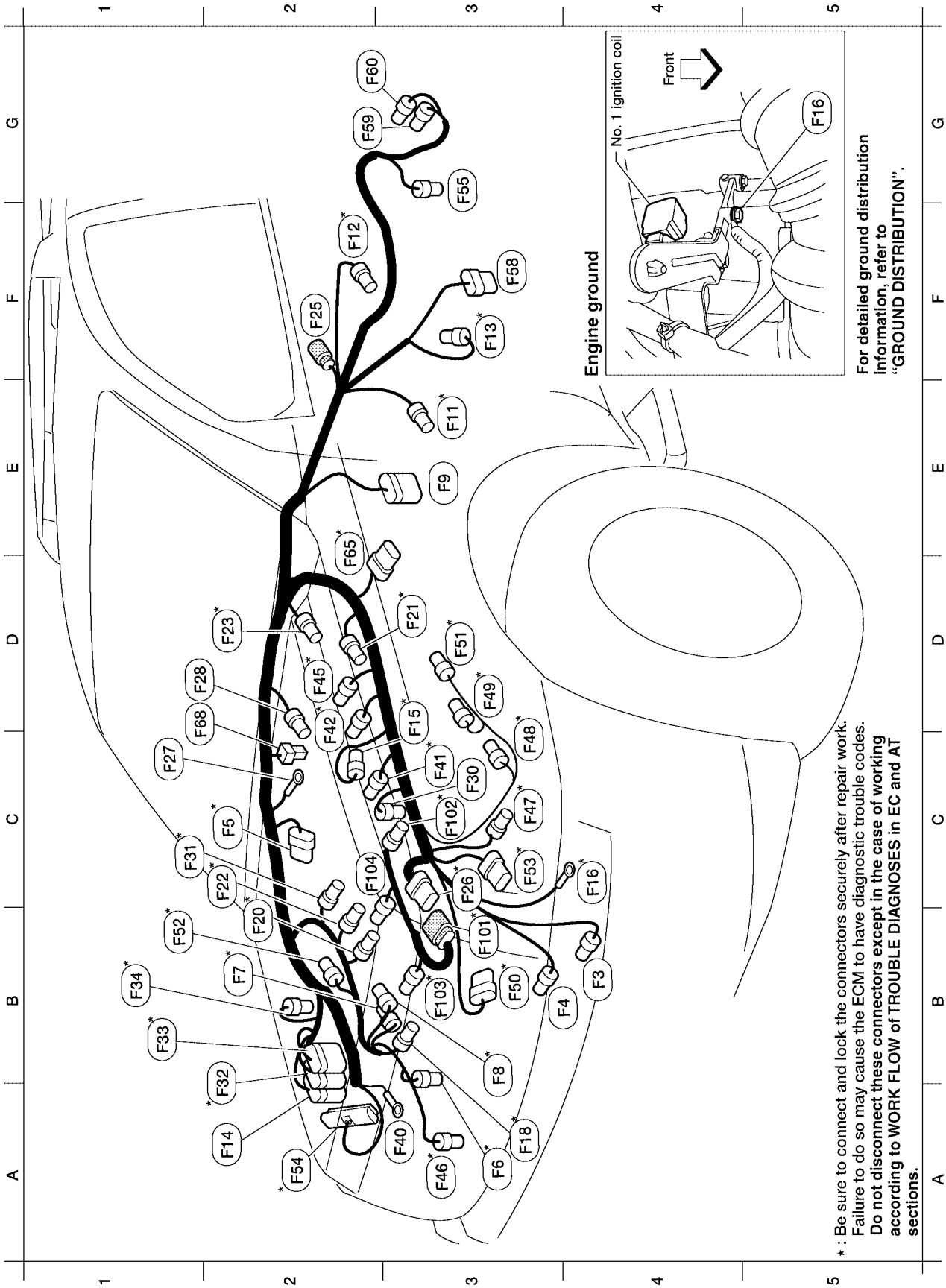

B4		F3	B/1	: A/C Compressor
B4		F4	B/3	: Oil pressure sensor
C2	*	F5	B/6	: Air/fuel ratio (A/F) sensor 1 (bank 2)
A3	*	F6	GR/3	: Ignition coil No. 2 (with power transistor)
B2	*	F7	GR/3	: Ignition coil No. 4 (with power transistor)
B3	*	F8	GR/3	: Ignition coil No. 6 (with power transistor)
E3		F9	G/10	: A/T assembly
E3	*	F11	B/3	: Crankshaft position sensor (POS)
F2	*	F12	G/4	: Heated oxygen sensor 2 (bank 2)
F3	*	F13	G/4	: Heated oxygen sensor 2 (bank 1)
A2		F14	W/24	: To E5
C3	*	F15	L/2	: EVAP canister purge volume control solenoid valve
C4	*	F16	-	: Engine ground
A3	*	F18	GR/2	: Injector No. 2
B2	*	F20	GR/2	: Injector No. 4
D3	*	F21	GR/2	: Condenser-1
C2	*	F22	GR/2	: Injector No. 6
D2	*	F23	B/3	: Camshaft position sensor (PHASE)
F2		F25	W/2	: Diode No. 2
C3	*	F26	B/6	: To F101
C1		F27	B/1	: Starter motor
D2		F28	GR/1	: Starter motor
C3	*	F30	GR/2	: Injector No. 1
C1	*	F31	GR/2	: Injector No. 8
A2	*	F32	W/16	: To E2
B1	*	F33	W/16	: To E19
B1	*	F34	W/2	: To E39
A3		F40	-	: Fusible link box (battery)
C3	*	F41	GR/2	: Injector No. 3
C2	*	F42	GR/2	: Injector No. 5
D2	*	F45	GR/2	: Injector No. 7
A3	*	F46	B/3	: Power steering pressure sensor
C3	*	F47	GR/3	: Ignition coil No. 1 (with power transistor)
C3	*	F48	GR/3	: Ignition coil No. 3 (with power transistor)
D3	*	F49	GR/3	: Ignition coil No. 5 (with power transistor)
B3	*	F50	B/6	: Electric throttle control actuator
D3	*	F51	GR/3	: Ignition coil No. 7 (with power transistor)
B1	*	F52	GR/3	: Ignition coil No. 8 (with power transistor)
C3	*	F53	B/6	: Mass air flow sensor
A2	*	F54	B/81	: ECM
G3	*	F55	B/2	: ATP switch (4WD only)
F3		F58	B/8	: Transfer control device (4WD only)
G2		F59	GR/2	: Wait detection switch (4WD only)
G2		F60	GR/2	: 4LO switch (4WD only)
D2	*	F65	B/6	: Air/fuel ratio (A/F) sensor 1 (bank 1)
D1	*	F68	B/2	: Water valve

Engine control sub-harness

B3	*	F101	B/6	: To F26
C3	*	F102	GR/2	: Knock sensor (bank 1)
B3	*	F103	GR/2	: Engine coolant temperature sensor
C2	*	F104	GR/2	: Knock sensor (bank 2)

WKIA2863E

* : Be sure to connect and lock the connectors securely after repair work. Failure to do so may cause the ECM to have diagnostic trouble codes. **Do not disconnect these connectors except in the case of working according to WORK FLOW of TROUBLE DIAGNOSES in EC and AT sections.**

CHASSIS HARNESS

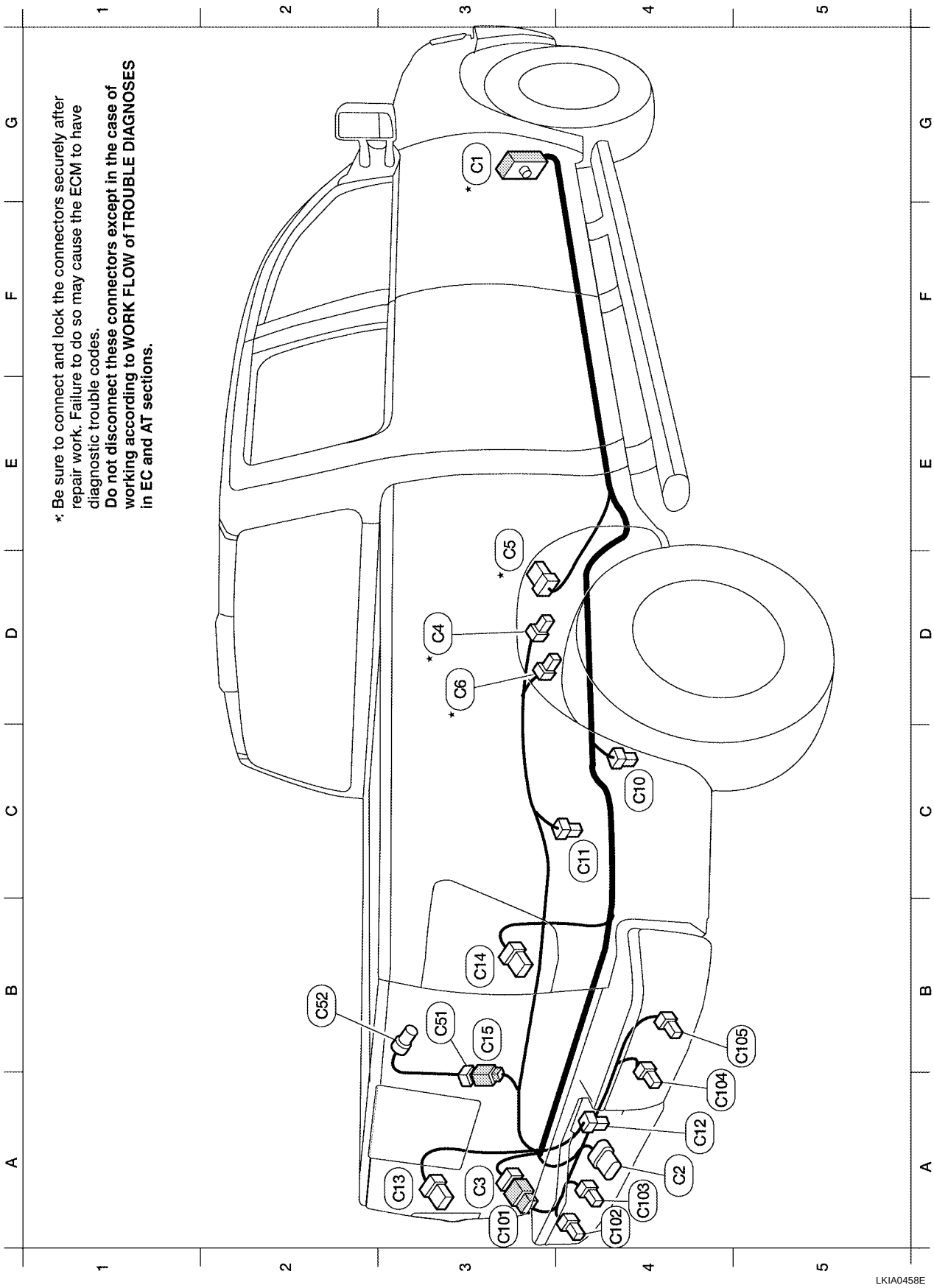

G3	* C1	SMJ	: To E41	
A4	C2	B/7	: Trailer	
A3	C3	GR/6	: To C101	
D3	* C4	GR/3	: EVAP control system pressure sensor	
D3	* C5	GR/5	: Fuel level sensor unit and fuel pump	
D3	* C6	B/2	: EVAP canister vent control valve	
C4	C10	GR/2	: Rear wheel sensor RH	
C4	C11	BR/2	: Rear wheel sensor LH	
A4	C12	W/2	: License plate lamps	
A3	C13	GR/8	: Rear combination lamp LH	
B3	C14	GR/8	: Rear combination lamp RH	
B3	C15	W/2	: To C51	
Rear power socket sub-harness				
B3	C51	W/2	: To C15	
B2	C52	BR/2	: Rear cargo bed power socket	
Rear sonar system sensor sub-harness				
A3	C101	GR/6	: To C3	
A4	C102	B/3	: Rear sonar system sensor (LH outer)	
A4	C103	B/3	: Rear sonar system sensor (LH inner)	
A4	C104	B/3	: Rear sonar system sensor (RH inner)	
B5	C105	B/3	: Rear sonar system sensor (RH outer)	

WKIA1736E

* : Be sure to connect and lock the connectors securely after repair work. Failure to do so may cause the ECM to have diagnostic trouble codes. **Do not disconnect these connectors except in the case of working according to WORK FLOW of TROUBLE DIAGNOSES in EC and AT sections.**

BODY HARNESS (KING CAB MODELS)

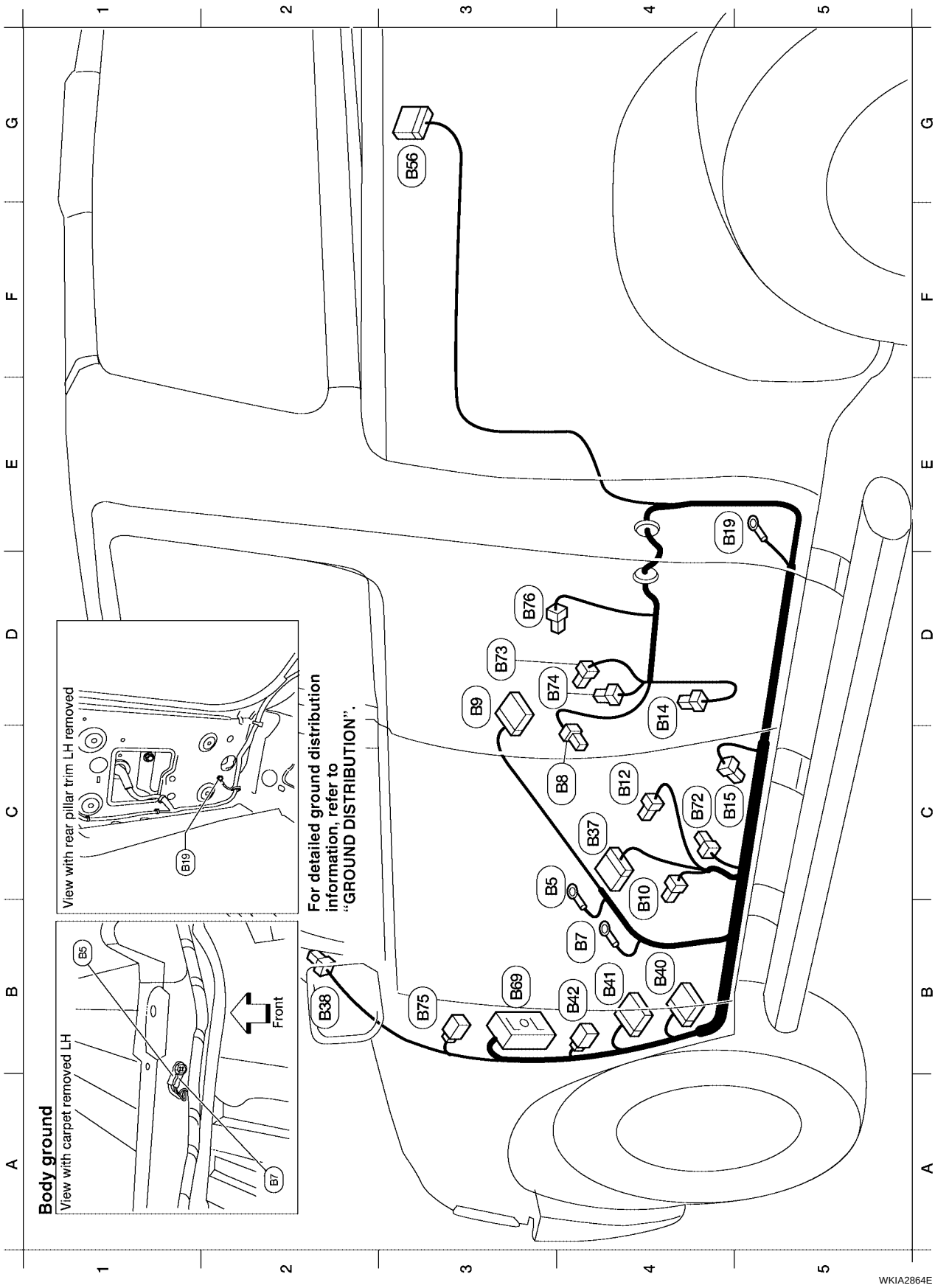

C3	B5	-	: Body ground (LH satellite sensor)
B4	B7	-	: Body ground
C4	B8	W/3	: Front door switch LH
D3	B9	Y/12	: Air bag diagnosis sensor unit
B4	B10	Y/2	: Front LH side air bag module
C4	B12	W/3	: Seat belt buckle switch LH
D4	B14	Y/2	: Front LH seat belt pre-tensioner
C4	B15	Y/2	: LH side air bag (satellite) sensor
E5	B19	-	: Body ground
C4	B37	W/16	: To P1
B2	B38	Y/2	: LH side curtain air bag module
B4	B40	W/24	: To E34
B4	B41	W/12	: To E35
B4	B42	W/2	: To E36
G3	B56	W/16	: Sonar control unit
B3	B69	SMJ	: To M40
C4	B72	W/4	: Subwoofer (with premium audio system)
D3	B73	B/2	: Rear door switch upper LH
D3	B74	B/2	: Rear door switch lower LH
B3	B75	BR/2	: To E50
D3	B76	W/2	: Rear door speaker LH

WKIA2865E

BODY HARNESS (CREW CAB MODELS)

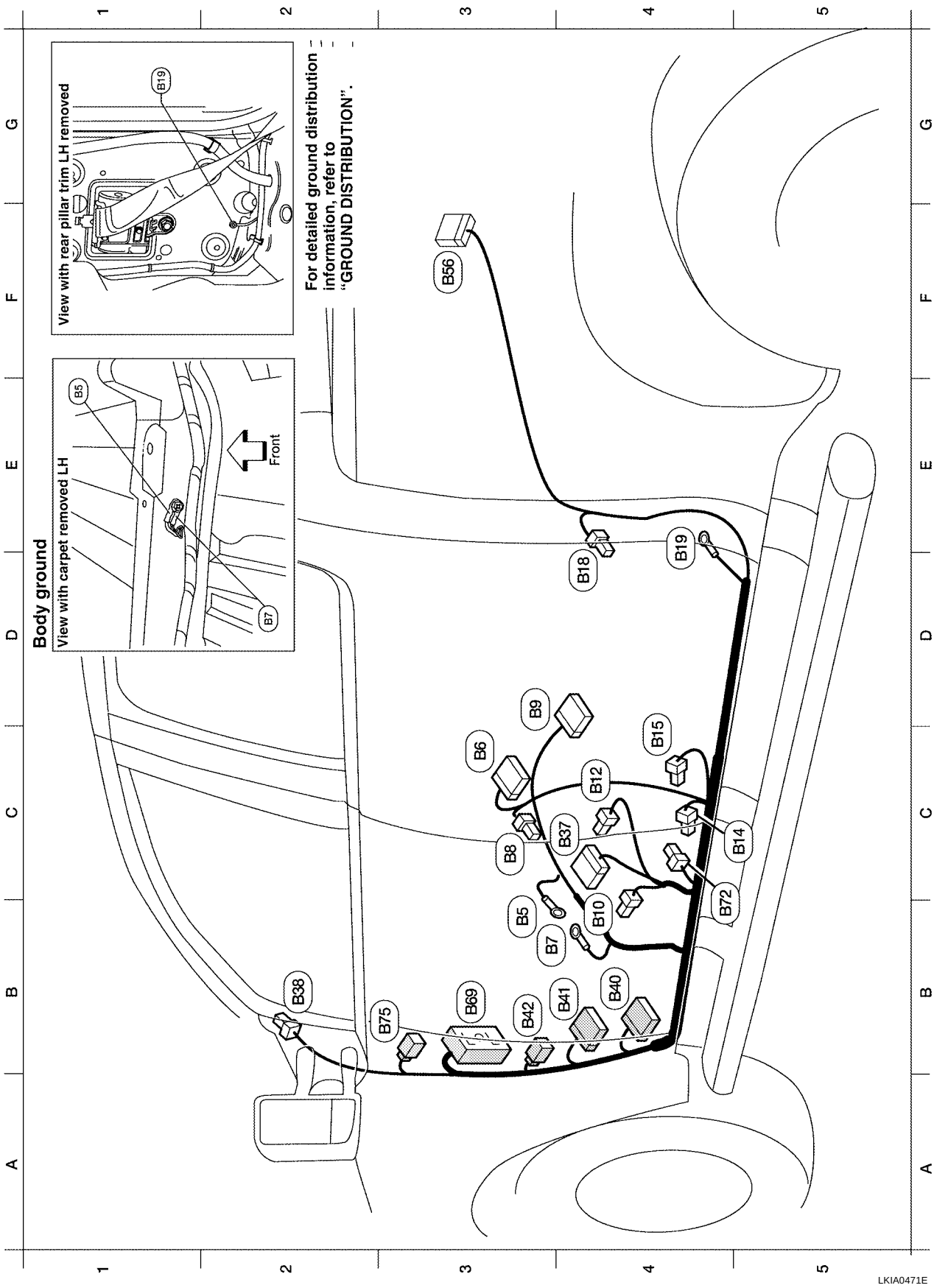

B3	B5	-	: Body ground (LH satellite sensor)
C3	B6	W/18	: To D201
B3	B7	-	: Body ground
C3	B8	W/3	: Front door switch LH
C3	B9	Y/12	: Air bag diagnosis sensor unit
B4	B10	Y/2	: Front LH side air bag module
C3	B12	W/3	: Seat belt buckle switch LH
C4	B14	Y/2	: Front LH seat belt pre-tensioner
C4	B15	Y/2	: LH side air bag (satellite) sensor
D4	B18	W/3	: Rear door switch LH
E4	B19	-	: Body ground
C3	B37	W/16	: To P1
B2	B38	Y/2	: LH side curtain air bag module
B4	B40	W/24	: To E34
B4	B41	W/12	: To E35
B3	B42	W/2	: To E36
F3	B56	W/16	: Sonar control unit
B3	B69	SMJ	: To M40
B4	B72	W/4	: Subwoofer (with premium audio system)
B3	B75	BR/2	: To E50

WKIA2866E

BODY NO. 2 HARNESS (KING CAB MODELS)

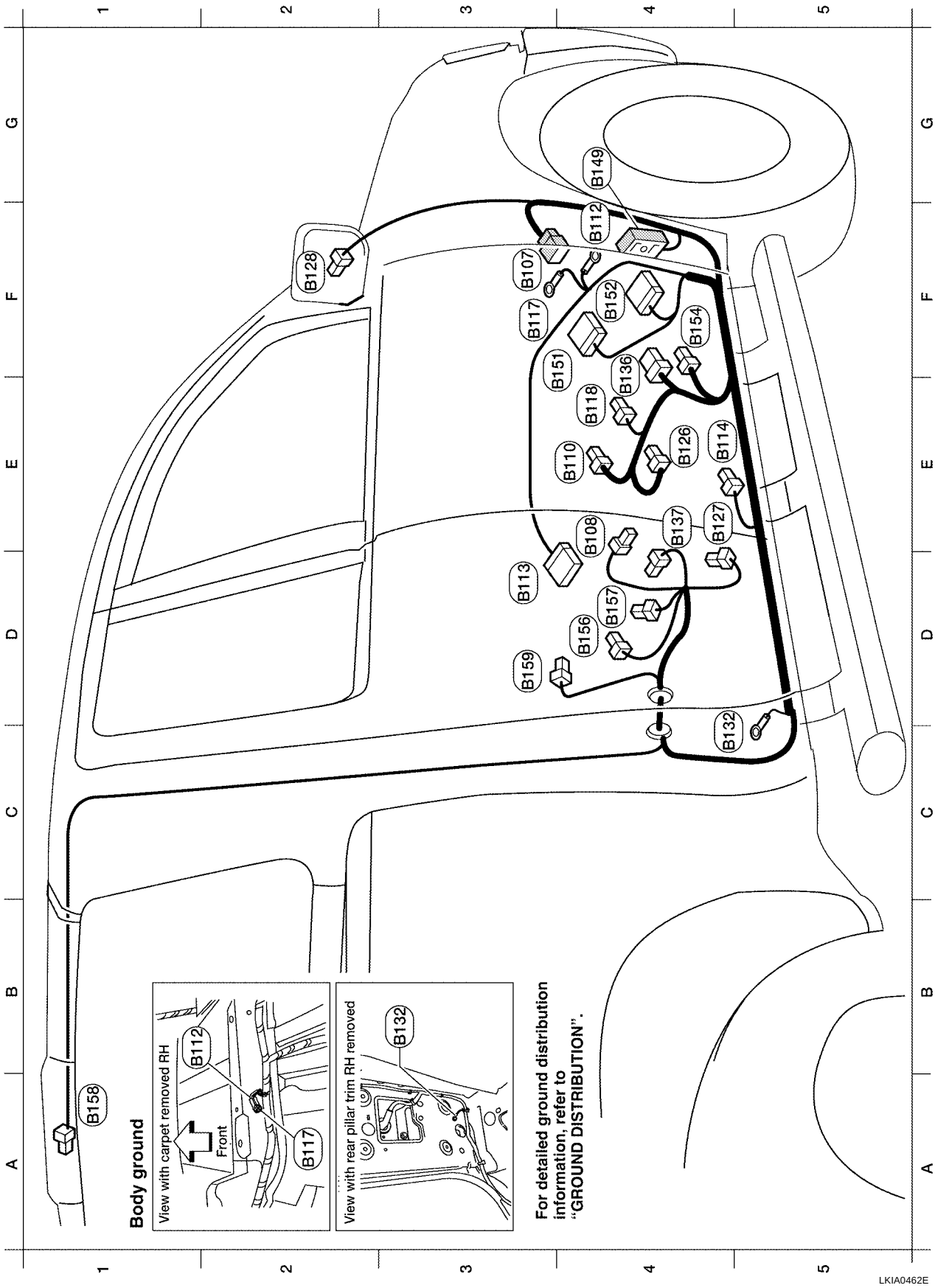

F3	B107	W/8	: To E139
D4	B108	W/3	: Front door switch RH
E4	B110	W/3	: Seat belt buckle switch RH
F4	B112	-	: Body ground (RH satellite sensor)
D3	B113	Y/12	: Air bag diagnosis sensor unit
E5	B114	Y/2	: RH side air bag (satellite) sensor
F3	B117	-	: Body ground
E4	B118	W/3	: Front seat heater RH
E4	B126	Y/2	: Front RH side air bag module
D5	B127	Y/2	: Front RH seat belt pre-tensioner
F2	B128	Y/2	: RH side curtain air bag module
C4	B132	-	: Body ground
E4	B136	W/8	: To P151
D4	B137	B/3	: Belt tension sensor
G4	B149	SMJ	: To M36
F4	B151	W/24	: NAVI control unit (with NAVI)
F4	B152	GR/24	: NAVI control unit (with NAVI)
F4	B154	W/2	: To P103
D4	B156	B/2	: Rear door switch upper RH
D4	B157	B/2	: Rear door switch lower RH
A1	B158	W/3	: High mounted stop lamp
D3	B159	W/2	: Rear door speaker RH

WKIA2867E

BODY NO. 2 HARNESS (CREW CAB MODELS)

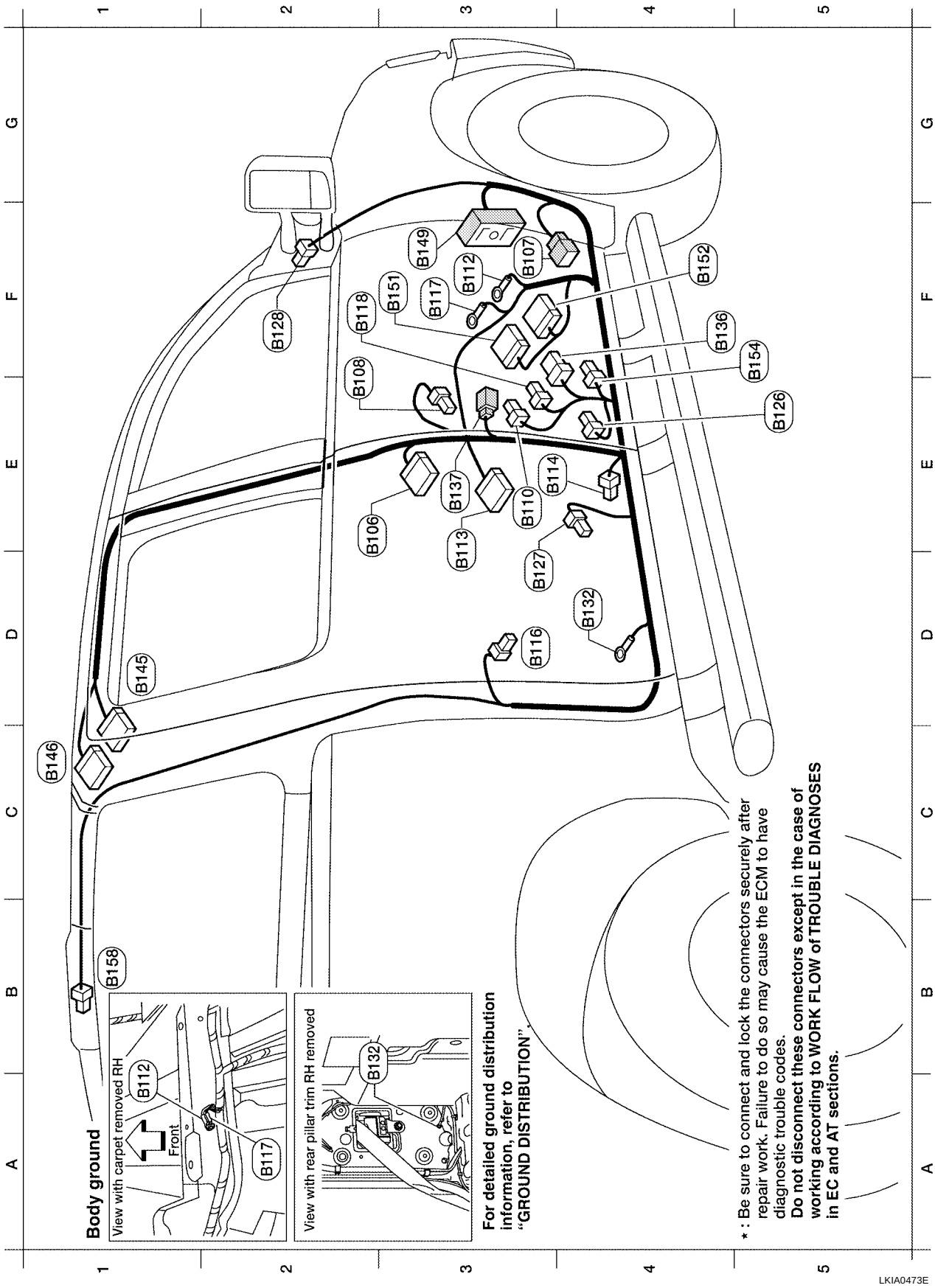

D3	B106	W/18	: To D301
F3	B107	W/8	: To E139
E2	B108	W/3	: Front door switch RH
E4	B110	W/3	: Seat belt buckle switch RH
F3	B112	-	: Body ground (RH satellite sensor)
E3	B113	Y/12	: Air bag diagnosis sensor unit
E3	B114	Y/2	: RH side air bag (satellite) sensor
D3	B116	W/3	: Rear door switch RH
F3	B117	-	: Body ground
F2	B118	W/3	: Front seat heater RH
E5	B126	Y/2	: Front RH side air bag module
D4	B127	Y/2	: Front RH seat belt pre-tensioner
F2	B128	Y/2	: RH side curtain air bag module
D4	B132	-	: Body ground
F4	B136	W/8	: To P151
E3	B137	B/3	: Belt tension sensor
D1	B145	BR/24	: To R200
C1	B146	W/16	: To R201
F3	B149	SMJ	: To M36
F3	B151	W/24	: NAVI control unit (with NAVI)
F4	B152	GR/24	: NAVI control unit (with NAVI)
F5	B154	W/2	: To P103

WKIA1740E

ROOM LAMP HARNESS

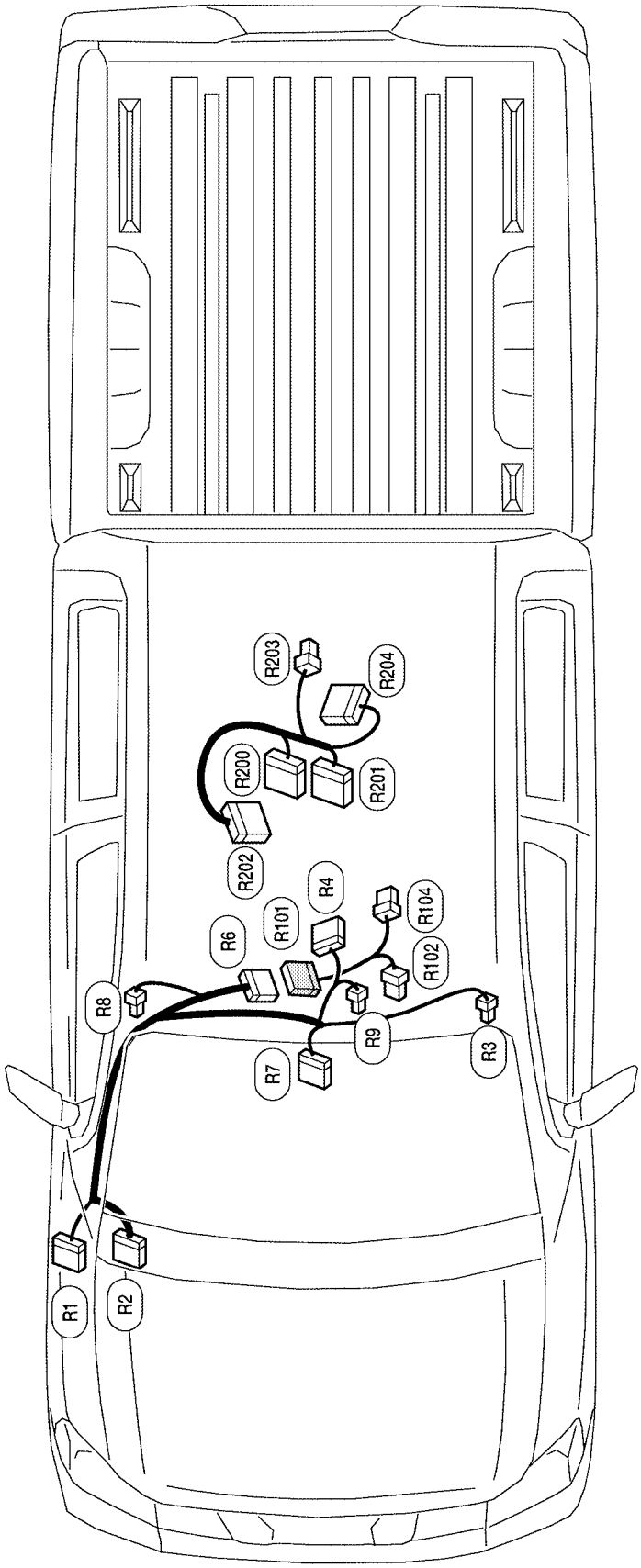

Room lamp sub-harness B (Crew Cab)

R200	BR/24	:	To B145
R201	W/16	:	To B146
R202	W/12	:	Video monitor
R203	W/3	:	Personal lamp 2nd row
R204	W/16	:	Rear audio remote control unit

R1	W/16	:	To M1
R2	W/12	:	To M2
R3	W/2	:	Vanity lamp LH
R4	W/10	:	Sunroof motor assembly
R6	W/24	:	To R101
R7	B/10	:	Auto anti-dazzling inside mirror
R8	W/2	:	Vanity lamp RH
R9	W/2	:	Room lamp

Room lamp sub-harness A (Crew Cab)

R101	W/24	:	To R6
R102	W/8	:	Front room/map lamp assembly
R104	GR/6	:	Sunroof switch

LKIA0464E

FRONT DOOR HARNESS LH

D1	BR/24	: To M9	D9	GR/6	: Front power window motor LH
D2	W/16	: To M8	D10	W/10	: Door mirror switch
D4	W/16	: Door mirror LH	D11	W/2	: Front step lamp LH
D5	W/8	: Seat memory switch	D12	W/2	: Front door speaker LH
D7	W/16	: Main power window and door lock/unlock switch	D14	B/6	: Front door lock assembly LH (key cylinder switch)
D8	W/3	: Main power window and door lock/unlock switch			

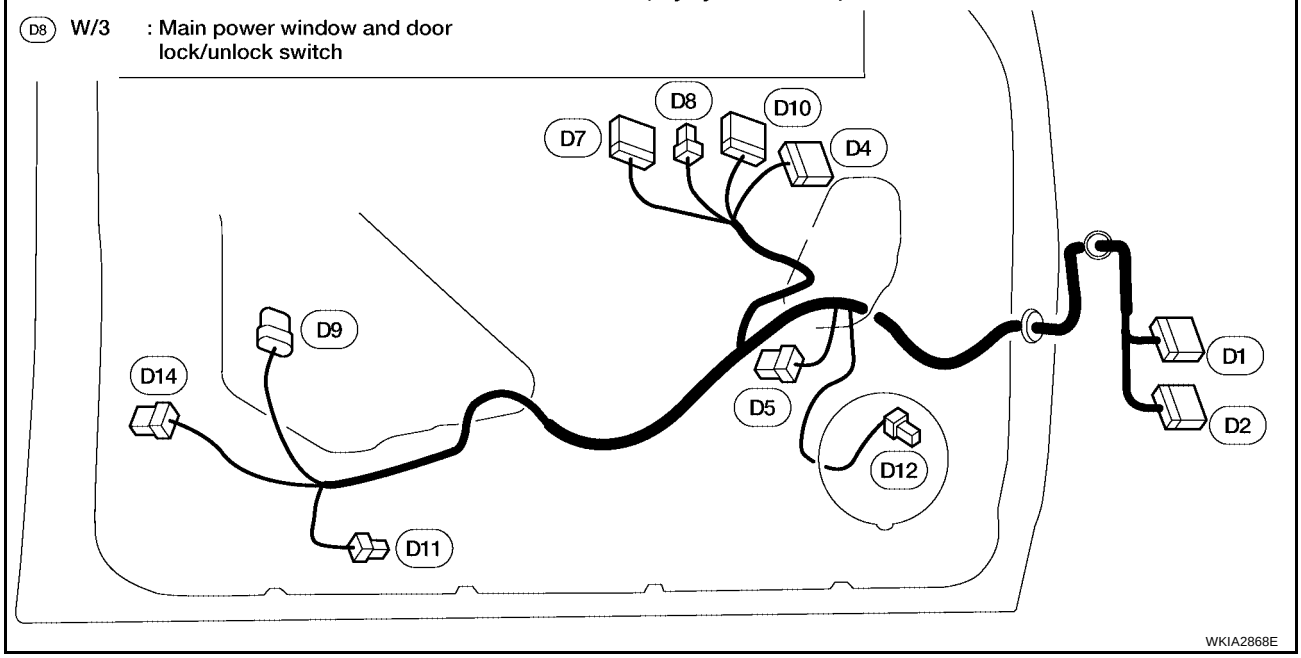

FRONT DOOR HARNESS RH

D101	W/8	: To M75	D107	W/16	: Door mirror RH
D102	W/20	: To M74	D109	W/2	: Front step lamp RH
D104	GR/6	: Front power window motor RH	D112	W/2	: Front door speaker RH
D105	W/16	: Power window and door lock/unlock switch RH	D114	B/6	: Front door lock actuator RH

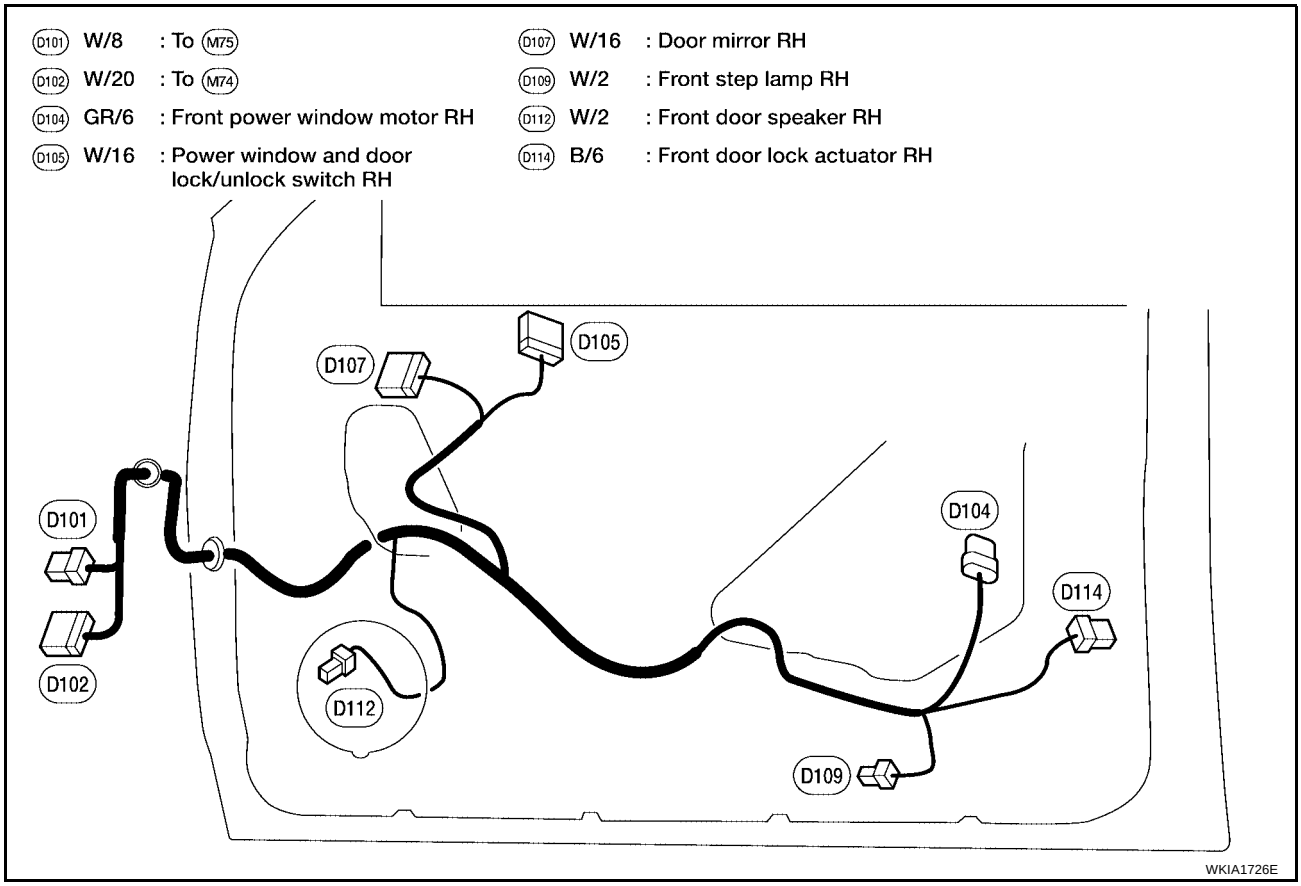

REAR DOOR HARNESS LH (CREW CAB MODELS)

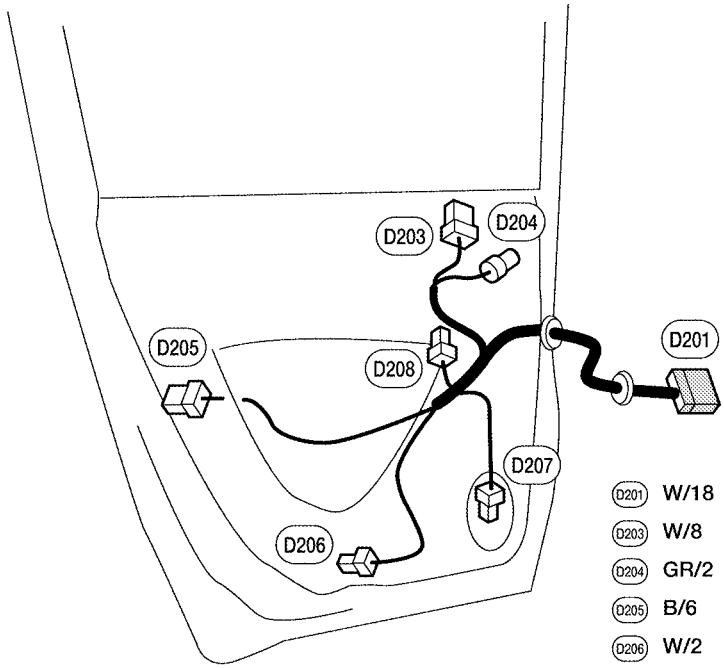

D201	W/18	: To B6
D203	W/8	: Rear power window switch LH
D204	GR/2	: Rear power window motor LH
D205	B/6	: Rear door lock actuator LH
D206	W/2	: Rear step lamp LH
D207	W/2	: Rear door speaker LH
D208	BR/2	: Rear door tweeter LH

WKIA1727E

REAR DOOR HARNESS RH (CREW CAB MODELS)

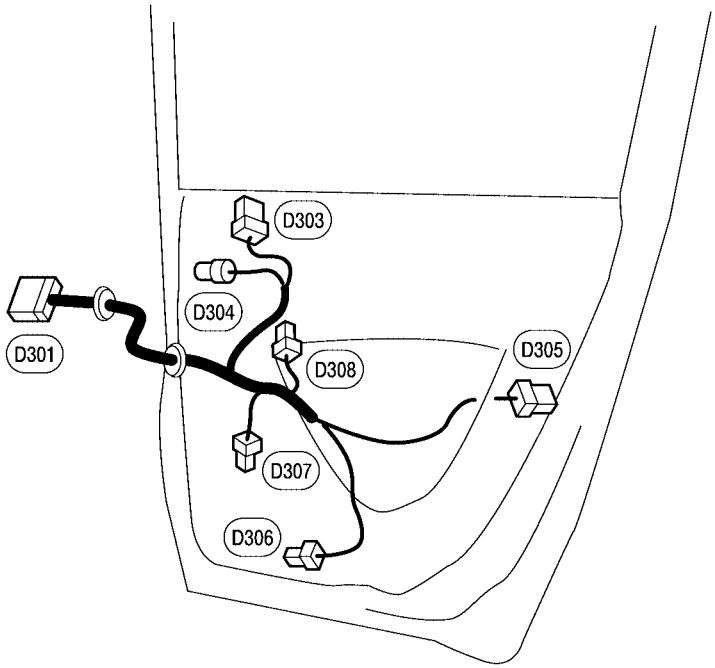

D301	W/18	: To B106
D303	W/8	: Rear power window switch RH
D304	GR/2	: Rear power window motor RH
D305	B/6	: Rear door lock actuator RH
D306	W/2	: Rear step lamp RH
D307	W/2	: Rear door speaker RH
D308	BR/2	: Rear door tweeter RH

WKIA1728E

Wiring Diagram Codes (Cell Codes)

EKS007QQ

Use the chart below to find out what each wiring diagram code stands for.
Refer to the wiring diagram code in the alphabetical index to find the location (page number) of each wiring diagram.

Code	Section	Wiring Diagram Name
A/C,M	MTC	Manual Air Conditioner
AF1B1	EC	Air Fuel Ratio Sensor 1 Bank 1
AF1B2	EC	Air Fuel Ratio Sensor 1 Bank 2
APPS1	EC	Accelerator Pedal Position Sensor
APPS2	EC	Accelerator Pedal Position Sensor
APPS3	EC	Accelerator Pedal Position Sensor
ABS	BRC	Anti-Lock Braske System
ASC/BS	EC	ASCD Brake Switch
ASC/SW	EC	ASCD Steering Switch
ASCBOF	EC	ASCD Brake Switch
ASCIND	EC	ASCD Indicator
A/T	AT	A/T Assembly
AT/IND	DI	A/T Indicator Lamp
AUDIO	AV	Audio
AUTO/DP	SE	Automatic Drive Positioner
AUTO/L	LT	Auto Light Control
BACK/L	LT	Back-up Lamp
BRK/SW	EC	Brake Switch
CAN	EC	CAN Communication Line
CAN	LAN	CAN System
CHARGE	SC	Charging System
COOL/F	EC	Cooling Fan Control
COMBSW	LT	Combination Switch
COMM	AV	Audio Visual Communication System
COMPAS	DI	Compass and Thermometer
D/LOCK	BL	Power Door Lock
DEF	GW	Rear Window Defogger
DTRL	LT	Headlamp - With Daytime Light System
DVD	AV	DVD Entertainment System
ECM/PW	EC	ECM Power Supply for Back-Up
ECTS	EC	Engine Coolant Temperature Sensor
ETC1	EC	Electric Throttle Control Function
ETC2	EC	Throttle Control Motor Relay
ETC3	EC	Throttle Control Motor
F/FOG	LT	Front Fog Lamp
F/PUMP	EC	Fuel Pump
FTTS	EC	Fuel Tank Temperature Sensor
FUELB1	EC	Fuel Injection System Bank 1
FUELB2	EC	Fuel Injection System Bank 2
H/LAMP	LT	Headlamp
HORN	WW	Horn
HSEAT	SE	Heated Seat
I/MIRR	GW	Inside Mirror (Auto Anti-Dazzling Mirror)
IATS	EC	Intake Air Temperature Sensor
IGNSYS	EC	Ignition System
ILL	LT	Illumination
INJECT	EC	Injectors

INT/L	LT	Room/Map, Vanity, Cargo, Personal, Foot, Step, and Puddle Lamps
KEYLES	BL	Remote Keyless Entry System
KS	EC	Knock Sensor
MAFS	EC	Mass Air Flow Sensor
MAIN	EC	Main Power Supply and Ground Circuit
METER	DI	Speedometer, Tachometer, Temp. and Fuel Gauges
MIL/DL	EC	Malfunction Indicator Lamp
MIRROR	GW	Door Mirror
MMSW	AT	Manual Mode Switch
NATS	BL	Nissan Anti-Theft System
NAVI	AV	Navigation System
O2H2B1	EC	Rear Heated Oxygen Sensor 2 Heater Bank 1
O2H2B2	EC	Rear Heated Oxygen Sensor 2 Heater Bank 2
O2S2B1	EC	Heated Oxygen Sensor 2 Bank 1
O2S2B2	EC	Heated Oxygen Sensor 2 Bank 2
P/SCKT	WW	Power Socket
PEDAL	AP	Adjustable Pedal System
PGC/V	EC	EVAP Canister Purge Volume Control Solenoid Valve
PHASE	EC	Camshaft Position Sensor (PHASE) (Bank 1)
PNP/SW	EC	Park/Neutral Position Switch
POS	EC	Crankshaft Position Sensor (POS)
POWER	PG	Power Supply Routing
PRE/SE	EC	EVAP Control System Pressure Sensor
PS/SEN	EC	Power Steering Pressure Sensor
RP/SEN	EC	Refrigerant Pressure Sensor
SEAT	SE	Power Seat
SEN/PW	EC	Sensor Power Supply
SHIFT	AT	A/T Shift Lock System
SONAR	DI	Rear Sonar System
SROOF	RF	Sunroof
SRS	SRS	Supplemental Restraint System
START	SC	Starting System
STOP/L	LT	Stop Lamp
T/TOW	LT	Trailer Tow
T/WARN	WT	Low Tire Pressure Warning System
TAIL/L	LT	Parking, License and Tail Lamps
T/F	TF	Transfer Case
TPS1	EC	Throttle Position Sensor
TPS2	EC	Throttle Position Sensor
TPS3	EC	Throttle Position Sensor
TRNSCV	BL	HOMELINK® Universal Transceiver
TURN	LT	Turn Signal and Hazard Warning Lamps
VDC	BRC	Vehicle Dynamic Control System
VEHSEC	BL	Vehicle security (theft warning) system
VENT/V	EC	EVAP Canister Vent Control Valve
WARN	DI	Warning Lamps
WINDOW	GW	Power Window
WIPER	WW	Front Wiper and Washer

ELECTRICAL UNITS LOCATION

PFP:25230

Electrical Units Location

EKS007QR

ENGINE COMPARTMENT

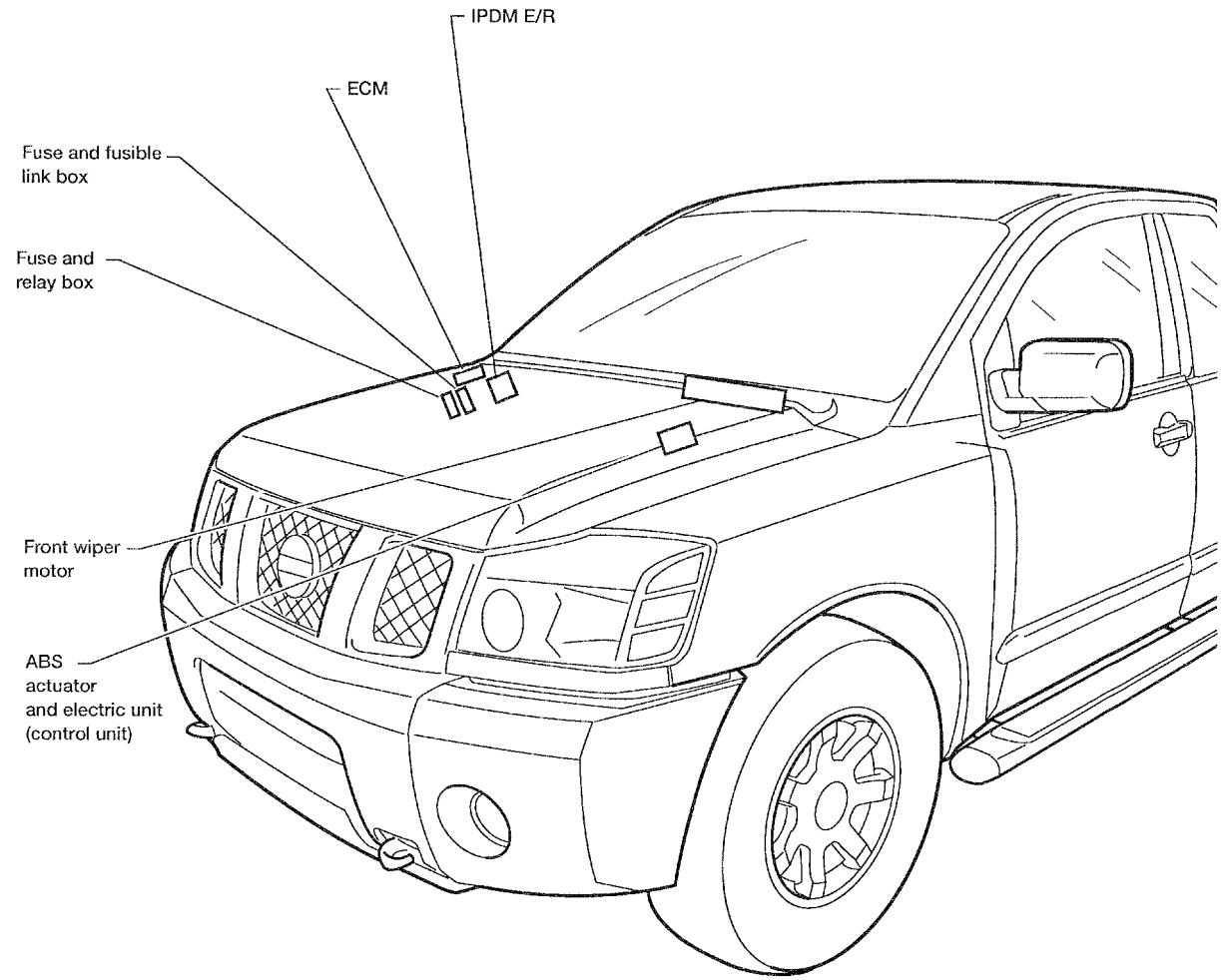

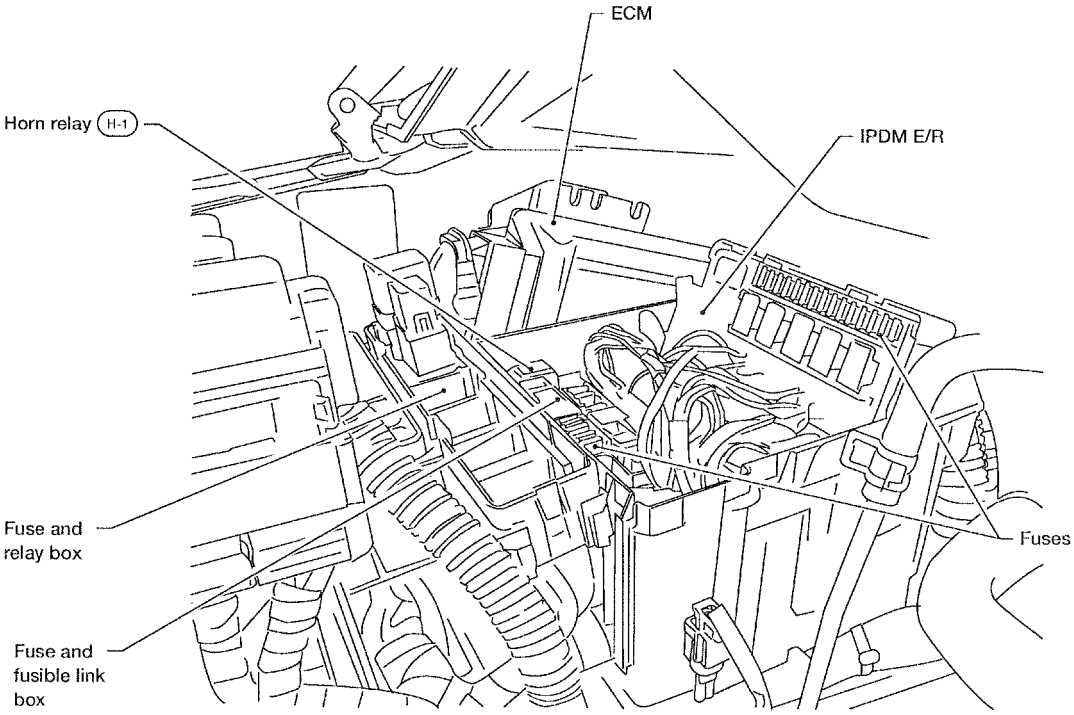

WKIA1703E

PASSENGER COMPARTMENT

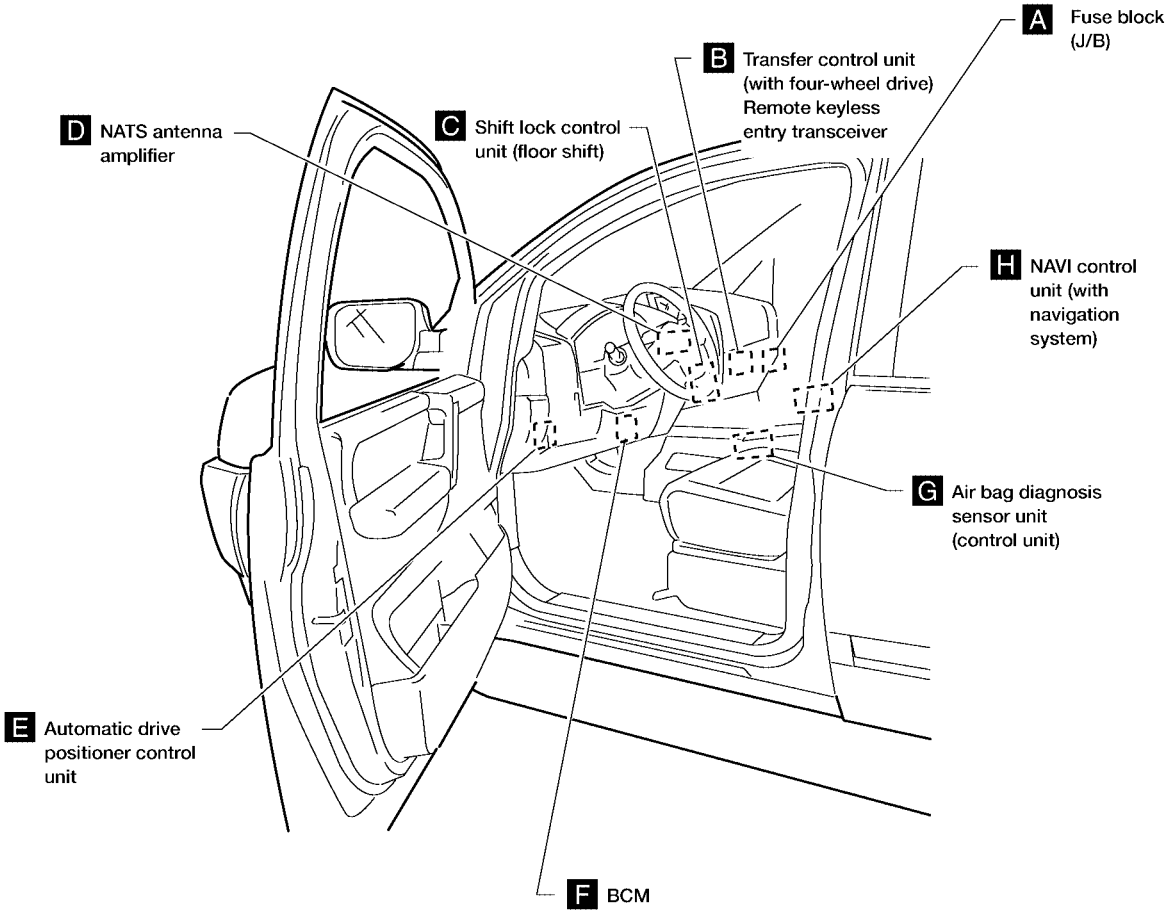

A Instrument panel side RH

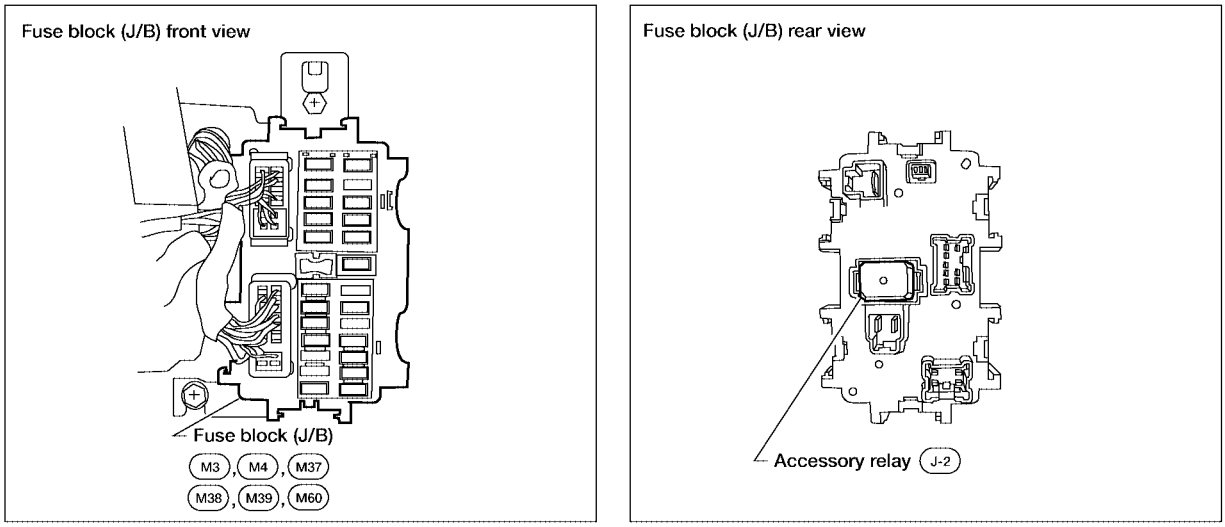

WKIA2872E

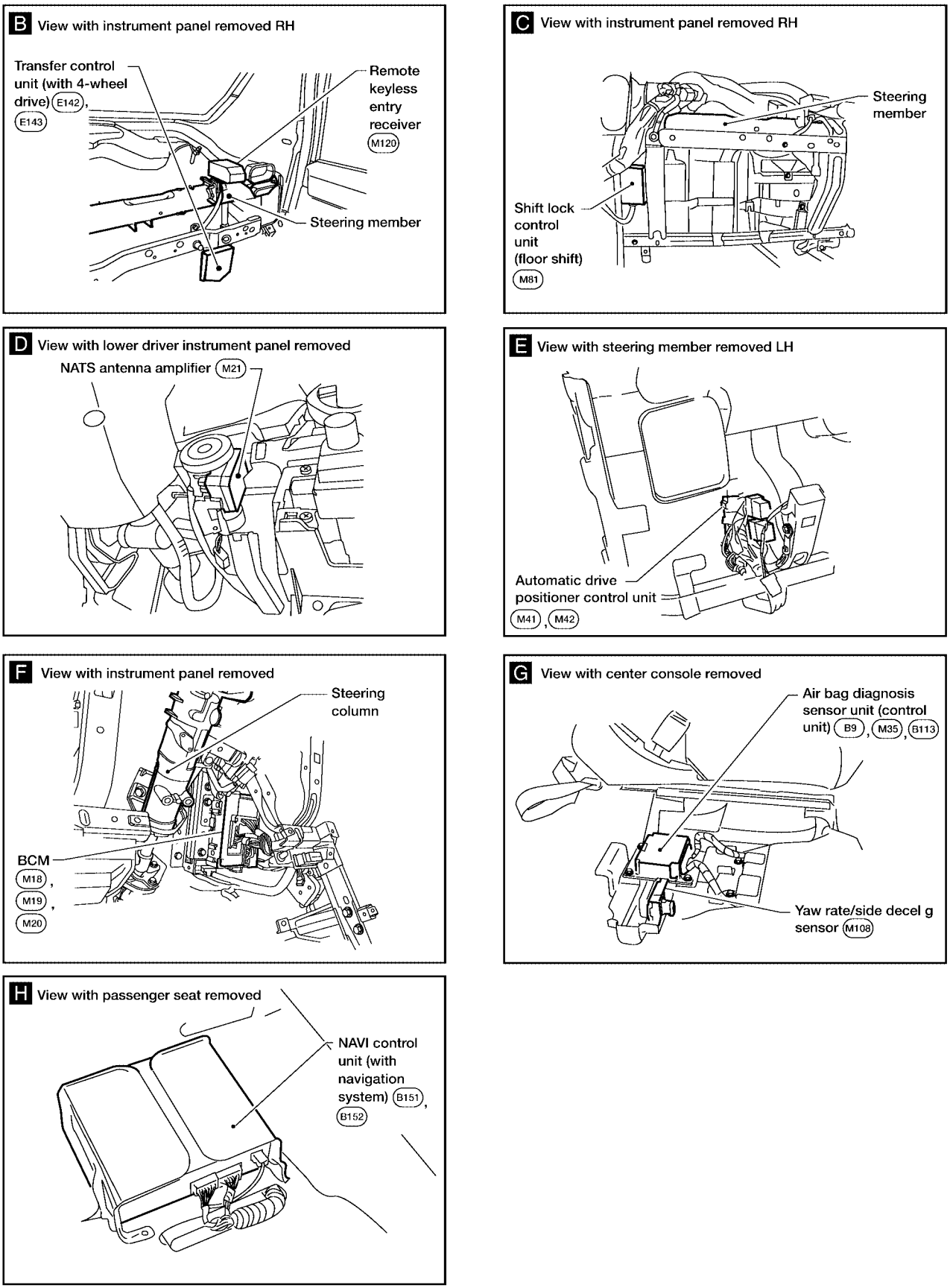
B View with instrument panel removed RH
Transfer control unit (with 4-wheel drive) E142, E143
Remote keyless entry receiver M120
Steering member
C View with instrument panel removed RH
Steering member
Shift lock control unit (floor shift) M81
D View with lower driver instrument panel removed
NATS antenna amplifier M21
E View with steering member removed LH
Automatic drive positioner control unit M41, M42
F View with instrument panel removed
Steering column
BCM M18, M19, M20
G View with center console removed
Air bag diagnosis sensor unit (control unit) B9, M35, B113
Yaw rate/side decel g sensor M108
H View with passenger seat removed
NAVI control unit (with navigation system) B151, B152

WKIA1705E

Fuse

EKS007QS

- If fuse is blown, be sure to eliminate cause of incident before installing new fuse.
- Use fuse of specified rating. Never use fuse of more than specified rating.
- Do not partially install fuse; always insert it into fuse holder properly.
- Remove fuse for “ELECTRICAL PARTS (BAT)” if vehicle is not used for a long period of time.

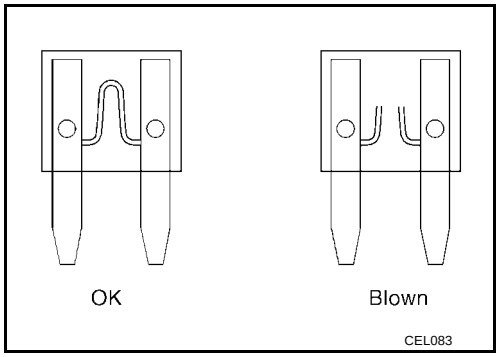

Fusible Link

EKS007QT

A melted fusible link can be detected either by visual inspection or by feeling with finger tip. If its condition is questionable, use circuit tester or test lamp.

CAUTION:

- **If fusible link should melt, it is possible that critical circuit (power supply or large current carrying circuit) is shorted. In such a case, carefully check and eliminate cause of incident.**
- **Never wrap outside of fusible link with vinyl tape.**
- **Never let fusible link touch any other wiring harness, vinyl or rubber parts.**

Circuit Breaker (Built Into BCM)

EKS007QU

For example, when current is 30A, the circuit is broken within 8 to 20 seconds.
A circuit breaker is used for the following systems:

- Power seat
- Power windows
- Power door locks
- Remote keyless entry system
- Power sunroof
- Rear window wiper

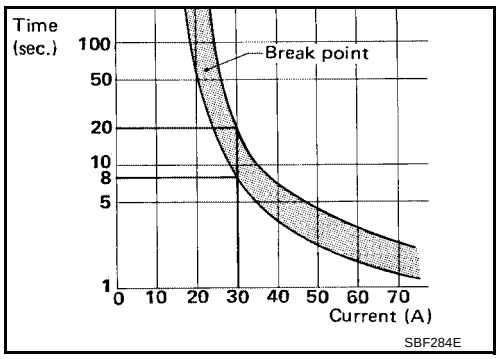

HARNESS CONNECTOR

PFP:B4341

Description

EKS007QV

HARNESS CONNECTOR (TAB-LOCKING TYPE)

- The tab-locking type connectors help prevent accidental looseness or disconnection.
- The tab-locking type connectors are disconnected by pushing or lifting the locking tab(s). Refer to the illustration below.

Refer to the next page for description of the slide-locking type connector.

CAUTION:

Do not pull the harness or wires when disconnecting the connector.

[Example]

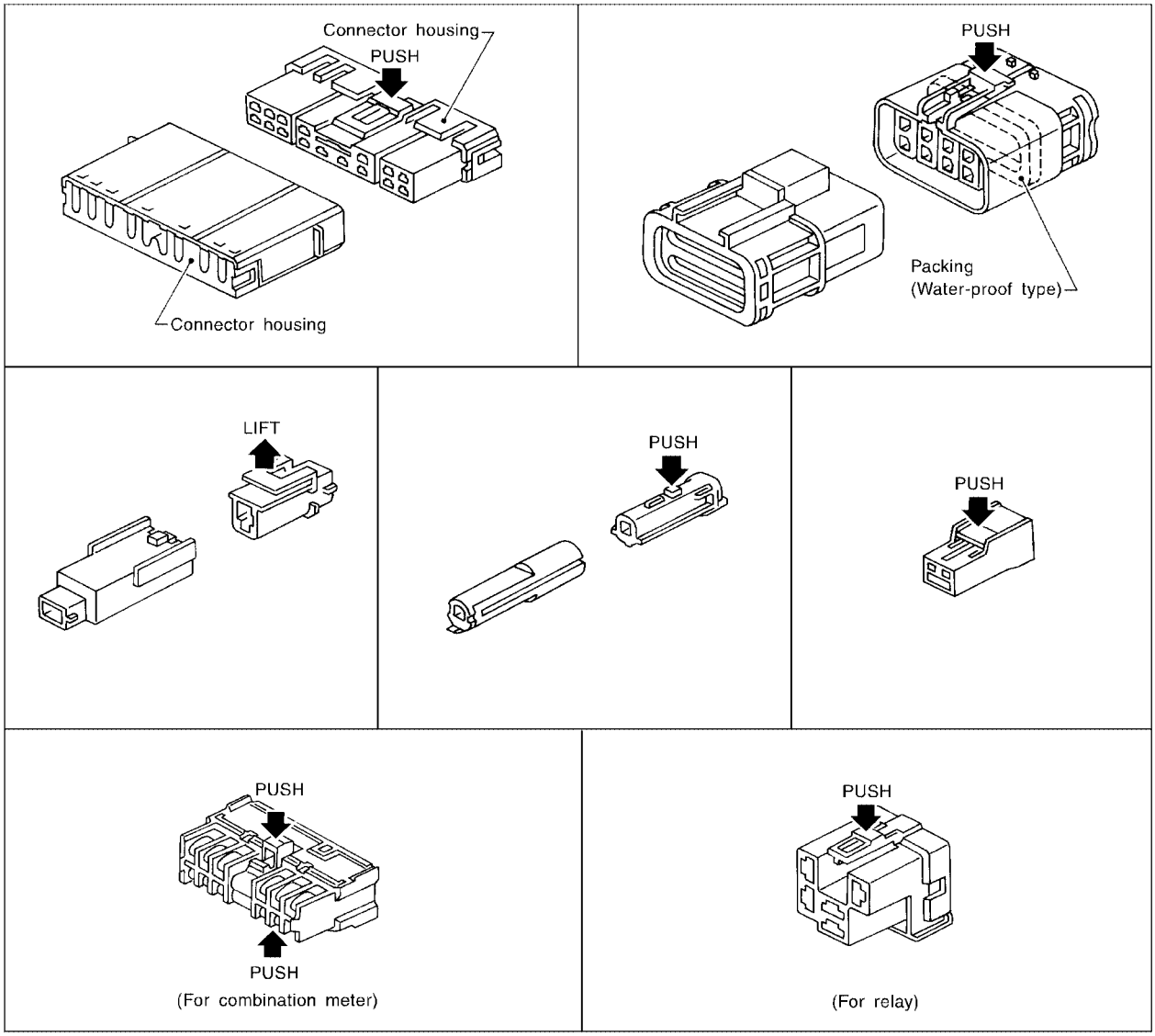

SEL769DA

HARNESS CONNECTOR (SLIDE-LOCKING TYPE)

- A new style slide-locking type connector is used on certain systems and components, especially those related to OBD.
- The slide-locking type connectors help prevent incomplete locking and accidental looseness or disconnection.
- The slide-locking type connectors are disconnected by pushing or pulling the slider. Refer to the illustration below.

CAUTION:

- **Do not pull the harness or wires when disconnecting the connector.**
- **Be careful not to damage the connector support bracket when disconnecting the connector.**

[Example]

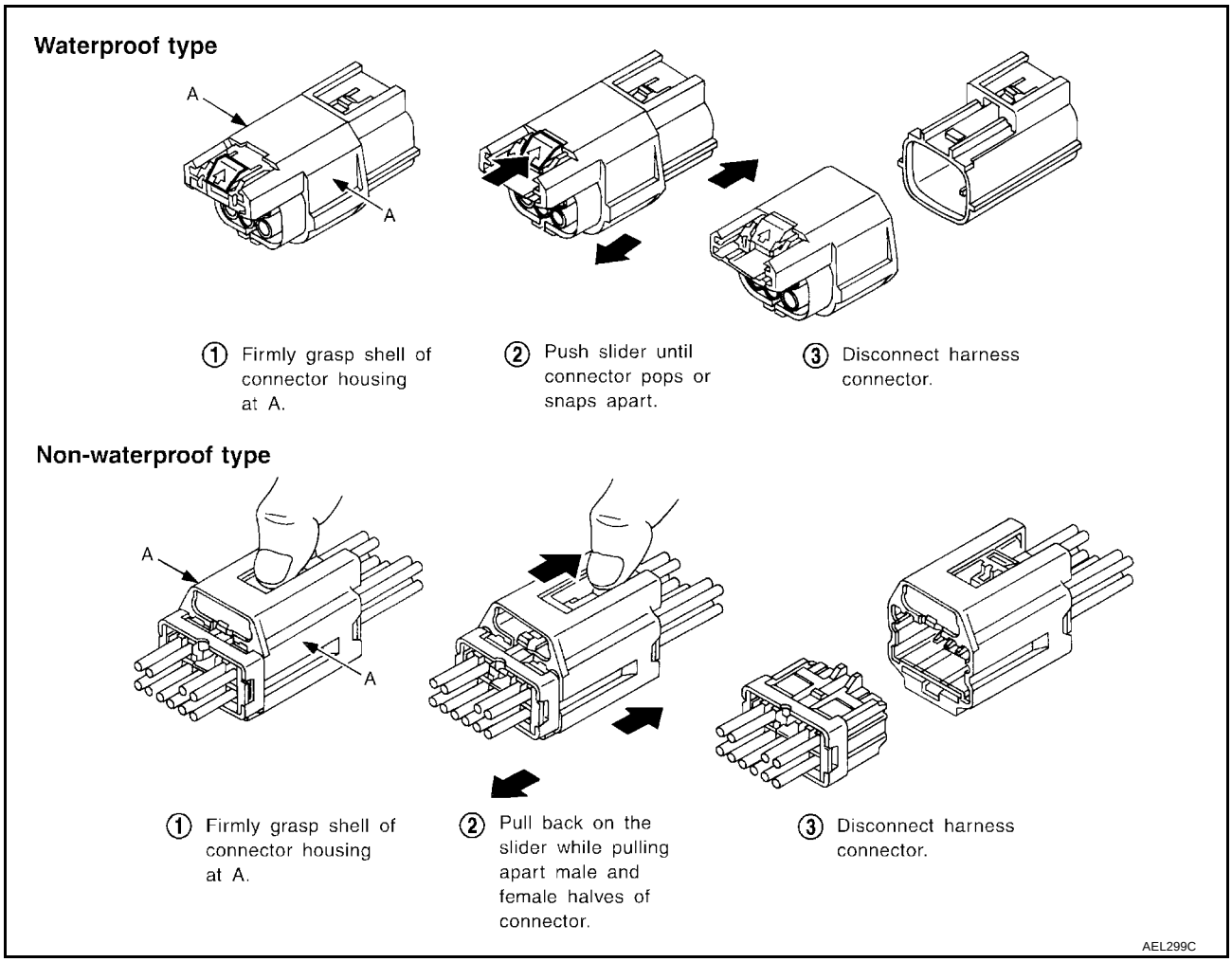

HARNESS CONNECTOR (DIRECT-CONNECT SRS COMPONENT TYPE)

- SRS direct-connect type harness connectors are used on certain SRS components such as air bag modules and seat belt pre-tensioners.
- Always pull up to release black locking tab prior to removing connector from SRS component.
- Always push down to lock black locking tab after installing connector to SRS component. When locked, the black locking tab is level with the connector housing.

CAUTION:

- **Do not pull the harness or wires when removing connectors from SRS components.**

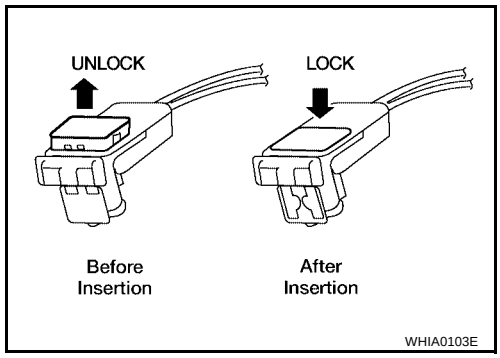

ELECTRICAL UNITS

PFP:23710

Terminal Arrangement

EKS007QW

BCM (BODY CONTROL MODULE)

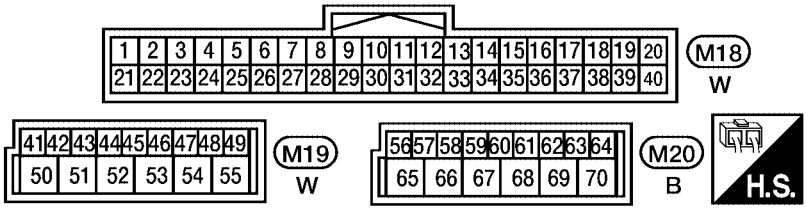

ABS ACTUATOR AND ELECTRIC UNIT (CONTROL UNIT)

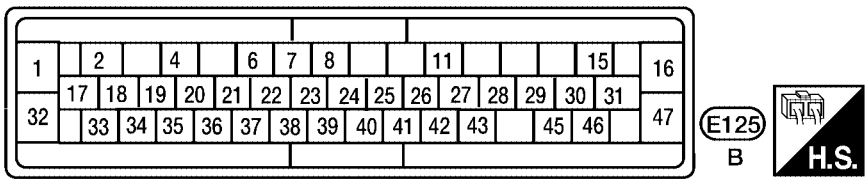

ECM

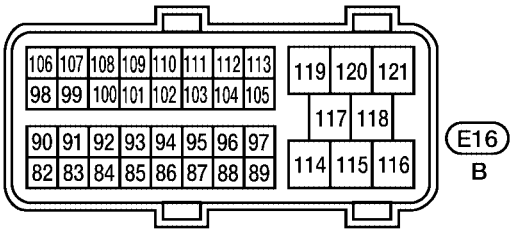

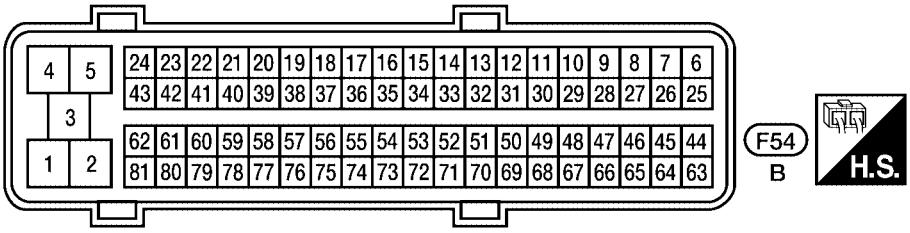

TRANSFER CONTROL UNIT

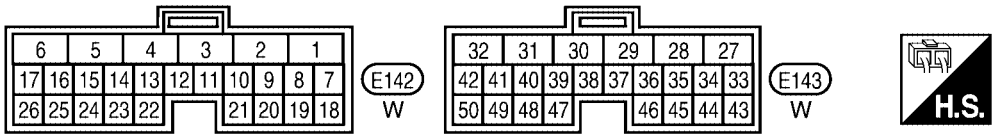

WKIA1795E

STANDARDIZED RELAY

PFP:25230

Description

EKS007QX

NORMAL OPEN, NORMAL CLOSED AND MIXED TYPE RELAYS

Relays can mainly be divided into three types: normal open, normal closed and mixed type relays.

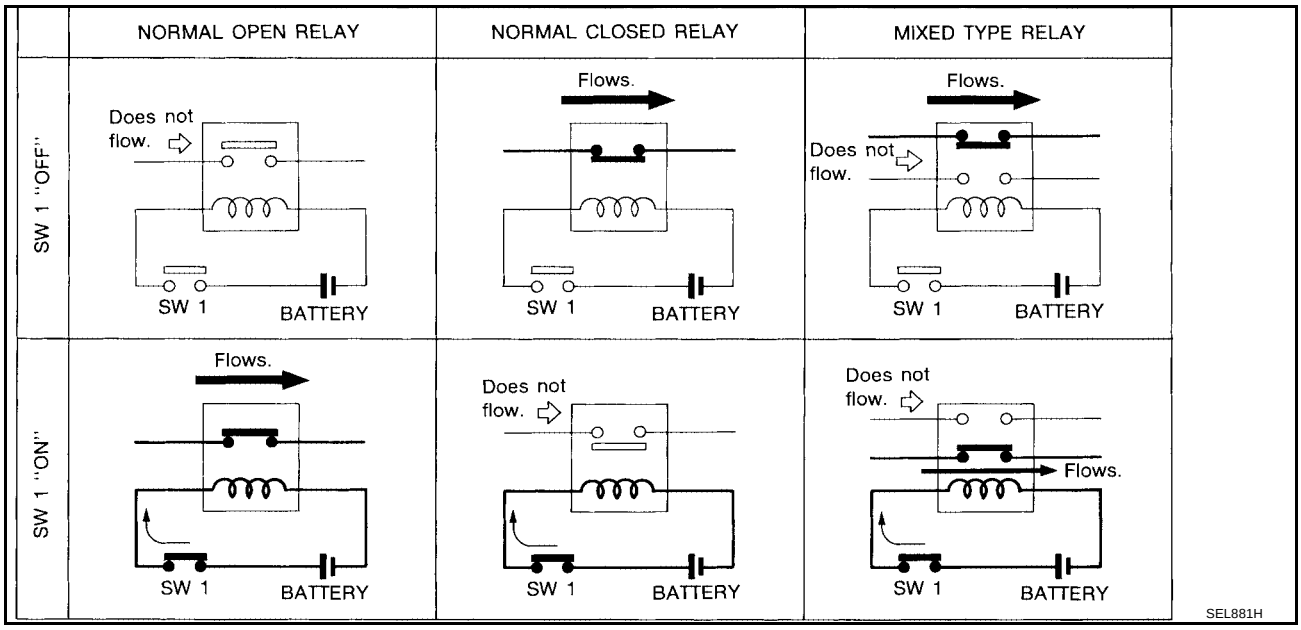

TYPE OF STANDARDIZED RELAYS

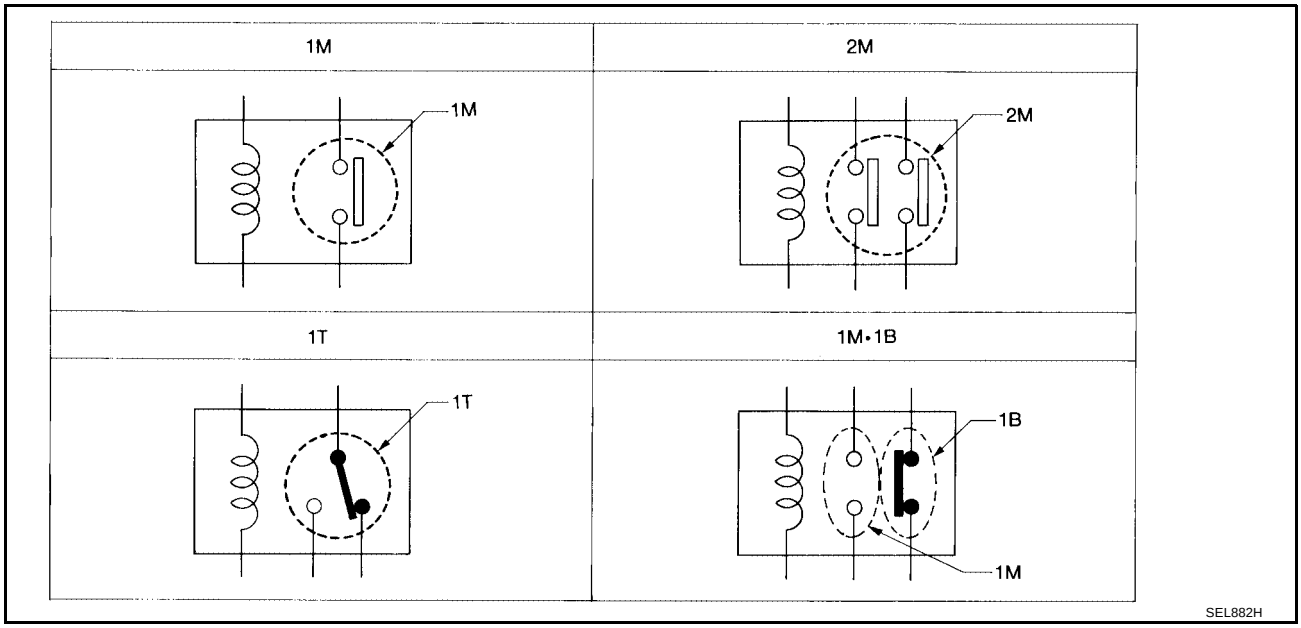

1M	1 Make	2M	2 Make
1T	1 Transfer	1M·1B	1 Make 1 Break

Type	Outer view	Circuit	Connector Symbol and connection	Case color
1T	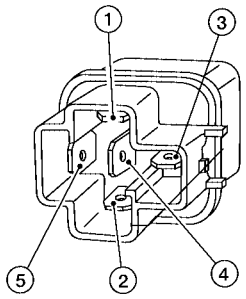	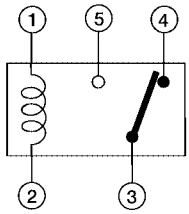	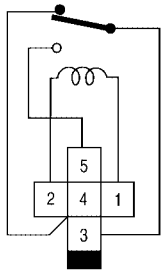	BLACK
2M	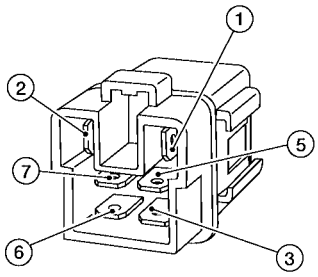	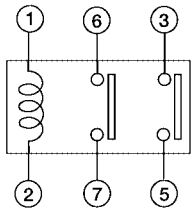	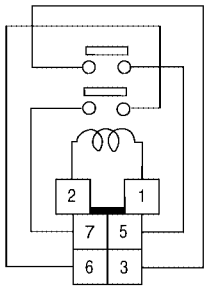	BROWN
1M -1B	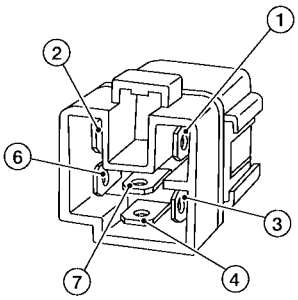	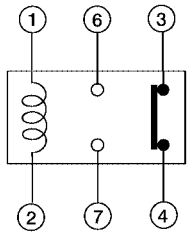	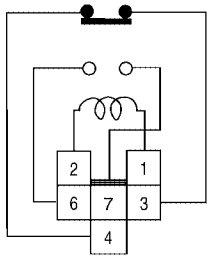	GRAY
1M	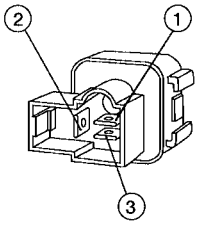	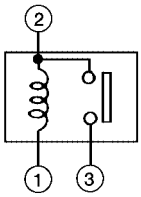	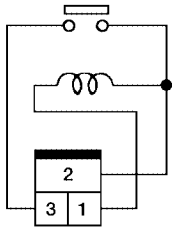	BLACK
	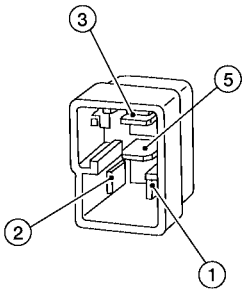	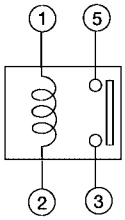	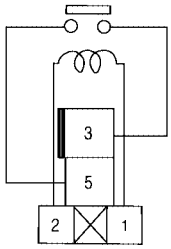	BLUE

The arrangement of terminal numbers on the actual relays may differ from those shown above.

WKIA0253E

SUPER MULTIPLE JUNCTION (SMJ)

PFP:84341

Terminal Arrangement

EKS007QY

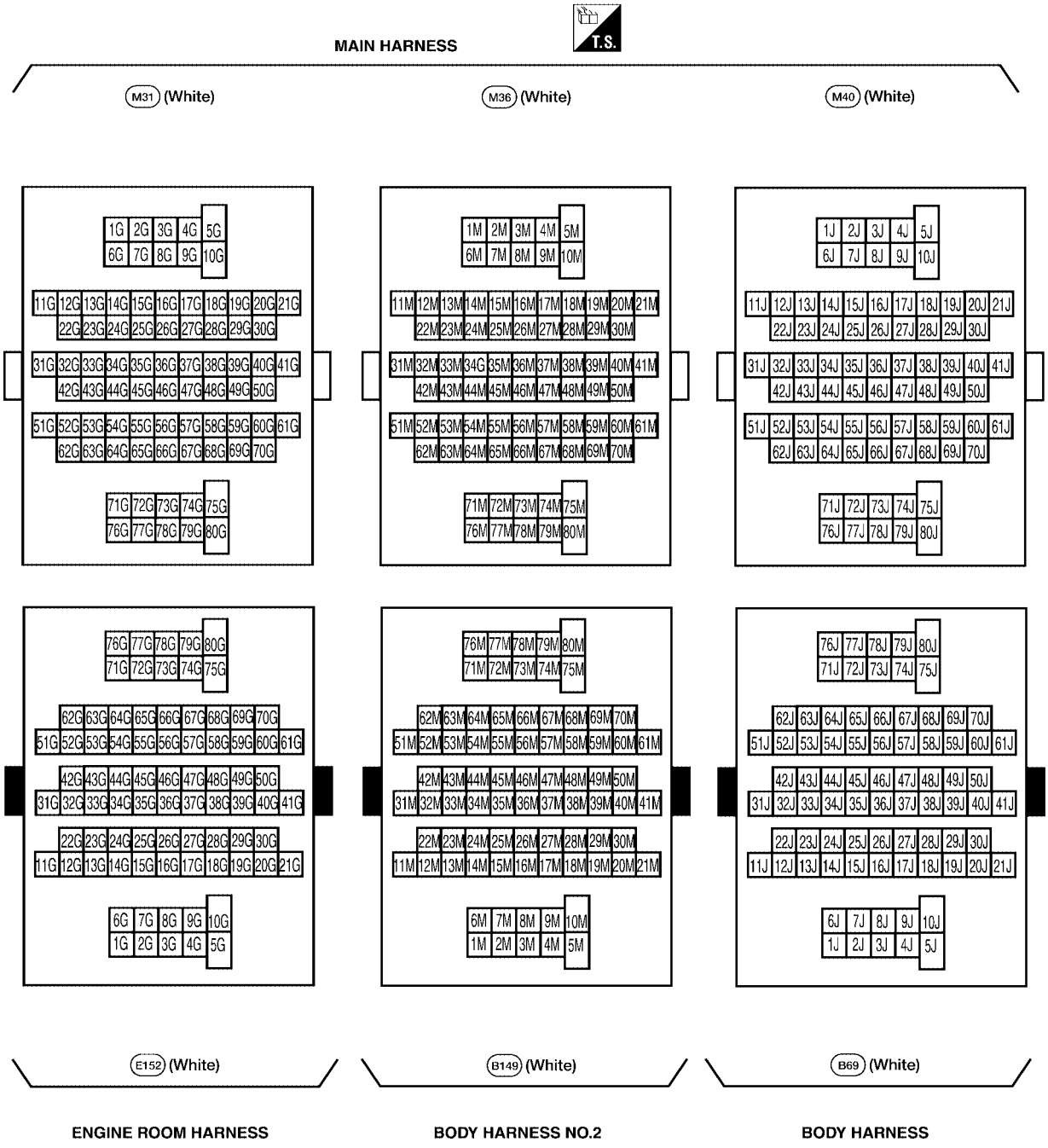

LKIA0385E

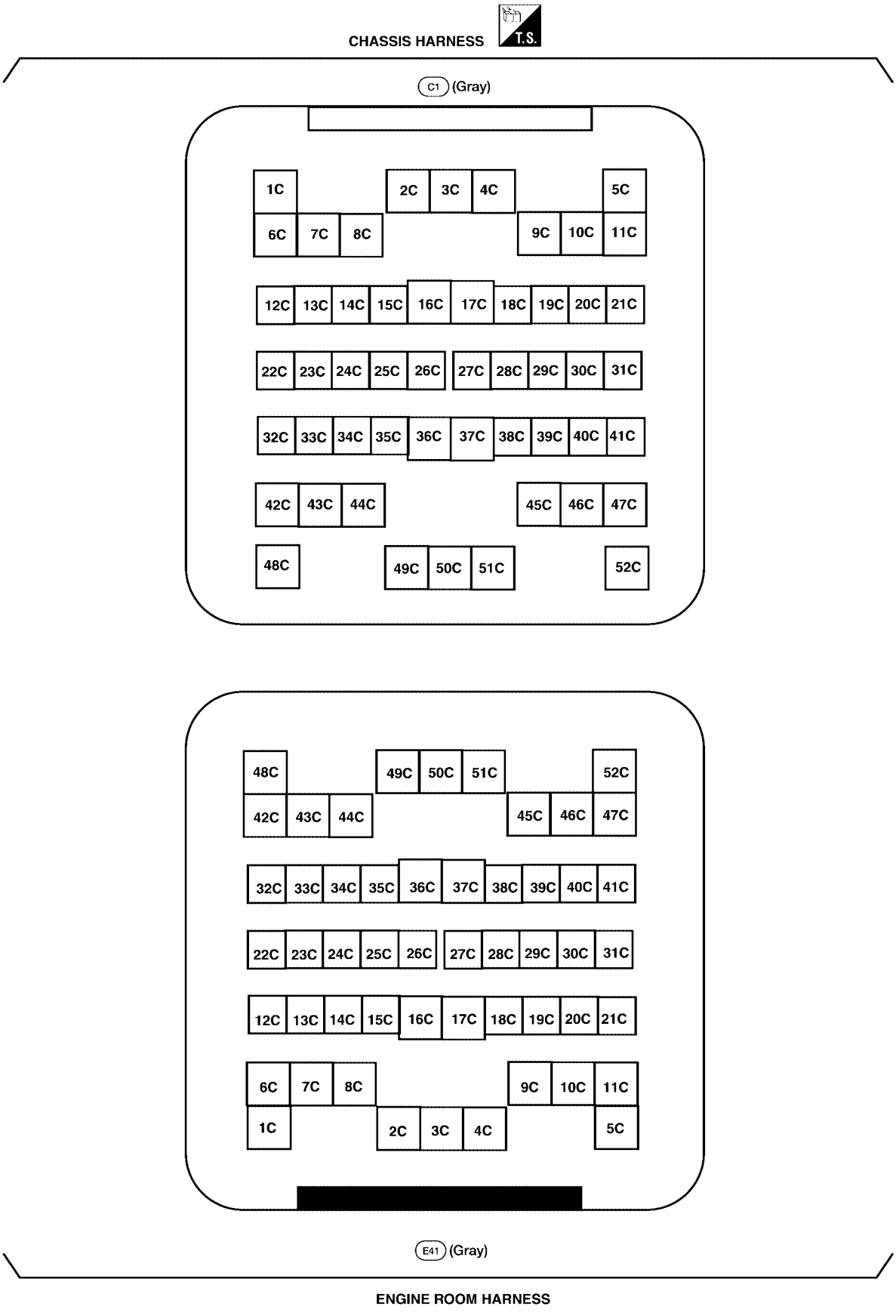
CHASSIS HARNESS
T.S.
C1 (Gray)
1C
2C
3C
4C
5C
6C
7C
8C
9C
10C
11C
12C
13C
14C
15C
16C
17C
18C
19C
20C
21C
22C
23C
24C
25C
26C
27C
28C
29C
30C
31C
32C
33C
34C
35C
36C
37C
38C
39C
40C
41C
42C
43C
44C
45C
46C
47C
48C
49C
50C
51C
52C
48C
49C
50C
51C
52C
42C
43C
44C
45C
46C
47C
32C
33C
34C
35C
36C
37C
38C
39C
40C
41C
22C
23C
24C
25C
26C
27C
28C
29C
30C
31C
12C
13C
14C
15C
16C
17C
18C
19C
20C
21C
6C
7C
8C
9C
10C
11C
1C
2C
3C
4C
5C
E41 (Gray)
ENGINE ROOM HARNESS

WKIA1845E

FUSE BLOCK-JUNCTION BOX(J/B)

PFP:24350

Terminal Arrangement

EKS007QZ

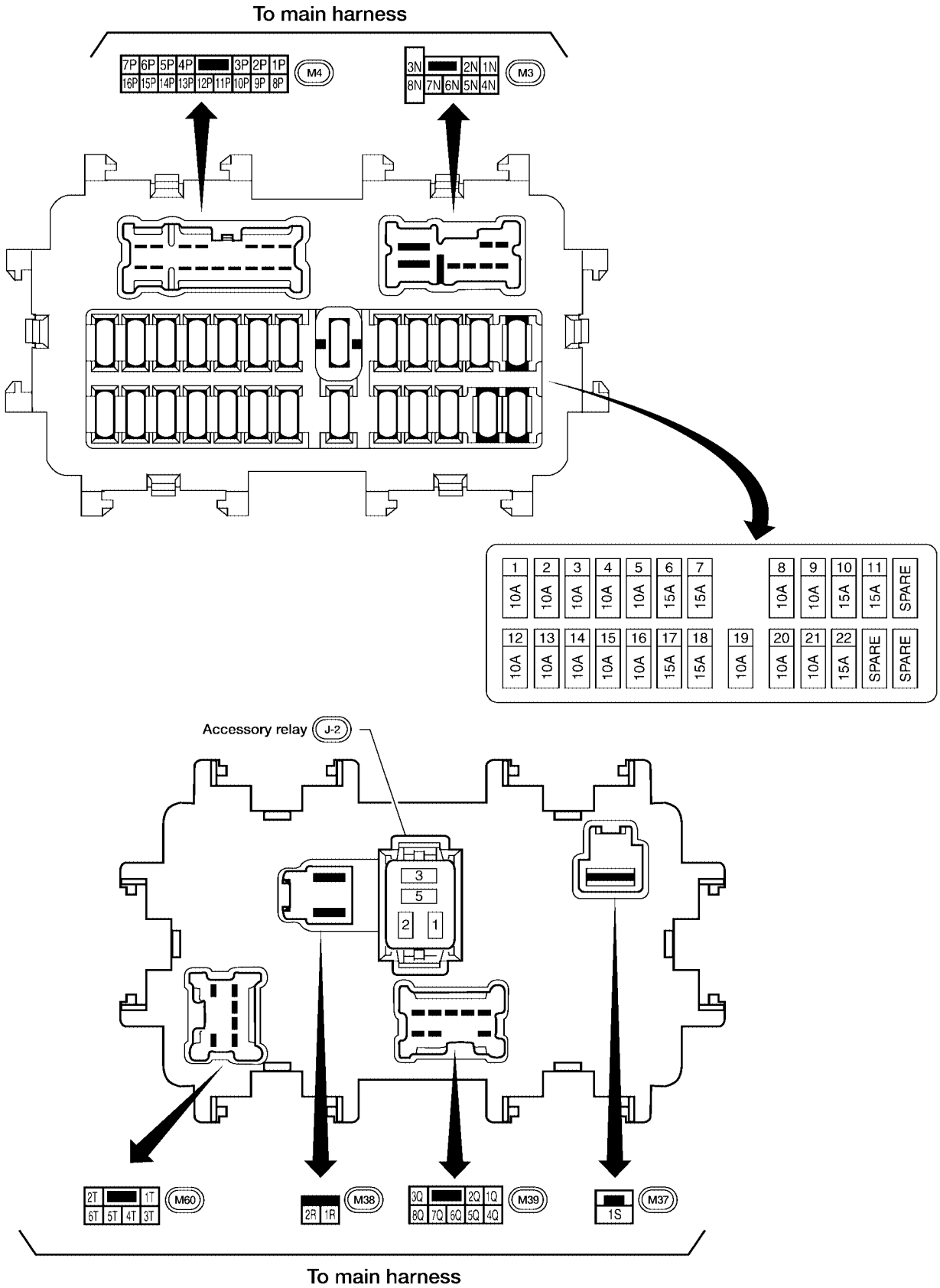

WKIA1706E

FUSE AND FUSIBLE LINK BOX

PFP:24381

Terminal Arrangement

EKS007R0

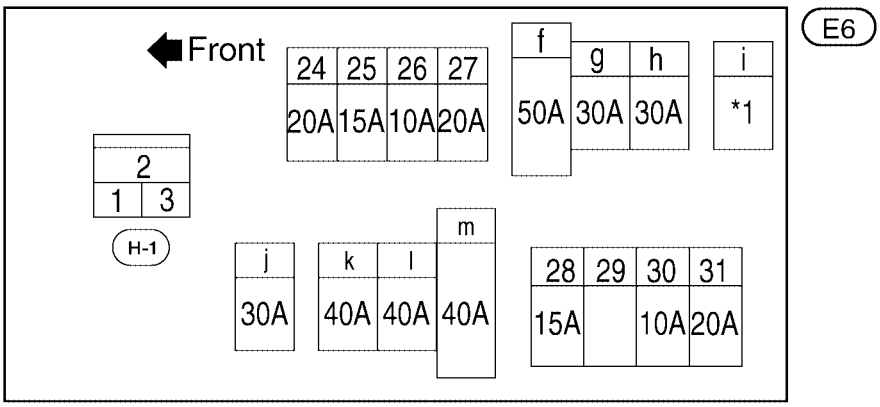

24 - 31: FUSE f - m: FUSIBLE LINK

*1 40A with VDC
30A without VDC

WKIA2869E

FUSE AND RELAY BOX

PFP:24012

Terminal Arrangement

EKS007R1

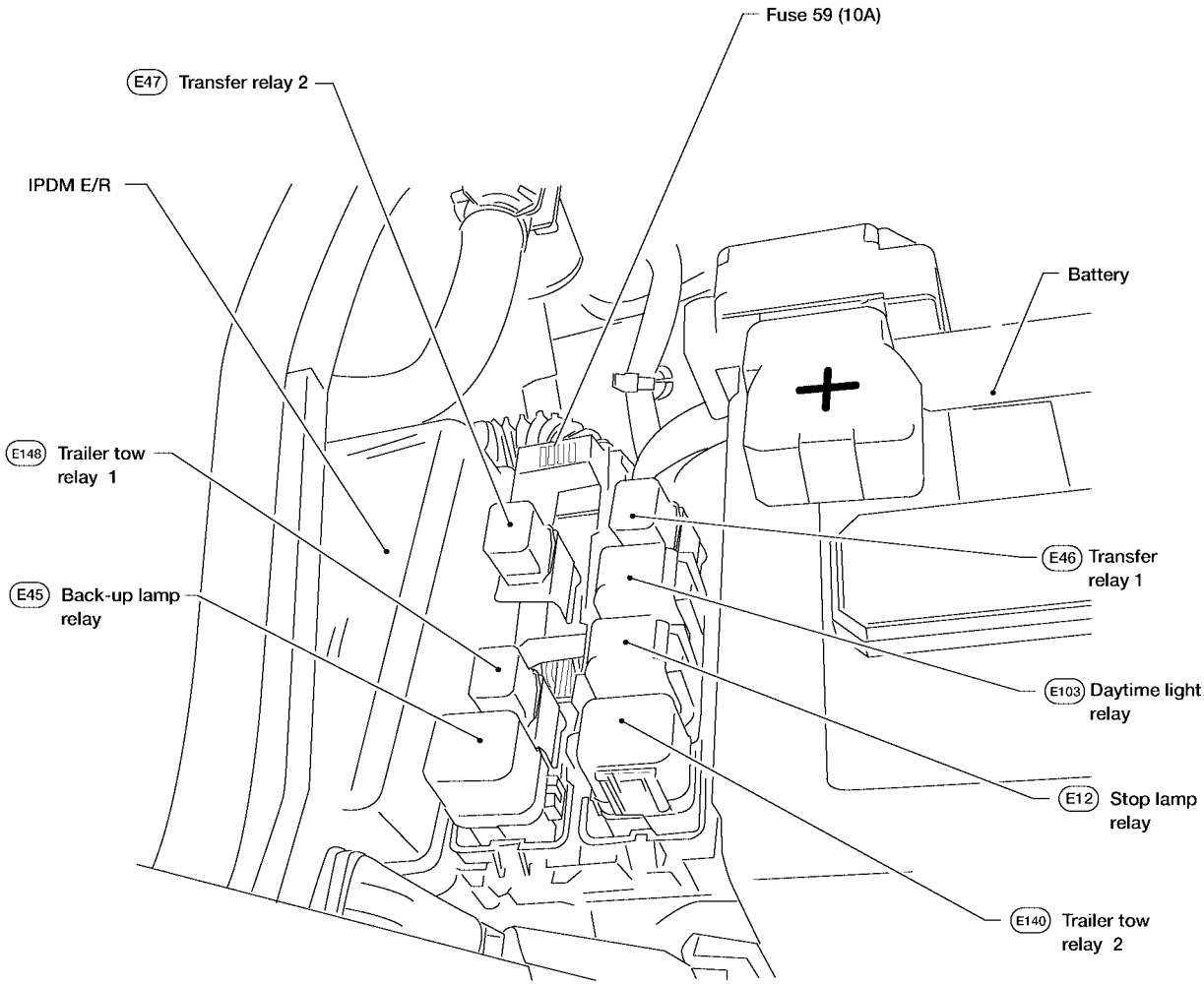

WKIA2870E