FRONT & REAR SUSPENSION

SECTION SU

GI
MA
EM
LC
EC
FE
AT
AX
SU
BR
ST
RS
BT
HA
SC
EL
IDX

CONTENTS

FRONT SUSPENSION 2
Precautions 2
PRECAUTIONS 2
Preparation 2
SPECIAL SERVICE TOOL 2
COMMERCIAL SERVICE TOOL 2
Noise, Vibration and Harshness (NVH) Troubleshooting 3
NVH TROUBLESHOOTING CHART 3
Components 4
On-vehicle Service 5
FRONT SUSPENSION PARTS 5
FRONT WHEEL ALIGNMENT 5
Coil Spring and Strut Assembly 8
COMPONENTS 8
REMOVAL AND INSTALLATION 9
DISASSEMBLY 9
INSPECTION 9
ASSEMBLY 10
Stabilizer Bar 10
REMOVAL AND INSTALLATION 10
INSPECTION 11
Transverse Link and Transverse Link Gusset 11
REMOVAL AND INSTALLATION 11
INSPECTION 11
Lower Ball Joint 11
REMOVAL AND INSTALLATION 11
INSPECTION 12
Service Data and Specifications (SDS) 12
GENERAL SPECIFICATIONS (FRONT) 12
FRONT WHEEL ALIGNMENT (UNLADEN*1) 13
LOWER BALL JOINT 13
WHEELARCH HEIGHT (UNLADEN*) 14
WHEEL RUNOUT 14
REAR SUSPENSION 15
Precautions 15
PRECAUTIONS 15
Preparation 15
COMMERCIAL SERVICE TOOL 15
Noise, Vibration and Harshness (NVH) Troubleshooting 15
Components 16
On-vehicle Service 16
REAR SUSPENSION PARTS 16
REAR WHEEL ALIGNMENT 17
Removal and Installation 19
Leaf Spring 20
COMPONENTS 20
REMOVAL 20
INSPECTION 21
INSTALLATION 22
Shock Absorber 23
REMOVAL AND INSTALLATION 23
INSPECTION 23
Stabilizer Bar 23
REMOVAL AND INSTALLATION 23
INSPECTION 24
Service Data and Specifications (SDS) 24
GENERAL SPECIFICATIONS (REAR) 24
REAR WHEEL ALIGNMENT (UNLADEN*1) 25
WHEELARCH HEIGHT (UNLADEN*) 25
WHEEL RUNOUT 25

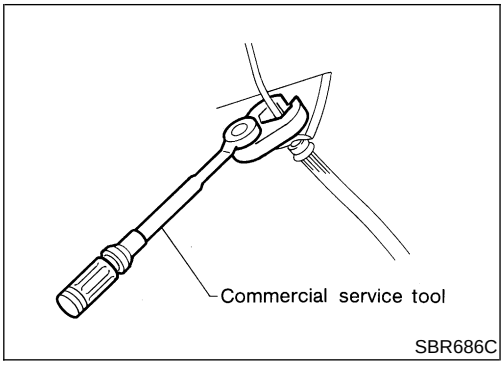

Precautions

PRECAUTIONS

NDSU0001

- **When installing rubber parts, final tightening must be carried out under unladen condition* with tires on ground.**
  ***:Fuel, radiator coolant and engine oil full. Spare tire, jack, hand tools and mats in designated positions.**
- **After installing removed suspension parts, check wheel alignment and adjust if necessary.**
- **Use flare nut wrench when removing or installing brake tubes.**
- **Always torque brake lines when installing.**

Preparation

SPECIAL SERVICE TOOL

NDSU0002

The actual shapes of Kent-Moore tools may differ from those of special service tools illustrated here.

Tool number (Kent-Moore No.) Tool name	Description	
HT72520000 (J25730-B) Ball joint remover	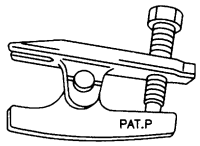 NT146	Removing tie-rod outer end and lower ball joint

COMMERCIAL SERVICE TOOL

NDSU0003

Tool name	Description	
Attachment Wheel alignment	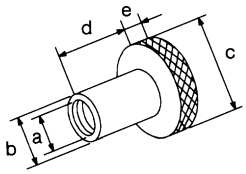 NT148	Measuring wheel alignment **a: Screw M22 x 1.5** **b: 35 (1.38) dia.** **c: 65 (2.56) dia.** **d: 56 (2.20)** **e: 12 (0.47)** Unit: mm (in)
1 Flare nut crowfoot 2 Torque wrench	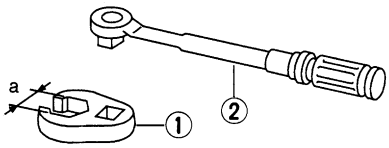 NT360	Removing and installing brake piping **a: 10 mm (0.39 in)**
Spring compressor	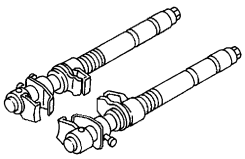 NT717	Removing and installing coil spring

Noise, Vibration and Harshness (NVH) Troubleshooting

=NDSU0004

NVH TROUBLESHOOTING CHART

NDSU0004S01

Use the chart below to help you find the cause of the symptom. If necessary, repair or replace these parts.

		Reference page	SU-4, 16	SU-8, 23	—	—	—	SU-8, 20	SU-5	SU-10, 23	SU-6	—	—	—	—	—	—	NVH in ***AX-3*** and ***AX-18***	NVH in ***AX-3*** and ***AX-18***	Refer to SUSPENSION in this chart.	Refer to TIRES in this chart.	Refer to ROAD WHEEL in this chart.	NVH in ***BR-5***	NVH in ***ST-5***
		Possible Cause and SUSPECTED PARTS	Improper installation, looseness	Strut or shock absorber deformation, damage or deflection	Bushing or mounting deterioration	Parts interference	Spring fatigue	Suspension looseness	Incorrect wheel alignment	Stabilizer bar fatigue	Out-of-round	Imbalance	Incorrect air pressure	Uneven tire wear	Deformation or damage	Non-uniformity	Incorrect tire size	DRIVE SHAFT	AXLE	SUSPENSION	TIRES	ROAD WHEEL	BRAKES	STEERING
Symptom	SUSPENSION	Noise	×	×	×	×	×	×										×	×		×	×	×	×
		Shake	×	×	×	×		×										×	×		×	×	×	×
		Vibration	×	×	×	×	×											×	×		×			×
		Shimmy	×	×	×	×			×										×		×	×	×	×
		Judder	×	×	×														×		×	×	×	×
		Poor quality ride or handling	×	×	×	×	×		×	×									×		×	×		
	TIRES	Noise	×								×	×	×	×	×	×		×	×	×		×	×	×
		Shake	×								×	×	×	×	×		×	×	×	×		×	×	×
		Vibration											×				×	×	×	×				×
		Shimmy	×								×	×	×	×	×	×	×		×	×		×	×	×
		Judder	×								×	×	×	×	×		×		×	×		×	×	×
		Poor quality ride or handling	×								×	×	×	×	×		×		×	×		×		
	ROAD WHEEL	Noise	×								×	×			×			×	×	×	×		×	×
		Shake	×								×	×			×			×	×	×	×		×	×
		Shimmy, Judder	×								×	×			×				×	×	×		×	×
		Poor quality ride or handling	×								×	×			×				×	×	×			

×: Applicable

Components

NDSU0005

SEC. 391•400•401

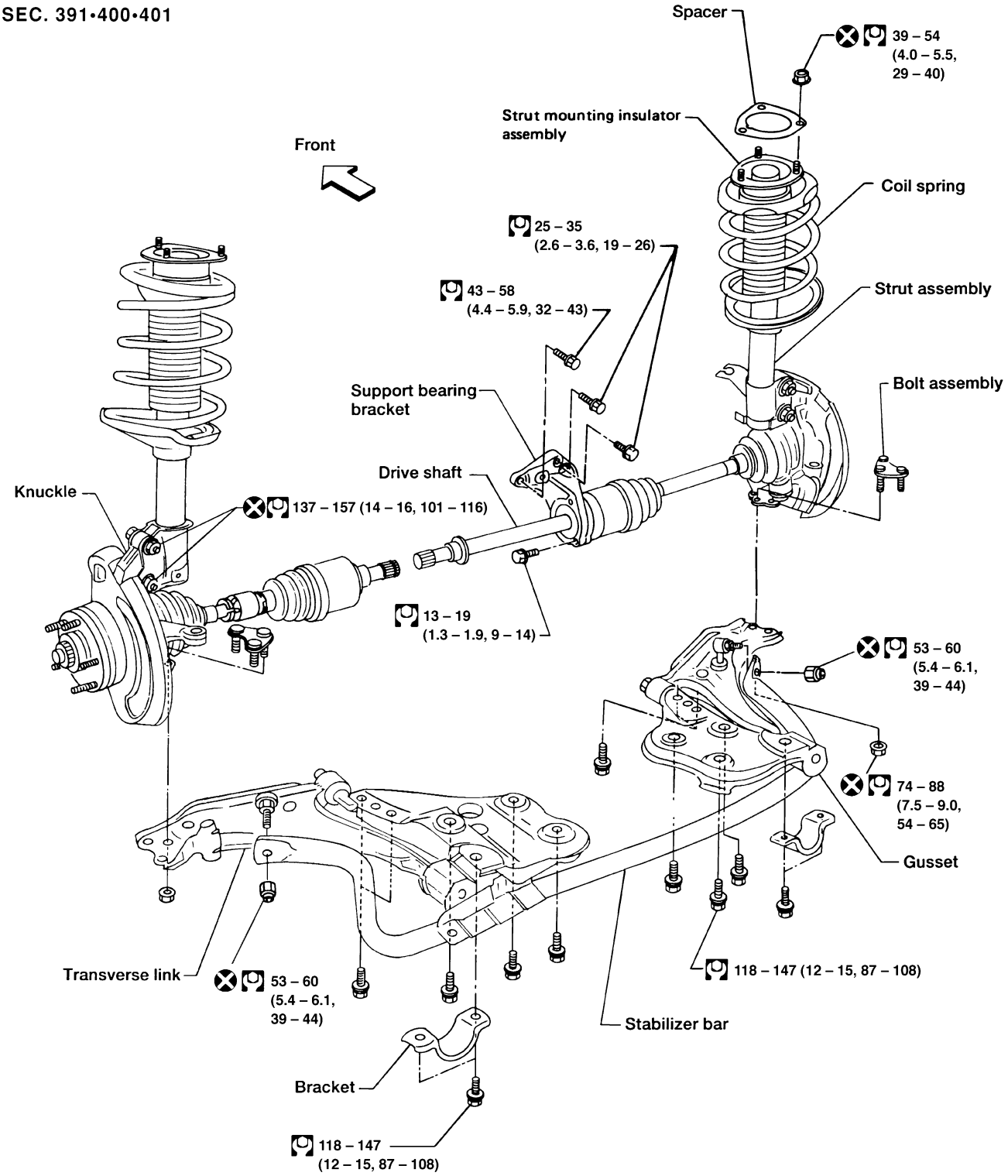

When installing rubber parts, final tightening must be carried out under unladen condition* with tires on ground.

*: Fuel, radiator coolant and engine oil full. Spare tire, jack, hand tools and mats in designated positions.

: N·m (kg-m, ft-lb)

ASU016

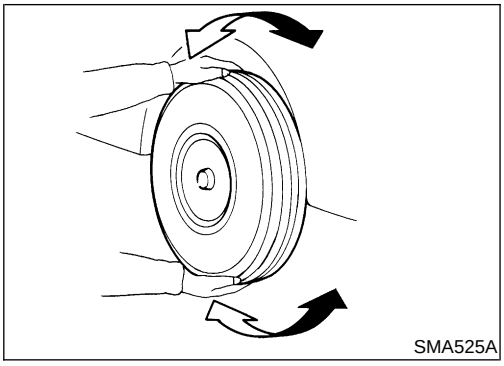
SMA525A

On-vehicle Service

FRONT SUSPENSION PARTS

NDSU0006

Check front axle and front suspension parts for excessive play, cracks, wear and other damage.

- Shake each front wheel to check for excessive play.
- Make sure that the cotter pin is inserted.
- Retighten all nuts and bolts to the specified torque.

Tightening torque:
Refer to SU-8.

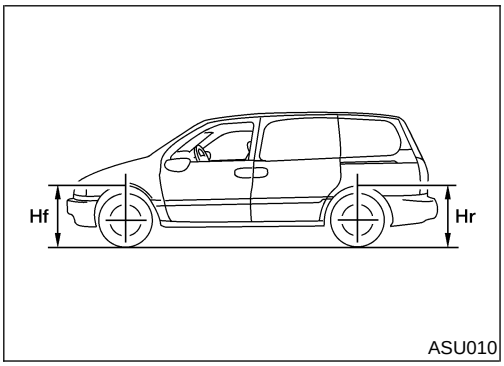

ASU010

- Check spring height from top of wheelarch to ground using the following procedure.

a) Park vehicle on a level surface with vehicle unladen*.
*:Fuel, radiator coolant and engine oil full. Spare tire, jack, hand tools and mats in designated positions.

b) Check tires for proper inflation and wear (tread wear indicator must not be showing).

c) Bounce vehicle up and down several times and measure dimensions Hf and Hr. Refer to SDS, SU-14.
Spring height is not adjustable. If out of specification, check for worn springs or suspension parts.

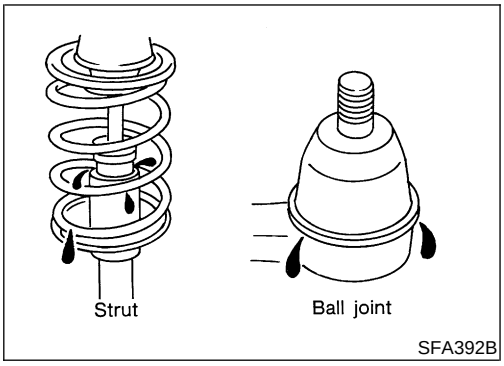

SFA392B

- Check strut for oil leakage and other damage.
- Check suspension ball joint for grease leakage and ball joint dust cover for cracks and other damage.
If ball joint dust cover is cracked or damaged, replace ball joint assembly.

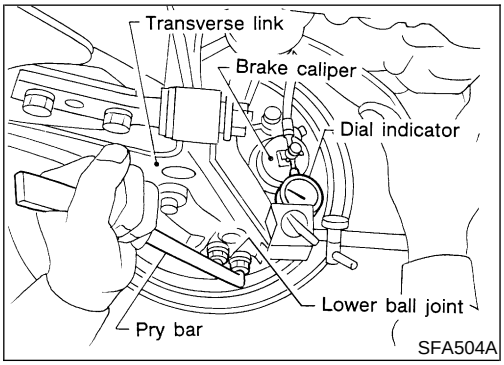

SFA504A

- Check suspension ball joint end play.

a) Jack up front of vehicle and set the stands.

b) Clamp dial indicator onto transverse link and place indicator tip on lower edge of brake caliper.

c) Make sure front wheels are straight and brake pedal is depressed.

d) Place a pry bar between transverse link and inner rim of road wheel.

e) While raising and releasing pry bar, observe maximum dial indicator value.

Vertical end play:
0 mm (0 in)

If ball joint vertical end play exists, replace ball joint and recheck vertical end play.

FRONT WHEEL ALIGNMENT

NDSU0007

Before checking front wheel alignment, be sure to make a preliminary inspection with vehicle unladen*.
*: Fuel, radiator coolant and engine oil full. Spare tire, jack, hand tools and mats in designated positions.

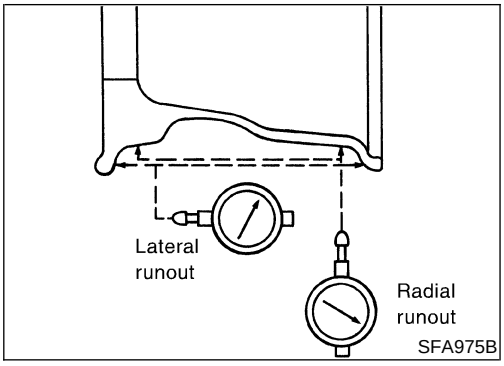

Preliminary Inspection

NDSU0007S01

Aluminum Wheels

NDSU0007S0101

1. Check tires for wear and improper inflation.
2. Check wheels for deformation, cracks and other damage
   If deformed, remove wheel and check runout.

   Wheel runout:

   Radial runout limit 0.3 mm (0.012 in)

   Lateral runout limit 0.3 mm (0.012 in)
3. Check front wheel bearings for looseness.
4. Check front suspension for looseness.
5. Check steering linkage for looseness.
6. Check that front struts work properly.
7. Check vehicle posture (unladen).

Steel Wheels

NDSU0007S0102

1. Remove tire from steel wheel and mount wheel on a tire balance machine.

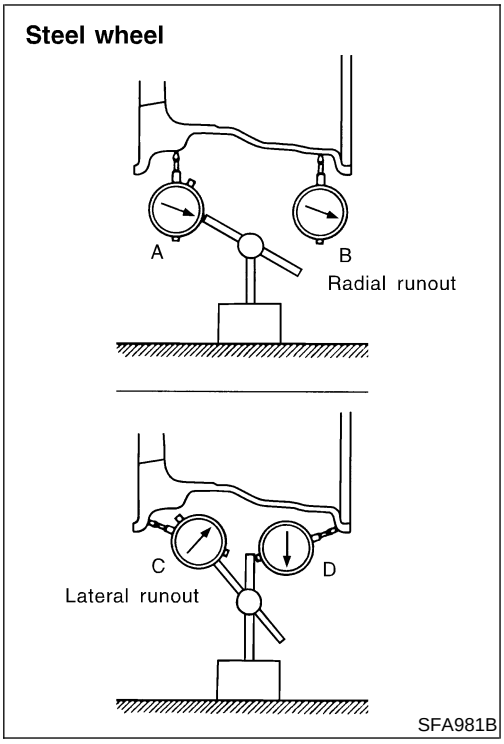

2. Set two dial indicators as shown in the illustration.
3. Set each dial indicator to zero.
4. Rotate wheel, and check dial indicators at several points around the circumference of the wheel.
5. Calculate runout at each point as shown below.
   Radial runout = (A+B)/2
   Lateral runout = (C+D)/2
6. Select maximum positive runout value and the maximum negative value.
   Add the two values to determine total runout.
   In case a positive or negative value is not available, use the maximum value (negative or positive) for total runout.

If the total runout value exceeds the limit, replace steel wheel.

If the total runout value exceeds the limit, replace steel wheel.

Radial runout limit 0.5 mm (0.020 in)

Lateral runout limit 0.8 mm (0.031 in)

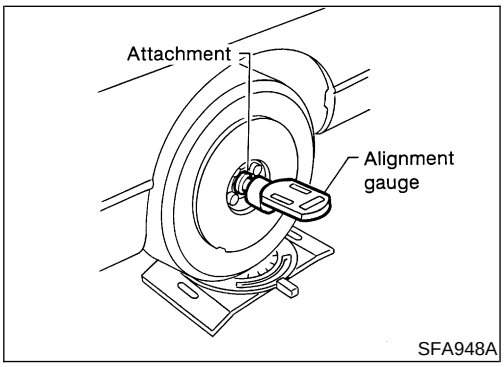

Camber, Caster and Kingpin Inclination

NDSU0007S02

Camber, caster and kingpin inclination are preset at factory and cannot be adjusted.

1. Measure camber, caster and kingpin inclination of both right and left wheels with a suitable alignment gauge.

   Camber, caster and kingpin inclination:

   Refer to SDS, SU-13.
2. If camber, caster and kingpin inclination are not within specification, inspect front suspension parts. Replace any damaged or worn out parts.

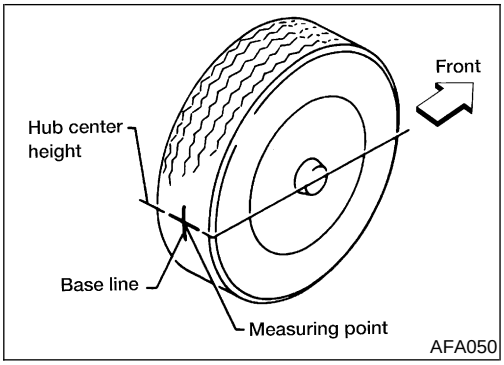

Toe-in

NDSU0007S03

Measure toe-in using the following procedure.

WARNING:

- **Always perform the following procedure on a flat surface.**
- **Make sure that no one is in front of the vehicle before pushing it.**

1. Bounce front of vehicle up and down to stabilize the posture.
2. Push the vehicle straight ahead about 5 m (16 ft).
3. Put a mark on base line of tread (rear side) of both front tires at the same height as hub center. These are measuring points.

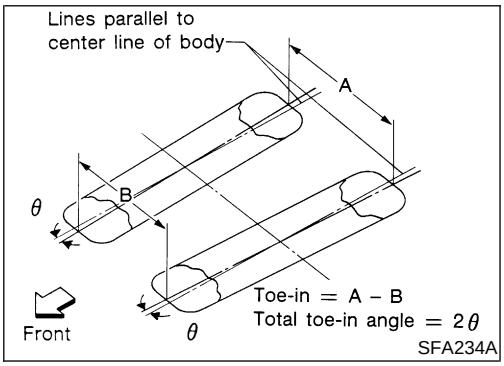

4. Measure distance "A" (rear side).
5. Push the vehicle slowly ahead to rotate the wheels 180 degrees (1/2 turn).
   - **If the wheels have rotated more than 180 degrees (1/2 turn), try the above procedure again from the beginning. Never push vehicle backward.**
6. Measure distance "B" (front side).

   Toe-in (A − B):

   Refer to SDS, SU-13.

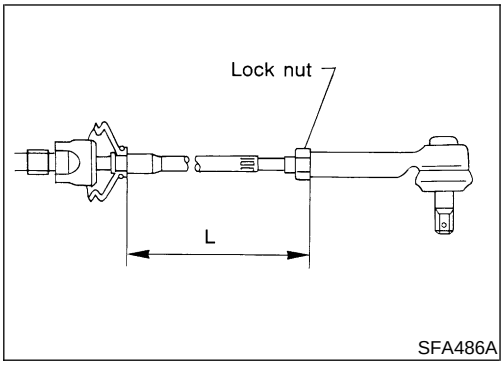

7. Adjust toe-in by varying the length of steering tie-rods.

a. Loosen lock nuts.

b. Adjust toe-in by screwing tie-rods in or out.

   Standard length "L":

   Refer to"General Specifications", *ST-24*.

c. Tighten lock nuts to specified torque.

   : 41 - 81 N·m (4.2 - 8.3 kg-m, 30 - 60 ft-lb)

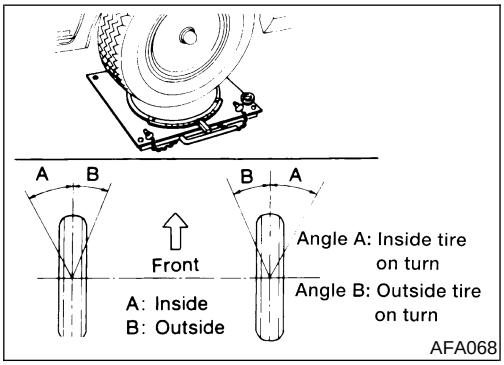

Front Wheel Turning Angle

NDSU0007S04

1. Set wheels in straight-ahead position. Then move vehicle forward until front wheels rest on turning radius gauge properly.
2. Rotate steering wheel all the way right and left; measure turning angle.

   Wheel turning angle (Full turn):

   Refer to SDS, SU-13.

Coil Spring and Strut Assembly

COMPONENTS

NDSU0008

SEC. 391-400-401

When installing rubber parts, final tightening must be carried out under unladen condition* with tires on ground.
*: Fuel, radiator coolant and engine oil full. Spare tire, jack, hand tools and mats in designated positions.

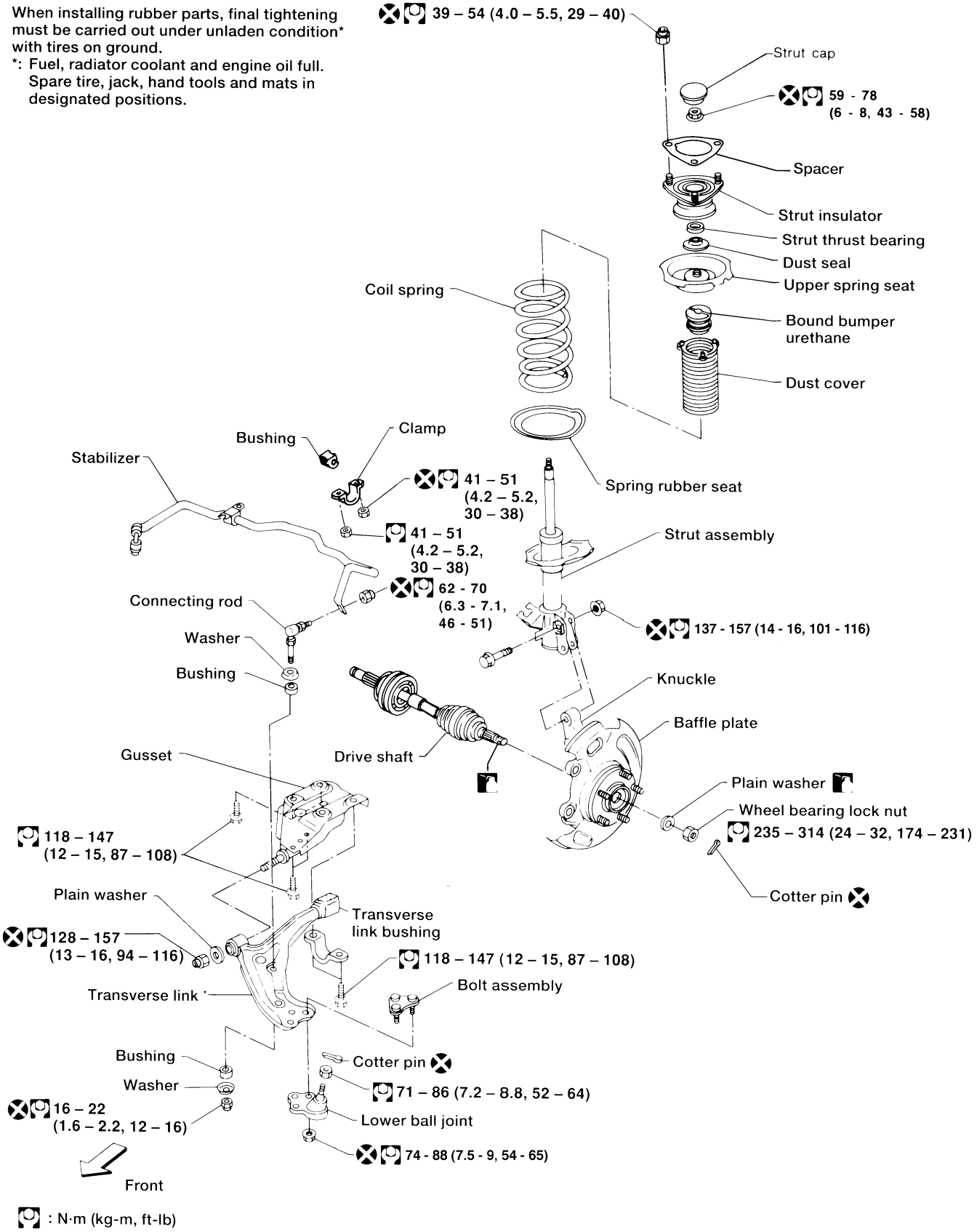

: N·m (kg-m, ft-lb)

ASU002

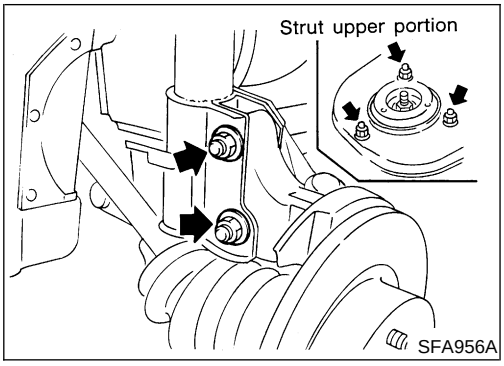

REMOVAL AND INSTALLATION

NDSU0009

- Remove strut assembly fixing bolts and nuts (to hood ledge).

WARNING:
Do not remove piston rod lock nut on vehicle.

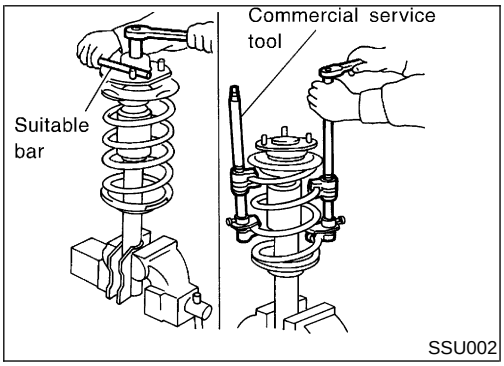

DISASSEMBLY

NDSU0010

1. Set strut assembly on vise, then **loosen** piston rod lock nut.

WARNING:
Do not remove piston rod lock nut at this time.

2. Compress spring with Tool so that the strut mounting insulator can be turned by hand.

WARNING:
Make sure that the pawls of the two spring compressors are firmly hooked on the spring. The spring compressors must be tightened alternately so as not to tilt the spring.

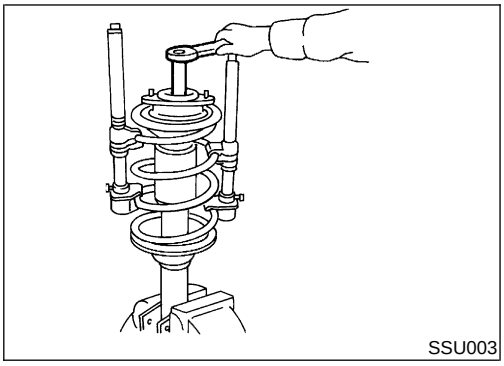

3. Remove piston rod lock nut.

INSPECTION

NDSU0011

Strut Assembly

NDSU0011S01

- Check both compression and extension for smooth operation through a full stroke.
- Check for oil leakage occurring on welded or gland packing portion.
- Check piston rod for cracks, deformation and other damage.
- Replace if necessary.

Strut Mounting Insulator

NDSU0011S02

- Check cemented rubber-to-metal portion for separation and cracks.
- Check rubber parts for deterioration.

Thrust Bearing

NDSU0011S03

- Check thrust bearing parts for abnormal noise or excessive rattle in axial direction.
- Replace if necessary.

Coil Spring and Insulator

NDSU0011S04

- Check for cracks, deformation and other damage. Replace if necessary.

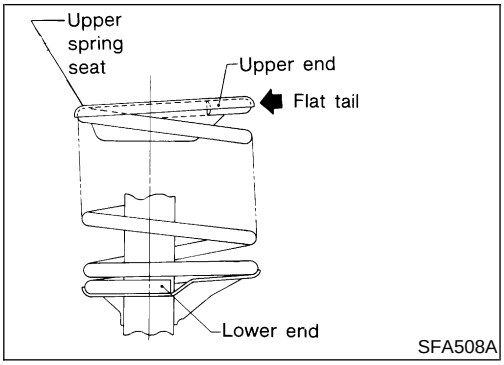

ASSEMBLY

NDSU0012

- When installing coil spring on strut, it must be positioned as shown in the figure at left.

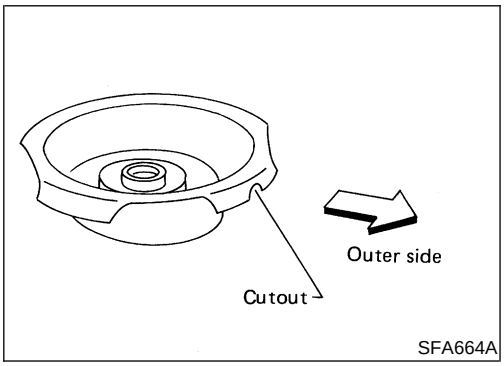

- Install upper spring seat with alignment mark facing outside of vehicle, in line with strut-to-knuckle attachment points (±3°).
- Replace strut lower mounting nuts.
- **When installing strut to knuckle, be sure to hold bolts and tighten nuts.**

  : 137 - 157 N·m (14.0 - 16.0 kg-m, 101 - 116 ft-lb)

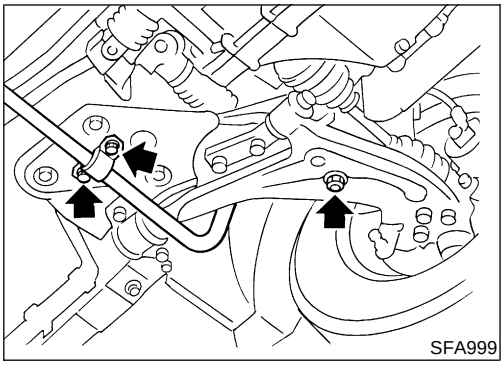

Stabilizer Bar

REMOVAL AND INSTALLATION

NDSU0013

- Remove stabilizer bar.

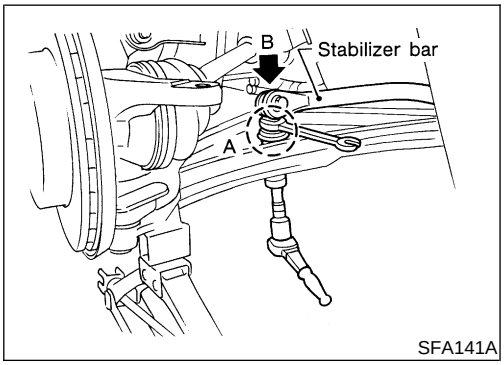

- When removing or installing stabilizer bar, secure portion A with wrench as shown.

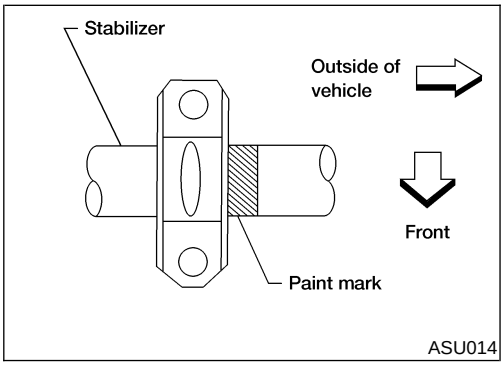

- When installing stabilizer, make sure that paint mark and clamp are in the correct positions.

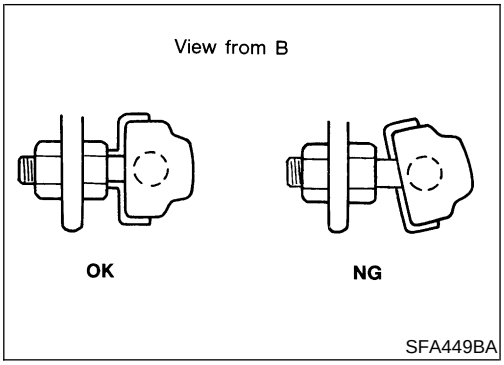

- Install stabilizer bar with ball joint socket properly placed.

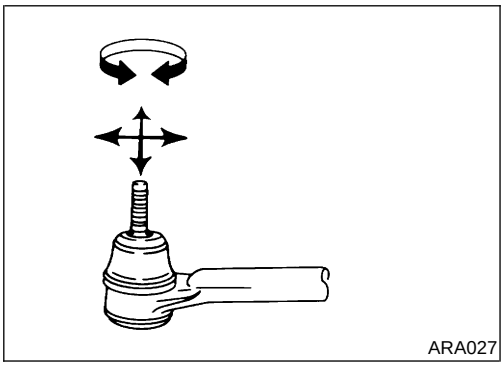

INSPECTION

NDSU0014

- Check stabilizer for deformation and cracks. Replace if necessary.
- Check rubber bushings for deterioration and cracks. Replace if necessary.
- Check that ball joint can rotate in all directions. If movement is not smooth and free, replace stabilizer bar link.

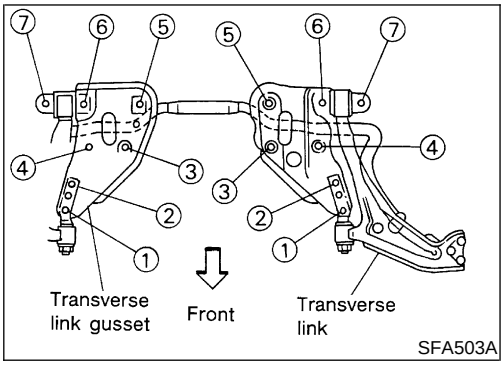

Transverse Link and Transverse Link Gusset

REMOVAL AND INSTALLATION

NDSU0015

1. Remove stabilizer bar.
2. Remove attaching bolts.
3. Install bolts in numerical order as shown at left.

- **During installation, final tightening must be carried out at curb weight with wheels on the ground.**

  : Refer to SU-8.

4. After installation, check wheel alignment. Refer to SU-5.

INSPECTION

NDSU0016

- Check transverse link for damage, cracks and deformation. Replace if necessary.
- Check rubber bushing for damage, cracks and deformation. Replace transverse link if necessary.
- Check transverse link gusset for damage, cracks and deformation. Replace if necessary.

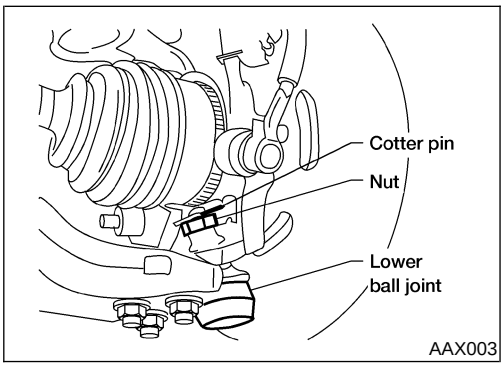

Lower Ball Joint

REMOVAL AND INSTALLATION

NDSU0017

1. Remove cotter pin and nut securing lower ball joint to knuckle.
2. Strike knuckle with a hammer and pull down control arm to separate lower ball joint from knuckle.

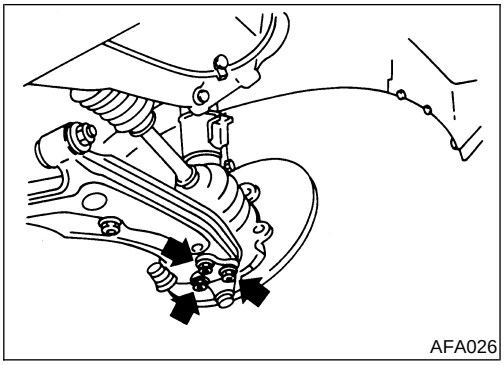
AFA026

3. Remove nuts shown at left.

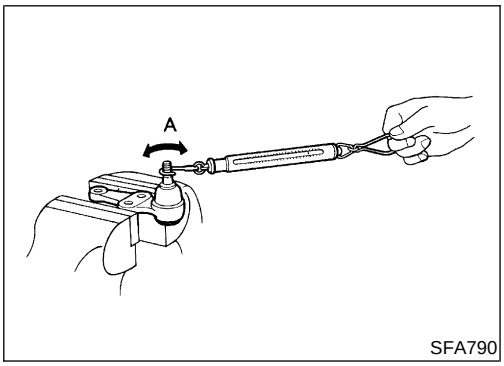

SFA790

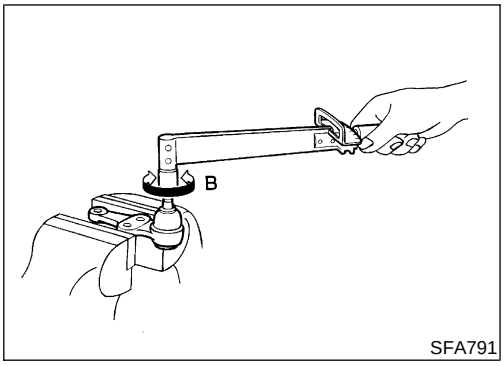

SFA791

INSPECTION

NDSU0018

- Check ball joint for excessive play. Replace lower ball joint if any of the following exists:
  - Ball stud is worn.
  - Joint is hard to swing.
  - Play in axial direction is excessive.

  Before checking, turn ball joint at least 10 revolutions so that ball joint is properly broken in.

  Swinging force "A":
  (measuring point: cotter pin hole of ball stud)
  7.8 - 51.0 N (0.8 - 5.2 kg, 1.8 - 11.5 lb)
  Turning torque "B":
  0.5 - 3.4 N·m (5 - 35 kg-cm, 4.3 - 30.4 in-lb)
  Vertical end play:
  0 mm (0 in)
- Check dust cover for damage. Replace dust cover and cover clamp if necessary.

Service Data and Specifications (SDS)

GENERAL SPECIFICATIONS (FRONT)

NDSU0019

Suspension type	Independent macpherson strut with coil spring
Strut type	Double-acting hydraulic
Stabilizer bar	Standard equipment

FRONT WHEEL ALIGNMENT (UNLADEN*1)

NDSU0022

Unit: Degree minute (Decimal degree)

Applied model			All	
Camber			Minimum	−27′ (−0.45°)
			Nominal	18′ (0.3°)
			Maximum	1°3′ (1.05°)
			Left and right difference	45′ (0.75°)
Caster			Minimum	3′ (0.05°)
			Nominal	48′ (0.8°)
			Maximum	1°33′ (1.55°)
			Left and right difference	45′ (0.75°)
Kingpin inclination			Minimum	12°50′ (12.83°)
			Nominal	13°35′ (13.58°)
			Maximum	14°20′ (14.33°)
Total toe-in	Distance (A - B)		Minimum	2 mm (0.08 in)
			Nominal	3 mm (0.12 in)
			Maximum	4 mm (0.16 in)
	Angle (left plus right)		Minimum	11′ (0.28°)
			Nominal	16′30″ (0.28°)
			Maximum	22′ (0.37°)
Wheel turning angle	Full turn*2	Inside	Minimum	36° (36.00°)
			Nominal	38° (38.00°)
			Maximum	40° (40.00°)
		Outside	Minimum	28° (28.00°)
			Nominal	30° (30.00°)
			Maximum	32° (32.00°)

*1: Fuel, radiator coolant and engine oil full. Spare tire, jack, hand tools and mats in designated positions.
*2: Wheel turning force (at circumference of steering wheel) of 98 to 147 N (10 to 15 kg, 22 to 33 lb) with engine idle.

LOWER BALL JOINT

NDSU0023

Swinging force (Measured at cotter pin hole)	7.8 - 51.0 N (0.8 - 5.2 kg, 1.8 - 11.5 lb)
Turning torque	0.5 - 3.4 N·m (5 - 35 kg-cm, 4.3 - 30.4 in-lb)
Vertical end play limit	0 mm (0 in)

WHEELARCH HEIGHT (UNLADEN*)

NDSU0024

Unit: mm (in)

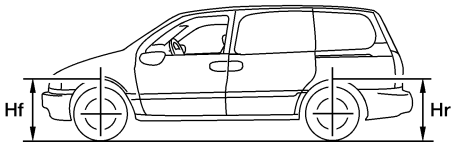

ASU010

Applied model		All
Front (Hf)	Standard/Optional suspension	772 ± 10 (30.39 ± 0.39)
Rear (Hr)	Standard/Optional suspension	793 ± 10 (31.22 ± 0.39)

*: Fuel, radiator coolant and engine oil full. Spare tire, jack, hand tools and mats in designated positions.

WHEEL RUNOUT

NDSU0025

Unit: mm (in)

Wheel type	Aluminum wheel	Steel wheel
Maximum radial runout limit	0.3 (0.012)	0.5 (0.020)
Maximum lateral runout limit	0.3 (0.012)	0.8 (0.031)

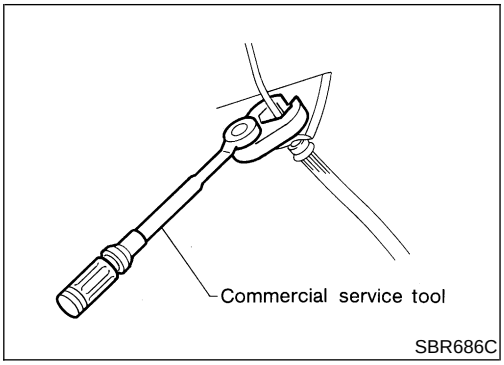

Precautions

PRECAUTIONS

NDSU0026

- **When installing rubber parts, final tightening must be carried out under unladen condition* with tires on ground.**
  ***:Fuel, radiator coolant and engine oil full. Spare tire, jack, hand tools and mats in designated positions.**
- **After installing removed suspension parts, check wheel alignment and adjust if necessary.**
- **Use flare nut wrench when removing or installing brake tubes.**
- **Always torque brake lines when installing.**

Preparation

COMMERCIAL SERVICE TOOL

NDSU0027

Tool name	Description	
1 Flare nut crowfoot 2 Torque wrench	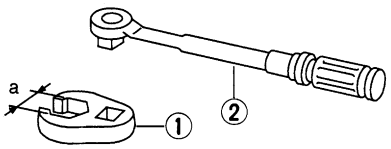 NT360	Removing and installing brake piping **a: 10 mm (0.39 in)**

Noise, Vibration and Harshness (NVH) Troubleshooting

NDSU0028

Refer to “Noise, Vibration and Harshness (NVH) Troubleshooting”, “FRONT SUSPENSION”, SU-3.

Components

NDSU0029

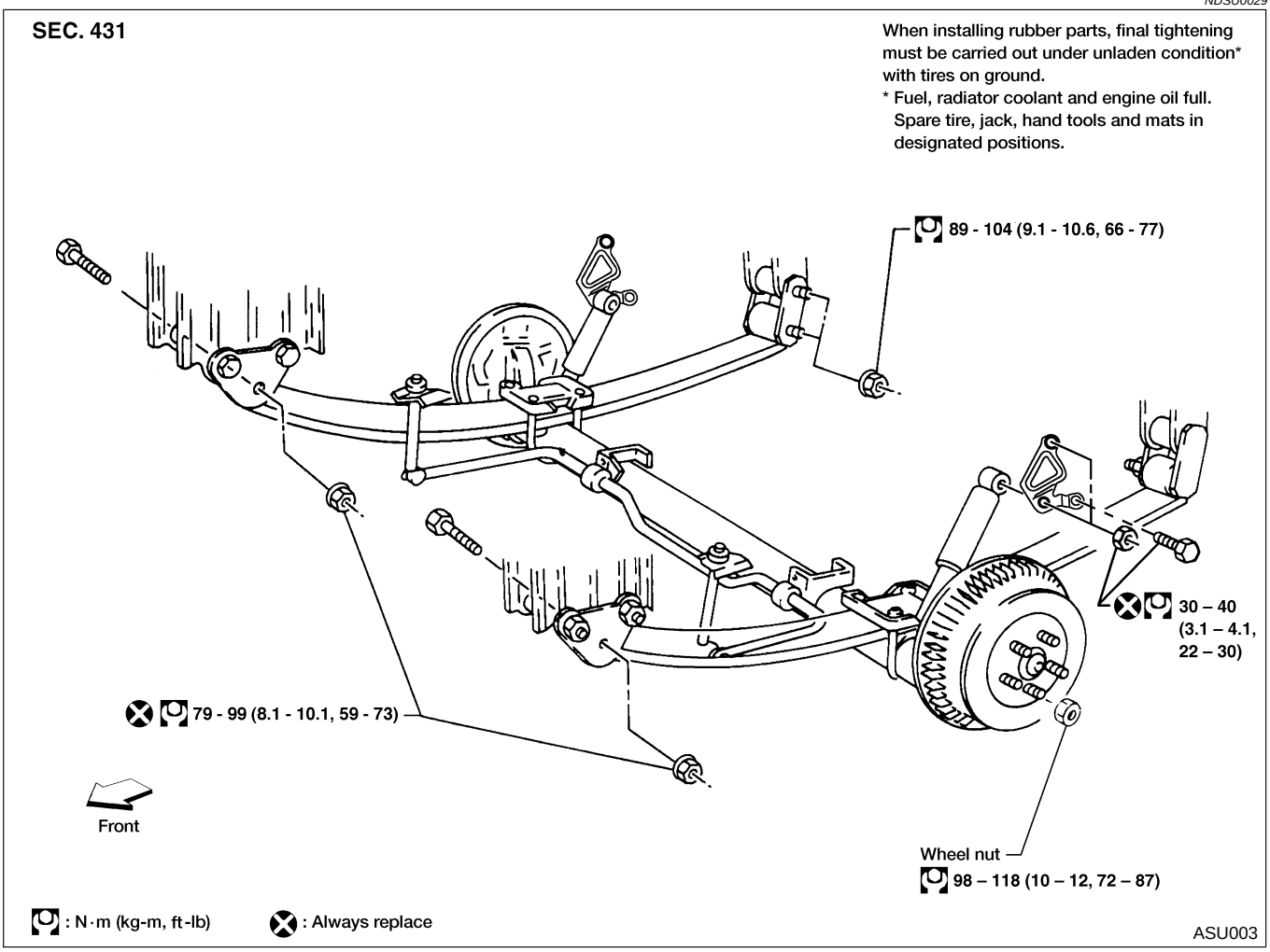

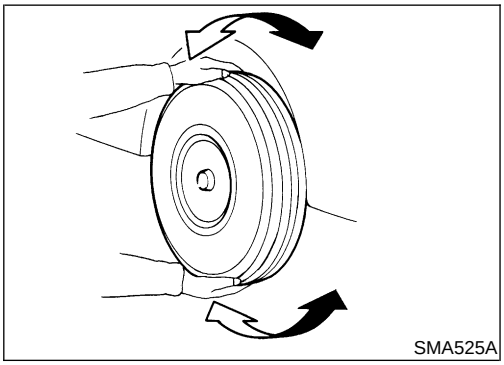

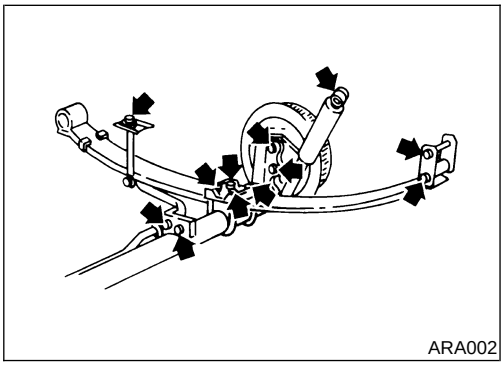

On-vehicle Service

REAR SUSPENSION PARTS

NDSU0030

Check axle and suspension parts for excessive play, wear or damage.

- Shake each rear wheel to check for excessive play.

- Retighten all nuts and bolts to the specified torque.

  Tightening torque:

  Refer to SU-20.

- Make sure that all cotter pins are inserted.

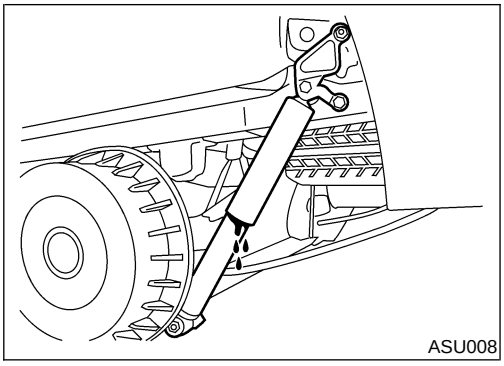

- Check shock absorber for oil leakage and damage.
- Check shock absorber bushing for damage and excessive wear.
- Check wheelarch height. Refer to SU-5 ("Front Suspension Parts", "ON-VEHICLE SERVICE").

REAR WHEEL ALIGNMENT

NDSU0031

Preliminary Inspection

NDSU0031S01

Before checking rear wheel alignment, be sure to make a preliminary inspection (unladen*).

*: Fuel, radiator coolant and engine oil. Spare tire, jack, hand tools and mats in designated positions.

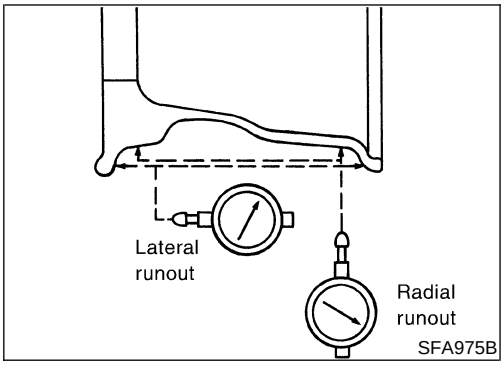

Aluminum Wheels

NDSU0031S0101

1. Check tires for wear and improper inflation.
2. Check wheels for deformation, cracks and other damage
   If deformed, remove wheel and check runout.
   Wheel runout:
   Radial runout limit 0.3 mm (0.012 in)
   Lateral runout limit 0.3 mm (0.012 in)
3. Check rear wheel bearings for looseness.
4. Check rear suspension for looseness.
5. Check that rear shocks work properly.
6. Check vehicle posture (unladen).

Steel Wheels

NDSU0031S0102

1. Remove tire from steel wheel and mount wheel on a tire balance machine.

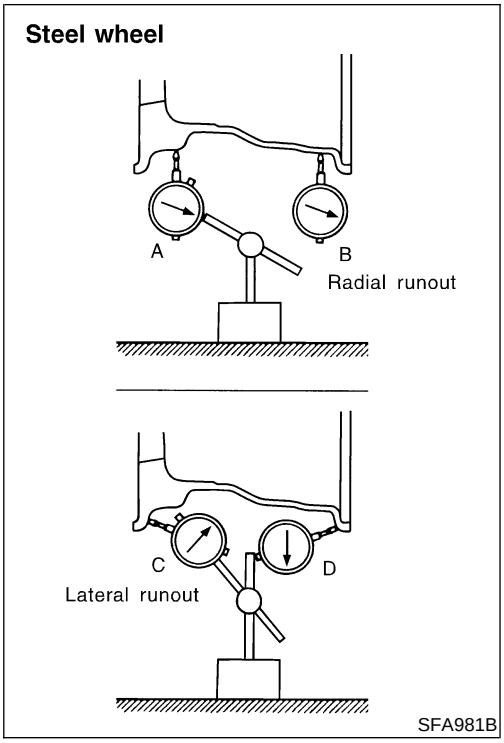

2. Set two dial indicators as shown in the illustration.
3. Set each dial indicator to zero.
4. Rotate wheel, and check dial indicators at several points around the circumference of the wheel.
5. Calculate runout at each point as shown below.
   Radial runout = (A+B)/2
   Lateral runout = (C+D)/2
6. Select maximum positive runout value and the maximum negative value.
   Add the two values to determine total runout.
   In case a positive or negative value is not available, use the maximum value (negative or positive) for total runout.

If the total runout value exceeds the limit, replace steel wheel.

If the total runout value exceeds the limit, replace steel wheel.

Radial runout limit 0.5 mm (0.020 in)
Lateral runout limit 0.8 mm (0.031 in)

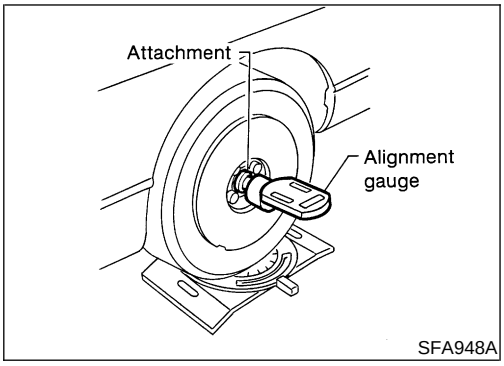

Camber

NDSU0031S02

Camber is preset at factory and cannot be adjusted.

Camber:

Refer to SDS, SU-25.

- If the camber is not within specification, inspect and replace any damaged or worn rear suspension parts.

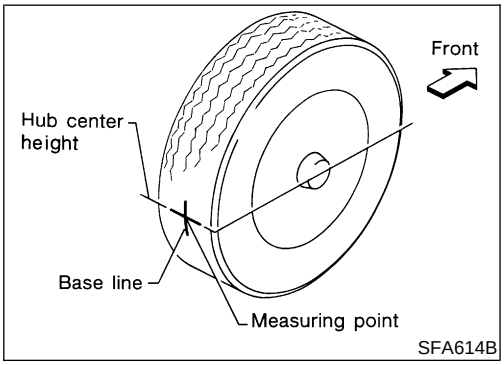

Toe-in

NDSU0031S03

Toe-in is preset at factory and cannot be adjusted. Measure toe-in using the following procedure. If out of specification, inspect and replace any damaged or worn rear suspension parts.

WARNING:

- **Always perform the following procedure on a flat surface.**
- **Make sure that no one is in front of the vehicle before pushing it.**

1. Bounce rear of vehicle up and down to stabilize the posture.
2. Push the vehicle straight ahead about 5 m (16 ft).
3. Put a mark on base line of the tread (rear side) of both rear tires at the same height as hub center. This mark is a measuring point.
4. Measure distance "A" (rear side).
5. Push the vehicle slowly ahead to rotate the wheels 180 degrees (1/2 turn).
   - **If the wheels have rotated more than 180 degrees (1/2 turn), try the above procedure again from the beginning. Never push vehicle backward.**
6. Measure distance "B" (front side).

Total toe-in: Refer to SDS, SU-25.

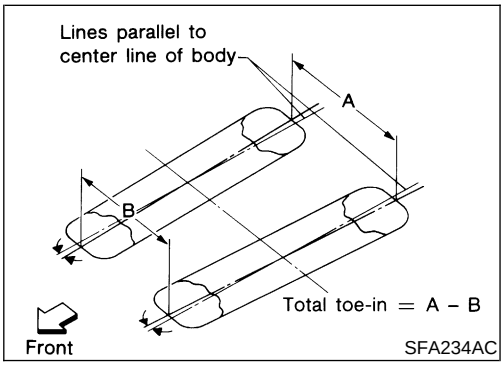

Removal and Installation

NDSU0032

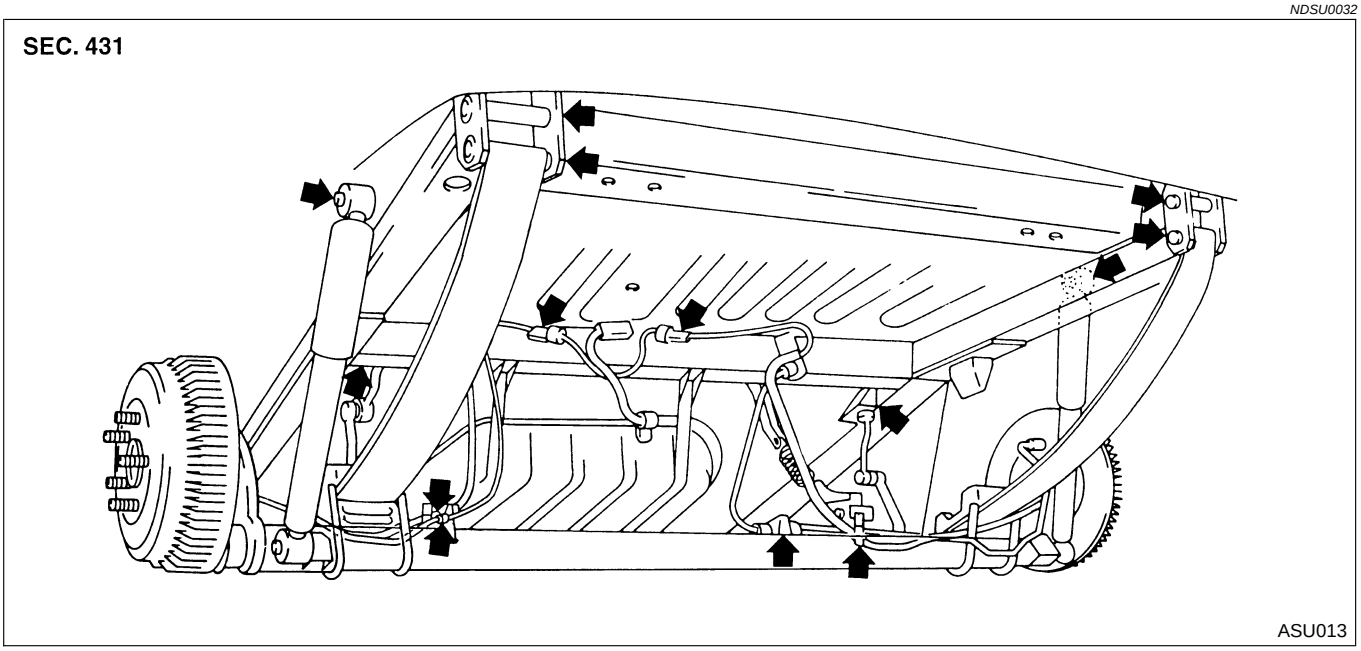

CAUTION:

- **Before removing the rear suspension assembly, disconnect the ABS wheel sensors from the assembly. Failure to do so may result in damaged sensor wires and the sensor becoming inoperative.**
- **Drain brake fluid before disconnecting brake lines.**

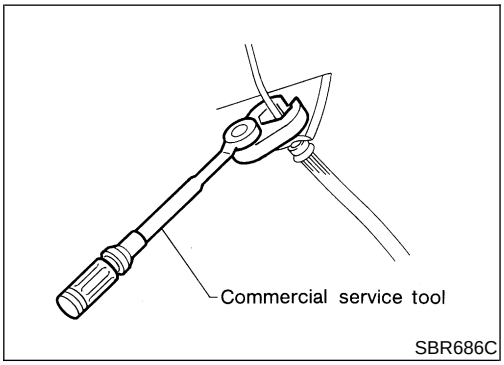

1. Support axle and suspension components with a suitable jack and block.
2. Disconnect brake hydraulic lines at axle and parking brake cables at back plates.
3. Disconnect ABS wheel sensors from the assembly.
4. Remove LSV spring bracket.
5. Remove upper end nuts and bolt of shock absorbers.
6. Remove stabilizer bar from body.
7. Remove leaf spring from body.

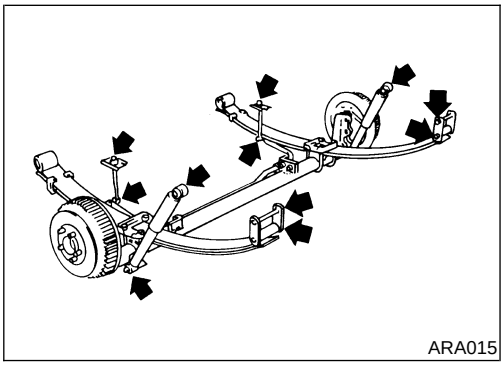

- **Final tightening for rubber parts must be carried out under unladen condition* with tires on ground.**

*: Fuel, radiator coolant and engine oil full. Spare tire, jack, hand tools and mats in designated positions.

Leaf Spring

COMPONENTS

NDSU0033

SEC. 431

Damper
* Make sure of front mark.

16 – 22 (1.6 – 2.2, 12 – 16)

79 - 99 (8.1 - 10.1, 59 - 73)

89 - 104 (9.1 - 10.6, 66 - 77)

Rear spring plate

Rear spring bushing

Upper rear spring seat

Rear spring shackle

Rear spring (Leaf spring)

Shock absorber with rubber bushing

30 – 40 (3.1 – 4.1, 22 – 30)

Rear spring bushing

79 - 99 (8.1 - 10.1, 59 - 73)

Lower rear spring seat

30 – 40 (3.1 – 4.1, 22 – 30)

Rear spring clip bolt (U-bolt)

Front (Left side shown)

When installing rubber parts, final tightening must be carried out under unladen condition* with tires on ground.
* Fuel, radiator coolant and engine oil full. Spare tire, jack, hand tools and mats in designated positions.

: Always replace

: N·m (kg-m, ft-lb)

ASU004

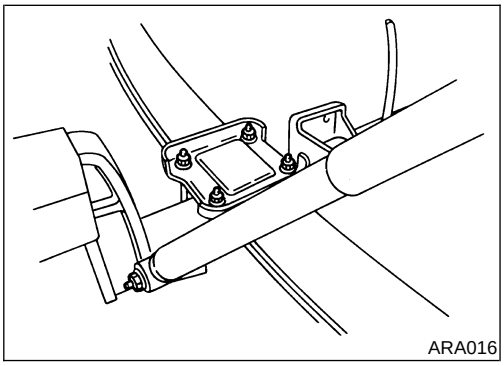

ARA016

REMOVAL

NDSU0034

1. Disconnect shock absorber lower end, and remove U-bolts.

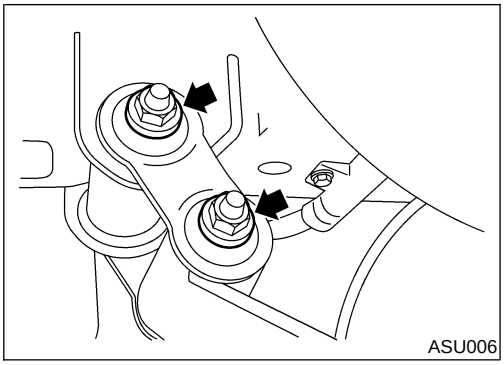

2. Disconnect spring shackle.

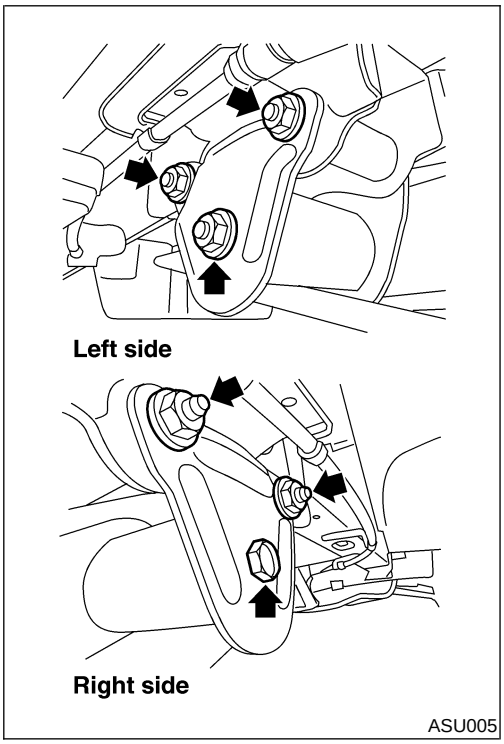

3. Loosen upper pin nuts.
4. Disconnect front eye bolt.

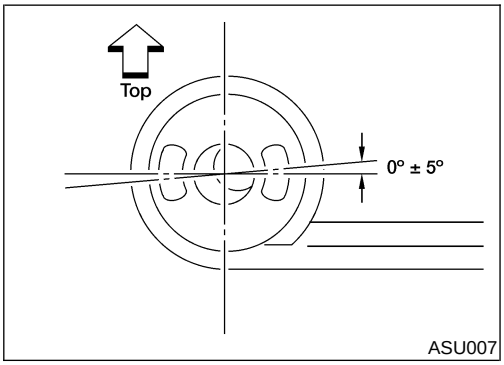

INSPECTION

NDSU0035

- Check leaf spring for cracks. Replace if necessary.
- Check front spring plates, front eye bolt, upper pins, shackle, U-bolts and spring seat for wear, cracks, straightness and damage. Replace if necessary.
- Check rubber bushings for deformation and cracks. Replace if necessary.
- When installing front eye bushing, make sure that it is positioned as shown at left.

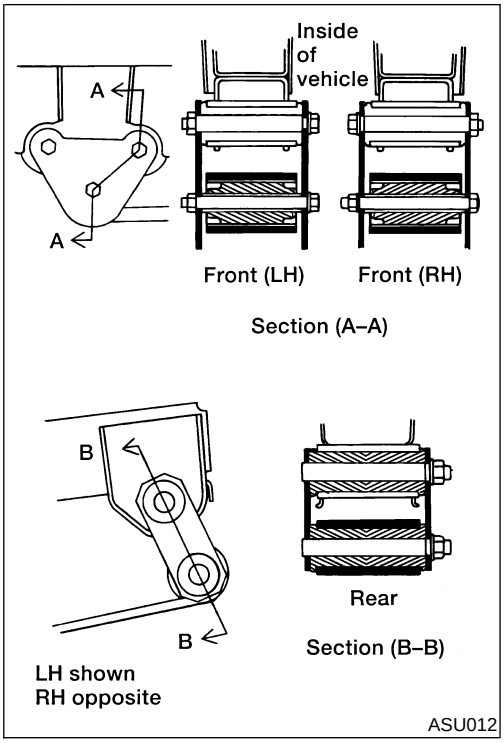

INSTALLATION

NDSU0036

1. Apply soapsuds to rubber bushing.
2. Install rubber bushing, spring shackle and front eye bolt, and finger tighten the nuts.

- **When installing the nuts on the front shackle, they must be positioned as shown.**
- **Rear shackles may be installed from either direction.**

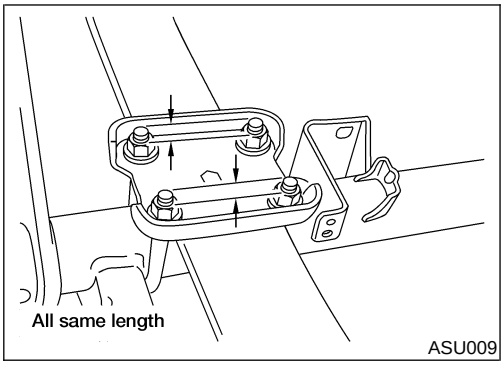

3. Install leaf spring assembly aligning spring center bolt with the hole in lower seat.
4. Install upper seat on top of leaf spring assembly aligning the hole in upper seat with spring center bolt.
5. Tighten U-bolt mounting nuts diagonally.
6. Install shock absorber, and finger tighten the nut.

- **Tighten U-bolts so that the lengths of all U-bolts on upper spring seat are the same.**

  : 79 - 99 N·m (8.1 - 10.1 kg-m, 59 - 73 ft-lb)

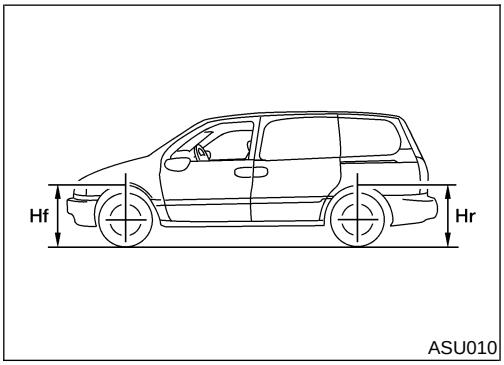

7. Remove stands and bounce the vehicle to stabilize suspension. (Unladen)

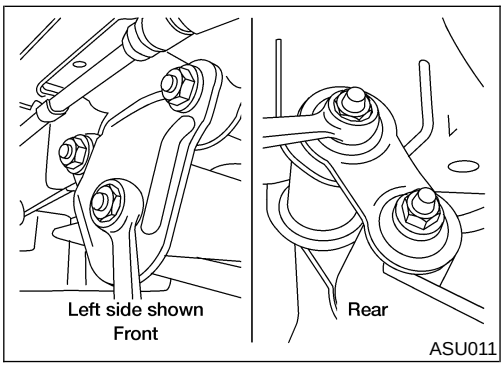

8. Tighten spring shackle nuts, front eye bolt nuts and upper pin nuts and shock absorber nuts. Refer to SU-20.

- **When installing rubber parts, final tightening must be carried out under unladen condition* with tires on ground.**

*: Fuel, radiator coolant and engine oil full. Spare tire, jack, hand tools and mats in designated positions.

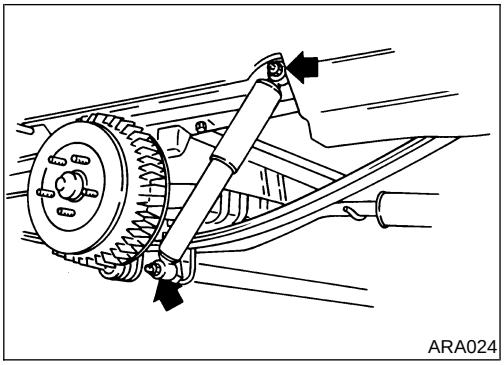

Shock Absorber

REMOVAL AND INSTALLATION

NDSU0037

- Remove shock absorber by disconnecting upper support bracket fastener and lower nut.

WARNING:

Do not heat. Shock absorbers are gas charged.

INSPECTION

NDSU0038

- Check both compression and extension for smooth operation through a full stroke.
- If oil leakage, cracks or deformation occurs, replace shock absorber assembly.
- If rubber bushings are cracked or deformed, replace rubber bushings.

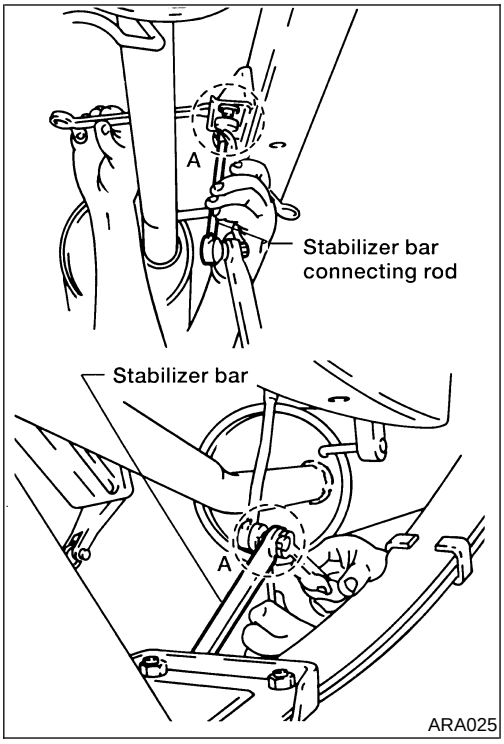

Stabilizer Bar

REMOVAL AND INSTALLATION

NDSU0039

- When removing and installing stabilizer bar, fix portion A.

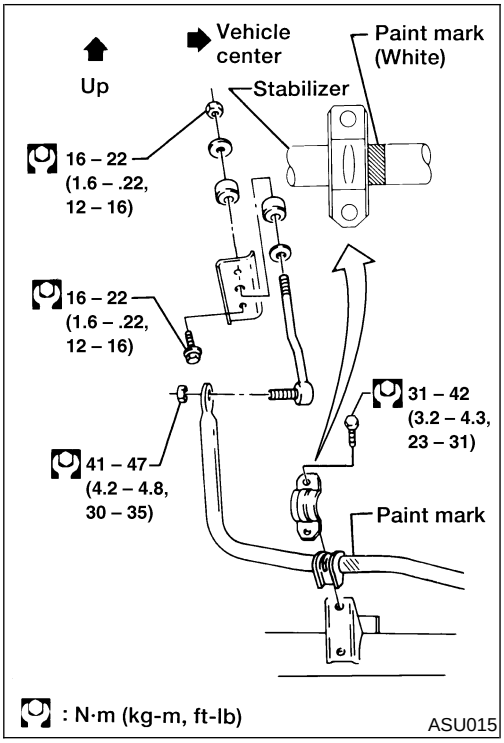

- When installing stabilizer, it must be positioned as shown.

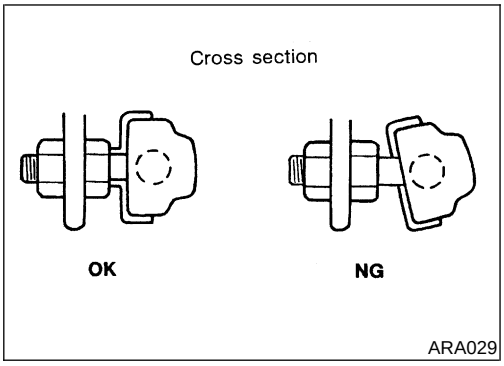

- Install stabilizer bar with ball joint socket properly placed.

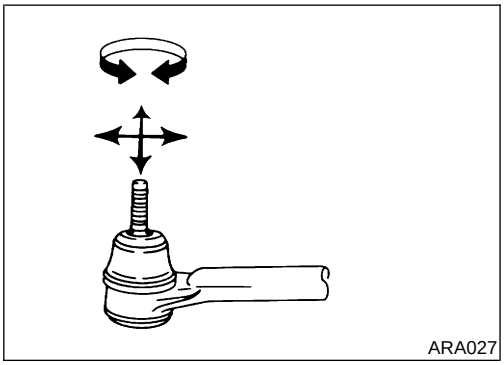

INSPECTION

NDSU0040

- Check stabilizer bar and stabilizer connecting rod for deformation and cracks. Replace if necessary.
- Check rubber bushings for deterioration and cracks. Replace if necessary.
- Check that ball joint can rotate in all directions. If movement is not smooth and free, replace stabilizer connecting rod.
- Check ball joint dust boot for damage. Replace stabilizer connecting rod if necessary.
- Use care not to damage ball joint dust boot.

Service Data and Specifications (SDS)

GENERAL SPECIFICATIONS (REAR)

NDSU0041

	Standard suspension	Handling suspension
Suspension type	Rigid axle with semi-elliptic leaf spring	
Shock absorber type	Double-acting hydraulic	
Stabilizer diameter mm (in)	N/A	20 (0.79)

REAR WHEEL ALIGNMENT (UNLADEN*1)

NDSU0043

Degree minute (Decimal degree)

Applied model		All	
Camber		Minimum	−15′ (−0.25°)
		Nominal	0° (0°)
		Maximum	15′ (0.25°)
Total toe-in	Distance (A - B)	Minimum	-4 mm (-0.16 in)
		Nominal	0 mm (0 in)
		Maximum	4 mm (0.16 in)
	Angle (left plus right)	Minimum	-22′ (-0.37°)
		Nominal	0° (0°)
		Maximum	22′ (0.37°)

*1: Fuel, radiator coolant and engine oil full. Spare tire, jack, hand tools and mats in designated positions.

WHEELARCH HEIGHT (UNLADEN*)

NDSU0044

Unit: mm (in)

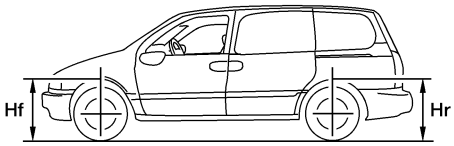

ASU010

Applied model		All
Front (Hf)	Standard/Optional suspension	772 ± 10 (30.39 ± 0.39)
Rear (Hr)	Standard/Optional suspension	793 ± 10 (31.22 ± 0.39)

*: Fuel, radiator coolant and engine oil full. Spare tire, jack, hand tools and mats in designated positions.

WHEEL RUNOUT

NDSU0045

Unit: mm (in)

Wheel type	Aluminum wheel	Steel wheel
Maximum radial runout limit	0.3 (0.012)	0.5 (0.020)
Maximum lateral runout limit	0.3 (0.012)	0.8 (0.031)

NOTES