SECTION EM

CONTENTS

Parts Requiring Angular Tightening

- Use an angle wrench for the final tightening of the following engine parts:
  (1) Cylinder head bolts
  (2) Connecting rod cap nuts
- Do not use a torque value for final tightening.
- The torque values for these parts are for a preliminary step.
- Ensure that the thread and seat surfaces are clean and coated with engine oil.

Liquid Gasket Application Procedure

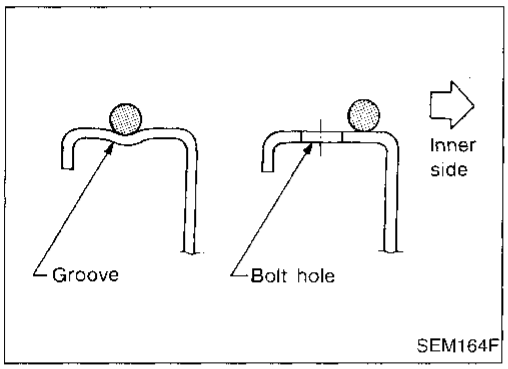

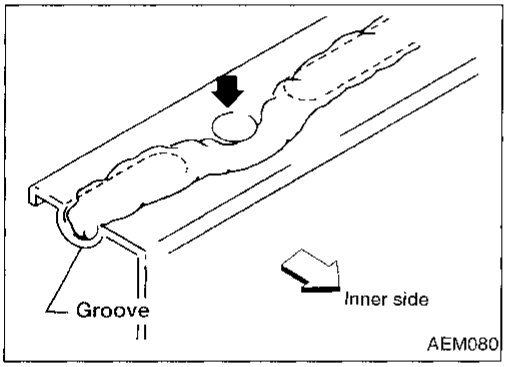

a. **Use a scraper to remove old liquid gasket from mating surfaces and grooves. Also, completely clean any oil from these areas.**
b. **Apply a continuous bead of liquid gasket to mating surfaces. (Use Genuine Liquid Gasket or equivalent.)**
   - **For oil pan, be sure liquid gasket diameter is 3.5 to 4.5 mm (0.138 to 0.177 in).**
   - **For areas except oil pan, be sure liquid gasket diameter is 2.0 to 3.0 mm (0.079 to 0.118 in).**
c. **Apply liquid gasket around the inner side of bolt holes (unless otherwise specified).**
d. **Assembly should be done within 5 minutes after coating.**
e. **Wait at least 30 minutes before refilling engine oil and engine coolant.**

Special Service Tools

The actual shapes of Kent-Moore tools may differ from those of special service tools illustrated here.

Tool number (Kent-Moore No.) Tool name	Description	
ST0501S000 (—) Engine stand assembly ① ST05011000 (—) Engine stand ② ST05012000 (—) Base	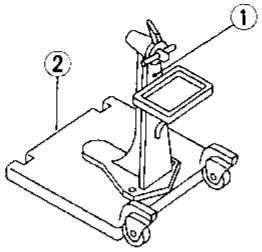 NT042	Disassembling and assembling
KV10106500 (—) Engine stand shaft	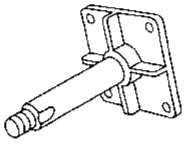 NT028	
KV10110001 (—) Engine sub-attachment	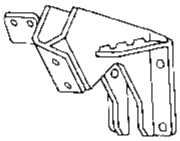 NT032	
ST10120000 (J24239-01) Cylinder head bolt wrench	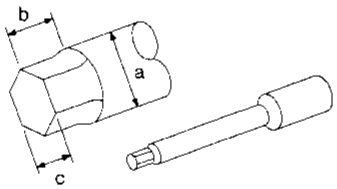 NT583	Loosening and tightening cylinder head bolt **a: 13 (0.51) dia.** **b: 12 (0.47)** **c: 10 (0.39)** Unit: mm (in)
KV10110600 (J39773) Valve spring compressor	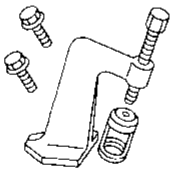 NT033	Disassembling and assembling valve components
EM03470000 (J8037) Piston ring compressor	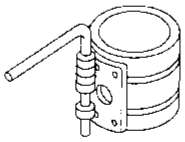 NT044	Installing piston assembly into cylinder bore
ST16610001 (J23907) Pilot bushing puller	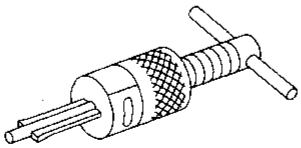 NT045	Removing crankshaft pilot bushing
KV10111100 (J37228) Seal cutter	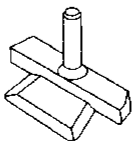 NT046	Removing oil pan

Special Service Tools (Cont'd)

Tool number (Kent-Moore No.) Tool name	Description	
KV10114400 (J38365) Heated oxygen sensor wrench	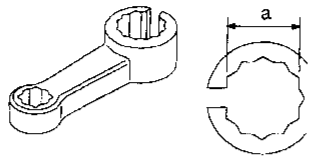 NT636	Loosening or tightening heated oxygen sensor **a: 22 mm (0.87 in)**

Commercial Service Tools

Tool name	Description	
Spark plug wrench	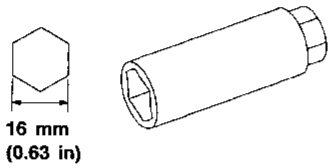 NT047	Removing and installing spark plug
Pulley holder	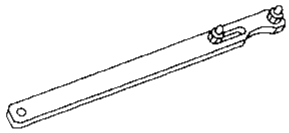 NT035	Holding camshaft pulley while tightening or loosening camshaft bolt
Valve seat cutter set	 NT048	Finishing valve seat dimensions
Piston ring expander	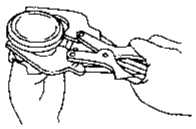 NT030	Removing and installing piston ring
Valve guide drift	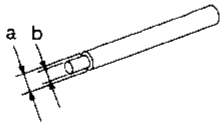 NT015	Removing and installing valve guide **Intake & Exhaust:** **a: 10.5 mm (0.413 in) dia.** **b: 6.6 mm (0.260 in) dia.**
Valve guide reamer	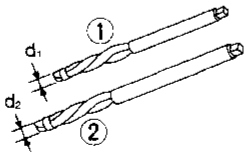 NT016	Reaming valve guide ① or hole for oversize valve guide ② **Intake:** **d_1 = 7.0 mm (0.276 in) dia.** **d_2 = 11.2 mm (0.441 in) dia.** **Exhaust:** **d_1 = 8.0 mm (0.315 in) dia.** **d_2 = 12.2 mm (0.480 in) dia.**
Valve oil seal drift	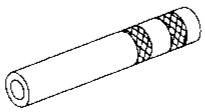 NT027	Installing valve oil seal

SEC. 120•140•164•211

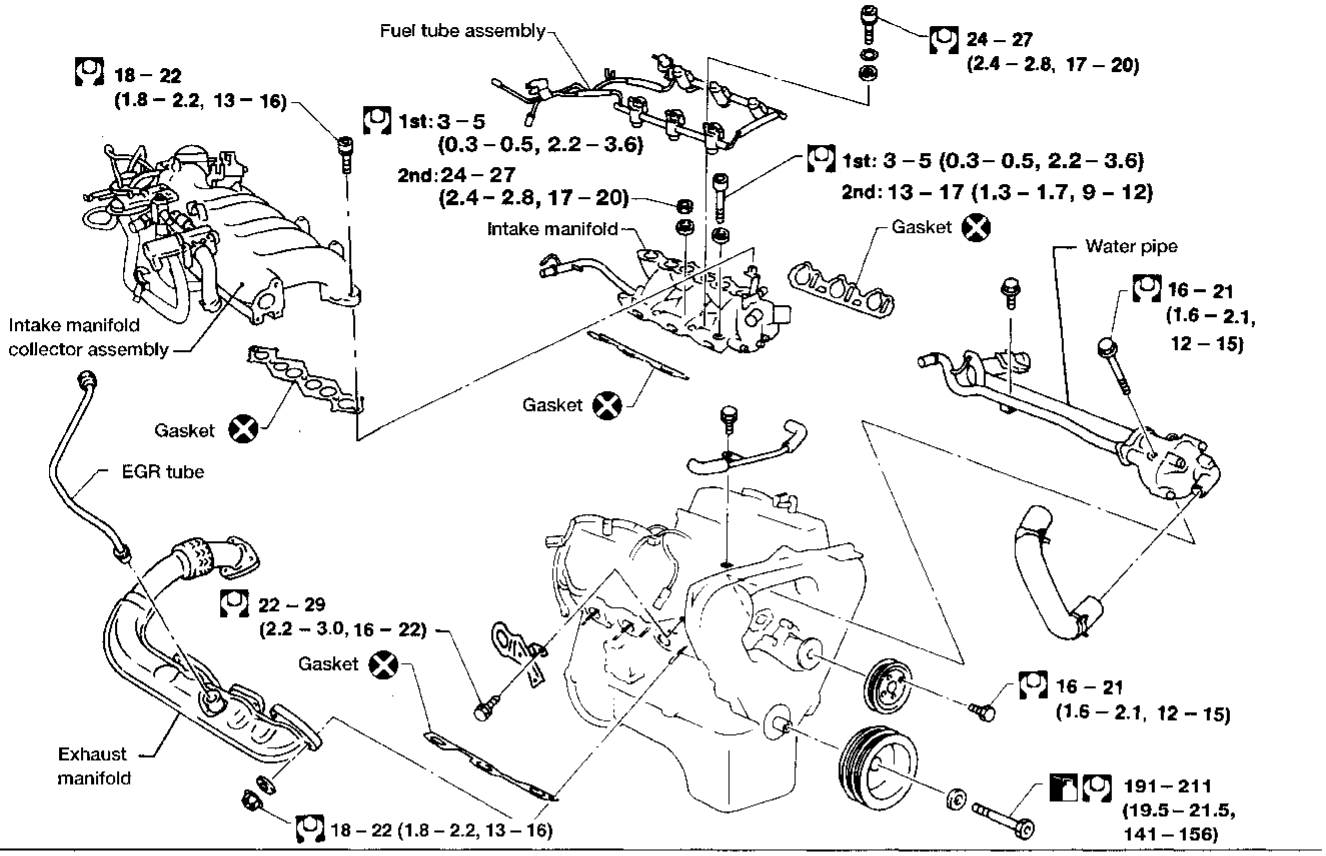

SEC. 140•221

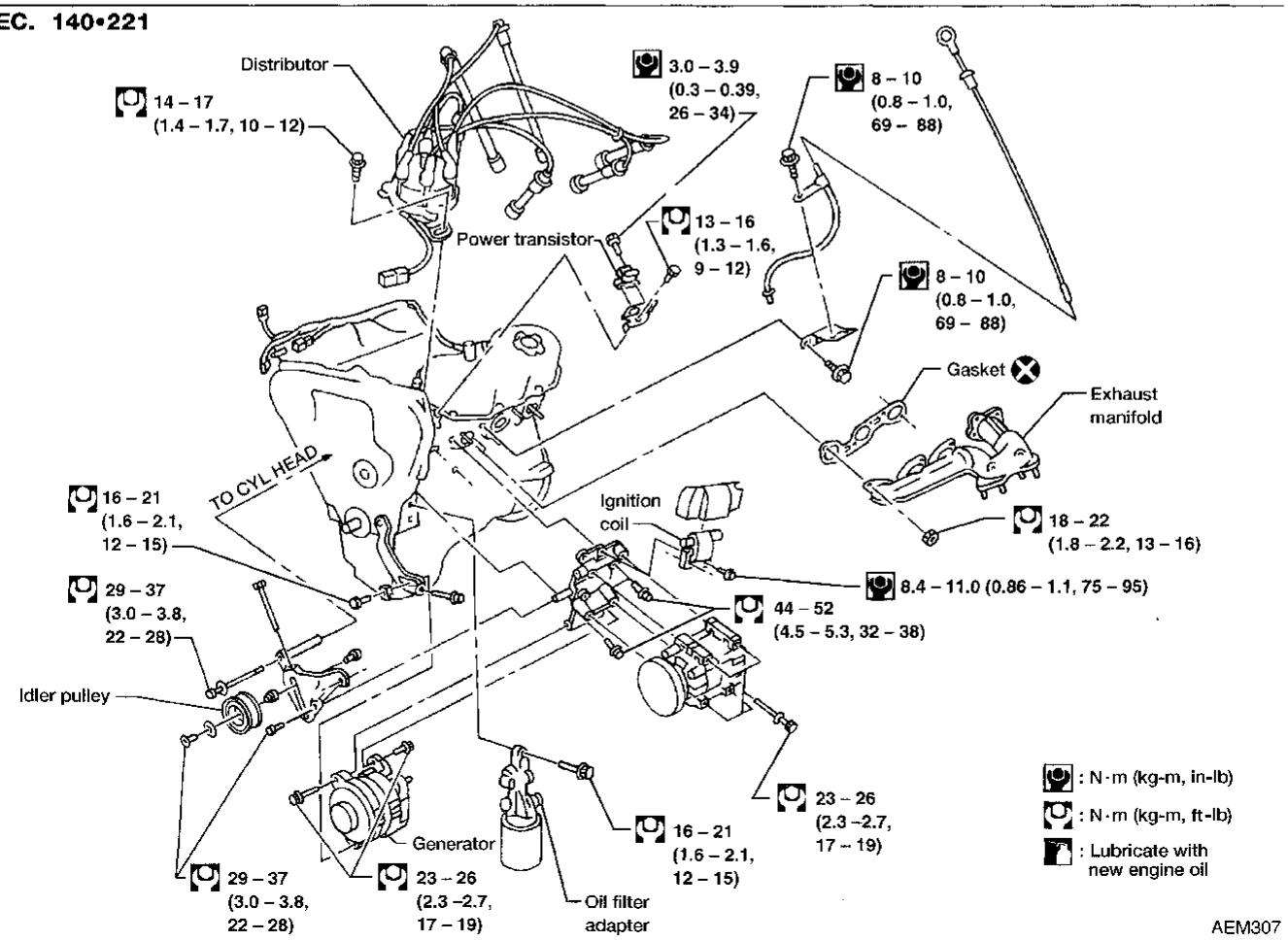

SEC. 140•147•148•163•223

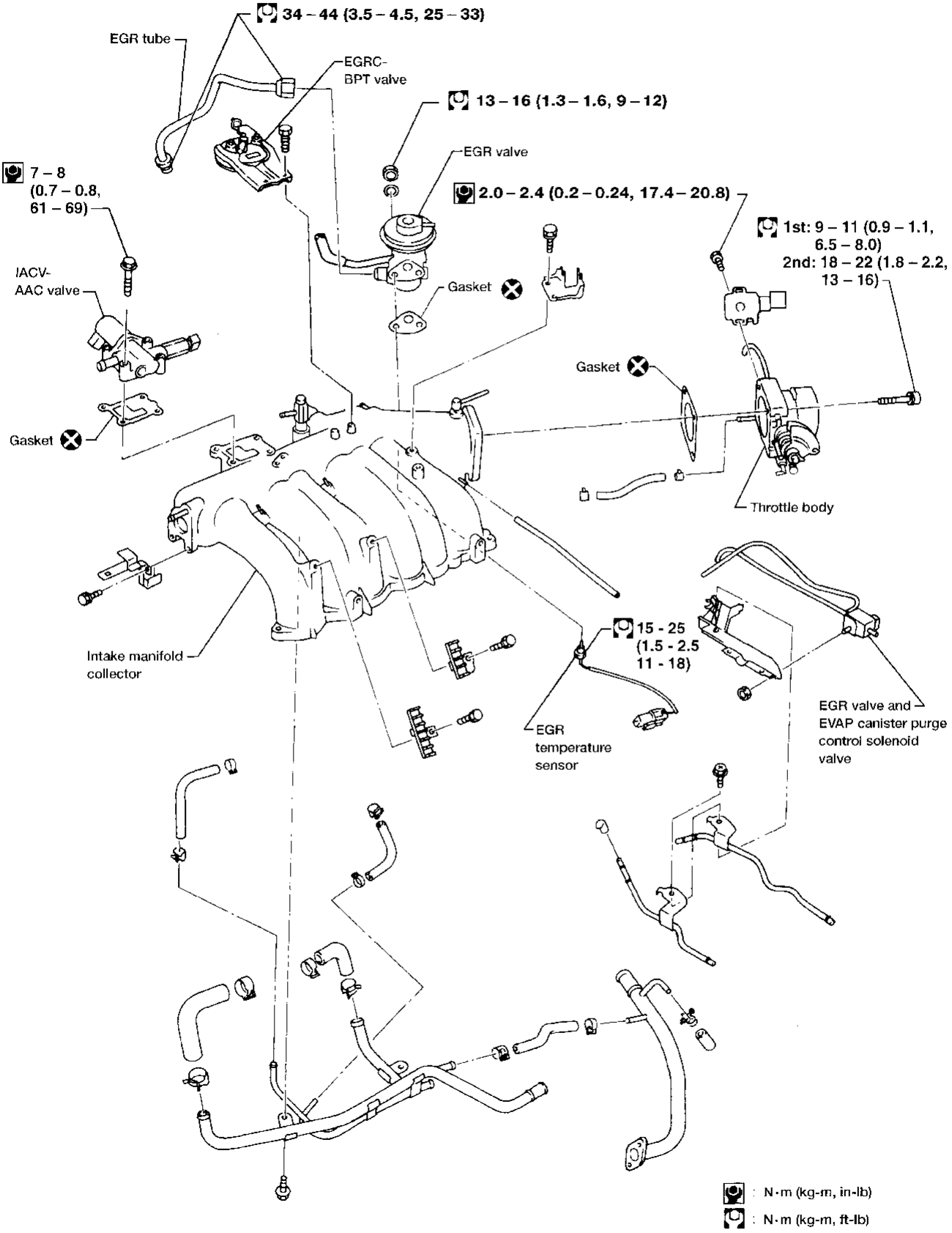

AEM296

Measurement of Compression Pressure

1. Warm up engine.
2. Turn ignition switch OFF.
3. Release fuel pressure.
   Refer to EC section ("Fuel Pressure Release", "BASIC SERVICE PROCEDURE").
4. Remove all spark plugs.
5. Disconnect distributor center cable.

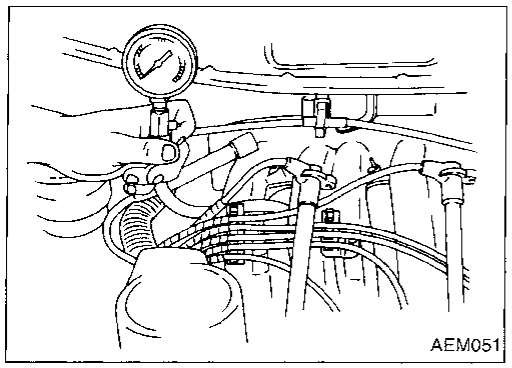

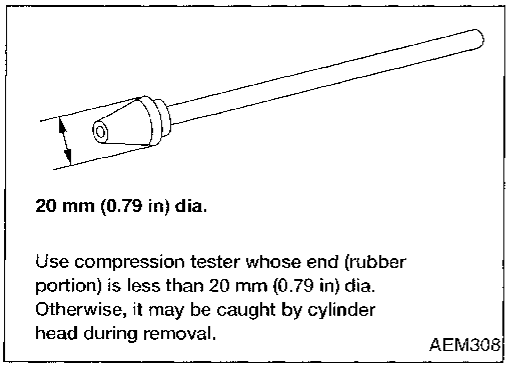

6. Attach a compression tester to No. 1 cylinder.
7. Depress accelerator pedal fully to keep throttle valve wide open.
8. Crank engine and record highest gauge indication.
9. Repeat the measurement on each cylinder.

- **Always use a fully-charged battery to obtain specified engine speed.**

Compression pressure: kPa (kg/cm^2, psi)/300 rpm
Standard
1,196 (12.2, 173)
Minimum
883 (9.0, 128)
Difference limit between cylinders
98 (1.0, 14)

10. If compression in one or more cylinders is low:

a. Pour a small amount of engine oil into cylinders through spark plug holes.
b. Retest compression.

- **If adding oil helps compression, piston rings may be worn or damaged. If so, replace piston rings after checking piston.**
- **If pressure stays low, a valve may be sticking or seating improperly. Inspect and repair valve and valve seat. Refer to SDS, (EM-52 and EM-53). If valve or valve seat is damaged excessively, replace them.**
- **If compression stays low in two cylinders that are next to each other:**

a. The cylinder head gasket may be leaking, or
b. Both cylinders may have valve component damage. Inspect and repair as necessary.

Removal

1. Drain engine oil.
2. Remove engine lower covers.

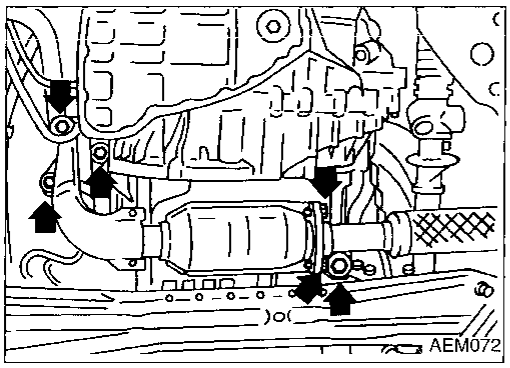

3. Remove exhaust tube fixing nuts and exhaust tube.

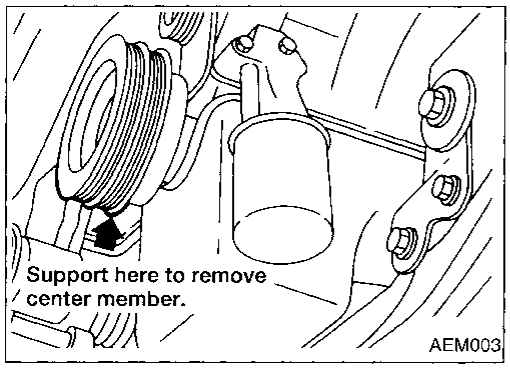

4. Support engine at crankshaft pulley with a suitable jack and block or from above with a suitable support bar or hoist.

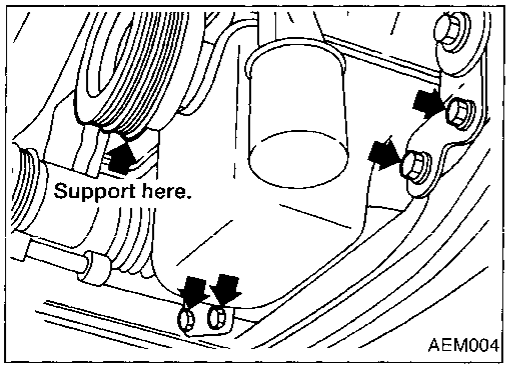

5. Remove engine mounting insulator bolts and nuts.

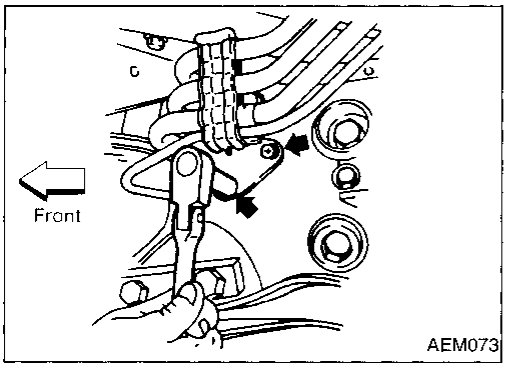

6. Remove the rear A/C refrigerant lines support bracket bolts, if so equipped.

Removal (Cont'd)

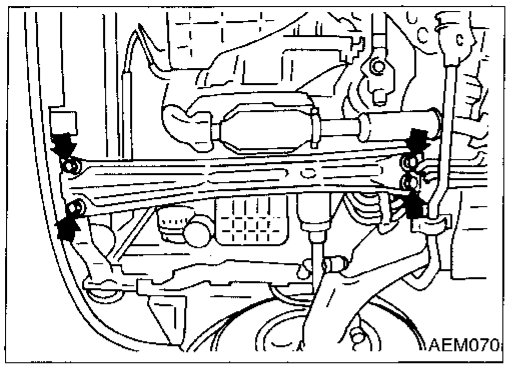

7. Remove center member.

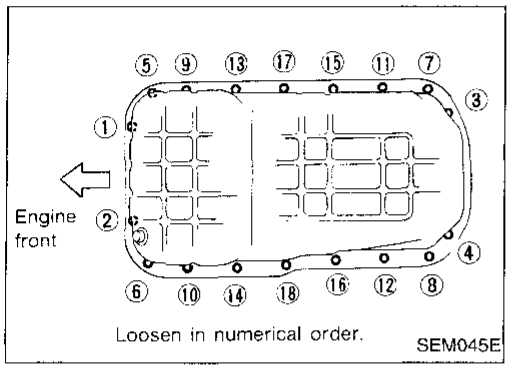

8. Remove oil pan bolts in numerical order.

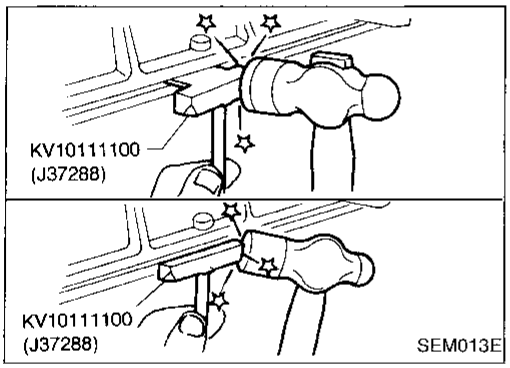

9. Remove oil pan.
a. Insert Tool between cylinder block and oil pan.
- **Be careful not to damage aluminum mating surface.**
- **Do not insert screwdriver, or oil pan flange will be damaged.**

b. Slide Tool by tapping on the side of the Tool with a hammer.

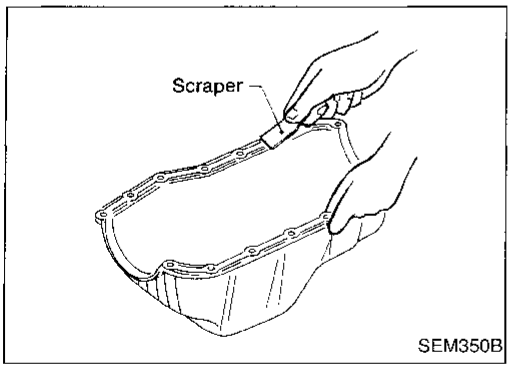

Installation

1. Install oil pan.
a. Use a scraper to remove old liquid gasket from mating surface of oil pan.
- **Also remove old liquid gasket from mating surface of cylinder block.**

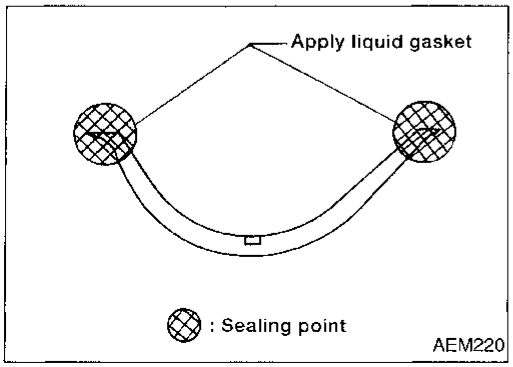

b. Apply liquid gasket to oil pump gasket and rear oil seal retainer gasket.

Installation (Cont'd)

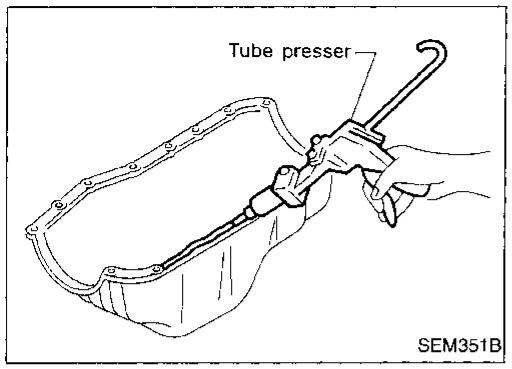

c. Apply a continuous bead of liquid gasket to mating surface of oil pan.

- **Use Genuine Liquid Gasket or equivalent.**

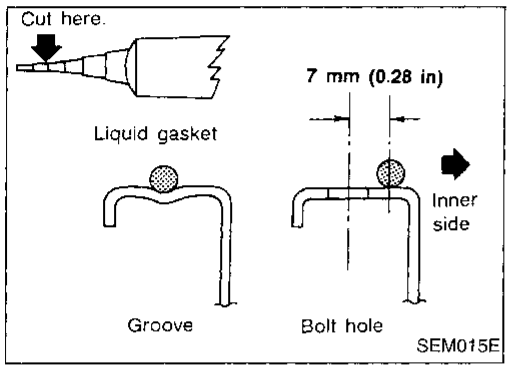

- **Apply to groove on mating surface.**
- **Allow 7 mm (0.28 in) clearance around bolt holes.**
- **Be sure liquid gasket diameter is 3.5 to 4.5 mm (0.138 to 0.177 in).**
- **Attaching should be done within 5 minutes after coating.**

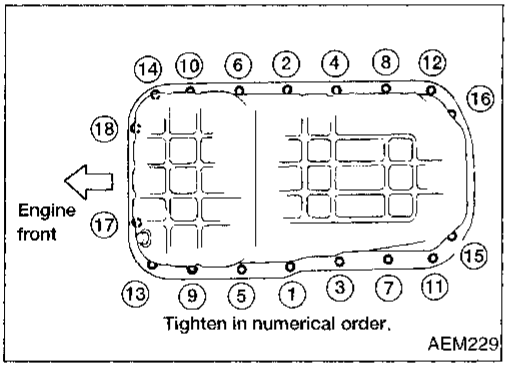

2. Tighten bolts in numerical order.
   : 7 - 8 N·m (0.7 - 0.8 kg-m, 61 - 69 in-lb)

CAUTION:

a. **Do not bend or twist timing belt.**
b. **After removing timing belt, do not turn crankshaft and camshaft separately because valves will strike piston heads.**
c. **Make sure that timing belt, camshaft sprocket, crankshaft sprocket and belt tensioner are clean and free from oil and water.**
d. **Installation should be carried out when engine is cold.**

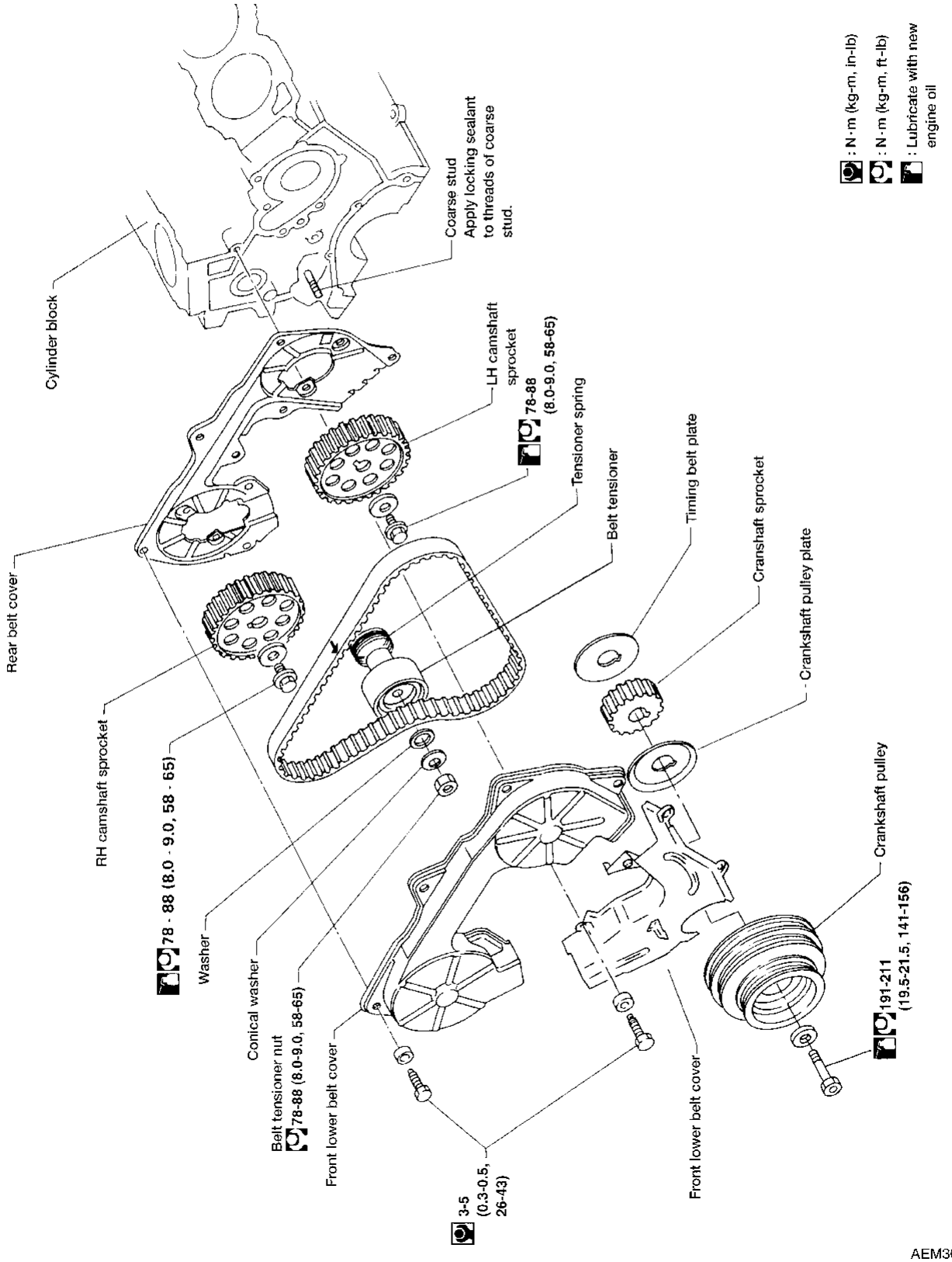

AEM309

Removal

1. Jack up the vehicle front and support with safety stand.
2. Remove engine under covers.
3. Remove front RH wheel and engine side cover.
4. Drain engine coolant. Refer to MA section ("Changing Engine Coolant", "ENGINE MAINTENANCE").
5. Remove the following belts:
- Generator drive belt
- Power steering drive belt
- Compressor drive belt

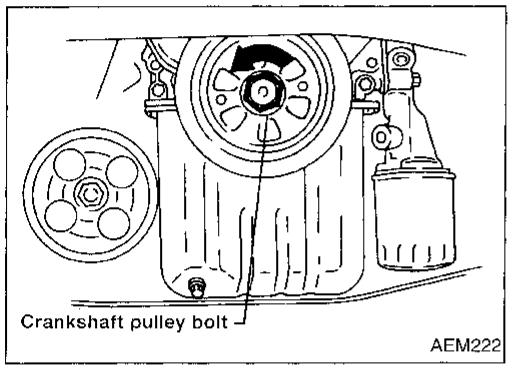

6. Loosen crankshaft pulley bolt.

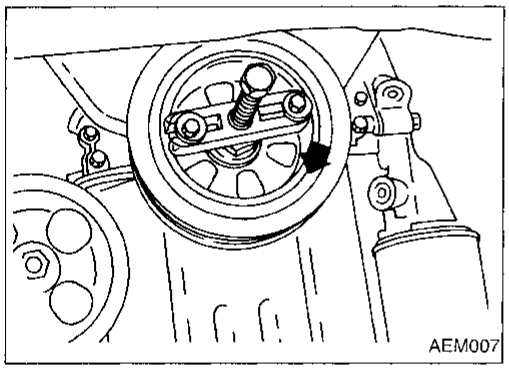

7. Remove crankshaft pulley using a suitable puller.

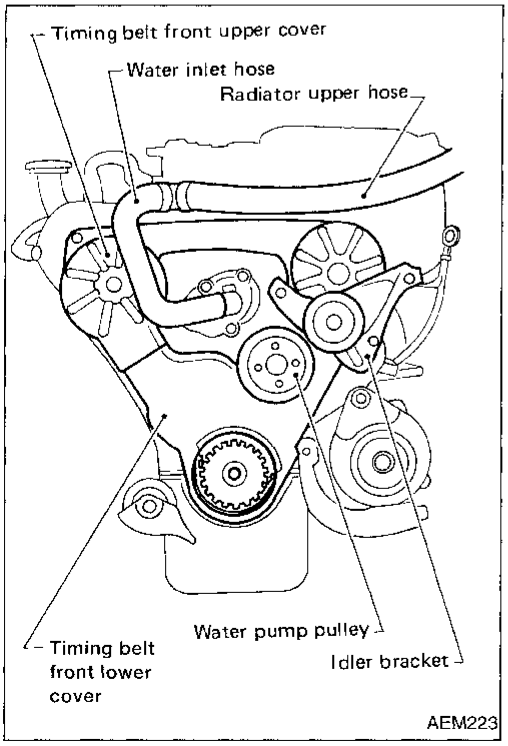

8. Remove radiator upper hose and water inlet hose.
9. Remove compressor drive belt idler bracket.
10. Remove water pump pulley.
11. Remove timing belt front covers.

Removal (Cont'd)

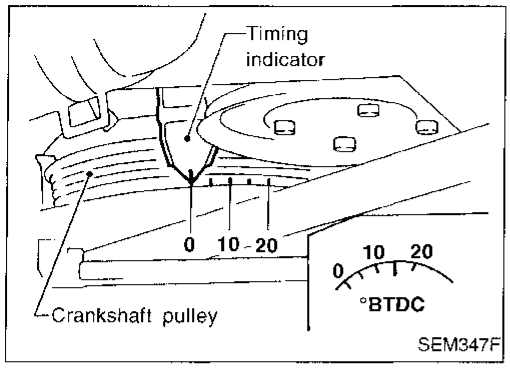

12. Set No. 1 piston at TDC of its compression stroke.

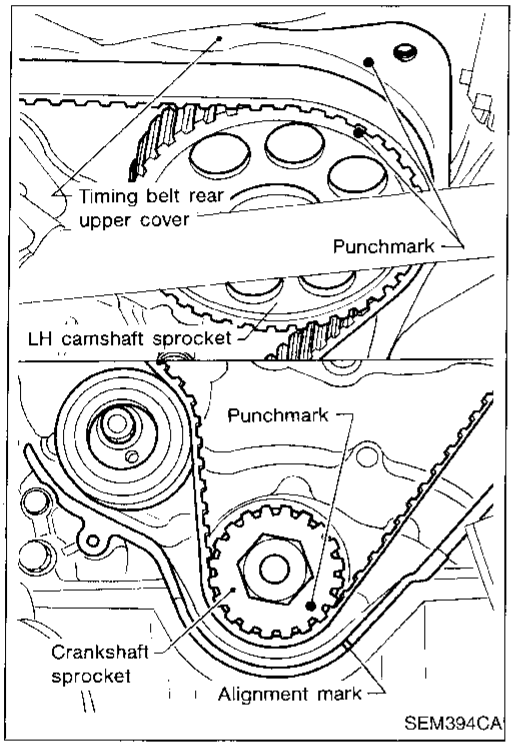

- **Align punchmark on LH camshaft sprocket with punchmark on timing belt rear cover.**
- **Align punchmark on crankshaft sprocket with alignment mark on oil pump housing.**
- **Temporarily install crankshaft pulley bolt on crankshaft so the crankshaft can be rotated.**

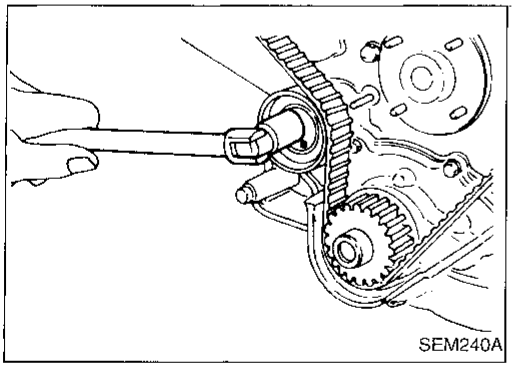

13. Loosen timing belt tensioner nut, rotate tensioner, then remove timing belt.

Inspection

Visually check the condition of timing belt.
Replace if any abnormality is found.

Item to check	Problem	Cause
Tooth is broken/tooth root is cracked.	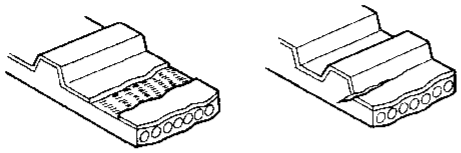 SEM394A	• Camshaft jamming • Distributor jamming • Damaged camshaft/crankshaft oil seal
Back surface is cracked/ worn.	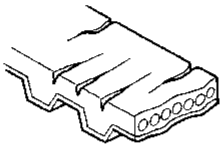 SEM395A	• Tensioner jamming • Overheated engine • Interference with belt cover
Side surface is worn.	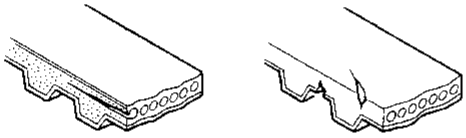 • Belt corners are worn and round. • Wicks are frayed and coming out. SEM396A	• Improper installation of belt • Malfunctioning crankshaft pulley plate/timing belt plate
Teeth are worn.	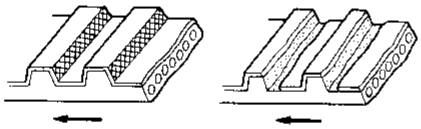 Rotating direction • Canvas on tooth face is worn down. • Canvas on tooth is fluffy, rubber layer is worn down and faded white, or weft is worn down and invisible. SEM397A	• Poor belt cover sealing • Coolant leakage at water pump • Camshaft not functioning properly • Distributor not functioning properly • Excessive belt tension
Oil, coolant or water is stuck to belt.	—	• Poor oil sealing of each oil seal • Coolant leakage at water pump • Poor belt cover sealing

Inspection (Cont'd)

BELT TENSIONER AND TENSIONER SPRING

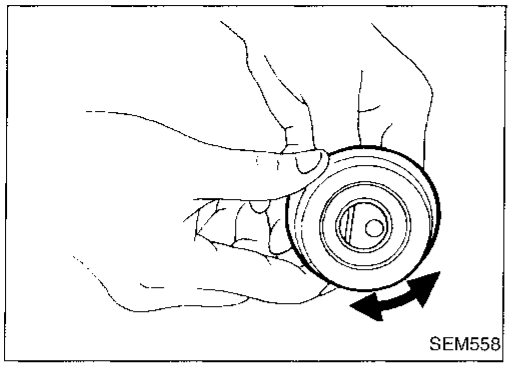

1. Check belt tensioner for smooth turning.
2. Check condition of tensioner spring.

Installation

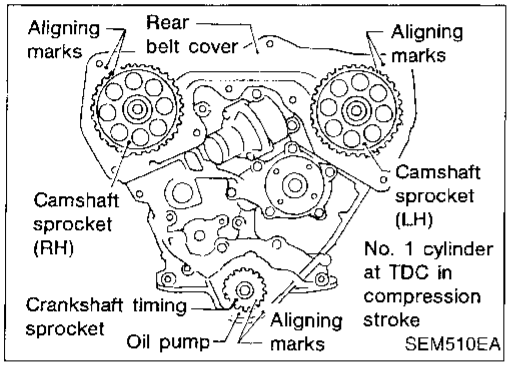

1. Confirm that No. 1 piston is set at TDC of its compression stroke.

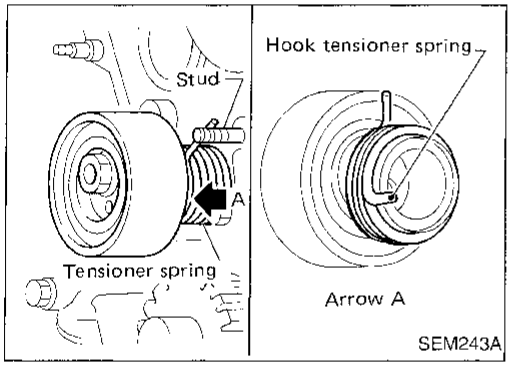

2. Install tensioner and tensioner spring.

If stud is removed, apply locking sealant to threads before installing.

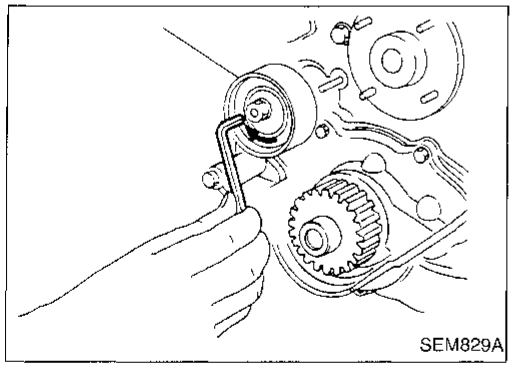

3. Rotate tensioner fully outward with hexagon wrench, and temporarily tighten lock nut.

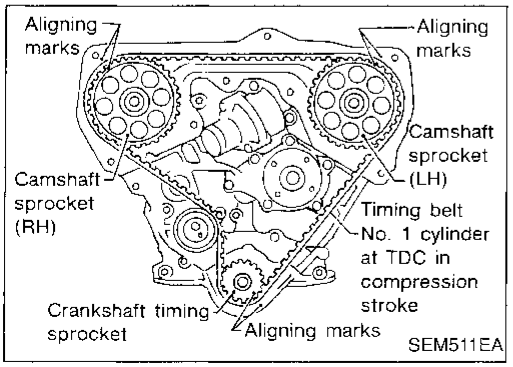

4. Install timing belt.

a. Align white lines on timing belt with punchmarks on camshaft sprockets and crankshaft sprocket.

b. Point arrow on timing belt toward front belt cover.

Number of teeth (reference):

Number of timing belt teeth		133
Number of teeth between timing marks	Between LH and RH camshaft sprockets	40
	Between LH camshaft sprocket and crankshaft timing sprocket	43

Installation (Cont'd)

5. Loosen tensioner lock nut, keeping tensioner steady with hexagon wrench.

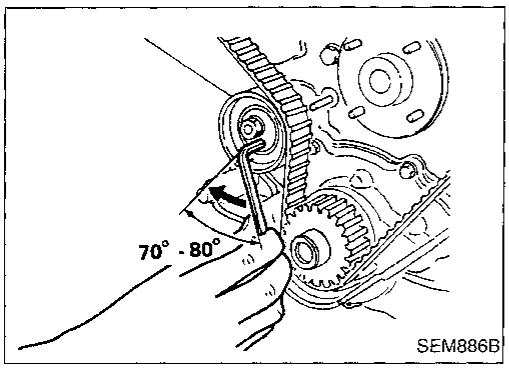

6. Rotate tensioner 70 to 80° clockwise with hexagon wrench, and temporarily tighten lock nut.
7. Turn crankshaft clockwise at least two times, then slowly set No. 1 piston at TDC of its compression stroke.

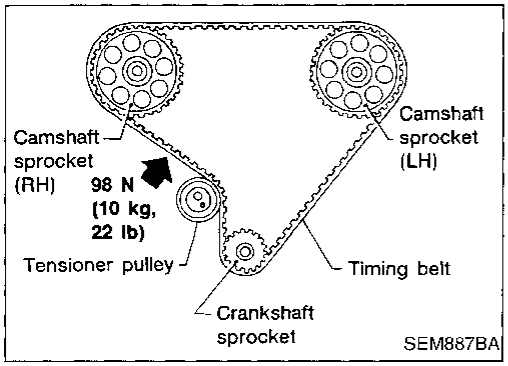

8. Push middle of timing belt between RH camshaft sprocket and tensioner pulley with force of 98 N (10 kg, 22 lb).
9. Loosen tensioner lock nut, keeping tensioner steady with hexagon wrench.

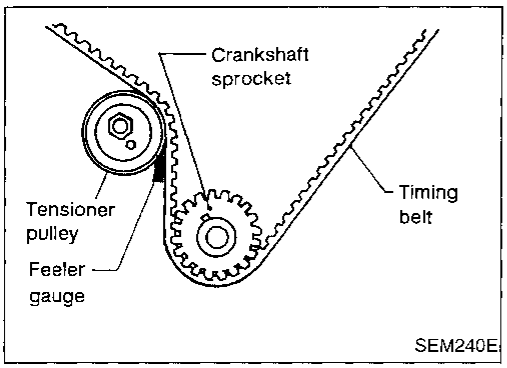

10. Set feeler gauge as shown in figure, which is 0.35 mm (0.0138 in) thick and 12.7 mm (0.500 in) wide.

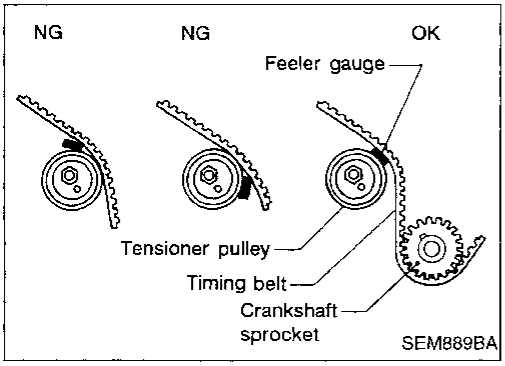

11. Turn crankshaft clockwise, and set feeler gauge as shown in figure.
- Timing belt will move about 2.5 teeth.

12. Tighten tensioner lock nut, keeping tensioner steady with hexagon wrench.
13. Turn crankshaft clockwise and remove feeler gauge.
14. Turn crankshaft clockwise at least two times, then slowly set No. 1 piston at TDC of its compression stroke.
15. Install lower and upper belt covers.

Installation (Cont'd)

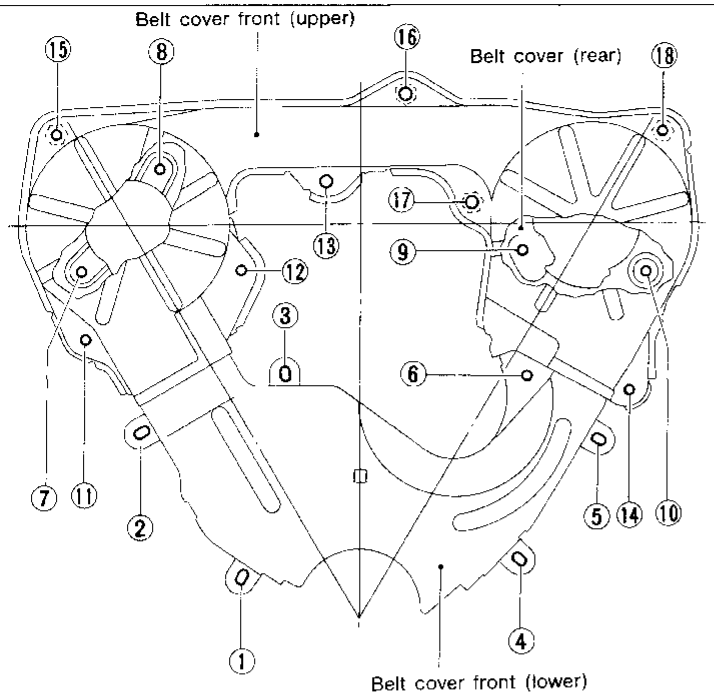

Tightened parts	Section	Parts tightened with bolts
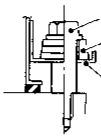 Bolt A (6 pcs.) Rubber washer Belt cover front (lower)	①, ②, ③ ④, ⑤, ⑭	①, ②, ③, ④: Cylinder block ⑤, ⑭: Compressor bracket
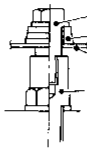 Bolt B (1 pc.) Rubber washer Belt cover front (lower) Water pump mounting bolts	⑥	Water pump mounting bolt
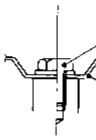 Bolt C (4 pcs.) Belt cover (rear)	⑦, ⑧, ⑨ ⑩	Cylinder head
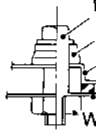 Bolt A (7 pcs.) Rubber washer Belt cover front (upper) Belt cover (rear) Welded nut (4 pcs.)	⑮, ⑯, ⑰ ⑱, ⑪, ⑫ ⑬	⑮, ⑯, ⑰, ⑱: Welded nuts ⑪, ⑫: Cylinder head ⑬: Water outlet

SEM248A

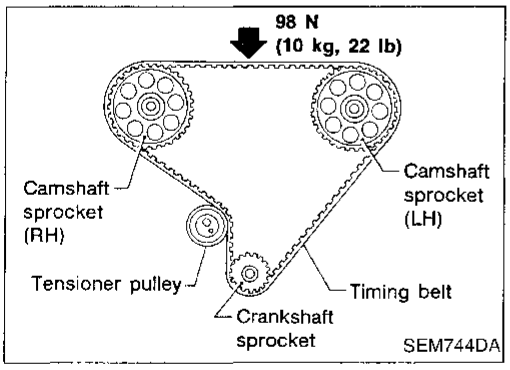

BELT TENSION CHECK

1. Set No. 1 piston at TDC of its compression stroke.
2. Measure deflection of timing belt midway between camshaft sprockets when pushing with force of 98 N (10 kg, 22 lb).
   Belt deflection (Reference value):
   13 - 15 mm (0.51 - 0.59 in)/98 N (10 kg, 22 lb)

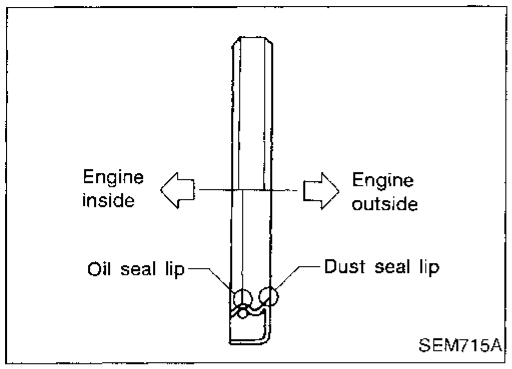

- Install new oil seal in the direction shown.

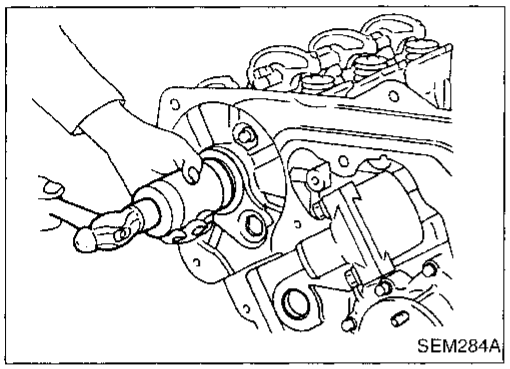

Camshaft Oil Seal

1. Remove timing belt.
2. Remove camshaft sprocket.
3. Remove camshaft oil seal.
- **Be careful not to scratch camshaft.**
4. Apply engine oil to new camshaft oil seal and install using suitable tool.

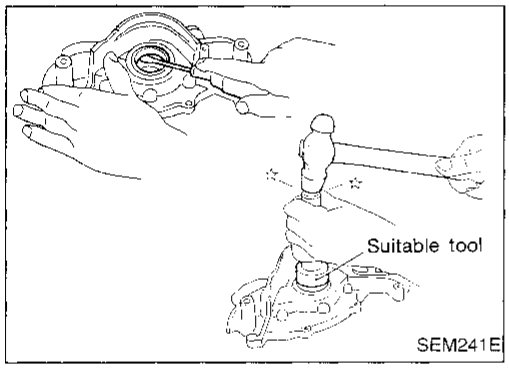

Front Oil Seal

1. Remove timing belt and crankshaft sprocket.
2. Remove oil pump assembly.
3. Remove front oil seal from oil pump body.
4. Apply engine oil to new oil seal and install using suitable tool.

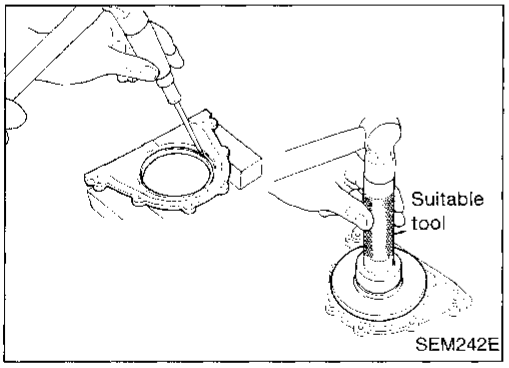

Rear Oil Seal

1. Remove drive plate.
2. Remove rear oil seal retainer.
3. Remove rear oil seal from retainer.
- **Be careful not to scratch rear oil seal retainer.**
4. Apply engine oil to new oil seal and install using suitable tool.
5. Install rear oil seal retainer.
- **Always use a new oil seal retainer to cylinder block gasket.**

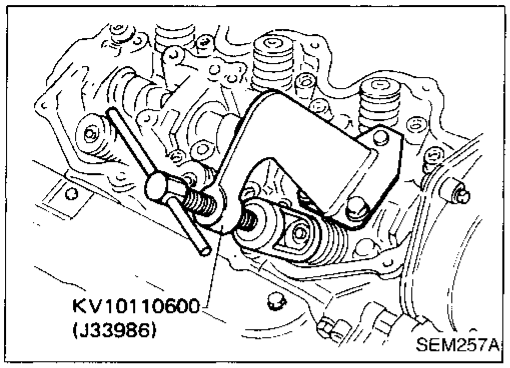

Valve Oil Seal

1. Remove rocker cover.
2. Remove rocker shaft assembly and valve lifters with valve lifter guide.
3. Remove valve springs.
4. Remove valve oil seal.

Piston concerned should be set at TDC to prevent valve from falling.

- When removing intake side valve oil seal, use Tool.

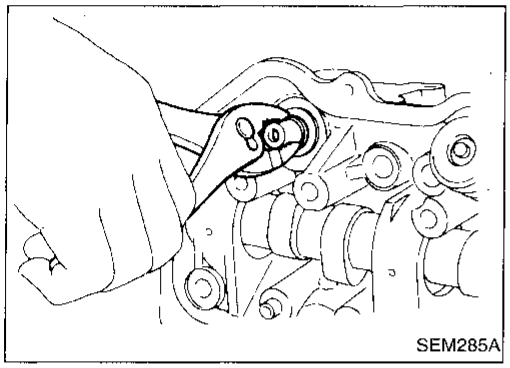

- When removing exhaust side valve oil seal, use a suitable tool.

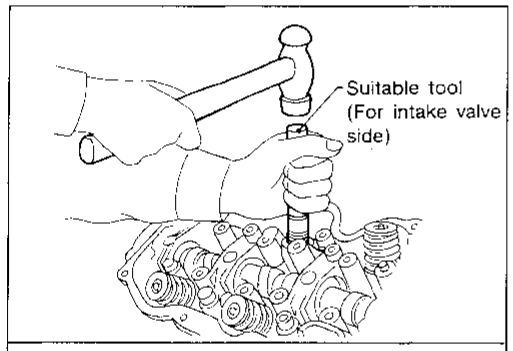

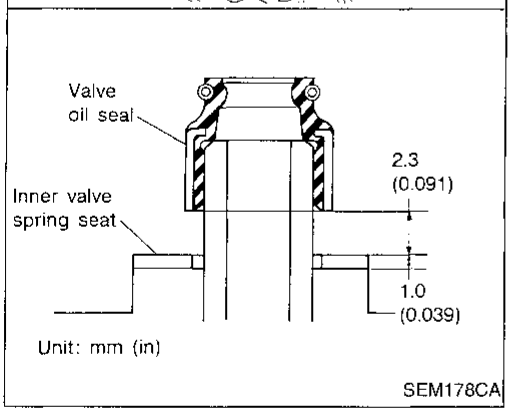

4. Apply engine oil to new valve oil seal and install.

- Before installing valve oil seal, install inner valve spring seat.
- When installing intake side valve oil seal, use suitable tool.
- When installing exhaust side valve oil seal, set it by hand.

SEC. 102•111•130

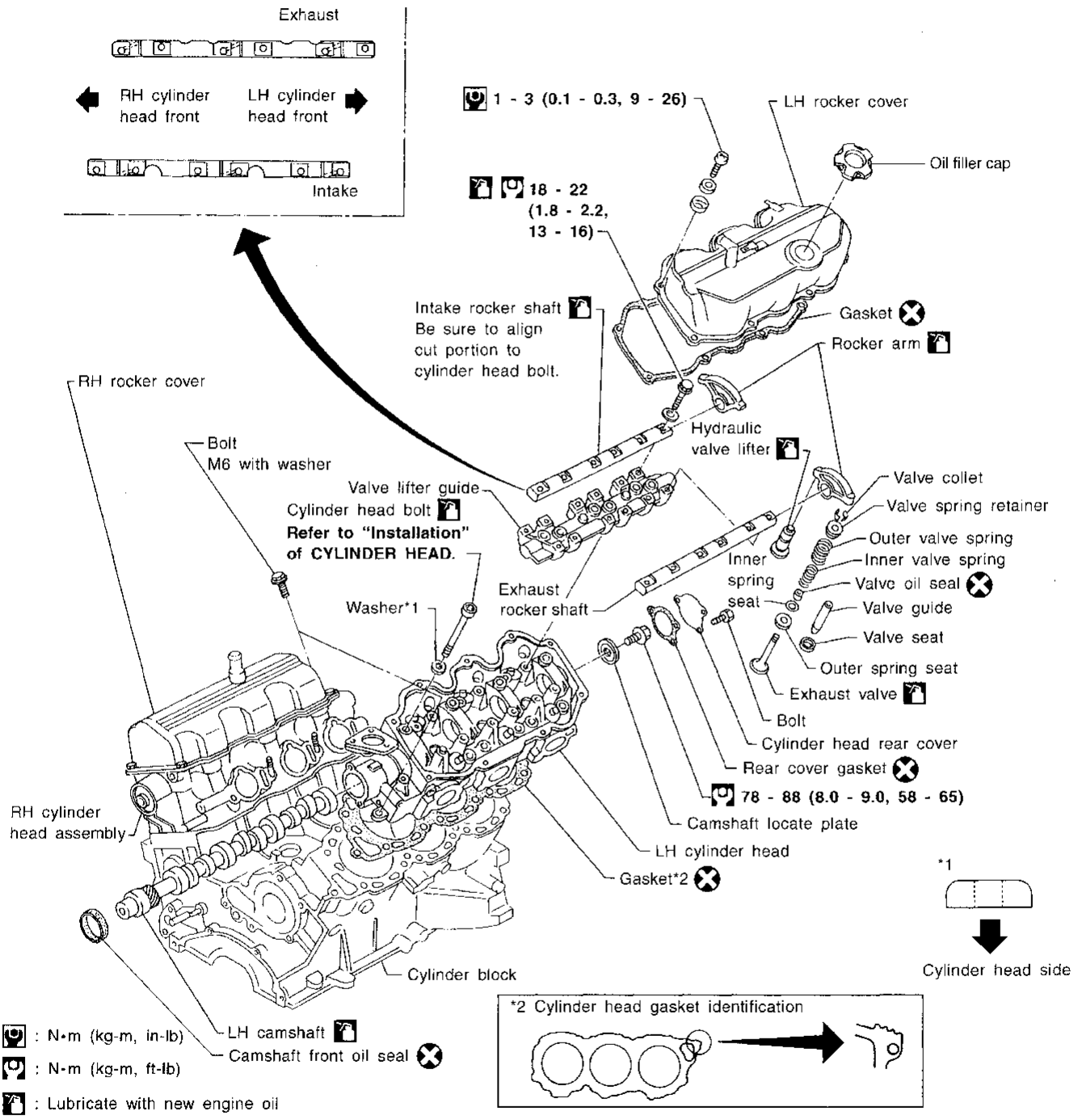

AEM297

CAUTION:

- **When installing rocker arms, camshaft and oil seal, lubricate contacting surfaces with new engine oil.**
- **When tightening cylinder head bolts and rocker shaft bolts, lubricate thread portions and surfaces of bolts with new engine oil.**

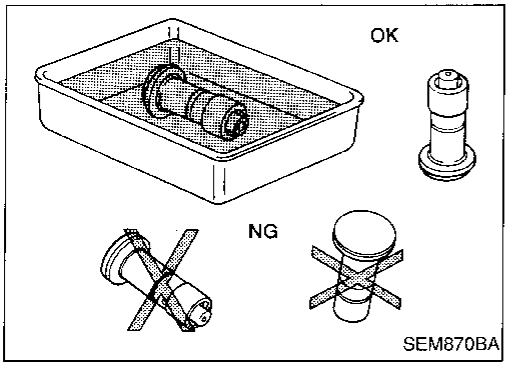

- **If hydraulic valve lifter is kept on its side, there is a risk of air entering it. When hydraulic valve lifters are removed, stand them straight up or soak them in new engine oil.**
- **Do not disassemble hydraulic valve lifter.**
- **Attach tags to valve lifters so as not to mix them up.**

Removal

1. Release fuel pressure.
   Refer to EC section ("Fuel Pressure Release", "BASIC SERVICE PROCEDURE").
2. Remove timing belt. Refer to EM-12.

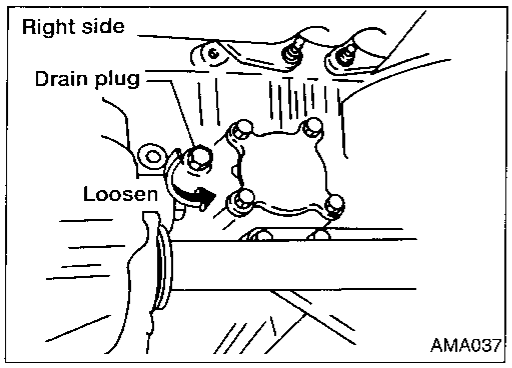

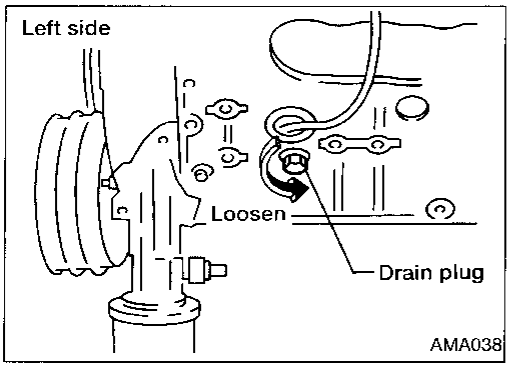

3. Drain coolant from engine block.
   - Remove drain plugs as shown.

Removal (Cont'd)

4. Separate ASCD and accelerator control wire from intake manifold collector.

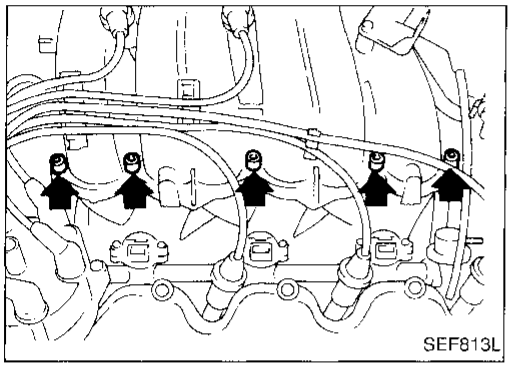

5. Remove intake manifold collector.

Disconnect or remove the following parts:

a. Harness connectors for:
- IACV-AAC valve
- IACV-FICD solenoid valve
- Closed throttle position switch
- Throttle position sensor
- EGR valve & EVAP canister purge control solenoid valve
- EGR temperature sensor
- Main harness connectors and brackets

b. Spark plug wires
c. Distributor dust cover
d. Distributor cap
e. PCV hoses
f. Vacuum hoses for:
- Master brake cylinder
- Fuel pressure regulator
- EVAP canister
- Rear heater valve (if equipped)

g. Air hose from air duct
h. Water hoses for:
- Throttle body
- Water tube

i. EVAP canister purge hose
j. BPT tube (to EGR valve)
k. EGR tube

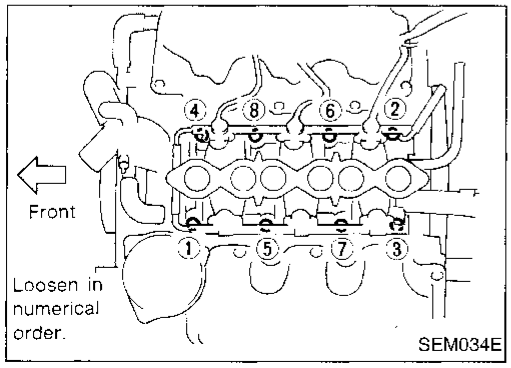

6. Remove intake manifold.

Disconnect or remove the following parts:
- Fuel feed and return hoses
- All fuel injector harness connectors
- Fuel tube assembly
- Upper radiator hose and bracket
- Bypass hose
- Engine coolant temperature sensor harness connector
- Thermal transmitter

Removal (Cont'd)

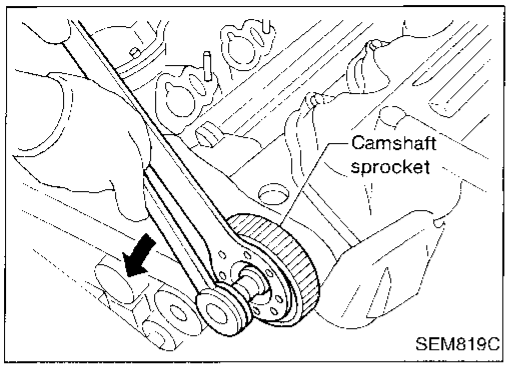

7. Remove both camshaft sprockets.

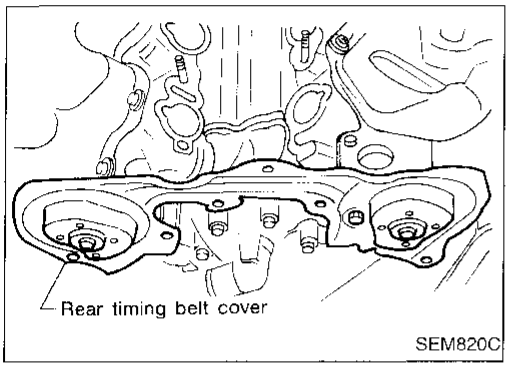

8. Remove rear timing belt cover.
9. Remove distributor.

Do not turn rotor with distributor removed.

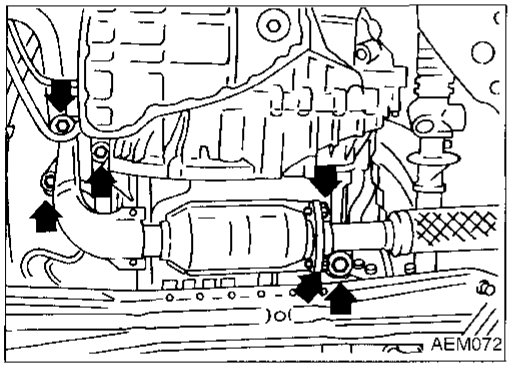

10. Remove exhaust tube from LH exhaust manifold.

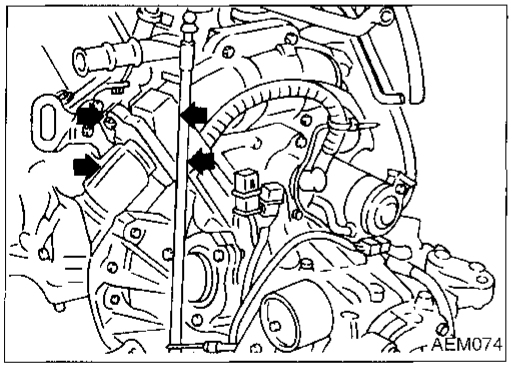

11. Remove the nuts and bolt, then separate the LH exhaust manifold from the RH exhaust manifold.
12. Remove the LH exhaust manifold-to-support bracket bolt.

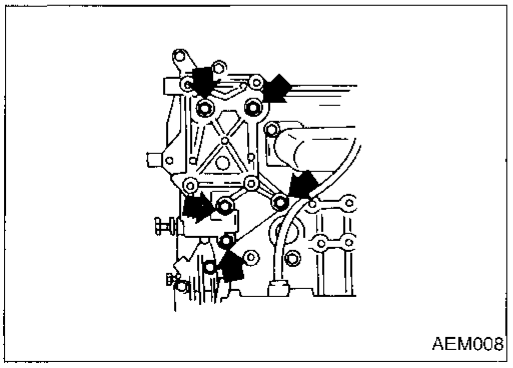

13. Remove air conditioning compressor from bracket.
- Disconnect high pressure switch and magnetic clutch connectors.

14. Remove air conditioning compressor bracket.

Removal (Cont'd)

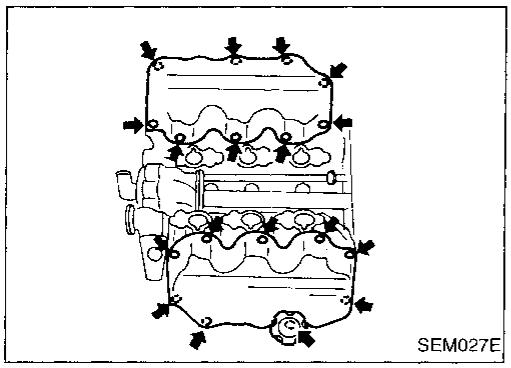

15. Remove both rocker covers.

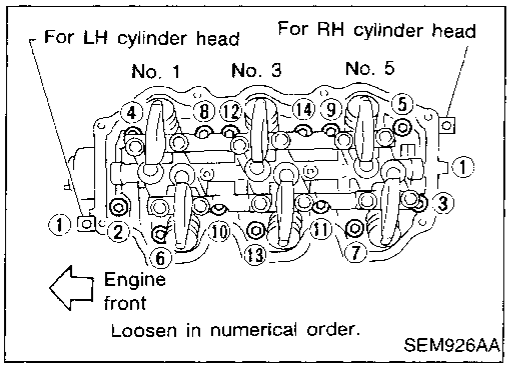

16. Remove cylinder head bolts in numerical order.
- **Removing in incorrect order could result in a warped or cracked cylinder head.**
- **Loosen cylinder head bolts in two or three steps.**

17. Remove cylinder head completely with exhaust manifold.

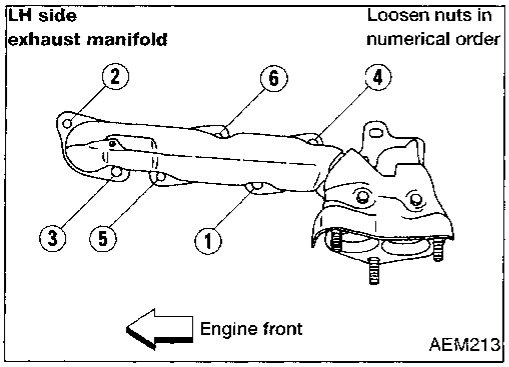

Disassembly

1. Remove exhaust manifold from cylinder head.
- **Loosen exhaust manifold nuts in numerical order.**

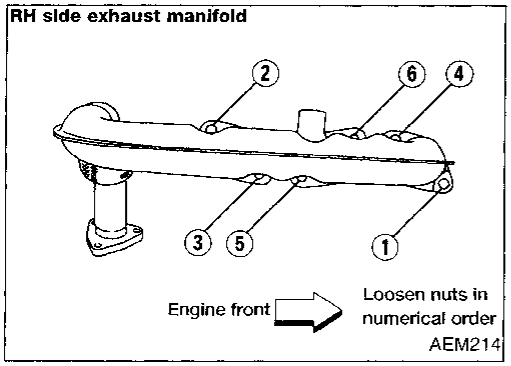

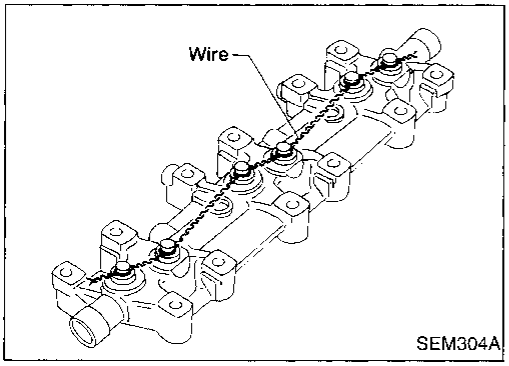

2. Remove rocker shafts with rocker arms.
- **Loosen rocker shaft bolts in two or three steps.**

3. Remove hydraulic valve lifters with lifter guide.
- **Use wire to hold hydraulic valve lifters so they will not drop from lifter guide.**

Disassembly (Cont'd)

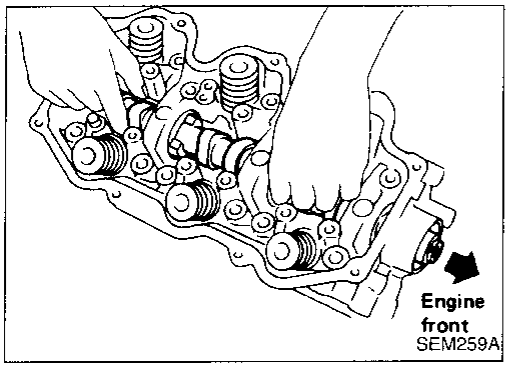

4. Remove oil seal and camshaft.

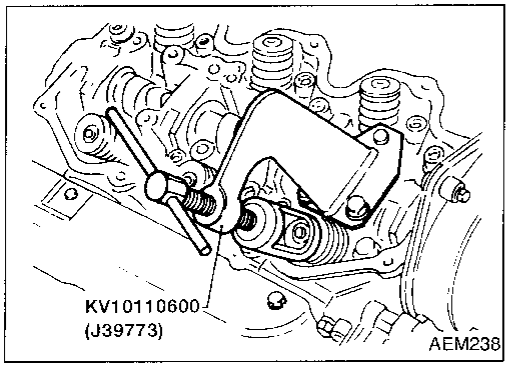

5. Remove valve components using Tool.
6. Remove valve oil seals. Refer to EM-19.

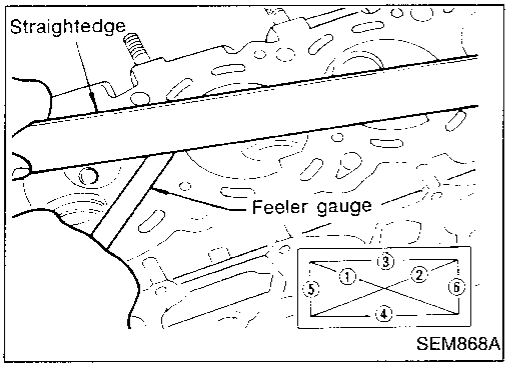

Inspection

CYLINDER HEAD DISTORTION

- Clean surface of cylinder head.
- Use a reliable straightedge and feeler gauge to check the flatness of cylinder head surface.
- Check along six positions shown in figure.

Head surface flatness:

Less than 0.1 mm (0.004 in)

If beyond the specified limit, replace or resurface it.

Resurfacing limit:

The limit for cylinder head resurfacing is determined by the amount of cylinder block resurfacing.
Amount of cylinder head resurfacing is "A".
Amount of cylinder block resurfacing is "B".

The maximum limit is as follows:

A + B = 0.2 mm (0.008 in)

After resurfacing cylinder head, check that camshaft rotates freely by hand. If resistance is felt, cylinder head must be replaced.

Nominal cylinder head height:

106.8 - 107.2 mm (4.205 - 4.220 in)

CAMSHAFT VISUAL CHECK

Check camshaft for scratches, seizure and wear.

Inspection (Cont'd)

CAMSHAFT RUNOUT

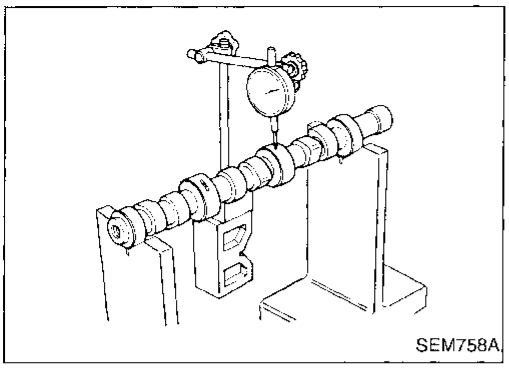

1. Measure camshaft runout at the center journal.
   Runout (Total indicator reading):
   Standard
   Less than 0.04 mm (0.0016 in)
   Limit
   0.1 mm (0.004 in)
2. If it exceeds the limit, replace camshaft.

CAMSHAFT CAM HEIGHT

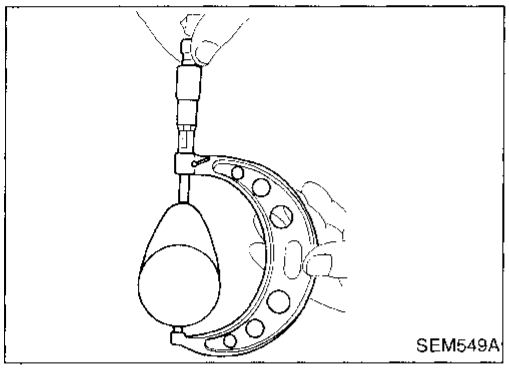

1. Measure camshaft cam height.
   Standard cam height:
   38.943 - 39.133 mm (1.5332 - 1.5407 in)
   Cam height wear limit:
   0.15 mm (0.0059 in)
2. If wear is beyond the limit, replace camshaft.

CAMSHAFT JOURNAL CLEARANCE

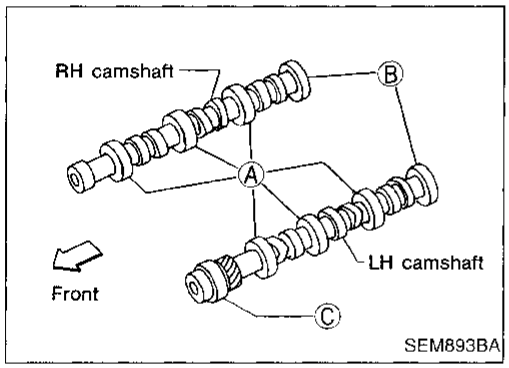

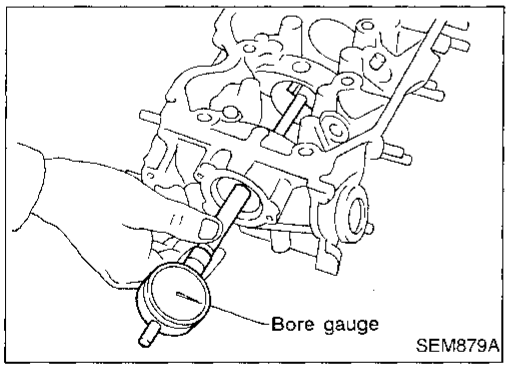

1. Measure inner diameter of camshaft bearing.
   Standard inner diameter:
   A 47.000 - 47.025 mm (1.8504 - 1.8514 in)
   B 42.500 - 42.525 mm (1.6732 - 1.6742 in)
   C 48.000 - 48.025 mm (1.8898 - 1.8907 in)

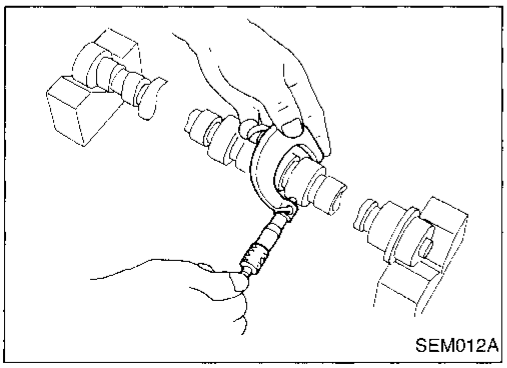

2. Measure outer diameter of camshaft journal.
   Standard outer diameter:
   A 46.920 - 46.940 mm (1.8472 - 1.8480 in)
   B 42.420 - 42.440 mm (1.6701 - 1.6709 in)
   C 47.920 - 47.940 mm (1.8866 - 1.8874 in)

Inspection (Cont'd)

3. If clearance exceeds the limit, replace camshaft and re-measure camshaft journal clearance.
   Camshaft journal clearance = Standard inner diameter – Standard outer diameter:
   Standard
   0.045 - 0.090 mm (0.0018 - 0.0035 in)
   Limit
   0.15 mm (0.0059 in)

- If clearance still exceeds the limit after replacing camshaft, replace cylinder head.

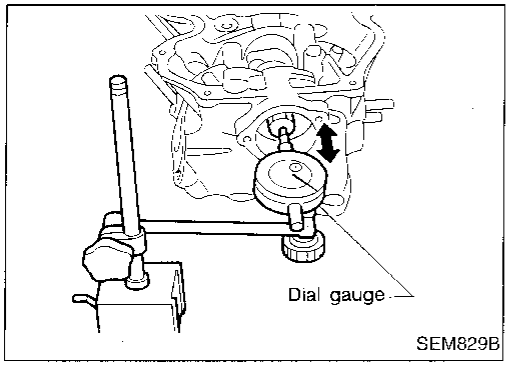

CAMSHAFT END PLAY

1. Install camshaft and locate plate in cylinder head.
2. Measure camshaft end play.
   Camshaft end play:
   Standard 0.03 - 0.06 mm (0.0012 - 0.0024 in)

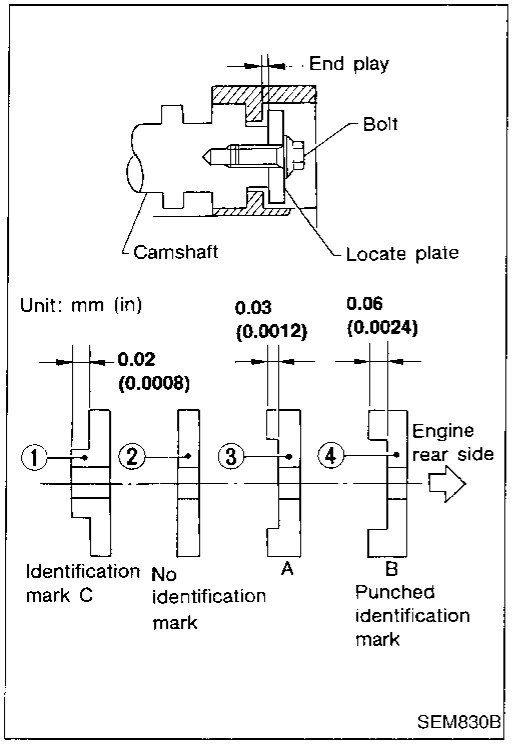

3. If it is out of the specified range, select thickness of camshaft locate plate to obtain standard specified end play.
   Example:
   When camshaft end play is 0.08 mm (0.0031 in) with camshaft locate plate ②, replace camshaft locate plate ② with camshaft locate plate ③ to set the end play at 0.05 mm (0.0020 in).

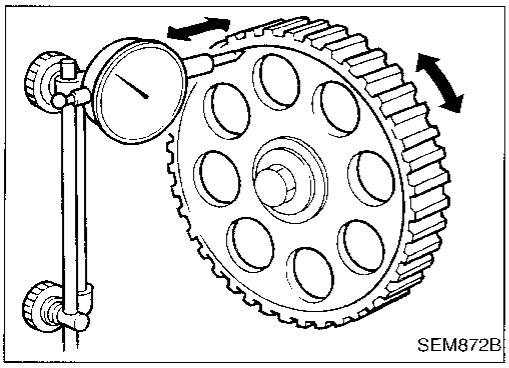

CAMSHAFT SPROCKET RUNOUT

1. Install sprocket on camshaft.
2. Measure camshaft sprocket runout.
   Runout (Total indicator reading):
   Limit 0.1 mm (0.004 in)
3. If it exceeds the limit, replace camshaft sprocket.

Inspection (Cont'd)

VALVE GUIDE CLEARANCE

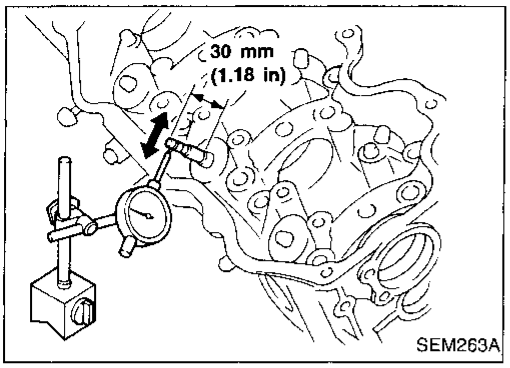

1. Measure valve deflection as shown in illustration. (Valve and valve guide mostly wear in this direction.)
   Valve deflection limit (Dial gauge reading):
   0.20 mm (0.0079 in)

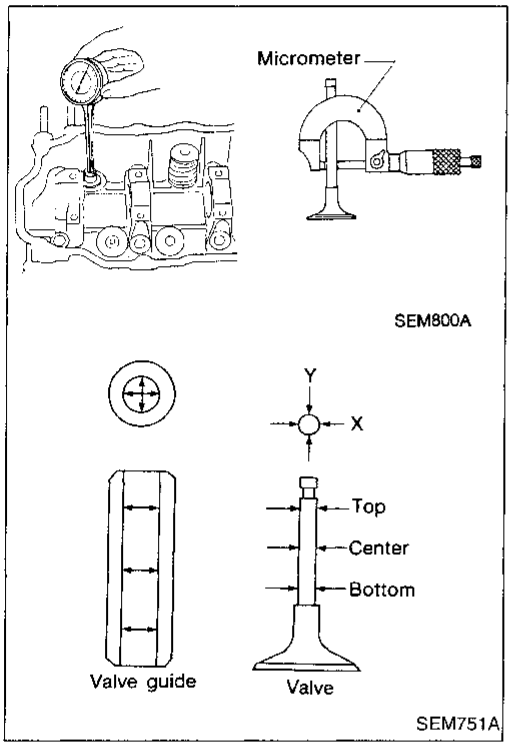

2. If it exceeds the limit, check valve to valve guide clearance.

a. Measure valve stem diameter and valve guide inner diameter.

b. Calculate valve to valve guide clearance.
   Valve to valve guide clearance = Valve guide inner diameter – Valve stem diameter:
   Intake
   0.020 - 0.053 mm (0.0008 - 0.0021 in)
   Exhaust
   0.040 - 0.073 mm (0.0016 - 0.0029 in)
   Limit
   0.10 mm (0.0039 in)

c. If it exceeds the limit, replace valve and remeasure clearance.

- **If clearance still exceeds the limit after replacing valve, replace valve guide.**

Inspection (Cont'd)

VALVE GUIDE REPLACEMENT

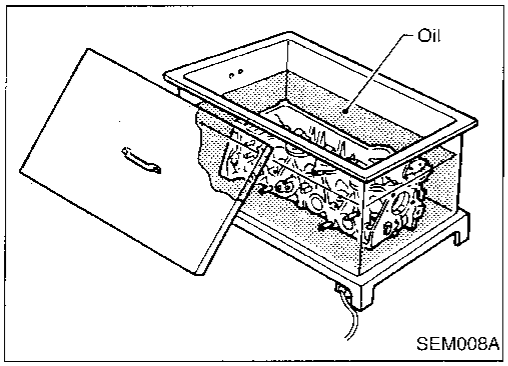

1. To remove valve guide, heat cylinder head to 150 to 160°C (302 to 320°F).

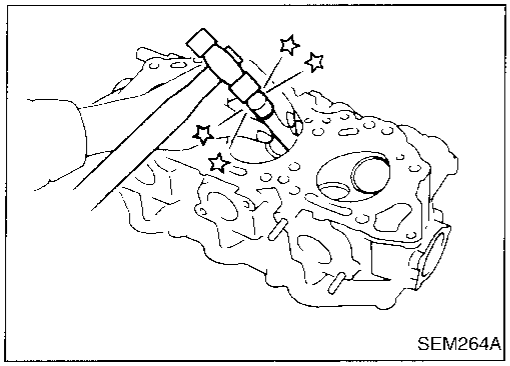

2. Drive out valve guide using a hammer and suitable tool or a press [under a 20 kN (2 ton, 2.2 US ton, 2.0 Imp ton) pressure].

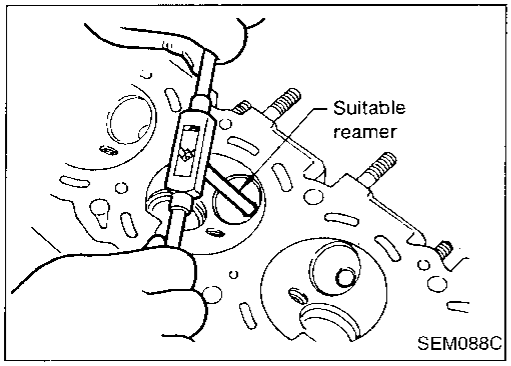

3. Ream cylinder head valve guide hole.
   Valve guide hole diameter (for service parts):
   - **Intake**
     11.175 - 11.196 mm (0.4400 - 0.4408 in)
   - **Exhaust**
     12.175 - 12.196 mm (0.4793 - 0.4802 in)

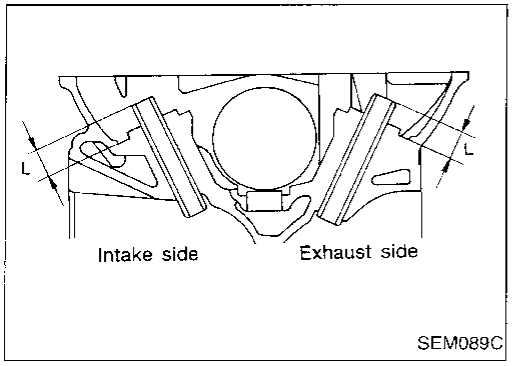

4. Heat cylinder head to 150 to 160°C (302 to 320°F) and press service valve guide into cylinder head.
   Projection "L":
   13.2 - 13.4 mm (0.520 - 0.528 in)

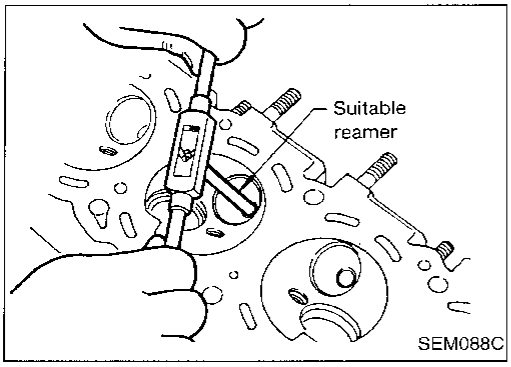

5. Ream valve guide.
   Finished size:
   - **Intake**
     7.000 - 7.018 mm (0.2756 - 0.2763 in)
   - **Exhaust**
     8.000 - 8.011 mm (0.3150 - 0.3154 in)

Inspection (Cont'd)

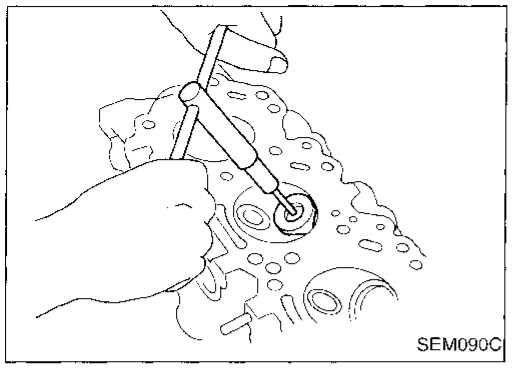

VALVE SEATS

Check valve seats for pitting at contact surface. Resurface or replace if excessively worn.

- **Before repairing valve seats, check valve and valve guide for wear. If they have worn, replace them. Then correct valve seat.**
- **Use both hands to cut uniformly.**

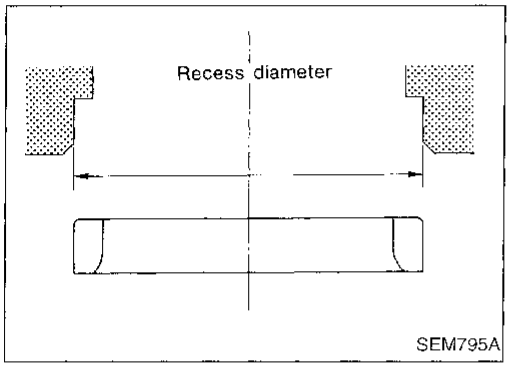

REPLACING VALVE SEAT FOR SERVICE PARTS

1. Bore out old seat until it collapses. Set machine depth stop so that bore cannot contact bottom face of seat recess in cylinder head.
2. Ream cylinder head recess.
   Reaming bore for service valve seat
   Oversize [0.5 mm (0.020 in)]:
   Intake 44.500 - 44.516 mm (1.7520 - 1.7526 in)
   Exhaust 37.500 - 37.516 mm (1.4764 - 1.4770 in)

Use the valve guide center for reaming to ensure that the valve seat will have the correct fit.

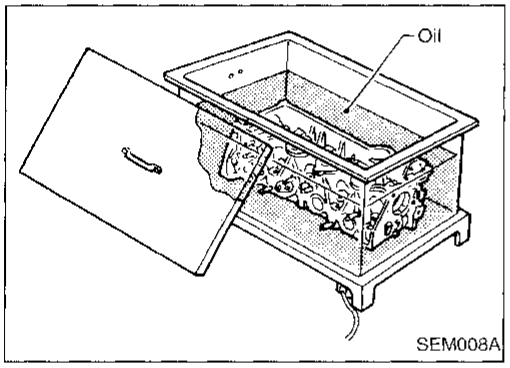

3. Heat cylinder head to 150 to 160°C (302 to 320°F).
4. Press fit valve seat until it seats on the bottom.

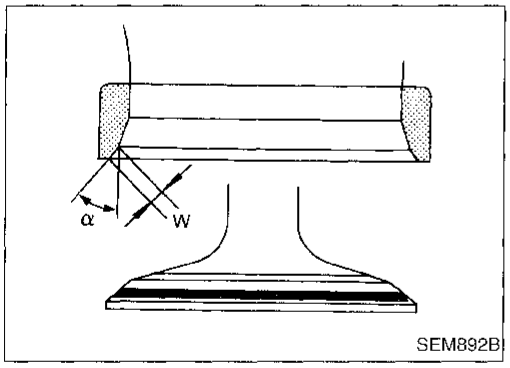

5. Cut or grind valve seat using suitable tool at the specified dimensions. Refer to SDS, EM-53.
6. After cutting, lap valve seat with abrasive compound.
7. Check valve seating condition.

		Intake	Exhaust
Seat face angle "α"	degree	45	45
Contacting width "W"	mm (in)	1.75 (0.0689)	1.7 (0.067)

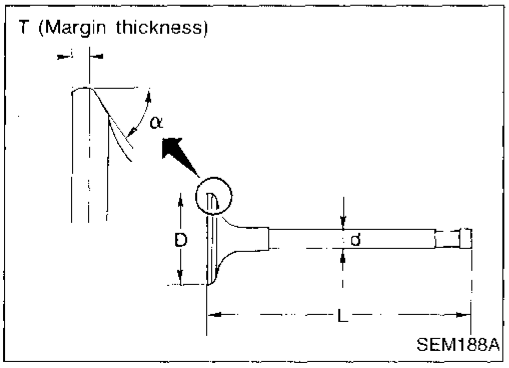

VALVE DIMENSIONS

Check dimensions in each valve. Refer to SDS, EM-52. When valve head has been worn down to 0.5 mm (0.020 in) in margin thickness, replace valve.

Grinding allowance for valve stem tip is 0.2 mm (0.008 in) or less.

Inspection (Cont'd)

VALVE SPRING

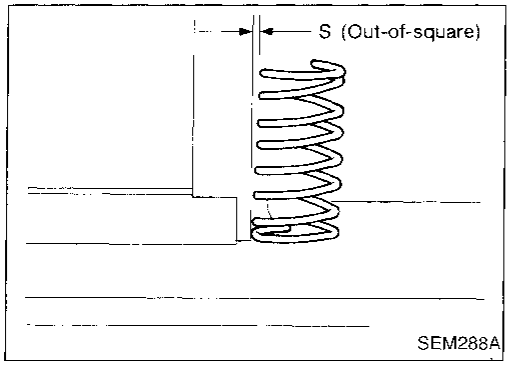

Squareness

1. Measure dimension "S".
   Out-of-square "S":
   Outer
   Less than 2.2 mm (0.087 in)
   Inner
   Less than 1.9 mm (0.075 in)
2. If it exceeds the limit, replace spring.

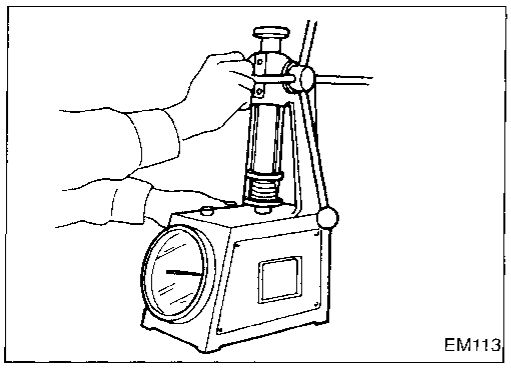

Pressure

Check valve spring pressure at specified spring height.

Pressure: N (kg, lb) at height mm (in)
Standard
Outer 523.7 (53.4, 117.7) at 30.0 (1.181)
Inner 255.0 (26.0, 57.3) at 25.0 (0.984)
Limit
Outer More than 228.5 (23.3, 51.4) at 25.0 (0.984)
Inner More than 225.6 (23.0, 50.7) at 25.0 (0.984)

If it exceeds the limit, replace spring.

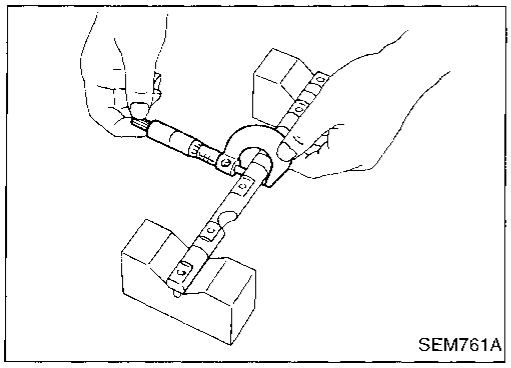

ROCKER SHAFT AND ROCKER ARM

1. Check rocker shafts for scratches, seizure and wear.
2. Check outer diameter of rocker shaft.
   Diameter:
   17.979 - 18.000 mm (0.7078 - 0.7087 in)

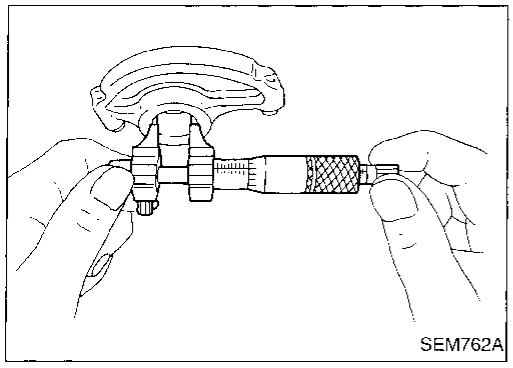

3. Check inner diameter of rocker arm.
   Diameter:
   18.007 - 18.028 mm (0.7089 - 0.7098 in)
   Rocker arm to shaft clearance = Inner diameter of rocker arm – Outer diameter of rocker shaft:
   0.007 - 0.049 mm (0.0003 - 0.0019 in)

- **Keep rocker arm with hydraulic valve lifter in upright position. This will prevent air from entering hydraulic valve lifter when checking rocker arm inner diameter.**

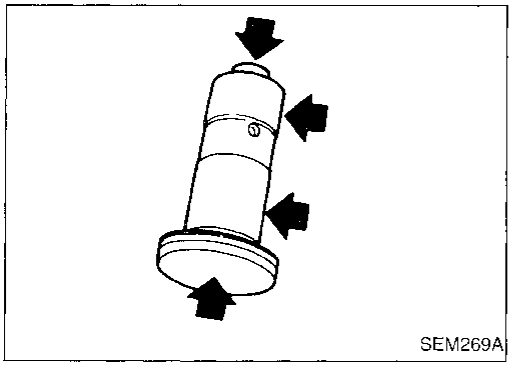

HYDRAULIC VALVE LIFTER

1. Check contact and sliding surfaces for wear and scratches.

- **When removing valve lifters from lifter guide, note their original position for reassembly.**

Inspection (Cont'd)

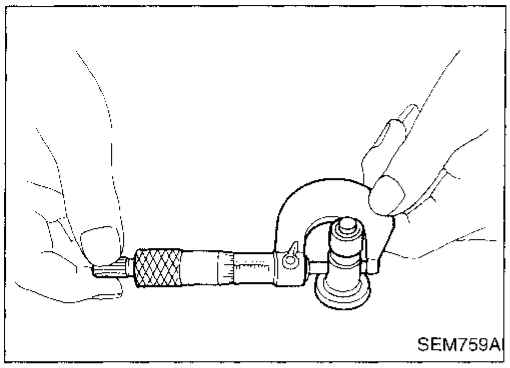

2. Check diameter of valve lifter.
   Outer diameter:
   15.947 - 15.957 mm (0.6278 - 0.6282 in)

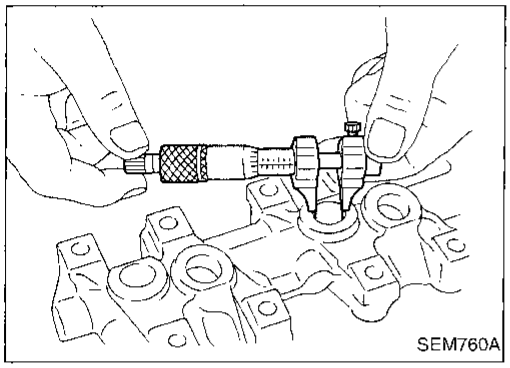

3. Check valve lifter guide inner diameter.
   Inner diameter:
   16.000 - 16.013 mm (0.6299 - 0.6304 in)
   Standard clearance between valve lifter and lifter guide = Lifter guide inner diameter – Valve lifter outer diameter:
   0.043 - 0.066 mm (0.0017 - 0.0026 in)

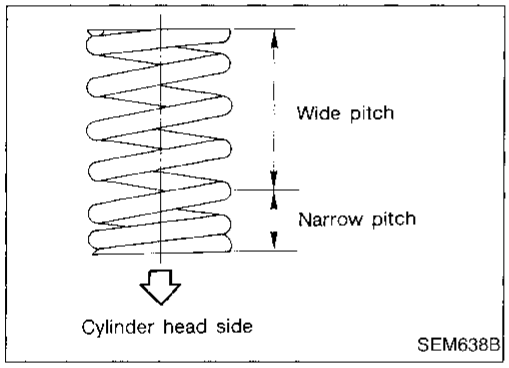

Assembly

1. Install valve component parts.
- **Always use new valve oil seal. Refer to EM-19.**
- **Before installing valve oil seal, install inner valve spring seat.**
- **Install outer valve spring (uneven pitch type) with narrow pitch side toward cylinder head.**
- **After installing valve component parts, use plastic hammer to lightly tap valve stem tip to assure a proper fit.**

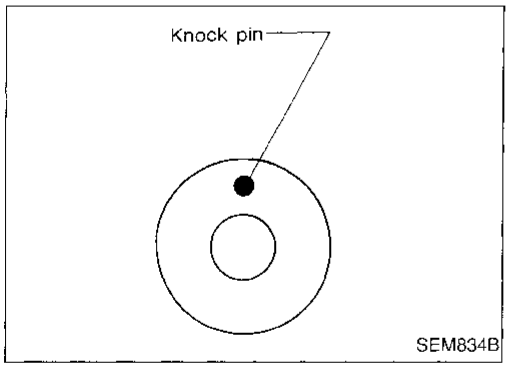

2. Install camshafts, locate plates and cylinder head rear covers.
- **Set camshaft knock pin at the top as shown.**

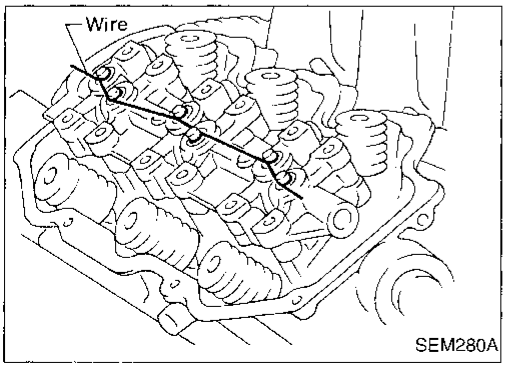

3. Install valve lifters into valve lifter guide.
- **Assemble valve lifters in their original positions. Hold all valve lifters with wire so they will not drop from lifter guide.**
- **After setting valve lifter guide in place, remove the wire.**

Assembly (Cont'd)

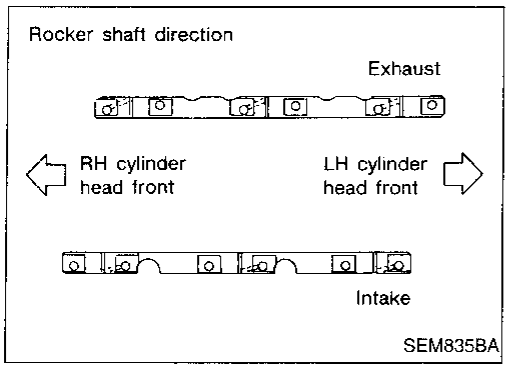

4. Install rocker shafts with rocker arms.
- **Tighten bolts gradually in two or three steps.**
- **Before tightening, be sure to set the camshaft lobe at the position where valve is not lifted.**

a. Set No. 1 piston at TDC of its compression stroke and tighten rocker shaft bolts for No. 2, No. 4 and No. 6 cylinders.
b. Set No. 4 piston at TDC of its compression stroke and tighten rocker shaft bolts for No. 1, No. 3 and No. 5 cylinders.
5. Install exhaust manifold to cylinder head in reverse order of removal.

Installation

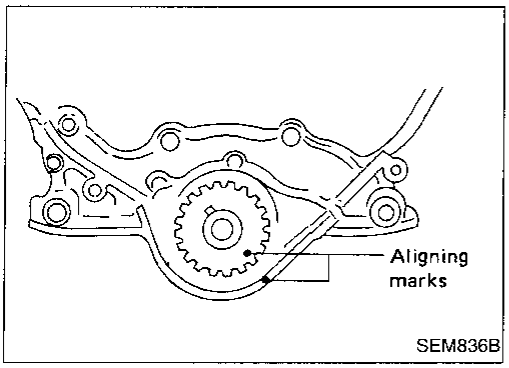

1. Set No. 1 piston at TDC of its compression stroke as follows:
a. Align crankshaft sprocket aligning mark with mark on oil pump body.
b. Confirm that camshaft knock pin is set at the top.

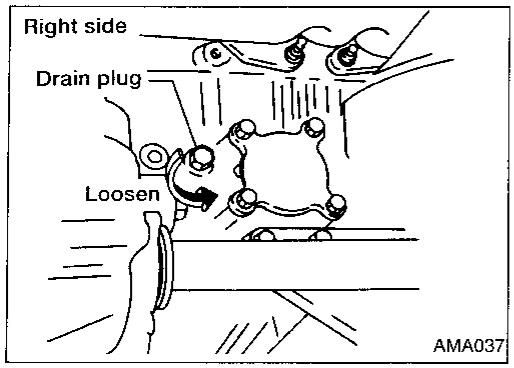

2. Install both drain plugs.
- **Apply sealant to drain plug threads.**

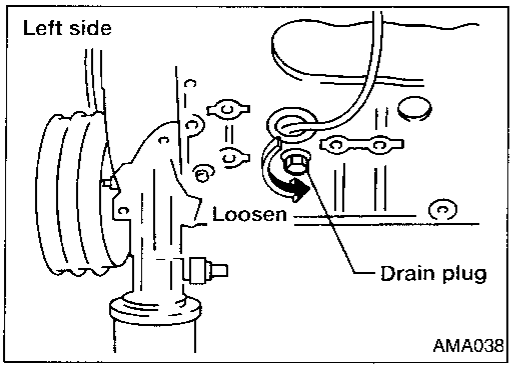

Installation (Cont'd)

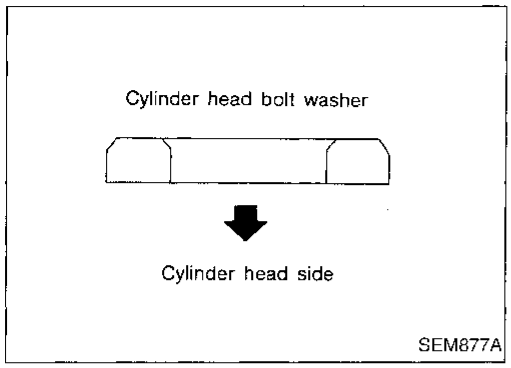

3. Install cylinder head with new gasket.
- **Be sure to install washers between bolts and cylinder head.**
- **Apply engine oil to threads and seating surfaces of cylinder head bolts before installing them.**

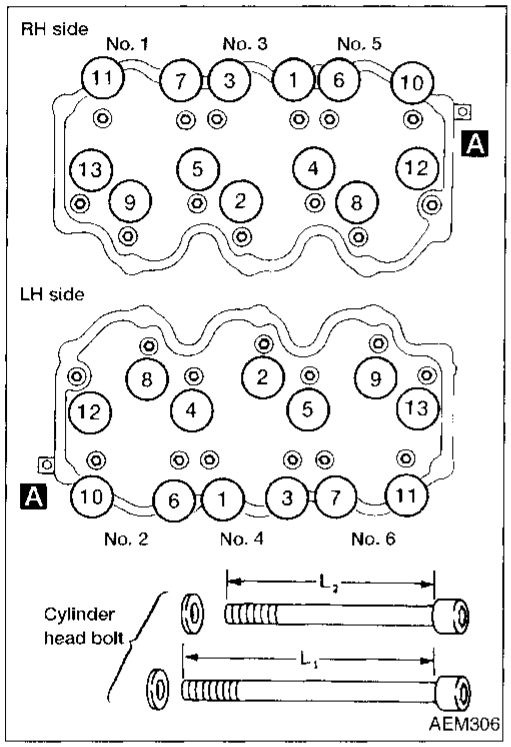

4. Tighten cylinder head bolts in numerical order using Tool ST10120000 (J24239-01).
- **Tightening procedure:**

a. Tighten all bolts to 29 N·m (3.0 kg-m, 22 ft-lb).
b. Tighten all bolts to 59 N·m (6.0 kg-m, 43 ft-lb).
c. Loosen all bolts completely.
d. Tighten all bolts to 29 N·m (3.0 kg-m, 22 ft-lb).
e. Turn all bolts 60 to 65 degrees clockwise.
If an angle wrench is not available, tighten all bolts to 54 to 64 N·m (5.5 to 6.5 kg-m, 40 to 47 ft-lb).

- **Bolts for ④, ⑤, ⑫ and ⑬ are longer than the others.**
  L_1: 127 mm (5.00 in) for ④, ⑤, ⑫ and ⑬
  L_2: 106 mm (4.17 in) for others

5. Tighten cylinder head bolt **A** to 9 - 12 N·m (0.9 - 1.2 kg-m, 78 - 104 in-lb) using Tool ST10120000 (J24239-01).

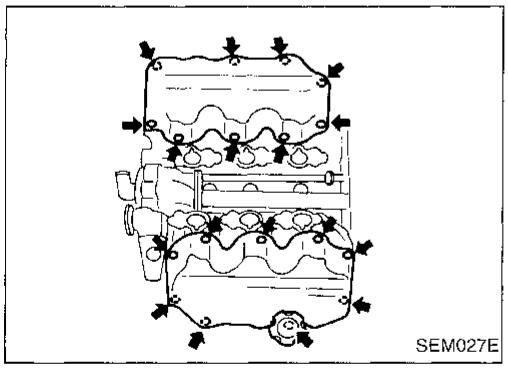

6. Install both rocker covers.

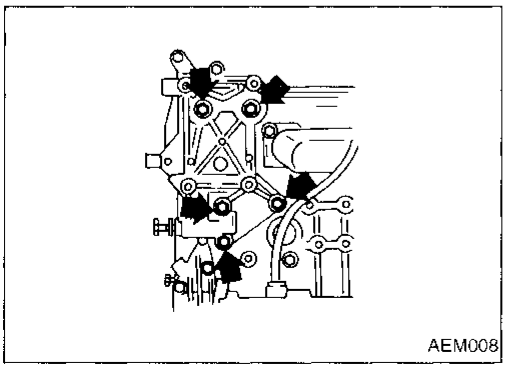

7. Install air conditioning compressor bracket and compressor.

Installation (Cont'd)

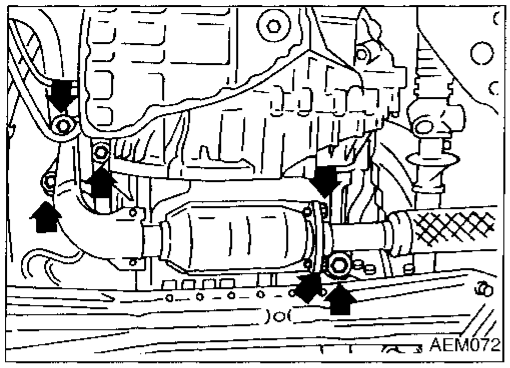

8. Install front exhaust tube to exhaust manifold.

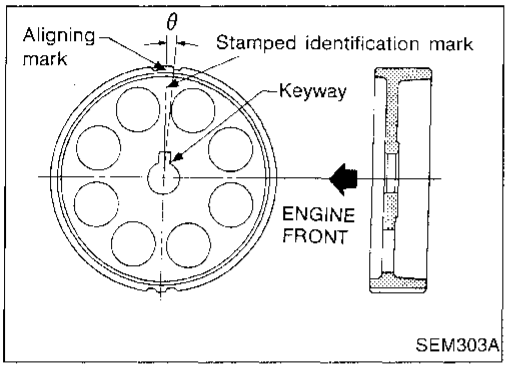

9. Install rear timing belt cover and camshaft sprocket.

- **RH camshaft sprocket and LH camshaft sprocket are different parts. Be sure to install them in the correct location.**

	Identification mark	θ
RH camshaft sprocket	R3	0°53′
LH camshaft sprocket	L3	−3°27′

10. Install timing belt and adjust belt tension.
Refer to EM-15.

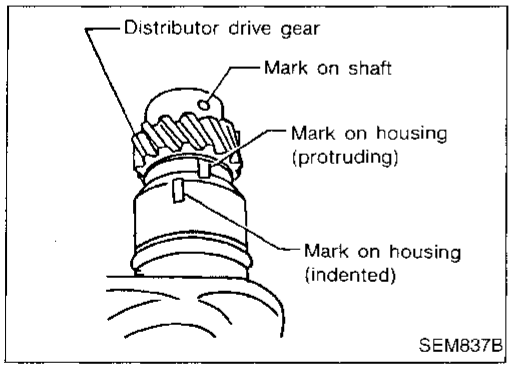

11. Install distributor.
a. Align mark on shaft with protruding mark on housing.

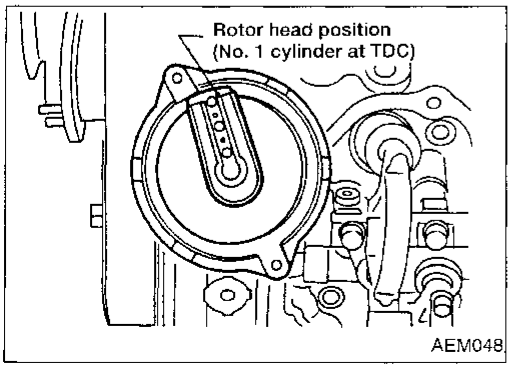

b. After installing, confirm that distributor rotor head is set as shown in figure.

Installation (Cont'd)

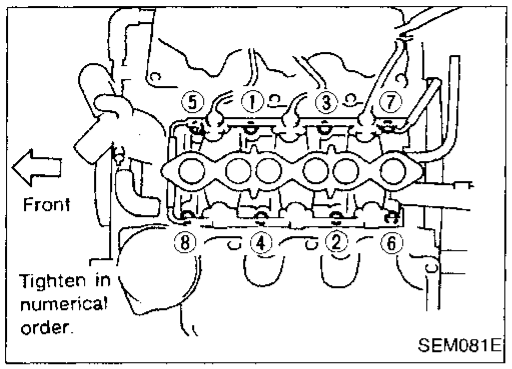

12. Install intake manifold.

- **Tightening procedure**
  STEP 1: Tighten bolts and nuts ① - ⑧ in numerical order
  [O]: 3 - 5 N·m (0.3 - 0.5 kg-m, 22 - 3.6 ft-lb)
  STEP 2: Tighten bolts and nuts in the specified order
  [O]: bolts 13 - 17 N·m (1.3 - 1.7 kg-m, 9 - 12 ft-lb)
  nuts 24 - 27 N·m (2.4 - 2.8 kg-m, 17 - 20 ft-lb)
  STEP 3: Retighten bolts and nuts in the specified order
  [O]: Same as those of step 2.
  Install all parts which were removed or disconnected in step 6 on EM-22.

13. Install intake manifold collector.
    Install all parts which were removed or disconnected in step 5 on EM-22.
14. Install ASCD and accelerator control wire.
15. Check hydraulic valve lifter.

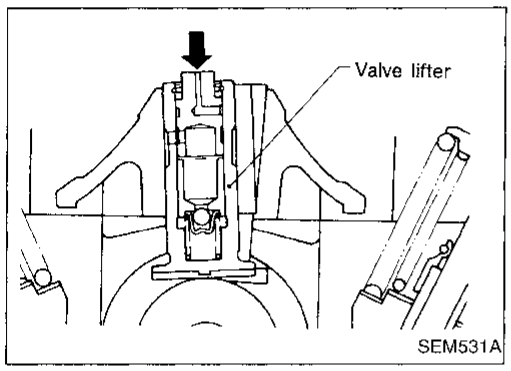

a. Push plunger forcefully with your finger.

- **Be sure rocker arm is in its free position (not on camshaft lobe).**

b. If valve lifter moves more than 1 mm (0.04 in), air may be inside it.
c. Bleed air off by running engine at 1,000 rpm under no load for about 10 minutes.
d. If hydraulic valve lifters are still noisy, replace them and bleed air off again as in step 15 (c).

SEC. 112

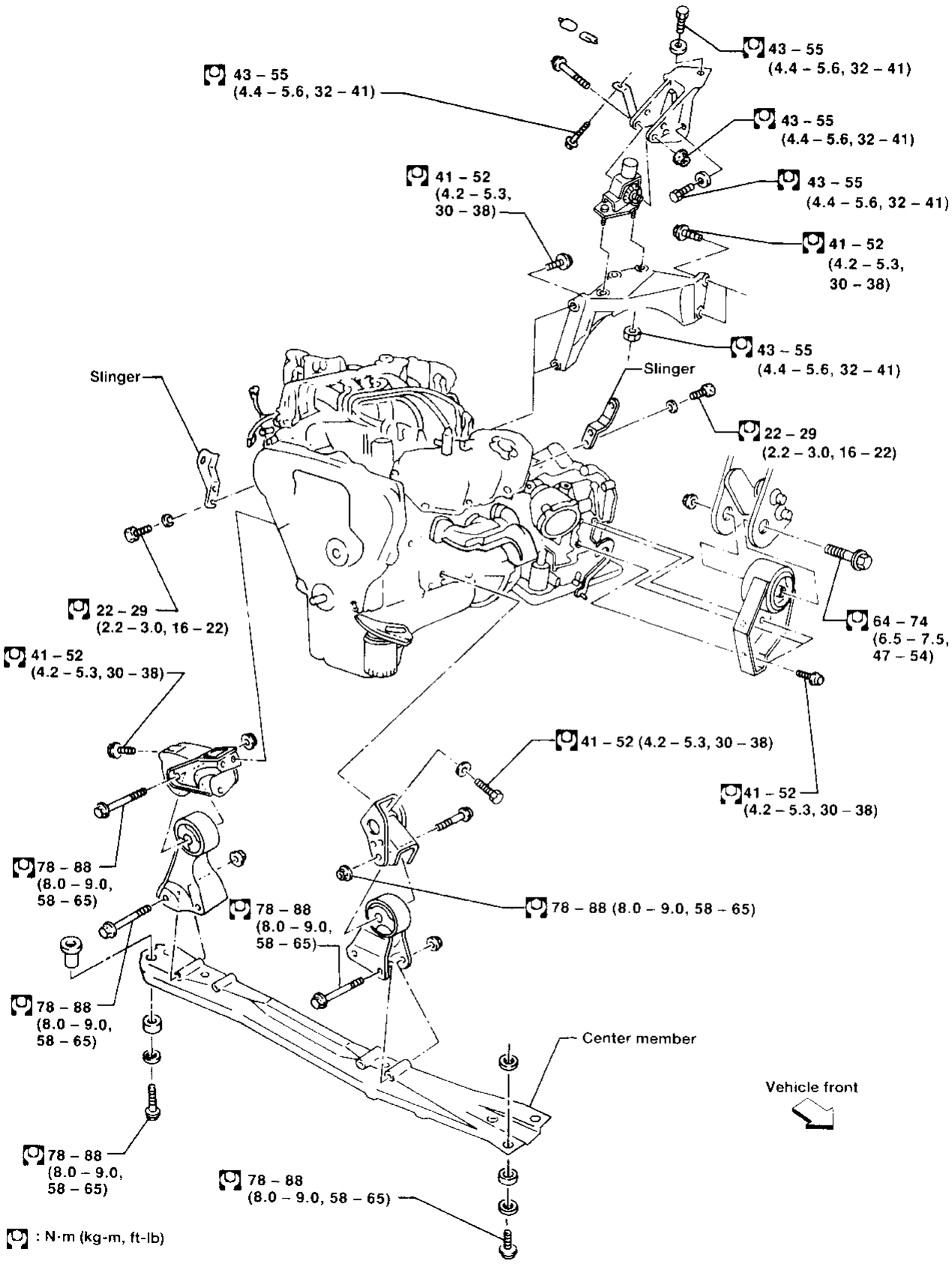

AEM215

WARNING:

- **Position vehicle on a flat and solid surface.**
- **Place chocks at front and back of rear wheels.**
- **Do not remove engine until exhaust system has completely cooled off.**
  Otherwise, you may burn yourself and/or fire may break out in fuel line.
- **Before disconnecting fuel hose, release fuel pressure. Refer to EC section ("Fuel Pressure Release", "BASIC SERVICE PROCEDURE").**
- **Before removing front axle from transaxle, place safety stands under designated front supporting points. Refer to GI section ("LIFTING POINTS AND TOW TRUCK TOWING").**
- **Be sure to lift engine and transaxle in a safe manner.**
- **For engines not equipped with engine slingers, attach proper slingers and bolts described in PARTS CATALOG.**

CAUTION:

- **When lifting engine, be sure to clear surrounding parts. Take special care near accelerator wire casing, brake lines and brake master cylinder.**
- **In lifting the engine, always use engine slingers in a safe manner.**
- **In removing drive shaft, be careful not to damage grease seal of transaxle.**
- **Before separating engine and transaxle, remove the crankshaft position sensor (OBD) from the assembly.**
- **Always take extra care not to damage edge of crankshaft position sensor (OBD) or ring gear teeth.**

Removal

1. Remove front wheels, engine under covers and side cover.
2. Drain coolant from cylinder block and radiator. Refer to MA section ("Changing Engine Coolant", "ENGINE MAINTENANCE").
3. Remove vacuum hoses, fuel hoses, wire harnesses and connectors.
4. Remove exhaust tube, ball joints and drive shafts.
5. Remove drive belts.
6. Remove generator, air conditioning compressor and power steering oil pump from engine.
7. Set a powertrain lift under engine and transaxle.
8. Remove LH rear engine mounting bolts.

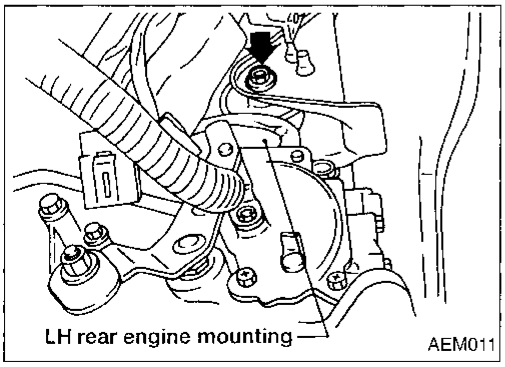

Removal (Cont'd)

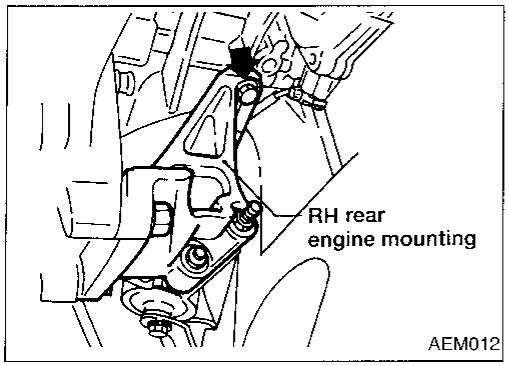

9. Remove RH rear engine mounting.
10. If equipped, remove the rear A/C refrigerant lines support bracket bolts.

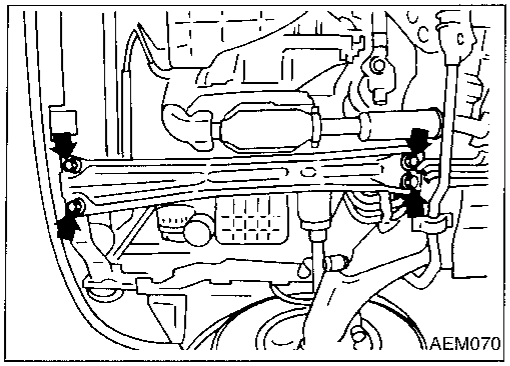

11. Remove center member bolts, then slowly lower powertrain lift.

12. Remove engine with transaxle as shown.

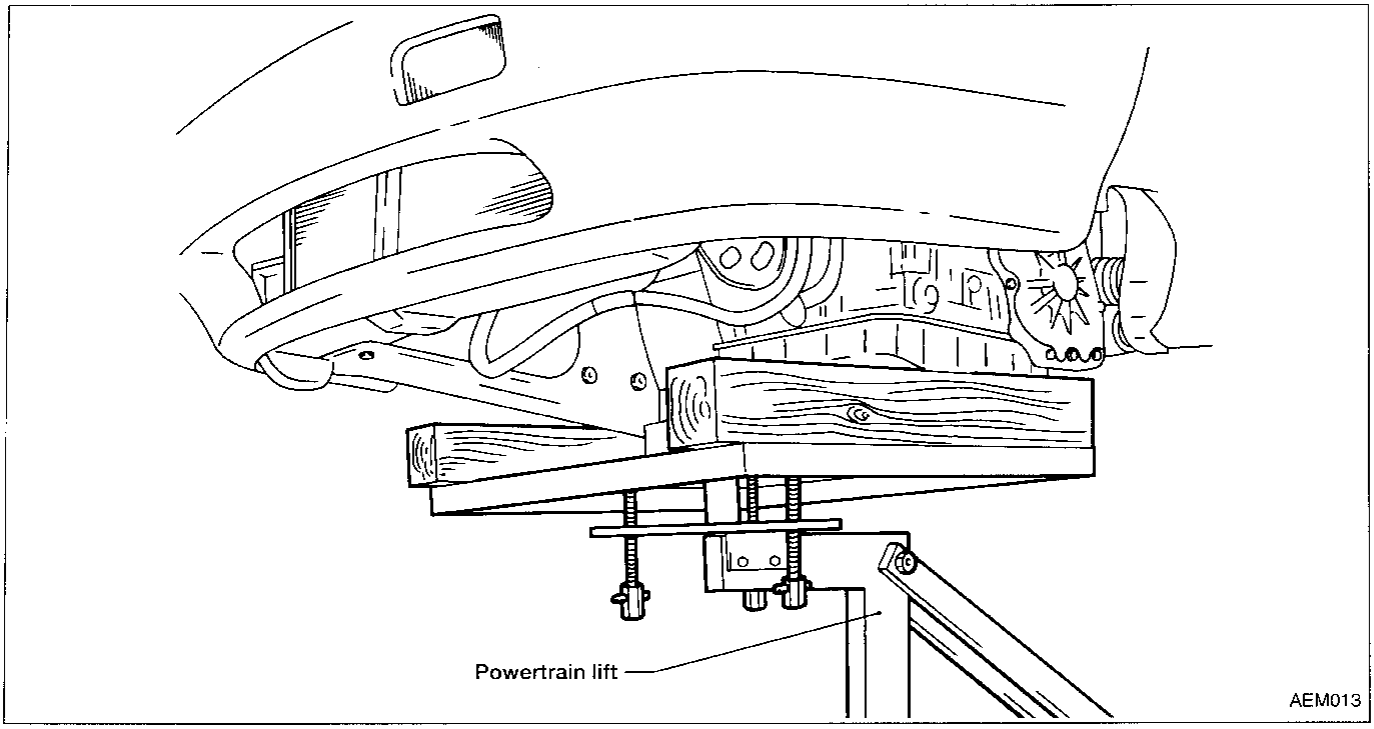

Installation

- Install in reverse order of removal.

SEC. 110 • 120 • 150

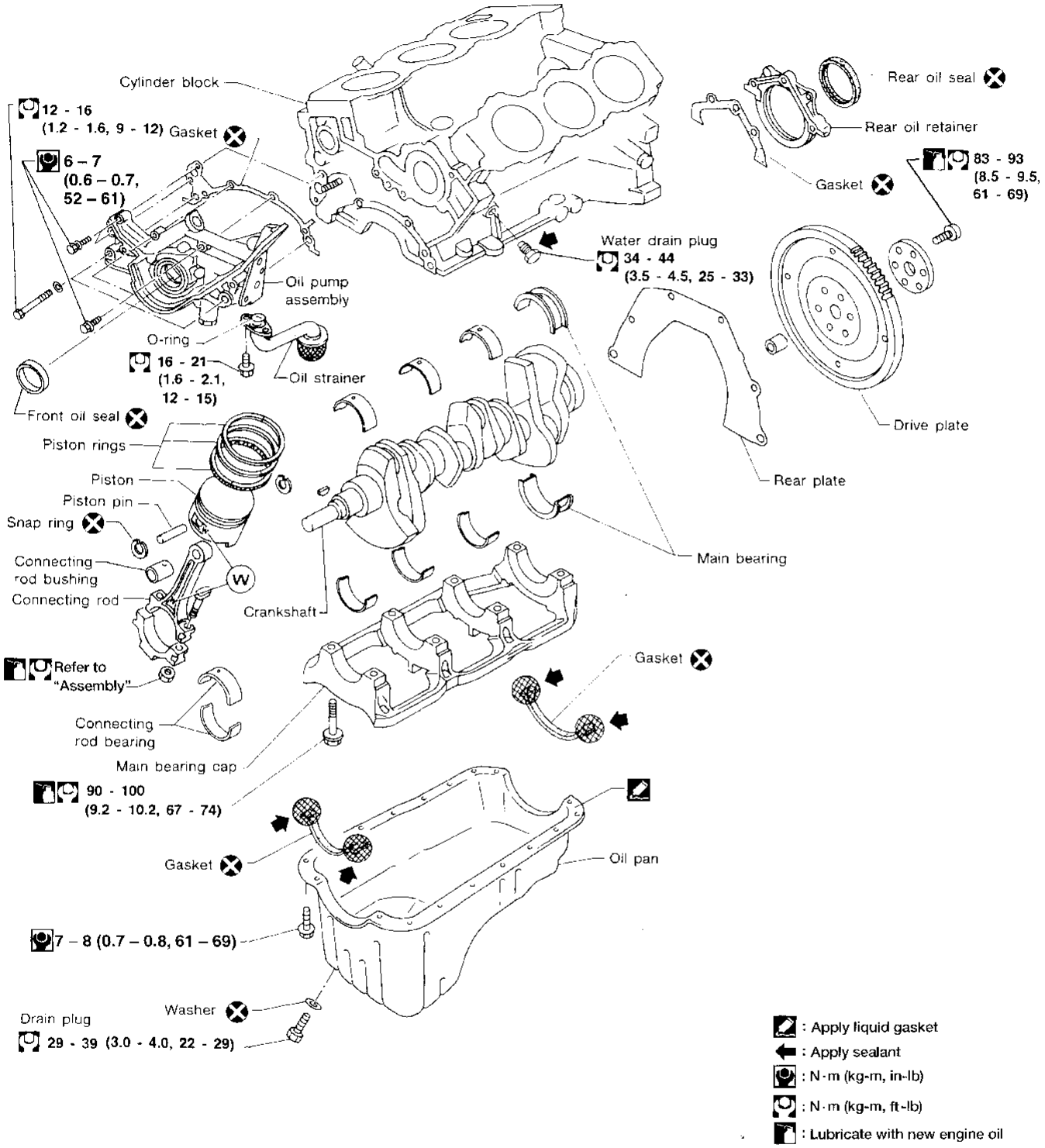

AEM216

CAUTION:
- **When installing sliding parts such as bearings and pistons, apply engine oil to the sliding surfaces.**
- **Place removed parts, such as bearings and bearing caps, in their proper order and direction.**
- **When installing connecting rod bolts and main bearing cap bolts, apply new engine oil to threads and seating surfaces of nuts.**
- **Do not allow any magnetic materials to contact the ring gear teeth of drive plate.**

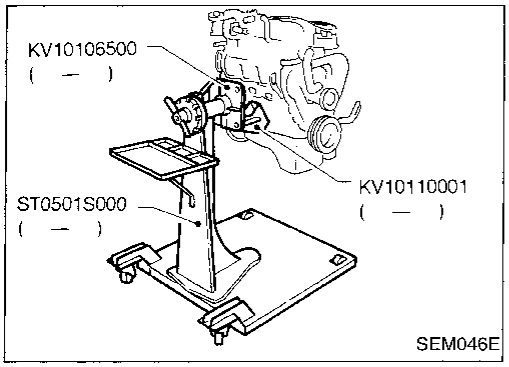

Disassembly

PISTON AND CRANKSHAFT

1. Place engine on a work stand.
2. Drain coolant and oil.
3. Remove timing belt.
4. Remove oil pan and oil pump.
5. Remove water pump.
6. Remove cylinder head.

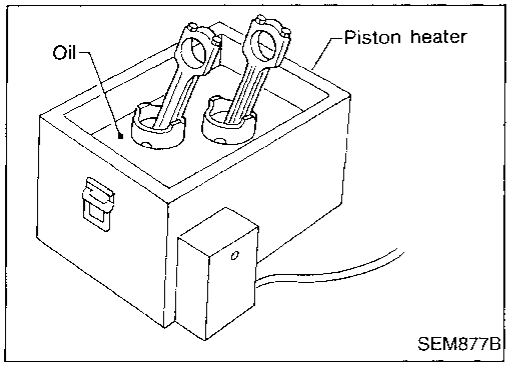

7. Remove pistons with connecting rod.
- To disassemble piston and connecting rod, remove snap ring first. Then heat piston to 60 to 70°C (140 to 158°F) and use piston pin press to remove pin.
- **When piston rings are not replaced, make sure that piston rings are mounted in their original positions.**
- **When replacing piston rings, if there is no punchmark, install with either side up.**

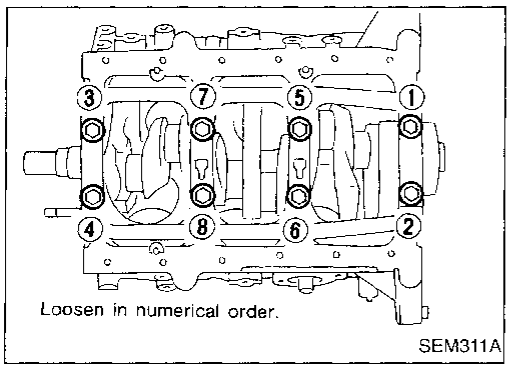

8. Remove bearing cap bolts and main bearing caps in the order shown, then remove crankshaft.
- **Loosen bolts in two or three steps.**

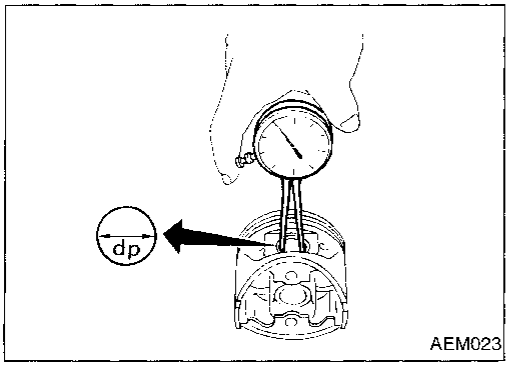

Inspection

PISTON AND PISTON PIN CLEARANCE

1. Measure inner diameter of piston pin hole "dp".
   Standard diameter "dp":
   20.969 - 20.975 mm (0.8255 - 0.8258 in)

Inspection (Cont'd)

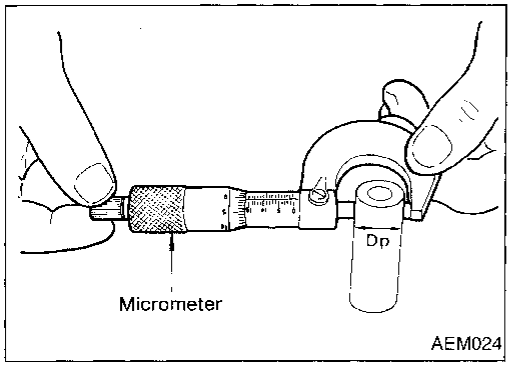

2. Measure outer diameter of piston pin "Dp".
   Standard diameter "Dp":
   20.971 - 20.983 mm (0.8256 - 0.8261 in)
3. Calculate piston pin clearance.
   dp – Dp = –0.004 to 0 mm (–0.0002 to 0 in)

If it exceeds the above value, replace piston assembly with pin.

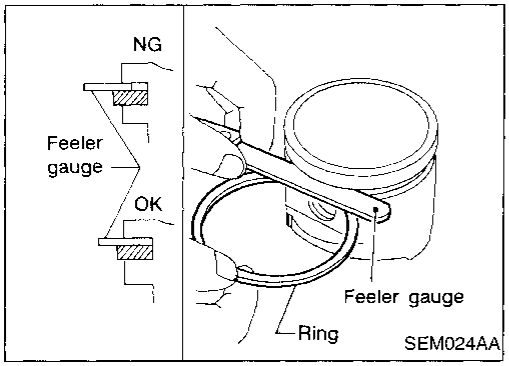

PISTON RING SIDE CLEARANCE

Side clearance:
Top ring
0.040 - 0.073 mm (0.0016 - 0.0029 in)
2nd ring
0.030 - 0.063 mm (0.0012 - 0.0025 in)
Max. limit of side clearance:
0.1 mm (0.004 in)

If out of specification, replace piston ring. If clearance exceeds maximum limit with new ring, replace piston.

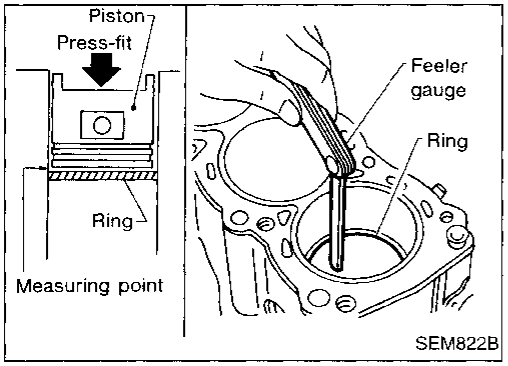

PISTON RING END GAP

End gap:
Top ring
0.21 - 0.44 mm (0.0083 - 0.0173 in)
2nd ring
0.18 - 0.44 mm (0.0071 - 0.0173 in)
Oil ring
0.20 - 0.76 mm (0.0079 - 0.0299 in)
Max. limit of ring gap:
1.0 mm (0.039 in)

If out of specification, replace piston ring. If gap still exceeds maximum limit with new ring, rebore cylinder and use oversized piston and piston rings. Refer to SDS, EM-55.

- **When replacing the piston, check cylinder block surface for scratches or seizure. If scratches or seizure are found, hone or replace the cylinder block.**

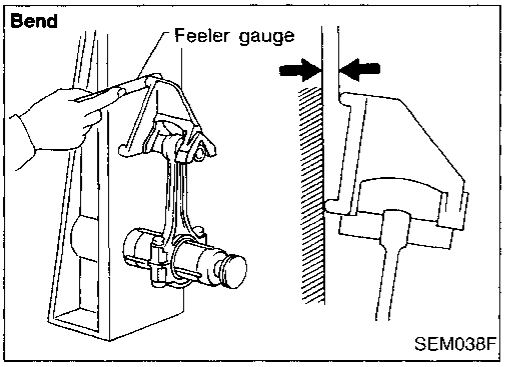

CONNECTING ROD BEND AND TORSION

Bend:
Limit 0.10 mm (0.0039 in)
per 100 mm (3.94 in) length
Torsion:
Limit 0.10 mm (0.0039 in)
per 100 mm (3.94 in) length

If it exceeds the limit, replace connecting rod assembly.

Inspection (Cont'd)

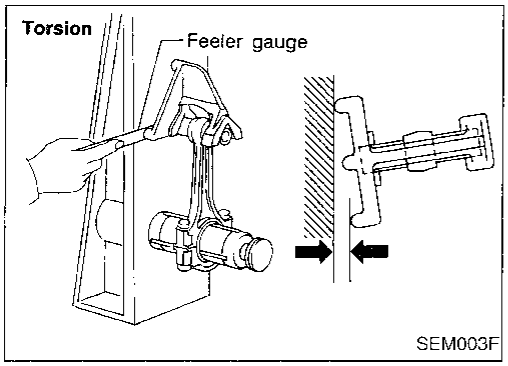

CYLINDER BLOCK DISTORTION AND WEAR

1. Clean upper surface of cylinder block. Using a reliable straightedge and feeler gauge, check the flatness of cylinder block surface.
- Check along six positions as shown in figure.
  Limit:
  0.10 mm (0.0039 in)
2. If out of specification, resurface it.
   The limit for cylinder block resurfacing is determined by the amount of cylinder head resurfacing.

Amount of cylinder head resurfacing is "A".
Amount of cylinder block resurfacing is "B".
The maximum limit is as follows:
A + B = 0.2 mm (0.008 in)
Nominal cylinder block height from crankshaft center:
227.60 - 227.70 mm (8.9606 - 8.9645 in)

3. If necessary, replace cylinder block.

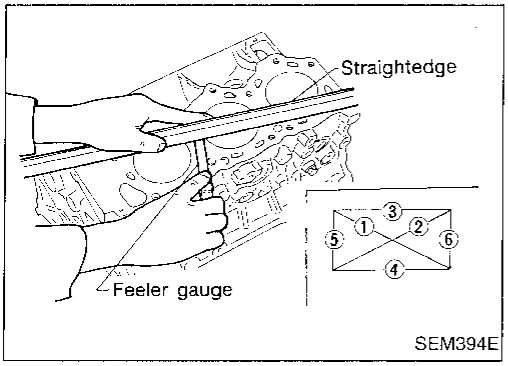

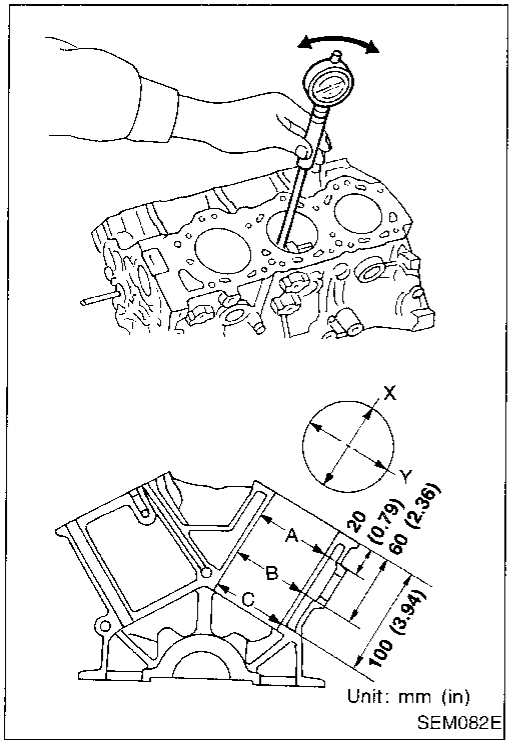

PISTON-TO-BORE CLEARANCE

1. Using a bore gauge, measure cylinder bore for wear, out-of-round and taper.
   Standard inner diameter "Db":
   87.000 - 87.030 mm (3.4252 - 3.4264 in)
   Wear limit:
   0.20 mm (0.0079 in)
   Out-of-round (X – Y):
   Less than 0.015 mm (0.0006 in)
   Taper (A-B or A-C):
   Less than 0.015 mm (0.0006 in)

If it exceeds the limit, rebore all cylinders. Replace cylinder block if necessary.

2. Check for scratches and seizure. If seizure is found, hone it.

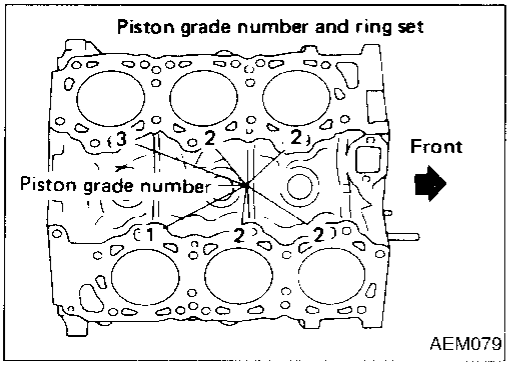

- **If cylinder block or piston is replaced, match piston grade with grade number on cylinder block upper surface.**

Inspection (Cont'd)

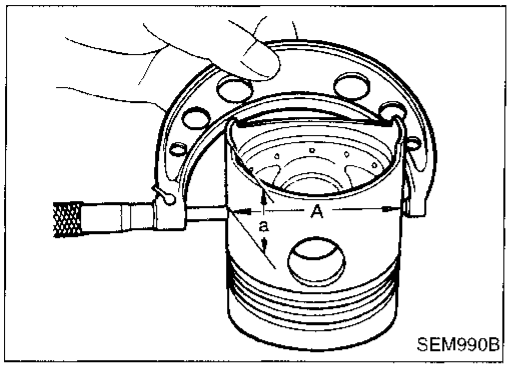

3. Measure piston skirt diameter.
   Piston diameter "A":
   Refer to SDS, EM-55.
   Measuring point "a" (Distance from the bottom):
   18 mm (0.71 in)
4. Check that piston-to-bore clearance is within specification.
   Piston-to-bore clearance "B" = Bore measurement "C" — Piston diameter "A":
   0.025 - 0.045 mm (0.0010 - 0.0018 in)
5. Determine piston oversize according to amount of cylinder wear.

Oversize pistons are available for service. Refer to SDS, EM-55.

6. Cylinder bore size is determined by adding piston-to-bore clearance to piston diameter "A".
   Rebored size calculation:
   D = A + B – C
   where,
   D: Bored diameter
   A: Piston diameter as measured
   B: Piston-to-bore clearance
   C: Honing allowance 0.02 mm (0.0008 in)

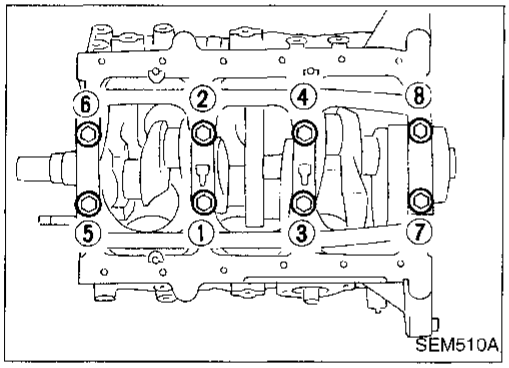

7. Install main bearing cap and tighten bolts to 90 to 100 N·m (9.2 to 10.2 kg-m, 67 to 74 ft-lb). This will prevent distortion of cylinder bores.
8. Cut cylinder bores.

- **When any cylinder needs boring, all other cylinders must also be bored.**
- **Do not cut too much out of cylinder bore at a time. Cut only 0.05 mm (0.0020 in) or so at a time.**

9. Hone cylinders to obtain specified piston-to-bore clearance.
10. Measure finished cylinder bore for out-of-round and taper.

- **Measurement should be done after cylinder bore cools down.**

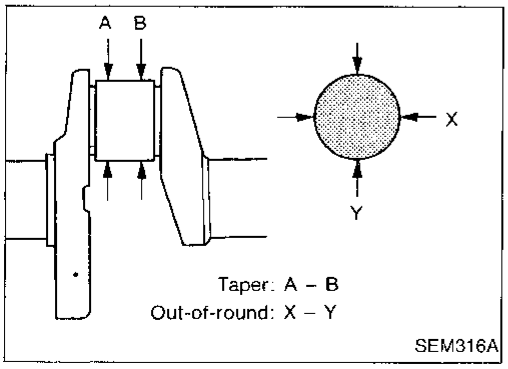

CRANKSHAFT

1. Check crankshaft main and pin journals for score, wear or cracks.
2. With a micrometer, measure journals for taper and out-of-round.
   Out-of-round (X – Y):
   Less than 0.005 mm (0.0002 in)
   Taper (A – B):
   Less than 0.005 mm (0.0002 in)

Inspection (Cont'd)

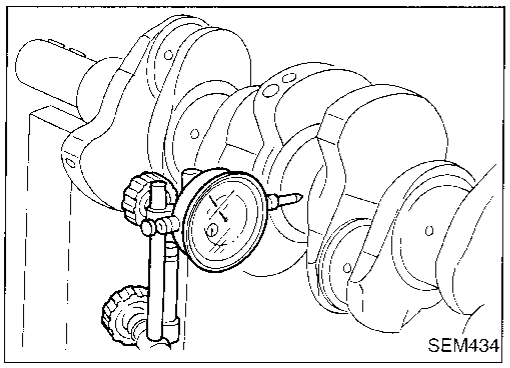
SEM434

3. Measure crankshaft runout.
   Runout (Total indicator reading):
   Standard Less than 0.025 mm (0.0010 in)
   Limit 0.10 mm (0.0039 in)

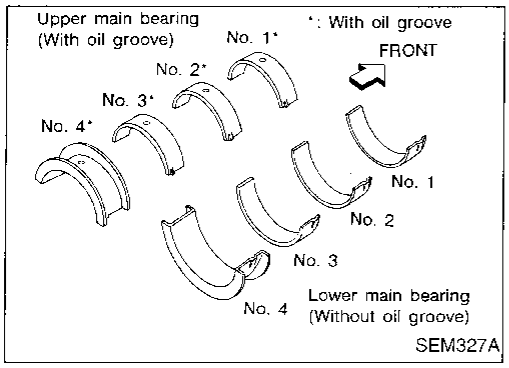

SEM327A

BEARING CLEARANCE

- Use Method A or Method B. Method A is preferred because it is more accurate.

Method A (Using bore gauge and micrometer)

Main bearing

1. Set main bearings in their proper positions on cylinder block and main bearing cap.

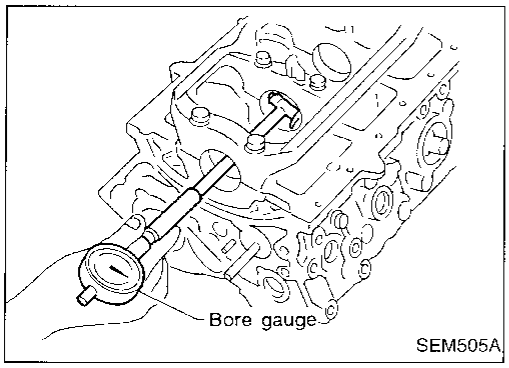

SEM505A

2. Install main bearing cap to cylinder block.
   Tighten all bolts in correct order in two or three stages. Refer to EM-49.
3. Measure inner diameter "A" of each main bearing.

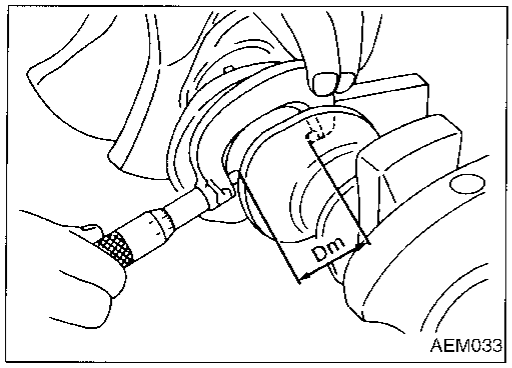

AEM033

4. Measure outer diameter "Dm" of each crankshaft main journal.
5. Calculate main bearing clearance.
   Main bearing clearance = A – Dm:
   Standard 0.028 - 0.055 mm (0.0011 - 0.0022 in)
   Limit 0.090 mm (0.0035 in)
   If it exceeds the limit, replace bearing.
- If clearance cannot be adjusted within the standard of any bearing, grind crankshaft journal and use undersized bearing.

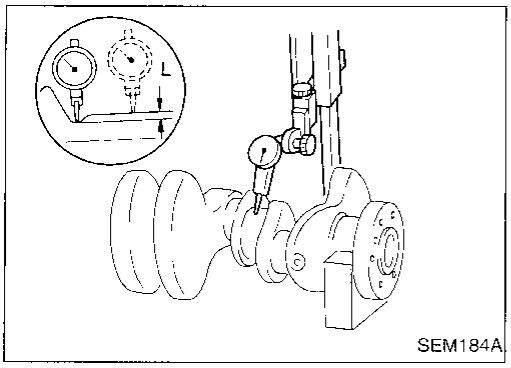

SEM184A

- **When grinding crankshaft journal, confirm that "L" dimension in fillet roll is more than the specified limit.**
  "L": 0.1 mm (0.004 in)
- **Refer to SDS, EM-56 for grinding crankshaft and available service parts.**

Inspection (Cont'd)

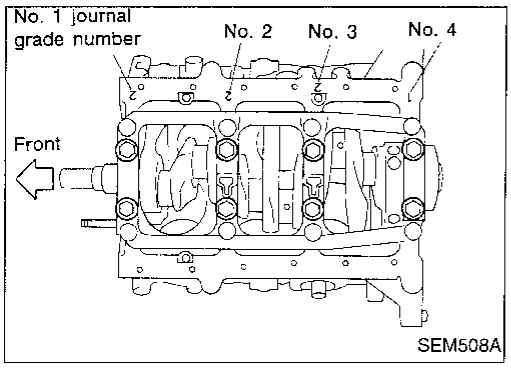

- If crankshaft or cylinder block is replaced, select thickness of main bearings as follows:

a. Grade number of each cylinder block main journal is punched on the respective cylinder block. These numbers are punched in either Arabic or Roman numerals.

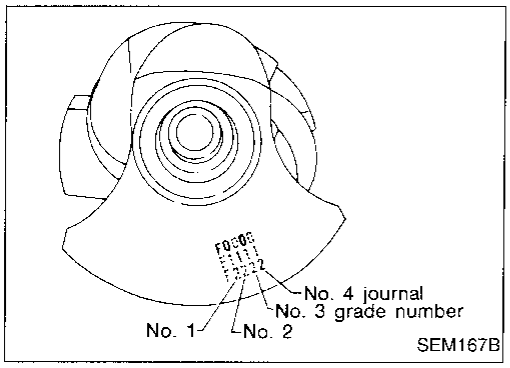

b. Grade number of each crankshaft main journal is punched on the respective crankshaft. These numbers are punched in either Arabic or Roman numerals.

c. Select main bearing with suitable thickness according to the following table.

Main bearing grade number:

Main journal grade number		0	1	2
Crankshaft journal grade number	0	0	1	2
	1	1	2	3
	2	2	3	4

For example:
Main journal grade number: 1
Crankshaft journal grade number: 2
Main bearing grade number = 1 + 2 = 3

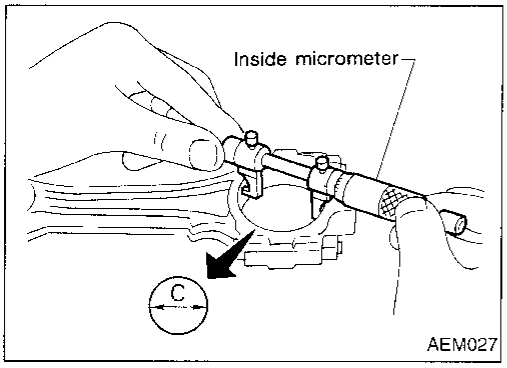

Connecting rod bearing (Big end)

1. Install connecting rod bearing to connecting rod and cap.
2. Install connecting rod cap to connecting rod.

Tighten bolts to the specified torque. Refer to EM-49.

3. Measure inner diameter "C" of each bearing.

Inspection (Cont'd)

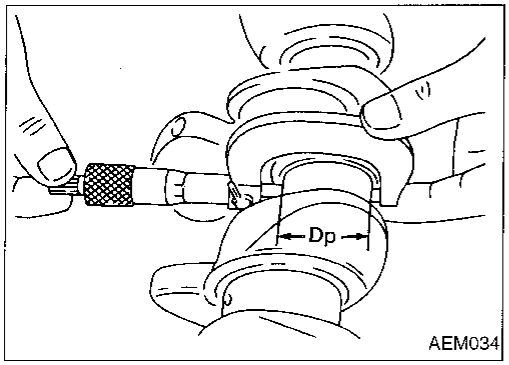

4. Measure outer diameter "Dp" of each crankshaft pin journal.
5. Calculate connecting rod bearing clearance.
   Connecting rod bearing clearance = C – Dp:
   Standard
   0.014 - 0.054 mm (0.0006 - 0.0021 in)
   Limit
   0.090 mm (0.0035 in)
   If it exceeds the limit, replace bearing.
- If clearance cannot be adjusted within the standard of any bearing, grind crankshaft journal and use undersized bearing.
  Refer to EM-45 for fillet roll remarks, grinding crankshaft and available service parts.

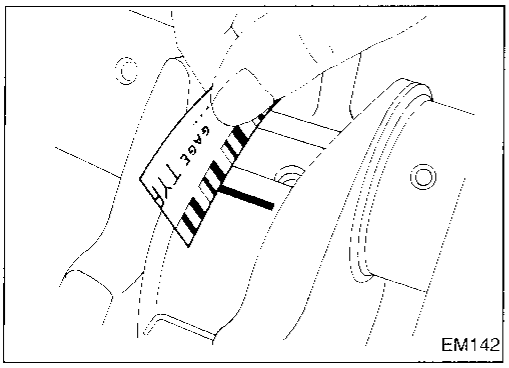

Method B (Using plastigage)

CAUTION:
- **Do not turn crankshaft or connecting rod while plastigage is being inserted.**
- **If incorrect bearing clearance exists, use a thicker or undersized main bearing to ensure specified clearance.**

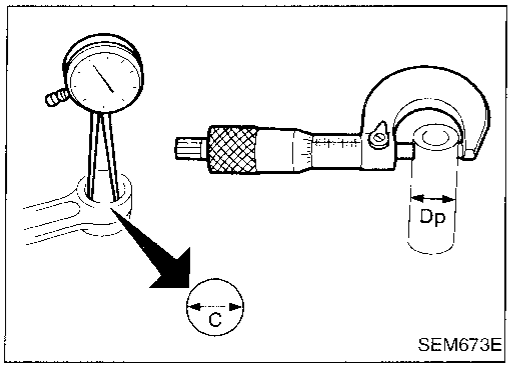

CONNECTING ROD BUSHING CLEARANCE (Small end)

1. Measure inner diameter "C" of bushing.
2. Measure outer diameter "Dp" of piston pin.
3. Calculate connecting rod bushing clearance.
   Connecting rod bushing clearance = C – Dp
   Standard:
   0.005 - 0.017 mm (0.0002 - 0.0007 in)
   Limit:
   0.023 mm (0.0009 in)
   If it exceeds the limit, replace connecting rod assembly or connecting rod bushing and/or piston set with pin.

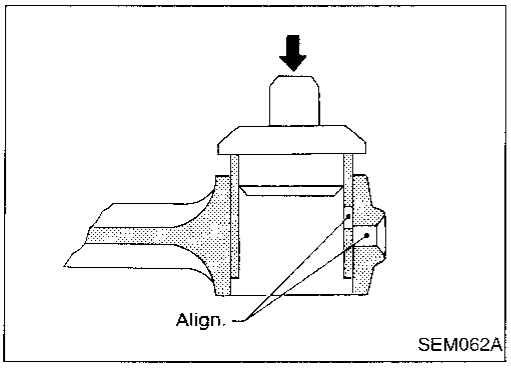

REPLACEMENT OF CONNECTING ROD BUSHING (Small end)

1. Drive in small end bushing until it is flush with end surface of rod.

Be sure to align the oil holes.

2. Ream the bushing so that clearance with piston pin is within specification.
   Clearance between connecting rod bushing and piston pin:
   0.005 - 0.017 mm (0.0002 - 0.0007 in)

Inspection (Cont'd)

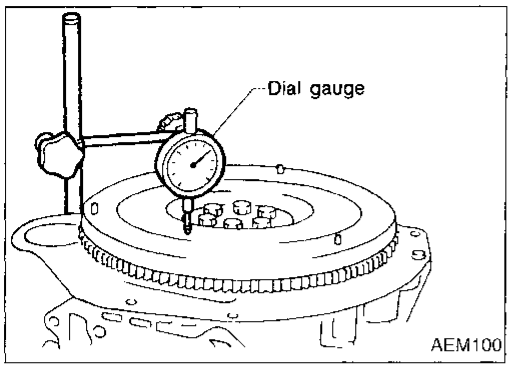

DRIVE PLATE RUNOUT

Runout (Total indicator reading):
Less than 0.15 mm (0.0059 in)

CAUTION:

- **Be careful not to damage the ring gear teeth.**
- **Check the drive plate for deformation or cracks.**
- **Do not allow any magnetic materials to contact the ring gear teeth.**
- **Do not resurface drive plate. Replace as necessary.**

Assembly

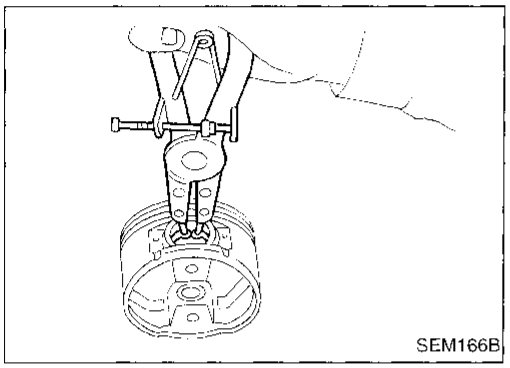

PISTON

1. Install new snap ring on one side of piston pin hole.

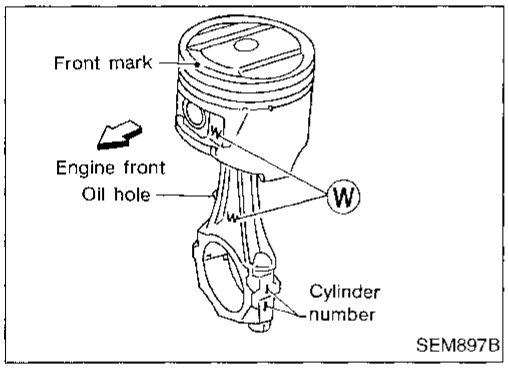

2. Heat piston to 60 to 70°C (140 to 158°F) and assemble piston, piston pin, connecting rod and new snap ring.

- **Align the direction of piston and connecting rod.**
- **Numbers stamped on connecting rod and cap correspond to each cylinder.**
- **After assembly, make sure connecting rod swings smoothly.**

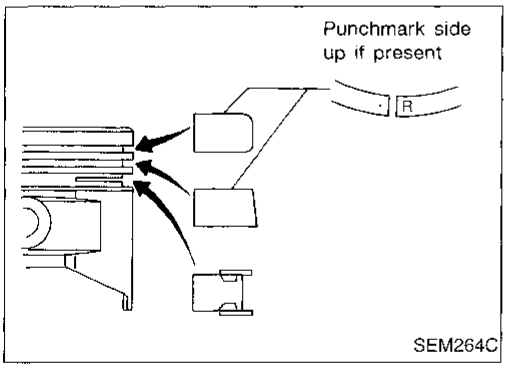

3. Set piston rings as shown.

CAUTION:

- **When piston rings are not replaced, make sure that piston rings are mounted in their original positions.**
- **Install new piston rings either side up if there is no punchmark.**

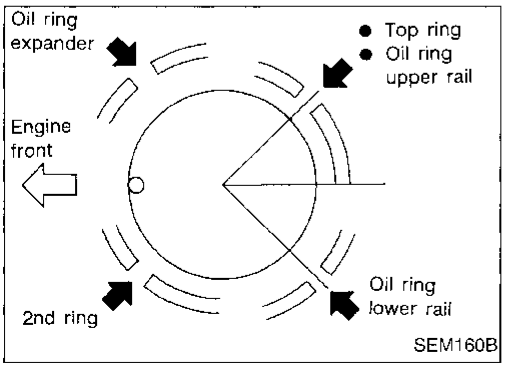

- **Align piston rings so that end gaps are positioned as shown.**

Assembly (Cont'd)

CRANKSHAFT

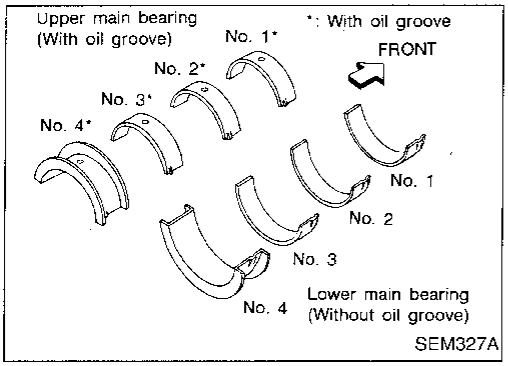

1. Set main bearings in their proper positions on cylinder block and main bearing cap.

- **Confirm that correct main bearings are selected by using Method A or Method B. Refer to EM-45.**
- **Apply new engine oil to bearing surfaces.**

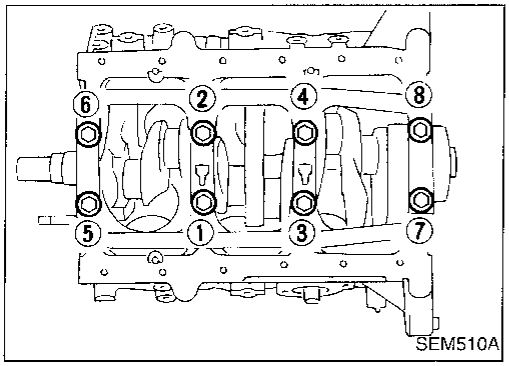

2. Install crankshaft and main bearing caps and tighten bolts to the specified torque.

- **Apply new engine oil to the bolt thread and seat surface.**
- **Prior to tightening bearing cap bolts, shift crankshaft back and forth to properly seat the bearing cap.**
- **Tighten bearing cap bolts gradually in two or three steps. Start with center bearing and move outward as shown in figure.**
- **After securing bearing cap bolts, make sure crankshaft turns smoothly by hand.**

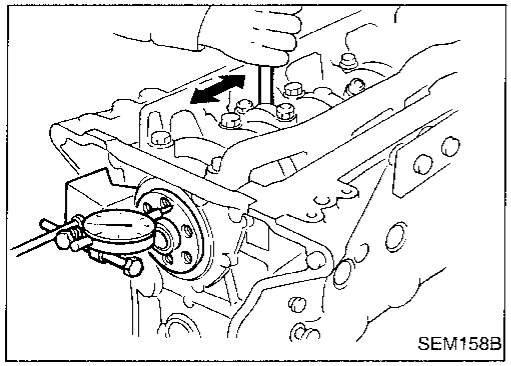

3. Measure crankshaft end play.

Crankshaft end play:
Standard
0.050 - 0.170 mm (0.0020 - 0.0067 in)
Limit
0.30 mm (0.0118 in)

If beyond the limit, replace thrust bearing with a new one.

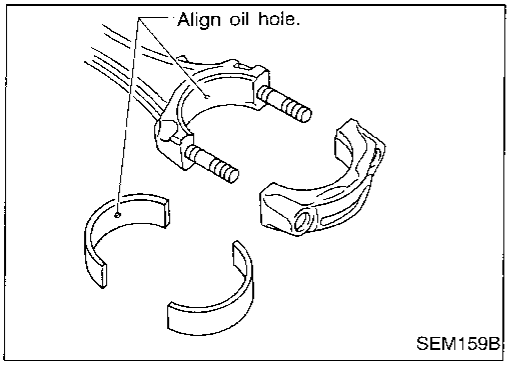

4. Install connecting rod bearings in connecting rods and connecting rod caps.

- **Confirm that correct bearings are used, refer to EM-46.**
- **Install bearings so that oil hole in connecting rod aligns with oil hole of bearing.**
- **Apply new engine oil to bearing surfaces, bolt threads and seating surfaces.**

Assembly (Cont'd)

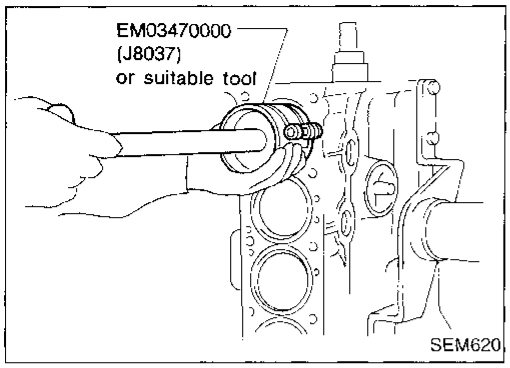

5. Install pistons with connecting rods.
a. Install them into corresponding cylinders with Tool.
- **Make sure connecting rod does not scratch cylinder wall.**
- **Make sure connecting rod bolts do not scratch crankshaft pin journals.**
- **Arrange so that front mark on piston head faces toward front of engine.**
- **Apply new engine oil to piston rings and sliding surface of piston.**

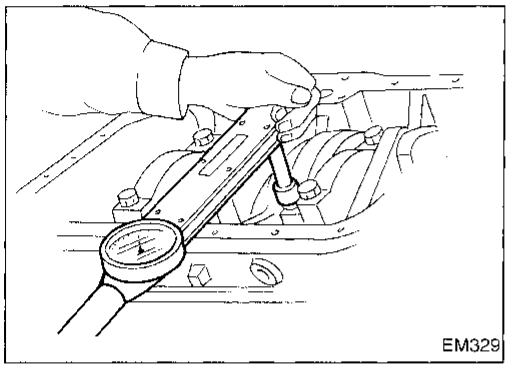

b. Install connecting rod caps.
- **Apply new engine oil to bolt threads and nut seating surfaces.**

Tighten connecting rod cap nuts using the following procedure.

(1) Tighten to 14 to 16 N·m (1.4 to 1.6 kg-m, 10 to 12 ft-lb).
(2) Turn nuts 60 to 65° clockwise with an angle wrench. If an angle wrench is not available, tighten nuts to 38 to 44 N·m (3.9 to 4.5 kg-m, 28 to 33 ft-lb).

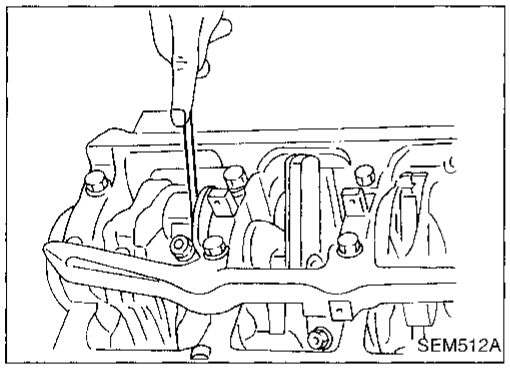

6. Measure connecting rod side clearance.

Connecting rod side clearance:
Standard
0.20 - 0.35 mm (0.0079 - 0.0138 in)
Limit
0.40 mm (0.0157 in)

If beyond the limit, replace connecting rod and/or crankshaft.

General Specifications

Cylinder arrangement		V-6
Displacement	cm^3 (cu in)	2,960 (180.62)
Bore and stroke	mm (in)	87 × 83 (3.43 × 3.27)
Valve arrangement		OHC
Firing order		1-2-3-4-5-6
Number of piston rings		
Compression		2
Oil		1
Number of main bearings		4
Compression ratio		9.0

Cylinder number

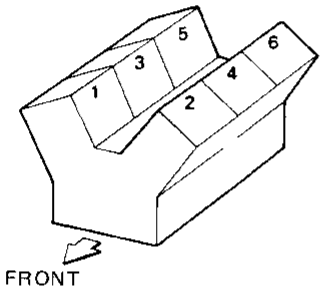

SEM713A

COMPRESSION PRESSURE

Unit: kPa (kg/cm^2, psi)/300 rpm

Compression pressure	
Standard	1,196 (12.2, 173)
Minimum	883 (9.0, 128)
Differential limit between cylinders	98 (1.0, 14)

Inspection and Adjustment

CYLINDER HEAD

Unit: mm (in)

	Standard	Limit
Head surface distortion	Less than 0.03 (0.0012)	0.1 (0.004)

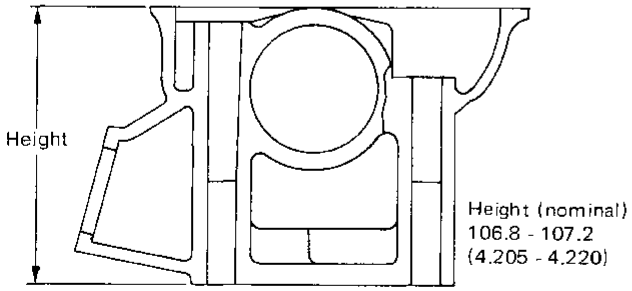

SEM082B

Inspection and Adjustment (Cont'd)

VALVE

Unit: mm (in)

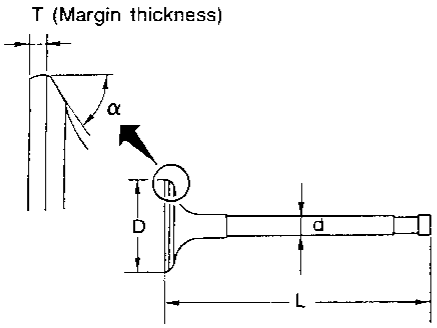

SEM188

Valve head diameter "D"	
Intake	42.0 - 42.2 (1.654 - 1.661)
Exhaust	35.0 - 35.2 (1.378 - 1.386)
Valve length "L"	
Intake	125.3 - 125.9 (4.933 - 4.957)
Exhaust	124.2 - 124.8 (4.890 - 4.913)
Valve stem diameter "d"	
Intake	6.965 - 6.980 (0.2742 - 0.2748)
Exhaust	7.965 - 7.970 (0.3136 - 0.3138)
Valve seat angle "α"	
Intake	45°15' - 45°45'
Exhaust	
Valve margin "T"	
Intake	1.15 - 1.45 (0.0453 - 0.0571)
Exhaust	1.35 - 1.65 (0.0531 - 0.0650)
Valve margin "T" limit	More than 0.5 (0.020)
Valve stem end surface grinding limit	Less than 0.2 (0.008)
Valve clearance	
Intake	0 (0)
Exhaust	0 (0)

Valve spring

Free height	mm (in)	Outer	51.2 (2.016)
		Inner	44.1 (1.736)
Pressure N (kg, lb) at height mm (in)		Outer	523.7 (53.4, 117.7) at 30.0 (1.181)
		Inner	255.0 (26.0, 57.3) at 25.0 (0.984)
Out-of-square	mm (in)	Outer	2.2 (0.087)
		Inner	1.9 (0.075)

Hydraulic valve lifter

Unit: mm (in)

Lifter outside diameter	15.947 - 15.957 (0.6278 - 0.6282)
Lifter guide inside diameter	16.000 - 16.013 (0.6299 - 0.6304)
Clearance between lifter and lifter guide	0.043 - 0.066 (0.0017 - 0.0026)

Valve guide

Unit: mm (in)

		Standard	Service
Valve guide Outer diameter	Intake	11.023 - 11.034 (0.4340 - 0.4344)	11.223 - 11.234 (0.4418 - 0.4423)
	Exhaust	12.023 - 12.034 (0.4733 - 0.4738)	12.223 - 12.234 (0.4812 - 0.4817)
Valve guide Inner diameter (Finished size)	Intake	7.000 - 7.018 (0.2756 - 0.2763)	
	Exhaust	8.000 - 8.011 (0.3150 - 0.3154)	
Cylinder head valve guide hole diameter	Intake	10.975 - 10.996 (0.4321 - 0.4329)	11.175 - 11.196 (0.4400 - 0.4408)
	Exhaust	11.975 - 11.996 (0.4715 - 0.4723)	12.175 - 12.196 (0.4793 - 0.4802)
Interference fit of valve guide	Intake	0.027 - 0.059 (0.0011 - 0.0023)	
	Exhaust		
		Standard	Max. tolerance
Stem to guide clearance	Intake	0.020 - 0.053 (0.0008 - 0.0021)	0.10 (0.0039)
	Exhaust	0.040 - 0.073 (0.0016 - 0.0029)	
Valve deflection limit		—	0.20 (0.0079)

Rocker shaft and rocker arm

Unit: mm (in)

Rocker shaft	
Outer diameter	17.979 - 18.000 (0.7078 - 0.7087)
Rocker arm	
Inner diameter	18.007 - 18.028 (0.7089 - 0.7098)
Clearance between rocker arm and rocker shaft	0.007 - 0.049 (0.0003 - 0.0019)

Inspection and Adjustment (Cont'd)

Intake valve seat

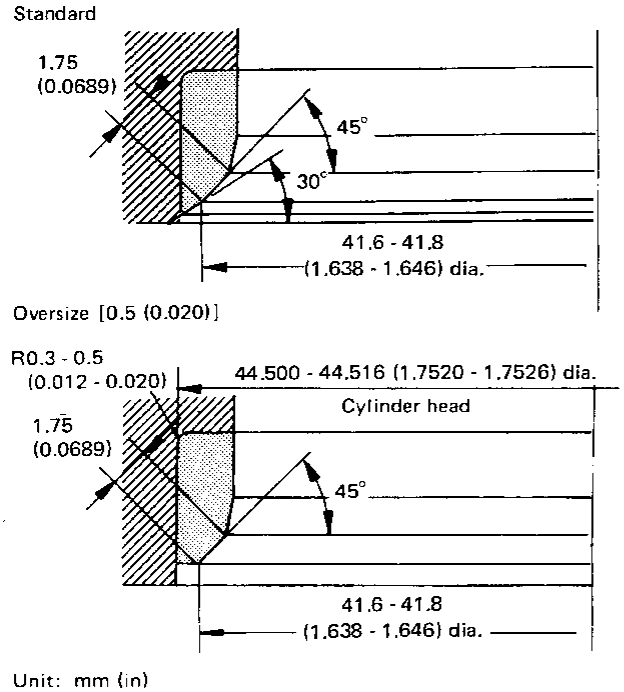

Exhaust valve seat

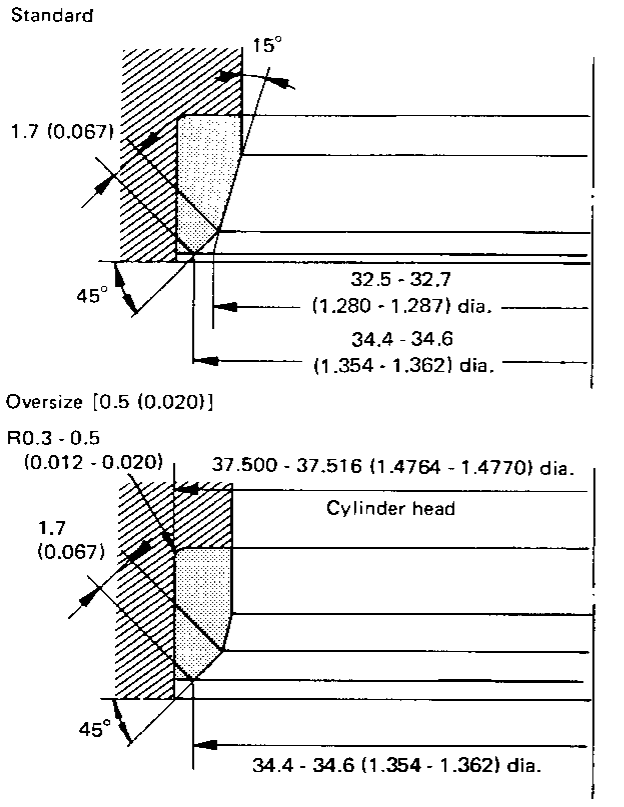

CAMSHAFT AND CAMSHAFT BEARING

Unit: mm (in)

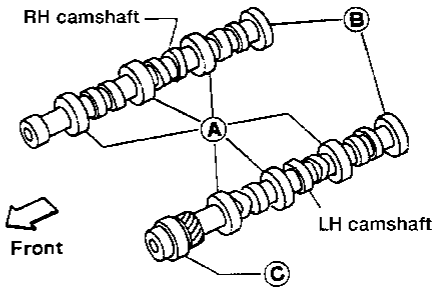

AEM045

		Standard	Max. tolerance
Camshaft journal to bearing clearance		0.045 - 0.090 (0.0018 - 0.0035)	0.15 (0.0059)
Inner diameter of camshaft bearing	Ⓐ:	47.000 - 47.025 (1.8504 - 1.8514)	—
	Ⓑ:	42.500 - 42.525 (1.6732 - 1.6742)	—
	Ⓒ:	48.000 - 48.025 (1.8898 - 1.8907)	—
Outer diameter of camshaft journal	Ⓐ:	46.920 - 46.940 (1.8472 - 1.8480)	—
	Ⓑ:	42.420 - 42.440 (1.6701 - 1.6709)	—
	Ⓒ:	47.920 - 47.940 (1.8866 - 1.8874)	—
Camshaft runout [TIR*]		Less than 0.04 (0.0016)	0.1 (0.004)
Camshaft end play		0.03 - 0.06 (0.0012 - 0.0024)	—

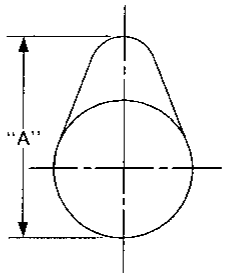

EM671

Cam height "A"	
Intake	38.943 - 39.133 (1.5332 - 1.5407)
Exhaust	
Wear limit of cam height	0.15 (0.0059)

*Total indicator reading

Inspection and Adjustment (Cont'd)

Valve timing

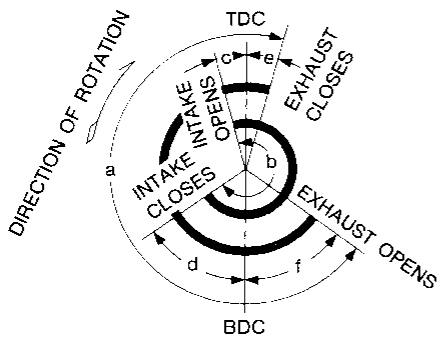

AEM050

Unit: degree

a	b	c	d	e	f
240	244	7	57	7	53

CYLINDER BLOCK

Unit: mm (in)

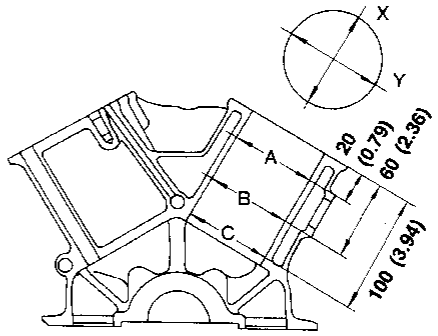

SEM321A

Surface flatness	
Standard	Less than 0.03 (0.0012)
Limit	0.10 (0.0039)
Cylinder bore	
Inner diameter	
Standard	
Grade No. 1	87.000 - 87.010 (3.4252 - 3.4256)
Grade No. 2	87.010 - 87.020 (3.4256 - 3.4260)
Grade No. 3	87.020 - 87.030 (3.4260 - 3.4264)
Wear limit	0.20 (0.0079)
Out-of-round (X – Y) standard	Less than 0.015 (0.0006)
Taper (A – B or A – C) standard	Less than 0.015 (0.0006)
Main journal inner diameter	
Grade No. 0	66.645 - 66.654 (2.6238 - 2.6242)
Grade No. 1	66.654 - 66.663 (2.6242 - 2.6245)
Grade No. 2	66.663 - 66.672 (2.6245 - 2.6249)
Difference in inner diameter between cylinders	
Standard	Less than 0.05 (0.0020)

PISTON, PISTON RING AND PISTON PIN

Available piston

Unit: mm (in)

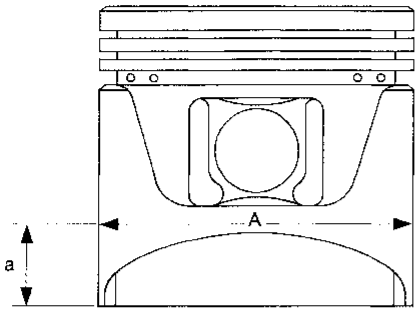

SEM891B

Piston skirt diameter "A"	
Standard	
Grade No. 1	86.965 - 86.975 (3.4238 - 3.4242)
Grade No. 2	86.975 - 86.985 (3.4242 - 3.4246)
Grade No. 3	86.985 - 86.995 (3.4246 - 3.4250)
0.25 (0.0098) oversize (Service)	87.215 - 87.265 (3.4337 - 3.4356)
0.50 (0.0197) oversize (Service)	87.465 - 87.515 (3.4435 - 3.4455)
"a" dimension	18 (0.71)
Piston pin hole diameter	20.969 - 20.975 (0.8255 - 0.8258)
Piston clearance to cylinder block	0.025 - 0.045 (0.0010 - 0.0018)

Piston ring

Unit: mm (in)

	Standard	Limit
Side clearance		
Top	0.040 - 0.073 (0.0016 - 0.0029)	0.1 (0.004)
2nd	0.030 - 0.063 (0.0012 - 0.0025)	
Oil	0.015 - 0.19 (0.0006 - 0.0075)	—
Ring gap		
Top	0.21 - 0.44 (0.0083 - 0.0173)	1.0 (0.039)
2nd	0.18 - 0.44 (0.0071 - 0.0173)	
Oil (rail ring)	0.20 - 0.76 (0.0079 - 0.0299)	

Piston pin

Unit: mm (in)

Piston pin outer diameter	20.971 - 20.983 (0.8256 - 0.8261)
Interference fit of piston pin to piston	–0.004 to 0 (–0.0002 to 0)
Piston pin to connecting rod bushing clearance	0.005 - 0.017 (0.0002 - 0.0007)

Values measured at ambient temperature of 20°C (68°F)

CONNECTING ROD

Unit: mm (in)

Center distance	154.1 - 154.2 (6.067 - 6.071)
Bend, torsion [per 100 (3.94)]	
Limit	0.10 (0.0039)
Piston pin bushing inner diameter*	20.982 - 20.994 (0.8261 - 0.8265)
Connecting rod big end inner diameter	53.000 - 53.013 (2.0866 - 2.0871)
Side clearance	
Standard	0.20 - 0.35 (0.0079 - 0.0138)
Limit	0.40 (0.0157)

*After installing in connecting rod

Inspection and Adjustment (Cont'd)

CRANKSHAFT

Unit: mm (in)

Main journal dia. "Dm"	
Grade No. 0	62.967 - 62.975 (2.4790 - 2.4793)
Grade No. 1	62.959 - 62.967 (2.4787 - 2.4790)
Grade No. 2	62.951 - 62.959 (2.4784 - 2.4787)
Pin journal dia. "Dp"	49.955 - 49.974 (1.9667 - 1.9675)
Center distance "r"	41.5 (1.634)
Out-of-round (X – Y)	
Standard	Less than 0.005 (0.0002)
Taper (A – B)	
Standard	Less than 0.005 (0.0002)
Runout [TIR]	
Standard	Less than 0.025 (0.0010)
Limit	0.10 (0.0039)
Free end play	
Standard	0.050 - 0.170 (0.0020 - 0.0067)
Limit	0.30 (0.0118)

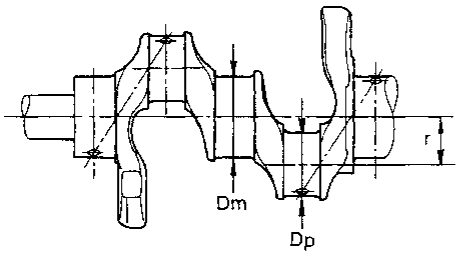

SEM645

Out-of-round (X) – (Y)
Taper (A) – (B)

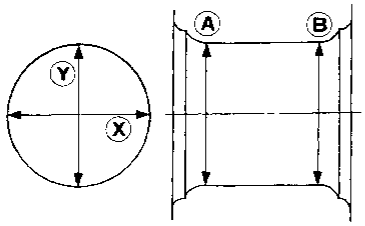

EM715

AVAILABLE MAIN BEARING

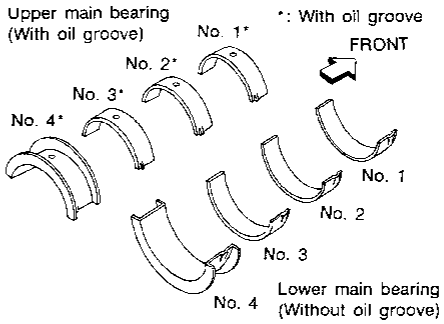

SEM327A

No. 1 main bearing

Grade number	Thickness "T" mm (in)	Width "W" mm (in)	Identification color
0	1.817 - 1.821 (0.0715 - 0.0717)		Black
1	1.821 - 1.825 (0.0717 - 0.0719)		Brown
2	1.825 - 1.829 (0.0719 - 0.0720)	22.4 - 22.6 (0.882 - 0.890)	Green
3	1.829 - 1.833 (0.0720 - 0.0722)		Yellow
4	1.833 - 1.837 (0.0722 - 0.0723)		Blue

No. 2 and 3 main bearing

Grade number	Thickness "T" mm (in)	Width "W" mm (in)	Identification color
0	1.817 - 1.821 (0.0715 - 0.0717)		Black
1	1.821 - 1.825 (0.0717 - 0.0719)		Brown
2	1.825 - 1.829 (0.0719 - 0.0720)	18.9 - 19.1 (0.744 - 0.752)	Green
3	1.829 - 1.833 (0.0720 - 0.0722)		Yellow
4	1.833 - 1.837 (0.0722 - 0.0723)		Blue

Inspection and Adjustment (Cont'd)

No. 4 main bearing

Grade number	Thickness "T" mm (in)	Identification color
0	1.817 - 1.821 (0.0715 - 0.0717)	Black
1	1.821 - 1.825 (0.0717 - 0.0719)	Brown
2	1.825 - 1.829 (0.0719 - 0.0720)	Green
3	1.829 - 1.833 (0.0720 - 0.0722)	Yellow
4	1.833 - 1.837 (0.0722 - 0.0723)	Blue

Main bearing 0.25 mm (0.0098 in) undersize

Unit: mm (in)

Thickness "T"	1.948 - 1.956 (0.0767 - 0.0770)

AVAILABLE CONNECTING ROD BEARING

Connecting rod bearing undersize

Unit: mm (in)

	Thickness	Crank pin journal diameter "Dp"
Standard	1.502 - 1.506 (0.0591 - 0.0593)	49.955 - 49.974 (1.9667 - 1.9675)
Undersize		
0.08 (0.0031)	1.542 - 1.546 (0.0607 - 0.0609)	49.875 - 49.894 (1.9636 - 1.9643)
0.12 (0.0047)	1.562 - 1.566 (0.0615 - 0.0617)	49.835 - 49.854 (1.9620 - 1.9628)
0.25 (0.0098)	1.627 - 1.631 (0.0641 - 0.0642)	49.705 - 49.724 (1.9569 - 1.9576)

MISCELLANEOUS COMPONENTS

Unit: mm (in)

Drive plate	
Runout [TIR]	Less than 0.15 (0.0059)

Bearing clearance

Unit: mm (in)

Main bearing clearance	
Standard	0.028 - 0.055 (0.0011 - 0.0022)
Limit	0.090 (0.0035)
Connecting rod bearing clearance	
Standard	0.014 - 0.054 (0.0006 - 0.0021)
Limit	0.090 (0.0035)