SECTION WW
WIPER & WASHER

CONTENTS

BASIC INSPECTION

DIAGNOSIS AND REPAIR WORKFLOW

Work Flow

INFOID:0000000003938637

DETAILED FLOW

1. LISTEN TO CUSTOMER COMPLAINT

Listen to customer complaint. Get detailed information about the conditions and environment when the symptom occurs.

>> GO TO 2

2. VERIFY THE SYMPTOM WITH OPERATIONAL CHECK

Verify the symptom with operational check. Refer to WW-13, "Diagnosis Description".

>> GO TO 3

3. GO TO APPROPRIATE TROUBLE DIAGNOSIS

Go to appropriate trouble diagnosis. Refer to WW-71, "Symptom Table".

>> GO TO 4

4. REPAIR OR REPLACE

Repair or replace the specific parts.

>> GO TO 5

5. FINAL CHECK

Final check.

Is inspection result normal?

YES >> Inspection End.
NO >> Refer to GI-49, "Intermittent Incident".

FUNCTION DIAGNOSIS

FRONT WIPER AND WASHER SYSTEM

System Diagram

INFOID:0000000003938638

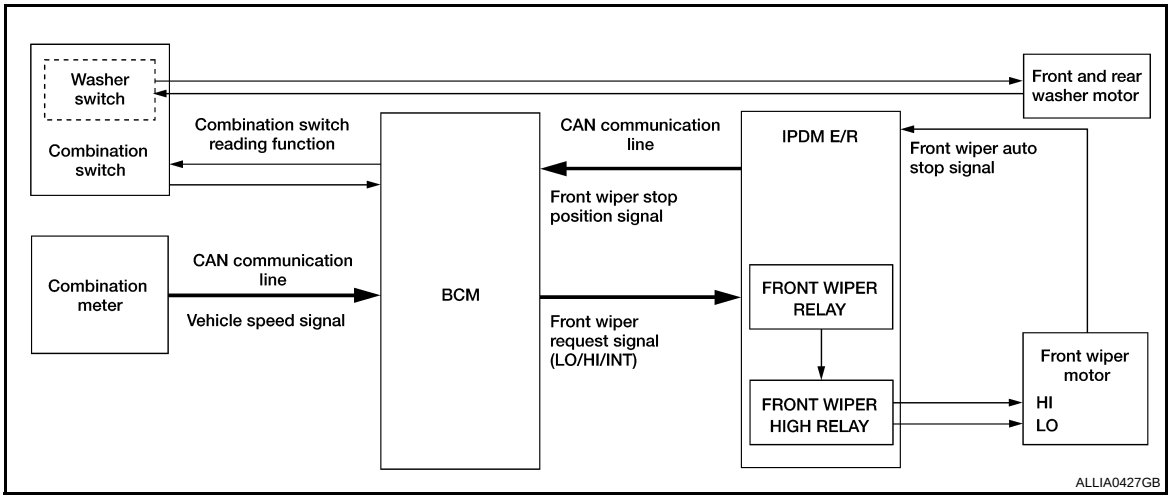

System Description

INFOID:0000000003938639

OUTLINE

The front wiper is controlled by each function of BCM and IPDM E/R.

Control by BCM
- Combination switch reading function
- Front wiper control function

Control by IPDM E/R
- Front wiper control function
- Relay control function

FRONT WIPER BASIC OPERATION

- BCM detects the combination switch condition by the combination switch reading function.
- BCM transmits the front wiper request signal to IPDM E/R with CAN communication depending on each operating condition of the front wiper.
- IPDM E/R turns ON/OFF the integrated front wiper relay and the front wiper high relay according to the front wiper request signal. IPDM E/R provides the power supply to operate the front wiper HI/LO operation.

FRONT WIPER LO OPERATION

- BCM transmits the front wiper request signal (LO) to IPDM E/R with CAN communication according to the front wiper LO operating condition.

Front wiper LO operating condition
- Ignition switch ON
- Front wiper switch LO or front wiper switch MIST (while pressing)
- IPDM E/R turns ON the integrated front wiper relay according to the front wiper request signal (LO).

FRONT WIPER HI OPERATION

- BCM transmits the front wiper request signal (HI) to IPDM E/R with CAN communication according to the front wiper HI operating condition.

Front wiper HI operating condition
- Ignition switch ON
- Front wiper switch HI
- IPDM E/R turns ON the integrated front wiper relay and the front wiper high relay according to the front wiper request signal (HI).

FRONT WIPER INT OPERATION (LINKED WITH VEHICLE SPEED)

- BCM transmits the front wiper request signal (INT) to IPDM E/R with CAN communication according to the front wiper INT operation condition and the intermittent operation delay interval judged value.

Front wiper INT operating condition
- Ignition switch ON
- Front wiper switch INT

Intermittent operation delay interval judgment
- BCM calculates the intermittent operation delay interval from the vehicle speed signal received from the wiper dial position and the combination meter with CAN communication.

Wiper intermittent dial position	Intermittent operation interval	Intermittent operation delay Interval (s)			
		Vehicle speed			
		Vehicle stopped or less than 5 km/h (3.1 MPH)	5 km/h (3.1 MPH) or more or less than 35 km/h (21.7 MPH)	35 km/h (21.7 MPH) or more or less than 65 km/h (40.4 MPH)	65 km/h (40.4 MPH) or more
1	Short ↑	0.8	0.6	0.4	0.24
2		4	3	2	1.2
3		10	7.5	5	3
4		16	12	8	4.8
5		24	18	12	7.2
6	↓	32	24	16	9.6
7	Long	42	31.5	21	12.6

- IPDM E/R turns the integrated front wiper relay ON so that the front wiper is operated only once according to the front wiper request signal (INT).
- BCM detects stop position/except stop position of the front wiper motor according to the front wiper stop position signal received from IPDM E/R with CAN communication.
- BCM transmits the front wiper request signal (INT) again after the intermittent operation delay interval after the front wiper motor is stopped.

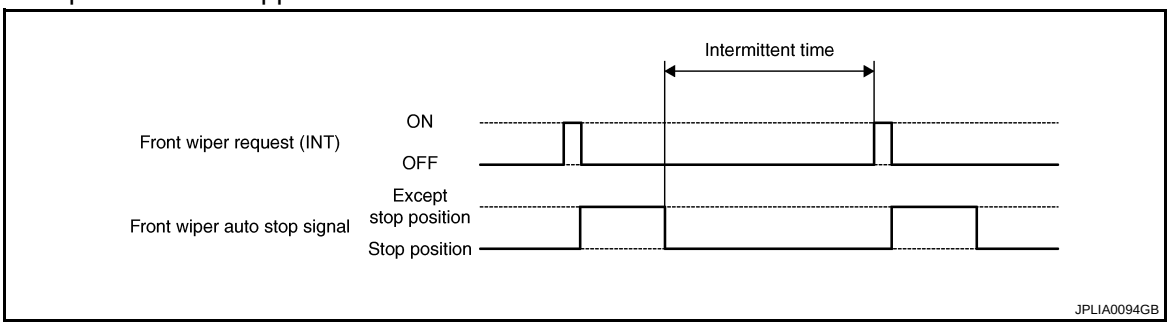

FRONT WIPER AUTO STOP OPERATION

- BCM stops transmitting the front wiper request signal when the front wiper switch is turned OFF.
- IPDM E/R detects the front wiper auto stop signal from the front wiper motor and detects the front wiper motor position (stop position/except stop position).

- When the front wiper request signal is stopped, IPDM E/R turns ON the front wiper relay until the front wiper motor returns to the stop position.

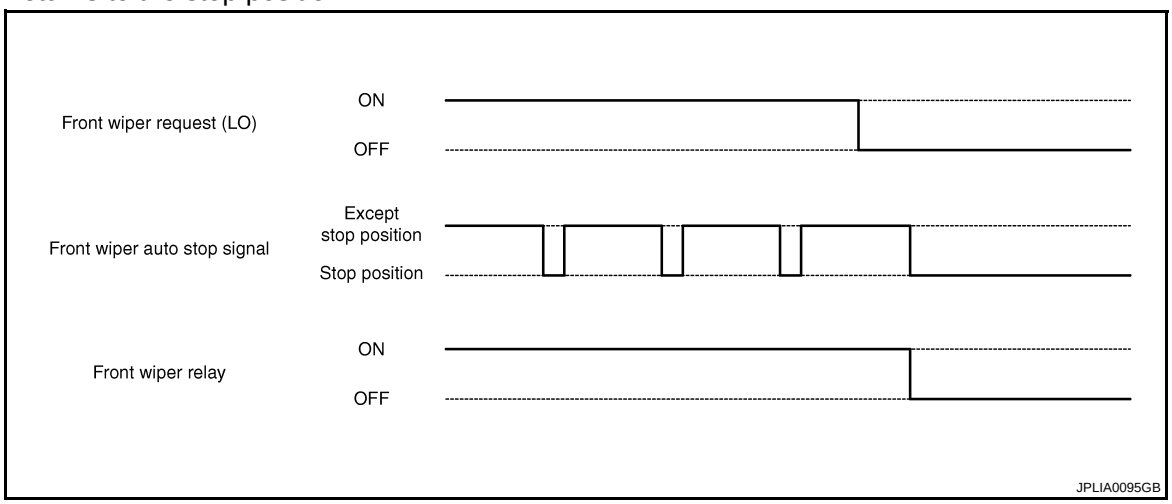

NOTE:
- BCM stops the transmitting of the front wiper request signal when the ignition switch is OFF.
- IPDM E/R turns the front wiper relay OFF when the ignition switch is OFF.

FRONT WIPER OPERATION LINKED WITH WASHER

- BCM transmits the front wiper request signal (LO) to IPDM E/R with CAN communication according to the washer linked operating condition of the front wiper.
- BCM transmits the front wiper request signal (LO) so that the front wiper operates approximately 3 times when the front washer switch OFF is detected.

Washer linked operating condition of front wiper
- Ignition switch ON
- Front washer switch ON (0.4 second or more)

- IPDM E/R turns ON the integrated front wiper relay according to the front wiper request signal (LO).
- The front and rear washer motor is grounded through the combination switch with the front washer switch ON.

FRONT WIPER DROP WIPE OPERATION

- BCM controls the front wiper to operate once according to the conditions of front wiper drop wipe operation.

Front wiper drop wipe operating condition
- Ignition switch ON
- Front wiper switch OFF
- Front washer switch OFF

- BCM transmits the front wiper request signal (LO) to IPDM E/R with CAN communication so that the front wiper operate once three seconds after front wiper operation linked with washer.
- IPDM E/R turns ON the integrated front wiper relay according to the front wiper request signal (LO).

FRONT WIPER FAIL–SAFE OPERATION

- IPDM E/R performs the fail-safe function when the front wiper auto stop circuit is malfunctioning. Refer to WW-68, "Fail Safe".

Component Parts Location

INFOID:0000000003938640

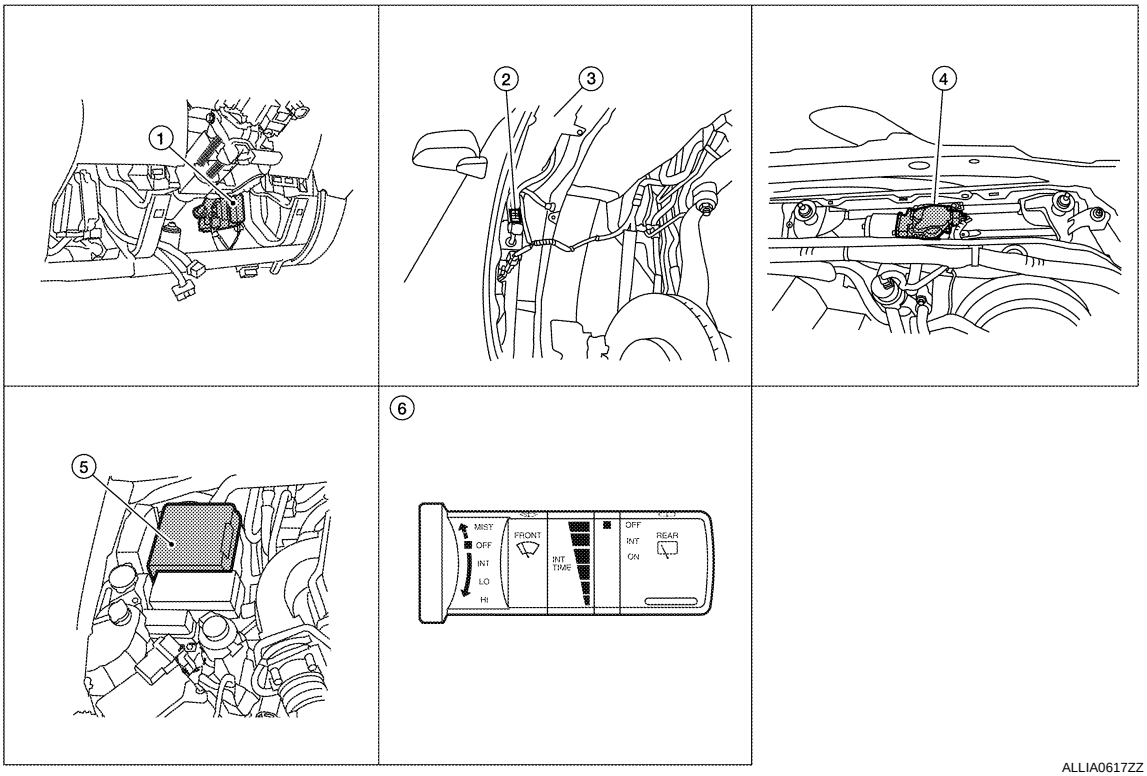

ALLIA0617ZZ

1. BCM M18, M20 (view with instrument lower panel LH removed)
2. Front and rear washer motor E105
3. Washer fluid reservoir
4. Front wiper motor E23 (view with cowl top removed)
5. IPDM E/R E121, E122, E124
6. Combination switch M28

Component Description

INFOID:0000000003938641

Part	Description
BCM	• Judges each switch status by the combination switch reading function. • Requests (with CAN communication) the front wiper relay and the front wiper high relay ON to IPDM E/R.
IPDM E/R	• Controls the integrated relay according to the request (with CAN communication) from BCM. • Performs the auto stop control of the front wiper.
Combination switch (Wiper and washer switch)	Refer to WW-4, "System Diagram".
Combination meter	Transmits the vehicle speed signal to BCM with CAN communication.

REAR WIPER AND WASHER SYSTEM

System Diagram

INFOID:0000000003938642

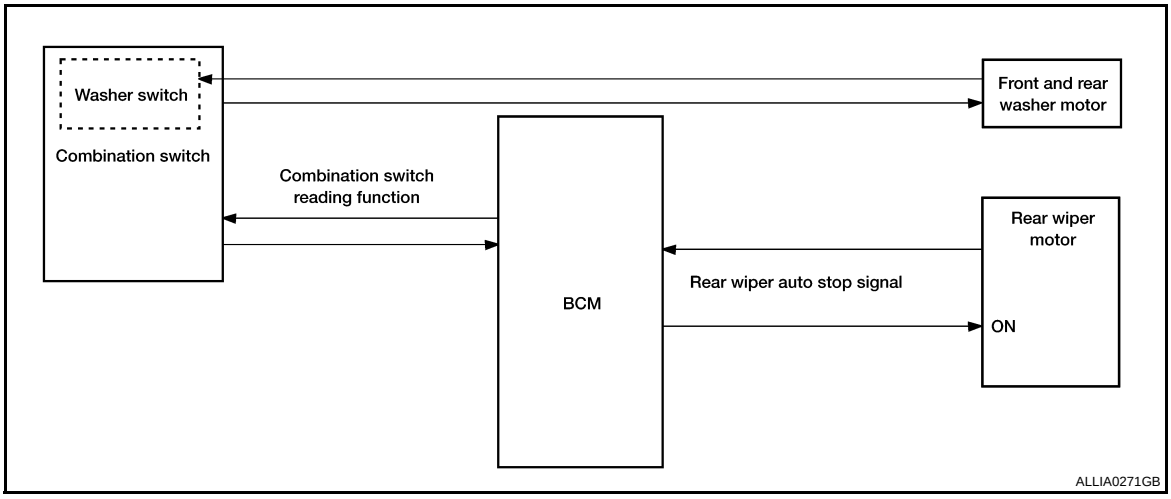

System Description

INFOID:0000000003938643

OUTLINE

The rear wiper is controlled by each function of BCM.

Control by BCM
- Combination switch reading function
- Rear wiper control function

REAR WIPER BASIC OPERATION

- BCM detects the combination switch condition by the combination switch reading function.
- BCM controls the rear wiper to start or stop.

REAR WIPER ON OPERATION

- BCM supplies power to the rear wiper motor according to the rear wiper ON operating condition.

Rear wiper ON operating condition
- Ignition switch ON
- Rear wiper switch ON

REAR WIPER INT OPERATION

- BCM supplies power to the rear wiper motor according to the INT operating condition.

Rear wiper INT operating condition
- Ignition switch ON
- Rear wiper switch INT
- BCM controls the rear wiper to operate once.
- BCM detects the rear wiper motor stopping position.
- BCM supplies power to the rear wiper motor after an intermittent from the stop of the rear wiper motor.

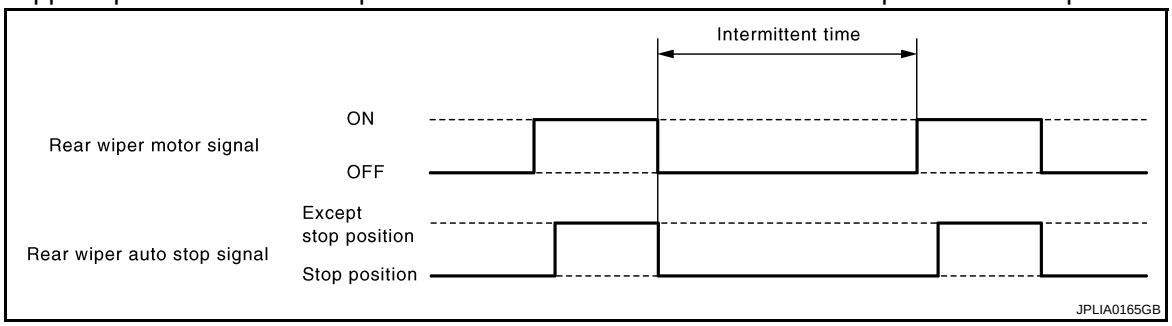

REAR WIPER AUTO STOP OPERATION

- BCM stops supplying power to the rear wiper motor when the rear wiper switch is turned OFF.

- BCM reads an auto stop signal from the rear wiper motor to detect a rear wiper motor position.
- When the rear wiper motor is at other than the stopping position, BCM continues to supply power to the rear wiper motor until it returns to the stopping position.

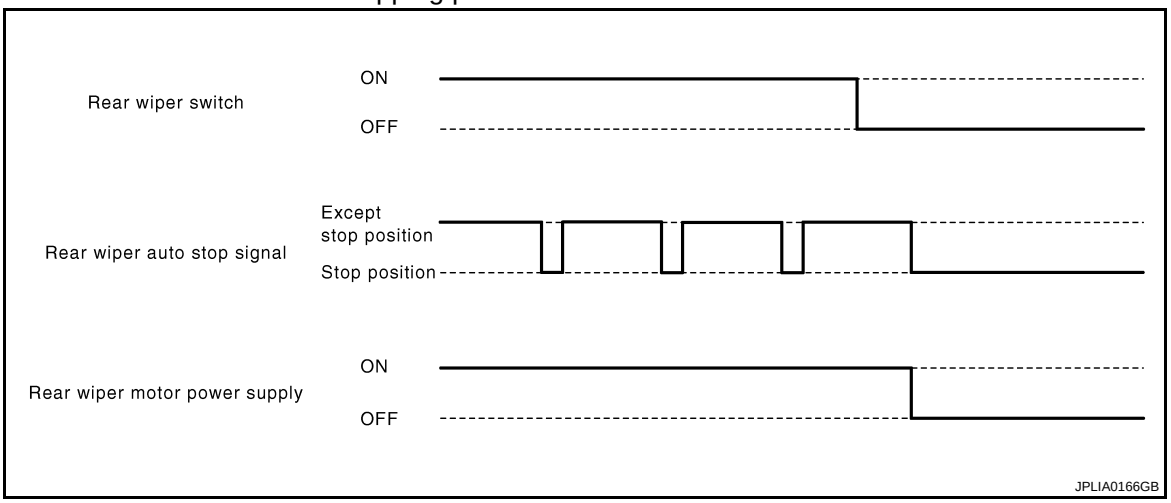

NOTE:
BCM stops supplying power to the rear wiper motor when the ignition switch is turned OFF.

REAR WIPER OPERATION LINKED WITH WASHER

- BCM supplies power to the rear wiper motor according to the washer linked operating condition of rear wiper. When the rear washer switch is turned OFF, BCM controls rear wiper to operate approximately three times.

Washer linked operating condition of rear wiper
- Ignition switch ON
- Rear washer switch ON (0.4 second or more)
- Front and rear washer motor becomes grounded through the combination switch when the rear washer switch is turned ON.

REAR WIPER DROP WIPE OPERATION

- BCM controls the rear wiper to operate once according to the rear wiper drop wipe operating condition.

Rear wiper drop wipe operating condition
- Ignition switch ON
- Rear wiper switch OFF
- Rear washer switch OFF
- BCM controls the rear wiper so that it operates once time approximately three seconds later after the washer interlocking operation of the rear wiper.

REAR WIPER FAIL–SAFE OPERATION

BCM performs the fail-safe function when the rear wiper auto stop circuit is malfunctioning. Refer to BCS-53, "Fail Safe".

Component Parts Location

INFOID:0000000003938644

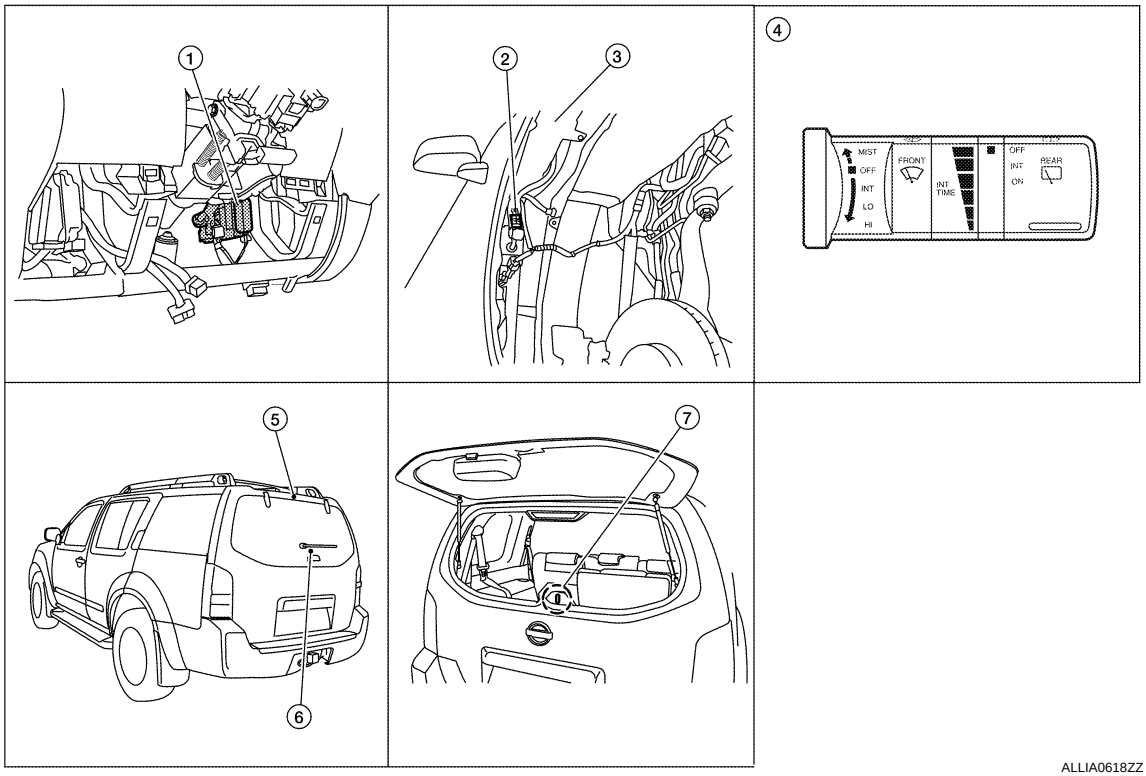

ALLIA0618ZZ

1. BCM M18, M19, M20 (view with instrument lower panel LH removed)
2. Front and rear washer motor connector E105
3. Washer fluid reservoir
4. Combination switch M28
5. Rear washer nozzle
6. Rear wiper motor D602
7. Glass hatch ajar switch D503

Component Description

INFOID:0000000003938645

Part	Description
BCM	• Judges each switch status by the combination switch reading function. • Supplies power to the rear wiper motor. • Performs the auto stop control of the rear wiper.
Combination switch (Wiper and washer switch)	Refer to WW-4, "System Diagram".

DIAGNOSIS SYSTEM (BCM)

COMMON ITEM

COMMON ITEM : CONSULT-III Function (BCM - COMMON ITEM)

INFOID:0000000004409570

APPLICATION ITEM

CONSULT-III performs the following functions via CAN communication with BCM.

Diagnosis mode	Function Description
WORK SUPPORT	Changes the setting for each system function.
SELF-DIAG RESULTS	Displays the diagnosis results judged by BCM. Refer to BCS-54, "DTC Index".
CAN DIAG SUPPORT MNTR	Monitors the reception status of CAN communication viewed from BCM.
DATA MONITOR	The BCM input/output signals are displayed.
ACTIVE TEST	The signals used to activate each device are forcibly supplied from BCM.
ECU IDENTIFICATION	The BCM part number is displayed.
CONFIGURATION	• Enables to read and save the vehicle specification. • Enables to write the vehicle specification when replacing BCM.

SYSTEM APPLICATION

BCM can perform the following functions for each system.

NOTE:

It can perform the diagnosis modes except the following for all sub system selection items.

System	Sub system selection item	Diagnosis mode		
		WORK SUPPORT	DATA MONITOR	ACTIVE TEST
BCM	BCM	×		
Door lock	DOOR LOCK	×	×	×
Rear window defogger	REAR DEFOGGER		×	×
Warning chime	BUZZER		×	×
Interior room lamp timer	INT LAMP	×	×	×
Remote keyless entry system[1]	MULTI REMOTE ENT	×	×	×
Exterior lamp	HEAD LAMP	×	×	×
Wiper and washer	WIPER	×	×	×
Turn signal and hazard warning lamps	FLASHER		×	×
Air conditioner	AIR CONDITONER		×	
Intelligent Key system[2]	INTELLIGENT KEY		×	
Combination switch	COMB SW		×	
Immobilizer	IMMU		×	×
Interior room lamp battery saver	BATTERY SAVER	×	×	×
Back door open	TRUNK		×	×
Theft alarm	THEFT ALM	×	×	×
RAP (retained accessory power)	RETAINED PWR	×	×	×
Signal buffer system	SIGNAL BUFFER		×	×
TPMS (tire pressure monitoring system)	AIR PRESSURE MONITOR	×	×	×
Vehicle security system	PANIC ALARM			×

1: With remote keyless entry system

2: With Intelligent Key

WIPER

WIPER : CONSULT-III Function (BCM - WIPER)

INFOID:0000000004409571

WORK SUPPORT

Work Item	Setting Item	Description
WIPER SPEED SETTING	ON*	With vehicle speed (Front wiper intermittent time linked with the vehicle speed and wiper intermittent dial position)
	OFF	Without vehicle speed (Front wiper intermittent time linked with the wiper intermittent dial position)

*: Factory setting

DATA MONITOR

Monitor Item [Unit]	Description
IGN ON SW [ON/OFF]	Ignition switch ON status judged from ignition power supply
IGN SW CAN [ON/OFF]	Ignition switch ON status received from IPDM E/R with CAN communication
FR WIPER HI [ON/OFF]	Each switch status that BCM judges from the combination switch reading function
FR WIPER LOW [ON/OFF]	
FR WIPER INT [ON/OFF]	
FR WASHER SW [ON/OFF]	
INT VOLUME [1 - 7]	Each switch status that BCM judges from the combination switch reading function
FR WIPER STOP [ON/OFF]	Front wiper motor (stop position) status received from IPDM E/R with CAN communication
VEHICLE SPEED [km/h]	The value of the vehicle speed signal received from combination meter with CAN communication
RR WIPER ON [ON/OFF]	Each switch status that BCM judges from the combination switch reading function
RR WIPER INT [ON/OFF]	
RR WASHER SW [ON/OFF]	
RR WIPER STOP [ON/OFF]	Rear wiper motor (stop position) status input from the rear wiper motor
H/L WASH SW*	—

*: The item is indicated, not monitored.

ACTIVE TEST

Test Item	Operation	Description
FR WIPER	HI	Transmits the front wiper request signal (HI) to IPDM E/R with CAN communication to operate the front wiper HI operation.
	LO	Transmits the front wiper request signal (LO) to IPDM E/R with CAN communication to operate the front wiper LO operation.
	INT	Transmits the front wiper request signal (INT) to IPDM E/R with CAN communication to operate the front wiper INT operation.
	OFF	Stops transmitting the front wiper request signal to stop the front wiper operation.
RR WIPER	ON	Outputs the voltage to operate the rear wiper motor.
	OFF	Stops the voltage to stop.

DIAGNOSIS SYSTEM (IPDM E/R)

Diagnosis Description

INFOID:0000000004409572

AUTO ACTIVE TEST

Description

In auto active test mode, the IPDM E/R sends a drive signal to the following systems to check their operation.

- Oil pressure low warning indicator
- Oil pressure gauge
- Rear window defogger
- Front wipers
- Tail, license and parking lamps
- Front fog lamps
- Headlamps (Hi, Lo)
- A/C compressor (magnetic clutch)
- Cooling fan

Operation Procedure

1. Close the hood and front door RH, and lift the wiper arms from the windshield (to prevent windshield damage due to wiper operation).
   NOTE:
   When auto active test is performed with hood opened, sprinkle water on windshield before hand.
2. Turn ignition switch OFF.
3. Turn the ignition switch ON and, within 20 seconds, press the front door switch LH 10 times. Then turn the ignition switch OFF.
4. Turn the ignition switch ON within 10 seconds. After that the horn sounds once and the auto active test starts.
5. After a series of the following operations is repeated 3 times, auto active test is completed.

NOTE:
When auto active test mode has to be cancelled halfway through test, turn ignition switch OFF.

CAUTION:

- **If auto active test mode cannot be actuated, check door switch system. Refer to DLK-57, "Description" (with Intelligent Key system), DLK-226, "Description" (without Intelligent Key system).**
- **Do not start the engine.**

Inspection in Auto Active Test Mode

When auto active test mode is actuated, the following 7 steps are repeated 3 times.

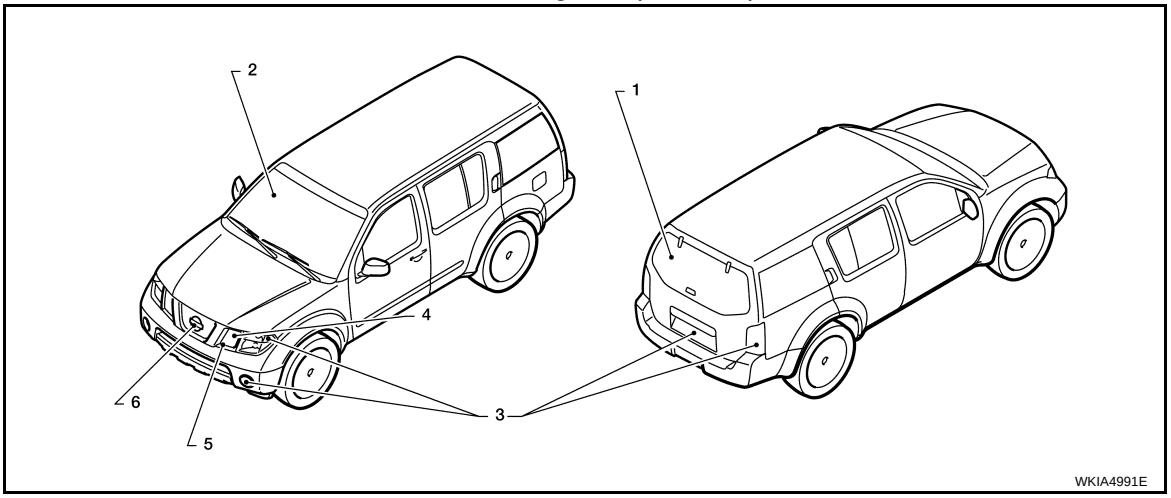

Operation sequence	Inspection Location	Operation
1	Rear window defogger	10 seconds
2	Front wipers	LO for 5 seconds → HI for 5 seconds

Operation sequence	Inspection Location	Operation
3	Tail, license, front fog and parking lamps	10 seconds
4	Headlamps	LO for 10 seconds → HI on-off for 5 seconds
5	A/C compressor (magnetic clutch)	ON ⇔ OFF 5 times
6	Cooling fan	10 seconds

Concept of auto active test

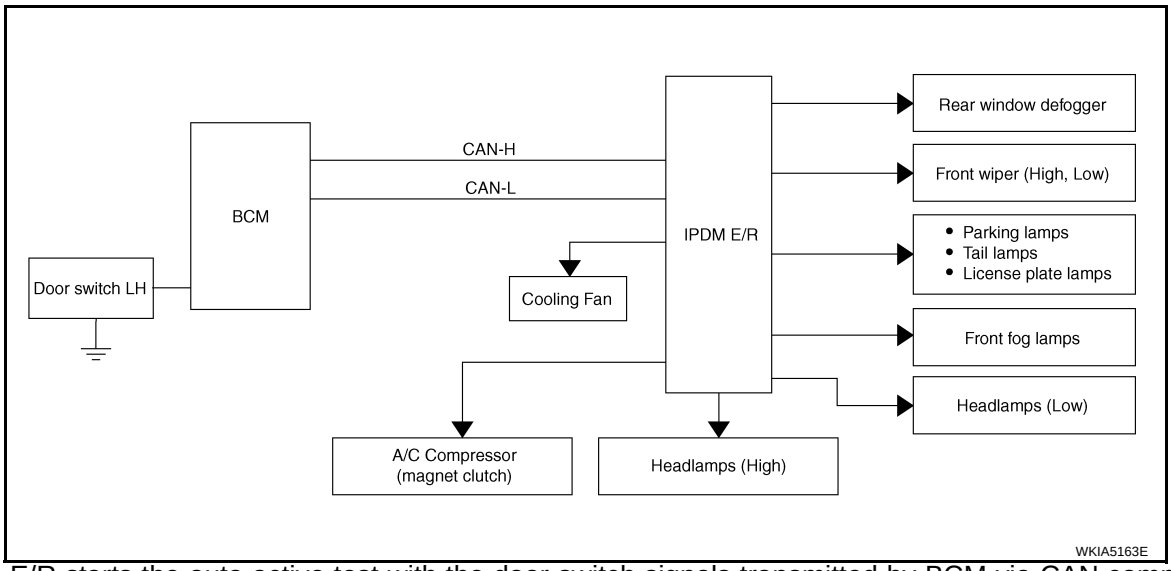

- IPDM E/R starts the auto active test with the door switch signals transmitted by BCM via CAN communication. Therefore, the CAN communication line between IPDM E/R and BCM is considered normal if the auto active test starts successfully.
- The auto active test facilitates troubleshooting if any systems controlled by IPDM E/R cannot be operated.

Diagnosis chart in auto active test mode

Symptom	Inspection contents		Possible cause
Oil pressure low warning indicator does not operate	Perform auto active test. Does the oil pressure low warning indicator operate?	YES	• IPDM E/R signal input circuit • ECM signal input circuit • CAN communication signal between ECM and combination meter
		NO	• CAN communication signal between IPDM E/R, BCM and combination meter
Oil pressure gauge does not operate	Perform auto active test. Does the oil pressure gauge operate?	YES	IPDM E/R signal input circuit
		NO	• CAN communication signal between IPDM E/R, BCM and combination meter
Rear window defogger does not operate	Perform auto active test. Does the rear window defogger operate?	YES	BCM signal input circuit
		NO	• Harness or connector between A/C and AV switch assembly and AV control unit • CAN communication signal between BCM and IPDM E/R

Symptom	Inspection contents		Possible cause
Any of the following components do not operate • Front wipers • Tail lamps • License plate lamps • Parking lamps • Front fog lamps • Headlamps (Hi, Lo)	Perform auto active test. Does the applicable system operate?	YES	BCM signal input system
		NO	• Lamp or front wiper motor malfunction • Lamp or front wiper motor ground circuit • Harness or connector between IPDM E/R and applicable system • IPDM E/R (integrated relay malfunction)
A/C compressor does not operate	Perform auto active test. Does the A/C compressor operate?	YES	• BCM signal input circuit • CAN communication signal between BCM and ECM • CAN communication signal between ECM and IPDM E/R
		NO	• Magnetic clutch malfunction • Harness or connector between IPDM E/R and magnetic clutch • IPDM E/R (integrated relay malfunction)
Cooling fan does not operate	Perform auto active test. Does the cooling fan operate?	YES	• ECM signal input circuit • CAN communication signal between ECM and IPDM E/R
		NO	• Cooling fan motor malfunction • Harness or connector between IPDM E/R and cooling fan • IPDM E/R (integrated relay malfunction)

CONSULT - III Function (IPDM E/R)

INFOID:0000000004409573

APPLICATION ITEM

CONSULT-III performs the following functions via CAN communication with IPDM E/R.

Diagnosis mode	Description
ECU Identification	Allows confirmation of IPDM E/R part number.
Self Diagnostic Result	Displays the diagnosis results judged by IPDM E/R.
Data Monitor	Displays the real-time input/output data from IPDM E/R input/output data.
Active Test	IPDM E/R can provide a drive signal to electronic components to check their operations.
CAN Diag Support Monitor	The results of transmit/receive diagnosis of CAN communication can be read.

SELF DIAGNOSTIC

Refer to PCS-31, "DTC Index".

DATA MONITOR

Monitor item

Monitor Item [Unit]	MAIN SIGNALS	Description
MOTOR FAN REQ [1/2/3/4]	×	Displays the status of the cooling fan speed request signal received from ECM via CAN communication.
A/C COMP REQ [OFF/ON]	×	Displays the status of the A/C request signal received from AV control unit via CAN communication.
TAIL&CLR REQ [OFF/ON]	×	Displays the status of the position light request signal received from BCM via CAN communication.
HL LO REQ [OFF/ON]	×	Displays the status of the low beam request signal received from BCM via CAN communication.
HL HI REQ [OFF/ON]	×	Displays the status of the high beam request signal received from BCM via CAN communication.
FR FOG REQ [OFF/ON]	×	Displays the status of the front fog lamp request signal received from BCM via CAN communication.
HL WASHER REQ [OFF/ON]		**NOTE:** This item is displayed, but cannot be monitored.
FR WIP REQ [STOP/1LOW/LOW/HI]	×	Displays the status of the front wiper request signal received from BCM via CAN communication.
WIP AUTO STOP [STOP P/ACT P]	×	Displays the status of the front wiper auto stop signal judged by IPDM E/R.
WIP PROT [OFF/Block]	×	Displays the status of the front wiper fail-safe operation judged by IPDM E/R.
ST RLY REQ [OFF/ON]		Displays the status of the starter request signal received from ECM via CAN communication.
IGN RLY [OFF/ON]	×	Displays the status of the ignition relay judged by IPDM E/R.
RR DEF REQ [OFF/ON]	×	Displays the status of the rear defogger request signal received from AV control unit via CAN communication.
OIL P SW [OPEN/CLOSE]		Displays the status of the oil pressure switch judged by IPDM E/R.
DTRL REQ [OFF]		**NOTE:** This item is displayed, but cannot be monitored.
HOOD SW [OPEN/CLOSE]		**NOTE:** This item is displayed, but cannot be monitored.
THFT HRN REQ [OFF/ON]		Displays the status of the theft warning horn request signal received from BCM via CAN communication.
HORN CHIRP [OFF/ON]		Displays the status of the horn reminder signal received from BCM via CAN communication.

ACTIVE TEST

Test item

Test item	Operation	Description
REAR DEFOGGER	OFF	OFF
	ON	Operates rear window defogger relay.
FRONT WIPER	OFF	OFF
	LO	Operates the front wiper relay.
	HI	Operates the front wiper relay and front wiper high relay.
HEAD LAMP WASHER	ON	—

Test item	Operation	Description
MOTOR FAN	1	OFF
	2	OFF
	3	Operates the cooling fan relay.
	4	Operates the cooling fan relay.
EXTERNAL LAMPS	OFF	OFF
	TAIL	Operates the tail lamp relay.
	LO	Operates the headlamp low relay.
	HI	Operates the headlamp low relay and ON/OFF the headlamp high relay at 1 second intervals.
	FOG	Operates the front fog lamp relay
HORN	ON	Operates horn relay for 20 ms.

COMPONENT DIAGNOSIS

WIPER AND WASHER FUSE

Description

INFOID:0000000003938650

Fuse list

Unit	Location	Fuse No.	Capacity
Front wiper motor	IPDM E/R	39	30 A
Front and rear washer motor	Fuse block (J/B)	15	10 A

Diagnosis Procedure

INFOID:0000000003938651

1. CHECK FUSES

Check that the following fuses are not blown.

Unit	Location	Fuse No.	Capacity
Front wiper motor	IPDM E/R	39	30 A
Front and rear washer motor	Fuse block (J/B)	15	10 A

Is the fuse blown?

YES >> Replace the fuse after repairing the applicable circuit.
NO >> The fuse is normal.

FRONT WIPER MOTOR LO CIRCUIT

Component Function Check

INFOID:0000000003938652

1. CHECK FRONT WIPER LO OPERATION

IPDM E/R AUTO ACTIVE TEST
1. Start IPDM E/R auto active test. Refer to PCS-12, "Diagnosis Description".
2. Check that the front wiper operates at the LO operation.

CONSULT-III ACTIVE TEST
1. Select "FRONT WIPER" of IPDM E/R active test item.
2. While operating the test item, check front wiper operation.

LO : Front wiper (LO) operation
OFF : Stop the front wiper.

Is front wiper (LO) operation normal?

YES >> Front wiper motor LO circuit is normal.
NO >> Refer to WW-19, "Diagnosis Procedure".

Diagnosis Procedure

INFOID:0000000003938653

1. CHECK FRONT WIPER MOTOR FUSE

1. Turn the ignition switch OFF.
2. Check that the following fuse is not blown.

Unit	Location	Fuse No.	Capacity
Front wiper motor	IPDM E/R	39	30 A

Is the fuse blown?

YES >> GO TO 2
NO >> GO TO 3

2. CHECK FRONT WIPER MOTOR (LO) SHORT CIRCUIT

1. Disconnect IPDM E/R and front wiper motor.
2. Check continuity between IPDM E/R harness connector and ground.

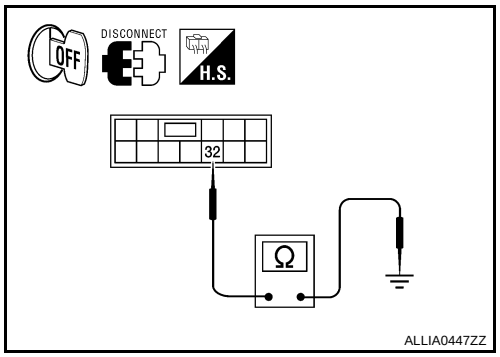

IPDM E/R		Ground	Continuity
Connector	Terminal		
E121	32		No

Does continuity exist?

YES >> Repair or replace harness.
NO >> Replace the fuse. (Replace IPDM E/R if the fuse is blown again.)

3. CHECK FRONT WIPER MOTOR (LO) OUTPUT VOLTAGE

CONSULT-III ACTIVE TEST

1. Turn the ignition switch ON.
2. Select "FRONT WIPER" of IPDM E/R active test item.
3. While operating the test item, check voltage between IPDM E/R harness connector and ground.

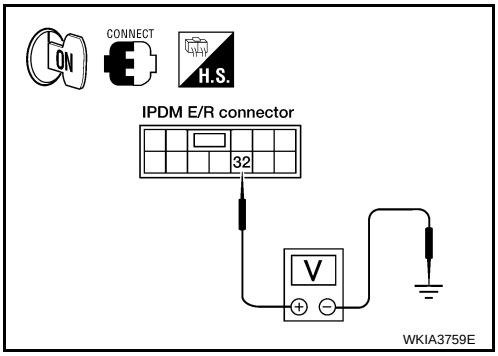

Terminals			Test item	Voltage (Approx.)
(+)		(-)		
IPDM E/R		Ground	FRONT WIPER	
Connector	Terminal			
E121	32		LO	Battery voltage
			OFF	0V

Is the measurement value normal?

YES >> GO TO 4
NO >> Replace IPDM E/R. Refer to PCS-33, "Removal and Installation of IPDM E/R".

4. CHECK FRONT WIPER MOTOR (LO) OPEN CIRCUIT

1. Turn the ignition switch OFF.
2. Disconnect IPDM E/R and front wiper motor.
3. Check continuity between IPDM E/R harness connector and front wiper motor harness connector.

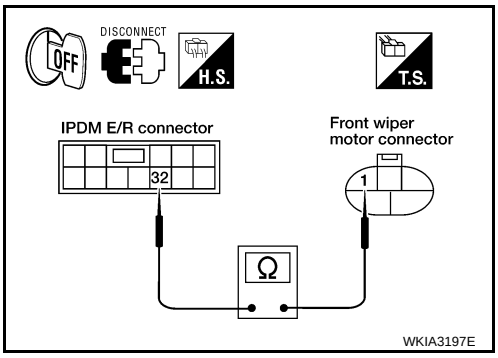

IPDM E/R		Front wiper motor		Continuity
Connector	Terminal	Connector	Terminal	
E121	32	E23	1	Yes

Does continuity exist?

YES >> Replace front wiper motor. Refer to WW-78, "Removal and Installation".
NO >> Repair or replace harness.

FRONT WIPER MOTOR HI CIRCUIT

Component Function Check

INFOID:0000000003938654

1. CHECK FRONT WIPER HI OPERATION

IPDM E/R AUTO ACTIVE TEST
1. Start IPDM E/R auto active test. Refer to PCS-12, "Diagnosis Description".
2. Check that the front wiper operates at the HI operation.

CONSULT-III ACTIVE TEST
1. Select "FRONT WIPER" of IPDM E/R active test item.
2. While operating the test item, check front wiper operation.

HI : Front wiper (HI) operation
OFF : Stop the front wiper.

Is front wiper (HI) operation normal?

YES >> Front wiper motor HI circuit is normal.
NO >> Refer to WW-21, "Diagnosis Procedure".

Diagnosis Procedure

INFOID:0000000003938655

1. CHECK FRONT WIPER MOTOR FUSE

1. Turn the ignition switch OFF.
2. Check that the following fuse is not blown.

Unit	Location	Fuse No.	Capacity
Front wiper motor	IPDM E/R	39	30 A

Is the fuse blown?

YES >> GO TO 2
NO >> GO TO 3

2. CHECK FRONT WIPER MOTOR (HI) SHORT CIRCUIT

1. Disconnect IPDM E/R and front wiper motor.
2. Check continuity between IPDM E/R harness connector and ground.

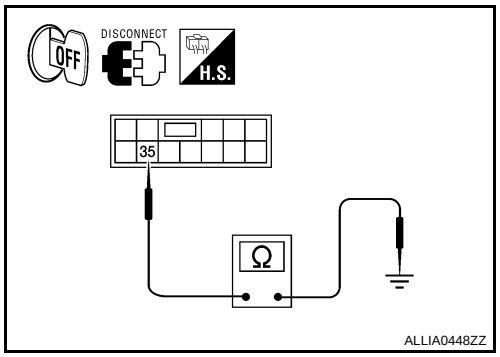

IPDM E/R		Ground	Continuity
Connector	Terminal		
E121	35		No

Does continuity exist?

YES >> Repair or replace harness.
NO >> Replace the fuse. (Replace IPDM E/R if the fuse is blown again.)

3. CHECK FRONT WIPER MOTOR (HI) OUTPUT VOLTAGE

CONSULT-III ACTIVE TEST

1. Turn the ignition switch ON.
2. Select "FRONT WIPER" of IPDM E/R active test item.
3. While operating the test item, check voltage between IPDM E/R harness connector and ground.

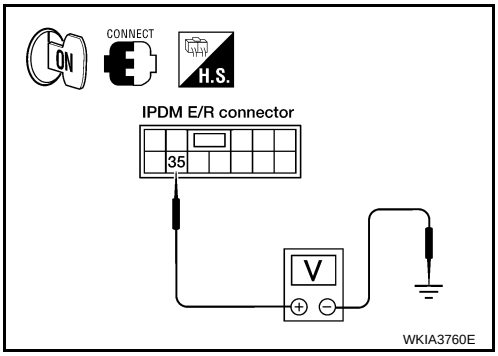

Terminals			Test item	Voltage (Approx.)
(+)		(-)		
IPDM E/R		Ground	FRONT WIPER	
Connector	Terminal			
E121	35		HI	Battery voltage
			OFF	0 V

Is the measurement value normal?

YES >> GO TO 4
NO >> Replace IPDM E/R. Refer to PCS-33, "Removal and Installation of IPDM E/R".

4. CHECK FRONT WIPER MOTOR (HI) OPEN CIRCUIT

1. Turn the ignition switch OFF.
2. Disconnect IPDM E/R and front wiper motor.
3. Check continuity between IPDM E/R harness connector and front wiper motor harness connector.

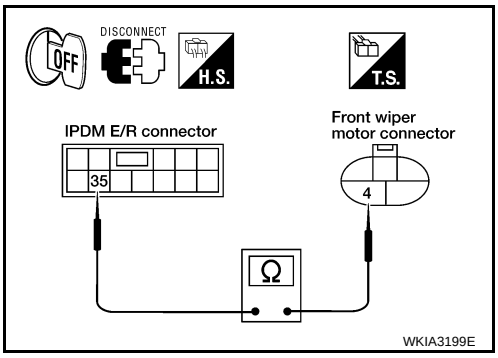

IPDM E/R		Front wiper motor		Continuity
Connector	Terminal	Connector	Terminal	
E121	35	E23	4	Yes

Does continuity exist?

YES >> Replace front wiper motor. Refer to WW-78, "Removal and Installation".
NO >> Repair or replace harness.

FRONT WIPER AUTO STOP SIGNAL CIRCUIT

Component Function Check

INFOID:0000000003938656

1. CHECK FRONT WIPER (AUTO STOP) SIGNAL CHECK

CONSULT-III DATA MONITOR
1. Select "FR WIPER STOP" of IPDM E/R data monitor item.
2. Operate the front wiper.
3. Check that "FR WIPER STOP" changes to "ON" and "OFF" linked with the wiper operation.

Monitor item	Condition		Monitor status
FR WIPER STOP	Front wiper motor	Stop position	ON
		Except stop position	OFF

Is the status of item normal?

YES >> Front wiper auto stop signal circuit is normal.
NO >> Refer to WW-23, "Diagnosis Procedure".

Diagnosis Procedure

INFOID:0000000003938657

1. CHECK FRONT WIPER MOTOR (AUTO STOP) OUTPUT VOLTAGE

1. Turn the ignition switch ON.
2. Check voltage between IPDM E/R harness connector and ground.

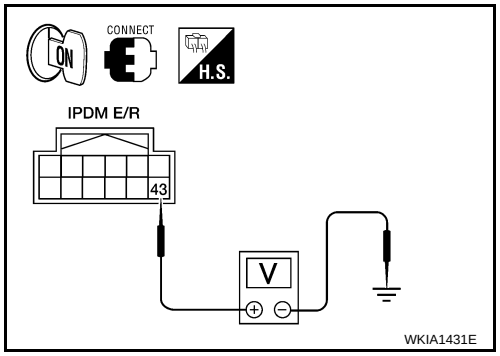

Terminals			Voltage (Approx.)
(+)		(-)	
IPDM E/R		Ground	
Connector	Terminal		
E122	43		Battery voltage

Is the measurement value normal?

YES >> GO TO 3
NO >> GO TO 2

2. CHECK FRONT WIPER MOTOR (AUTO STOP) SHORT CIRCUIT

1. Turn the ignition switch OFF.
2. Disconnect IPDM E/R and front wiper motor.
3. Check continuity between IPDM E/R harness connector and ground.

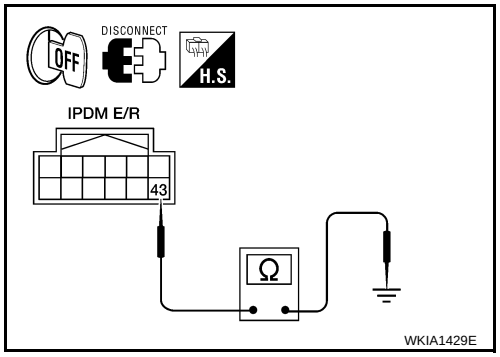

IPDM E/R		Ground	Continuity
Connector	Terminal		
E122	43		No

Does continuity exist?

YES >> Repair or replace harness.
NO >> Replace IPDM E/R. Refer to PCS-33, "Removal and Installation of IPDM E/R".

3. CHECK FRONT WIPER MOTOR (AUTO STOP) CIRCUIT CONTINUITY

Check continuity between IPDM E/R harness connector and front wiper motor harness connector.

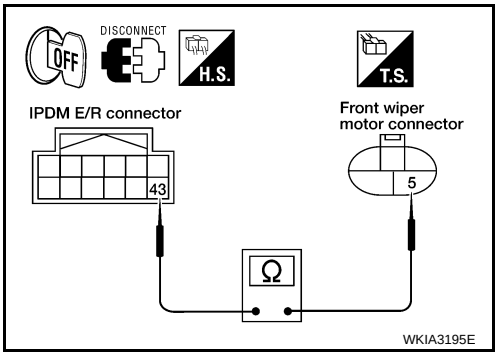

IPDM E/R		Front wiper motor		Continuity
Connector	Terminal	Connector	Terminal	
E122	43	E23	5	Yes

Does continuity exist?

YES >> Replace front wiper motor. Refer to WW-78, "Removal and Installation".

NO >> Repair or replace harness.

FRONT WIPER MOTOR GROUND CIRCUIT

Diagnosis Procedure

INFOID:0000000003938658

1. CHECK FRONT WIPER MOTOR (GROUND) OPEN CIRCUIT

1. Turn the ignition switch OFF.
2. Disconnect front wiper motor.
3. Check continuity between front wiper motor harness connector and ground.

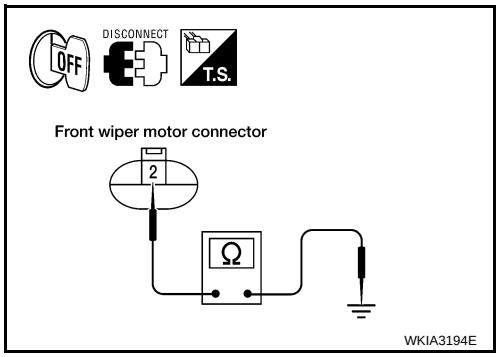

Front wiper motor		Ground	Continuity
Connector	Terminal		
E23	2		Yes

Does continuity exist?

YES >> Front wiper motor ground circuit is normal.
NO >> Repair or replace harness.

WASHER SWITCH

Description

INFOID:0000000003938659

- Washer switch is integrated with combination switch.
- Combination switch switches polarity between front washer operating and rear washer operating to supply power to the front and rear washer motor on ground.

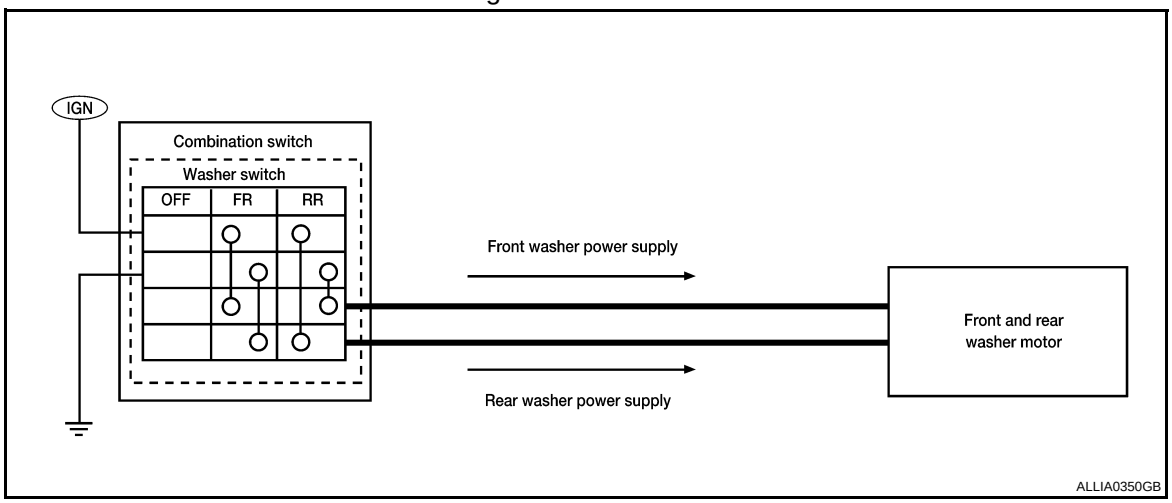

Component Inspection

INFOID:0000000003938660

1. CHECK FRONT WASHER SWITCH

1. Turn the ignition switch OFF.
2. Disconnect combination switch.
3. Check continuity between the combination switch terminals.

A: Terminal 14
B: Terminal 12
C: Terminal 13
D: Terminal 11

	OFF	FR	RR
A		○	○
B		○	○
C		○	○
D		○	○

JPLIA0164GB

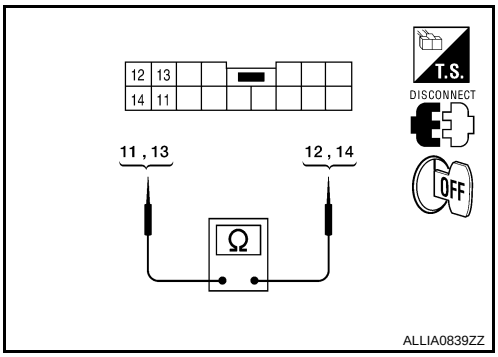

Combination switch		Condition	Continuity
Terminal			
11	12	Front washer switch ON	Yes
13	14		

Does continuity exist?

YES >> GO TO 2
NO >> Replace combination switch. Refer to WW-78, "Removal and Installation".

2. CHECK REAR WASHER SWITCH

Check continuity between the combination switch terminals.

A: Terminal 14
B: Terminal 12
C: Terminal 13
D: Terminal 11

	OFF	FR	RR
A		○	○
B		○	○
C		○	○
D		○	○

JPLIA0164GB

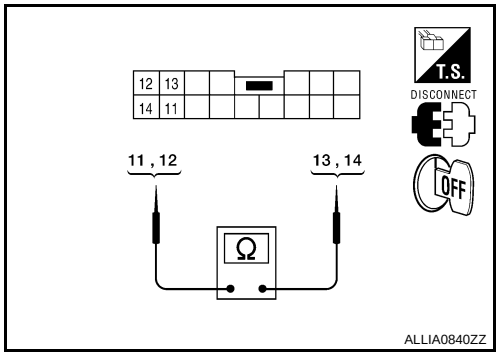

Combination switch		Condition	Continuity
Terminal			
11	14	Rear washer switch ON	Yes
12	13		

Does continuity exist?

YES >> Wiper and washer switch is normal.
NO >> Replace combination switch. Refer to WW-78, "Removal and Installation".

REAR WIPER MOTOR CIRCUIT

Component Function Check

INFOID:0000000003938661

1. CHECK REAR WIPER ON OPERATION

CONSULT-III ACTIVE TEST
1. Select "RR WIPER" of BCM active test item.
2. While operating the test item, check rear wiper operation.

ON : Rear wiper ON operation
OFF : Stop the rear wiper.

Is rear wiper operation normal?

YES >> Rear wiper motor circuit is normal.
NO >> Refer to WW-28, "Diagnosis Procedure".

Diagnosis Procedure

INFOID:0000000003938662

1. CHECK REAR WIPER MOTOR OUTPUT VOLTAGE

CONSULT-III ACTIVE TEST
1. Turn the ignition switch OFF.
2. Disconnect rear wiper motor.
3. Turn the ignition switch ON.
4. Select "RR WIPER" of BCM active test item.
5. While operating the test item, check voltage between BCM harness connector and ground.

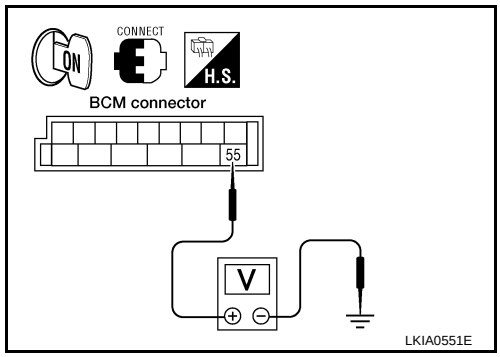

Terminals			Test item	Voltage (Approx.)
(+)		(–)		
BCM			REAR WIPER	
Connector	Terminal			
M19	55	Ground	ON	Battery voltage
			OFF	0V

Is the measurement value normal?

YES >> GO TO 2
NO >> GO TO 3

2. CHECK REAR WIPER MOTOR GROUND CIRCUIT

1. Turn the ignition switch OFF.
2. Check continuity between rear wiper motor harness connector and ground.

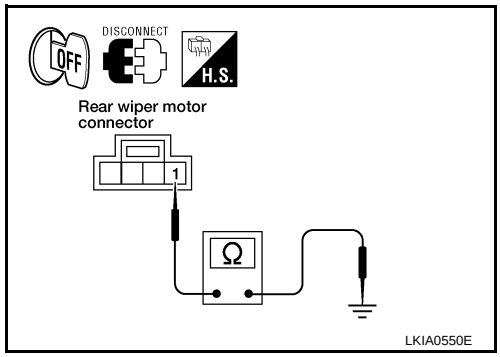

Rear wiper motor		Ground	Continuity
Connector	Terminal		
D602	42		Yes

Does continuity exist?

YES >> Replace rear wiper motor. Refer to WW-83, "Removal and Installation".
NO >> Repair or replace harness.

3. CHECK GLASS HATCH AJAR SWITCH CIRCUIT

1. Disconnect BCM.
2. Turn ignition switch OFF.

3. Make sure hatch glass is closed
4. Check continuity between BCM harness connector and ground.

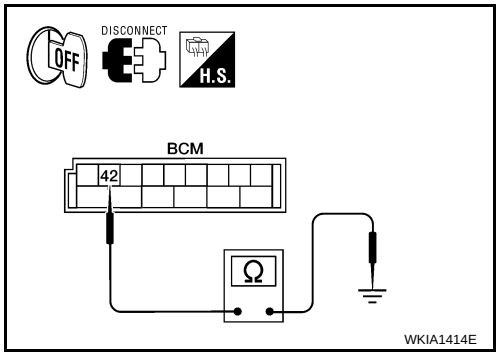

BCM		Ground	Continuity
Connector	Terminal		
M19	42		No

Does continuity exist?

YES >> GO TO 4.
NO >> Repair harness if shorted. If not, refer to SEC-45, "Diagnosis Procedure" (with Intelligent Key system) or SEC-147, "Diagnosis Procedure" (without Intelligent Key system).

4. CHECK REAR WIPER MOTOR OPEN CIRCUIT

1. Check continuity between BCM harness connector and rear wiper motor harness connector.

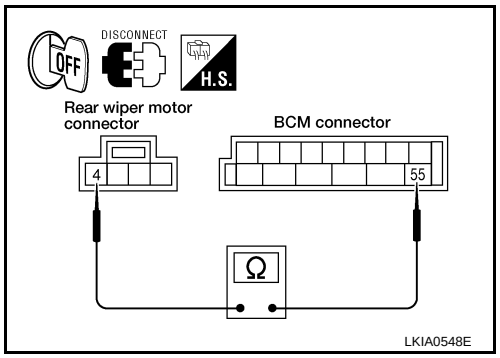

BCM		Rear wiper motor		Continuity
Connector	Terminal	Connector	Terminal	
M19	55	D602	4	Yes

Does continuity exist?

YES >> GO TO 5
NO >> Repair or replace harness.

5. CHECK REAR WIPER MOTOR SHORT CIRCUIT

Check continuity between BCM harness connector and ground.

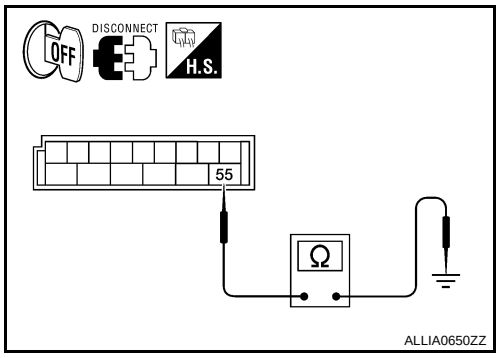

BCM		Ground	Continuity
Connector	Terminal		
M19	55		No

Does continuity exist?

YES >> Repair or replace harness.
NO >> Replace BCM. Refer to BCS-59, "Removal and Installation".

REAR WIPER AUTO STOP SIGNAL CIRCUIT

Component Function Check

INFOID:0000000003938663

1. CHECK REAR WIPER (AUTO STOP) OPERATION

CONSULT-III DATA MONITOR
1. Select "WIPER" of BCM data monitor item.
2. Operate the rear wiper.
3. Check that "RR WIPER STOP" changes to "ON" and "OFF" linked with the wiper operation.

Monitor item	Condition		Monitor status
RR WIPER STOP	Rear wiper motor	Stop position	ON
		Except stop position	OFF

Is the status of item normal?

YES >> Rear wiper auto stop signal circuit is normal.
NO >> Refer to WW-30, "Diagnosis Procedure".

Diagnosis Procedure

INFOID:0000000003938664

1. CHECK REAR WIPER MOTOR AUTO STOP CIRCUITS

1. Turn ignition switch OFF.
2. Disconnect BCM and rear wiper motor.
3. Check continuity between BCM harness connector terminals and rear wiper motor harness connector terminals.

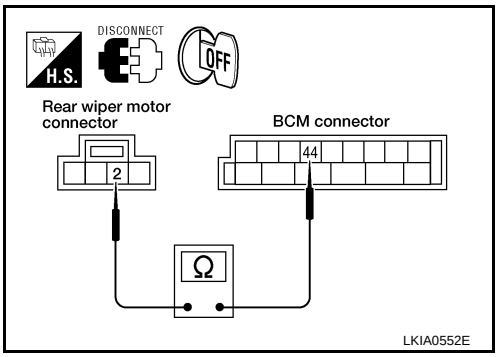

BCM		Rear wiper motor		Continuity
Connector	Terminal	Connector	Terminal	
M19	44	D602	2	Yes

Is inspection result normal?

YES >> GO TO 2
NO >> Repair or replace harness.

2. CHECK AUTO STOP CIRCUITS FOR SHORT TO GROUND

Check continuity between BCM harness connector terminals and ground.

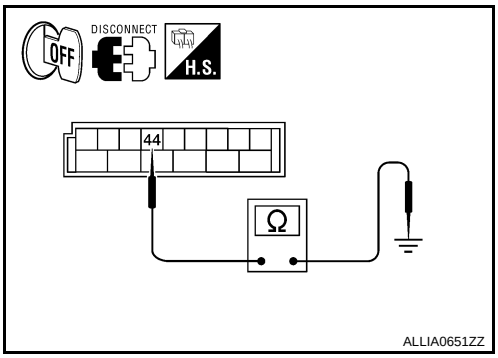

BCM		Ground	Continuity
Connector	Terminal		
M19	44		No

Is inspection result normal?

YES >> Replace BCM. Refer to BCS-59, "Removal and Installation".
NO >> Repair or replace harness.

FRONT WIPER AND WASHER SYSTEM

Wiring Diagram

INFOID:0000000003938665

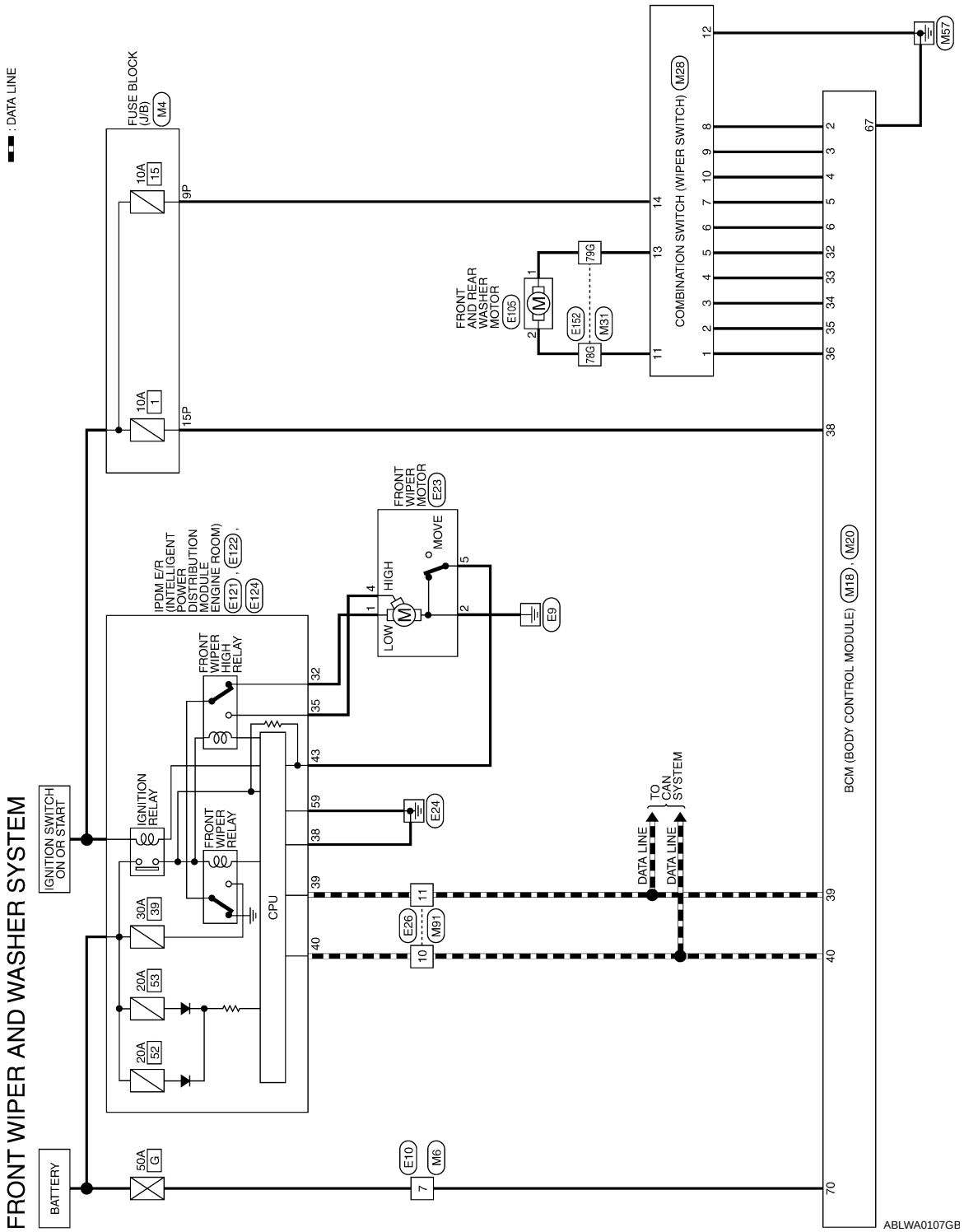

FRONT WIPER AND WASHER SYSTEM CONNECTORS

Connector No.	M4
Connector Name	FUSE BLOCK (J/B)
Connector Color	WHITE

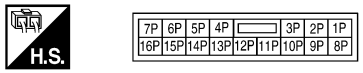

Terminal No.	Color of Wire	Signal Name
9P	W/G	–
15P	W/R	–

Connector No.	M6
Connector Name	WIRE TO WIRE
Connector Color	WHITE

Terminal No.	Color of Wire	Signal Name
7	W	–

Connector No.	M18
Connector Name	BCM (BODY CONTROL MODULE)
Connector Color	WHITE

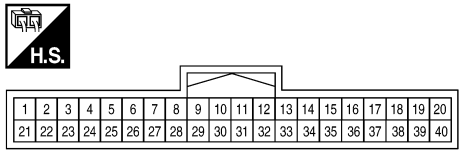

Terminal No.	Color of Wire	Signal Name
2	P	INPUT 5
3	SB	INPUT 4
4	V	INPUT 3
5	L	INPUT 2
6	R	INPUT 1
32	O	OUTPUT 5
33	GR	OUTPUT 4
34	G	OUTPUT 3
35	BR	OUTPUT 2
36	LG	OUTPUT 1
38	W/R	IGN SW
39	L	CAN-H
40	P	CAN-L

Connector No.	M20
Connector Name	BCM (BODY CONTROL MODULE)
Connector Color	BLACK

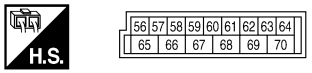

Terminal No.	Color of Wire	Signal Name
67	B	GND (POWER)
70	W	BAT (F/L)

ABLIA0384GB

Connector No.	M28
Connector Name	COMBINATION SWITCH
Connector Color	WHITE

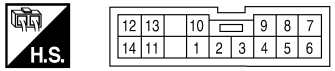

Terminal No.	Color of Wire	Signal Name
1	LG	INPUT 1
2	BR	INPUT 2
3	G	INPUT 3

Terminal No.	Color of Wire	Signal Name
4	GR	INPUT 4
5	O	INPUT 5
6	R	OUTPUT 1
7	L	OUTPUT 2
8	P	OUTPUT 5
9	SB	OUTPUT 4
10	V	OUTPUT 3
11	O	WASHER MOTOR (RR+)
12	B	GND
13	L	WASHER MOTOR (RR-)
14	W/G	IGN

Connector No.	M31
Connector Name	WIRE TO WIRE
Connector Color	WHITE

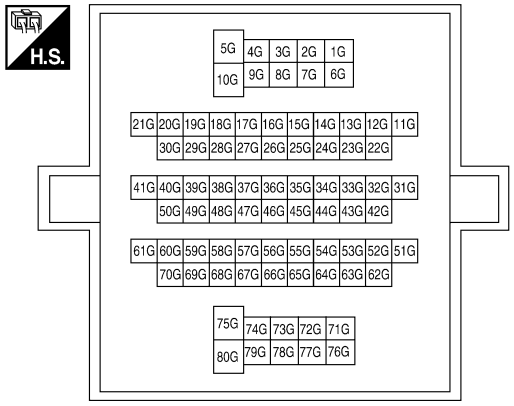

Terminal No.	Color of Wire	Signal Name
78G	O	–
79G	L	–

Connector No.	M91
Connector Name	WIRE TO WIRE
Connector Color	WHITE

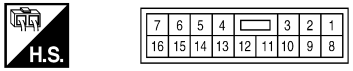

Terminal No.	Color of Wire	Signal Name
10	P	–
11	L	–

ABLIA0385GB

Connector No.	E10
Connector Name	WIRE TO WIRE
Connector Color	WHITE

Terminal No.	Color of Wire	Signal Name
7	W	–

Connector No.	E23
Connector Name	FRONT WIPER MOTOR
Connector Color	GRAY

Terminal No.	Color of Wire	Signal Name
1	GR	–
2	B	–
4	L	–
5	G	–

Connector No.	E26
Connector Name	WIRE TO WIRE
Connector Color	WHITE

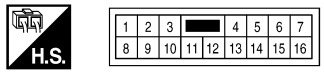

Terminal No.	Color of Wire	Signal Name
10	P	–
11	L	–

Connector No.	E105
Connector Name	FRONT AND REAR WASHER MOTOR
Connector Color	BLACK

Terminal No.	Color of Wire	Signal Name
1	L	–
2	O	–

Connector No.	E121
Connector Name	IPDM E/R (INTELLIGENT POWER DISTRIBUTION MODULE ENGINE ROOM)
Connector Color	BROWN

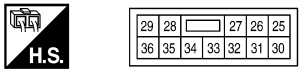

Terminal No.	Color of Wire	Signal Name
32	GR	FR WIPER LO
35	L	FR WIPER HI

Connector No.	E122
Connector Name	IPDM E/R (INTELLIGENT POWER DISTRIBUTION MODULE ENGINE ROOM)
Connector Color	WHITE

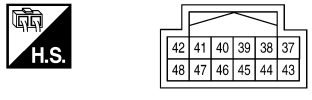

Terminal No.	Color of Wire	Signal Name
38	B	SIGNAL GND
39	L	CAN-H
40	P	CAN-L
43	G	AUTO STOP SW

ABLIA0386GB

Connector No.	E124
Connector Name	IPDM E/R (INTELLIGENT POWER DISTRIBUTION MODULE ENGINE ROOM)
Connector Color	BLACK

Terminal No.	Color of Wire	Signal Name
59	B	GND (POWER)

Connector No.	E152
Connector Name	WIRE TO WIRE
Connector Color	WHITE

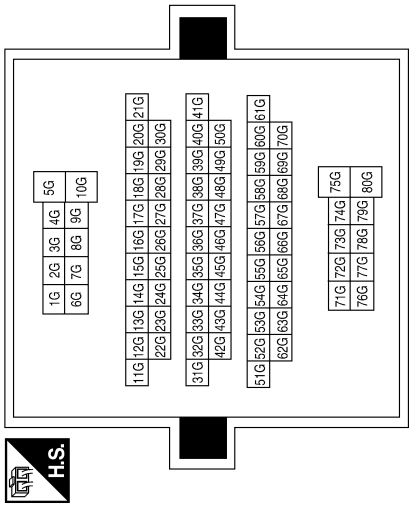

Terminal No.	Color of Wire	Signal Name
78G	O	–
79G	L	–

ABLIA0387GB

REAR WIPER AND WASHER SYSTEM

Wiring Diagram

INFOID:0000000003938666

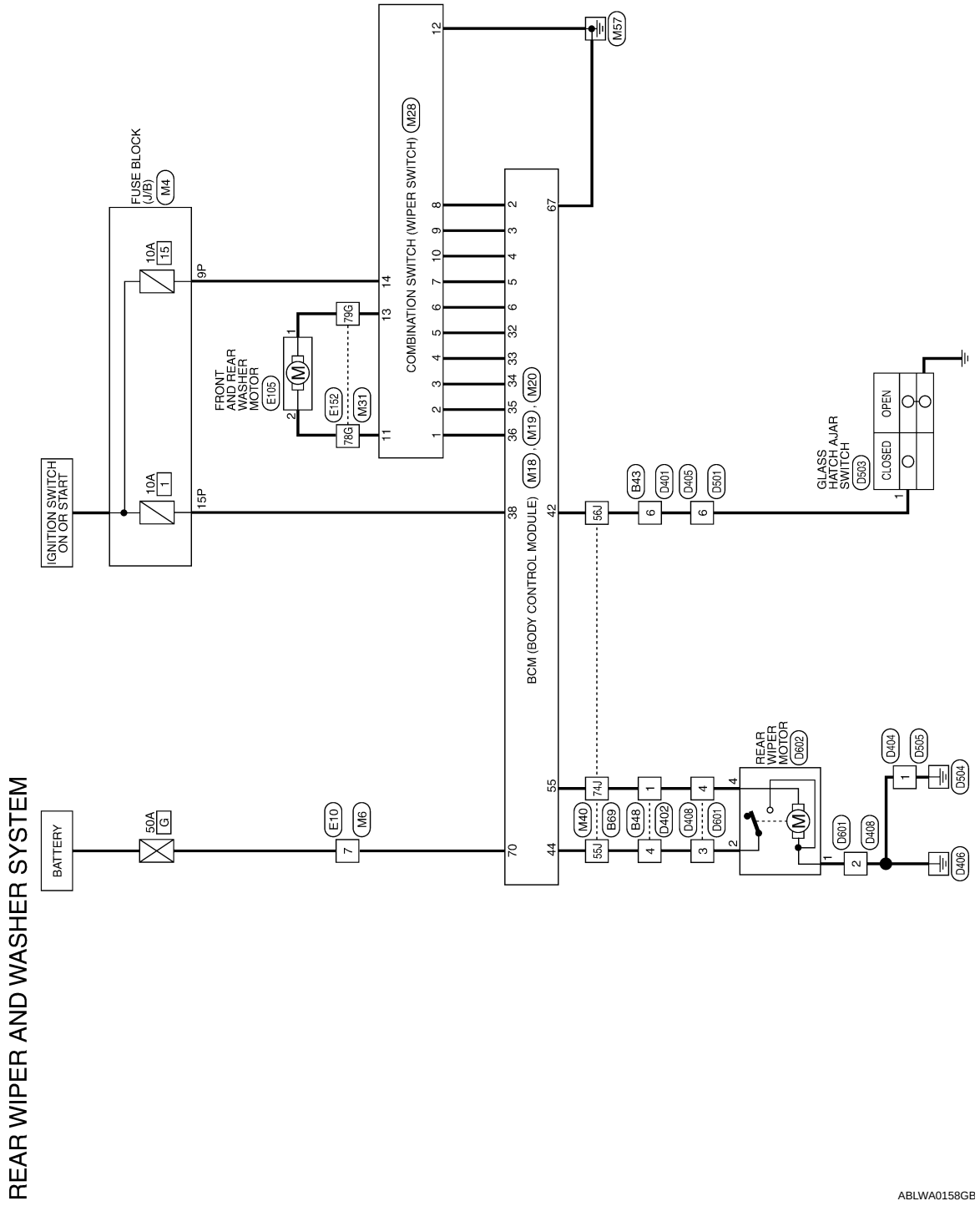

REAR WIPER AND WASHER SYSTEM CONNECTORS

Connector No.	M4
Connector Name	FUSE BLOCK (J/B)
Connector Color	WHITE

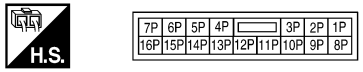

Terminal No.	Color of Wire	Signal Name
9P	W/G	–
15P	W/R	–

Connector No.	M6
Connector Name	WIRE TO WIRE
Connector Color	WHITE

Terminal No.	Color of Wire	Signal Name
7	W	–

Connector No.	M18
Connector Name	BCM (BODY CONTROL MODULE)
Connector Color	WHITE

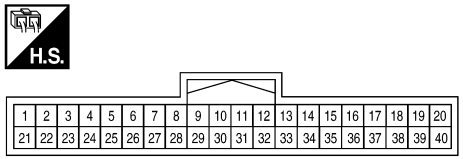

Terminal No.	Color of Wire	Signal Name
2	P	INPUT 5
3	SB	INPUT 4

Terminal No.	Color of Wire	Signal Name
4	V	INPUT 3
5	L	INPUT 2
6	R	INPUT 1
32	O	OUTPUT 5
33	GR	OUTPUT 4
34	G	OUTPUT 3
35	BR	OUTPUT 2
36	LG	OUTPUT 1
38	W/R	IGN SW

Connector No.	M19
Connector Name	BCM (BODY CONTROL MODULE)
Connector Color	WHITE

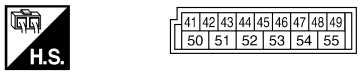

Terminal No.	Color of Wire	Signal Name
42	LG	GLASS HATCH SW
44	O	REAR WIPER AUTO STOP SW 1
55	W	REAR WIPER MOTOR OUTPUT 1

ABLIA0397GB

Connector No.	M20
Connector Name	BCM (BODY CONTROL MODULE)
Connector Color	BLACK

Terminal No.	Color of Wire	Signal Name
67	B	GND (POWER)
70	W	BAT (F/L)

Connector No.	M28
Connector Name	COMBINATION SWITCH
Connector Color	WHITE

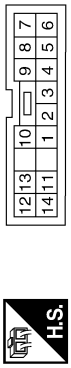

Terminal No.	Color of Wire	Signal Name
1	LG	INPUT 1
2	BR	INPUT 2
3	G	INPUT 3

Terminal No.	Color of Wire	Signal Name
4	GR	INPUT 4
5	O	INPUT 5
6	R	OUTPUT 1
7	L	OUTPUT 2
8	P	OUTPUT 5
9	SB	OUTPUT 4
10	V	OUTPUT 3
11	O	WASHER MOTO (RR+)
12	B	GND
13	L	WASHER MOTO (RR-)
14	W/G	IGN

Terminal No.	Color of Wire	Signal Name
78G	O	–
79G	L	–

Connector No.	M31
Connector Name	WIRE TO WIRE
Connector Color	WHITE

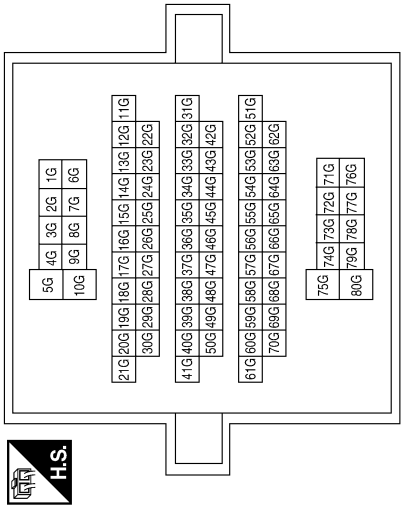

ABLIA0388GB

Connector No.	M40
Connector Name	WIRE TO WIRE
Connector Color	WHITE

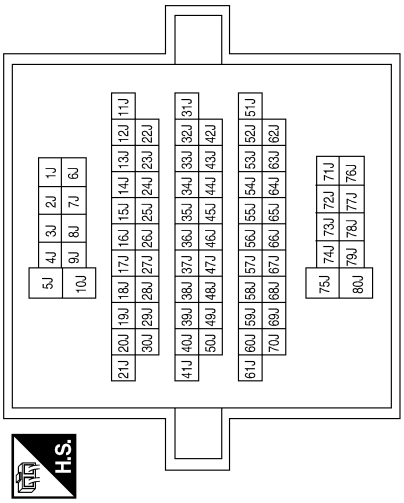

Terminal No.	Color of Wire	Signal Name
55J	O	–
56J	LG	–
74J	W	–

Connector No.	E10
Connector Name	WIRE TO WIRE
Connector Color	WHITE

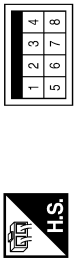

Terminal No.	Color of Wire	Signal Name
7	W	–

Connector No.	E105
Connector Name	FRONT AND REAR WASHER MOTOR
Connector Color	BLACK

Terminal No.	Color of Wire	Signal Name
1	L	–
2	O	–

Connector No.	E152
Connector Name	WIRE TO WIRE
Connector Color	WHITE

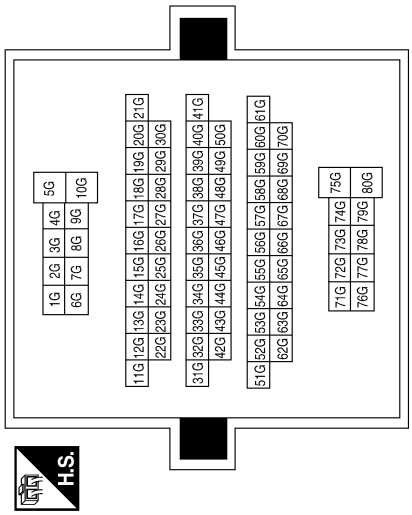

Terminal No.	Color of Wire	Signal Name
78G	O	–
79G	L	–

ABLIA0389GB

Connector No.	B43
Connector Name	WIRE TO WIRE
Connector Color	WHITE

Terminal No.	Color of Wire	Signal Name
6	LG	–

Connector No.	B48
Connector Name	WIRE TO WIRE
Connector Color	WHITE

Terminal No.	Color of Wire	Signal Name
1	W	–
4	O	–

Connector No.	B69
Connector Name	WIRE TO WIRE
Connector Color	WHITE

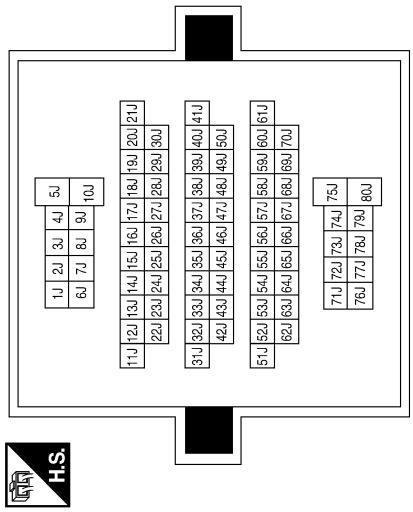

Terminal No.	Color of Wire	Signal Name
55J	O	–
56J	LG	–
74J	W	–

Connector No.	D401
Connector Name	WIRE TO WIRE
Connector Color	WHITE

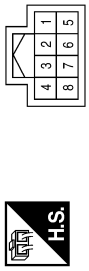

Terminal No.	Color of Wire	Signal Name
6	LG	–

ABLIA0390GB

Connector No.	D402
Connector Name	WIRE TO WIRE
Connector Color	WHITE

H.S.

Terminal No.	Color of Wire	Signal Name
1	W	–
4	O	–

Connector No.	D404
Connector Name	WIRE TO WIRE
Connector Color	WHITE

H.S.

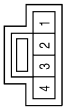

Terminal No.	Color of Wire	Signal Name
1	B	–

Connector No.	D405
Connector Name	WIRE TO WIRE
Connector Color	WHITE

H.S.

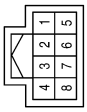

Terminal No.	Color of Wire	Signal Name
6	LG	–

Connector No.	D408
Connector Name	WIRE TO WIRE
Connector Color	WHITE

H.S.

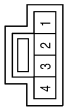

Terminal No.	Color of Wire	Signal Name
2	B	–
3	O	–
4	W	–

Connector No.	D501
Connector Name	WIRE TO WIRE
Connector Color	WHITE

H.S.

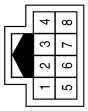

Terminal No.	Color of Wire	Signal Name
6	LG	–

Connector No.	D503
Connector Name	GLASS HATCH AJAR SWITCH
Connector Color	BLACK

H.S.

Terminal No.	Color of Wire	Signal Name
1	LG	–

ALLIA0312GB

Connector No.	D505
Connector Name	WIRE TO WIRE
Connector Color	WHITE

Terminal No.	Color of Wire	Signal Name
1	B	–

Connector No.	D601
Connector Name	WIRE TO WIRE
Connector Color	WHITE

Terminal No.	Color of Wire	Signal Name
2	R	–
3	O	–
4	W	–

Connector No.	D602
Connector Name	REAR WIPER MOTOR
Connector Color	WHITE

Terminal No.	Color of Wire	Signal Name
1	R	–
2	O	–
4	W	–

ABLIA0391GB

ECU DIAGNOSIS

BCM (BODY CONTROL MODULE)

Reference Value

INFOID:0000000004409574

VALUES ON THE DIAGNOSIS TOOL

Monitor Item	Condition	Value/Status
AIR COND SW	A/C switch OFF	OFF
	A/C switch ON	ON
AUT LIGHT SYS	Outside of the room is dark	OFF
	Outside of the room is bright	ON
AUTO LIGHT SW	Lighting switch OFF	OFF
	Lighting switch AUTO	ON
BACK DOOR SW	Back door closed	OFF
	Back door opened	ON
CDL LOCK SW	Door lock/unlock switch does not operate	OFF
	Press door lock/unlock switch to the LOCK side	ON
CDL UNLOCK SW	Door lock/unlock switch does not operate	OFF
	Press door lock/unlock switch to the UNLOCK side	ON
DOOR SW-AS	Front door RH closed	OFF
	Front door RH opened	ON
DOOR SW-DR	Front door LH closed	OFF
	Front door LH opened	ON
DOOR SW-RL	Rear door LH closed	OFF
	Rear door LH opened	ON
DOOR SW-RR	Rear door RH closed	OFF
	Rear door RH opened	ON
ENGINE RUN	Engine stopped	OFF
	Engine running	ON
FR FOG SW	Front fog lamp switch OFF	OFF
	Front fog lamp switch ON	ON
FR WASHER SW	Front washer switch OFF	OFF
	Front washer switch ON	ON
FR WIPER LOW	Front wiper switch OFF	OFF
	Front wiper switch LO	ON
FR WIPER HI	Front wiper switch OFF	OFF
	Front wiper switch HI	ON
FR WIPER INT	Front wiper switch OFF	OFF
	Front wiper switch INT	ON
FR WIPER STOP	Any position other than front wiper stop position	OFF
	Front wiper stop position	ON
HAZARD SW	When hazard switch is not pressed	OFF
	When hazard switch is pressed	ON
LIGHT SW 1ST	Lighting switch OFF	OFF
	Lighting switch 1st	ON

Monitor Item	Condition	Value/Status
HEADLAMP SW1	Headlamp switch OFF	OFF
	Headlamp switch 1st	ON
HEADLAMP SW2	Headlamp switch OFF	OFF
	Headlamp switch 1st	ON
HI BEAM SW	High beam switch OFF	OFF
	High beam switch HI	ON
H/L WASH SW	**NOTE:** The item is indicated, but not monitored	OFF
IGN ON SW	Ignition switch OFF or ACC	OFF
	Ignition switch ON	ON
IGN SW CAN	Ignition switch OFF or ACC	OFF
	Ignition switch ON	ON
INT VOLUME	Wiper intermittent dial is in a dial position 1 - 7	1 - 7
I-KEY LOCK[1]	LOCK button of Intelligent Key is not pressed	OFF
	LOCK button of Intelligent Key is pressed	ON
I-KEY UNLOCK[1]	UNLOCK button of Intelligent Key is not pressed	OFF
	UNLOCK button of Intelligent Key is pressed	ON
KEY ON SW	Mechanical key is removed from key cylinder	OFF
	Mechanical key is inserted to key cylinder	ON
KEYLESS LOCK[2]	LOCK button of key fob is not pressed	OFF
	LOCK button of key fob is pressed	ON
KEYLESS UNLOCK[2]	UNLOCK button of key fob is not pressed	OFF
	UNLOCK button of key fob is pressed	ON
OIL PRESS SW	• Ignition switch OFF or ACC • Engine running	OFF
	Ignition switch ON	ON
PASSING SW	Other than lighting switch PASS	OFF
	Lighting switch PASS	ON
PUSH SW[1]	Return to ignition switch to LOCK position	OFF
	Press ignition switch	ON
REAR DEF SW	Rear window defogger switch OFF	OFF
	Rear window defogger switch ON	ON
RKE LOCK AND UNLOCK[2]	**NOTE:** The item is indicated, but not monitored	OFF
		ON
RR WASHER SW	Rear washer switch OFF	OFF
	Rear washer switch ON	ON
RR WIPER INT	Rear wiper switch OFF	OFF
	Rear wiper switch INT	ON
RR WIPER ON	Rear wiper switch OFF	OFF
	Rear wiper switch ON	ON
RR WIPER STOP	Rear wiper stop position	OFF
	Other than rear wiper stop position	ON
TAIL LAMP SW	Lighting switch OFF	OFF
	Lighting switch 1ST	ON

Monitor Item	Condition	Value/Status
TRNK OPNR SW	When back door opener switch is not pressed	OFF
	When back door opener switch is pressed	ON
TURN SIGNAL L	Turn signal switch OFF	OFF
	Turn signal switch LH	ON
TURN SIGNAL R	Turn signal switch OFF	OFF
	Turn signal switch RH	ON
VEHICLE SPEED	While driving	Equivalent to speedometer reading

1: With Intelligent Key

2: With remote keyless entry system

Terminal Layout

INFOID:0000000004409575

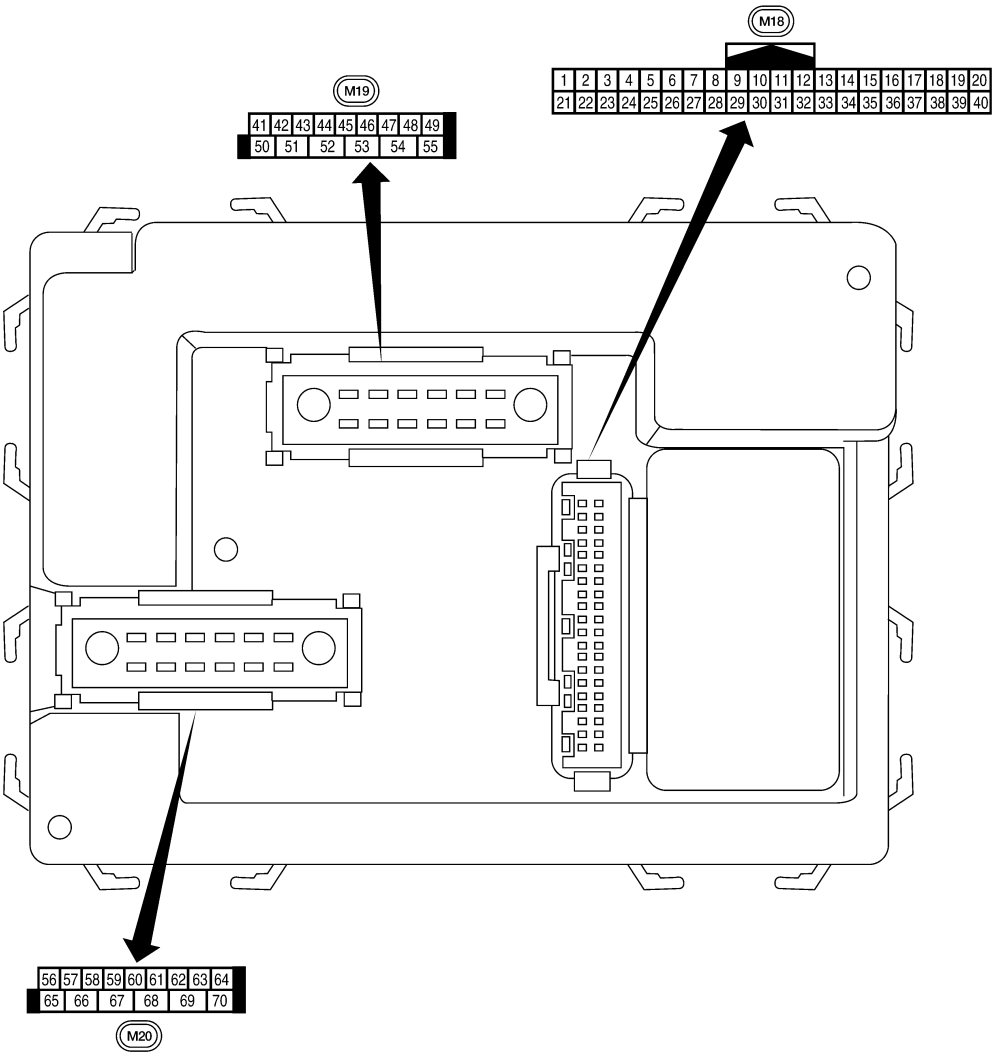

LIIA2443E

Physical Values

INFOID:0000000004409576

Terminal	Wire color	Signal name	Signal input/ output	Measuring condition		Reference value or waveform (Approx.)
				Ignition switch	Operation or condition	
1	BR	Ignition keyhole illumination	Output	OFF	Door is locked (SW OFF)	Battery voltage
					Door is unlocked (SW ON)	0V
2	P	Combination switch input 5	Input	ON	Lighting, turn, wiper OFF Wiper dial position 4	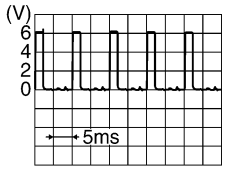 SKIA5291E
3	SB	Combination switch input 4	Input	ON	Lighting, turn, wiper OFF Wiper dial position 4	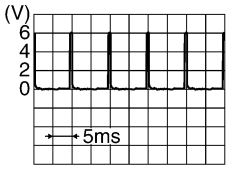 SKIA5292E
4	V	Combination switch input 3	Input	ON	Lighting, turn, wiper OFF Wiper dial position 4	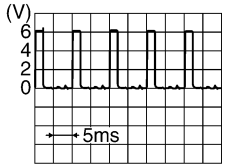 SKIA5291E
5	L	Combination switch input 2	Input	ON	Lighting, turn, wiper OFF Wiper dial position 4	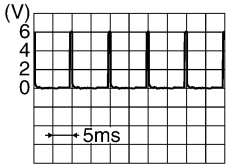 SKIA5292E
6	R	Combination switch input 1				
9	Y	Rear window defogger switch	Input	ON	Rear window defogger switch ON	0V
					Rear window defogger switch OFF	5V
11	G/B	Ignition switch (ACC or ON)	Input	ACC or ON	Ignition switch ACC or ON	Battery voltage
12	LG	Front door switch RH	Input	OFF	ON (open)	0V
					OFF (closed)	Battery voltage
13	L	Rear door switch RH	Input	OFF	ON (open)	0V
					OFF (closed)	Battery voltage
15	W	Tire pressure warning check connector	Input	OFF	—	5V
18	BR	Remote keyless entry receiver and optical sensor (ground)	Output	OFF	—	0V

Terminal	Wire color	Signal name	Signal input/ output	Measuring condition		Reference value or waveform (Approx.)
				Ignition switch	Operation or condition	
19	V	Remote keyless entry receiver (power supply)	Output	OFF	Ignition switch OFF	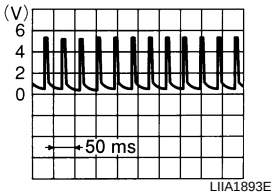
20	G	Remote keyless entry receiver (signal)	Input	OFF	Stand-by (keyfob buttons released)	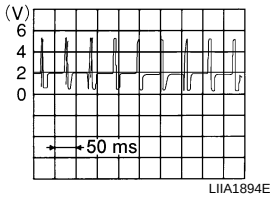
					When remote keyless entry receiver receives signal from keyfob (keyfob buttons pressed)	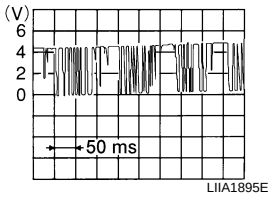
21	GR	NATS antenna amp.	Input	OFF → ON	Ignition switch (OFF → ON)	Just after turning ignition switch ON: Pointer of tester should move for approx. 1 second, then return to battery voltage.
22	V	BUS	—	—	Ignition switch ON or power window timer operates	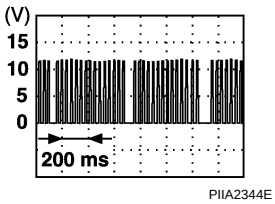
23	G	Security indicator lamp	Output	OFF	Goes OFF → illuminates (Every 2.4 seconds)	Battery voltage → 0V
25	BR	NATS antenna amp.	Input	OFF → ON	Ignition switch (OFF → ON)	Just after turning ignition switch ON: Pointer of tester should move for approx. 1 second, then return to battery voltage.
27	W	Compressor ON signal	Input	ON	A/C switch OFF	5V
					A/C switch ON	0V
28	LG	Front blower monitor	Input	ON	Front blower motor OFF	Battery voltage
					Front blower motor ON	0V
29	G	Hazard switch	Input	OFF	ON	0V
					OFF	5V
30[1]	G	Back door opener switch	Input	OFF	ON (open)	0V
					OFF (closed)	Battery voltage
30[2]	SB	Back door opener switch	Input	OFF	ON (open)	0V
					OFF (closed)	Battery voltage

Terminal	Wire color	Signal name	Signal input/ output	Measuring condition		Reference value or waveform (Approx.)
				Ignition switch	Operation or condition	
32	O	Combination switch output 5	Output	ON	Lighting, turn, wiper OFF Wiper dial position 4	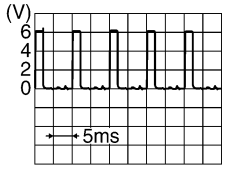 SKIA5291E
33	GR	Combination switch output 4	Output	ON	Lighting, turn, wiper OFF Wiper dial position 4	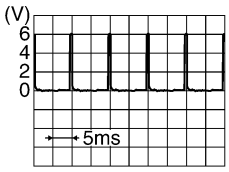 SKIA5292E
34	G	Combination switch output 3	Output	ON	Lighting, turn, wiper OFF Wiper dial position 4	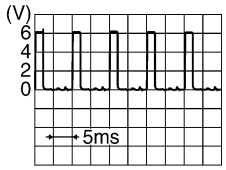 SKIA5291E
35	BR	Combination switch output 2	Output	ON	Lighting, turn, wiper OFF Wiper dial position 4	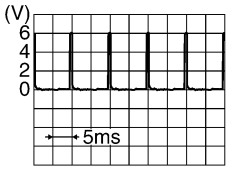 SKIA5292E
36	LG	Combination switch output 1				
37[1]	B	Key switch and key lock solenoid	Input	OFF	Key inserted	Battery voltage
					Key inserted	0V
37[2]	B	Key switch and ignition knob switch	Input	OFF	Intelligent Key inserted	Battery voltage
					Intelligent Key inserted	0V
38	W/R	Ignition switch (ON)	Input	ON	—	Battery voltage
39	L	CAN-H	—	—	—	—
40	P	CAN-L	—	—	—	—
42	LG	Glass hatch ajar switch	Input	ON	Glass hatch open	0
					Glass hatch closed	Battery
43	P	Back door latch switch	Input	OFF	ON (open)	0V
					OFF (closed)	Battery voltage

Terminal	Wire color	Signal name	Signal input/ output	Measuring condition		Reference value or waveform (Approx.)
				Ignition switch	Operation or condition	
44	O	Rear wiper auto stop switch	Input	ON	Rise up position (rear wiper arm on stopper)	0V
					A Position (full clockwise stop position)	Battery voltage
					Forward sweep (counterclockwise direction)	Fluctuating
					B Position (full counterclockwise stop position)	0V
					Reverse sweep (clockwise direction)	Fluctuating
47	GR	Front door switch LH	Input	OFF	ON (open)	0V
					OFF (closed)	Battery voltage
48	P	Rear door switch LH	Input	OFF	ON (open)	0V
					OFF (closed)	Battery voltage
49	L	Cargo lamp	Output	OFF	Any door open (ON)	0V
					All doors closed (OFF)	Battery voltage
51	G	Trailer turn signal (right)	Output	ON	Turn right ON	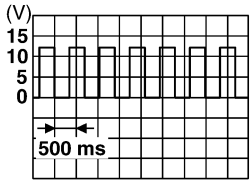 SKIA3009J
52	V	Trailer turn signal (left)	Output	ON	Turn left ON	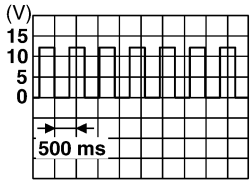 SKIA3009J
53	L	Back door latch actuator	Output	OFF	OFF	0
					ON	Battery voltage
55	W	Rear wiper output circuit 1	Output	ON	OFF	0
					ON	Battery voltage
56	V	Battery saver output	Output	OFF	30 minutes after ignition switch is turned OFF	0V
				ON	—	Battery voltage
57	R/Y	Battery power supply	Input	OFF	—	Battery voltage
58	W	Optical sensor	Input	ON	When optical sensor is illuminated	3.1V or more
					When optical sensor is not illuminated	0.6V or less
59	GR	Front door lock assembly LH actuator (unlock)	Output	OFF	OFF (neutral)	0V
					ON (unlock)	Battery voltage

Terminal	Wire color	Signal name	Signal input/ output	Measuring condition			Reference value or waveform (Approx.)
				Ignition switch	Operation or condition		
60	LG	Turn signal (left)	Output	ON	Turn left ON		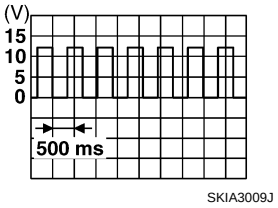
61	G	Turn signal (right)	Output	ON	Turn right ON		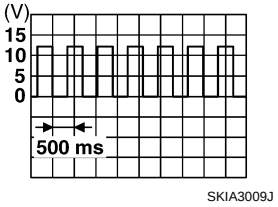
63	BR	Interior room/map lamp	Output	OFF	Any door switch	ON (open)	0V
						OFF (closed)	Battery voltage
65	V	All door lock actuators (lock)	Output	OFF	OFF (neutral)		0V
					ON (lock)		Battery voltage
66	L	Front door lock actuator RH, rear door lock actuators LH/RH and glass hatch lock actuator (unlock)	Output	OFF	OFF (neutral)		0V
					ON (unlock)		Battery voltage
67	B	Ground	Input	ON	—		0V
68	O	Power window power supply (RAP)	Output	—	Ignition switch ON		Battery voltage
					Within 45 seconds after ignition switch OFF		Battery voltage
					More than 45 seconds after ignition switch OFF		0V
					When front door LH or RH is open or power window timer operates		0V
69	L	Power window power supply	Output	—	—		Battery voltage
70	W	Battery power supply	Input	OFF	—		Battery voltage

1: With remote keyless entry system

2: With Intelligent Key system

Wiring Diagram

INFOID:0000000004409577

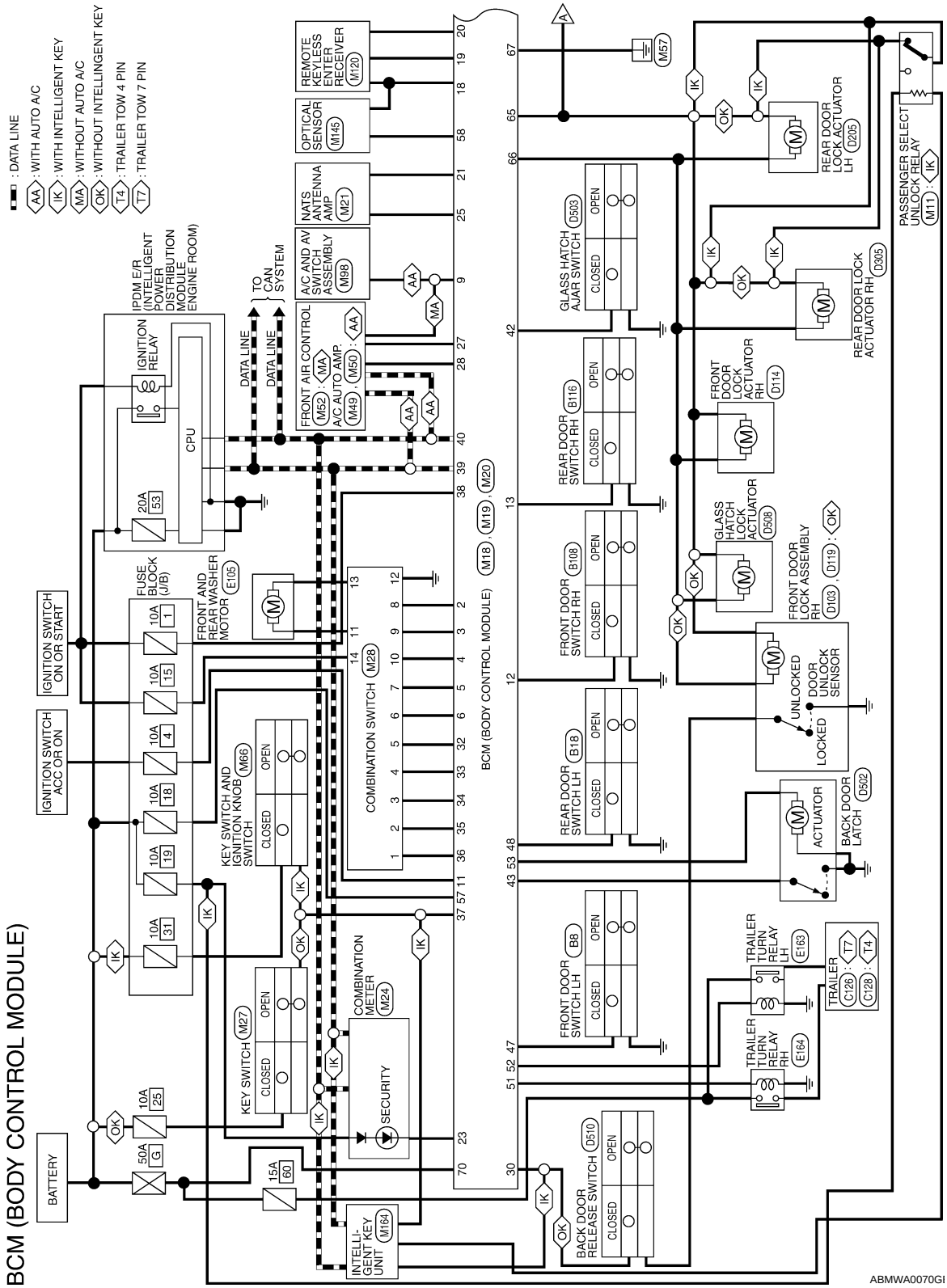

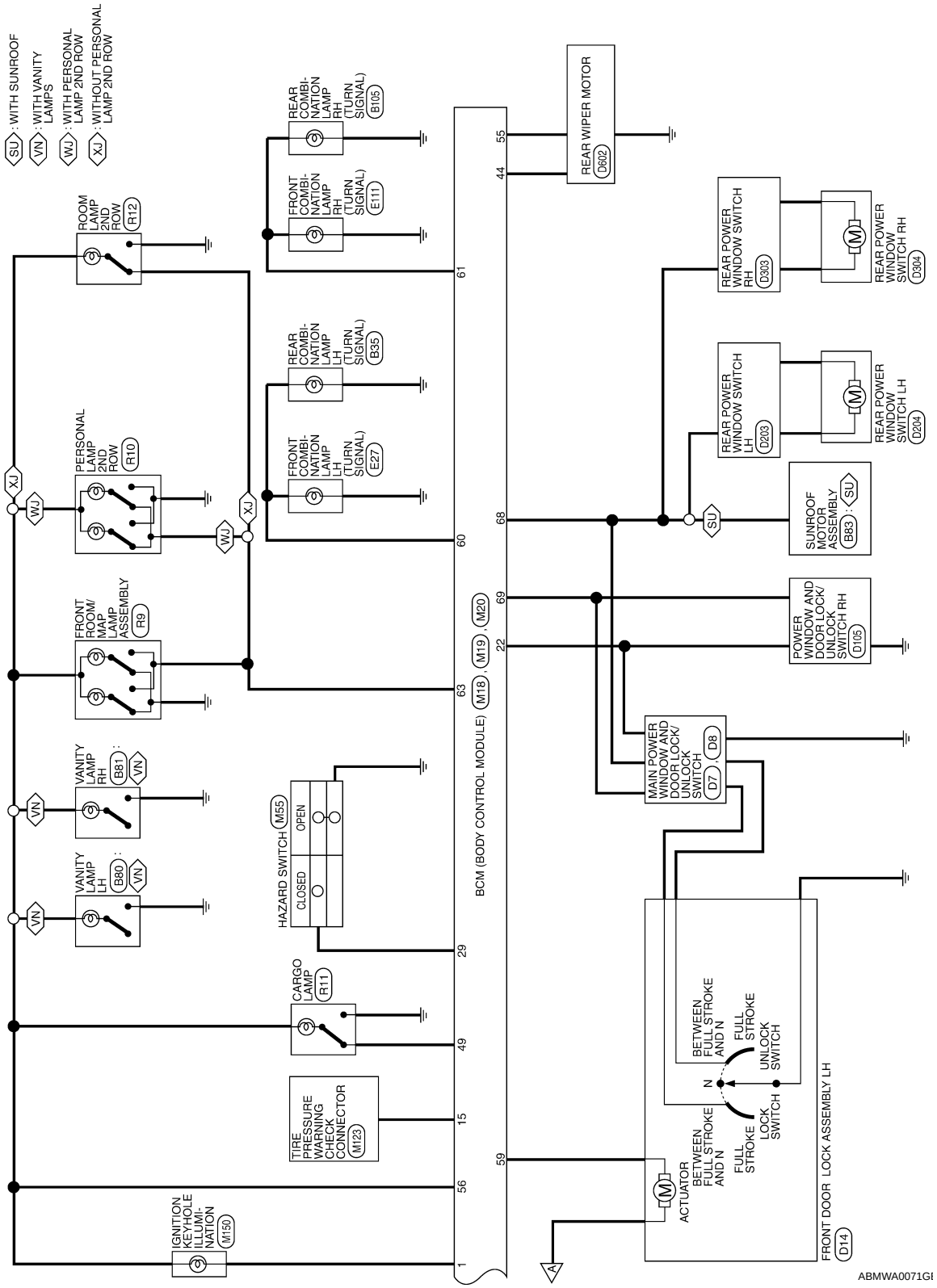
SU : WITH SUNROOF
VN : WITH VANITY LAMPS
WJ : WITH PERSONAL LAMP 2ND ROW
XJ : WITHOUT PERSONAL LAMP 2ND ROW
ROOM LAMP 2ND ROW R12
PERSONAL LAMP 2ND ROW R10
FRONT ROOM/ MAP LAMP ASSEMBLY R9
VANITY LAMP RH B81 : VN
VANITY LAMP LH B80 : VN
CARGO LAMP R11
TIRE PRESSURE WARNING CHECK CONNECTOR M123
IGNITION KEYHOLE ILLUMI-NATION M150
HAZARD SWITCH M55
CLOSED
OPEN
REAR COMBI-NATION LAMP RH (TURN SIGNAL) B105
FRONT COMBI-NATION LAMP RH (TURN SIGNAL) E111
REAR COMBI-NATION LAMP LH (TURN SIGNAL) B35
FRONT COMBI-NATION LAMP LH (TURN SIGNAL) E27
BCM (BODY CONTROL MODULE) (M18), (M19), (M20)
REAR WIPER MOTOR D602
REAR POWER WINDOW SWITCH RH D303
REAR POWER WINDOW SWITCH RH D304
REAR POWER WINDOW SWITCH LH D203
REAR POWER WINDOW SWITCH LH D204
SUNROOF MOTOR ASSEMBLY B83 : SU
POWER WINDOW AND DOOR LOCK/ UNLOCK SWITCH RH D105
MAIN POWER WINDOW AND DOOR LOCK/ UNLOCK SWITCH (D7), (D8)
ACTUATOR
BETWEEN FULL STROKE AND N
FULL STROKE
LOCK SWITCH
UNLOCK SWITCH
N
FRONT DOOR LOCK ASSEMBLY LH D14
A
ABMWA0071GI

BCM (BODY CONTROL MODULE) CONNECTORS

Connector No.	M18
Connector Name	BCM (BODY CONTROL MODULE)
Connector Color	WHITE

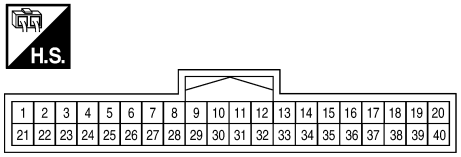

Terminal No.	Color of Wire	Signal Name
1	BR	KEY RING OUTPUT
2	P	INPUT 5
3	SB	INPUT 4
4	V	INPUT 3
5	L	INPUT 2
6	R	INPUT 1
7	–	–
8	–	–
9	Y	REAR DEFOGGER SW
10	–	–
11	G/B	ACC SW
12	LG	DOOR SW (AS)
13	L	DOOR SW (RR)
14	–	–
15	W	TPMS MODE TRIGGER SW
16	–	–
17	–	–
18	BR	KEYLESS AND AUTOLIGHT SENSOR GND
19	V	KEYLESS TUNER POWER SUPPLY OUTPUT
20	G	KEYLESS TUNER SIGNAL
21	GR	IMMOBILIZER ANTENNA SIG (CLOCK)
22	V	ANTI-PINCH SERIAL LINK (RX,TX)
23	G	SECURITY INDICATOR OUTPUT
25	BR	IMMOBILIZER ANTENNA SIGNAL (TX,RX)
26	–	–
27	W	AIRCON SW
28	LG	BLOWER FAN SW
29	G	HAZARD SW
30	SB	BACK DOOR AUTO CLOSURE (WITH INTELLIGENT KEY SYSTEM)
30	G	LIFTGATE OPENER SW (WITHOUT INTELLIGENT KEY SYSTEM)
31	–	–
32	O	OUTPUT 5
33	GR	OUTPUT 4
34	G	OUTPUT 3
35	BR	OUTPUT 2
36	LG	OUTPUT 1
37	B	KEY SW
38	W/R	IGN SW
39	L	CAN-H
40	P	CAN-L

Connector No.	M19
Connector Name	BCM (BODY CONTROL MODULE)
Connector Color	WHITE

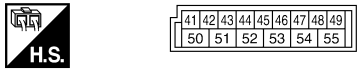

Terminal No.	Color of Wire	Signal Name
41	–	–
42	LG	GLASS HATCH SW
43	P	BACK DOOR SW
44	O	REAR WIPE AUTO STOP SW1
45	–	–
46	–	–
47	GR	DOOR SW (DR)
48	P	DOOR SW (RL)
49	L	LUGGAGE LAMP OUTPUT
50	–	–
51	G	TRAILER FLASHER OUTPUT (RIGHT)
52	V	TRAILER FLASHER OUTPUT (LEFT)
53	L	LIFT GATE OPENER OUTPUT
54	–	–
55	W	REAR WIPE MOTOR OUTPUT1

ABMIA0161GB

Connector No.	M20
Connector Name	BCM (BODY CONTROL MODULE)
Connector Color	BLACK

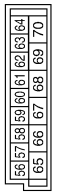

Terminal No.	Color of Wire	Signal Name
56	V	BAT SAVER OUTPUT
57	R/Y	BAT (FUSE)
58	W	AUTO LIGHT SENSOR INPUT 2
59	GR	DOOR UNLOCK OUTPUT (DR)
60	LG	FLASHER OUTPUT (LEFT)

Terminal No.	Color of Wire	Signal Name
61	G	FLASHER OUTPUT (RIGHT)
62	–	–
63	BR	ROOM LAMP
64	–	–
65	V	DOOR LOCK OUTPUT (ALL)
66	L	DOOR UNLOCK OUTPUT (OTHER)
67	B	GND (POWER)
68	O	POWER WINDOW POWER SUPPLY OUTPUT (LINKED TO RAP)
69	L	POWER WINDOW POWER SUPPLY OUTPUT (BAT)
70	W	BAT (F/L)

Connector No.	M28
Connector Name	COMBINATION SWITCH
Connector Color	WHITE

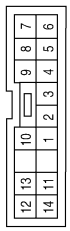

Terminal No.	Color of Wire	Signal Name
1	LG	INPUT 1
2	BR	INPUT 2
3	G	INPUT 3
4	GR	INPUT 4
5	O	INPUT 5
6	R	OUTPUT 1
7	L	OUTPUT 2
8	P	OUTPUT 5
9	SB	OUTPUT 4
10	V	OUTPUT 3
11	O	WASHER MOTOR (RR+)
12	B	GND
13	L	WASHER MOTOR (RR-)
14	W/G	IGN

ABMIA0162GB

DTC Inspection Priority Chart

INFOID:0000000004409578

If some DTCs are displayed at the same time, perform inspections one by one based on the following priority chart.

Priority	DTC
1	• U1000: CAN COMM CIRCUIT • U1010: CONTROL UNIT (CAN)
2	• B2190: NATS ANTENNA AMP • B2191: DIFFERENCE OF KEY • B2192: ID DISCORD BCM-ECM • B2193: CHAIN OF BCM-ECM • B2013: STRG COMM 1 • B2552: INTELLIGENT KEY • B2590: NATS MALFUNCTION
3	• C1729: VHCL SPEED SIG ERR • C1735: IGNITION SIGNAL
4	• C1704: LOW PRESSURE FL • C1705: LOW PRESSURE FR • C1706: LOW PRESSURE RR • C1707: LOW PRESSURE RL • C1708: [NO DATA] FL • C1709: [NO DATA] FR • C1710: [NO DATA] RR • C1711: [NO DATA] RL • C1712: [CHECKSUM ERR] FL • C1713: [CHECKSUM ERR] FR • C1714: [CHECKSUM ERR] RR • C1715: [CHECKSUM ERR] RL • C1716: [PRESSDATA ERR] FL • C1717: [PRESSDATA ERR] FR • C1718: [PRESSDATA ERR] RR • C1719: [PRESSDATA ERR] RL • C1720: [CODE ERR] FL • C1721: [CODE ERR] FR • C1722: [CODE ERR] RR • C1723: [CODE ERR] RL • C1724: [BATT VOLT LOW] FL • C1725: [BATT VOLT LOW] FR • C1726: [BATT VOLT LOW] RR • C1727: [BATT VOLT LOW] RL

DTC Index

INFOID:0000000004409579

NOTE:

Details of time display

- CRNT: Displays when there is a malfunction now or after returning to the normal condition until turning ignition switch OFF → ON again.
- 1 - 39: Displayed if any previous malfunction is present when current condition is normal. It increases like 1 → 2 → 3...38 → 39 after returning to the normal condition whenever ignition switch OFF → ON. The counter remains at 39 even if the number of cycles exceeds it. It is counted from 1 again when turning ignition switch OFF → ON after returning to the normal condition if the malfunction is detected again.

CONSULT display	Fail-safe	Intelligent Key warning lamp ON	Tire pressure monitor warning lamp ON	Reference page
No DTC is detected. further testing may be required.	—	—	—	—
U1000: CAN COMM CIRCUIT	—	—	—	BCS-33
U1010: CONTROL UNIT (CAN)	—	—	—	BCS-34
B2013: STRG COMM 1	—	—	—	SEC-27
B2190: NATS ANTTENA AMP	—	—	—	SEC-30 (with I-Key), SEC-136 (without I-Key)

CONSULT display	Fail-safe	Intelligent Key warning lamp ON	Tire pressure monitor warning lamp ON	Reference page
B2191: DIFFERENCE OF KEY	—	—	—	SEC-33 (with I-Key), SEC-139 (without I-Key)
B2192: ID DISCORD BCM-ECM	—	—	—	SEC-34 (with I-Key), SEC-140 (without I-Key)
B2193: CHAIN OF BCM-ECM	—	—	—	SEC-36 (with I-Key), SEC-142 (without I-Key)
B2552: INTELLIGENT KEY	—	—	—	SEC-38
B2590: NATS MALFUNCTION	—	—	—	SEC-39
C1708: [NO DATA] FL	—	—	—	WT-14
C1709: [NO DATA] FR	—	—	—	WT-14
C1710: [NO DATA] RR	—	—	—	WT-14
C1711: [NO DATA] RL	—	—	—	WT-14
C1712: [CHECKSUM ERR] FL	—	—	—	WT-16
C1713: [CHECKSUM ERR] FR	—	—	—	WT-16
C1714: [CHECKSUM ERR] RR	—	—	—	WT-16
C1715: [CHECKSUM ERR] RL	—	—	—	WT-16
C1716: [PRESSDATA ERR] FL	—	—	—	WT-18
C1717: [PRESSDATA ERR] FR	—	—	—	WT-18
C1718: [PRESSDATA ERR] RR	—	—	—	WT-18
C1719: [PRESSDATA ERR] RL	—	—	—	WT-18
C1720: [CODE ERR] FL	—	—	—	WT-16
C1721: [CODE ERR] FR	—	—	—	WT-16
C1722: [CODE ERR] RR	—	—	—	WT-16
C1723: [CODE ERR] RL	—	—	—	WT-16
C1724: [BATT VOLT LOW] FL	—	—	—	WT-16
C1725: [BATT VOLT LOW] FR	—	—	—	WT-16
C1726: [BATT VOLT LOW] RR	—	—	—	WT-16
C1727: [BATT VOLT LOW] RL	—	—	—	WT-16
C1729: VHCL SPEED SIG ERR	—	—	—	WT-19
C1735: IGNITION SWITCH	—	—	—	—

IPDM E/R (INTELLIGENT POWER DISTRIBUTION MODULE ENGINE ROOM)

Reference Value

INFOID:0000000004409580

VALUES ON THE DIAGNOSIS TOOL

Monitor Item	Condition		Value/Status
MOTOR FAN REQ	Engine idle speed	Changes depending on engine coolant temperature, air conditioner operation status, vehicle speed, etc.	0 - 100 %
A/C COMP REQ	A/C switch OFF		OFF
	A/C switch ON		ON
TAIL&CLR REQ	Lighting switch OFF		OFF
	Lighting switch 1ST, 2ND, HI or AUTO (Light is illuminated)		ON
HL LO REQ	Lighting switch OFF		OFF
	Lighting switch 2ND HI or AUTO (Light is illuminated)		ON
HL HI REQ	Lighting switch OFF		OFF
	Lighting switch HI		ON
FR FOG REQ	Lighting switch 2ND or AUTO (Light is illuminated)	Front fog lamp switch OFF	OFF
		• Front fog lamp switch ON • Daytime light activated (Canada only)	ON
H L WASHER REQ	**NOTE:** This item is displayed, but cannot be monitored.		OFF
FR WIP REQ	Ignition switch ON	Front wiper switch OFF	STOP
		Front wiper switch INT	1LOW
		Front wiper switch LO	LOW
		Front wiper switch HI	HI
WIP AUTO STOP	Ignition switch ON	Front wiper stop position	STOP P
		Any position other than front wiper stop position	ACT P
WIP PROT	Ignition switch ON	Front wiper operates normally	OFF
		Front wiper stops at fail-safe operation	BLOCK
ST RLY REQ	Ignition switch OFF or ACC		OFF
	Ignition switch START		ON
IGN RLY	Ignition switch OFF or ACC		OFF
	Ignition switch ON		ON
RR DEF REQ	Rear defogger switch OFF		OFF
	Rear defogger switch ON		ON
OIL P SW	Ignition switch OFF, ACC or engine running		OPEN
	Ignition switch ON		CLOSE
DTRL REQ	**NOTE:** This item is displayed, but cannot be monitored.		OFF
HOOD SW	**NOTE:** This item is displayed, but cannot be monitored.		OFF

Monitor Item	Condition	Value/Status
THFT HRN REQ	Not operated	OFF
	• Panic alarm is activated • Horn is activated with VEHICLE SECURITY (THEFT WARNING) SYSTEM	ON
HORN CHIRP	Not operated	OFF
	Door locking with keyfob or Intelligent Key (if equipped) (horn chirp mode)	ON

Terminal Layout

INFOID:0000000004409581

TERMINAL LAYOUT

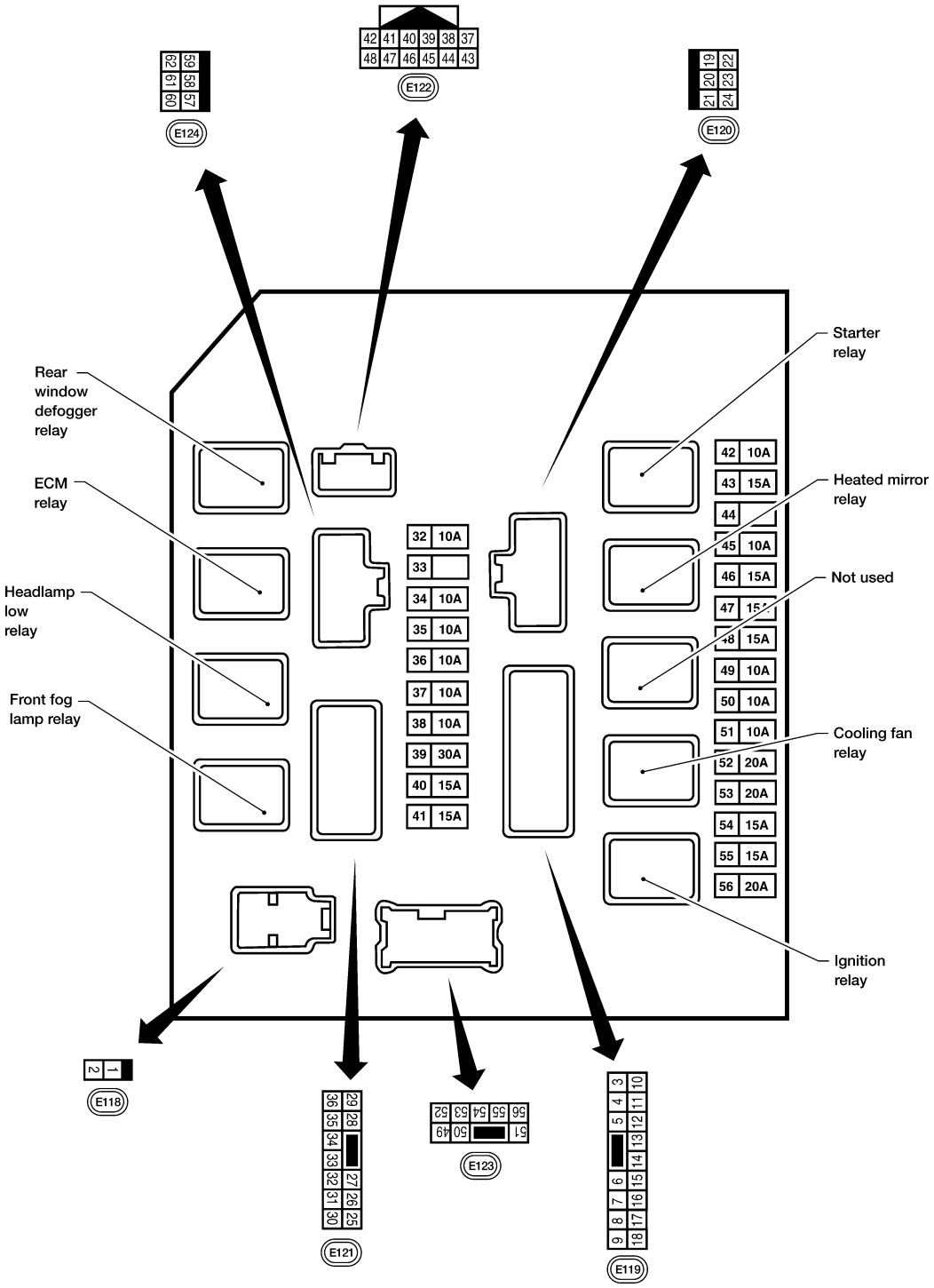

WKIA5852E

Physical Values

INFOID:0000000004409582

PHYSICAL VALUES

Terminal	Wire color	Signal name	Signal input/ output	Measuring condition		Reference value (Approx.)
				Igni-tion switch	Operation or condition	
1	W	Battery power supply	Input	OFF	—	Battery voltage
2	R	Battery power supply	Input	OFF	—	Battery voltage
3	G	ECM relay	Output	—	Ignition switch ON or START	Battery voltage
					Ignition switch OFF or ACC	0V
4	P	ECM relay	Output	—	Ignition switch ON or START	Battery voltage
					Ignition switch OFF or ACC	0V
6	V	Throttle control motor relay	Output	—	Ignition switch ON or START	Battery voltage
					Ignition switch OFF or ACC	0V
7	BR	ECM relay control	Input	—	Ignition switch ON or START	0V
					Ignition switch OFF or ACC	Battery voltage
8	W/R	Fuse 54	Output	—	Ignition switch ON or START	Battery voltage
					Ignition switch OFF or ACC	0V
10	R/B	Fuse 45	Output	ON	Daytime light system active	0V
					Daytime light system inactive	Battery voltage
11	Y	A/C compressor	Output	ON or START	A/C switch ON or defrost A/C switch	Battery voltage
					A/C switch OFF or defrost A/C switch	0V
12	W/G	Ignition switch sup-plied power	Input	—	OFF or ACC	0V
					ON or START	Battery voltage
13	R	Fuel pump relay	Output	—	Ignition switch ON or START	Battery voltage
					Ignition switch OFF or ACC	0V
14	W/G	Fuse 49	Output	—	Ignition switch ON or START	Battery voltage
					Ignition switch OFF or ACC	0V
15	W/R	Fuse 50 (VDC)	Output	—	Ignition switch ON or START	Battery voltage
					Ignition switch OFF or ACC	0V
15	W/R	Fuse 50 (ABS)	Output	—	Ignition switch ON or START	Battery voltage
					Ignition switch OFF or ACC	0V
16	W/G	Fuse 51	Output	—	Ignition switch ON or START	Battery voltage
					Ignition switch OFF or ACC	0V
17	W/G	Fuse 55	Output	—	Ignition switch ON or START	Battery voltage
					Ignition switch OFF or ACC	0V
19	W	Starter motor	Output	START	—	Battery voltage
20	BR	Cooling fan motor (low)	Output	ON or START	—	Battery voltage
21	GR	Ignition switch sup-plied power	Input	—	OFF or ACC	0V
					START	Battery voltage
22	G	Battery power supply	Output	OFF	—	Battery voltage
23	LG	Door mirror defogger output signal	Output	—	When rear defogger switch is ON	Battery voltage
					When raker defogger switch is OFF	0V

Terminal	Wire color	Signal name	Signal input/ output	Measuring condition			Reference value (Approx.)
				Igni-tion switch	Operation or condition		
24	P	Cooling fan motor (high)	Output	—	Conditions correct for cooling fan operation		Battery voltage
					Conditions not correct for cooling fan operation		0V
27	W	Fuse 38	Output	—	Ignition switch ON or START		Battery voltage
					Ignition switch OFF or ACC		0V
28	R	LH front parking and front side marker lamp	Output	OFF	Lighting switch 1st position	OFF	0V
						ON	Battery voltage
29	G	Trailer tow relay	Output	ON	Lighting switch 1st position	OFF	0V
						ON	Battery voltage
30	R/B	Fuse 53	Output	—	Ignition switch ON or START		Battery voltage
					Ignition switch OFF or ACC		0V
32	GR	Wiper low speed signal	Output	ON or START	Wiper switch	OFF	Battery voltage
						LO or INT	0V
35	L	Wiper high speed signal	Output	ON or START	Wiper switch	OFF, LO, INT	Battery voltage
						HI	0V
37	Y	Power generation command signal	Output	—	Ignition switch ON		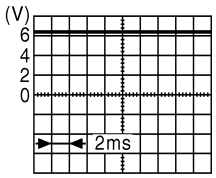 JPMIA0001GB 6.3 V
					40% is set on "Active test," "ALTERNATOR DUTY" of "ENGINE"		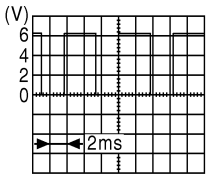 JPMIA0002GB 3.8 V
					40% is set on "Active test," "ALTERNATOR DUTY" of "ENGINE"		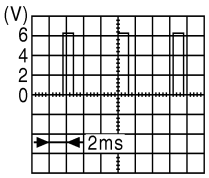 JPMIA0003GB 1.4 V
38	B	Ground	Input	—	—		0V
39	L	CAN-H	—	ON	—		—
40	P	CAN-L	—	ON	—		—
42	GR	Oil pressure switch	Input	—	Engine running		Battery voltage
					Engine stopped		0V

Terminal	Wire color	Signal name	Signal input/ output	Measuring condition			Reference value (Approx.)
				Igni-tion switch	Operation or condition		
43	G	Wiper auto stop signal	Input	ON or START	Wiper switch	OFF, LO, INT	Battery voltage
44	R	Daytime light relay control	Input	ON	Daytime light system active		0V
					Daytime light system inactive		Battery voltage
45	LG	Horn relay control	Input	ON	When door locks are operated using keyfob or Intelligent Key (if equipped) (OFF → ON)*		Battery voltage → 0V
46	V	Fuel pump relay con-trol	Input	—	Ignition switch ON or START		0V
					Ignition switch OFF or ACC		Battery voltage
47	O	Throttle control motor relay control	Input	—	Ignition switch ON or START		0V
					Ignition switch OFF or ACC		Battery voltage
48	R	Starter relay (inhibit switch)	Input	ON or START	Selector lever in "P" or "N"		0V
					Selector lever any other posi-tion		Battery voltage
49	GR	Front RH parking and front side marker lamp	Output	OFF	Lighting switch 1st po-sition	OFF	0V
						ON	Battery voltage
50	W	Front fog lamp (LH)	Output	ON or START	Lighting switch must be in the 2nd position (LOW beam is ON) and the front fog lamp switch	OFF	0V
						ON	Battery voltage
51	V	Front fog lamp (RH)	Output	ON or START	Lighting switch must be in the 2nd position (LOW beam is ON) and the front fog lamp switch	OFF	0V
						ON	Battery voltage
52	P	LH low beam head-lamp	Output	—	Lighting switch in 2nd position		Battery voltage
54	R	RH low beam head-lamp	Output	—	Lighting switch in 2nd position		Battery voltage
55	G	LH high beam head-lamp	Output	—	Lighting switch in 2nd position and placed in HIGH or PASS position		Battery voltage
56	L	RH high beam head-lamp	Output	—	Lighting switch in 2nd position and placed in HIGH or PASS position		Battery voltage
57	GR	Parking, license, and tail lamp	Output	ON	Lighting switch 1st po-sition	OFF	0V
						ON	Battery voltage
59	B	Ground	Input	—	—		0V
60	GR	Rear window defog-ger relay	Output	ON or START	Rear defogger switch ON		Battery voltage
					Rear defogger switch OFF		0V
61	R/B	Fuse 32	Output	OFF	—		Battery voltage

*: When horn reminder is ON

Wiring Diagram

INFOID:0000000004409583

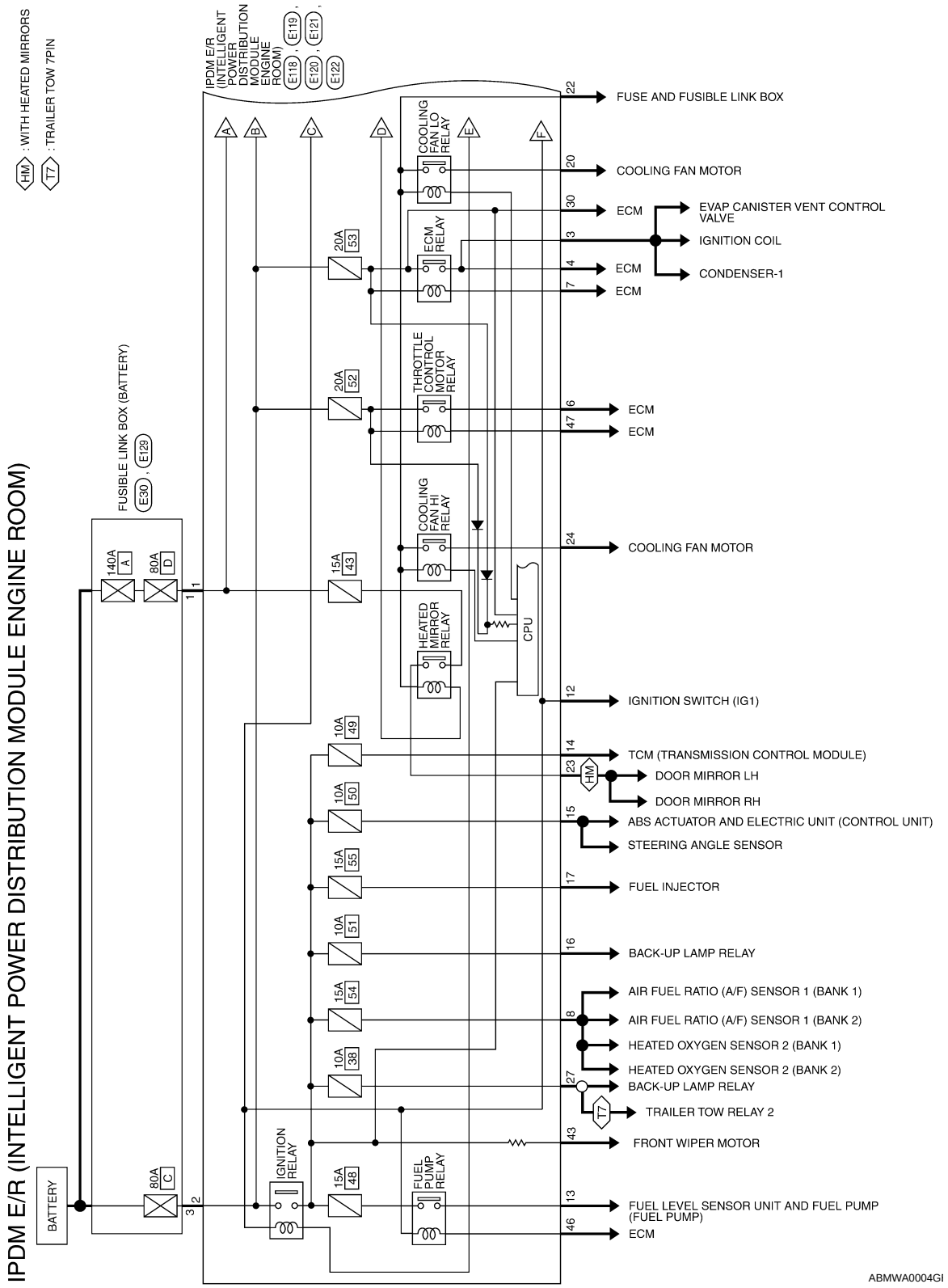

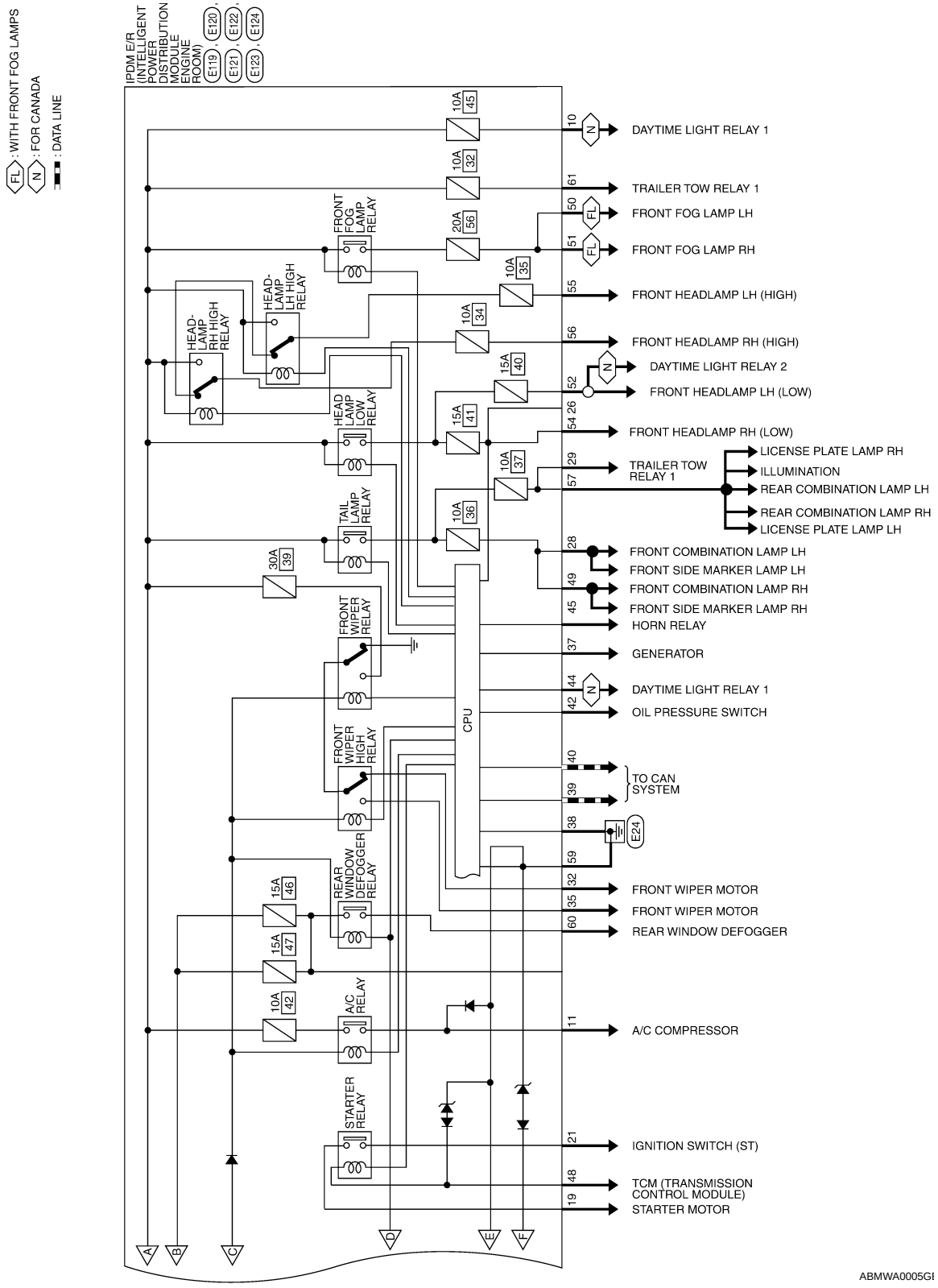
FL : WITH FRONT FOG LAMPS
N : FOR CANADA
: DATA LINE
IPDM E/R (INTELLIGENT POWER DISTRIBUTION MODULE ENGINE ROOM)
E119, E120, E121, E122, E123, E124
10A 45
10A 32
20A 56
10A 35
10A 34
15A 40
15A 41
10A 37
10A 36
30A 39
15A 46
15A 47
10A 42
FRONT FOG LAMP RELAY
HEAD-LAMP LH HIGH RELAY
HEAD-LAMP RH HIGH RELAY
HEAD LAMP LOW RELAY
TAIL LAMP RELAY
FRONT WIPER RELAY
FRONT WIPER HIGH RELAY
REAR WINDOW DEFOGGER RELAY
A/C RELAY
STARTER RELAY
CPU
10 DAYTIME LIGHT RELAY 1
61 TRAILER TOW RELAY 1
50 FRONT FOG LAMP LH
51 FRONT FOG LAMP RH
55 FRONT HEADLAMP LH (HIGH)
56 FRONT HEADLAMP RH (HIGH)
52 DAYTIME LIGHT RELAY 2
FRONT HEADLAMP LH (LOW)
54 26 FRONT HEADLAMP RH (LOW)
29 57 TRAILER TOW RELAY 1
LICENSE PLATE LAMP RH
ILLUMINATION
REAR COMBINATION LAMP LH
REAR COMBINATION LAMP RH
LICENSE PLATE LAMP LH
28 FRONT COMBINATION LAMP LH
FRONT SIDE MARKER LAMP LH
49 FRONT COMBINATION LAMP RH
45 FRONT SIDE MARKER LAMP RH
HORN RELAY
37 GENERATOR
44 DAYTIME LIGHT RELAY 1
42 OIL PRESSURE SWITCH
40 39 TO CAN SYSTEM
38 E24
59
32 FRONT WIPER MOTOR
35 FRONT WIPER MOTOR
60 REAR WINDOW DEFOGGER
11 A/C COMPRESSOR
21 IGNITION SWITCH (ST)
48 TCM (TRANSMISSION CONTROL MODULE)
19 STARTER MOTOR
A
B
C
D
E
F
ABMWA0005GI

IPDM E/R (INTELLIGENT POWER DISTRIBUTION MODULE ENGINE ROOM) CONNECTORS

Connector No.	E30
Connector Name	FUSIBLE LINK BOX (BATTERY)
Connector Color	–

Terminal No.	Color of Wire	Signal Name
3	R	–

Connector No.	E118
Connector Name	IPDM E/R (INTELLIGENT POWER DISTRIBUTION MODULE ENGINE ROOM)
Connector Color	BLACK

Terminal No.	Color of Wire	Signal Name
1	W	F/LUSM
2	R	F/LMAIN

Connector No.	E119
Connector Name	IPDM E/R (INTELLIGENT POWER DISTRIBUTION MODULE ENGINE ROOM)
Connector Color	WHITE

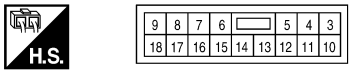

Terminal No.	Color of Wire	Signal Name
3	G	IGN_COIL
4	P	ENG_SUPPLY
5	–	–
6	V	ELEC_THROTTLE
7	BR	ECM_RLY_CONT
8	W/R	O2_SENS
9	–	–
10	R/B	DTRL_RLY_SUPPLY
11	Y	A/C_COMPRESSOR
12	W/G	IGN_SW_(IG1)
13	R	FUEL_PUMP
14	W/G	A/T_ECU_IGN_SUPPLY
15	W/R	ABS_IGN_SUPPLY
16	W/G	REVERS_LAMP
17	W/G	INJECTION
18	–	–

Connector No.	E120
Connector Name	IPDM E/R (INTELLIGENT POWER DISTRIBUTION MODULE ENGINE ROOM)
Connector Color	WHITE

Terminal No.	Color of Wire	Signal Name
19	W	STARTER_MOTOR
20	BR	M/FAN_1
21	GR	IGN_SW_(ST)
22	G	MOTOR FAN
23	LG	HEATED MIRROR
24	P	M/FAN_2

ABMIA0008GB

Connector No.	E121
Connector Name	IPDM E/R (INTELLIGENT POWER DISTRIBUTION MODULE ENGINE ROOM)
Connector Color	BROWN

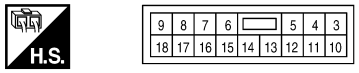

Terminal No.	Color of Wire	Signal Name
25	–	–
26	–	–
27	W	T_TOW_REV_LAMP
28	R	CLEARANCE_ FRONT_LH
29	G	TRAILER_RLY_CONT

Terminal No.	Color of Wire	Signal Name
31	–	–
32	GR	FR_WIPER_LO
33	–	–
34	–	–
35	L	FR_WIPER_HI
36	–	–

Connector No.	E122
Connector Name	IPDM E/R (INTELLIGENT POWER DISTRIBUTION MODULE ENGINE ROOM)
Connector Color	WHITE

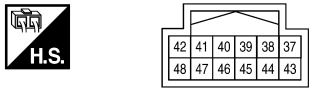

Terminal No.	Color of Wire	Signal Name
37	Y	ALT-C

Terminal No.	Color of Wire	Signal Name
38	B	GND (SIGNAL)
39	L	CAN-H
40	P	CAN-L
41	—	—
42	GR	OIL PRESSURE SW
43	G	AUTO_STOP_SW
44	R	DTRL RLY CONT
45	LG	HORN RLY
46	V	ECM (FUEL_PUMP_ RLY_CONT)
47	O	ECM (ETC_RLY_CONT)
48	R	INHIBIT

Connector No.	E123
Connector Name	IPDM E/R (INTELLIGENT POWER DISTRIBUTION MODULE ENGINE ROOM)
Connector Color	BROWN

Terminal No.	Color of Wire	Signal Name
49	GR	CLEARANCE_ FRONT_RH
50	W	FR_FOG_LAMP_LH
51	V	FR_FOG_LAMP_RH
52	P	H/LAMP_LO_LH
53	—	—
54	R	H/LAMP_LO_RH
55	G	H/LAMP_HI_LH
56	L	H/LAMP_HI_RH

Connector No.	E124
Connector Name	IPDM E/R (INTELLIGENT POWER DISTRIBUTION MODULE ENGINE ROOM)
Connector Color	BLACK

Terminal No.	Color of Wire	Signal Name
57	GR	TAIL_LAMPS
58	—	—
59	B	GND (POWER)
60	GR	RR_DEF
61	R/B	TRAILER_RLY_SUPPLY
62	—	—

ABMIA0262GB

Connector No.	E129
Connector Name	PUSIBLE LINK BOX (BATTERY)
Connector Color	–

Terminal No.	Color of Wire	Signal Name
1	W	–

ABMIA0338GB

Fail Safe

INFOID:0000000004409584

CAN COMMUNICATION CONTROL

When CAN communication with ECM and BCM is impossible, IPDM E/R performs fail-safe control. After CAN communication recovers normally, it also returns to normal control.

If No CAN Communication Is Available With ECM

Control part	Fail-safe in operation
Cooling fan	• Turns ON the cooling fan relay when the ignition switch is turned ON • Turns OFF the cooling fan relay when the ignition switch is turned OFF

If No CAN Communication Is Available With BCM

Control part	Fail-safe in operation
Headlamp	• Turns ON the headlamp low relay when the ignition switch is turned ON • Turns OFF the headlamp low relay when the ignition switch is turned OFF • Headlamp high relay OFF
• Parking lamps • License plate lamps • Tail lamps	• Turns ON the tail lamp relay when the ignition switch is turned ON • Turns OFF the tail lamp relay when the ignition switch is turned OFF
Front wiper	• The status just before activation of fail-safe control is maintained until the ignition switch is turned OFF while the front wiper is operating at LO or HI speed. • The wiper is operated at LO speed until the ignition switch is turned OFF if the fail-safe control is activated while the front wiper is set in the INT mode and the front wiper motor is operating.
Rear window defogger	Rear window defogger relay OFF
A/C compressor	A/C relay OFF
Front fog lamps	Front fog lamp relay OFF

IGNITION RELAY MALFUNCTION DETECTION FUNCTION

- IPDM E/R monitors the voltage at the contact circuit and excitation coil circuit of the ignition relay inside it.
- IPDM E/R judges the ignition relay error if the voltage differs between the contact circuit and the excitation coil circuit.
- If the ignition relay cannot turn OFF due to contact seizure, it activates the tail lamp relay for 10 minutes to alert the user to the ignition relay malfunction when the ignition switch is turned OFF.

Ignition switch	Ignition relay	Tail lamp relay
ON	ON	—
OFF	OFF	—

NOTE:

The tail lamp turns OFF when the ignition switch is turned ON.

FRONT WIPER CONTROL

IPDM E/R detects front wiper stop position by a front wiper auto stop signal.
When a front wiper auto stop signal is in the conditions listed below, IPDM E/R stops power supply to wiper after repeating a front wiper 10 second activation and 20 second stop five times.

Ignition switch	Front wiper switch	Auto stop signal
ON	OFF	Front wiper stop position signal cannot be input 10 seconds.
	ON	The signal does not change for 10 seconds.

NOTE:

This operation status can be confirmed on the IPDM E/R “DATA MONITOR” that displays “Block” for the item “WIP PROT” while the wiper is stopped.

STARTER MOTOR PROTECTION FUNCTION

IPDM E/R turns OFF the starter control relay to protect the starter motor when the starter control relay remains active for 90 seconds.

DTC Index

INFOID:0000000004409585

CONSULT-III display	Fail-safe	TIME[NOTE]		Refer to
No DTC is detected. further testing may be required.	—	—	—	—
U1000: CAN COMM CIRCUIT	×	CRNT	1 – 39	PCS-17

NOTE:
The details of TIME display are as follows.
- CRNT: The malfunctions that are detected now
- 1 - 39: The number is indicated when it is normal at present and a malfunction was detected in the past. It increases like 0 → 1 → 2 ··· 38 → 39 after returning to the normal condition whenever IGN OFF → ON. It is fixed to 39 until the self-diagnosis results are erased if it is over 39. It returns to 0 when a malfunction is detected again in the process.

SYMPTOM DIAGNOSIS

WIPER AND WASHER SYSTEM SYMPTOMS

Symptom Table

INFOID:0000000003938670

CAUTION:
Perform the self-diagnosis with CONSULT-III before performing the diagnosis by symptom. Perform the diagnosis by DTC if DTC is detected.

Symptom		Probable malfunction location	Inspection item
Front wiper does not operate.	HI only	• Combination switch • Harness between combination switch and BCM • BCM	Combination switch Refer to BCS-56, "Symptom Table".
		• IPDM E/R • Harness between IPDM E/R and front wiper motor • Front wiper motor	Front wiper motor (HI) circuit Refer to WW-21, "Component Function Check".
		Front wiper request signal • BCM • IPDM E/R	IPDM E/R DATA MONITOR "FR WIP REQ"
	LO and INT	• Combination switch • Harness between combination switch and BCM • BCM	Combination switch Refer to BCS-56, "Symptom Table".
		• IPDM E/R • Harness between IPDM E/R and front wiper motor • Front wiper motor	Front wiper motor (LO) circuit Refer to WW-19, "Component Function Check".
		Front wiper request signal • BCM • IPDM E/R	IPDM E/R DATA MONITOR "FR WIP REQ"
	INT only	• Combination switch • Harness between combination switch and BCM • BCM	Combination switch Refer to BCS-56, "Symptom Table".
		Front wiper request signal • BCM • IPDM E/R	IPDM E/R DATA MONITOR "FR WIP REQ"
	HI, LO, and INT	SYMPTOM DIAGNOSIS “FRONT WIPER DOES NOT OPERATE” Refer to WW-75, "Diagnosis Procedure".	

Symptom		Probable malfunction location	Inspection item
Front wiper does not stop.	HI only	• Combination switch • BCM	Combination switch Refer to BCS-56, "Symptom Table".
		Front wiper request signal • BCM • IPDM E/R	IPDM E/R DATA MONITOR "FR WIP REQ"
		IPDM E/R	—
	LO only	• Combination switch • BCM	Combination switch Refer to BCS-56, "Symptom Table".
		Front wiper request signal • BCM • IPDM E/R	IPDM E/R DATA MONITOR "FR WIP REQ"
		IPDM E/R	—
	INT only	• Combination switch • BCM	Combination switch Refer to BCS-56, "Symptom Table".
		Front wiper request signal • BCM • IPDM E/R	IPDM E/R DATA MONITOR "FR WIP REQ"
Front wiper does not operate normally.	Intermittent adjustment cannot be performed.	• Combination switch • Harness between combination switch and BCM • BCM	Combination switch Refer to BCS-56, "Symptom Table".
		BCM	—
	Intermittent control linked with vehicle speed cannot be performed.	Check the vehicle speed detection wiper setting. Refer to BCS-23, "WIPER : CONSULT-III Function (BCM - WIPER)".	
	Wiper is not linked to the washer operation.	• Combination switch • Harness between combination switch and BCM • BCM	Combination switch Refer to BCS-56, "Symptom Table".
		BCM	—
	Does not return to stop position (Repeatedly operates for 10 seconds and then stops for 20 seconds. After that, it stops the operation).	• IPDM E/R • Harness between IPDM E/R and front wiper motor • Front wiper motor	Front wiper auto stop signal circuit Refer to WW-23, "Component Function Check".
Rear wiper does not operate.	ON only	• Combination switch • Harness between combination switch and BCM • BCM	Combination switch Refer to BCS-56, "Symptom Table".
	INT only	• Combination switch • Harness between combination switch and BCM • BCM	Combination switch Refer to BCS-56, "Symptom Table".
	ON and INT	• Combination switch • Harness between combination switch and BCM • BCM	Combination switch Refer to BCS-56, "Symptom Table".
		• BCM • Harness between rear wiper motor and BCM • Harness between rear wiper motor and ground • Rear wiper motor • Glass hatch ajar switch	Combination switch Refer to WW-28, "Component Function Check".

Symptom		Probable malfunction location	Inspection item
Rear wiper does not stop.	ON only	• Combination switch • BCM	Rear wiper motor circuit Refer to WW-28, "Component Function Check".
	INT only	• Combination switch • BCM	Combination switch Refer to BCS-56, "Symptom Table".
Rear wiper does not operate normally.	Wiper is not linked to the washer operation.	• Combination switch • Harness between rear wiper motor and BCM • BCM	Combination switch Refer to BCS-56, "Symptom Table".
		BCM	—
	Rear wiper does not return to the Stop position (Stops after a five-second operation).	• BCM • Harness between rear wiper motor and BCM • Rear wiper motor	Rear wiper auto stop signal circuit Refer to WW-30, "Component Function Check".
	Rear wiper stops after operating for five seconds when ignition switch is turned ON.		

NORMAL OPERATING CONDITION

Description

INFOID:0000000003938671

FRONT WIPER MOTOR PROTECTION FUNCTION

- IPDM E/R may stop the front wiper to protect the front wiper motor if any obstruction (operation resistance) such as a large amount of snow is detected during the front wiper operation.
- At that time turn OFF the front wiper and remove the foreign object. Then wait for approximately 20 seconds or more and reactivate the front wiper. The wiper will operate normally.

REAR WIPER MOTOR PROTECTION FUNCTION

- BCM may stop rear wiper to protect the rear wiper motor when the rear wiper is stopped for 5 seconds or more due to a snowfall.
- Rear wiper operates normally one minute after the obstacles are removed with rear wiper OFF.

FRONT WIPER DOES NOT OPERATE

Description

INFOID:0000000003938672

The front wiper does not operate under any operation conditions.

Diagnosis Procedure

INFOID:0000000003938673

1. CHECK WIPER RELAY OPERATION

IPDM E/R AUTO ACTIVE TEST
1. Start IPDM E/R auto active test. Refer to PCS-12, "Diagnosis Description".
2. Check that the front wiper operates at the LO/HI operation.

CONSULT-III ACTIVE TEST
1. Select "FRONT WIPER" of IPDM E/R active test item.
2. While operating the test item, check front wiper operation.

LO : Front wiper LO operation
HI : Front wiper HI operation
OFF : Stop the front wiper.

Is front wiper operation normal?

YES >> GO TO 5
NO >> GO TO 2

2. CHECK FRONT WIPER MOTOR FUSE

1. Turn the ignition switch OFF.
2. Check that the following fuse is not blown.

Unit	Location	Fuse No.	Capacity
Front wiper motor	IPDM E/R	39	30 A

Is the fuse blown?

YES >> Replace the fuse after repairing the applicable circuit.
NO >> GO TO 3

3. CHECK FRONT WIPER MOTOR GROUND OPEN CIRCUIT

1. Disconnect front wiper motor.
2. Check continuity between front wiper motor harness connector and ground.

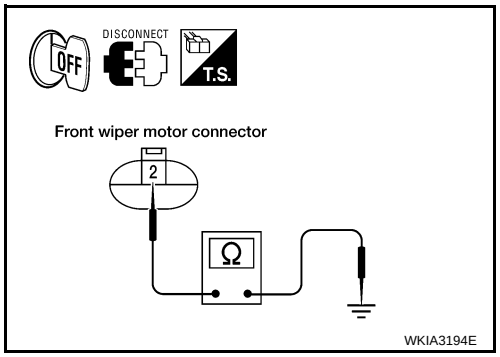

Front wiper motor		Ground	Continuity
Connector	Terminal		
E23	2		Yes

Does continuity exist?

YES >> GO TO 4
NO >> Repair or replace harness.

4. CHECK FRONT WIPER MOTOR OUTPUT VOLTAGE

CONSULT-III ACTIVE TEST

1. Turn the ignition switch ON.
2. Select "FRONT WIPER" of IPDM E/R active test item.
3. With operating the test item, check voltage between IPDM E/R harness connector and ground.

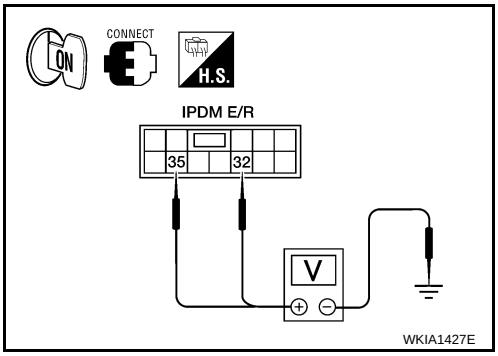

Terminals			Test item	Voltage (Approx.)
(+)		(–)		
IPDM E/R		Ground	FRONT WIPER	
Connector	Terminal			
E121	32		LO	Battery voltage
			OFF	0 V
	35		HI	Battery voltage
			OFF	0 V

Is the measurement value normal?

YES >> Replace front wiper motor. Refer to WW-78, "Removal and Installation".
NO >> Replace IPDM E/R. Refer to PCS-33, "Removal and Installation of IPDM E/R".

5. CHECK FRONT WIPER REQUEST SIGNAL INPUT

CONSULT-III DATA MONITOR

1. Select "FR WIP REQ" of IPDM E/R data monitor item.
2. Switch the front wiper switch to HI and LO.
3. With operating the front wiper switch, check the status of "FR WIP REQ".

Monitor item	Condition		Monitor status
FR WIP REQ	Front wiper switch HI	HI	ON
		STOP	OFF
	Front wiper switch LO	1LOW	ON
		STOP	OFF

Is the status of item normal?

YES >> Replace IPDM E/R. Refer to PCS-33, "Removal and Installation of IPDM E/R".
NO >> GO TO 6

6. CHECK COMBINATION SWITCH

1. Perform the inspection of the combination switch. Refer to BCS-56, "Symptom Table".

Is combination switch normal?

YES >> Replace BCM. Refer to BCS-59, "Removal and Installation".
NO >> Repair or replace the applicable parts.

PRECAUTION

PRECAUTION

Precaution for Supplemental Restraint System (SRS) "AIR BAG" and "SEAT BELT PRE-TENSIONER"

INFOID:0000000003938674

The Supplemental Restraint System such as “AIR BAG” and “SEAT BELT PRE-TENSIONER”, used along with a front seat belt, helps to reduce the risk or severity of injury to the driver and front passenger for certain types of collision. This system includes seat belt switch inputs and dual stage front air bag modules. The SRS system uses the seat belt switches to determine the front air bag deployment, and may only deploy one front air bag, depending on the severity of a collision and whether the front occupants are belted or unbelted.
Information necessary to service the system safely is included in the SR and SB section of this Service Manual.

WARNING:

- **To avoid rendering the SRS inoperative, which could increase the risk of personal injury or death in the event of a collision which would result in air bag inflation, all maintenance must be performed by an authorized NISSAN/INFINITI dealer.**
- **Improper maintenance, including incorrect removal and installation of the SRS, can lead to personal injury caused by unintentional activation of the system. For removal of Spiral Cable and Air Bag Module, see the SR section.**
- **Do not use electrical test equipment on any circuit related to the SRS unless instructed to in this Service Manual. SRS wiring harnesses can be identified by yellow and/or orange harnesses or harness connectors.**

ON-VEHICLE REPAIR

FRONT WIPER AND WASHER SYSTEM

Removal and Installation

INFOID:0000000003938675

FRONT WIPER ARMS

Removal

1. Remove wiper arm covers and wiper arm nuts.
2. Remove front RH wiper arm and front LH wiper arm.
3. Remove front RH blade assembly and front LH blade assembly.

Installation

1. Operate wiper motor one full cycle, then turn "OFF" (Auto Stop).
2. Clean up the pivot area as shown. This will reduce possibility of wiper arm looseness.

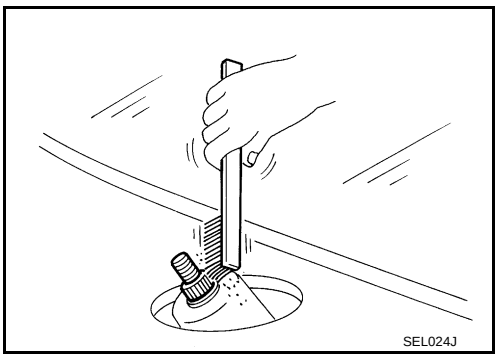

3. Install front RH blade assembly and front LH blade assembly.
4. Install front RH wiper arm and front LH wiper arm.
5. Ensure that wiper blades stop within proper clearance.

FRONT WIPER ARM ADJUSTMENT

1. Operate windshield washer and wiper motor one full cycle, then turn "OFF" (Auto Stop).
2. Lift the wiper blade up and then rest it onto glass surface, check the blade clearance "L1" and "L2".

   Clearance "L1" : 24.5 - 39.5 mm (0.965 - 1.555 in)
   Clearance "L2" : 23.5 - 38.5 mm (0.925 - 1.516 in)

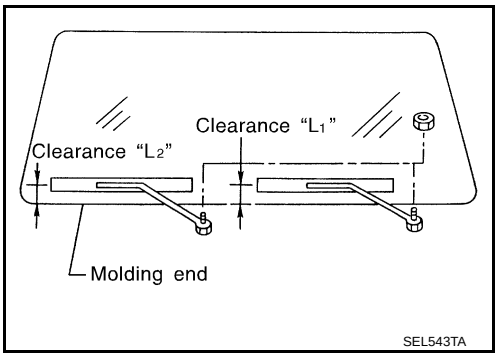

3. Remove wiper arm covers and wiper arm nuts.
4. Adjust front wiper arms on wiper motor pivot shafts to obtain above specified blade clearances.
5. Tighten wiper arm nuts to specified torque, and install wiper arm covers.

   Front wiper arm nuts : 23.6 N·m (2.4 kg-m, 17 ft-lb)

WIPER MOTOR AND LINKAGE

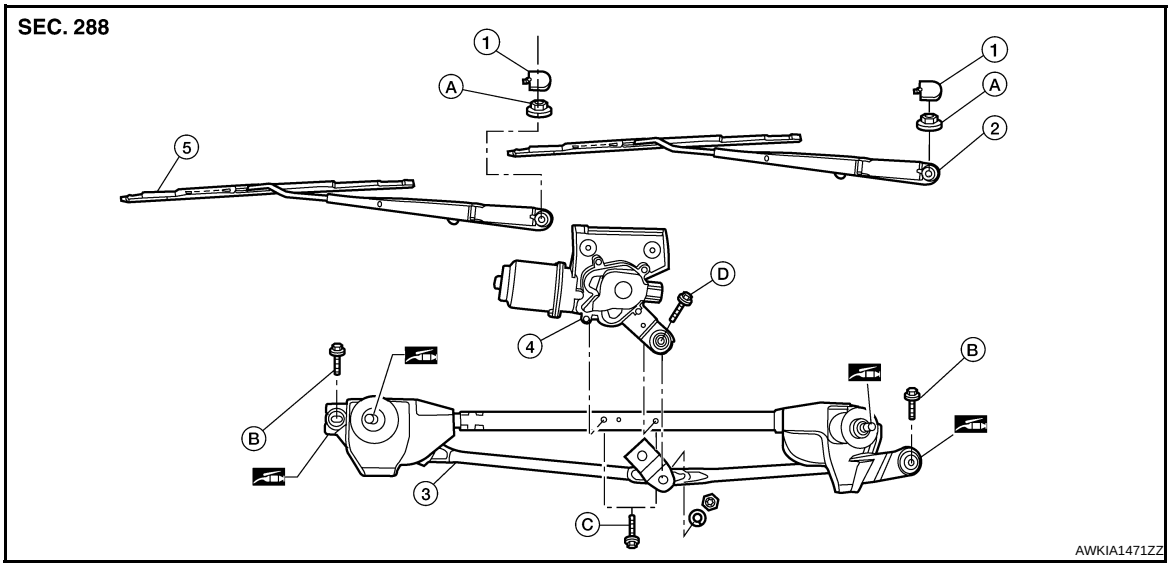

1. Wiper arm covers	2. Front LH wiper arm and blade assembly	3. Wiper frame assembly
4. Wiper motor	5. Front RH wiper arm and blade assembly	A. Wiper arm nuts
B. Wiper arm frame bolts	C. Wiper motor bolts	D. Wiper motor pivot arm bolt

Removal

1. Remove the cowl top. Refer to EXT-19, "Removal and Installation".
2. Remove wiper frame bolts, disconnect the wiper motor connector and remove the wiper frame assembly.

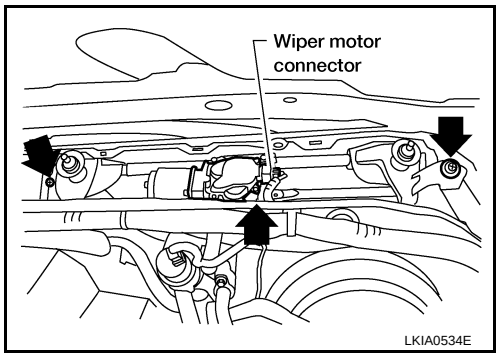

3. Remove wiper motor from wiper frame assembly.

Installation

CAUTION:

- **Do not drop the wiper motor or cause it to contact other parts.**
- **Check the grease conditions of the motor arm and wiper link joint(s). Apply grease if necessary.**

1. Connect wiper motor to connector. Turn the wiper switch ON to operate wiper motor, then turn the wiper switch OFF (auto stop).
2. Disconnect wiper motor electrical connector.
3. Install wiper motor to wiper frame assembly, and install wiper frame assembly.
4. Connect wiper motor electrical connector.
5. Install cowl top. Refer to EXT-19, "Removal and Installation".

WASHER HOSE LAYOUT

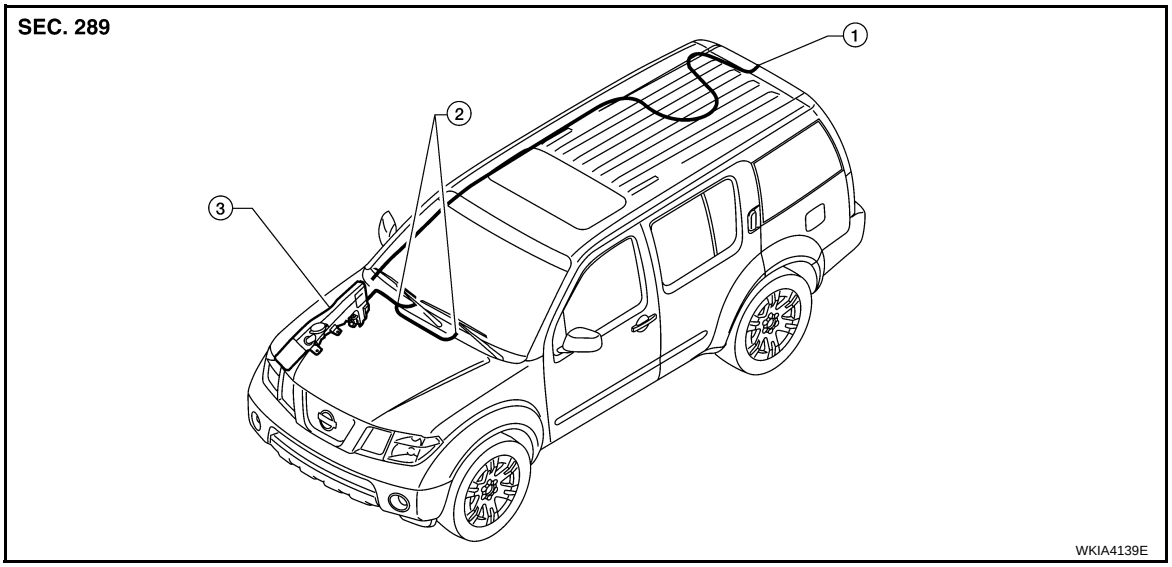

1. Rear washer nozzle
2. Washer nozzles
3. Washer fluid reservoir

WASHER NOZZLES

Removal

1. Remove the cowl top. Refer to EXT-19, "Removal and Installation".
2. Remove washer nozzles.

Installation

Installation is in the reverse order of removal.

WIPER AND WASHER SWITCH

Removal

1. Remove instrument lower cover LH. Refer to IP-10, "Exploded View".
2. Remove steering column cover lower and steering column cover upper.
3. Disconnect wiper and washer switch connector.
4. Pinch tabs at wiper and washer switch base and slide switch away from steering column.

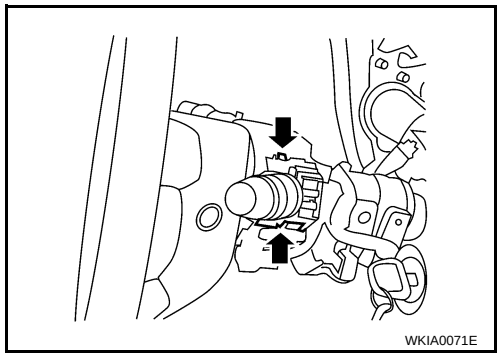

Installation

Installation is in the reverse order of removal.

WASHER FLUID RESERVOIR

Removal

1. Remove the front fender protector RH. Refer to EXT-22, "Removal and Installation of Front Fender Protector".

2. Remove clip, then remove washer fluid reservoir filler neck from washer fluid reservoir.

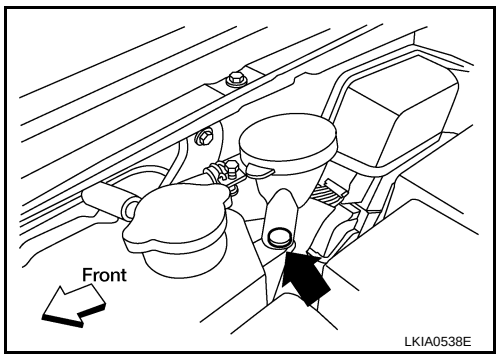

3. Disconnect front and rear washer hoses.
4. Disconnect front and rear washer motor connector.
5. Disconnect washer fluid level sensor connector.

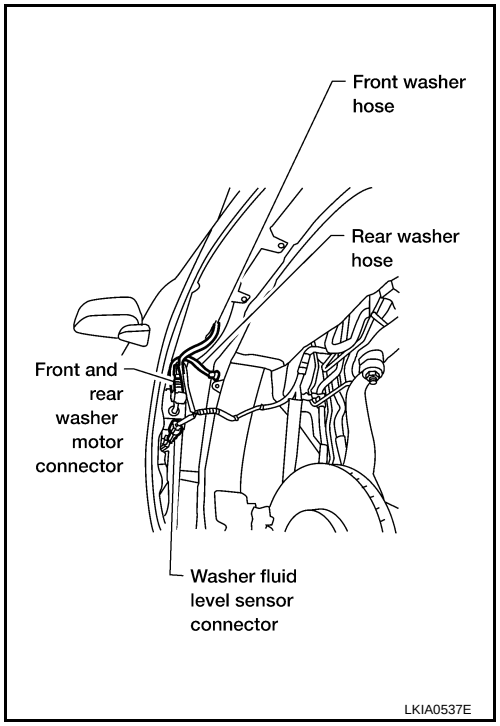

6. Remove washer fluid reservoir screws and remove washer fluid reservoir.

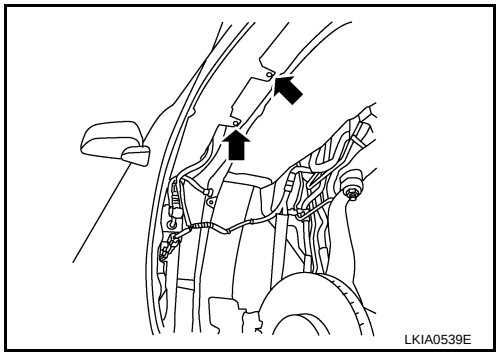

Installation

Installation is in the reverse order of removal.

CAUTION:

After installation, add water up to the upper level of the washer fluid reservoir inlet and check for water leaks.

WASHER MOTOR

Removal

1. Remove RH front fender protector. Refer to EXT-22, "Removal and Installation of Front Fender Protector".
2. Disconnect the front and rear washer hoses.
3. Disconnect the washer motor connectors.

4. Slide retaining ring upward to release front and rear washer motor.

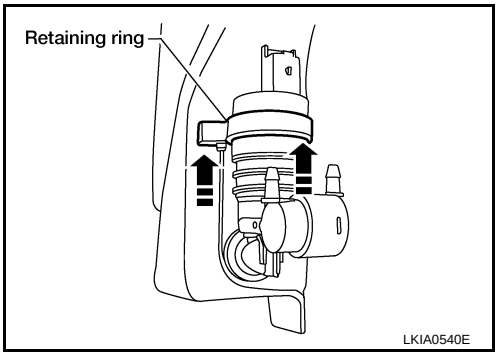

5. Remove front and rear washer motor from washer fluid reservoir.

Installation

Installation is in the reverse order of removal.

CAUTION:

When installing front and rear washer motor, there should be no packing twists, etc.

WASHER FLUID LEVEL SENSOR

Removal

1. Remove washer fluid reservoir.
2. Lift level sensor out of washer fluid reservoir in the direction of the arrow as shown.

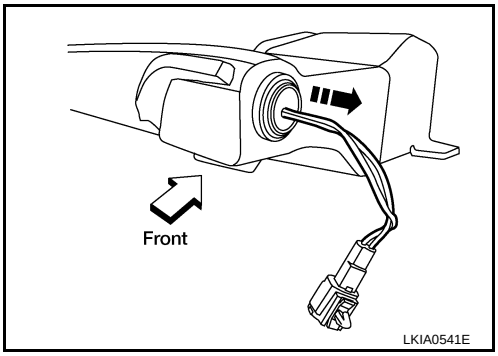

Installation

Installation is in the reverse order of removal.

Washer Nozzle Adjustment

INFOID:0000000003938676

- This vehicle is equipped with non-adjustable washer nozzles.
- If not satisfied with washer fluid spray coverage, confirm that the washer nozzle is installed correctly.
- If the washer nozzle is installed correctly, and the washer fluid spray coverage is not satisfactory, replace the washer nozzle.

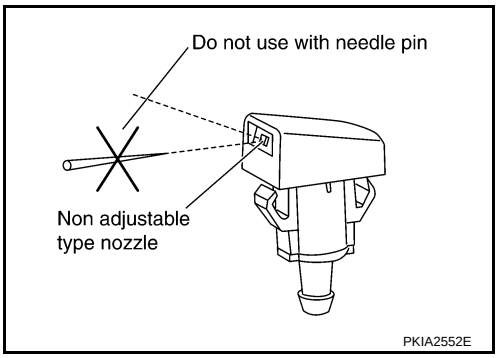

REAR WIPER AND WASHER SYSTEM

Removal and Installation

INFOID:0000000003938677

REAR WIPER ARM

Removal

1. Remove wiper arm cover, and remove rear wiper arm nut.
2. Remove the wiper arm.
3. Remove wiper blade.

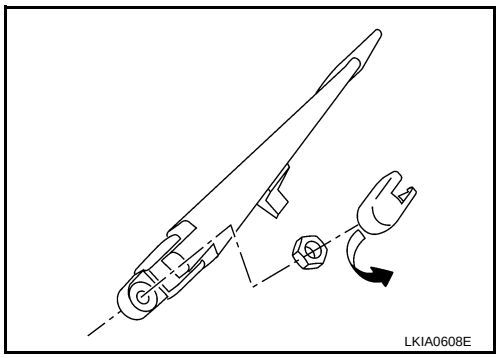

Installation

1. Operate rear wiper motor one full cycle, then turn "OFF" (Auto Stop).
2. Clean pivot area as shown. This will reduce the possibility of wiper arm looseness.

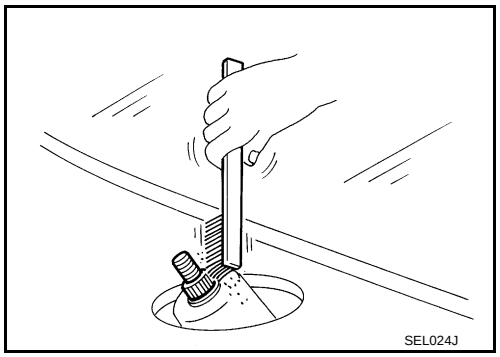

3. Install wiper blade.
4. Install wiper arm so that the arm rests in the stopper and tighten rear wiper arm nut.
5. Install wiper arm cover.

REAR WIPER MOTOR

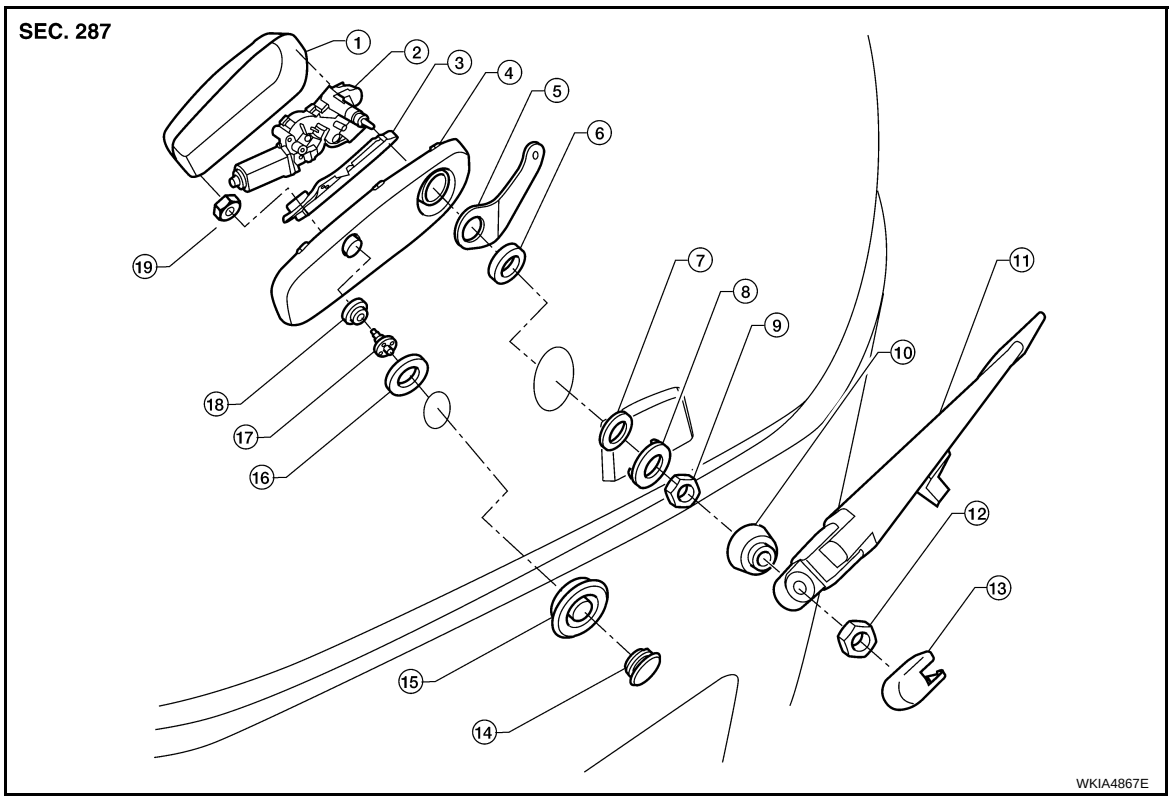

1. Rear wiper motor cover	2. Rear wiper motor	3. Plate
4. Rear wiper motor cover base	5. Bracket	6. Grommet
7. Spacer	8. Washer	9. Rear wiper motor nut
10. Pivot cap	11. Rear wiper arm and blade	12. Wiper arm nut
13. Wiper arm cover	14. Cap nut	15. Gasket
16. Gasket	17. Stud	18. Grommet
19. Nut		

Removal

1. Remove wiper arm. Refer to WW-83, "Removal and Installation".
2. Remove pivot cap.
3. Remove rear wiper motor nut.
4. Remove rear wiper motor cover.
5. Disconnect rear wiper motor connector.
6. Remove nut and remove rear wiper motor.

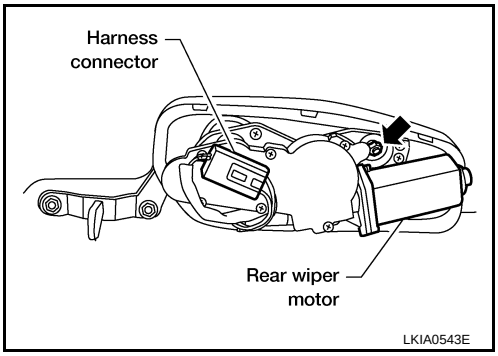

7. Remove rear wiper motor cover base.
8. Remove bracket.

Installation

CAUTION:

- **Do not drop the wiper motor or cause it to contact other parts.**

Installation is in the reverse order of removal.

REAR WASHER TUBE LAYOUT

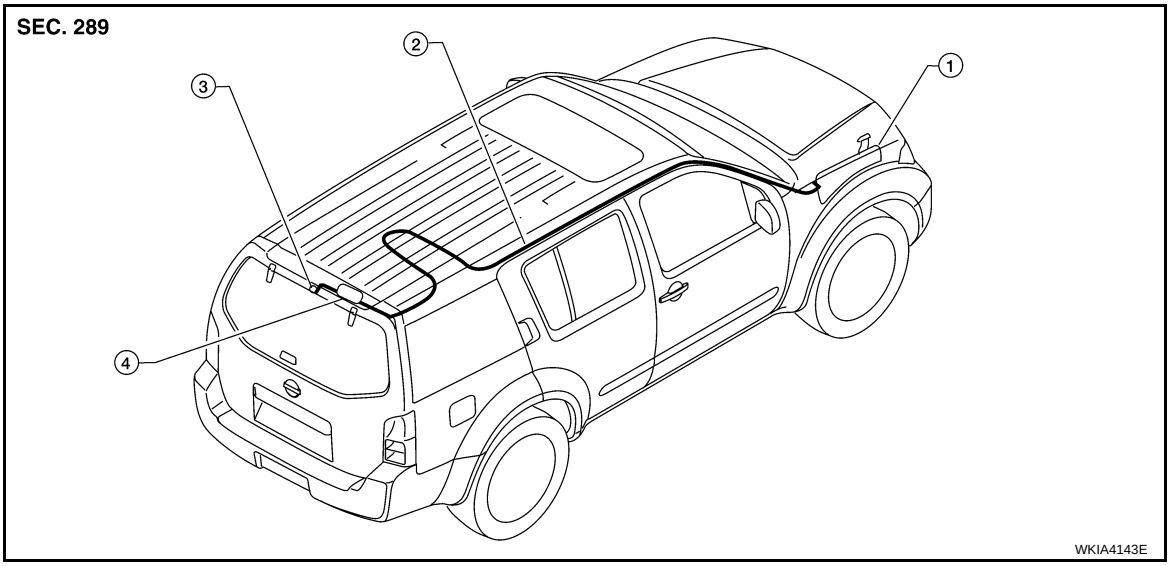

1	Washer fluid reservoir	2	Washer fluid tube to rear door	3	Rear washer nozzle
4	Check valve				

NOTE:
Connect the check valve (2) to the washer fluid tube (1) so that the directional arrow on the check valve (2) points towards the washer nozzle tube (3).

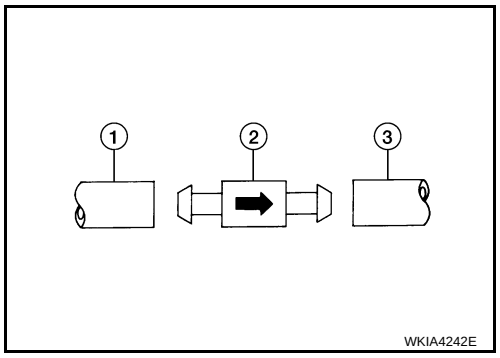

REAR WASHER NOZZLE

Removal

1. Remove the back door window garnish. Refer to INT-25, "Removal and Installation".
2. Disconnect rear washer tube from rear washer nozzle.
3. Release retaining clips and remove washer nozzle.

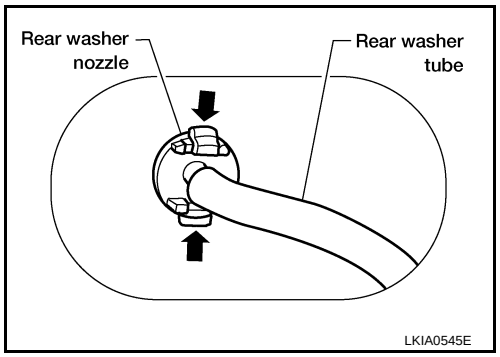

Installation

Installation is in the reverse order of removal.

NOTE:
Inspect rear washer nozzle for proper spray pattern, adjust as necessary. Refer to WW-86, "Rear Washer Nozzle Adjustment".

WASHER FLUID RESERVOIR

Refer to WW-78.

WIPER AND WASHER SWITCH

Refer to EXL-147, "Removal and Installation".

WASHER MOTOR

Refer to WW-78.

Rear Washer Nozzle Adjustment

INFOID:0000000003938678

- Adjust washer nozzle with suitable tool as shown in the figure.

Adjustable range : ±15° (In any direction)