SECTION DLK
DOOR & LOCK

CONTENTS

BASIC INSPECTION

DIAGNOSIS AND REPAIR WORKFLOW

Work Flow

INFOID:0000000001563444

OVERALL SEQUENCE

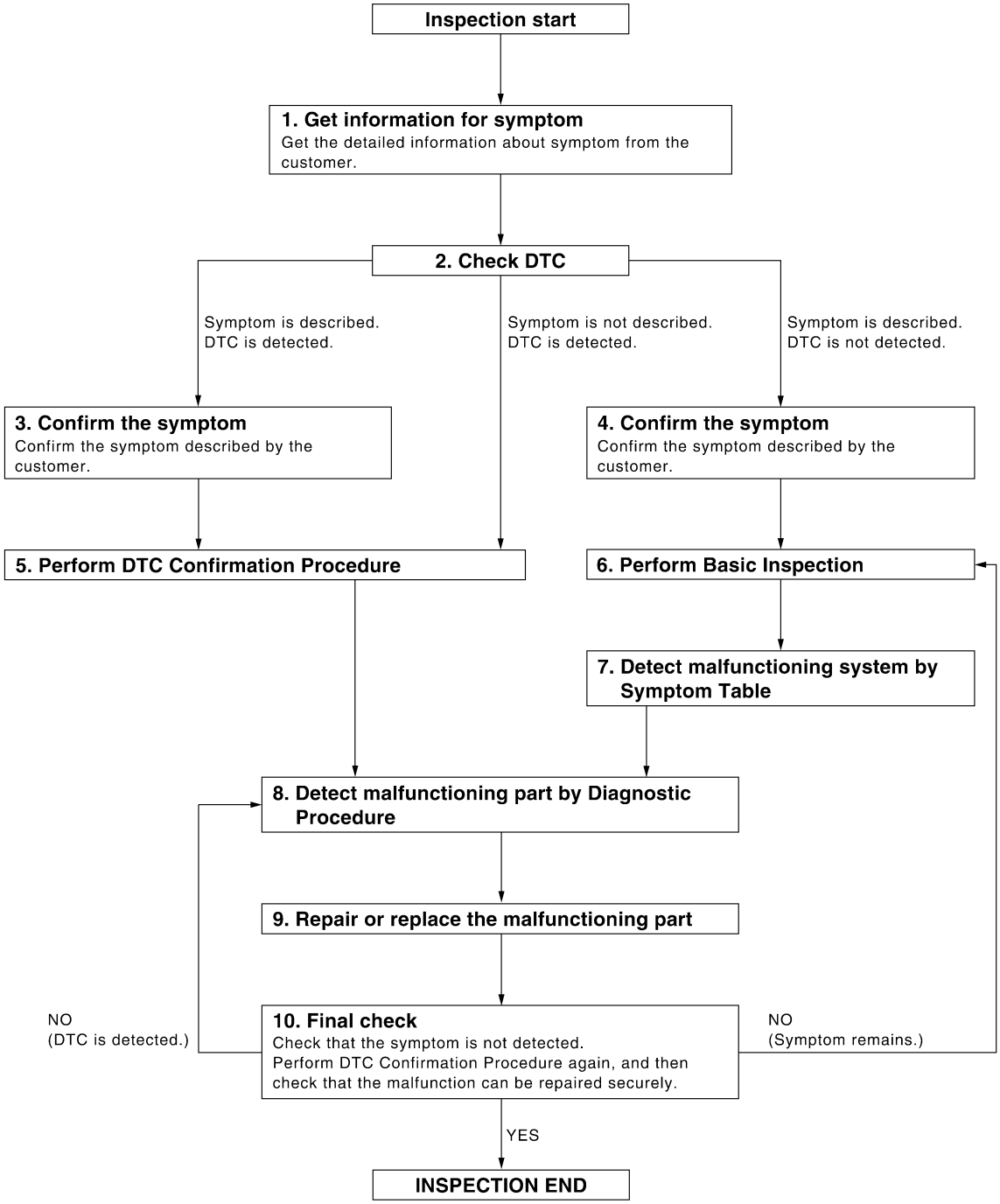

ALKIA0246GB

DETAILED FLOW

1. GET INFORMATION FOR SYMPTOM

Get the detailed information from the customer about the symptom (the condition and the environment when the incident/malfunction occurred).

>> GO TO 2.

2. CHECK DTC

1. Check DTC.
2. Perform the following procedure if DTC is displayed.
- Record DTC and freeze frame data (Print them out with CONSULT-III.)
- Erase DTC.
- Study the relationship between the cause detected by DTC and the symptom described by the customer.
3. Check related service bulletins for information.

Is any symptom described and any DTC detected?

Symptom is described, DTC is displayed>>GO TO 3.
Symptom is described, DTC is not displayed>>GO TO 4.
Symptom is not described, DTC is displayed>>GO TO 5.

3. CONFIRM THE SYMPTOM

Confirm the symptom described by the customer.
Connect CONSULT-III to the vehicle in “DATA MONITOR” mode and check real time diagnosis results.
Verify relation between the symptom and the condition when the symptom is detected.

>> GO TO 5.

4. CONFIRM THE SYMPTOM

Confirm the symptom described by the customer.
Connect CONSULT-III to the vehicle in “DATA MONITOR ” mode and check real time diagnosis results.
Verify relation between the symptom and the condition when the symptom is detected.

>> GO TO 6.

5. PERFORM DTC CONFIRMATION PROCEDURE

Perform DTC Confirmation Procedure for the displayed DTC, and then check that DTC is detected again.
At this time, always connect CONSULT-III to the vehicle, and check diagnostic results in real time.
If two or more DTCs are detected, refer to DLK-128, "DTC Inspection Priority Chart" and determine trouble diagnosis order.

NOTE:
- Freeze frame data is useful if the DTC is not detected.
- Perform Component Function Check if DTC Confirmation Procedure is not included in Service Manual. This simplified check procedure is an effective alternative though DTC cannot be detected during this check.
  If the result of Component Function Check is NG, it is the same as the detection of DTC by DTC Confirmation Procedure.

Is DTC detected?

Yes >> GO TO 8.
No >> Refer to GI-51, "Intermittent Incident".

6. PERFORM BASIC INSPECTION

Perform DLK-8, "Work Flow".

Inspection End>>GO TO 7.

7. DETECT MALFUNCTIONING SYSTEM BY SYMPTOM TABLE

Detect malfunctioning system according to DLK-160, "Symptom Table" based on the confirmed symptom in step 4, and determine the trouble diagnosis order based on possible causes and symptom.

>> GO TO 8.

8. DETECT MALFUNCTIONING PART BY DIAGNOSTIC PROCEDURE

Inspect according to Diagnostic Procedure of the system.

NOTE:

The Diagnostic Procedure described based on open circuit inspection. A short circuit inspection is also required for the circuit check in the Diagnostic Procedure.

Is malfunctioning part detected?

Yes >> GO TO 9.
No >> Check voltage of related BCM terminals using CONSULT-III.

9. REPAIR OR REPLACE THE MALFUNCTIONING PART

1. Repair or replace the malfunctioning part.
2. Reconnect parts or connectors disconnected during Diagnostic Procedure again after repair and replacement.
3. Check DTC. If DTC is displayed, erase it.

>> GO TO 10.

10. FINAL CHECK

When DTC was detected in step 2, perform DTC Confirmation Procedure or Component Function Check again, and then check that the malfunction have been repaired securely.

When symptom was described from the customer, refer to confirmed symptom in step 3 or 4, and check that the symptom is not detected.

OK or NG

NG (DTC is detected)>>GO TO 8.
NG (Symptom remains)>>GO TO 6.
OK >> **INSPECTION END**

INSPECTION AND ADJUSTMENT

ADDITIONAL SERVICE WHEN REPLACING CONTROL UNIT

ADDITIONAL SERVICE WHEN REPLACING CONTROL UNIT : Description

INFOID:0000000001563445

Perform the system initialization when replacing BCM, replacing Intelligent Key or registering an additional Intelligent Key.

ADDITIONAL SERVICE WHEN REPLACING CONTROL UNIT : Special Repair Requirement

INFOID:0000000001563446

Refer to the CONSULT-III Operation Manual for the initialization procedure.

FUNCTION DIAGNOSIS

DOOR LOCK FUNCTION

DOOR LOCK AND UNLOCK SWITCH

DOOR LOCK AND UNLOCK SWITCH : System Diagram

INFOID:0000000001563447

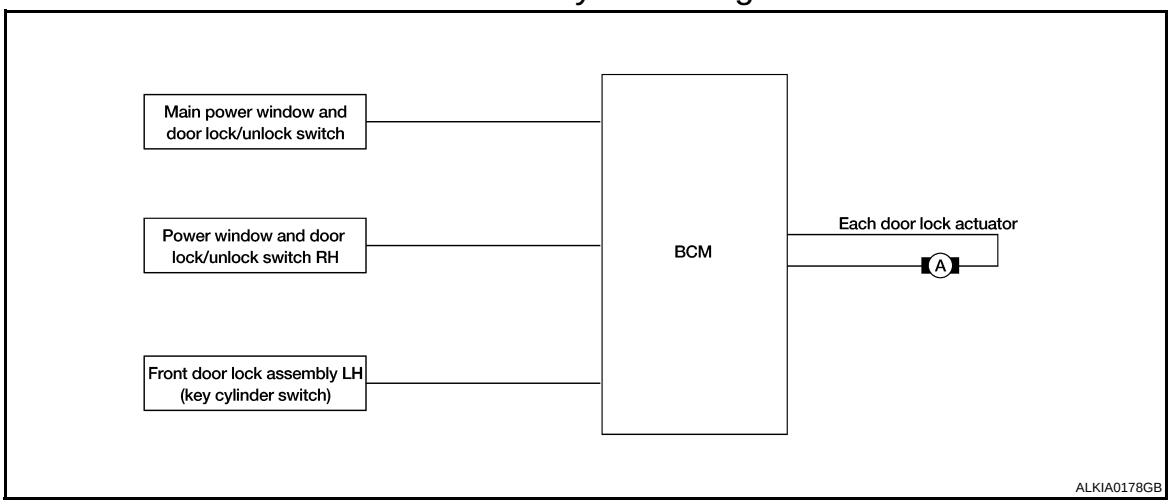

DOOR LOCK AND UNLOCK SWITCH : System Description

INFOID:0000000001563448

Switch	Input/output signal to BCM	BCM function	Actuator
Main power window and door lock/unlock switch	Door lock/unlock signal	Door lock/unlock control	Door lock actuator
Power window and door lock/ unlock switch			
Door key cylinder switch			

DOOR LOCK FUNCTION

Functions Available by Operating the Door Lock and Unlock Switches on Driver Door and Passenger Door

- Interlocked with the locking operation of door lock and unlock switch, door lock actuators of all door lock actuators are locked, back door release switch is disabled.
- Interlocked with the unlocking operation of door lock and unlock switch, door lock actuators of all door lock actuators are unlocked, back door release switch is enabled.

Functions Available by Operating the Key Cylinder Switch on Driver Door

- Interlocked with the locking operation of door key cylinder, door lock actuators of all door lock actuators are locked, back door release switch is disabled.

Selective Unlock Operation

- When door key cylinder is unlocked, door lock actuator driver side is unlocked.
- When door key cylinder is unlocked for the second time within 5 seconds after the first operation, door lock actuators on all doors are unlocked.

Select unlock operation mode can be changed using DOOR LOCK-UNLOCK SET mode in “WORK SUPPORT”. Refer to DLK-30, "DOOR LOCK : CONSULT-III Function (BCM - DOOR LOCK)".

Key Reminder System

Refer to DLK-27, "System Description".

DOOR LOCK AND UNLOCK SWITCH : Component Parts Location

INFOID:0000000001563449

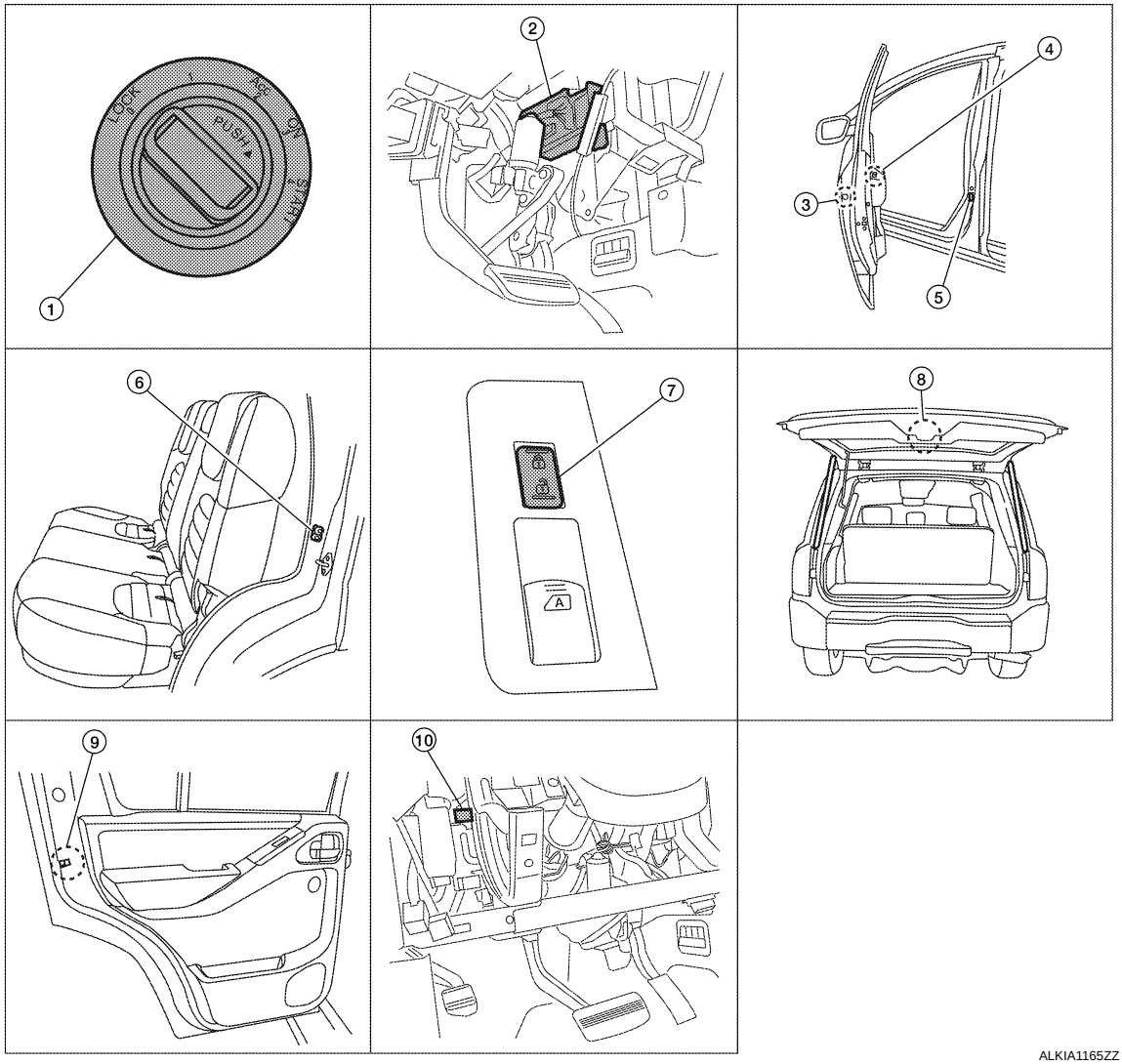

1. Key switch and ignition knob switch M66
2. BCM M18, M19, M20 (view with instrument panel removed)
3. Front door lock assembly LH (key cylinder switch) D14
   Front door lock actuator RH D114
4. Main power window and door lock/unlock switch D7, D8
5. Front door switch
   LH B8
   RH B108
6. Rear door switch
   LH B18
   RH B116
7. Power window and door lock/unlock switch RH D105
8. Back door cinching latch unit (door ajar switch) D502
   Back door lock actuator D508
9. Rear door lock actuator
   LH D205
   RH D305
10. Passenger select unlock relay M11 (view with instrument panel LH removed)

DOOR LOCK AND UNLOCK SWITCH : Component Description

INFOID:0000000001563450

Item	Function
BCM	Controls the door lock function and room lamp function.
Door lock and unlock switch	Transmits lock or unlock signal to BCM.
Door lock actuator	Receives lock/unlock signal from BCM and locks/unlocks each door.

Item	Function
Door switch	Transmits door open/close condition to BCM.
Passenger select unlock relay	Enables or disables the unlocking of rear doors when this Intelligent Key option is selected.

DOOR REQUEST SWITCH

DOOR REQUEST SWITCH : System Diagram

INFOID:0000000001563451

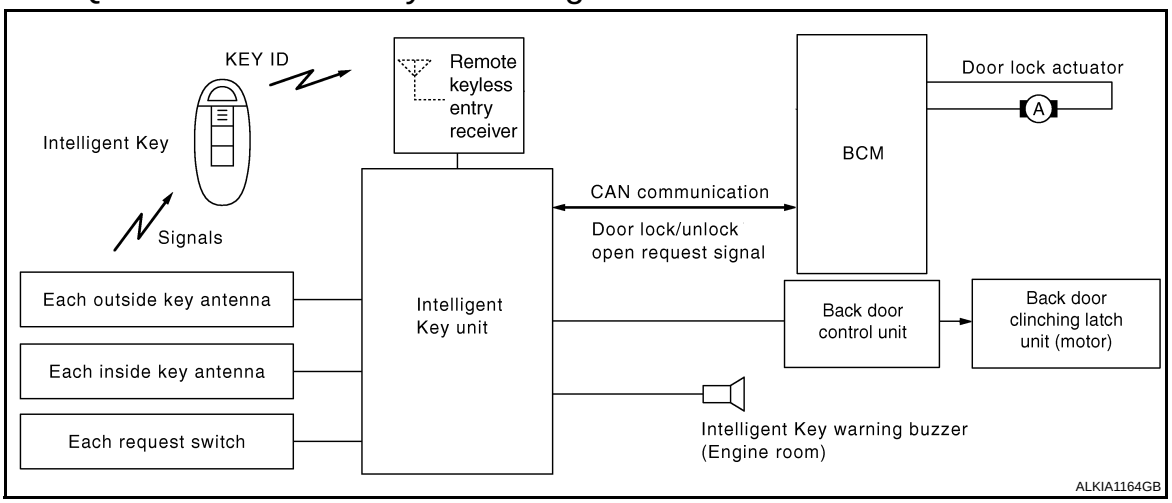

DOOR REQUEST SWITCH : System Description

INFOID:0000000001563452

Only when pressing the request switch, it is possible to lock and unlock the door by carrying the Intelligent Key.

- The Intelligent Key system is a system that makes it possible to lock and unlock the door locks (door lock/unlock function) by carrying the Intelligent Key, which operates based on the results of electronic ID verification using two-way communications between the Intelligent Key and the vehicle (BCM).
  CAUTION:
  The driver should always carry the Intelligent Key
- If an action that does not meet the operating conditions of the Intelligent Key system is taken, the buzzer goes off to inform the driver (Warning chime function).
- When a door lock is locked or unlocked with request switch or remote controller button operation, the hazard lamps flash and the Intelligent Key warning buzzer or horn sounds (Hazard and buzzer/horn reminder function).
- The settings for each function can be changed with the CONSULT-III.
- If an Intelligent Key is lost, a new Intelligent Key can be registered. A maximum of 4 Intelligent Keys can be registered.
- It is possible to perform a diagnosis on the system and register an Intelligent Key with the CONSULT-III.

OPERATION DESCRIPTION/DOOR LOCK/UNLOCK

- When the BCM detects that each door request switch is pressed, it starts the outside key antenna and inside key antenna corresponding to the pressed door request switch and transmits the request signal to the Intelligent Key. And then, check that the Intelligent Key is near the door.
- If the Intelligent Key is within the outside key antenna detection area, it receives the request signal and transmits the key ID signal to the BCM via remote keyless entry receiver.
- BCM receives the key ID signal and compares it with the registered key ID.
- BCM sends the door lock/unlock signal and sounds Intelligent Key buzzer warning (lock: 2 times, unlock: 1 time) at the same time as a reminder.

OPERATION CONDITION

If the following conditions are not satisfied, door lock/unlock operation is not performed even if the request switch is operated.

Each request switch operation	Operation condition
Lock operation	• All doors are closed • Ignition switch is in OFF position • Intelligent Key is outside the vehicle • Intelligent Key is within outside key antenna detection area
Unlock Operation	• Intelligent Key is outside the vehicle • Intelligent Key is within outside key antenna detection area *

*: Even with a registered Intelligent Key remaining inside the vehicle, door locks can be unlocked from outside of the vehicle with a spare Intelligent Key as long as key IDs are different.

OUTSIDE KEY ANTENNA DETECTION AREA

The outside key antenna detection area of door lock/unlock function is in the range of approximately 80 cm (31.50 in) surrounding the driver and passenger door handles (1).

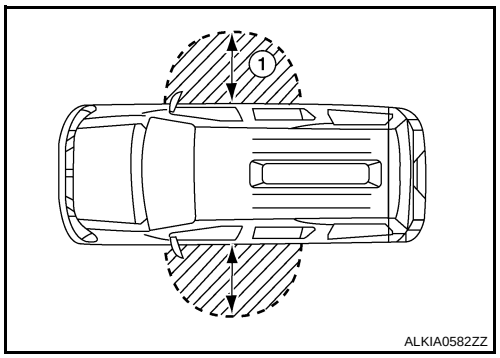

OUTSIDE KEY ANTENNA DETECTION AREA

The outside key antenna detection area of back door lock/unlock function is in the range of approximately 80 cm (31.50 in) surrounding the back door handle (1).

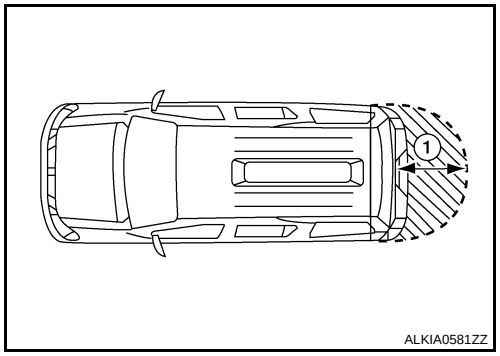

SELECTIVE UNLOCK FUNCTION

When a LOCK signal is sent from door request switch (driver side or passenger side), all doors will be locked.
When an UNLOCK signal is sent from door request switch (driver side or passenger side) once, driver's door will be unlocked.
Then, if an UNLOCK signal is sent from door request switch (driver side and passenger side) again within 5 seconds, all other doors will be unlocked.

HAZARD AND BUZZER REMINDER FUNCTION

During lock or unlock operation by each request switch, the hazard warning lamps and Intelligent Key warning buzzer will blink or honk as a reminder.
When doors are locked, unlocked by each request switch, IPDM E/R honks Intelligent Key warning buzzer as a reminder and transmits hazard request signal to BCM via CAN communication line.
BCM flashes hazard warning lamps as a reminder.

Operating function of hazard warning lamps and buzzer reminder

Operation	Hazard warning lamps flash	Intelligent Key warning buzzer sounds
Unlock	Once	Once
Lock	Twice	Twice
Trunk open	—	Four times

How to change hazard and buzzer reminder mode

Refer to DLK-33, "INTELLIGENT KEY : CONSULT-III Function (BCM - INTELLIGENT KEY)".

AUTO DOOR LOCK FUNCTION

When all doors are locked, ignition switch is in OFF position and key switch is OFF, doors are unlocked with door request switch

When BCM does not receive the following signals within 60 seconds, all doors are locked.

- Door switch is ON (door is opened)
- Door is locked
- Ignition switch is ON (ignition switch is pressed)
- Key switch is ON

Auto door lock mode can be changed by “AUTO LOCK SET” mode in “WORK SUPPORT”. Refer to DLK-33, "INTELLIGENT KEY : CONSULT-III Function (BCM - INTELLIGENT KEY)".

ROOM LAMP OPERATION

When the following conditions are met:

- Condition of interior lamp switch is in DOOR position
- Door switch OFF (all the doors are closed)

Intelligent Key system turns on interior lamp (for up to 30 seconds maximum) by receiving UNLOCK signal from door request switch. For detailed description, refer to DLK-12, "DOOR LOCK AND UNLOCK SWITCH : System Description".

LIST OF OPERATION RELATED PARTS

Parts marked with × are the parts related to operation.

Door lock function	Intelligent Key	Ignition key switch	Remote keyless entry receiver	Door switch	Door request switch (Driver, Passenger)	Door lock actuator	Inside key antenna	Outside key antenna (Driver, Passenger)	Intelligent Key warning buzzer	CAN communication system	BCM	Hazard warning lamp
Door lock/unlock function by request switch	×	×	×	×	×	×	×	×		×	×	
Hazard and buzzer reminder function for door lock/unlock operation									×	×	×	×
Key reminder function	×	×	×	×	×	×	×	×	×	×	×	×
Selective unlock function by request switch (Driver side)	×				×	×	×	×		×	×	
Selective unlock function by request switch (Passenger side)	×				×	×	×	×		×	×	
Auto door lock function	×	×		×	×	×				×	×	

DOOR REQUEST SWITCH : Component Parts Location

INFOID:0000000001563453

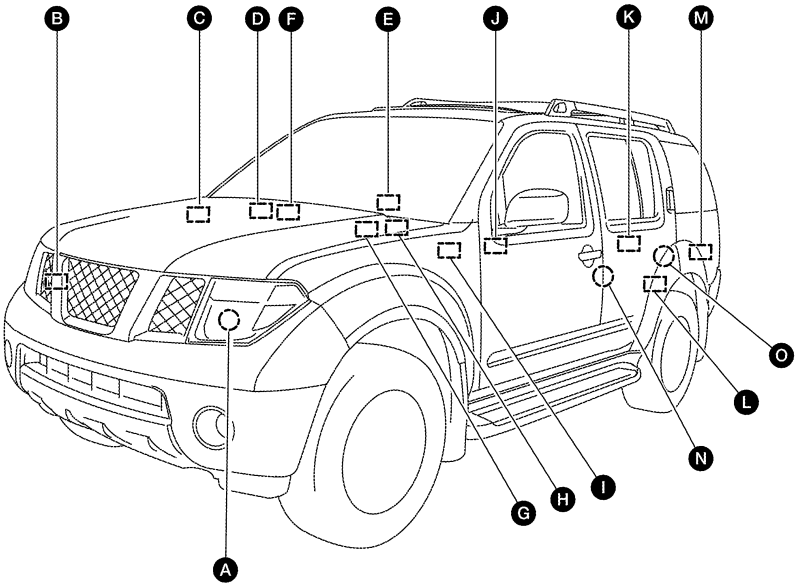

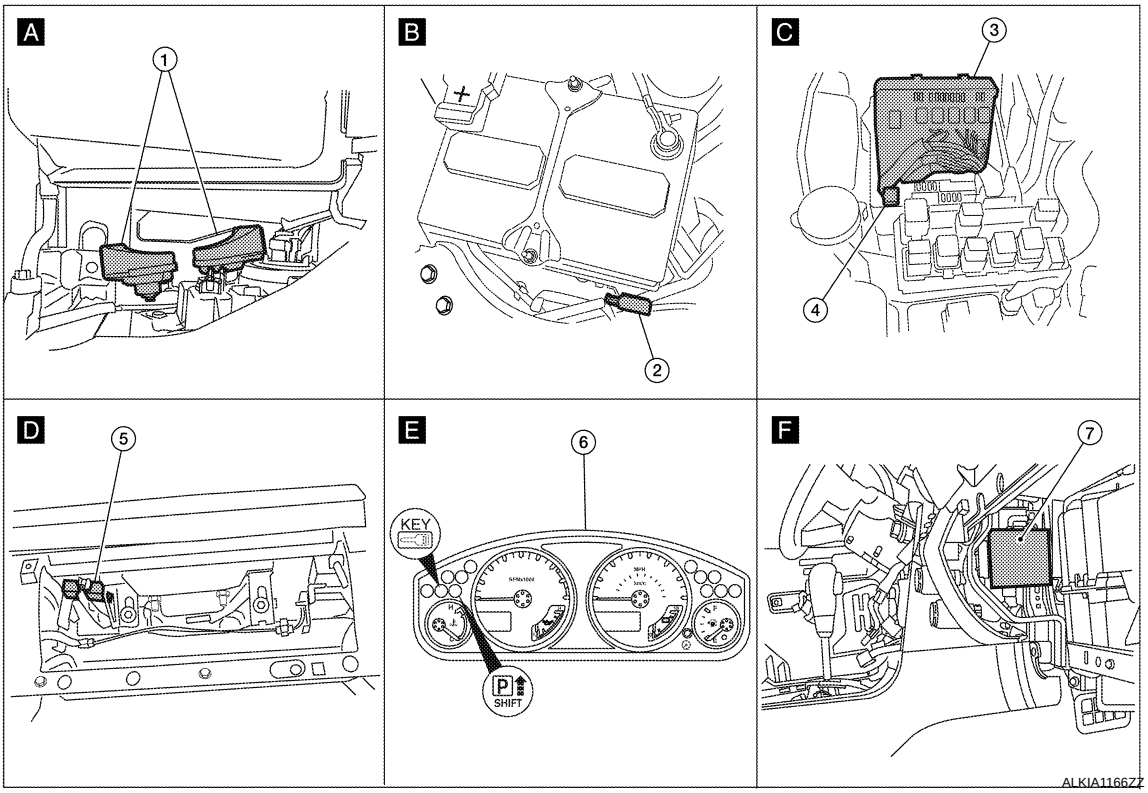

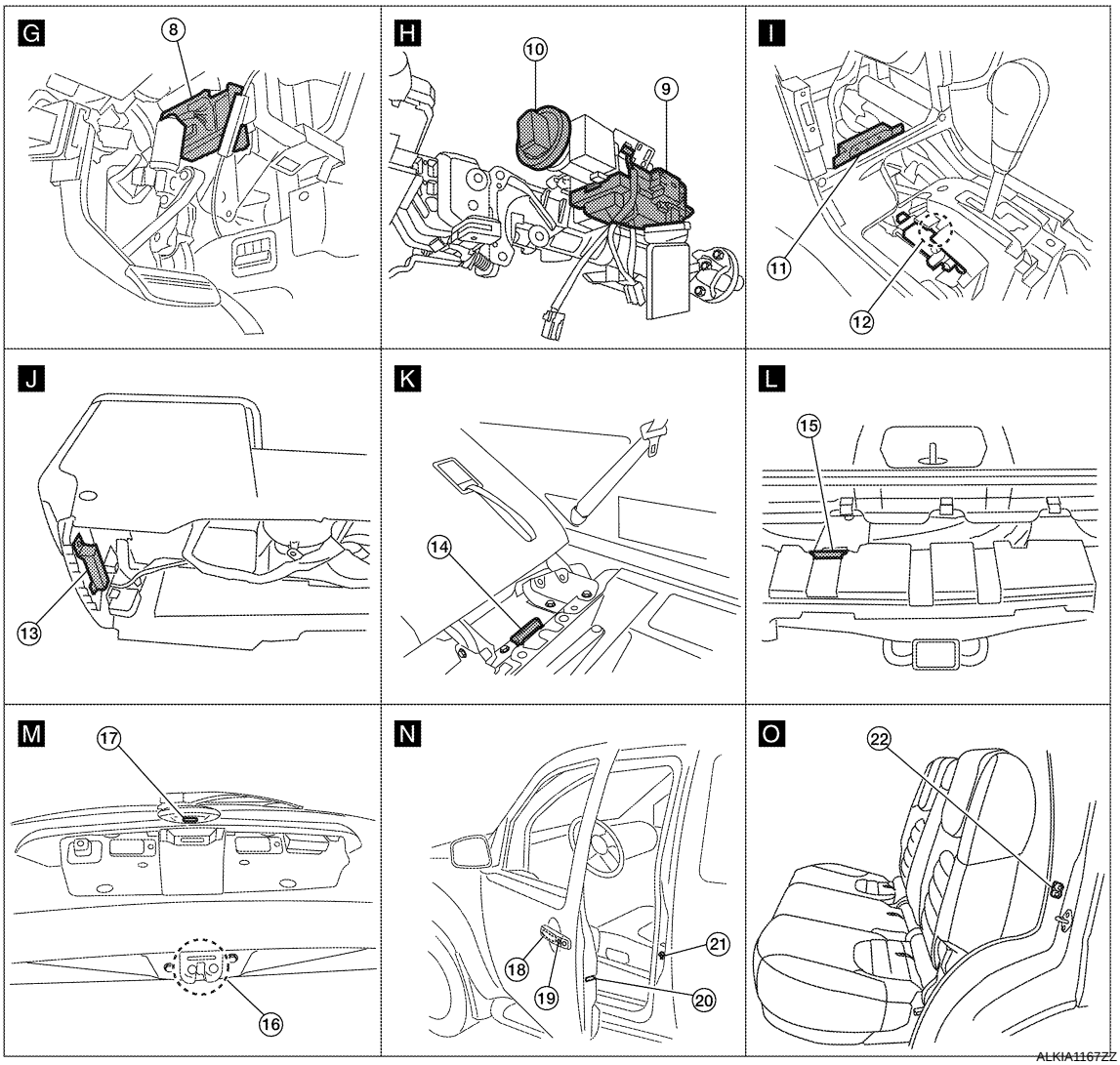

1. Horn E3 (Behind front combination lamp LH)
2. Intelligent key warning buzzer E60
3. IPDM E/R E122, E124 (view with cover removed)
4. Horn relay H-1
5. Remote keyless entry receiver M67 (view with glove box removed)
6. Combination meter M24
7. Intelligent Key unit M164 (view with glove box removed)
8. BCM M18, M19, M20 (view with instrument panel LH removed)
9. Steering lock solenoid M65 (view with steering column removed)
10. Key switch and ignition knob switch M66
11. Inside key antenna 1 (instrument panel) M68 (view with center console cover removed)
12. A/T device (park position switch) M156
13. Inside key antenna 3 (center console) M212 (view with center console removed)
14. Inside key antenna 2 (luggage compartment) B129 (behind right side of 3rd row seat)
15. Rear bumper antenna C127 (view with rear bumper removed)
16. Back door open switch D511
17. Back door request switch D552
18. Front outside antenna LH D15 Front outside antenna RH D115
19. Front door request switch LH D16 Front door request switch RH D116
20. Front door lock assembly LH (door unlock sensor) D14
21. Front door switch LH B8 RH B108
22. Rear door switch LH B18 RH B116

DOOR REQUEST SWITCH : Component Description

INFOID:0000000001563454

Item	Function
Intelligent Key unit	Receives lock/unlock signal from remote keyless entry receiver, and then transmits to BCM.
BCM	Controls the door lock function and room lamp function.
Door lock and unlock switch	Transmits lock or unlock signal to BCM.
Door lock actuator	Receives lock/unlock signal from BCM and locks/unlocks each door.
Door switch	Transmits door open/close condition to BCM.
Remote keyless entry receiver	Receives lock/unlock signal from the Intelligent Key, and then transmits to Intelligent Key unit.
Request switch	Transmits lock/unlock operation to Intelligent Key unit.
Intelligent Key	Transmits button operation to remote keyless entry receiver.
Outside key antenna	Detects if Intelligent Key is outside the vehicle.
Inside key antenna	Detects if Intelligent Key is inside the vehicle.
Intelligent Key warning buzzer	Warns the user of the lock/unlock condition and inappropriate operations with the buzzer sound.

INTELLIGENT KEY

INTELLIGENT KEY : System Diagram

INFOID:0000000001563455

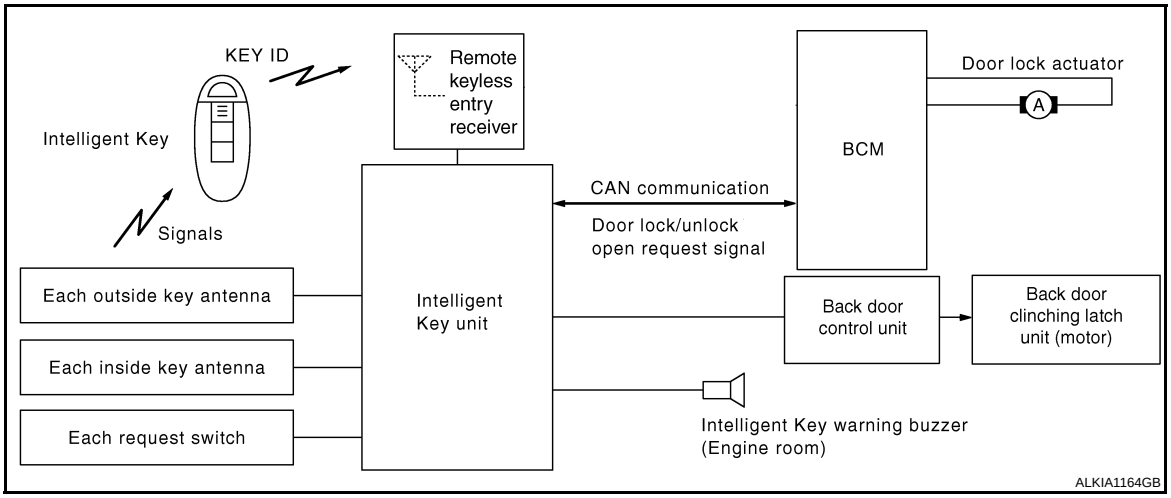

INTELLIGENT KEY : System Description

INFOID:0000000001563456

The Intelligent Key has the same functions as the remote control entry system. In addition to other safety features, it can be used to lock and unlock all doors including the back door.

OPERATION DESCRIPTION/DOOR LOCK/UNLOCK FUNCTION

- When door lock/unlock button of the Intelligent Key is pressed, lock signal or unlock signal is transmitted from Intelligent Key to BCM via remote keyless entry receiver and Intelligent Key unit.
- When BCM receives the door lock/unlock signal, it operates door lock actuator, flashes the hazard lamp (lock: 2 times, unlock: 1 time) and horn chirp signal to IPDM E/R at the same time as a reminder.
- IPDM E/R honks horn (lock: 2 times) as a reminder

OPERATION CONDITION

Remote controller operation	Operation condition	Operation
Lock	• All doors closed	All doors lock
Unlock	• Intelligent Key is out of the ignition key cylinder	All doors unlock

OPERATION AREA

- Operating Range

- To ensure the Intelligent Key works effectively, use within 80 cm range of each doors, however the operable range may differ according to surroundings.

SELECTIVE UNLOCK FUNCTION

When a LOCK signal is transmitted from Intelligent Key, all doors will be locked.
When an UNLOCK signal is transmitted from Intelligent Key once, driver's door will be unlocked.
Then, if an UNLOCK signal is transmitted from Intelligent Key again within 5 seconds, all other doors will be unlocked.

HAZARD AND HORN REMINDER FUNCTION

When doors are locked or unlocked by Intelligent Key, BCM flashes hazard warning lamps as a reminder and sends horn chirp signal to IPDM E/R. IPDM E/R sounds horn as a reminder.
The hazard and horn reminder has a horn chirp mode (C mode) and a non-horn chirp mode (S mode).

Operating function of hazard and horn reminder

	C mode			S mode		
Intelligent Key operation	Lock	Unlock	Back door open	Lock	Unlock	Back door open
Hazard warning lamp flash	Twice	Once	—	Twice	—	—
Horns sound	Once	—	—	—	—	—

Hazard and horn reminders do not operate if any door switch is ON (any door is OPEN).

How to change hazard and horn reminder mode

With CONSULT-III

Refer to DLK-33, "INTELLIGENT KEY : CONSULT-III Function (BCM - INTELLIGENT KEY)".

Without CONSULT-III

Refer to Owner's Manual for instructions.

AUTO DOOR LOCK FUNCTION

Auto Door Lock Function

When all doors are locked, ignition switch is OFF (ignition switch is not pressed) and key switch is OFF, doors are unlocked with Intelligent Key button. When BCM does not receive the following signals within 30 seconds, all doors are locked.

- Door switch is ON (door is opened)
- Door is locked
- Ignition switch is ON
- Key switch is ON (mechanical key is inserted in ignition key cylinder)

Auto door lock mode can be changed by DOOR LOCK-UNLOCK SET mode in “WORK SUPPORT”. Refer to DLK-30, "DOOR LOCK : CONSULT-III Function (BCM - DOOR LOCK)".

PANIC ALARM FUNCTION

When ignition switch is OFF (ignition switch is not pressed) and key switch is OFF, BCM receives PANIC ALARM signal from Intelligent Key through the remote keyless entry receiver and the Intelligent Key unit.
BCM turns on and off headlamp intermittently and transmits theft warning horn signal to IPDM E/R. Then, IPDM E/R turns on and off horn intermittently.
The headlamp flashes and the horn sounds intermittently.
The alarm automatically turns off:

- After 25 seconds
- When BCM receives any signal from Intelligent Key

Panic alarm function mode can be changed by PANIC ALARM SET mode in “WORK SUPPORT”. Refer to DLK-33, "INTELLIGENT KEY : CONSULT-III Function (BCM - INTELLIGENT KEY)".

KEYLESS POWER WINDOW DOWN (OPEN) FUNCTION

Front power windows (with left and right front power window anti-pinch system) open when the unlock button on Intelligent Key is activated and kept pressed for more than 3 seconds with the ignition switch OFF. The windows keep opening if the unlock button is continuously pressed.
The power window opening stops when the following operations are performed:

- When the unlock button is kept pressed more than 15 seconds.
- When the ignition switch is turned ON while the power window opening is operated.
- When the unlock button is released.

While retained power operation activate, Keyless power window down (open) function cannot be operated.

Keyless power window down operation mode can be changed by PW DOWN SET mode in “WORK SUPPORT”. Refer to DLK-33, "INTELLIGENT KEY : CONSULT-III Function (BCM - INTELLIGENT KEY)".

ROOM LAMP ILLUMINATION OPERATION

When the following conditions are met:

- Condition of interior lamp switch is in DOOR position
- Door switch OFF (all the doors are closed)

Intelligent Key system turns on interior lamp (for 30 seconds) by receiving UNLOCK signal from Intelligent Key. For detailed description, refer to DLK-19, "INTELLIGENT KEY : System Description".

LIST OF OPERATION RELATED PARTS

Parts marked with × are the parts related to operation.

Remote keyless entry functions	Intelligent Key	Intelligent Key unit	Key switch and ignition knob switch	Door request switch (Driver, Passenger)	Door switch	Door lock actuator	Intelligent Key warning buzzer	CAN communication system	BCM	Combination meter	Hazard warning lamps	Horn	IPDM E/R	Head lamp
Door lock/unlock function by remote control button	×	×	×		×	×		×	×					
Hazard and horn reminder function	×	×					×	×	×	×	×	×	×	
Selective unlock function	×	×			×	×		×	×					
Keyless power window down (open) function	×	×	×					×	×					
Auto door lock function	×	×	×		×			×	×					
Panic alarm function	×	×		×				×	×			×	×	×

INTELLIGENT KEY : Component Parts Location

INFOID:0000000001563457

Refer to DLK-17, "DOOR REQUEST SWITCH : Component Parts Location".

INTELLIGENT KEY : Component Description

INFOID:0000000001563458

Item	Function
BCM	Controls the door lock function and room lamp function.
Door lock actuator	Receives lock/unlock signal from BCM and locks/unlocks each door.
Remote keyless entry receiver	Receives lock/unlock signal from the Intelligent Key, and then transmits to Intelligent Key unit.
Intelligent Key	Transmits button operation to remote keyless entry receiver.
Intelligent Key unit	Receives button operation from remote keyless entry receiver and transmits to BCM.
Intelligent key warning buzzer	Warns the user of the lock/unlock condition and inappropriate operations with the buzzer sound.

BACK DOOR OPENER FUNCTION

BACK DOOR SWITCH

BACK DOOR SWITCH : System Diagram

INFOID:0000000001563459

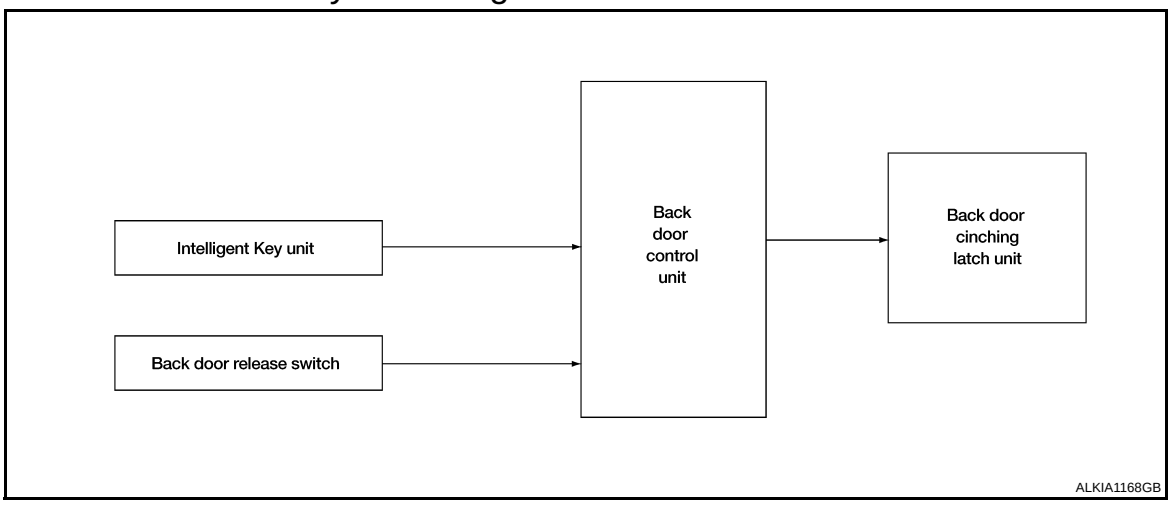

BACK DOOR SWITCH : System Description

INFOID:0000000001563460

BACK DOOR RELEASE SWITCH OPERATION

The back door system consists of two units, the back door control unit and the back door cinching latch unit.

- Back door auto closure
  When the back door is closed to the halfway state (half-latch) position, the motor automatically drives to rotate the latch lever and pull it in from half latched to full latched.

OUTSIDE KEY ANTENNA DETECTION AREA

The outside key antenna detection area of back door open function is in the range of approximately 80 cm (31.50 in) surrounding rear bumper request switch (1). However, this operating range depends on the ambient conditions.

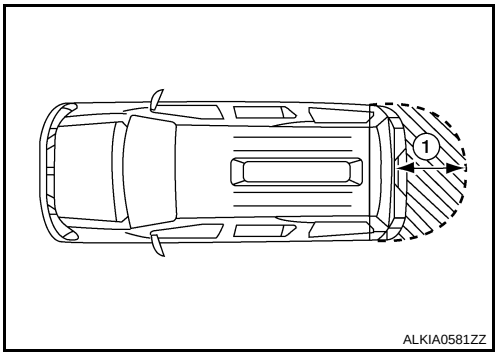

OPERATION DESCRIPTION

Back Door Release Switch Opening Operation

- When the back door release switch is pressed, the Intelligent Key unit terminal 24 receives signal from the back door release switch terminal 1.
- The back door control unit checks the park/neutral switch position and vehicle speed. If the back door operating enable conditions are met, it sends a signal through terminal 23 to the back door control unit terminal 6.
- When the back door control unit receives the signal, if the back door operating enable conditions are met, it sends a signal through terminals 2 and 3 to operate the cinch latch motor to open the back door to the half-latch position.
- When the back door reaches the half-latch state, the half-latch switch detects this and the signal is sent to the back door control unit terminal 7. Continue to press the back door release switch and pull the back door to the full open position.
- When the back door is open, the neutral position sends a signal to the back door control unit terminal 9.

Back Door Release Switch Closing Operation

- When the back door is pulled toward the close position and when it reaches half-latch, the back door cinching latch unit half switch sends a signal from terminal 6.
- The back door control unit receives this signal and checks door position through terminal 7.

- When the back door control unit receives the signal, if the back door operating enable conditions are met, it sends a signal through terminals 2 and 3 to operate the cinch latch motor to close the back door.
- When the back door latch operates and full close is detected through terminal 8 of the back door control unit, the cinch latch motor reverses to the neutral position and the back door auto closure operation ends and the door is fully closed.

BACK DOOR SWITCH : Component Parts Location

INFOID:0000000001563461

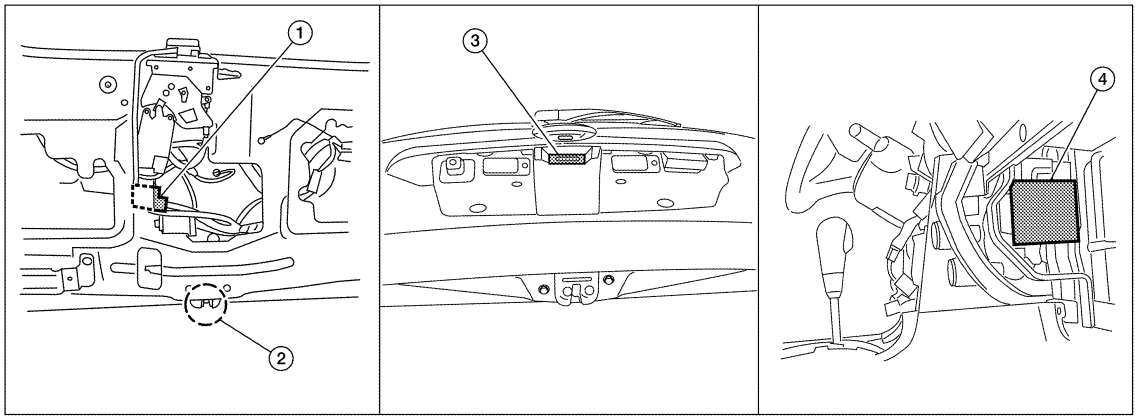

ALKIA1169ZZ

1. Back door control unit D509 (view with back door panel removed)
2. Back door cinching latch unit D502
3. Back door release switch D510
4. Intelligent Key unit M164 (view with glove box removed)

BACK DOOR SWITCH : Component Description

INFOID:0000000001563462

Item	Function
Back door release switch	Transmits back door open operation signal to Intelligent Key unit.
Intelligent Key unit	Transmits back door open operation signal to back door control unit.
Back door control unit	Transmits back door open operation to back door motor.
Back door close switch	Transmits back door close signal to back door control unit.
Back door half switch	Transmits back door half-latch signal to back door control unit.
Back door neutral switch	Transmits back door neutral position to back door control unit.

INTELLIGENT KEY

INTELLIGENT KEY : System Diagram

INFOID:0000000001563463

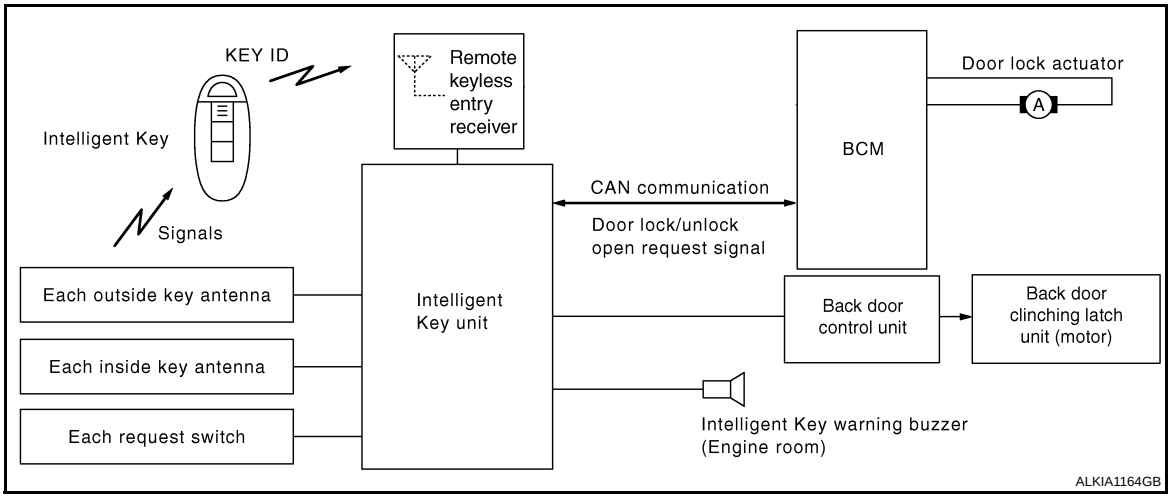

INTELLIGENT KEY : System Description

INFOID:0000000001563464

The Intelligent Key has the same functions as the remote control entry system. Therefore, it can be used in the same manner as the remote controller by operating the back door open button.

OPERATION DESCRIPTION/BACK DOOR OPEN FUNCTION

- When the door unlock button of the Intelligent Key is pressed twice, the back door release switch will be enabled and capable of opening the back door when depressed.

INTELLIGENT KEY : Component Parts Location

INFOID:0000000001563465

Refer to DLK-21, "INTELLIGENT KEY : Component Parts Location".

INTELLIGENT KEY : Component Description

INFOID:0000000001563466

Item	Function
Remote keyless entry receiver	Receives back door open signal from the Intelligent Key, and then transmits to Intelligent Key unit.
Intelligent Key	Transmits button operation to remote keyless entry receiver.
Intelligent Key unit	Receives button operation from remote keyless entry receiver and transmits to back door control unit.
Back door control unit	Receives button operation from Intelligent Key unit and operates the back door.

WARNING FUNCTION

System Description

INFOID:0000000001563467

WARNING CHIME/BUZZER/LAMPS FUNCTION

Operation Description

The following warning chime (combination meter), intelligent key warning buzzer (front of vehicle), and warning lamps "KEY" and “P-SHIFT” (combination meter) are given to the user as warning information while using the intelligent key system.

- Ignition switch warning chime
- Ignition key warning chime
- OFF position warning chime
- OFF position warning chime (after door closed)
- Take away warning chime
- Take away warning chime (from window)
- Door lock operation warning chime
- Intelligent key low battery warning
- P position warning

NOTE:
For key-in-ignition warning chime related issues only, refer to XX-XX, "*****".

Operation Condition

Operation	Condition	Intelligent Key warning sound	Warning lamp illuminates
Ignition switch warning chime	• Key switch is OFF. • Ignition switch is in the ACC, OFF or LOCK position. [ignition switch is pressed (ignition knob switch is ON)]. • Driver door is open.	Chime (Instrument panel)	—
Ignition key warning chime (When mechanical key is used)	• Mechanical key is inserted in ignition switch (key switch is ON). • Ignition switch is in the ACC, OFF or LOCK position. • Driver door is open.	Chime (Instrument panel)	—
OFF position warning chime	• Ignition switch is turned from ACC to OFF. [ignition switch is pressed (ignition knob switch is ON)]. • Ignition switch is in the LOCK position and pressed for 1 second.	Chime (Instrument panel)	—
OFF position warning chime (after door closed)	When driver door is opened and then closed while the OFF position warning chime above is operating.	Buzzer (front of vehicle)	—
Take away warning chime	• Engine is running. • Door open to close. • Intelligent Key is not found inside vehicle.	Buzzer (front of vehicle)	“KEY” (red) blinking
Take away warning chime (from window)	• Engine is running. • Door is closed. • Intelligent Key is not found inside vehicle.	Chime (Instrument panel)	“KEY” (red) blinking
Door lock operation warning chime	When request switch is pushed under the following conditions: • All door are closed. • Door is unlocked. • Intelligent Key is inside vehicle.	Buzzer (front of vehicle)	—
Intelligent Key low battery warning	When Intelligent Key battery is low, Intelligent Key unit is detected after ignition switch is turned ON.	—	“KEY” (green) blinking
P position warning	When selector lever is in other than P position, ignition switch is turned from ON to OFF.	—	“P-SHIFT”

List of Operation Related Parts

Parts marked with × are the parts related to operation.

Warning and alarm functions	Intelligent Key	Key switch	Ignition knob switch	Ignition switch ACC position input signal	Ignition switch ON position input signal	Door switch	Door request switch	Inside key antenna	Front outside antenna (LH, RH)	Rear bumper antenna	Intelligent Key warning buzzer	Intelligent Key unit	CAN communication system	BCM	Combination meter	CVT device (detention switch key)
Ignition switch warning chime			×		×	×						×				
Ignition key warning chime (When mechanical key used)		×			×	×							×	×	×	
OFF position warning chime			×	×	×						×	×				
OFF position warning chime (after door close)			×	×	×	×					×	×				
Take away warning chime	×		×			×		×			×	×			×	
Take away warning chime (from window)	×		×			×		×			×	×			×	
Door lock operation warning chime	×		×			×	×	×	×		×	×				
Intelligent Key low battery warning	×				×			×				×			×	
P position warning					×							×			×	×

Component Parts Location

INFOID:0000000001563468

Refer to DLK-21, "INTELLIGENT KEY : Component Parts Location".

KEY REMINDER FUNCTION

System Description

INFOID:0000000001563469

Key reminder is the function that prevents the key from being left in the vehicle.
Key reminder has the following 3 functions.

Key reminder function	Operation condition	Operation
Driver door closed*	Right after driver side door is closed under the following conditions • Door lock operation is performed • Driver side door is opened • Driver side door is in unlock state	All doors unlock
Door is open or closed	Right after all doors are closed under the following conditions • Intelligent Key is inside the vehicle • Any door is opened • All doors are locked by door lock and unlock switch or door lock knob	• All doors unlock • Sounds Intelligent Key warning buzzer
Back door is closed	Right after trunk is closed under the following conditions • Intelligent Key is inside luggage compartment • All doors are closed • All doors are locked	• Back door open • Sounds Intelligent Key warning buzzer

*:If the door closing impact shocks the door lock knob, or contacts against baggage with the door lock knob might activate the door locks accidentally but unlock operation will be perform in these cases.

CAUTION:

- **The above function operates when the Intelligent Key is inside the vehicle. However, there may be times when the Intelligent Key cannot be detected, and this function will not operate when the Intelligent Key is on the instrument panel, rear of vehicle, or in the glove box. Also, this system sometimes does not operate if the Intelligent Key is in the door pocket for the open door.**
- **When the key reminder function is operated when the trunk is open/closed and the buzzers sound, if the following operations are performed, the key reminder function is cleared and buzzer sounds are stopped.**

- Remote controller door lock button operation of Intelligent Key
- Remote controller door unlock button operation of Intelligent Key
- When the liftgate is closed, the Intelligent Key is not inside the vehicle
- When any door is open

Component Parts Location

INFOID:0000000001563470

Refer to DLK-21, "INTELLIGENT KEY : Component Parts Location".

HAZARD AND BUZZER REMINDER FUNCTION

System Diagram

INFOID:0000000001563471

HAZARD & BUZZER REMINDER FUNCTION

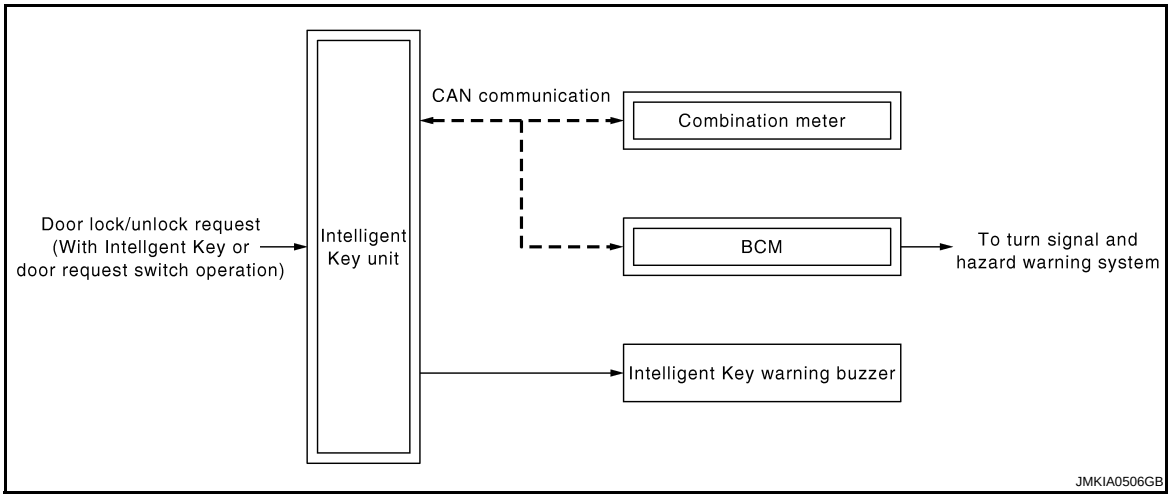

System Description

INFOID:0000000001563472

HAZARD AND BUZZER REMINDER FUNCTION

When door is locked or unlocked by Intelligent Key or door request switch, Intelligent Key unit sounds buzzer and sends hazard request signal to BCM via CAN communication. Then BCM flashes hazard warning lamps as a reminder.

NOTE:

Hazard and buzzer reminder function mode can be changed with CONSULT-III. Refer to DLK-36, "CONSULT-III Function (INTELLIGENT KEY)".

Component Parts Location

INFOID:0000000001563473

Refer to DLK-27, "Component Parts Location".

Component Description

INFOID:0000000001563474

Item	Function
BCM	Controls the hazard and buzzer reminder function (without Intelligent Key).
Intelligent Key unit	Controls the hazard and buzzer reminder function (with Intelligent Key).
Combination meter	Turns ON the LOCK indicator, KEY indicator, turn signal indicator and buzzer (built in combination meter) by the request from Intelligent Key unit via CAN communication.
Intelligent Key warning buzzer	Sounds by the request signal from Intelligent Key unit via CAN communication.

HOMELINK UNIVERSAL TRANSCEIVER

Component Description

INFOID:0000000001563475

Item	Function	Reference page
Homelink universal transceiver	A maximum of 3 radio signals can be stored and transmitted to operate the garage door, etc.	Refer to Owner's Manual

DIAGNOSIS SYSTEM (BCM)

COMMON ITEM

COMMON ITEM : CONSULT-III Function (BCM - COMMON ITEM)

INFOID:0000000001563476

APPLICATION ITEM

CONSULT-III performs the following functions via CAN communication with BCM.

Diagnosis mode	Function Description
WORK SUPPORT	Changes the setting for each system function.
SELF-DIAG RESULTS	Displays the diagnosis results judged by BCM. Refer to DLK-128, "DTC Index".
CAN DIAG SUPPORT MNTR	Monitors the reception status of CAN communication viewed from BCM.
DATA MONITOR	The BCM input/output signals are displayed.
ACTIVE TEST	The signals used to activate each device are forcibly supplied from BCM.
ECU IDENTIFICATION	The BCM part number is displayed.
CONFIGURATION	This function is not used even though it is displayed.

SYSTEM APPLICATION

BCM can perform the following functions for each system.

NOTE:

It can perform the diagnosis modes except the following for all subsystem selection items.

System	Sub system selection item	Diagnosis mode		
		WORK SUPPORT	DATA MONITOR	ACTIVE TEST
Door lock	DOOR LOCK	×	×	×
Warning chime	BUZZER		×	×
Interior room lamp timer	INT LAMP	×	×	×
Turn signal and hazard warning lamps	FLASHER	×	×	×
Intelligent Key system	INTELLIGENT KEY	×	×	×
BCM	BCM	×		
Interior room lamp battery saver	BATTERY SAVER	×	×	×
Back door open	TRUNK		×	
RAP system	RETAINED PWR		×	

DOOR LOCK

DOOR LOCK : CONSULT-III Function (BCM - DOOR LOCK)

INFOID:0000000001563477

BCM CONSULT-III FUNCTION

CONSULT-III performs the following functions via CAN communication with BCM.

Diagnosis mode	Function Description
WORK SUPPORT	Changes the setting for each system function.
DATA MONITOR	The BCM input/output signals are displayed.
ACTIVE TEST	The signals used to activate each device are forcibly supplied from BCM.

WORK SUPPORT

Monitor item	Description
DOOR LOCK-UNLOCK SET	Selective unlock function mode can be changed to operate (WITH) or not operate (WITHOUT) with this mode.

DATA MONITOR

Monitor Item	Contents
REQ SW-DR	Indicates [ON/OFF] condition of door request switch (driver side).
REQ SW-AS	Indicates [ON/OFF] condition of door request switch (passenger side).
REQ SW-BD/TR	Indicates [ON/OFF] condition of trunk opener request switch.
DOOR SW-DR	Indicates [ON/OFF] condition of front door switch (driver side).
DOOR SW-AS	Indicates [ON/OFF] condition of front door switch (passenger side).
DOOR SW-RR	Indicates [ON/OFF] condition of rear door switch RH.
DOOR SW-RL	Indicates [ON/OFF] condition of rear door switch LH.
DOOR SW-BK	Indicates [ON/OFF] condition of back door switch.
CDL LOCK SW	Indicates [ON/OFF] condition of lock signal from door lock unlock switch.
CDL UNLOCK SW	Indicates [ON/OFF] condition of unlock signal from door lock unlock switch.
KEY CYL LK-SW	Indicates [ON/OFF] condition of lock signal from key cylinder.
KEY CYL UN-SW	Indicates [ON/OFF] condition of unlock signal from key cylinder.

ACTIVE TEST

Test item	Description
DOOR LOCK	This test is able to check door lock/unlock operation. • The all door lock actuators are locked when “LOCK” on CONSULT-III screen is touched. • The all door lock actuators are unlocked when “ALL UNLK” on CONSULT-III screen is touched. • The door lock actuator (driver side) is unlocked when “DR UNLK” on CONSULT-III screen is touched. • The door lock actuator (passenger side) is unlocked when “AS UNLK” on CONSULT- III screen is touched. • The door lock actuator (other) is unlocked when “OTR ULK” on CONSULT-III screen is touched.

REMOTE KEYLESS ENTRY

REMOTE KEYLESS ENTRY : CONSULT-III Function (BCM - RKE)

INFOID:0000000001563478

“MULTI REMOTE ENT”

Data Monitor

Monitored Item	Description
DOOR SW-AS	Indicates [ON/OFF] condition of front door switch RH.
DOOR SW-RR	Indicates [ON/OFF] condition of rear door switch RH.
DOOR SW-RL	Indicates [ON/OFF] condition of rear door switch LH.
DOOR SW-DR	Indicates [ON/OFF] condition of front door switch LH.
BACK DOOR SW	Indicates [ON/OFF] condition of back door switch.
KEY ON SW	Indicates [ON/OFF] condition of key switch.
ACC ON SW	Indicates [ON/OFF] condition of ignition switch in ACC position.
IGN ON SW	Indicates [ON/OFF] condition of ignition switch in ON position.
KEYLESS PANIC	Indicates [ON/OFF] condition of panic signal from keyfob.
KEYLESS UNLOCK	Indicates [ON/OFF] condition of unlock signal from keyfob.
KEYLESS LOCK	Indicates [ON/OFF] condition of lock signal from keyfob.
KEY CYL LK-SW	Indicates [ON/OFF] condition of lock signal from door key cylinder switch.
KEY CYL UN-SW	Indicates [ON/OFF] condition of unlock signal from door key cylinder switch.
KEYLESS PBD	Indicates [ON/OFF] condition of power back door signal from keyfob.
CDL UNLOCK SW	Indicates [ON/OFF] condition of unlock signal from lock/unlock switch.
CDL LOCK SW	Indicates [ON/OFF] condition of lock signal from lock/unlock switch.

Monitored Item	Description
DOOR SW-RL	Indicates [ON/OFF] condition of rear door switch LH.
DOOR SW-RR	Indicates [ON/OFF] condition of rear door switch RH.
RKE LCK-UNLCK	Indicates [ON/OFF] condition of lock/unlock signal at the same time from keyfob.
RKE KEEP UNLK	Indicates [ON/OFF] condition of unlock signal from keyfob.

Active Test

Test Item	Description
FLASHER	This test is able to check right and left hazard reminder operation. The right hazard lamp turns on when “RH” on CONSULT-III screen is touched and the left hazard lamp turns on when "LH" on CONSULT-III screen is touched.
POWER WINDOW DOWN	This test is able to check power window down operation. The windows are lowered when “ON” on CONSULT-III screen is touched.
HORN	This test is able to check panic alarm and horn reminder operations. The alarm activate for 0.5 seconds after “ON” on CONSULT-III screen is touched.
DOOR LOCK	This test is able to check door lock operation. The doors lock and unlock based on the item on CONSULT-III screen touched.
TRUNK/BACK DOOR	This test is able to check back door actuator operation. The back door is opened when “OPEN” on CONSULT-III screen is touched.

Work Support

Test Item	Description
REMO CONT ID REGIST	Keyfob ID code can be registered.
REMO CONT ID ERASUR	Keyfob ID code can be erased.
REMO CONT ID CONFIR	It can be checked whether keyfob ID code is registered or not in this mode.
HORN CHIRP SET	Horn chirp function mode can be changed in this mode. The function mode will be changed when "CHANG SETT" on CONSULT-III screen is touched.
HAZARD LAMP SET	Hazard lamp function mode can be changed in this mode. The function mode will be changed when "CHANG SETT" on CONSULT-III screen is touched.
MULTI ANSWER BACK SET	Hazard and horn reminder mode can be changed in this mode. The reminder mode will be changed when “CHANG SETT” on CONSULT-III screen is touched.
AUTO LOCK SET	Auto locking function mode can be changed in this mode. The function mode will be changed when "CHANG SETT" on CONSULT-III screen is touched.
PANIC ALRM SET	Panic alarm operation mode can be changed in this mode. The operation mode will be changed when "CHANG SETT" on CONSULT-III screen is touched.
TRUNK OPEN SET	Back door opener operation mode can be changed in this mode. The operation mode will be changed when "CHANG SETT" on CONSULT-III screen is touched.
PW DOWN SET	Keyless power window down (open) operation mode can be changed in this mode. The operation mode will be changed when "CHANG SETT" on CONSULT-III screen is touched.

Hazard and horn reminder mode

	MODE 1 (C mode)		MODE 2 (S mode)		MODE 3		MODE 4		MODE 5		MODE 6	
Keyfob operation	Lock	Unlock	Lock	Unlock	Lock	Unlock	Lock	Unlock	Lock	Unlock	Lock	Unlock
Hazard warning lamp flash	Twice	Once	Twice	—	—	—	Twice	Once	Twice	—	—	Once
Horn sound	Once	—	—	—	—	—	—	—	Once	—	Once	—

Auto locking function mode

	MODE 1	MODE 2	MODE 3
Auto locking function	5 minutes	Nothing	1 minute

Panic alarm operation mode

	MODE 1	MODE 2	MODE 3
Keyfob operation	0.5 seconds	Nothing	1.5 seconds

Back door open operation mode

	MODE 1	MODE 2	MODE 3
Keyfob operation	0.5 seconds	Nothing	0.5 seconds

Keyless power window down operation mode

	MODE 1	MODE 2	MODE 3
Keyfob operation	3 seconds	Nothing	5 seconds

INTELLIGENT KEY

INTELLIGENT KEY : CONSULT-III Function (BCM - INTELLIGENT KEY)

INFOID:0000000001563479

BCM CONSULT-III FUNCTION

CONSULT-III performs the following functions via CAN communication with BCM.

Diagnosis mode	Function Description
WORK SUPPORT	Changes the setting for each system function.
SELF-DIAG RESULTS	Displays the diagnosis results judged by BCM.
DATA MONITOR	The BCM input/output signals are displayed.
ACTIVE TEST	The signals used to activate each device are forcibly supplied from BCM.

WORK SUPPORT

Monitor item	Description
REMO CONT ID CONFIR	It can be checked whether Intelligent Key ID code is registered or not in this mode.
TAKE OUT FROM WINDOW WARN	Take away warning chime (from window) mode can be changed to operate (ON) or not operate (OFF) with this mode. The operation mode will be changed when (CHANGE SETT" on CONSULT-III screen is touched.
LOCK/UNLOCK BY I-KEY	Door lock/unlock function by door request switch (driver side and passenger side) mode can be changed to operate (ON) or not operate (OFF) with this mode.
PANIC ALARM SET	Panic alarm button pressing time on Intelligent Key remote control button can be selected from the following with this mode. • 0.5 sec. • 1.5 sec. • OFF: Non-operation
PW DOWN SET	Unlock button pressing time on Intelligent Key button to lower front windows can be selected from the following with this mode. • 3 sec. • 5 sec. • OFF: Non-operation
BACK DOOR OPEN DELAY	Back door button pressing time on Intelligent Key button can be selected from the following with this mode. • 0.5 sec. • 1.5 sec. • OFF: No delay
LO- BATT OF KEY FOB WARN	Intelligent Key low battery warning mode can be changed to operate (ON) or not operate (OFF) with this mode.
ANTI KEY LOCK IN FUNCTION	Key reminder function mode can be changed to operate (ON) or not operate (OFF) with this mode.
HORN WITH KEYLESS LOCK	Horn reminder function mode by Intelligent Key button can be changed to operate (ON) or not operate (OFF) with this mode.

Monitor item	Description
HAZARD ANSWER BACK	Hazard reminder function mode can be selected from the following with this mode. • LOCK ONLY: Door lock operation only • UNLOCK ONLY: Door unlock operation only • LOCK AND UNLOCK: Lock/unlock operation • OFF: Non operation
ANS BACK I-KEY LOCK	Buzzer reminder function (lock operation) mode by door request switch (driver side and passenger side) can be selected from the following with this mode. • HORN CHIRP: Sound horn • BUZZER: Sound Intelligent Key warning buzzer • OFF: Non-operation
ANS BACK I-KEY UNLOCK	Buzzer reminder function (unlock operation) mode by door request switch can be changed to operate (ON) or not operate (OFF) with this mode.
INSIDE ANT DIAGNOSIS	This function allows inside key antenna self-diagnosis.

SELF-DIAG RESULT

Refer to DLK-128, "DTC Index".

DATA MONITOR

Monitor Item	Condition
REQ SW-DR	Indicates [ON/OFF] condition of door request switch (driver side).
REQ SW-AS	Indicates [ON/OFF] condition of door request switch (passenger side).
PUSH SW	Indicates [ON/OFF] condition of push button ignition switch.
CLUTCH SW	This item is displayed, but cannot be monitored.
BRAKE SW 1	Indicates [ON/OFF] condition of brake switch.
DETE/CANCL SW	Indicates [ON/OFF] condition of P position.
SFT PN/N SW	Indicates [ON/OFF] condition of P or N position.
S/L -LOCK	Indicates [ON/OFF] condition of steering lock (LOCK).
S/L -UNLOCK	Indicates [ON/OFF] condition of steering lock (UNLOCK).
S/L RELAY-F/B	Indicates [ON/OFF] condition of ignition switch.
UNLK SEN-DR	Indicates [ON/OFF] condition of driver door UNLOCK status.
PUSH SW -IPDM	Indicates [ON/OFF] condition of push button ignition switch.
IGN RLY1 F/B	Indicates [ON/OFF] condition of ignition relay 1.
DETE SW -IPDM	Indicates [ON/OFF] condition of P position.
SFT PN -IPDM	Indicates [ON/OFF] condition of P or N position.
SFT P -MET	Indicates [ON/OFF] condition of P position.
SFT N -MET	Indicates [ON/OFF] condition of N position.
S/L LOCK-IPDM	Indicates [ON/OFF] condition of steering lock (LOCK) request.
S/L UNLOCK-IPDM	Indicates [ON/OFF] condition of steering lock (UNLOCK) request.
S/L RELAY-REQ	Indicates [ON/OFF] condition of steering lock relay.
VEH SPEED 1	Display the vehicle speed signal received from combination meter by numerical value [Km/h].
VEH SPEED 2	Display the vehicle speed signal received from ABS or VDC or CVT by numerical value [Km/h].
DOOR STAT-DR	Indicates [LOCK/READY/UNLK] condition of driver side door status.
DOOR STAT-AS	Indicates [LOCK/READY/UNLK] condition of passenger side door status.
RKE OPE COUN1	When remote keyless entry receiver receives the signal transmitted while operating on Intelligent Key, the numerical value start changing.
RKE OPE COUN2	**NOTE:** This item is displayed, but cannot be monitored.
RKE-LOCK	Indicates [ON/OFF] condition of LOCK signal from Intelligent Key.
RKE-UNLOCK	Indicates [ON/OFF] condition of UNLOCK signal from Intelligent Key.

Monitor Item	Condition
RKE-TR/BD	Indicates [ON/OFF] condition of BACK DOOR OPEN signal from Intelligent Key.
RKE-PANIC	Indicates [ON/OFF] condition of PANIC button of Intelligent Key.
RKE-P/W OPEN	Indicates [ON/OFF] condition of P/W DOWN signal from Intelligent Key.
RKE-MODE CHG	Indicates [ON/OFF] condition of MODE CHANGE signal from Intelligent Key.

ACTIVE TEST

Test item	Description
BATTERY SAVER	This test is able to check interior room lamp operation. The interior room lamp will be activated after “ON” on CONSULT-III screen is touched.
PW REMOTE DOWN SET	This test is able to check power window down operation. The power window down will be activated after “ON” on CONSULT-III screen is touched.
OUTSIDE BUZZER	This test is able to check Intelligent Key warning buzzer operation. Intelligent Key warning buzzer sounds when “ON” on CONSULT-III screen is touched.
INSIDE BUZZER	This test is able to check warning chime by combination meter operation. • Take out warning chime sounds when “TAKE OUT” on CONSULT-III screen is touched. • Key warning chime sounds when “KEY WARN” on CONSULT-III screen is touched. • P position warning chime sounds when “P RNG WARN” on CONSULT-III screen is touched. • ACC warning chime sounds when “ACC WARN” on CONSULT-III screen is touched.
INT LAMP	This test is able to check interior room lamp operation. The interior room lamp will be activated after “ON” on CONSULT-III screen is touched.
LCD	This test is able to check meter display information • Engine start information displays when “BRAKE/P” on CONSULT-III screen is touched. • Engine start information displays when “BRAKE/P/ON” on CONSULT-III screen is touched. • Key ID warning displays when “KEY ID NG” on CONSULT-III screen is touched. • Steering lock information displays when “STLCK RELES” on CONSULT-III screen is touched. • P position warning displays when “P RNG IND” on CONSULT-III screen is touched. • Intelligent Key insert information displays when “INSERT KEY” on CONSULT-III screen is touched. • Intelligent Key low battery warning displays when “KEY BAT LOW” on CONSULT-III screen is touched. • Take away window warning displays when “TK AWAY WDW” on CONSULT-III screen is touched. • Take away warning display when “TAKE AWAY” on CONSULT-III screen is touched. • OFF position warning display when “IGN OFF WARN” on CONSULT-III screen is touched.
TRUNK/GLASS HATCH	This test is able to check back door opener actuator open operation. This actuator opens when “ON” on CONSULT-III screen is touched.
FLASHER	This test is able to check security hazard lamp operation. The hazard lamps will be activated after “ON” on CONSULT-III screen is touched.
HORN	This test is able to check horn operation. The horn will be activated after “ON” on CONSULT-III screen is touched.
IGN CONT2	This test is able to check security hazard lamp operation. The hazard lamps will be activated after “ON” on CONSULT-III screen is touched.
P RANGE	This test is able to check A/T device power supply CVT device power is supplied when “ON” on CONSULT-III screen is touched.

DIAGNOSIS SYSTEM (INTELLIGENT KEY UNIT)

CONSULT-III Function (INTELLIGENT KEY)

INFOID:0000000001563480

APPLICATION ITEM

CONSULT-III performs the following functions via CAN communication with Intelligent Key unit.

Diagnosis mode	Function Description
WORK SUPPORT	Changes the setting for each system function.
SELF-DIAG RESULTS	Displays the diagnosis results judged by Intelligent Key unit.
CAN DIAG SUPPORT MNTR	Monitors the reception status of CAN communication viewed from Intelligent Key unit.
DATA MONITOR	The Intelligent Key unit input/output signals are displayed.
ACTIVE TEST	The signals used to activate each device are forcibly supplied from Intelligent Key unit.
ECU IDENTIFICATION	The Intelligent Key unit part number is displayed.

WORK SUPPORT

Support item	Description	Selection item	Condition
CONFIRM KEY FOB ID	It can check whether Intelligent Key ID code is registered or not.	—	—
TAKE OUT FROM WINDOW WARN	Take away warning chime (from window) mode can be changed.	ON	Active
		OFF	Inactive
LOW BATT OF KEY FOB WARN	Intelligent Key low battery warning mode can be changed.	ON	Active
		OFF	Inactive
KEYLESS FUNCTION	Door lock function with Intelligent Key can be changed.	ON	Active
		OFF	Inactive
ANSWER BACK FUNCTION	Buzzer reminder operation can be changed.	ON	Active
		OFF	Inactive
SELECTIVE UNLOCK FUNCTION	Anti-hijack mode can be changed.	ON	Active
		OFF	Inactive
HAZARD ANSWER BACK	Hazard reminder operation mode can be changed.	Refer to DLK-28.	
ANSWER BACK WITH I-KEY LOCK	Buzzer reminder operation (lock operation) mode by each door request switch can be changed.	BUZZER	Active
		OFF	Inactive
ANSWER BACK WITH I-KEY UNLOCK	Buzzer reminder operation (unlock operation) mode by each door request switch can be changed.	BUZZER	Active
		OFF	Inactive
AUTO RELOCK TIMER	Auto door lock operation mode can be changed.	OFF	Inactive
		2 min	Active
LOCK/UNLOCK BY I-KEY	Door lock function by door request switch can be changed.	ON	Active
		OFF	Inactive

SELF-DIAG RESULT

Refer to DLK-128, "DTC Index".

DATA MONITOR

Monitor Item	Condition
KEY SW	Indicates [ON (inserted)/OFF (removed)] condition of key switch.
DR REQ SW	Indicates [ON (pressed)/OFF (released)] condition of door request switch (driver side).

Monitor Item	Condition
AS REQ SW	Indicates [ON (pressed)/OFF (released)] condition of door request switch (passenger side).
IGN SW	Indicates [ON (ON or START position)/OFF (other than ON and START position)] condition of ignition switch ON position.
ACC SW	Indicates [ON/OFF] condition of ignition switch ACC position.
DOOR LOCK SIG	Indicates [ON/OFF] condition of LOCK signal from Intelligent Key.
DOOR UNLOCK SIG	Indicates [ON/OFF] condition of UNLOCK signal from Intelligent Key.
DOOR SW DR	Indicates [OPEN/CLOSE] condition of front door switch (driver side) from BCM via CAN communication.
DOOR SW AS	Indicates [OPEN/CLOSE] condition of front door switch (passenger side) from BCM via CAN communication.
DOOR SW RR	Indicates [OPEN/CLOSE] condition of rear door switch (RH) from BCM via CAN communication.
DOOR SW RL	Indicates [OPEN/CLOSE] condition of rear door switch (LH) from BCM via CAN communication.
DOOR BK SW	Indicates [OPEN/CLOSE] condition of back door switch from BCM via CAN communication.
VEHICLE SPEED	Displays the vehicle speed signal received from combination meter by numerical value [km/h].

ACTIVE TEST

Test item	Description
DOOR LOCK/UNLOCK	This test is able to check door lock/unlock operation. • ALL UNLK: All door lock actuators are unlocked. • DR UNLK: Door lock actuator (driver side) is unlocked. • AS UNLK: Door lock actuator (passenger side) is unlocked. • BK UNLK: This item is indicated, but inactive. • LOCK: All door lock actuator is locked.
ANTENNA	This test is able to check Intelligent Key antenna operation. When the following condition are met, hazard warning lamps flash. • ROOM ANT1: Inside key antenna (instrument panel) detects Intelligent Key, when “ROOM ANT1” is selected. • ROOM ANT2: Inside key antenna (luggage compartment) detects Intelligent Key, when “ROOM ANT2”is selected. • ROOM ANT3: Inside key antenna (center console) detects Intelligent Key, when “ROOM ANT3” is selected. • DRIVER ANT: Outside key antenna (driver side) detects Intelligent Key, when “DRIVER ANT” is selected. • ASSIST ANT: Outside key antenna (passenger side) detects Intelligent Key, when “ASSIST ANT” is selected. • BK DOOR ANT: Outside key antenna (rear bumper) detects Intelligent Key, when “BK DOOR ANT” is selected.
OUTSIDE BUZZER	This test is able to check Intelligent Key warning buzzer operation. • ON • OFF
INSIDE BUZZER	This test is able to check warning chime in combination meter operation. • TAKE OUT: Take away warning chime sounds. • KNOB: Ignition knob switch warning chime sounds. • KEY: Key warning chime sounds. • OFF

COMPONENT DIAGNOSIS

U1000 CAN COMM CIRCUIT

Description

INFOID:0000000001563481

CAN (Controller Area Network) is a serial communication line for real time applications. It is an on-vehicle multiplex communication line with high data communication speed and excellent error detection ability. Modern vehicle is equipped with many electronic control unit, and each control unit shares information and links with other control units during operation (not independent). In CAN communication, control units are connected with 2 communication lines (CAN H-line, CAN L-line) allowing a high rate of information transmission with less wiring. Each control unit transmits/receives data but selectively reads required data only.
CAN Communication Signal Chart. Refer to LAN-57, "CAN Communication Signal Chart".

DTC Logic

INFOID:0000000001563482

DTC DETECTION LOGIC

DTC	CONSULT-III display description	DTC Detection Condition	Possible cause
U1000	CAN COMM CIRCUIT	When BCM cannot communicate CAN communication signal continuously for 2 seconds or more.	In CAN communication system, any item (or items) of the following listed below is malfunctioning. • Transmission • Receiving (ECM) • Receiving (VDC/TCS/ABS) • Receiving (METER/M&A) • Receiving (TCM)

Diagnosis Procedure

INFOID:0000000001563483

1. PERFORM SELF DIAGNOSTIC

1. Turn ignition switch ON and wait for 2 second or more.
2. Check “Self Diagnostic Result”.

Is “CAN COMM CIRCUIT” displayed?

YES >> Refer to DLK-38, "Diagnosis Procedure".
NO >> Refer to GI-51, "Intermittent Incident".

U1010 CONTROL UNIT (CAN)

DTC Logic

INFOID:0000000001563484

DTC DETECTION LOGIC

DTC	CONSULT-III display description	DTC Detection Condition	Possible cause
U1010	CONTROL UNIT (CAN)	BCM detected internal CAN communication circuit malfunction.	BCM

Diagnosis Procedure

INFOID:0000000001563485

1. REPLACE BCM

When DTC [U1010] is detected, replace BCM.

>> Replace BCM.

Special Repair Requirement

INFOID:0000000001563486

1. REQUIRED WORK WHEN REPLACING BCM

The BCM must be initialized when replaced. Refer to (Body Control System) for BCM configuration.
Initialize NVIS by CONSULT-III. For the details of initialization refer to CONSULT-III operation manual NATS-IVIS/NVIS.

>> Work end.

INSIDE KEY ANTENNA 1 (INSTRUMENT PANEL)

Description

INFOID:0000000001563487

Detects whether Intelligent Key is inside the vehicle.

Component Function Check

INFOID:0000000001563488

1. CHECK INSIDE KEY ANTENNA INPUT SIGNAL

With CONSULT-III

1. Check “ANTENNA” in “Active Test” mode with CONSULT-III.
2. Touch “INSIDE KEY ANTENNA 1”.
3. When Intelligent Key is inside key antenna (instrument panel) detection area, hazard lamps flash.

Test Item	Condition	Possible cause
INSIDE KEY ANTENNA 1	An excessive high or low voltage from inside antenna is sent to the Intelligent Key Unit	• Inside key antenna 1 (instrument panel) • Between Intelligent Key unit and inside key antenna 1 (instrument panel)

Is the inspection result normal?

YES >> Inside key antenna 1 (instrument panel) is OK.
NO >> Refer to DLK-40, "Diagnosis Procedure".

Diagnosis Procedure

INFOID:0000000001563489

1. CHECK INSIDE KEY ANTENNA POWER SUPPLY SIGNAL

1. Turn ignition switch OFF.
2. Check signal between Intelligent Key unit connector and ground with an oscilloscope.

Connector	Item	Terminals (+)	Terminals (–)	Condition	Signal (V) (Reference value)
M164	Intelligent Key unit	15	Ground	Ignition switch is pushed.	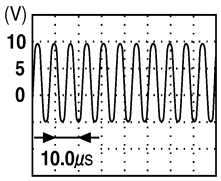 PIIB7441E

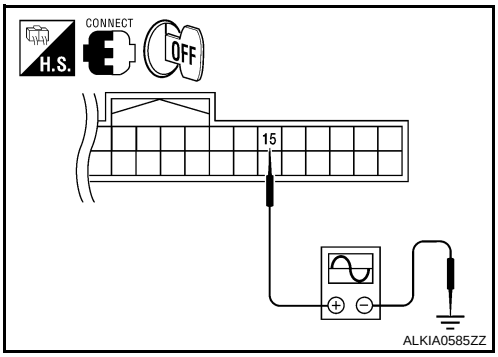

Is the inspection result normal?

YES >> Inside key antenna 1 (instrument panel) is OK.
NO >> GO TO 2.

2. CHECK INSIDE KEY ANTENNA

1. Disconnect Intelligent Key unit connector and inside key antenna 1 (instrument panel) connectors.
2. Check continuity between Intelligent Key unit harness connector (A) M164 terminals 15, 16 and inside key antenna 1 (instrument panel) harness connector (B) M68 terminals 1, 2.

Intelligent Key unit connector	Terminals	Inside key antenna 1 (instrument panel) connector	Terminals	Continuity
A: M164	15	B: M68	1	Yes
	16		2	

3. Check continuity between Intelligent Key unit harness connector (A) M164 terminals 15, 16 and ground.

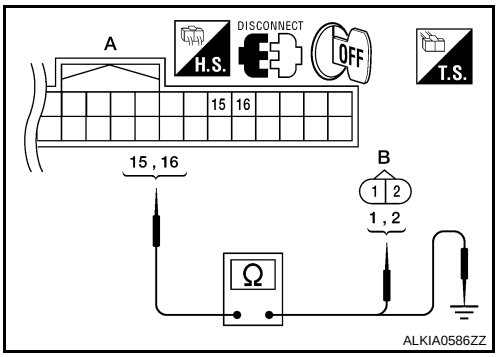

Item	Connector	Terminals		Continuity
Intelligent Key unit	A: M164	15	Ground	No
		16		

Is the inspection result normal?

YES >> GO TO 3.
NO >> Repair or replace harness between Intelligent Key unit and inside key antenna 1 (instrument panel).

3. CHECK INSIDE KEY ANTENNA POWER SUPPLY SINGAL

1. Replace inside key antenna. (New antenna or other antenna)
2. Connect Intelligent Key unit connector.
3. Check signal between Intelligent Key unit connector and ground with oscilloscope.

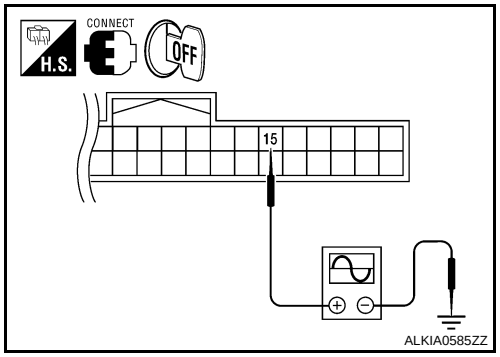

Connector	Item	Terminals (+)	Terminals (–)	Condition	Signal (V) (Reference value)
M164	Intelligent Key unit	15	Ground	Ignition switch is pushed.	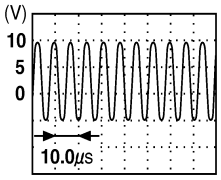 PIIB7441E

Is the inspection result normal?

YES >> Replace inside key antenna 1 (instrument panel).
NO >> Replace Intelligent Key unit. Refer to SEC-95, "Removal and Installation".

INSIDE KEY ANTENNA 2 (LUGGAGE COMPARTMENT)

Description

INFOID:0000000001563496

Detects whether Intelligent Key is inside the vehicle.

Component Function Check

INFOID:0000000001563497

1. CHECK INSIDE KEY ANTENNA INPUT SIGNAL

With CONSULT-III

1. Check “ANTENNA” in “Active Test” mode with CONSULT-III.
2. Touch “INSIDE KEY ANTENNA 2”.
3. When Intelligent Key is inside key antenna (luggage compartment) detection area, hazard lamps flash.

Test Item	Condition	Possible cause
INSIDE KEY ANTENNA 2	An excessive high or low voltage from inside antenna is sent to the Intelligent Key unit	• Inside key antenna 2 (luggage compartment) • Between Intelligent Key unit and inside key antenna 2 (luggage compartment)

Is the inspection result normal?

YES >> Inside key antenna 2 (luggage compartment) is OK.
NO >> Refer to DLK-42, "Diagnosis Procedure".

Diagnosis Procedure

INFOID:0000000001563498

1. CHECK INSIDE KEY ANTENNA POWER SUPPLY SIGNAL

1. Turn ignition switch OFF.
2. Check signal between Intelligent Key unit connector and ground with an oscilloscope.

Connector	Item	Terminals (+)	Terminals (–)	Condition	Signal (V) (Reference value)
M164	Intelligent Key unit	33	Ground	Ignition switch is pushed.	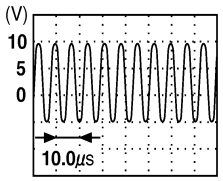 PIIB7441E

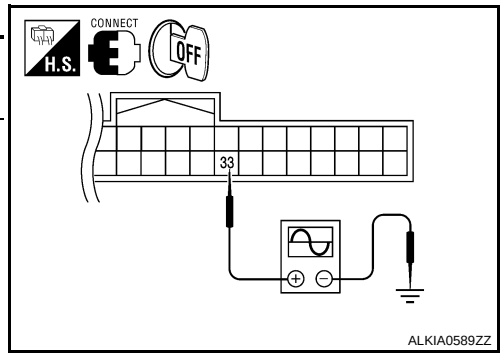

Is the inspection result normal?

YES >> Inside key antenna 2 (luggage compartment) is OK.
NO >> GO TO 2.

2. CHECK INSIDE KEY ANTENNA

1. Disconnect Intelligent Key unit connector and inside key antenna 2 (luggage compartment) connectors.
2. Check continuity between Intelligent Key unit harness connector (A) M164 terminals 33, 34 and inside key antenna 2 (luggage compartment) harness connector (B) B129 terminals 1, 2.

Intelligent Key unit connector	Terminals	Inside key antenna 2 (luggage compartment) connector	Terminals	Continuity
A: M164	33	B: B129	1	Yes
	34		2	

3. Check continuity between Intelligent Key unit harness connector (A) M164 terminals 33, 34 and ground.

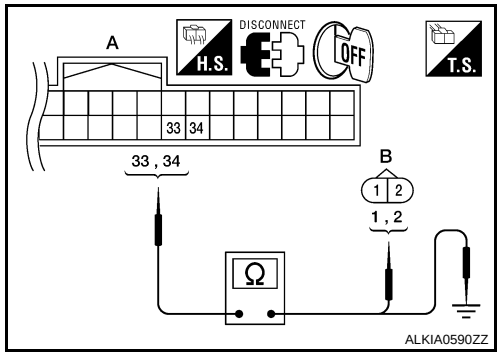

Item	Connector	Terminals		Continuity
Intelligent Key unit	A: M164	33	Ground	No
		34		

Is the inspection result normal?

YES >> GO TO 3.
NO >> Repair or replace harness between Intelligent Key unit and inside key antenna 2 (luggage compartment).

3. CHECK INSIDE KEY ANTENNA POWER SUPPLY SINGAL

1. Replace inside key antenna. (New antenna or other antenna)
2. Connect Intelligent Key unit connector.
3. Check signal between Intelligent Key unit connector and ground with oscilloscope.

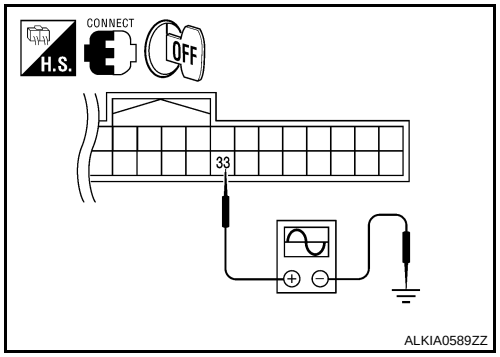

Connector	Item	Terminals (+)	Terminals (–)	Condition	Signal (V) (Reference value)
M164	Intelligent Key unit	33	Ground	Ignition switch is pushed.	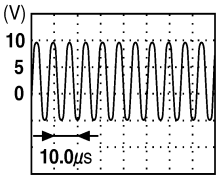 PIIB7441E

Is the inspection result normal?

YES >> Replace inside key antenna 2 (luggage compartment).
NO >> Replace Intelligent Key unit. Refer to SEC-95, "Removal and Installation".

INSIDE KEY ANTENNA 3 (CENTER CONSOLE)

Description - Inside Key Antenna 3 (Center Console)

INFOID:0000000001563493

Detects whether Intelligent Key is inside the vehicle.

Component Function Check

INFOID:0000000001563494

1. CHECK INSIDE KEY ANTENNA INPUT SIGNAL

With CONSULT-III

1. Check “ANTENNA” in “Active Test” mode with CONSULT-III.
2. Touch “INSIDE KEY ANTENNA 3”.
3. When Intelligent Key is inside key antenna (center console) detection area, hazard lamps flash.

Test Item	Condition	Possible cause
INSIDE KEY ANTENNA 3	An excessive high or low voltage from inside antenna is sent to the Intelligent Key Unit	• Inside key antenna 3 (center console) • Between Intelligent Key unit and inside key antenna 3 (center console)

Is the inspection result normal?

YES >> Inside key antenna 3 (center console) is OK.
NO >> Refer to DLK-44, "Diagnosis Procedure".

Diagnosis Procedure

INFOID:0000000001563495

1. CHECK INSIDE KEY ANTENNA POWER SUPPLY SIGNAL

1. Turn ignition switch OFF.
2. Check signal between Intelligent Key unit connector and ground with an oscilloscope.

Connector	Item	Terminals (+)	Terminals (–)	Condition	Signal (V) (Reference value)
M164	Intelligent Key unit	13	Ground	Ignition switch is pushed.	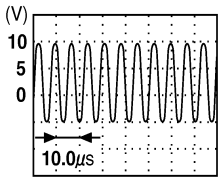 PIIB7441E

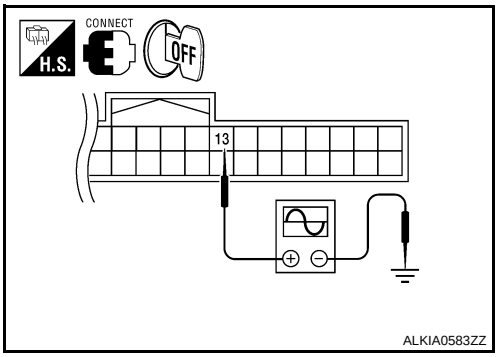

Is the inspection result normal?

YES >> Inside key antenna 3 (center console) is OK.
NO >> GO TO 2.

2. CHECK INSIDE KEY ANTENNA

1. Disconnect Intelligent Key unit connector and inside key antenna 3 (center console) connectors.
2. Check continuity between Intelligent Key unit harness connector (A) M164 terminals 13, 14 and inside key antenna 3 (center console) harness connector (B) M212 terminals 1, 2.

Intelligent Key unit connector	Terminals	Inside key antenna 3 (center console) connector	Terminals	Continuity
A: M164	13	B: M212	1	Yes
	14		2	

3. Check continuity between Intelligent Key unit harness connector (A) M164 terminals 13, 14 and ground.

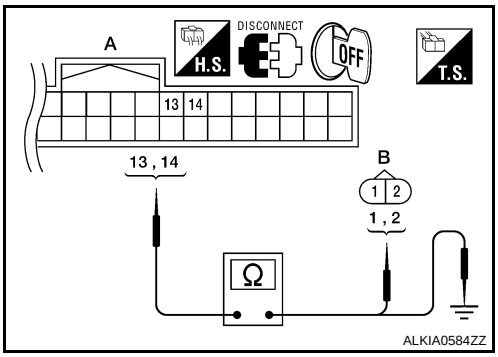

Item	Connector	Terminals		Continuity
Intelligent Key unit	A: M164	13	Ground	No
		14		

Is the inspection result normal?

YES >> GO TO 3.
NO >> Repair or replace harness between Intelligent Key unit and inside key antenna 3 (center console).

3. CHECK INSIDE KEY ANTENNA POWER SUPPLY SINGAL

1. Replace inside key antenna. (New antenna or other antenna)
2. Connect Intelligent Key unit connector.
3. Check signal between Intelligent Key unit connector and ground with oscilloscope.

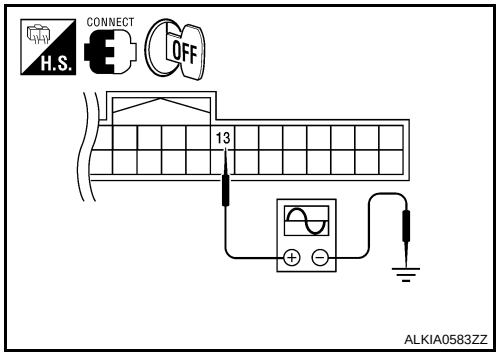

Connector	Item	Terminals (+)	Terminals (–)	Condition	Signal (V) (Reference value)
M164	Intelligent Key unit	13	Ground	Ignition switch is pushed.	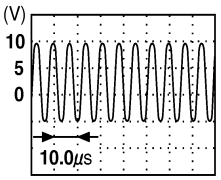 PIIB7441E

Is the inspection result normal?

YES >> Replace inside key antenna 3 (center console).
NO >> Replace Intelligent Key unit. Refer to SEC-95, "Removal and Installation".

POWER SUPPLY AND GROUND CIRCUIT

INTELLIGENT KEY UNIT

INTELLIGENT KEY UNIT : Diagnosis Procedure

INFOID:0000000001563499

1. CHECK POWER SUPPLY CIRCUIT

1. Turn ignition switch OFF.
2. Disconnect Intelligent Key unit connector.
3. Check voltage between Intelligent Key unit harness connector M70 terminals 6, 11 and ground.

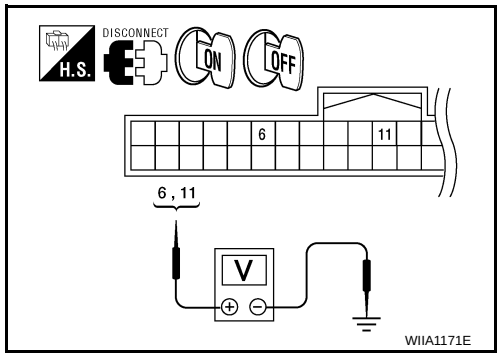

Connector	Terminals		Ignition switch position	
	(+)	(–)	OFF	ON
M70	6	Ground	0V	Battery voltage
	11		Battery voltage	Battery voltage

Is the inspection result normal?

YES >> GO TO 2.
NO >> Repair or replace Intelligent Key power supply circuit.

2. CHECK GROUND CIRCUIT

Check continuity between Intelligent Key unit harness connector M70 terminal 12 and ground.

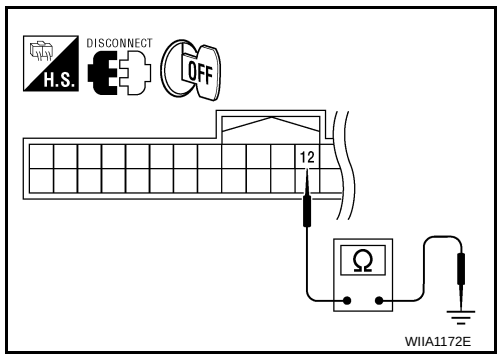

12 - Ground : Continuity should exist.

Is the inspection result normal?

YES >> Power supply and ground circuits are OK.
NO >> Repair or replace the Intelligent Key unit ground circuit.

BCM (BODY CONTROL MODULE)

BCM (BODY CONTROL MODULE) : Diagnosis Procedure

INFOID:0000000001563500

Refer to BCS-32, "Diagnosis Procedure".

BACK DOOR ASSEMBLY

BACK DOOR ASSEMBLY : Diagnosis Procedure

INFOID:0000000001724712

1. CHECK POWER SUPPLY CIRCUIT

1. Turn ignition switch OFF.
2. Disconnect back door control unit connector.
3. Check voltage between back door control unit harness connector D509 terminal 1 and ground.

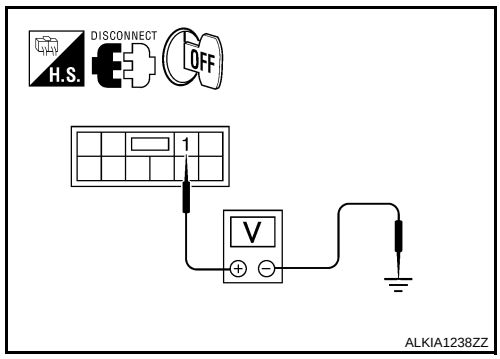

Connector	Terminals		Voltage (V) (Approx.)
D509	(+)	(–)	Battery voltage
	1	Ground	

Is the inspection result normal?

YES >> GO TO 2.
NO >> Repair or replace back door control unit power supply circuit.

2. CHECK GROUND CIRCUIT

Check continuity between back door control unit harness connector D509 terminals 4, 5 and ground.

Connector	Terminals		Continuity
D509	4	Ground	Yes
	5		

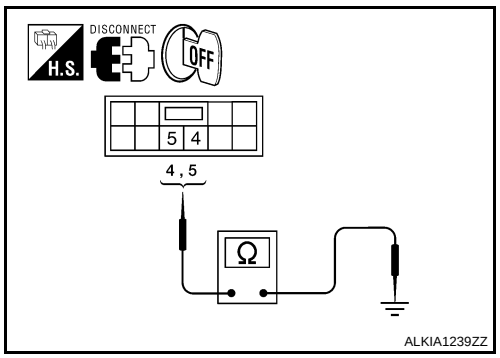

Is the inspection result normal?

YES >> Power supply and ground circuits are OK.
NO >> Repair or replace the back door control unit ground circuit.

DOOR SWITCH

Description

INFOID:0000000001563502

Detects door open/close condition.

Component Function Check

INFOID:0000000001563503

1.CHECK FUNCTION

With CONSULT-III
Check door switches in data monitor mode with CONSULT-III.

Monitor item	Condition
DOOR SW-DR	CLOSE → OPEN: OFF → ON
DOOR SW-AS	
DOOR SW-RL	
DOOR SW-RR	
BACK DOOR SW	

Is the inspection result normal?

YES >> Door switch is OK.
NO >> Refer to DLK-48, "Diagnosis Procedure".

Diagnosis Procedure

INFOID:0000000001563504

1.CHECK DOOR SWITCHES INPUT SIGNAL

With CONSULT-III
Check door switches ("DOOR SW-DR", "DOOR SW-AS", "DOOR SW-RL", "DOOR SW-RR", "BACK DOOR SW") in DATA MONITOR mode with CONSULT–III.

- When doors are open:

DOOR SW-DR :ON
DOOR SW-AS :ON
DOOR SW-RL :ON
DOOR SW-RR :ON
BACK DOOR SW :ON

- When doors are closed:

DOOR SW-DR :OFF
DOOR SW-AS :OFF
DOOR SW-RL :OFF
DOOR SW-RR :OFF
BACK DOOR SW :OFF

Without CONSULT-III
Check voltage between BCM connector M18 or M19 terminals 12, 13, 43, 47, 48 and ground.

Connec-tor	Item	Terminals (+)	Terminals (–)	Condition	Voltage (V) (Approx.)
M19	Back door switch/latch	43	Ground	Open ↓ Closed	0 ↓ Battery voltage
	Front door switch LH	47			
	Rear door switch LH	48			
M18	Front door switch RH	12			
	Rear door switch RH	13			

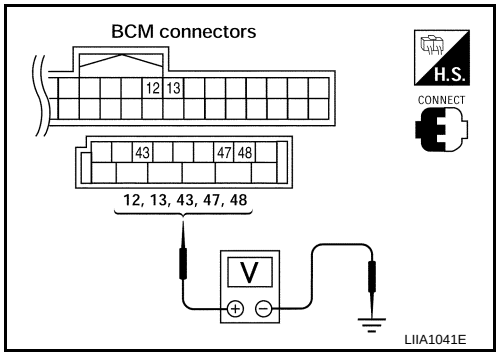

Is the inspection result normal?

YES >> Door switch circuit is OK.
NO >> GO TO 2.

2. CHECK DOOR SWITCH CIRCUIT

1. Turn ignition switch OFF.
2. Disconnect door switch and BCM.
3. Check continuity between BCM connector (A) M18, M19 terminals 12, 13, 43, 47, 48 and door switch connector (B) B8 (Front LH), B108 (Front RH), B18 (Rear LH), B116 (Rear RH) terminal 2 or back door latch connector (C) D502 terminal 7.

2 - 47 :Continuity should exist
2 - 12 :Continuity should exist
2 - 48 :Continuity should exist
2 - 13 :Continuity should exist
7 - 43 :Continuity should exist

4. Check continuity between door switch connector (B) B8 (Front LH), B108 (Front RH), B18 (Rear LH), B116 (Rear RH) terminal 2 or back door latch connector (C) D502 terminal 7 and ground.

2 - Ground :Continuity should not exist
7 - Ground :Continuity should not exist

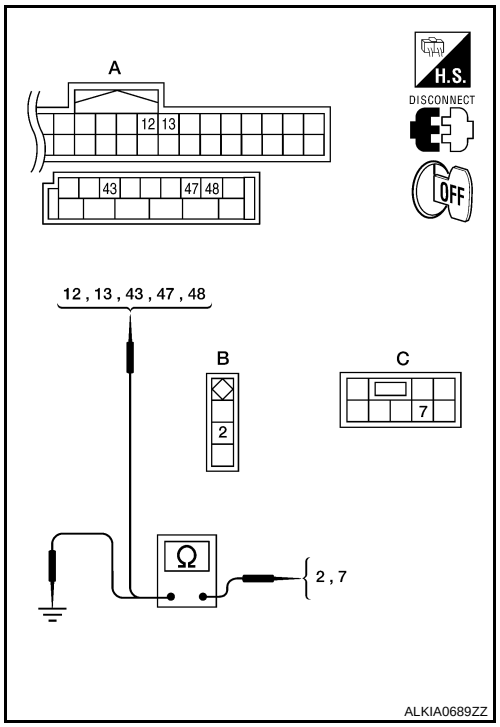

Is the inspection result normal?

YES >> GO TO 3.
NO >> Repair or replace harness.

3. CHECK DOOR SWITCHES

- Disconnect door switch harness.
- Check continuity between door switch connector terminals.

Switch	Terminals	Condition	Continuity
A: Door switch (front and rear)	2 – Ground	Open	Yes
		Closed	No
B: Back door switch	7 – Ground	Open	Yes
		Closed	No

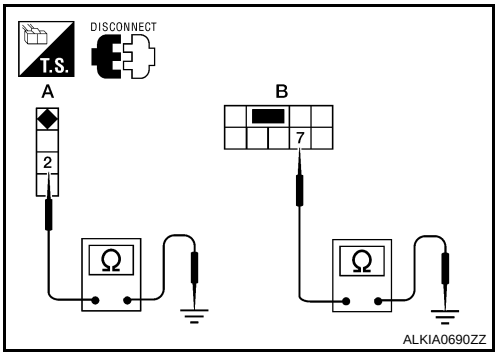

Is the inspection result normal?

YES >> Door switch circuit is OK.
NO >> (Front and rear doors) Replace door switch.
NO >> (Back door) GO TO 4.

4. CHECK BACK DOOR SWITCH CIRCUIT

- Check continuity between door switch connector terminal and ground.

Connector	Terminals	Continuity
Back door switch	8 – Ground	Yes

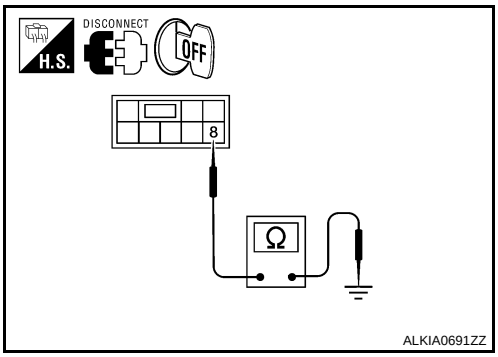

Is the inspection result normal?

YES >> Replace back door switch.
NO >> Repair or replace harness.

DOOR LOCK AND UNLOCK SWITCH

DRIVER SIDE

DRIVER SIDE : Description

INFOID:0000000001563505

Transmits door lock/unlock operation to BCM.

DRIVER SIDE : Component Function Check

INFOID:0000000001563506

1.CHECK FUNCTION

With CONSULT-III

Check CDL LOCK SW, CDL UNLOCK SW in Data Monitor mode with CONSULT-III.

Monitor item	Condition	
CDL LOCK SW	LOCK	: ON
	UNLOCK	: OFF
CDL UNLOCK SW	LOCK	: OFF
	UNLOCK	: ON

Is the inspection result normal?

YES >> Door lock and unlock switch is OK.
NO >> refer to DLK-51, "DRIVER SIDE : Diagnosis Procedure".

DRIVER SIDE : Diagnosis Procedure

INFOID:0000000001563507

1.CHECK DOOR LOCK/UNLOCK SWITCH INPUT SIGNAL

With CONSULT-III

Check main power window and door lock/unlock switch ("CDL LOCK SW", "CDL UNLOCK SW") in DATA MONITOR mode in CONSULT–III.

- When main power window and door lock/unlock switch is turned to LOCK:

CDL LOCK SW :ON

- When main power window and door lock/unlock switch is turned to UNLOCK:

CDL UNLOCK SW :ON

Without CONSULT-III

1. Remove key from ignition key cylinder.
2. Using an oscilloscope, check the signal between BCM connector M18 terminal 22 and ground when the main power window and door lock/unlock switch is turned to LOCK or UNLOCK.
3. Make sure the signals which are shown in the figure below can be detected during 10 seconds just after the door lock/unlock switch is turned to LOCK or UNLOCK.

Connector	Terminal		Voltage (V)
	(+)	(–)	
M18	22	Ground	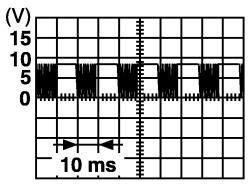

PIIA1297E

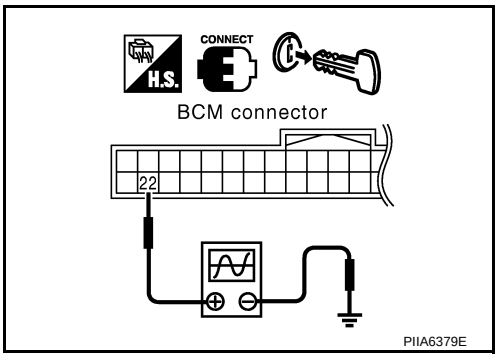

PIIA6379E

Is the inspection result normal?

YES >> Door lock and unlock switch circuit is OK.

NO >> GO TO 2.

2. CHECK BCM OUTPUT SIGNAL

Check ("POWER WINDOW DOWN") in ACTIVE TEST mode for "MULTI REMOTE ENT" with CONSULT–III.

When "ACTIVE TEST" is performed, the front windows should be lowered.

Is the inspection result normal?

YES >> GO TO 3.
NO >> Replace BCM. Refer to BCS-54, "Removal and Installation".

3. CHECK DOOR LOCK/UNLOCK SWITCH GROUND HARNESS

1. Turn ignition switch OFF.
2. Disconnect main power window and door lock/unlock switch.
3. Check continuity between main power window and door lock/unlock switch connector D8 terminal 17 and ground.

17 - Ground : Continuity should exist.

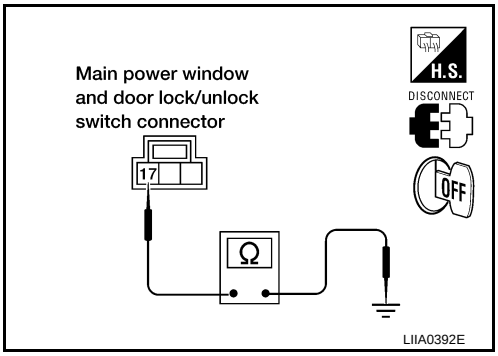

Is the inspection result normal?

YES >> GO TO 4.
NO >> Repair or replace harness.

4. CHECK POWER WINDOW SERIAL LINK CIRCUIT

1. Disconnect BCM.
2. Check continuity between BCM connector M18 terminal 22 and main power window and door lock/unlock switch connector D7 terminal 14.

22 - 14 : Continuity should exist.

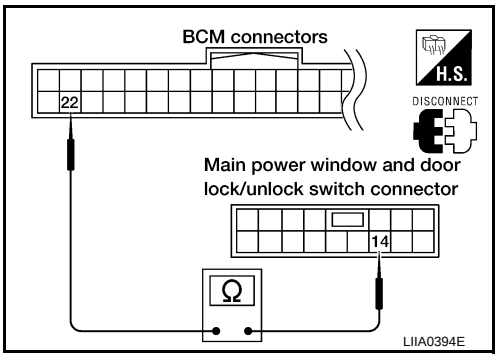

Is the inspection result normal?

YES >> Replace main power window and door lock/unlock switch.
NO >> Repair or replace harness.

PASSENGER SIDE

PASSENGER SIDE : Description

INFOID:0000000001563508

Transmits door lock/unlock operation to BCM.

PASSENGER SIDE : Component Function Check

INFOID:0000000001563509

1. CHECK FUNCTION

With CONSULT-III

Check CDL LOCK SW, CDL UNLOCK SW in Data Monitor mode with CONSULT-III.

Monitor item	Condition	
CDL LOCK SW	LOCK	: ON
	UNLOCK	: OFF
CDL UNLOCK SW	LOCK	: OFF
	UNLOCK	: ON

Is the inspection result normal?

YES >> Door lock and unlock switch is OK.
NO >> Refer to DLK-53, "PASSENGER SIDE : Diagnosis Procedure".

PASSENGER SIDE : Diagnosis Procedure

INFOID:0000000001563510

1. CHECK DOOR LOCK/UNLOCK SWITCH INPUT SIGNAL

With CONSULT-III

Check power window and door lock/unlock switch RH ("CDL LOCK SW", "CDL UNLOCK SW") in DATA MONITOR mode in CONSULT–III.

- When power window and door lock/unlock switch RH is turned to LOCK:

CDL LOCK SW :ON

- When power window and door lock/unlock switch RH is turned to UNLOCK:

CDL UNLOCK SW :ON

Without CONSULT-III

1. Remove key from ignition key cylinder.
2. Using an oscilloscope, check the signal between BCM connector M18 terminal 22 and ground when power window and door lock/unlock switch RH is turned to LOCK or UNLOCK.
3. Make sure the signals which are shown in the figure below can be detected during 10 seconds just after the power window and door lock/unlock switch RH is turned to LOCK or UNLOCK.

Connector	Terminal		Voltage (V)
	(+)	(–)	
M18	22	Ground	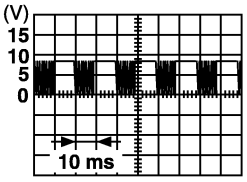 PIIA1297E

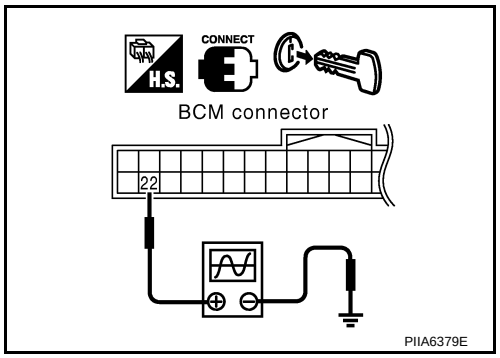

Is the inspection normal?

YES >> Power window and door lock/unlock switch RH circuit is OK.
NO >> GO TO 2.

2. CHECK BCM OUTPUT SIGNAL

Check ("POWER WINDOW DOWN") in ACTIVE TEST mode for "MULTI REMOTE ENT" with CONSULT–II.

When "ACTIVE TEST" is performed, the front windows should be lowered.

Is the inspection normal?

YES >> GO TO 3.
NO >> Replace BCM. Refer to BCS-54, "Removal and Installation".

3. CHECK DOOR LOCK/UNLOCK SWITCH GROUND HARNESS

1. Turn ignition switch OFF.
2. Disconnect power window and door lock/unlock switch RH.

3. Check continuity between power window and door lock/unlock switch RH connector D105 terminal 11 and ground

11 - Ground : Continuity should exist.

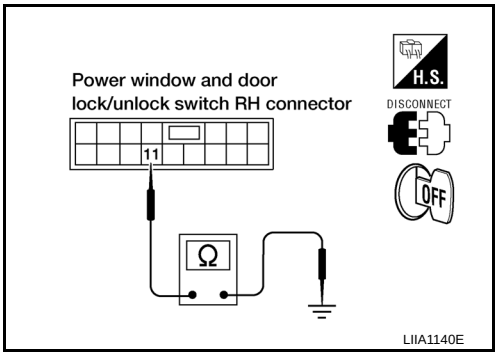

Is the inspection normal?

YES >> GO TO 4.
NO >> Repair or replace harness.

4. CHECK POWER WINDOW SERIAL LINK CIRCUIT

1. Disconnect BCM.
2. Check continuity between BCM connector M18 terminal 22 and power window and door lock/unlock switch RH connector D105 terminal 16.

22 - 16 : Continuity should exist.

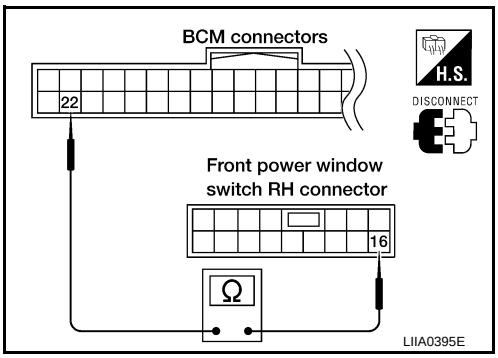

Is the inspection normal?

YES >> Replace power window and door lock/unlock switch RH.
NO >> Repair or replace harness.

KEY CYLINDER SWITCH

Description

INFOID:0000000001563511

The main power window and door lock/unlock switch detects condition of the door key cylinder switch and transmits to BCM as the LOCK or UNLOCK signal.

Component Function Check

INFOID:0000000001563512

1. CHECK DOOR KEY CYLINDER SWITCH INPUT SIGNAL

Check "KEY CYL LK-SW" AND "KEY CYL UN-SW" in DATA MONITOR mode for “POWER DOOR LOCK SYSTEM” with CONSULT-III.

Monitor item	Condition	
KEY CYL LK-SW	Lock	: ON
	Neutral / Unlock	: OFF
KEY CYL UN-SW	Unlock	: ON
	Neutral / Lock	: OFF

Is the inspection result normal?

YES >> Key cylinder switch is OK.
NO >> Refer to DLK-55, "Diagnosis Procedure".

Diagnosis Procedure

INFOID:0000000001563513

1. CHECK DOOR KEY CYLINDER SWITCH LH

With CONSULT-III
Check front door lock assembly LH (key cylinder switch) ("KEY CYL LK-SW") and ("KEY CYL UN-SW) in DATA MONITOR mode with CONSULT–III.

- When key inserted in left front key cylinder is turned to LOCK:

KEY CYL LK-SW : ON

- When key inserted in left front key cylinder is turned to UNLOCK:

KEY CYL UN-SW : ON

Without CONSULT-III
Check voltage between main power window and door lock/unlock switch connector D7 terminals 4, 6 and ground.

Connector	Terminals (+)	Terminals (–)	Condition of left front key cylinder	Voltage (V) (Approx.)
D7	4	Ground	Neutral/Unlock	5
			Lock	0
	6		Neutral/Lock	5
			Unlock	0

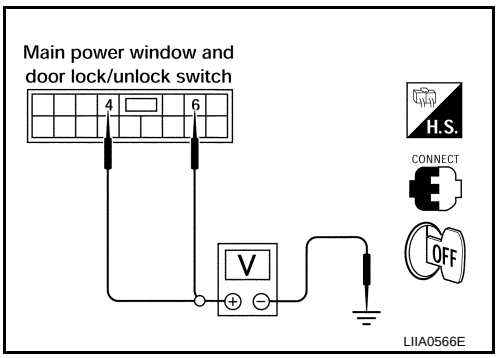

Is the inspection result normal?

YES >> Key cylinder switch signal is OK.
NO >> GO TO 2.

2. CHECK DOOR KEY CYLINDER SWITCH LH GROUND HARNESS

1. Turn ignition switch OFF.
2. Disconnect front door lock assembly LH (key cylinder switch).

3. Check continuity between front door lock assembly LH (key cylinder switch) connector (A) D14 terminal 4 and body ground.

Connector	Terminals	Continuity
D14	4 – Ground	Yes

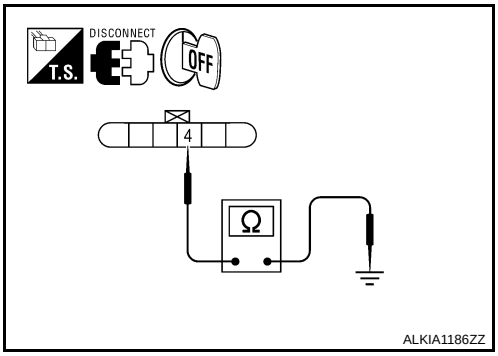

Is the inspection result normal?

YES >> GO TO 3.
NO >> Repair or replace harness.

3. CHECK DOOR KEY CYLINDER SWITCH LH

Check continuity between front door lock assembly LH (key cylinder switch) terminals.

Terminals	Condition	Continuity
3 – 4	Key is turned to LOCK or neutral.	No
	Key is turned to UNLOCK.	Yes
4 – 5	Key is turned to UNLOCK or neutral.	No
	Key is turned to LOCK.	Yes

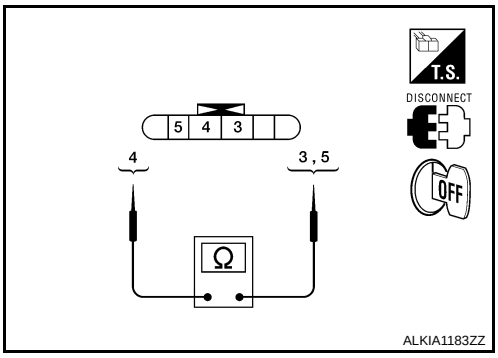

Is the inspection result normal?

YES >> GO TO 4.
NO >> Replace front door lock assembly LH (key cylinder switch). Refer to DLK-190, "Removal and Installation".

4. CHECK DOOR KEY CYLINDER HARNESS

Check continuity between main power window and door lock/unlock switch connector (A) D7 terminals 4, 6 and front door lock assembly LH (key cylinder switch) connector (B) D14 terminals 3, 5 and body ground.

Connector	Terminals	Connector	Terminals	Continuity
A: Main power window and door lock/unlock switch	4	B: Front door lock assembly LH (key cylinder switch)	5	Yes
	6		3	Yes
	4, 6	Ground		No

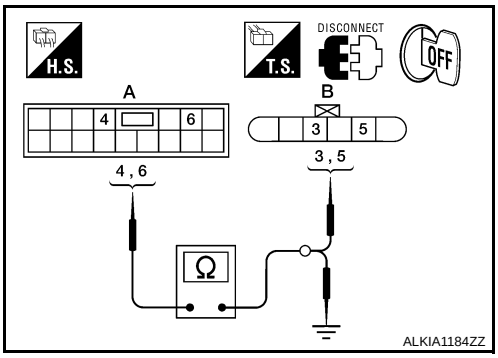

Is the inspection result normal?

YES >> Replace main power window and door lock/unlock switch.
NO >> Repair or replace harness.

FRONT DOOR LOCK ACTUATOR LH (DOOR UNLOCK SENSOR)

Description

INFOID:0000000001563514

Detects door lock condition of driver door.

Component Function Check

INFOID:0000000001563515

1. CHECK FUNCTION

With CONSULT-III

Check door unlock sensor in DATA MONITOR mode.

Monitor item	Condition
DOOR STAT SW (DR DOOR STATE)	Front door lock (driver side) LOCK : OFF
	Front door lock (driver side) UNLOCK : ON

Is the inspection result normal?

YES >> Door unlock sensor is OK.
NO >> Refer to DLK-57, "Diagnosis Procedure".

Diagnosis Procedure

INFOID:0000000001563516

1. CHECK UNLOCK SENSOR POWER SUPPLY

Check voltage between Intelligent Key unit connector terminal 28 and ground.

Connector	Terminals (+)	Terminals (-)	Condition	Voltage (V) (Approx.)
M164	28	Ground	Driver side door lock is locked	5
			Driver side door lock is unlocked	0

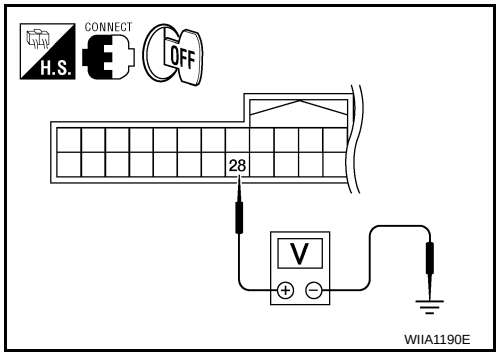

Is the inspection result normal?

YES >> Front door lock assembly LH (door unlock sensor) is OK.
NO >> GO TO 2.

2. CHECK UNLOCK SENSOR CIRCUIT

1. Turn ignition switch OFF.
2. Disconnect Intelligent Key unit and front door lock assembly LH (door unlock sensor) connector.
3. Check continuity between Intelligent Key unit harness connector (A) M164 terminal 28 and front door lock assembly LH (door unlock sensor) harness connector (B) D14 terminal 6.

28 – 6 : Continuity should exist.

4. Check continuity between Intelligent Key unit harness connector (A) M164 terminal 28 and ground.

28 – Ground : Continuity should not exist.

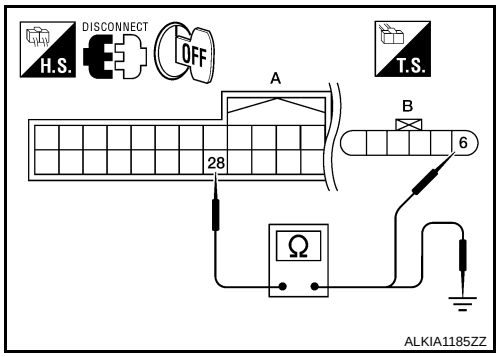

Is the inspection result normal?

YES >> GO TO 3.
NO >> Repair or replace harness between Intelligent Key unit and front door lock assembly LH (door unlock sensor).

3. CHECK UNLOCK SENSOR GROUND CIRCUIT

Check continuity between front door lock assembly LH (door unlock sensor) harness connector D14 terminal 4 and ground.

4 – Ground : Continuity should exist.

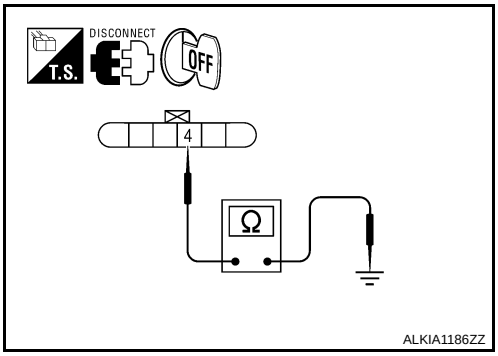

Is the inspection result normal?

YES >> GO TO 4.
NO >> Repair or replace harness.

4. CHECK INTELLIGENT KEY UNIT OUTPUT SIGNAL

1. Connect Intelligent Key unit harness connector.
2. Check voltage between Intelligent Key unit harness connector M164 terminal 28 and ground.

28 – Ground : Approx. 5V

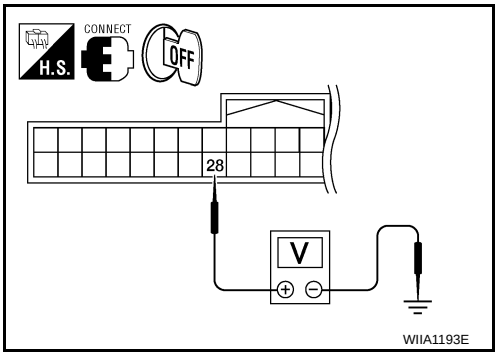

Is the inspection result normal?

YES >> Refer to DLK-58, "Component Inspection".
NO >> Replace Intelligent Key unit. Refer to SEC-95, "Removal and Installation".

Component Inspection

INFOID:0000000001563517

1. CHECK DOOR UNLOCK SENSOR

Check door unlock sensor.

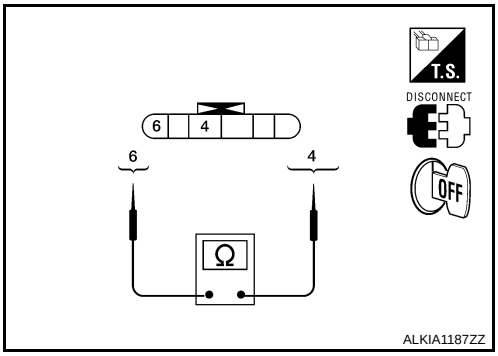

Terminal		Front door lock assembly LH condition	Continuity
Front door lock assembly LH			
4	6	Unlock	Yes
		Lock	No

Is the inspection result normal?

YES >> INSPECTION END.
NO >> Replace front lock assembly LH (door unlock sensor). Refer to DLK-190, "Removal and Installation".

DOOR REQUEST SWITCH

FRONT DOOR REQUEST SWITCH

FRONT DOOR REQUEST SWITCH : Description

INFOID:0000000001563518

Transmits lock/unlock operation to Intelligent Key unit.

FRONT DOOR REQUEST SWITCH : Component Function Check

INFOID:0000000001563519

1.CHECK FUNCTION

With CONSULT-III

Check door request switch "DR REQ SW" and "AS REQ SW" in DATA MONITOR mode.

Monitor item	Condition
DR REQ SW AS REQ SW	Door request switch is pressed : ON
	Door request switch is released : OFF

Is the inspection result normal?

YES >> Door request switch is OK.
NO >> Refer to DLK-59, "FRONT DOOR REQUEST SWITCH : Diagnosis Procedure".

FRONT DOOR REQUEST SWITCH : Diagnosis Procedure

INFOID:0000000001563520

1.CHECK FRONT DOOR REQUEST SWITCH

With CONSULT-III

Check front door request switch (“DR REQ SW” or “AS REQ SW”) in “DATA MONITOR” mode.

Monitor item	Condition
DR REQ SW AS REQ SW	Front door request switch is pressed: ON
	Front door request switch is released: OFF

Without CONSULT-III

1. Turn ignition switch OFF.
2. Check voltage between Intelligent Key unit harness connector M70 terminals 5, 25 and ground.

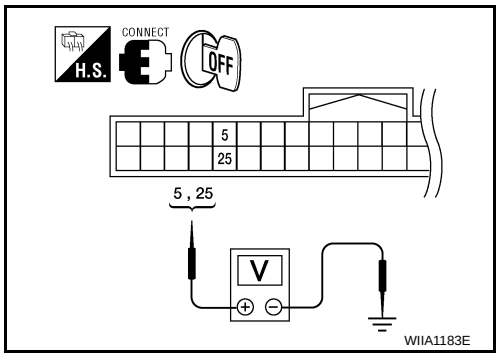

Connector	Item	Terminals (+)	Terminals (–)	Condition	Voltage (V) (Approx.)
M70	Front door request switch LH	5	Ground	Door request switch is pressed ↓ Door request switch is released	0 ↓ Battery voltage
	Front door request switch RH	25			

Is the inspection result normal?

YES >> Front door request switch is OK.
NO >> GO TO 2.

2.CHECK FRONT DOOR REQUEST SWITCH CIRCUIT

1. Turn ignition switch OFF.
2. Disconnect Intelligent Key unit and front door request switch connectors.
3. Check continuity between Intelligent Key unit harness connector (A) M70 terminals 5 (driver door), 25 (passenger door) and front door request switch harness connector (B) D16 (LH), D116 (RH) terminal 2.

Driver side 5 - 2 : Continuity should exist.
Passenger side 25 - 2 : Continuity should exist.

4. Check continuity between Intelligent Key unit harness connector (A) M70 terminals 5 (driver door), 25 (passenger door) and ground.

5 - Ground : Continuity should not exist.
25 - Ground : Continuity should not exist.

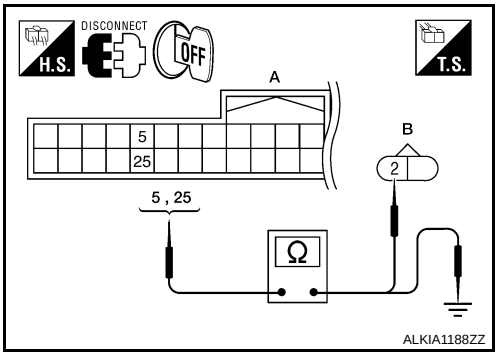

Is the inspection result normal?

YES >> GO TO 3.
NO >> Repair or replace harness between Intelligent Key unit and front door request switch.

3. CHECK FRONT DOOR REQUEST SWITCH GROUND CIRCUIT

Check continuity between front door request switch harness connector D16 (driver door), D116 (passenger door) terminal 1 and ground.

1 - Ground : Continuity should exist.

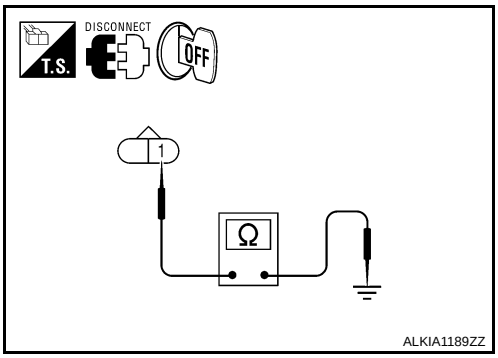

Is the inspection result normal?

YES >> GO TO 4.
NO >> Repair or replace door request switch ground circuit.

4. CHECK FRONT DOOR REQUEST SWITCH OPERATION

Refer to DLK-60, "FRONT DOOR REQUEST SWITCH : Component Inspection".

Is the inspection result normal?

YES >> GO TO 5.
NO >> Replace front door request switch.

5. CHECK FRONT DOOR REQUEST SWITCH SIGNAL

1. Connect Intelligent Key unit connector.
2. Check voltage between Intelligent Key unit harness connector M70 terminals 5, 25 and ground.

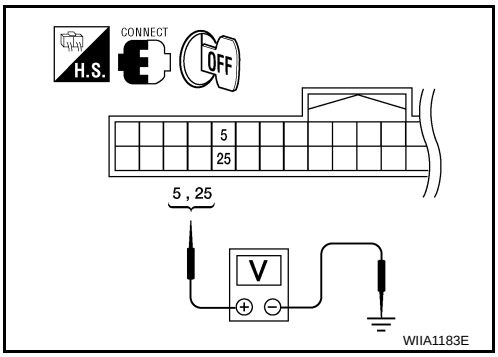

Connector	Item	Terminals (+)	Terminals (–)	Condition	Voltage (V) (Approx.)
M70	Front door request switch LH	5	Ground	Door request switch is pressed ↓ Door request switch is released	0 ↓ Battery voltage
	Front door request switch RH	25			

Is the inspection result normal?

YES >> Refer to Intermittent Incident.
NO >> Replace Intelligent Key unit. Refer to SEC-95, "Removal and Installation".

FRONT DOOR REQUEST SWITCH : Component Inspection

INFOID:0000000001563521

1. CHECK FRONT DOOR REQUEST SWITCH OPERATION

1. Turn ignition switch OFF.

2. Disconnect front door request switch connector.
3. Check continuity between front door request switch terminals 1 and 2.

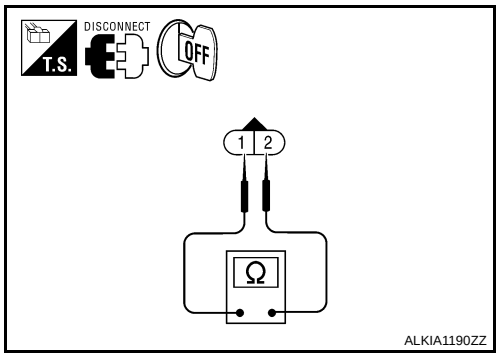

Component	Terminals		Condition	Continuity
Front door request switch (LH or RH)	1	2	Front door request switch is pressed	Yes
			Front door request switch is released	No

Is the inspection result normal?

YES >> Inspection end.
NO >> Replace front door request switch.

BACK DOOR REQUEST SWITCH

BACK DOOR REQUEST SWITCH : Description

INFOID:0000000001723060

Transmits lock/unlock operation to Intelligent Key unit.

BACK DOOR REQUEST SWITCH : Component Function Check

INFOID:0000000001723061

1. CHECK FUNCTION

With CONSULT-III
Check door request switch "BD/TR REQ SW" in DATA MONITOR mode.

Monitor item	Condition
BD/TR REQ SW	Back door request switch is pressed : ON
	Back door request switch is released : OFF

Is the inspection result normal?

YES >> Back door request switch is OK.
NO >> Refer to DLK-61, "BACK DOOR REQUEST SWITCH : Diagnosis Procedure".

BACK DOOR REQUEST SWITCH : Diagnosis Procedure

INFOID:0000000001723062

1. CHECK BACK DOOR REQUEST SWITCH

With CONSULT-III
Check back door request switch “BD/TR REQ SW” in “DATA MONITOR” mode.

Monitor item	Condition
BD/TR REQ SW	Back door request switch is pressed: ON
	Back door request switch is released: OFF

Without CONSULT-III
1. Turn ignition switch OFF.
2. Check voltage between Intelligent Key unit harness connector M164 terminal 29 and ground.

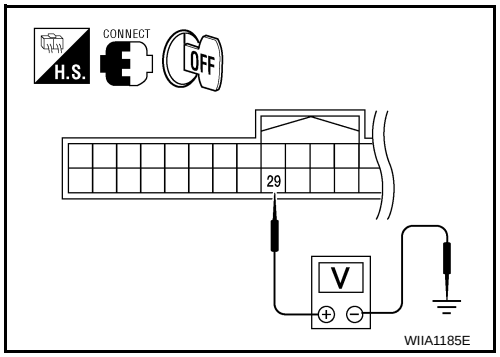

Connector	Item	Terminals		Condition	Voltage (V) (Approx.)
		(+)	(–)		
M164	Back door request switch	29	Ground	Back door request switch is pressed ↓ Back door request switch is released	0 ↓ 5

Is the inspection result normal?

YES >> Back door request switch is OK.
NO >> GO TO 2.

2. CHECK BACK DOOR REQUEST SWITCH CIRCUIT

1. Turn ignition switch OFF.
2. Disconnect Intelligent Key unit and back door request switch connectors.
3. Check continuity between Intelligent Key unit harness connector (A) M164 terminal 29 and back door request switch harness connector (B) D552 terminal 1.

29 - 1 : Continuity should exist.

4. Check continuity between Intelligent Key unit harness connector (A) M164 terminal 29 and ground.

29 - Ground : Continuity should not exist.

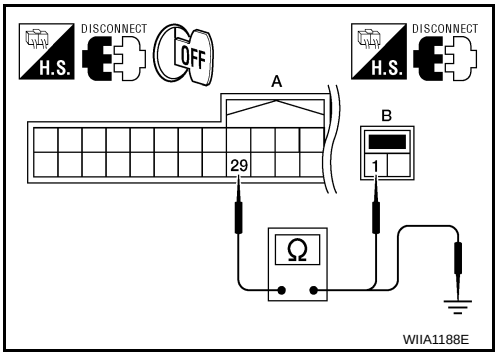

Is the inspection result normal?

YES >> GO TO 3.
NO >> Repair or replace harness between Intelligent Key unit and back door request switch.

3. CHECK BACK DOOR REQUEST SWITCH GROUND CIRCUIT

Check continuity between back door request switch harness connector D552 terminal 2 and ground.

2 - Ground : Continuity should exist.

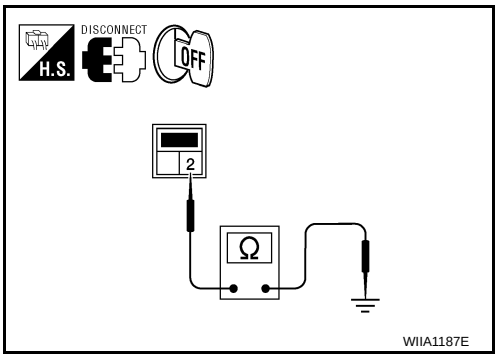

Is the inspection result normal?

YES >> GO TO 4.
NO >> Repair or replace back door request switch ground circuit.

4. CHECK BACK DOOR REQUEST SWITCH OPERATION

Refer to DLK-63, "BACK DOOR REQUEST SWITCH : Component Inspection".

Is the inspection result normal?

YES >> GO TO 5.
NO >> Replace back door request switch.

5. CHECK BACK DOOR REQUEST SWITCH SIGNAL

1. Connect Intelligent Key unit connector.

2. Check voltage between Intelligent Key unit harness connector M164 terminal 29 and ground.

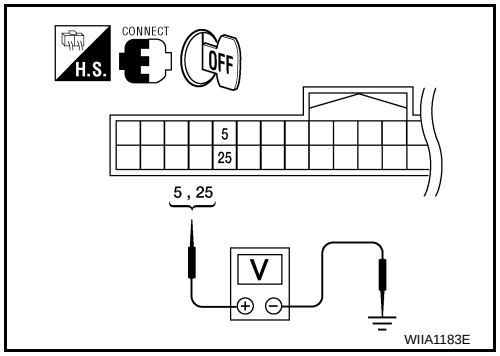

Connector	Item	Terminals		Condition	Voltage (V) (Approx.)
		(+)	(–)		
M164	back door request switch	29	Ground	Back door request switch is pressed ↓ Back door request switch is released	0 ↓ 5

Is the inspection result normal?

YES >> Refer to Intermittent Incident.
NO >> Replace Intelligent Key unit. Refer to SEC-95, "Removal and Installation".

BACK DOOR REQUEST SWITCH : Component Inspection

INFOID:0000000001723063

1. CHECK BACK DOOR REQUEST SWITCH OPERATION

1. Turn ignition switch OFF.
2. Disconnect back door request switch connector.
3. Check continuity between back door request switch terminals 1 and 2.

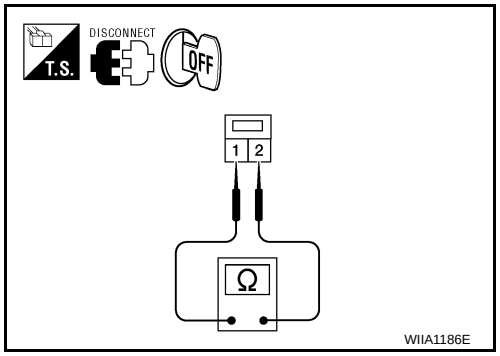

Component	Terminals		Condition	Continuity
Back door request switch	1	2	Back door request switch is pressed	Yes
			Back door request switch is released	No

Is the inspection result normal?

YES >> Inspection end.
NO >> Replace back door request switch.

DOOR LOCK ACTUATOR
DRIVER SIDE

DRIVER SIDE : Description

INFOID:0000000001563522

Locks/unlocks the door with the signal from BCM.

DRIVER SIDE : Component Function Check

INFOID:0000000001563523

1.CHECK FUNCTION

1. Use CONSULT-III to perform Active Test "DOOR LOCK".
2. Touch “ALL LOCK” or “ALL UNLOCK” to check that it works normally.

Is the inspection result normal?

YES >> Door lock actuator is OK.
NO >> Refer to DLK-64, "DRIVER SIDE : Diagnosis Procedure".

DRIVER SIDE : Diagnosis Procedure

INFOID:0000000001563524

1.CHECK DOOR LOCK ACTUATOR SIGNAL

1. Turn ignition switch OFF.
2. Check voltage between BCM connector M20 terminals 59, 65 and ground.

Connector	Terminals (+)	Terminals (-)	Condition	Voltage (V) (Approx.)
M20	59	Ground	Driver door lock/unlock switch is turned to UN-LOCK	0 → Battery voltage
	65		Driver door lock/unlock switch is turned to LOCK	0 → Battery voltage

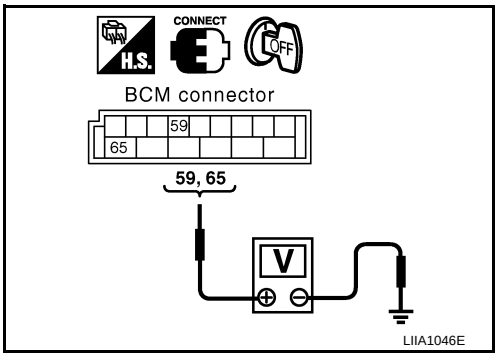

Is the inspection result normal?

YES >> GO TO 2.
NO >> GO TO 3.

2.CHECK DOOR LOCK ACTUATOR HARNESS

1. Disconnect BCM and front door lock assembly LH (actuator).
2. Check continuity between BCM connector (A) M20 terminals 59, 65 and front door lock assembly LH (actuator) connector (B) D14 terminals 1, 2.

Connector	Terminals	Connector	Terminals	Continuity
M20	59	D14	2	Yes
	65		1	

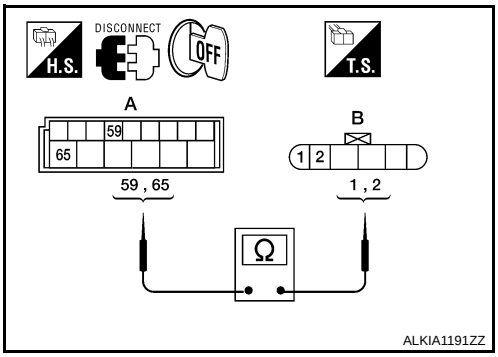

Is the inspection result normal?

YES >> Replace front door lock assembly LH (actuator).
NO >> Repair or replace harness.

3.CHECK DOOR LOCK ACTUATOR HARNESS

1. Disconnect BCM and front door lock assembly LH (actuator).

2. Check continuity between BCM connector M20 terminals 59, 65 and ground.

Connector	Terminals		Continuity
M20	59	Ground	No
	65		

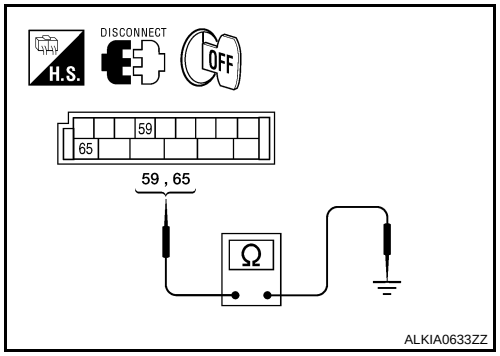

Is the inspection result normal?

YES >> Replace BCM. Refer to BCS-54, "Removal and Installation".
NO >> Repair or replace harness.

PASSENGER SIDE

PASSENGER SIDE : Description

INFOID:0000000001563525

Locks/unlocks the door with the signal from BCM.

PASSENGER SIDE : Component Function Check

INFOID:0000000001563526

1. CHECK FUNCTION

1. Use CONSULT-III to perform Active Test DOOR LOCK.
2. Touch “ALL LOCK” or “ALL UNLOCK” to check that it works normally.

Is the inspection result normal?

YES >> Door lock actuator is OK.
NO >> Refer to DLK-65, "PASSENGER SIDE : Diagnosis Procedure".

PASSENGER SIDE : Diagnosis Procedure

INFOID:0000000001563527

1. CHECK FRONT DOOR LOCK ACTUATOR RH SIGNAL

1. Turn ignition switch OFF.
2. Check voltage between BCM connector M20 terminals 65, 66 and ground.

Connector	Terminals		Condition	Voltage (V) (Approx.)
	(+)	(-)		
M20	65	Ground	Door lock/unlock switch is turned to LOCK	0 → Battery voltage for 300 ms
	66		Door lock/unlock switch is turned to UNLOCK	

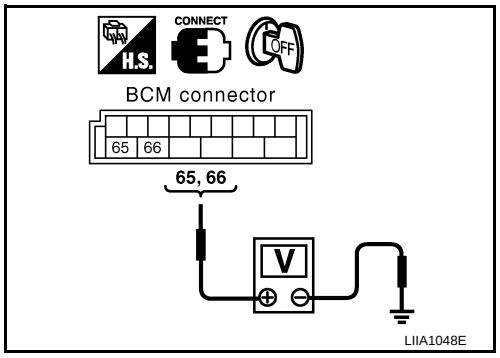

Is the inspection result normal?

YES >> GO TO 2.
NO >> GO TO 3.

2. CHECK DOOR LOCK ACTUATOR HARNESS

1. Disconnect BCM and front door lock actuator RH.

2. Check continuity between BCM connector (A) M20 terminals 65, 66 and front door lock actuator RH (B) D114 terminals 1, 2.

Terminal		Continuity
65	2	Yes
66	1	

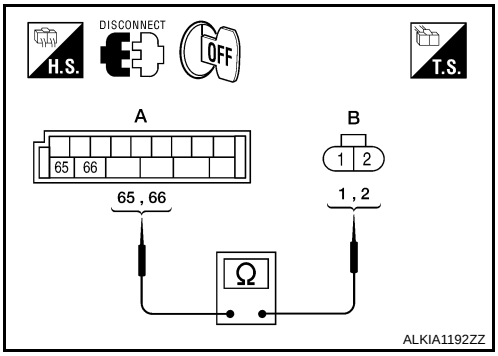

Is the inspection result normal?

YES >> Replace front door lock actuator RH. Refer to DLK-190, "Removal and Installation".
NO >> Repair or replace harness.

3. CHECK DOOR LOCK ACTUATOR HARNESS

1. Disconnect BCM and front door lock actuator RH.
2. Check continuity between BCM connector M19 terminals 65, 66 and ground.

Terminals		Continuity
65	Ground	No
66		

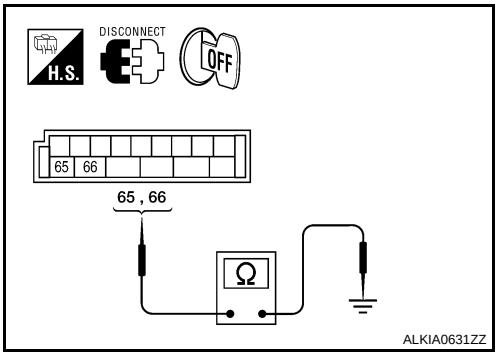

Is the inspection result normal?

YES >> Replace BCM. Refer to BCS-54, "Removal and Installation".
NO >> Repair or replace harness.

REAR LH

REAR LH : Description

INFOID:0000000001563528

Locks/unlocks the door with the signal from BCM.

REAR LH : Component Function Check

INFOID:0000000001563529

1. CHECK FUNCTION

1. Use CONSULT-III to perform Active Test "DOOR LOCK".
2. Touch “ALL LOCK” or “ALL UNLOCK” to check that it works normally.

Is the inspection result normal?

YES >> Door lock actuator is OK.
NO >> Refer to DLK-66, "REAR LH : Diagnosis Procedure".

REAR LH : Diagnosis Procedure

INFOID:0000000001563530

1. CHECK DOOR LOCK ACTUATOR SIGNAL

1. Turn ignition switch OFF.

2. Check voltage between BCM connector M20 terminals 65, 66 and ground.

Connector	Terminals (+)	Terminals (-)	Condition	Voltage (V) (Approx.)
M20	65	Ground	Door lock/unlock switch is turned to LOCK	0 → Battery voltage for 300 ms
	66		Door lock/unlock switch is turned to UNLOCK	

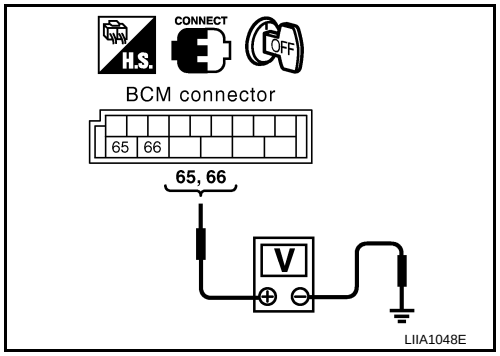

Is the inspection result normal?

YES >> GO TO 2.
NO >> GO TO 3.

2. CHECK DOOR LOCK ACTUATOR HARNESS

NOTE:
The passenger select unlock relay must remain connected during this test.

1. Disconnect BCM and rear door lock actuator LH.
2. Check continuity between BCM connector (A) M20 terminals 65, 66 and rear door lock actuator LH connector (B) D205 terminals 1, 2.

Terminals		Continuity
65	2	Yes
66	1	

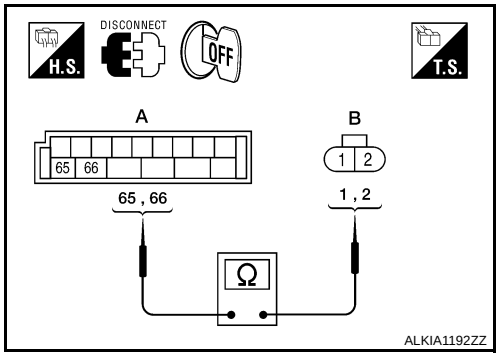

Is the inspection result normal?

YES >> Replace rear door lock actuator LH.
NO >> Repair or replace harness or passenger select unlock relay.

3. CHECK DOOR LOCK ACTUATOR HARNESS

1. Disconnect BCM and each door lock actuator.
2. Check continuity between BCM connector M20 terminals 65, 66 and ground.

Terminals		Continuity
65	Ground	No
66		No

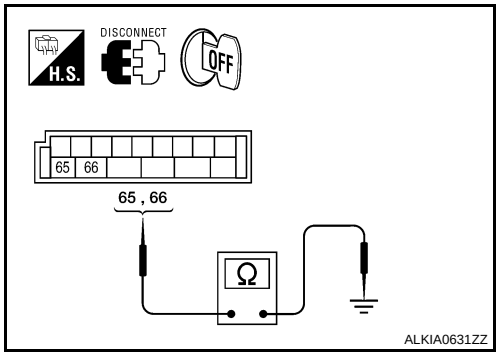

Is the inspection result normal?

YES >> Replace BCM. Refer to BCS-54, "Removal and Installation".
NO >> Repair or replace harness or passenger select unlock relay.

REAR RH

REAR RH : Description

INFOID:0000000001563531

Locks/unlocks the door with the signal from BCM.

REAR RH : Component Function Check

INFOID:0000000001563532

1. CHECK FUNCTION

1. Use CONSULT-III to perform Active Test "DOOR LOCK".
2. Touch “ALL LOCK” or “ALL UNLOCK” to check that it works normally.

Is the inspection result normal?

YES >> Door lock actuator is OK.
NO >> Refer to DLK-68, "REAR RH : Diagnosis Procedure".

REAR RH : Diagnosis Procedure

INFOID:0000000001563533

1. CHECK DOOR LOCK ACTUATOR SIGNAL

1. Turn ignition switch OFF.
2. Check voltage between BCM connector M20 terminals 65, 66 and ground.

Connector	Terminals (+)	Terminals (-)	Condition	Voltage (V) (Approx.)
M20	65	Ground	Door lock/unlock switch is turned to LOCK	0 → Battery voltage for 300 ms
	66		Door lock/unlock switch is turned to UNLOCK	

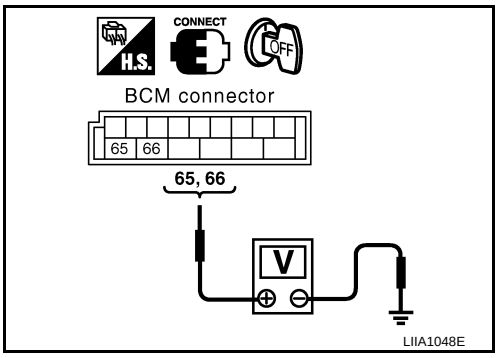

Is the inspection result normal?

YES >> GO TO 2.
NO >> GO TO 3.

2. CHECK DOOR LOCK ACTUATOR HARNESS

NOTE:
The passenger select unlock relay must remain connected during this test.

1. Disconnect BCM and rear door lock actuator RH.
2. Check continuity between BCM connector (A) M20 terminals 65, 66 and rear door lock actuator RH connector (B) D305 terminals 1, 2.

Terminals		Continuity
65	2	Yes
66	1	

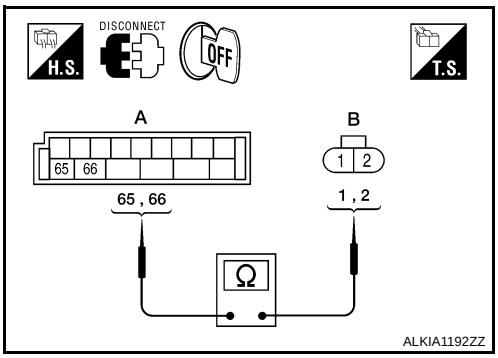

Is the inspection result normal?

YES >> Replace rear door lock actuator RH.
NO >> Repair or replace harness or passenger select unlock relay.

3. CHECK DOOR LOCK ACTUATOR HARNESS

1. Disconnect BCM and rear door lock actuator RH.

2. Check continuity between BCM connector (A) M20 terminals 65, 66 and ground.

Terminals		Continuity
65	Ground	No
66		

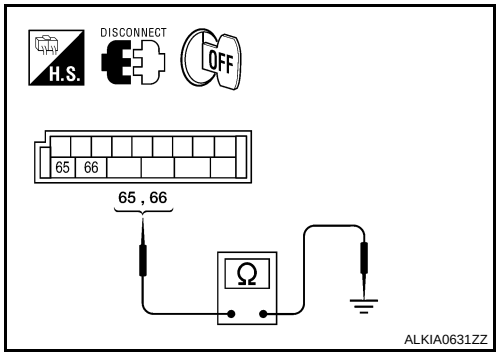

Is the inspection result normal?

YES >> Replace BCM. Refer to BCM REPLACEMENT.
NO >> Repair or replace harness or passenger select unlock relay.

BACK DOOR

BACK DOOR : Description

INFOID:0000000001723093

Locks/unlocks the door with the signal from BCM.

BACK DOOR : Component Function Check

INFOID:0000000001723094

1. CHECK FUNCTION

1. Use CONSULT-III to perform Active Test DOOR LOCK.
2. Touch “ALL LOCK” or “ALL UNLOCK” to check that it works normally.

Is the inspection result normal?

YES >> Door lock actuator is OK.
NO >> Refer to DLK-69, "BACK DOOR : Diagnosis Procedure".

BACK DOOR : Diagnosis Procedure

INFOID:0000000001723095

1. CHECK DOOR LOCK ACTUATOR SIGNAL

1. Turn ignition switch OFF.
2. Check voltage between BCM connector M20 terminals 65, 66 and ground.

Connector	Terminals (+)	Terminals (-)	Condition	Voltage (V) (Approx.)
M20	65	Ground	Door lock/unlock switch is turned to LOCK	0 → Battery voltage for 300 ms
	66		Door lock/unlock switch is turned to UNLOCK	

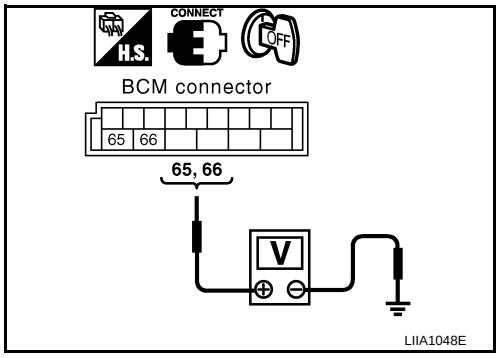

Is the inspection result normal?

YES >> GO TO 2.
NO >> GO TO 3.

2. CHECK DOOR LOCK ACTUATOR HARNESS

1. Disconnect BCM and back door lock actuator.

2. Check continuity between BCM connector (A) M20 terminals 65, 66 and back door lock actuator connector (B) D508 terminals 2, 4.

Terminals		Continuity
65	4	Yes
66	2	

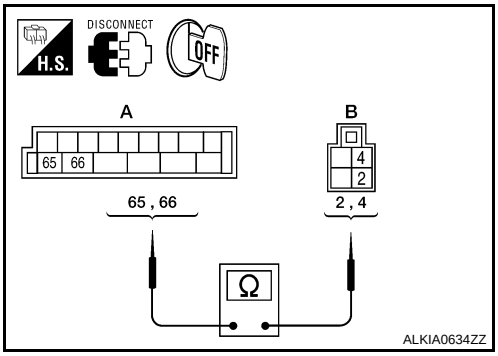

Is the inspection result normal?

YES >> Replace door lock actuator.
NO >> Repair or replace harness.

3. CHECK DOOR LOCK ACTUATOR HARNESS

1. Disconnect BCM and back door lock actuator.
2. Check continuity between BCM connector M20 terminals 65, 66 and ground.

Terminals		Continuity
65	Ground	No
66		

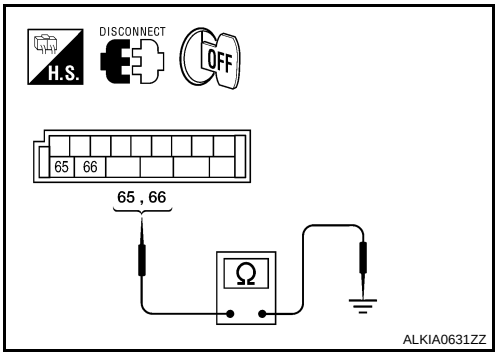

Is the inspection result normal?

YES >> Replace BCM. Refer to BCS-54, "Removal and Installation".
NO >> Repair or replace harness.

PASSENGER SELECT UNLOCK RELAY

Description

INFOID:0000000001563535

Controls the operation of both rear door lock actuators and the back door lock actuator.

Component Function Check

INFOID:0000000001563536

1. CHECK FUNCTION

1. Ensure "SELECTIVE UNLOCK FUNCTION" in WORK SUPPORT is enabled.
2. Use CONSULT-III to perform Active Test "DOOR LOCK".
3. Touch “ALL LOCK” or “ALL UNLOCK” to check that both rear doors and back door work normally.

Is the inspection result normal?

YES >> Passenger select unlock relay is OK.
NO >> Refer to DLK-71, "Component Function Check".

Diagnosis Procedure

INFOID:0000000001563537

1. CHECK PASSENGER SELECT UNLOCK RELAY CIRCUIT

NOTE:
The passenger select unlock relay must remain connected during this step.

1. Turn ignition switch OFF.
2. Disconnect BCM and inoperative back or rear door lock actuator.
3. Check continuity between BCM connector (A) M20 terminal 65 and rear door lock actuator LH connector (B) D205 terminal 2 or rear door lock actuator RH connector (B) D305 Terminal 2 or back door lock actuator (C) D508 terminal 4.

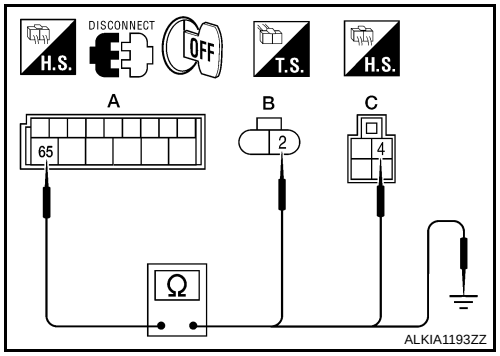

65 - 2 : Continuity should exist.
65 - 4 : Continuity should exist.

4. Check continuity between BCM connector M20 terminals 66 and body ground.

65 - Ground : Continuity should not exist.

Is the inspection result normal?

YES >> GO TO 4.
NO >> GO TO 2.

2. CHECK PASSENGER SELECT UNLOCK RELAY INPUT

1. Disconnect passenger select unlock relay.
2. Check continuity between BCM connector (A) M20 terminal 65 and passenger select unlock relay connector (B) M11 terminal 3.

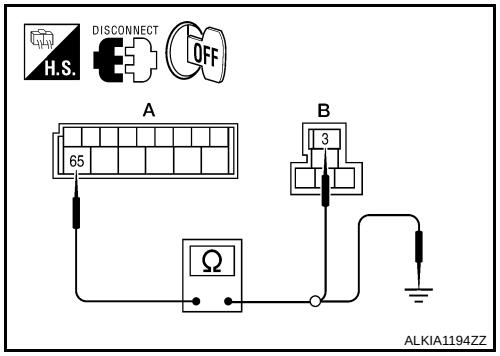

65 - 3 : Continuity should exist.

3. Check continuity between BCM connector (A) M20 terminal 65 and body ground.

65 - Ground : Continuity should not exist.

Is the inspection result normal?

YES >> GO TO 3.
NO >> Repair or replace harness between BCM and relay.

3. CHECK PASSENGER SELECT UNLOCK RELAY OUTPUT

1. Disconnect inoperative rear or back door lock actuator.

2. Check continuity between passenger select unlock relay connector (A) M11 terminal 4 and rear door lock actuator LH connector (B) D205 terminal 2 or rear door lock actuator RH connector (B) D305 terminal 2 or back door lock actuator connector (C) D508 terminal 4.

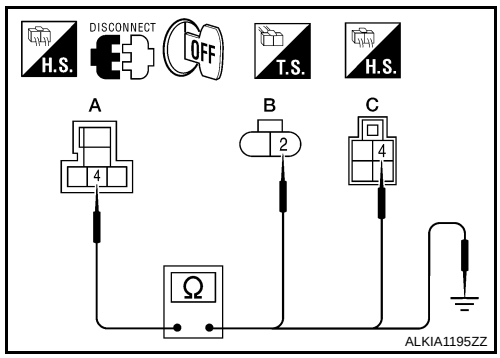

4 - 2 : Continuity should exist.

4 - 4 : Continuity should exist.

3. Check continuity between passenger select unlock relay connector (A) M11 terminal 4 and ground.

4 - Ground : Continuity should not exist.

Is the inspection result normal?

YES >> Replace passenger select unlock relay.
NO >> Repair or replace harness between relay and actuator.

4. CHECK REAR DOOR LOCK ACTUATOR ASSEMBLY

1. Reconnect BCM.
2. Check voltage between rear door lock actuator connector LH (A) D205 terminals 1 and 2 or rear door lock actuator connector RH (A) D305 terminals 1 and 2 or back door lock actuator (B) D508 terminals 2 and 4.

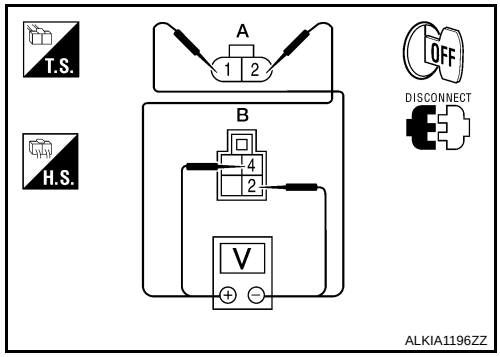

Connector	Terminals		Condition	Voltage (V) (Approx.)
	(+)	(-)		
A: D205 (LH) A: D305 (RH)	2	1	Main power window and door lock/unlock switch is turned to LOCK	0 → Battery voltage for 300 msec.
B: D508	4	2		

3. Check voltage between rear door lock actuator connector LH (A) D205 terminals 1 and 2 or rear door lock actuator connector RH (A) D305 terminals 1 and 2 or back door lock actuator (B) D508 terminals 2 and 4.

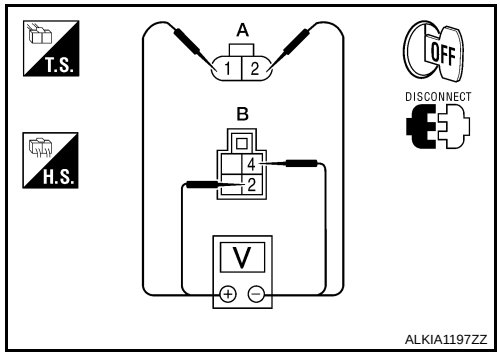

Connector	Terminals		Condition	Voltage (V) (Approx.)
	(+)	(-)		
A: D205 (LH) A: D305 (RH)	1	2	Main power window and door lock/unlock switch is turned to UNLOCK	0 → Battery voltage for 300 msec.
B: D508	2	4		

Is the inspection result normal?

YES >> Replace rear or back door lock actuator.
NO >> Repair or replace harness between actuator and splice.

INTELLIGENT KEY WARNING BUZZER

Description

INFOID:0000000001563538

Answers back and warns for an inappropriate operation.

Component Function Check

INFOID:0000000001563539

1. CHECK FUNCTION

With CONSULT-III

Check Intelligent Key warning buzzer "OUTSIDE BUZZER" in Active Test mode.

Is the inspection result normal?

YES >> Intelligent Key warning buzzer (engine room) is OK.
NO >> Refer to DLK-73, "Diagnosis Procedure".

Diagnosis Procedure

INFOID:0000000001563540

1. CHECK INTELLIGENT KEY WARNING BUZZER (ENGINE ROOM) POWER SUPPLY CIRCUIT

1. Turn ignition switch OFF.
2. Disconnect Intelligent Key warning buzzer (engine room) connector.
3. Check voltage between Intelligent Key warning buzzer (engine room) harness connector E60 terminal 1 and ground.

1 - Ground : Battery voltage

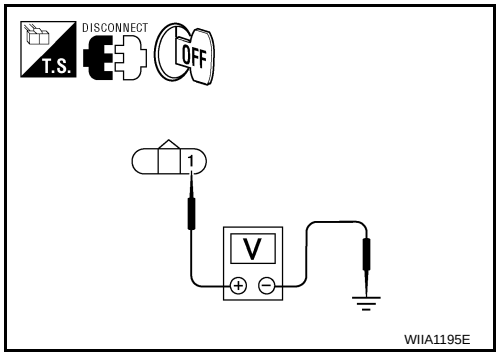

Is the inspection normal?

YES >> GO TO 2.
NO >> Repair or replace Intelligent Key warning buzzer (engine room) power supply circuit.

2. CHECK INTELLIGENT KEY WARNING BUZZER (ENGINE ROOM) CIRCUIT

1. Disconnect Intelligent Key unit connector.
2. Check continuity between Intelligent Key unit harness connector (A) M164 terminal 4 and Intelligent Key warning buzzer (engine room) harness connector E60 terminal 3.

4 - 3 : Continuity should exist.

3. Check continuity between Intelligent Key warning buzzer (engine room) harness connector E60 terminal 3 and ground.

3 - Ground : Continuity should not exist.

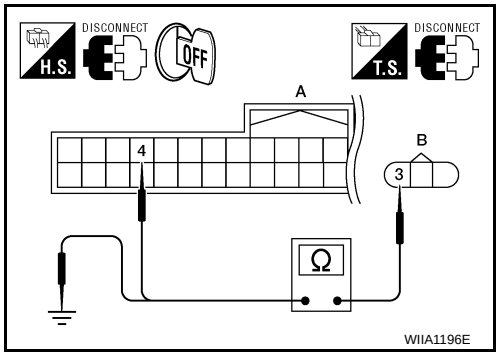

Is the inspection normal?

YES >> GO TO 3.
NO >> Repair or replace harness between Intelligent Key warning buzzer (engine room) and Intelligent Key unit.

3. CHECK INTELLIGENT KEY WARNING BUZZER (ENGINE ROOM) OPERATION

Check DLK-74, "Component Inspection".

>> Inspection end.

Component Inspection

INFOID:0000000001563541

1. CHECK INTELLIGENT KEY WARNING BUZZER

Connect battery power supply to Intelligent Key warning buzzer terminals 1 and 3, and check the operation.

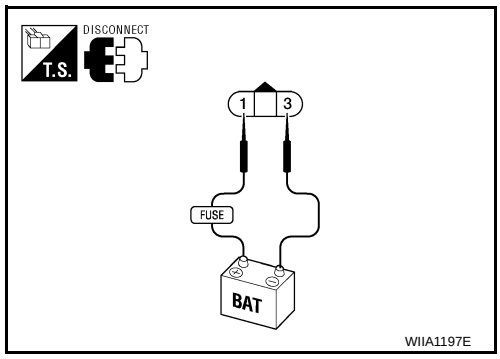

1 (BAT+) - 3 (BAT-) : the buzzer sounds

Is the inspection result normal?

YES >> INSPECTION END.
NO >> Replace Intelligent Key warning buzzer.

INTELLIGENT KEY WARNING CHIME (COMBINATION METER)

Description

INFOID:0000000001726763

Answers back and warns for an inappropriate operation.

Diagnosis Procedure

INFOID:0000000001726764

1. CHECK INTELLIGENT KEY WARNING CHIME (COMBINATION METER) OPERATION

With CONSULT-III

Check Intelligent Key warning buzzer "INSIDE BUZZER" in Active Test mode.

Is the inspection result normal?

YES >> Intelligent Key warning chime (combination meter) is OK.
NO >> Refer to MWI-3, "Work Flow".

WARNING LAMP

KEY (GREEN)

KEY (GREEN) : Description

INFOID:0000000001726767

Illuminates when the ignition knob is pushed with the presence of the Intelligent Key indicating normal operation.

KEY (GREEN) : "KEY" Warning Lamp (GREEN) Check

INFOID:0000000001726773

1. CHECK WARNING LAMP OPERATION

With CONSULT-II
- Check “INDICATOR” in “ACTIVE TEST” mode with CONSULT-III.
- Select “BLUE ON”.

“KEY” warning lamp (green) should illuminate.

Without CONSULT-II
1. Turn ignition switch OFF.
2. Ensure Intelligent Key is in your possession inside the vehicle.
3. While monitoring the combination meter warning lamps, push the ignition knob switch.
4. The "KEY" warning lamp (green) should illuminate indicating that the Intelligent Key is nearby.

OK or NG

OK >> INSPECTION END
NG >> Check combination meter. Refer to MWI-3, "Work Flow".

KEY (RED)

KEY (RED) : Description

INFOID:0000000001726774

Illuminates when the ignition knob is pushed without the presence of the Intelligent Key indicating inappropriate operation.

KEY (RED) : "KEY" Warning Lamp (RED) Check

INFOID:0000000001726775

1. CHECK WARNING LAMP OPERATION

With CONSULT-II
- Check “INDICATOR” in “ACTIVE TEST” mode with CONSULT-II.
- Select “RED ON”.

“KEY” warning lamp (red) should illuminate.

Without CONSULT-II
1. Turn ignition switch OFF.
2. Ensure Intelligent Key is outside and away from the vehicle.
3. While monitoring the combination meter warning lamps, push the ignition knob switch.
4. The "KEY" warning lamp (red) should illuminate indicating that the Intelligent Key is not nearby.

OK or NG

OK >> INSPECTION END
NG >> Check combination meter. Refer to MWI-3, "Work Flow".

WARNING LAMP

WARNING LAMP : Description P-SHIFT

INFOID:0000000001726776

Illuminates when the ignition knob is turned from ON to OFF with the shift lever out-of-park indicating inappropriate operation.

WARNING LAMP : "P-SHIFT" Warning Lamp Check

INFOID:0000000001726777

1. CHECK WARNING LAMP OPERATION

With CONSULT-II

- Check “INDICATOR” in “ACTIVE TEST” mode with CONSULT-II.
- Select “KNOB ON”.

“P-SHIFT” warning lamp should illuminate.

Without CONSULT-II

1. Turn ignition switch OFF.
2. While monitoring the combination meter warning lamps, turn ignition switch ON. "P-SHIFT" warning lamp should illuminate for 1 second to perform a bulb check.

OK or NG

OK >> INSPECTION END
NG >> Check combination meter. Refer to MWI-3, "Work Flow".

OUTSIDE KEY ANTENNA

Description

INFOID:0000000001563542

Detects whether the Intelligent Key is in the operating range of the outside antennas.
Front outside antennas are integrated in front outside door handles (driver side, passenger side) to allow locking and unlocking of door locks when the Intelligent Key is present.
Rear bumper antenna is mounted on the rear bumper and is used to allow locking and unlocking of door locks when the Intelligent Key is present.

Component Function Check

INFOID:0000000001563543

1. CHECK DOOR REQUEST SWITCH

Check that door request switches operate normally.

Is the inspection result normal?

YES >> GO TO 2.
NO >> Inspect door request switches. Refer to DLK-59, "FRONT DOOR REQUEST SWITCH : Component Function Check".

2. CHECK FRONT ANTENNAS FUNCTION

Be sure that Intelligent Key is in each outside key antenna detection range.

Does door lock/unlock when each request switch is pressed?

YES >> Outside key antenna is OK.
NO >> Refer to DLK-78, "Diagnosis Procedure".

Diagnosis Procedure

INFOID:0000000001563544

1. CHECK OUTSIDE KEY ANTENNA INPUT SIGNAL

1. Turn ignition switch OFF.
2. Check signal between Intelligent Key unit connector M164 terminals 17, 19, 37 and ground with an oscilloscope.

Connector	Item	Terminals (+)	Terminals (-)	Condition	Signal (Reference value)
M164	Rear bumper antenna	17	Ground	Request switch is pushed	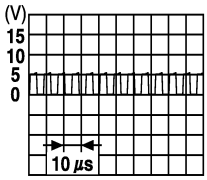 SIIA1910J
	Front outside antenna LH	19			
	Front outside antenna RH	37			

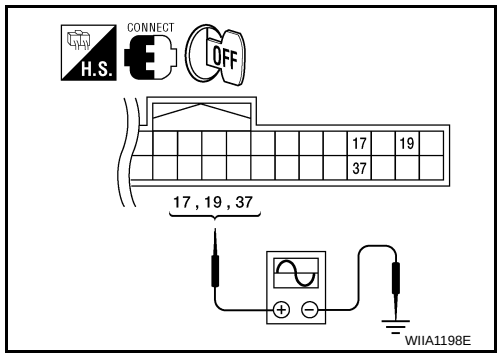

Is the inspection result normal?

YES >> Outside key antenna is OK.
NO >> GO TO 2.

2. CHECK OUTSIDE KEY ANTENNA CIRCUIT

1. Disconnect Intelligent Key unit connector and outside key antenna connector.
2. Check continuity between each outside key antenna harness connector (B) D15 (driver side) or D115 (passenger side), rear bumper antenna connector (C) C127 terminals 1, 2 and Intelligent Key unit harness connector (A) M164 terminals 17, 18, 19, 20, 37, and 38.

Item	Connector	Terminal	Connector	Terminal	Continuity
Rear bumper antenna	C: C127	1	A: M164	17	Yes
		2		18	
Front outside antenna LH	B: D15	2		19	
		1		20	
Front outside antenna RH	B: D115	2		37	
		1		38	

3. Check continuity between each outside key antenna harness connector terminals 1, 2 and ground.

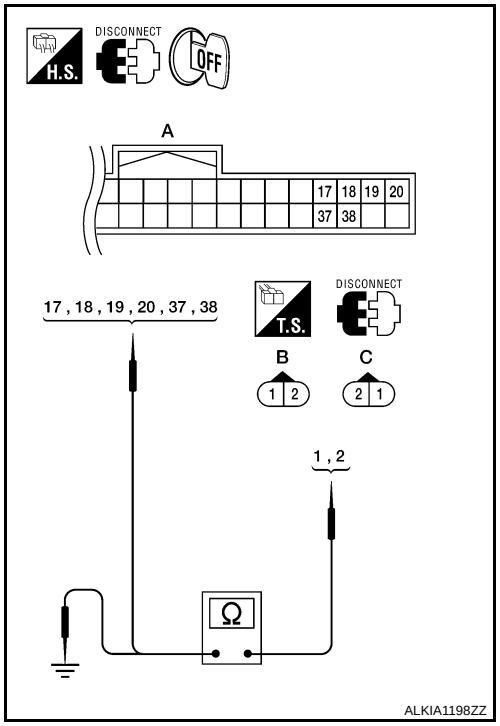

Item	Connector		Terminal	Continuity
Rear bumper antenna	C: C127	1	Ground	No
		2		
Front outside antenna LH	B: D15	1		
		2		
Front outside antenna RH	B: D115	1		
		2		

Is the inspection result normal?

YES >> GO TO 3.
NO >> Repair or replace harness between outside key antenna and Intelligent Key unit.

3. CHECK OUTSIDE KEY ANTENNA POWER SUPPLY

1. Replace outside key antenna. (New antenna or other antenna)
2. Connect Intelligent Key unit connector and outside key antenna connector.
3. Check signal between Intelligent Key unit connector M164 terminals 17, 19, 37 and ground with an oscilloscope.

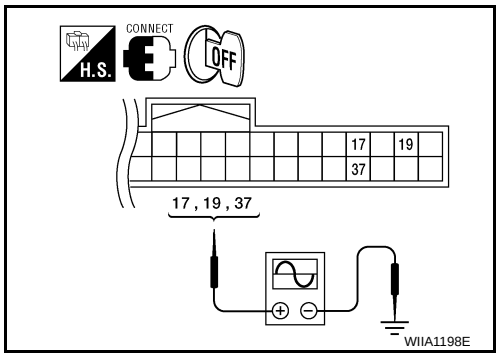

Connector	Item	Terminals (+)	Terminals (-)	Condition	Signal (Reference value)
M164	Rear bumper	17	Ground	Request switch is pushed	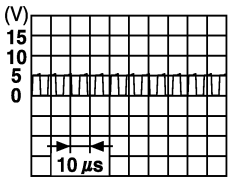 SIIA1910J
	Front outside antenna LH	19			
	Front outside antenna RH	37			

Is the inspection result normal?

YES >> Replace outside key antenna.
NO >> Replace Intelligent Key unit. Refer to SEC-95, "Removal and Installation".

STEERING LOCK SOLENOID

Diagnosis Procedure

INFOID:0000000001563545

1. CHECK STEERING LOCK SOLENOID POWER SUPPLY

1. Turn ignition switch OFF.
2. Disconnect steering lock solenoid connector.
3. Check voltage between steering lock solenoid harness connector M65 terminal 1 and ground.

1 - Ground : Battery voltage

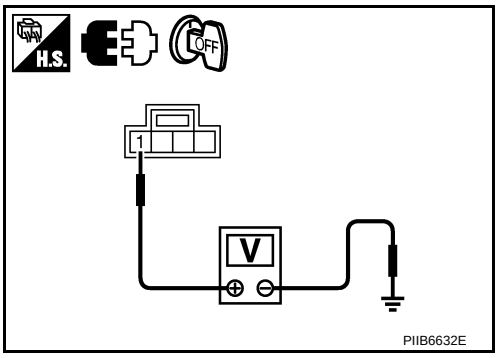

Is the inspection result normal?

YES >> GO TO 2.
NO >> Repair or replace steering lock solenoid power supply circuit.

2. CHECK STEERING LOCK SOLENOID GROUND CIRCUIT

Check continuity between steering lock solenoid harness connector M65 terminal 4 and ground.

4 - Ground : Continuity should exist.

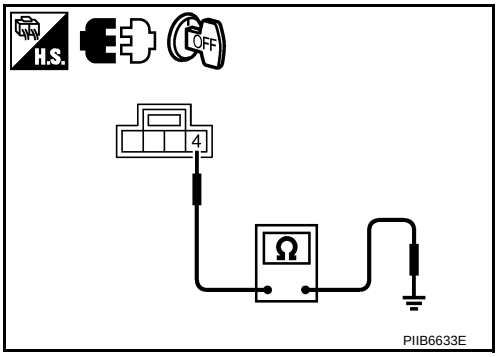

Is the inspection result normal?

YES >> GO TO 3.
NO >> Repair or replace the steering lock solenoid ground circuit.

3. CHECK INTELLIGENT KEY UNIT OUTPUT SIGNAL

1. Connect steering lock solenoid connector.
2. Check voltage between Intelligent Key unit harness connector M164 terminal 1 and ground.

1 - Ground : Approx. 5V

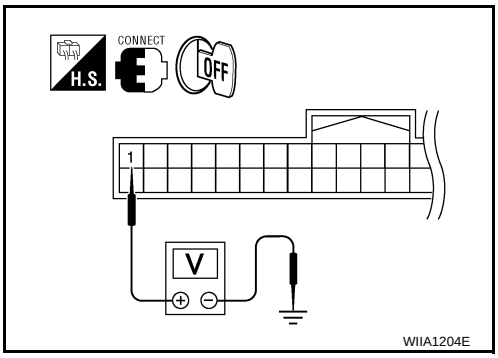

Is the inspection result normal?

YES >> GO TO 4.
NO >> GO TO 6.

4. CHECK STEERING LOCK COMMUNICATION SIGNAL

Check signal between Intelligent Key unit connector M164 terminal 32 and ground with oscilloscope.

Connector	Terminals (+)	Terminals (–)	Condition	Signal (V) (Reference value)
M164	32	Ground	Ignition switch is pushed	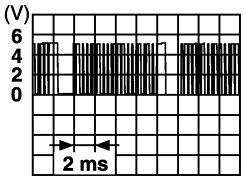

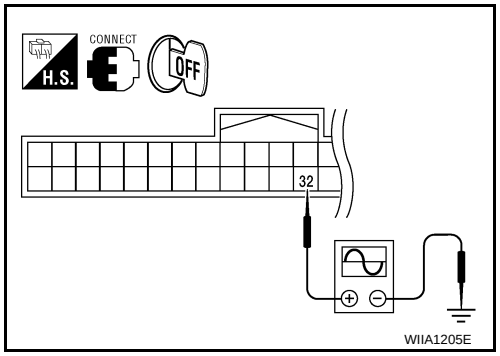

Is the inspection result normal?

YES >> GO TO 5.
NO >> GO TO 6.

5. CHECK STEERING LOCK SOLENOID COMMUNICATION CIRCUIT FOR OPEN

1. Disconnect Intelligent Key unit and steering lock solenoid connectors.
2. Check continuity between Intelligent Key unit harness connector (B) M164 terminals 1, 32 and steering lock solenoid connector (A) M65 terminals 2, 3.

1 - 2 : Continuity should exist.
32 - 3 : Continuity should exist.

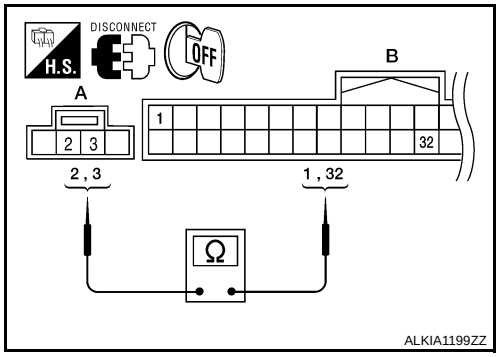

Is the inspection result normal?

YES >> Replace steering lock solenoid.
- After replacing steering lock solenoid, perform registration procedure. Refer to SEC-20, "COMMON ITEM : CONSULT-III Function (BCM - COMMON ITEM)".

NO >> Repair or replace harness between steering lock solenoid and Intelligent Key unit.

6. CHECK STEERING LOCK SOLENOID COMMUNICATION CIRCUIT FOR SHORT

1. Disconnect Intelligent Key unit and steering lock solenoid connectors.
2. Check continuity between steering lock solenoid connector M65 terminals 2, 3 and ground.

2 - Ground : Continuity should not exist.
3 - Ground : Continuity should not exist.

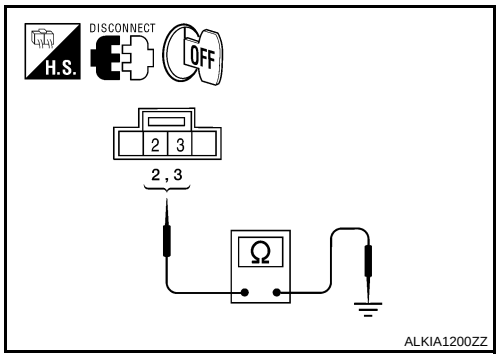

Is the inspection result normal?

YES >> Replace Intelligent Key unit. Refer to SEC-95, "Removal and Installation".

NO >> Repair or replace harness between steering lock solenoid and Intelligent Key unit.

A/T DEVICE (DETENTION SWITCH KEY)

Diagnosis Procedure

INFOID:0000000001563546

1. CHECK A/T DEVICE (DETENTION SWITCH KEY) INPUT SIGNAL

1. Turn ignition switch OFF.
2. While pressing the ignition knob switch, check voltage between Intelligent Key unit harness connector M164 terminal 39 and ground.

Connector	Terminals		Condition	Voltage (V) (Approx.)
	(+)	(-)		
M164	39	Ground	Selector lever is in "P" position	Battery voltage
			Other than above	0

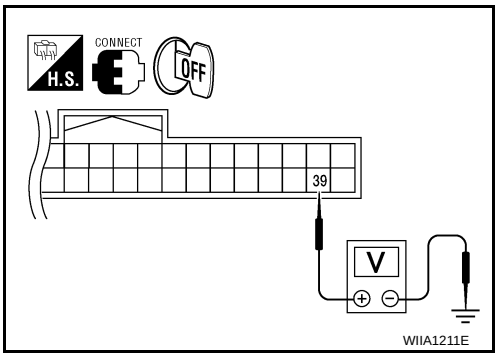

Is the inspection result normal?

YES >> Replace Intelligent Key unit. Refer to SEC-95, "Removal and Installation".
NO >> GO TO 2.

2. CHECK A/T DEVICE (DETENTION SWITCH KEY) POWER SUPPLY CIRCUIT

1. Disconnect A/T device (detention switch key) connector.
2. While pressing the ignition knob switch, check voltage between A/T device (detention switch key) harness connector M156 terminal 4 and ground.

4 – Ground : Battery voltage.

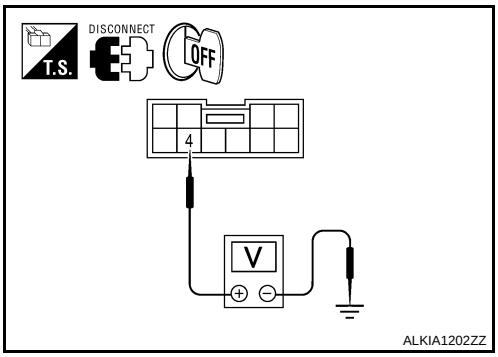

Is the inspection result normal?

YES >> GO TO 3.
NO >> Repair or replace harness or ignition knob switch.

3. CHECK A/T DEVICE (DETENTION SWITCH KEY) GROUND SUPPLY CIRCUIT

Check continuity between A/T device (detention switch key) terminal 2 and ground.

2 – Ground : Continuity should exist.

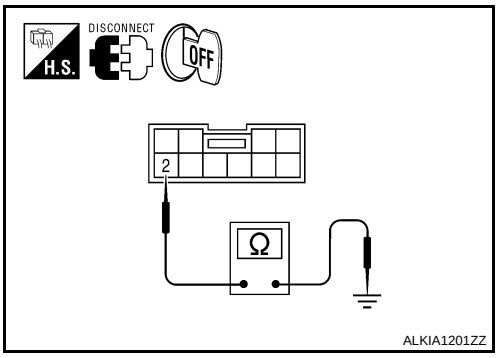

Is the inspection result normal?

YES >> GO TO 4.
NO >> Repair or replace harness.

4. CHECK A/T DEVICE (DETENTION SWITCH KEY)

Check continuity between A/T device (detention switch key) terminals 2 and 4.

Component	Terminals		Condition	Continuity
A/T device (detention switch key)	2	4	Selector lever is in "P" position	Yes
			Other than above	No

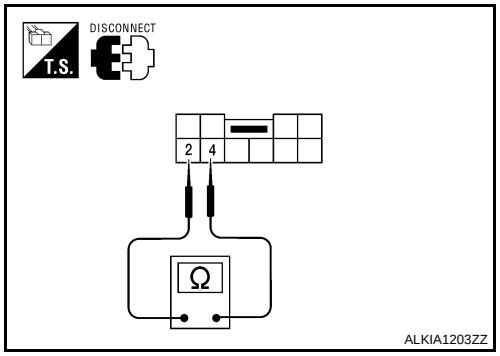

Is the inspection result normal?

YES >> GO TO 5.
NO >> Replace A/T device (detention switch key).

5. CHECK A/T DEVICE (DETENTION SWITCH KEY) CIRCUIT

1. Disconnect Intelligent Key unit connector.
2. Check continuity between Intelligent Key unit harness connector (A) M164 terminal 39 and A/T device (detention switch key) harness connector (B) M156 terminal 4.

39 – 4 : Continuity should exist.

3. Check continuity between Intelligent Key unit harness connector (A) M164 terminal 39 and ground.

39 – Ground : Continuity should not exist.

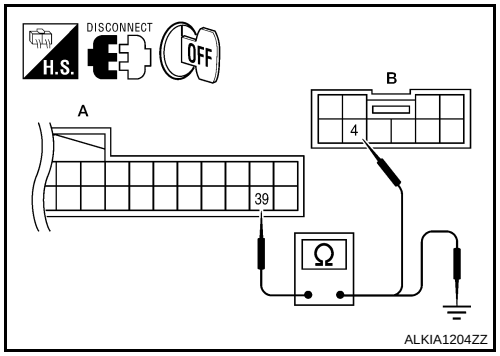

Is the inspection result normal?

YES >> A/T device (detention switch key) circuit is OK.
NO >> Repair or replace harness.

REMOTE KEYLESS ENTRY RECEIVER

Description

INFOID:0000000001563547

Receives Intelligent Key operation and transmits to Intelligent Key unit.

Component Function Check

INFOID:0000000001563548

1. CHECK FUNCTION

With CONSULT-III

Check remote keyless entry receiver "RKE OPE COUN1" in Data Monitor mode with CONSULT-III.

Monitor item	Condition
RKE OPE COUN1	Checks whether value changes when operating Intelligent Key.

Is the inspection result normal?

YES >> Remote keyless entry receiver is OK.
NO >> Refer to DLK-84, "Diagnosis Procedure".

Diagnosis Procedure

INFOID:0000000001563549

1. CHECK REMOTE KEYLESS ENTRY RECEIVER OUTPUT SIGNAL

1. Turn ignition switch OFF.
2. Check remote keyless entry receiver signal with an oscilloscope.

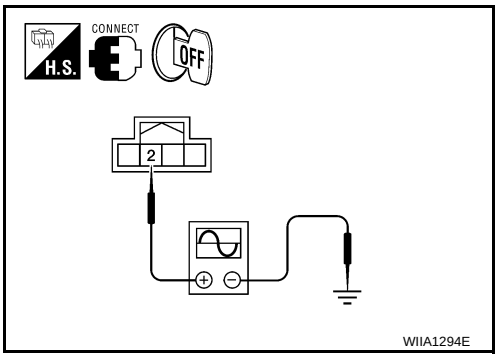

Terminals (+) Remote keyless entry receiver connector	Terminals (+) Terminal	Terminals (–)	Keyfob condition	Signal (Reference value)
M67	2	Ground	No function	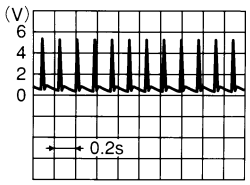
			Any button is pressed	

Is the inspection result normal?

YES >> GO TO 2.
NO >> GO TO 5.

2. REMOTE KEYLESS ENTRY RECEIVER VOLTAGE CIRCUIT INSPECTION

Check voltage between remote keyless entry receiver connector M67 terminal 3 and ground using an oscilloscope.

Terminals			Signal (Reference value)
(+)		(–)	
Remote keyless entry receiver connector	Terminal		
M67	3	Ground	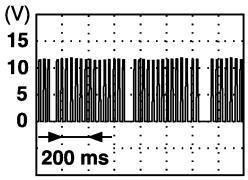 PIIA2344E

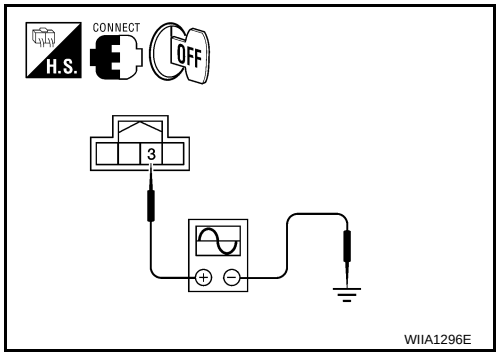

WIIA1296E

Is the inspection result normal?

YES >> GO TO 3.
NO >> GO TO 5.

3. REMOTE KEYLESS ENTRY RECEIVER 5-VOLT CIRCUIT INSPECTION

Check voltage between remote keyless entry receiver connector M67 terminal 4 and ground.

4 - Ground : Approx. 5 volt.

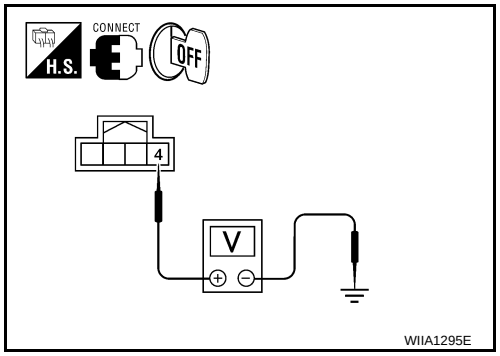

WIIA1295E

Is the inspection result normal?

YES >> GO TO 4.
NO >> GO TO 5.

4. REMOTE KEYLESS ENTRY RECEIVER GROUND CIRCUIT INSPECTION

Check continuity between remote keyless entry receiver connector M67 terminal 1 and ground.

1 - Ground : Continuity should exist.

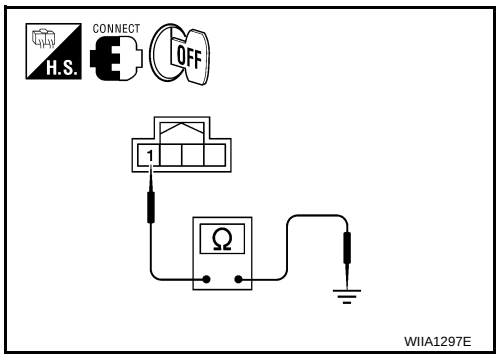

WIIA1297E

Is the inspection result normal?

YES >> Replace remote keyless entry receiver. Refer to SEC-96, "Removal" and SEC-96, "Installation".
NO >> GO TO 5.

5. HARNESS INSPECTION BETWEEN INTELLIGENT KEY UNIT AND RKE RECEIVER

1. Disconnect remote keyless entry receiver and Intelligent Key unit connectors.
2. Check continuity between Intelligent Key unit connector (A) M164 terminals 8, 9, 21, 30 and remote keyless entry receiver connector (B) M67 terminals 1, 2, 3, 4.

1 - 8 : Continuity should exist.
2 - 9 : Continuity should exist.
3 - 21 : Continuity should exist.
4 - 30 : Continuity should exist.

3. Check continuity between remote keyless entry receiver connector (B) M67 terminals 1, 2, 3, 4 and ground.

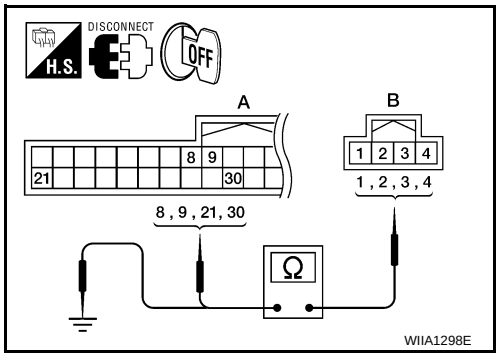

WIIA1298E

1 - Ground	**: Continuity should not exist.**
2 - Ground	**: Continuity should not exist.**
3 - Ground	**: Continuity should not exist.**
4 - Ground	**: Continuity should not exist.**

Is the inspection result normal?

YES >> Remote keyless entry receiver circuits are OK.
NO >> Repair or replace the harness between the remote keyless entry receiver and Intelligent Key unit.

INTELLIGENT KEY BATTERY AND FUNCTION

Description

INFOID:0000000001563550

The following functions are available when having and carrying electronic ID.
- Door lock/unlock
- Back door open

Remote control entry function and panic alarm function are available when operating the remote buttons.

Component Function Check

INFOID:0000000001563551

1.CHECK FUNCTION

With CONSULT-III

Check remote keyless entry receiver "RKE OPE COUN1" in DATA MONITOR mode with CONSULT-III.

Monitor item	Condition
RKE OPE COUN1	Check that the numerical value is changing while operating the Intelligent Key.

Is the inspection result normal?

YES >> Intelligent Key is OK.
NO >> Refer to DLK-87, "Diagnosis Procedure".

Diagnosis Procedure

INFOID:0000000001563552

1.CHECK INTELLIGENT KEY BATTERY

Check by connecting a resistance (approximately 300Ω) so that the current value becomes about 10 mA.

Standard : Approx. 2.5 - 3.0V

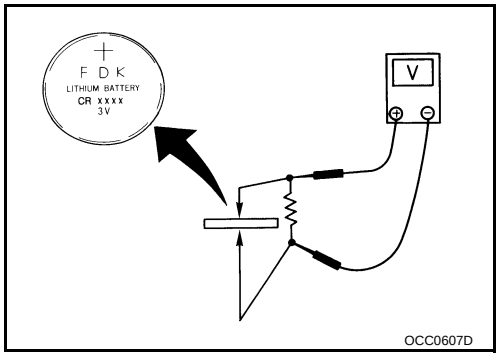

Is the measurement value within specification?

YES >> GO TO 2.
NO >> Replace Intelligent Key battery.

2.CHECK KEYFOB FUNCTION

Check keyfob function using Remote Keyless Entry Tester J-43241.

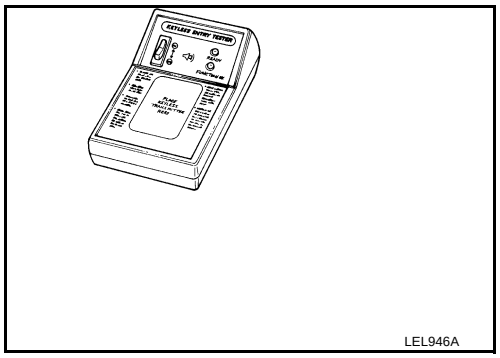

Does the test pass?

YES >> Keyfob is OK.
NO >> Replace keyfob. Refer to CONSULT-III Operation Manual.

Component Inspection

INFOID:0000000001563553

1. REPLACE INTELLIGENT KEY BATTERY

1. Release the lock knob at the back of the Intelligent Key and remove the mechanical key.

2. Insert a flat-blade screwdriver (A) wrapped with a cloth into the slit of the corner and twist it to separate the upper part from the lower part.
   CAUTION:
   - **Do not touch the circuit board or battery terminal.**
   - **The keyfob is water-resistant. However, if it does get wet, immediately wipe it dry.**

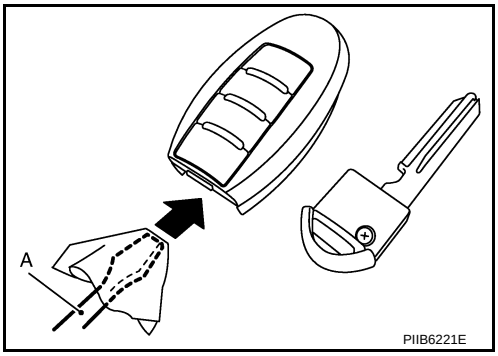

3. Replace the battery with new one.
4. Align the tips of the upper and lower parts, and then push them together until it is securely closed.
   CAUTION:
   - **When replacing battery, keep dirt, grease, and other foreign materials off the electrode contact area.**
5. After replacing the battery, check that all Intelligent Key functions work properly.

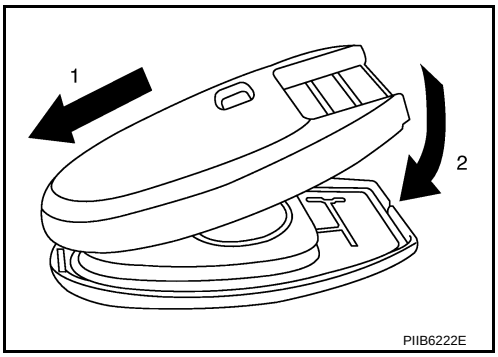

Is the inspection result normal?

YES >> Intelligent Key is OK.
NO >> Check remote keyless entry receiver. Refer to DLK-84, "Component Function Check".

Special Repair Requirement

INFOID:0000000001563554

Refer to CONSULT-III Operation Manual.

HORN FUNCTION

Description

INFOID:0000000001563555

Perform answer-back for each operation with horn.

Component Function Check

INFOID:0000000001563556

1. CHECK FUNCTION

1. Select "HORN" in “ACTIVE TEST” mode with CONSULT-III.
2. Check the horn (high/low) operation.

Test item		Description	
HORN	ON	Horn relay	ON (for 20 ms)

Is the operation normal?

YES >> INSPECTION END.
NO >> Go to DLK-89, "Diagnosis Procedure".

Diagnosis Procedure

INFOID:0000000001563557

1. CHECK HORN FUNCTION

Check horn function with horn switch

Do the horns sound?

YES >> GO TO 2.
NO >> Go to HRN-3, "Wiring Diagram".

2. CHECK HORN RELAY POWER SUPPLY

1. Turn ignition switch ON.
2. Perform “ACTIVE TEST”, "HORN" with CONSULT-III.
3. Using an oscilloscope or analog voltmeter, check voltage between IPDM E/R connector E122 terminal 45 and ground.

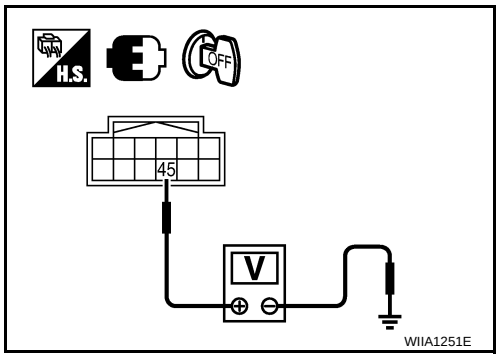

IPDM E/R		Ground	Test item		Voltage (V) (Approx.)
Connector	Terminal				
E122	45	Ground	HORN	OFF → ON → OFF	Battery voltage → 0 → Battery voltage
				Other than above	Battery voltage

Is the inspection result normal?

YES >> GO TO 4.
NO >> GO TO 3.

3. CHECK HORN RELAY CIRCUIT

1. Turn ignition switch OFF.
2. Disconnect IPDM E/R and horn relay connector.

3. Check continuity between IPDM E/R harness connector and horn relay harness connector.

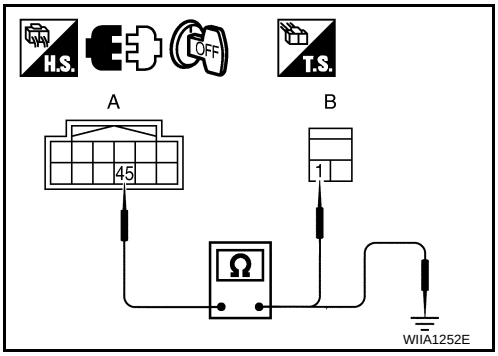

IPDM E/R		Horn relay		Continuity
Connector	Terminal	Connector	Terminal	
A: E122	45	B: H-1	1	Yes

4. Check continuity between IPDM E/R harness connector and ground.

IPDM E/R		Ground	Continuity
Connector	Terminal		
E122	45	Ground	No

Is the inspection result normal?

YES >> GO TO 4.
NO >> Repair or replace harness.

4. CHECK INTERMITTENT INCIDENT

Refer to GI-51, "Intermittent Incident".

Is the inspection result normal?

YES >> Replace IPDM E/R. Refer to PCS-30, "Removal and Installation of IPDM E/R".
NO >> Repair or replace the malfunctioning part.

COMBINATION METER DISPLAY FUNCTION

Description

INFOID:0000000001563558

Displays each operation method guide and warning for system malfunction.

Component Function Check

INFOID:0000000001563559

1.CHECK FUNCTION

1. Turn ignition switch ON.
2. Using Consult-III, activate "P-SHIFT" and "KEY" warning lamp indicators in "ACTIVE TEST" mode.

Do the warning lamps illuminate?

YES >> Combination meter warning lamp indicators are OK.
NO >> Refer to DLK-91, "Diagnosis Procedure".

Diagnosis Procedure

INFOID:0000000001563560

1.CHECK COMBINATION METER

Refer to DLK-128, "DTC Index".

Is the inspection result normal?

YES >> GO TO 2.
NO >> Check combination meter. Refer to DLK-91, "Diagnosis Procedure".

2.CHECK INTERMITTENT INCIDENT

Refer to GI-51, "Intermittent Incident".

>> INSPECTION END.

WARNING CHIME FUNCTION

Description

INFOID:0000000001563561

Performs operation method guide and warning with buzzer.

Component Function Check

INFOID:0000000001563562

1.CHECK FUNCTION

With CONSULT-III

1. Check the operation with "INSIDE BUZZER" in the Active Test.
2. Touch “TAKE OUT”, “KNOB”or “KEY” on screen.

Is the inspection result normal?

Yes >> Warning buzzer into combination meter is OK.
No >> Refer to DLK-92, "Diagnosis Procedure".

Diagnosis Procedure

INFOID:0000000001563563

1.CHECK METER BUZZER CIRCUIT

The inoperative warning chime is contained inside the combination meter. Replace combination meter.

>> Inspection end.

HAZARD FUNCTION

Description

INFOID:0000000001563564

Perform answer-back for each operation with number of blinks.

Component Function Check

INFOID:0000000001563565

1.CHECK FUNCTION

Check hazard warning lamp "FLASHER" in ACTIVE TEST mode.

Is the inspection result normal?

YES >> Hazard warning lamp circuit is OK.
NO >> Refer to DLK-93, "Diagnosis Procedure".

Diagnosis Procedure

INFOID:0000000001563566

1.CHECK HAZARD SWITCH CIRCUIT

Operate the hazard lights by turning ON the hazard warning switch.

Do the lights operate normally?

YES >> Replace the BCM. Refer to BCS for replacement and configuration procedure.
NO >> Repair or replace hazard warning switch circuit. Refer to EXL-66, "Wiring Diagram".

KEY SWITCH (INTELLIGENT KEY UNIT INPUT)

Diagnosis Procedure

INFOID:0000000001563567

1. CHECK KEY SWITCH

With CONSULT-III

Check key switch ("KEY SW") in "DATA MONITOR" mode with CONSULT-III.

Monitor item	Condition
KEY SW	Insert mechanical key into ignition switch: ON
	Remove mechanical key from ignition switch: OFF

Without CONSULT-III

1. Turn ignition switch OFF.
2. Disconnect Intelligent Key unit harness connector.
3. Check voltage between Intelligent Key unit harness connector M164 terminal 7 and ground.

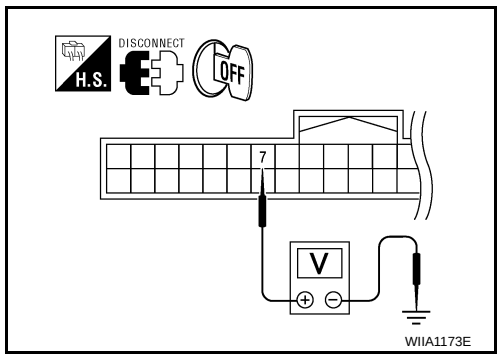

Connector	Terminals		Condition	Voltage (V) (Approx.)
	(+)	(–)		
M164	7	Ground	Insert mechanical key into ignition switch	Battery voltage
			Remove mechanical key from ignition switch	0

Is the inspection result normal?

YES >> Key switch is OK.
NO >> GO TO 2.

2. CHECK KEY SWITCH POWER SUPPLY CIRCUIT

1. Remove mechanical key from ignition switch.
2. Disconnect key switch and ignition knob switch connector.
3. Check voltage between key switch and ignition knob switch harness connector M66 terminal 3 and ground.

3 - Ground : Battery voltage

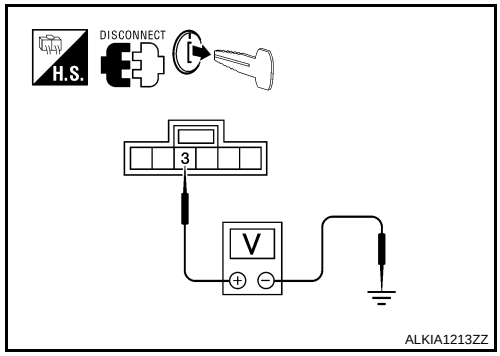

Is the inspection result normal?

YES >> GO TO 3.
NO >> Repair or replace key switch and ignition knob switch power supply circuit.

3. CHECK KEY SWITCH OPERATION

Check continuity between key switch and ignition knob switch terminals 3 and 4.

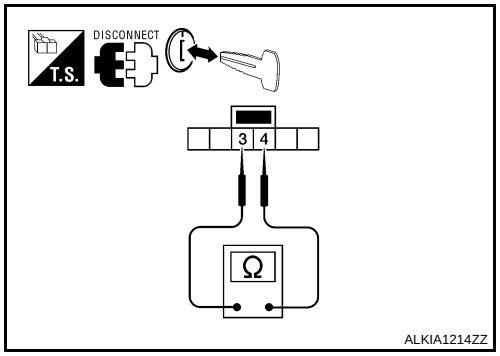

Component	Terminals		Condition	Continuity
Key switch	3	4	Insert mechanical key into ignition switch.	Yes
			Remove mechanical key from ignition switch.	No

Is the inspection result normal?

YES >> GO TO 4.
NO >> Replace key cylinder assembly (built-in key switch).

4. CHECK KEY SWITCH CIRCUIT

1. Check continuity between Intelligent Key unit harness connector (A) M164 terminal 7 and key switch and ignition knob switch harness connector (B) M66 terminal 4.

7 - 4 : Continuity should exist.

2. Check continuity between Intelligent Key unit harness connector (A) M164 terminal 7 and ground.

7 - Ground : Continuity should not exist.

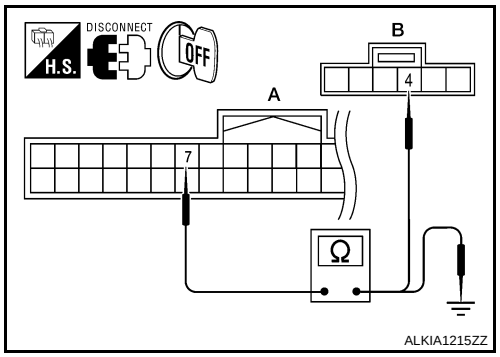

Is the inspection result normal?

YES >> Check the condition of harness and harness connector.
NO >> Repair or replace harness between Intelligent Key unit and key switch and ignition knob switch.

KEY SWITCH (BCM INPUT)

Diagnosis Procedure

INFOID:0000000001563568

1. CHECK KEY SWITCH POWER SUPPLY CIRCUIT

1. Remove mechanical key from ignition switch.
2. Disconnect key switch and ignition knob switch connector.
3. Check voltage between key switch and ignition knob switch harness connector M66 terminal 3 and ground.

3 – Ground : Battery voltage.

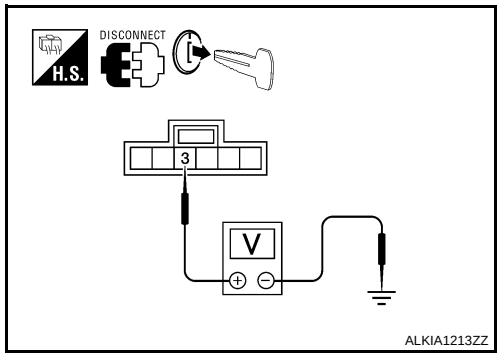

Is the

OK >> GO TO 2.
NG >> Check harness between key switch and ignition knob switch and fuse.

2. CHECK KEY SWITCH

Check continuity between key switch and ignition knob switch terminals 3 and 4.

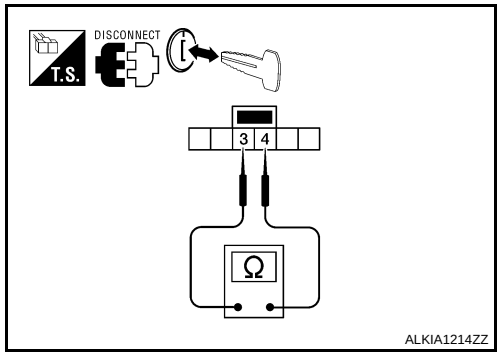

Component	Terminals		Condition	Continuity
Ignition switch	3	4	Insert mechanical key into ignition switch.	Yes
			Remove mechanical key from ignition switch.	No

OK or NG

OK >> GO TO 3.
NG >> Replace key cylinder assembly (built-in key switch).

3. CHECK KEY SWITCH SIGNAL CIRCUIT

1. Disconnect BCM connector.
2. Check continuity between BCM harness connector M18 terminal 37 and key switch and ignition knob switch harness connector M66 terminal 4.

37 – 4 : Continuity should exist.

3. Check continuity between BCM harness connector M18 terminal 37 and ground.

37 – Ground : Continuity should not exist.

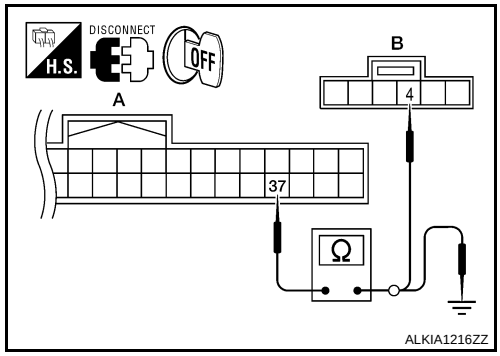

OK or NG

OK >> Key switch (BCM input) circuit is OK.
NG >> Repair or replace harness between key switch and ignition knob switch and BCM.

IGNITION KNOB SWITCH

Ignition Knob Switch Check

INFOID:0000000001563569

1. CHECK IGNITION KNOB SWITCH

With CONSULT-III

Display “PUSH SW” on DATA MONITOR screen, and check if ON/OFF display is linked to ignition switch operation.

Monitor item	Condition
PUSH SW	Ignition switch is pushed: ON
	Ignition switch is released: OFF

Without CONSULT-III

1. Turn ignition switch OFF.
2. Disconnect Intelligent Key unit connector.
3. Check voltage between Intelligent Key unit harness connector M164 terminal 27 and ground.

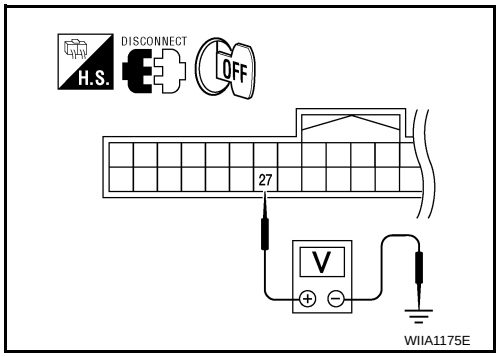

Connector	Terminals		Condition	Voltage (V) (Approx.)
	(+)	(–)		
M164	27	Ground	Ignition switch is pushed	Battery voltage
			Ignition switch is released	0

Is the inspection result normal?

YES >> Ignition knob switch is OK.
NO >> GO TO 2.

2. CHECK IGNITION KNOB SWITCH POWER SUPPLY CIRCUIT

1. Turn ignition switch OFF.
2. Disconnect key switch and ignition knob switch connector.
3. Check voltage between key switch and ignition knob switch harness connector M66 terminal 1 and ground.

1 - Ground : Battery voltage

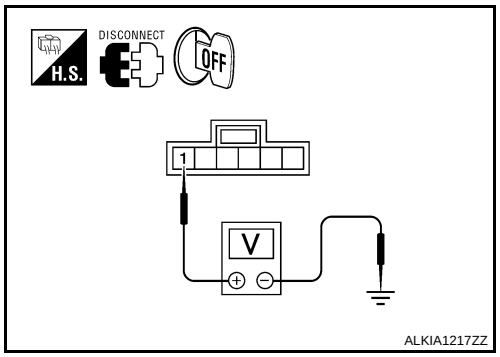

Is the inspection result normal?

YES >> GO TO 3.
NO >> Repair or replace key switch and ignition knob switch power supply circuit.

3. CHECK IGNITION KNOB SWITCH OPERATION

Check continuity between key switch and ignition knob switch terminals 1 and 2.

Component	Terminals		Condition	Continuity
Ignition knob switch	1	2	Ignition switch is pushed	Yes
			Ignition switch is released	No

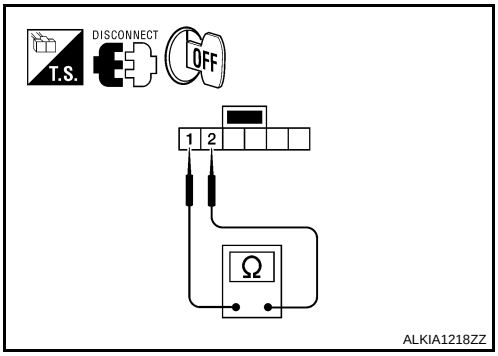

Is the inspection result normal?

YES >> GO TO 4.
NO >> Replace key switch and ignition knob switch.

4. CHECK IGNITION KNOB SWITCH CIRCUIT

1. Check continuity between Intelligent Key unit harness connector (A) M164 terminal 27 and key switch and ignition knob switch harness connector (B) M66 terminal 2.

27 - 2 : Continuity should exist.

2. Check continuity between Intelligent Key unit harness connector M164 terminal 27 and ground.

27 - Ground : Continuity should not exist.

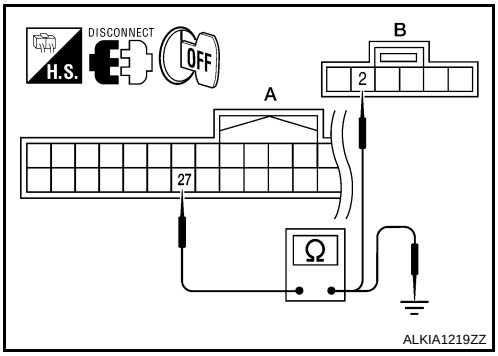

Is the inspection result normal?

YES >> Check the condition of harness and harness connector.
NO >> Repair or replace harness between Intelligent Key unit and key switch and ignition knob switch.

HEADLAMP FUNCTION

Diagnosis Procedure

INFOID:0000000001563570

1. CHECK HEADLAMP OPERATION

Do headlamps operate with headlamp switch?

YES or NO

YES >> Headlamp circuit is OK.
NO >> Check headlamp circuit. Refer to EXL-4, "Work Flow".

MAP LAMP AND IGNITION KEYHOLE ILLUMINATION FUNCTION

Diagnosis Procedure

INFOID:0000000001563571

1. CHECK MAP LAMP OPERATION

When room lamp switch is in "DOOR" position, open the driver or passenger door.
Map lamp and ignition keyhole illumination should illuminate.

Is the inspection result normal?

YES >> Map lamp circuit is OK.
NO >> Check map lamp circuit. Refer to INL-3, "Work Flow".

KEYFOB ID SET UP WITH CONSULT-III

ID Code Entry Procedure

INFOID:0000000001563572

KEYFOB ID SET UP WITH CONSULT-III

NOTE:

- **If a keyfob is lost, the ID code of the lost keyfob must be erased to prevent unauthorized use. A specific ID code can be erased with CONSULT-III. However, when the ID code of a lost keyfob is not known, all controller ID codes should be erased. After all ID codes are erased, the ID codes of all remaining and/or new keyfobs must be re-registered.**
- **When registering an additional keyfob, the existing ID codes in memory may or may not be erased. If five ID codes are stored in memory when an additional code is registered, only the oldest code is erased. If less than five codes are stored in memory when an additional code is registered, the new ID code is added and no ID codes are erased.**
- **Entry of a maximum of five ID codes is allowed. When more than five codes are entered, the oldest ID code will be erased.**
- **Even if the same ID code that is already in memory is input, the same ID code can be entered. The code is counted as an additional code.**

1. Turn ignition switch ON.
2. Select “BCM”.
3. Select “MULTI REMOTE ENT”.
4. Select “WORK SUPPORT”.
5. You can register, erase or confirm a keyfob ID code. To register a new code, select the following option and follow CONSULT-III instructions:
   - “REMO CONT ID REGIST”
     Use this mode to register a keyfob ID code.
     NOTE:
     Register the ID code when keyfob or BCM is replaced, or when additional keyfob is required.
   - “REMO CONT ID ERASUR”
     Use this mode to erase a keyfob ID code.
   - “REMO CONT ID CONFIR”
     Use this mode to confirm if a keyfob ID code is registered or not.

KEYFOB ID SET UP WITHOUT CONSULT-III

ID Code Entry Procedure

INFOID:0000000001563573

KEYFOB ID SET UP WITHOUT CONSULT-III

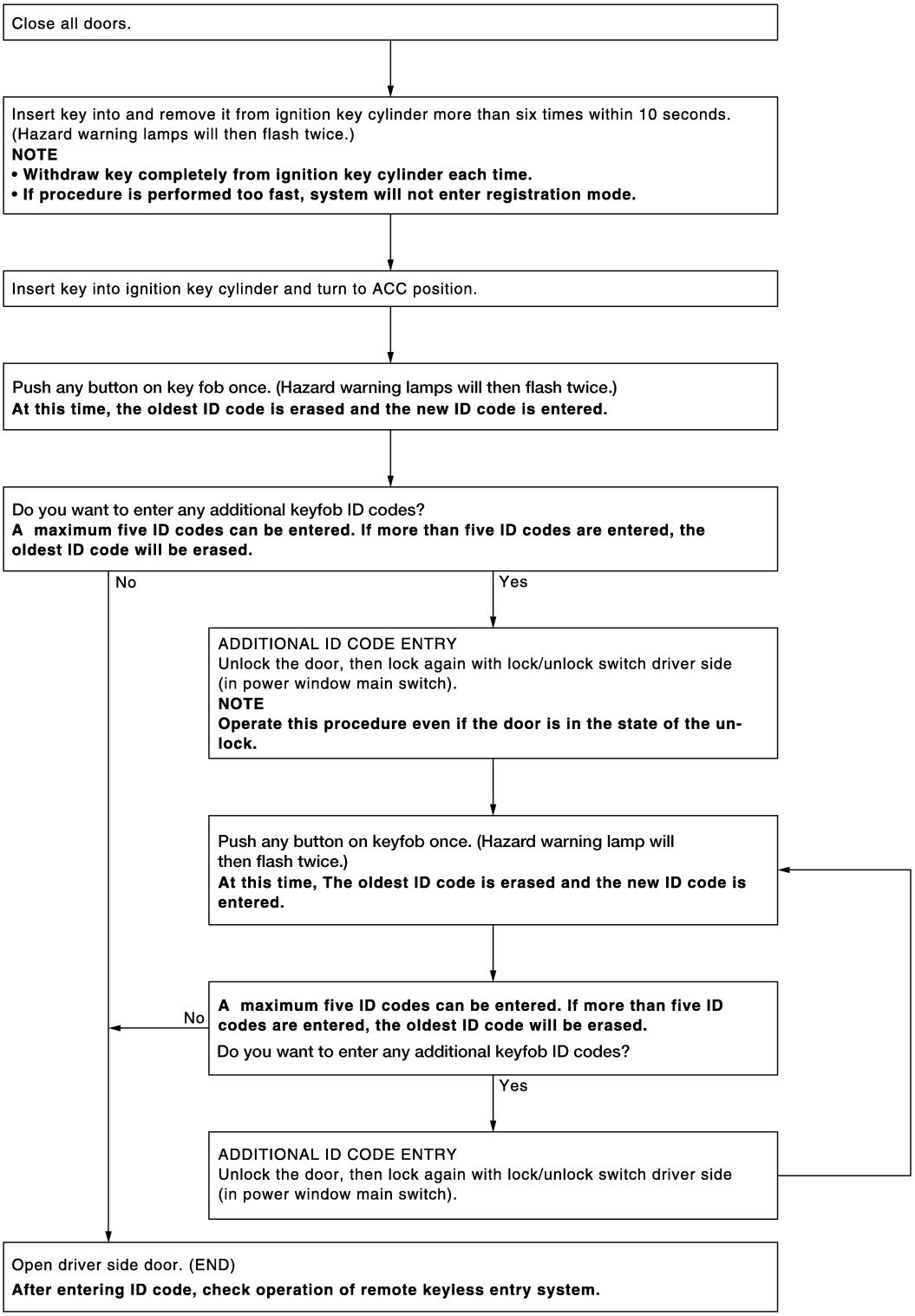

NOTE:

- If a keyfob is lost, the ID code of the lost keyfob must be erased to prevent unauthorized use. A specific ID code can be erased with CONSULT-III. However, when the ID code of a lost keyfob is not known, all control-

ler ID codes should be erased. After all ID codes are erased, the ID codes of all remaining and/or new keyfobs must be re-registered.
To erase all ID codes in memory, register one ID code (keyfob) five times. After all ID codes are erased, the ID codes of all remaining and/or new keyfobs must be re-registered.

- When registering an additional keyfob, the existing ID codes in memory may or may not be erased. If five ID codes are stored in memory, when an additional code is registered, only the oldest code is erased. If less than five ID codes are stored in memory, when an additional ID code is registered, the new ID code is added and no ID codes are erased.
- If you need to activate more than two additional new keyfobs, repeat the procedure “Additional ID code entry” for each new keyfob.
- Entry of maximum five ID codes is allowed. When more than five ID codes are entered, the oldest ID code will be erased.
- Even if same ID code that is already in the memory is input, the same ID code can be entered. The code is counted as an additional code.

BACK DOOR HALF SWITCH

Diagnosis Procedure

INFOID:0000000001563578

1. BACK DOOR HALF SWITCH SIGNAL INSPECTION

1. Turn ignition switch OFF.
2. While opening and closing the back door, check voltage between back door control unit connector D509 terminal 7 and ground.

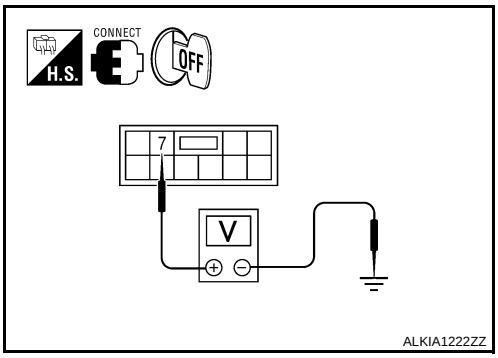

Terminals		Back door position	Voltage (V) (Approx.)
(+)	(-)		
7	Ground	Half-latch	0
		Open/close	Battery voltage

s the inspection result normal?

YES >> Switch is OK.
NO >> GO TO 2.

2. BACK DOOR HALF SWITCH CIRCUIT INSPECTION

1. Disconnect back door control unit and back door cinching latch unit connectors.
2. Check continuity between back door control unit connector (A) D509 terminal 7 and back door cinching latch unit connector (B) D502 terminal 6.

7 - 6 : Continuity should exist.

3. Check continuity between back door control unit connector (A) D509 terminal 7 and ground.

7 - Ground : Continuity should not exist.

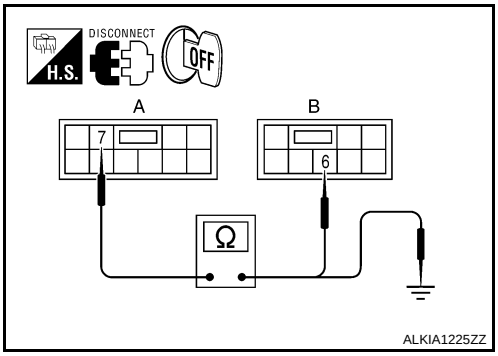

s the inspection result normal?

YES >> GO TO 3.
NO >> Repair or replace harness.

3. BACK DOOR HALF SWITCH GROUND INSPECTION

Check continuity between back door cinching latch unit connector D502 terminal 8 and ground.

8 - Ground : Continuity should exist.

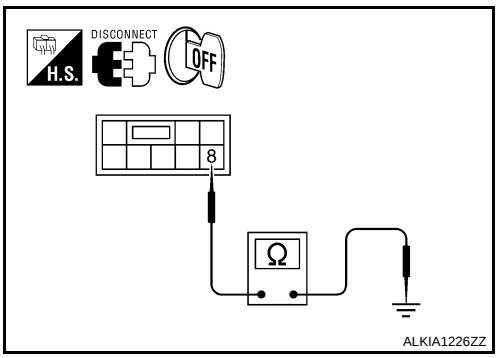

s the inspection result normal?

YES >> GO TO 4.
NO >> Repair or replace harness.

4. BACK DOOR HALF SWITCH SIGNAL INSPECTION

Check continuity between back door cinching latch unit terminals 6 and 8.

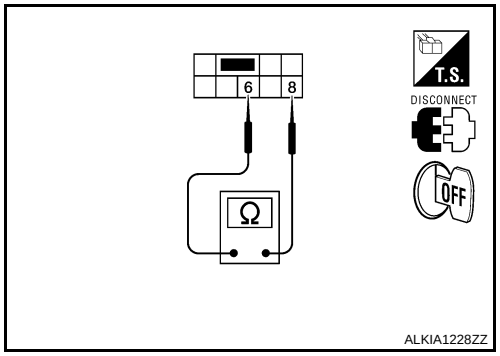

Terminals		Back door position	Continuity
6	8	Half-latch	Yes
		Open/close	No

s the inspection result normal?

YES >> Replace back door control unit.
NO >> Replace back door cinching latch unit.

BACK DOOR CLOSE SWITCH SYSTEM

Diagnosis Procedure

INFOID:0000000001724699

1. BACK DOOR CLOSE SWITCH SIGNAL INSPECTION

1. Turn ignition switch OFF.
2. While opening and closing the back door, check voltage between back door control unit connector D509 terminal 8 and ground.

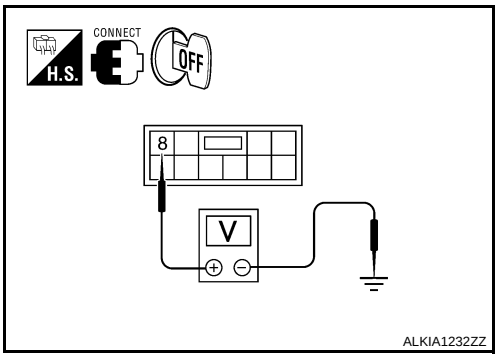

Terminals		Back door position	Voltage (V) (Approx.)
(+)	(-)		
8	Ground	Open/half-latch	Battery voltage
		Closed	0

s the inspection result normal?

YES >> Switch is OK.
NO >> GO TO 2.

2. BACK DOOR CLOSE SWITCH CIRCUIT INSPECTION

1. Disconnect back door control unit and back door cinching latch unit connectors.
2. Check continuity between back door control unit connector (A) D509 terminal 8 and back door cinching latch unit connector (B) D502 terminal 5.

8 - 5 : Continuity should exist.

3. Check continuity between back door control unit connector (A) D509 terminal 8 and ground.

8 - Ground : Continuity should not exist.

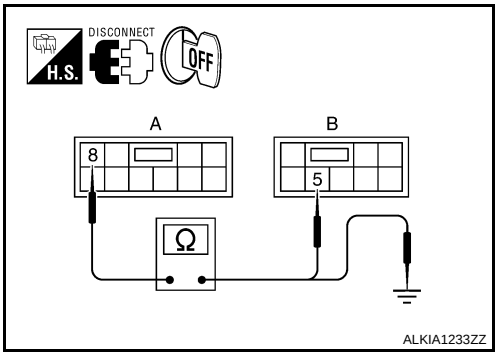

s the inspection result normal?

YES >> GO TO 3.
NO >> Repair or replace harness.

3. BACK DOOR CLOSE SWITCH GROUND INSPECTION

Check continuity between back door cinching latch unit connector D502 terminal 8 and ground.

8 - Ground : Continuity should exist.

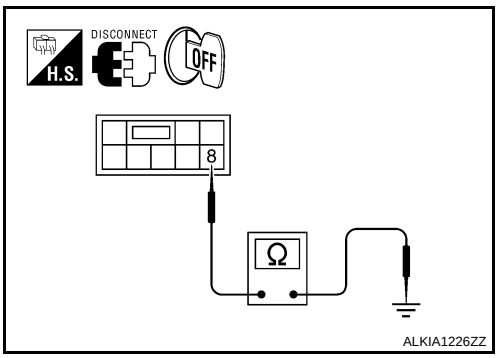

s the inspection result normal?

YES >> GO TO 4.
NO >> Repair or replace harness.

4. BACK DOOR CLOSE SWITCH SIGNAL INSPECTION

Check continuity between back door cinching latch unit terminals 5 and 8.

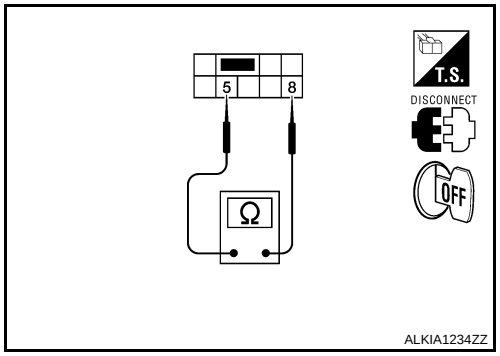

Terminals		Back door position	Continuity
5	8	Half-latch/open	No
		Closed	Yes

s the inspection result normal?

YES >> Replace back door control unit.
NO >> Replace back door cinching latch unit.

BACK DOOR NEUTRAL SWITCH

Diagnosis Procedure

INFOID:0000000001724700

1. BACK DOOR NEUTRAL SWITCH SIGNAL INSPECTION

1. Turn ignition switch OFF.
2. While opening and closing the back door, check voltage between back door control unit connector D509 terminal 9 and ground.

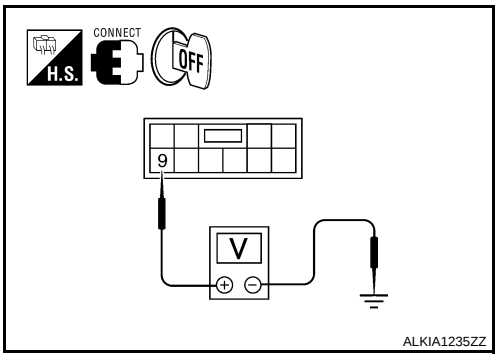

Terminals		Back door position	Voltage (V) (Approx.)
(+)	(-)		
9	Ground	Half-latch/closed	Battery voltage
		Open	0

s the inspection result normal?

YES >> Switch is OK.
NO >> GO TO 2.

2. BACK DOOR NEUTRAL SWITCH CIRCUIT INSPECTION

1. Disconnect back door control unit and back door cinching latch unit connectors.
2. Check continuity between back door control unit connector (A) D509 terminal 9 and back door cinching latch unit connector (B) D502 terminal 4.

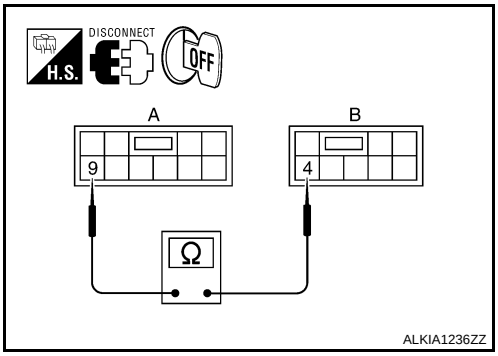

9 - 4 : Continuity should exist.

3. Check continuity between back door control unit connector (A) D509 terminal 9 and ground.

9 - Ground : Continuity should not exist.

s the inspection result normal?

YES >> GO TO 3.
NO >> Repair or replace harness.

3. BACK DOOR NEUTRAL SWITCH GROUND INSPECTION

Check continuity between back door cinching latch unit connector D502 terminal 8 and ground.

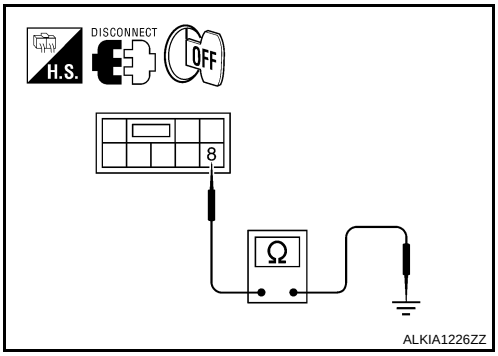

8 - Ground : Continuity should exist.

s the inspection result normal?

YES >> GO TO 4.
NO >> Repair or replace harness.

4. BACK DOOR NEUTRAL SWITCH SIGNAL INSPECTION

Check continuity between back door cinching latch unit terminals 4 and 8.

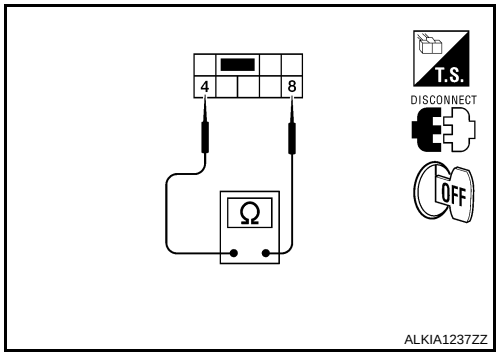

Terminals		Back door position	Continuity
4	8	Half-latch/closed	No
		Open	Yes

s the inspection result normal?

YES >> Replace back door control unit.
NO >> Replace back door cinching latch unit.

BACK DOOR RELEASE SWITCH

Diagnosis Procedure

INFOID:0000000001563584

1. CHECK BACK DOOR RELEASE SWITCH

With CONSULT-II

Check back door release switch (“BD/TR REQ SW”) in “DATA MONITOR” mode.

Monitor item	Condition
BD/TR REQ SW	Back door release switch is pressed: ON
	Back door release switch is released: OFF

Without CONSULT-II

1. Turn ignition switch OFF.
2. Check voltage between Intelligent Key Unit connector M164 terminal 24 and ground.

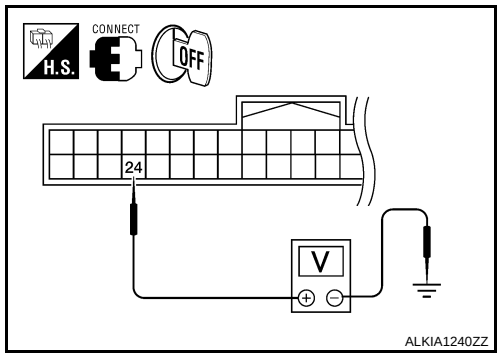

Connector	Terminals		Condition	Voltage (V) (Approx.)
	(+)	(–)		
M164	24	Ground	Back door release switch is pressed	0
			Back door release switch is released	5

OK or NG

OK >> GO TO 6.
NG >> GO TO 2.

2. CHECK BACK DOOR RELEASE SWITCH OPERATION

1. Turn ignition switch OFF.
2. Disconnect back door release switch connector.
3. Check continuity between back door release switch terminals 1 and 2.

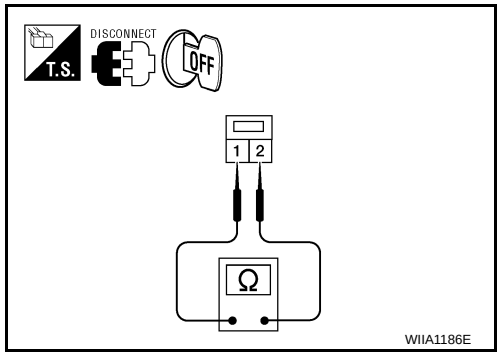

Component	Terminals		Condition	Continuity
back door release switch	1	2	Back door release switch is pressed	Yes
			Back door release switch is released	No

OK or NG

OK >> GO TO 3.
NG >> Replace back door release switch.

3. CHECK BACK DOOR RELEASE SWITCH GROUND CIRCUIT

Check continuity between back door release switch harness connector D510 terminal 2 and ground.

2 - Ground : Continuity should exist.

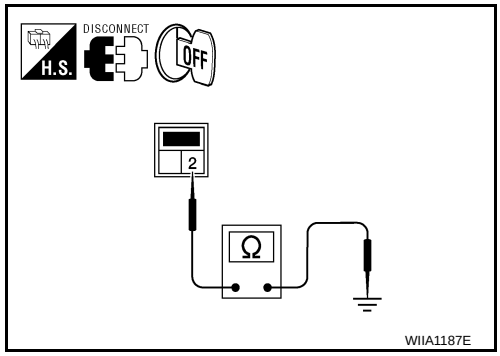

OK or NG

OK >> GO TO 4.
NG >> Repair or replace back door release switch ground circuit.

4. CHECK BACK DOOR RELEASE SWITCH CIRCUIT

1. Disconnect Intelligent Key unit connector.
2. Check continuity between Intelligent Key Unit harness connector M164 terminals 24 and back door release switch harness connector D510 terminal 1.

24 - 1 : Continuity should exist.

3. Check continuity between Intelligent Key Unit harness connector M164 terminal 24 and ground.

24 - Ground : Continuity should not exist.

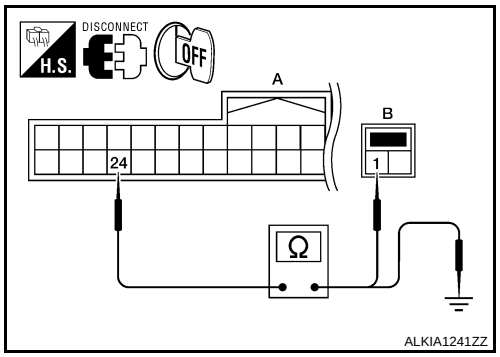

OK or NG

OK >> GO TO 5.
NG >> Repair or replace harness between Intelligent Key Unit and back door release switch.

5. CHECK BACK DOOR RELEASE SWITCH SIGNAL

1. Connect Intelligent Key Unit connector.
2. Check voltage between back door release switch harness connector D510 terminal 1 and ground.

1 - Ground : Approx. 5v

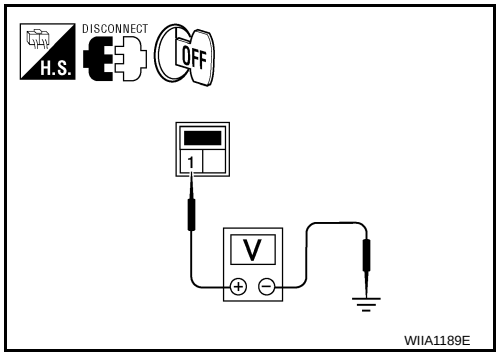

OK or NG

OK >> Check condition of harness and connector.
NG >> Replace Intelligent Key Unit. Refer to SEC-95, "Removal and Installation".

6. CHECK INTELLIGENT KEY UNIT OUTPUT

Check voltage between back door control unit connector D509 terminal 6 and ground.

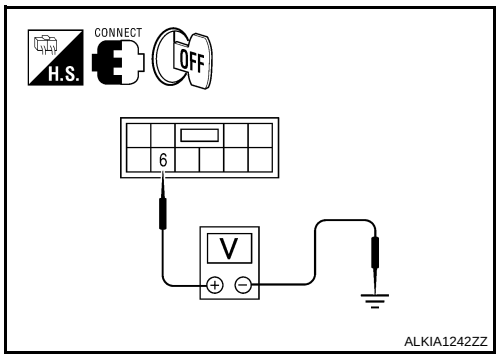

Connector	Terminals		Condition	Voltage (V) (Approx.)
	(+)	(–)		
D509	6	Ground	Back door release switch is pressed	0
			Back door release switch is released	Battery voltage

OK or NG

OK >> back door release switch is OK.
NG >> GO TO 7.

7. CHECK BACK DOOR CONTROL UNIT

1. Disconnect Intelligent Key unit and back door control unit connectors.
2. Check continuity between Intelligent Key Unit harness connector M164 terminal 23 and back door control unit connector D509 terminal 6.

23 - 6 : Continuity should exist.

3. Check continuity between Intelligent Key Unit harness connector M164 terminal 23 and ground.

23 - Ground : Continuity should not exist.

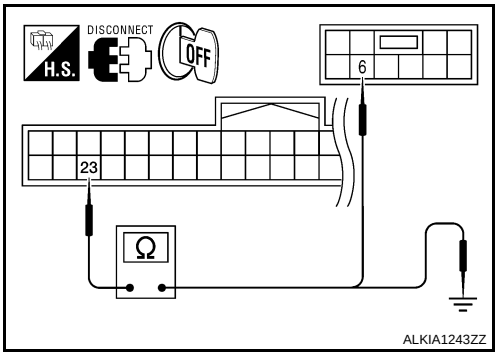

OK or NG

OK >> Replace back door control unit.
NG >> Repair or replace harness between Intelligent Key Unit and back door control unit.

BACK DOOR CINCHING LATCH UNIT MOTOR

Diagnosis Procedure

INFOID:0000000001563585

1. CINCH LATCH MOTOR CIRCUIT INSPECTION

1. Turn ignition switch OFF.
2. Disconnect back door control unit and back door cinching latch unit connectors.
3. Check continuity between back door control unit connector (A) D509 terminals 2, 3 and back door cinching latch unit connector D502 (B) terminals 1, 2.

2 - 1	**: Continuity should exist.**
3 - 2	**: Continuity should exist.**

4. Check continuity between back door control unit connector (A) D509 terminals 2, 3 and ground.

2 - Ground	**: Continuity should not exist.**
3 - Ground	**: Continuity should not exist.**

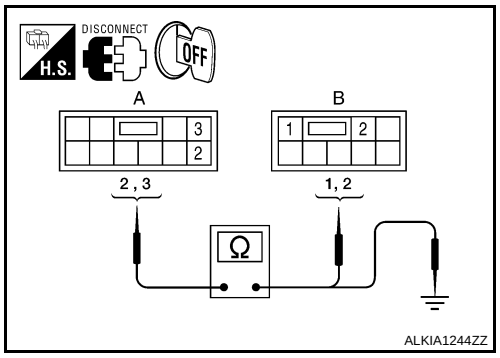

Is the inspection result normal?

YES >> GO TO 2.
NO >> Repair the harness between the back door control unit and the back door cinching latch unit.

2. CINCH LATCH MOTOR OPERATION INSPECTION

Connect battery power to terminals 1 and 2 on the back door cinching latch unit and check motor operation.

1 (+) - 2 (-)	**: It operates.**
1 (-) - 2 (+)	**: It operates. (Reverse rotation)**

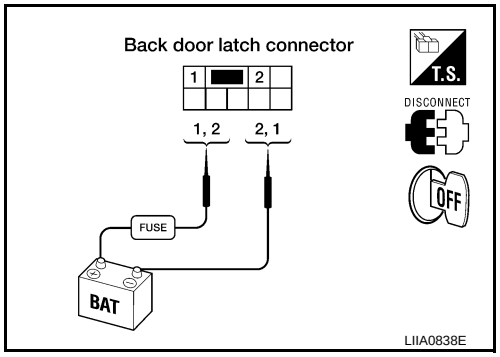

Is the inspection result normal?

YES >> Motor is OK.
NO >> Replace the back door cinching latch unit.

HOMELINK UNIVERSAL TRANSCEIVER

Description

INFOID:0000000001563590

Homelink universal transceiver can store and transmit a maximum of 3 radio signals.
Allows operation of garage doors, gates, home and office lighting, entry door locks and security system, etc.
Homelink universal transceiver power supply uses vehicle battery, which enables it to maintain every program in case battery is discharged or removed.

Component Function Check

INFOID:0000000001563591

1.CHECK FUNCTION

Check that system receiver (garage door opener, etc.) operates with original hand-held transmitter.

Is the inspection result normal?

YES >> GO TO 2.
NO >> Receiver or hand-held transmitter is malfunctioning.

2.CHECK ILLUMINATION

1. Turn ignition switch “OFF”.
2. Press each of the transmitter buttons and watch for the red light to illuminate with each button.

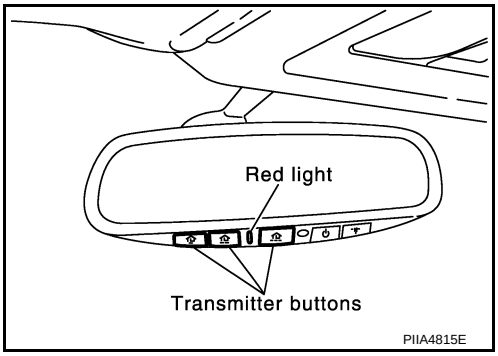

Is the inspection result normal?

YES >> GO TO 3.
NO >> Refer to DLK-114, "Diagnosis Procedure".

3.CHECK TRANSMITTER

Check transmitter with Tool*.
*:For details, refer to Technical Service Bulletin.

Is the inspection result normal?

YES >> Receiver or hand-held transmitter malfunction, not vehicle related.
NO >> Replace auto anti-dazzling inside mirror (homelink universal transceiver).

Diagnosis Procedure

INFOID:0000000001563592

1.CHECK POWER SUPPLY

1. Disconnect auto anti-dazzling inside mirror (homelink universal transceiver) connector.
2. Check voltage between auto anti-dazzling inside mirror (homelink universal transceiver) harness connector and ground.

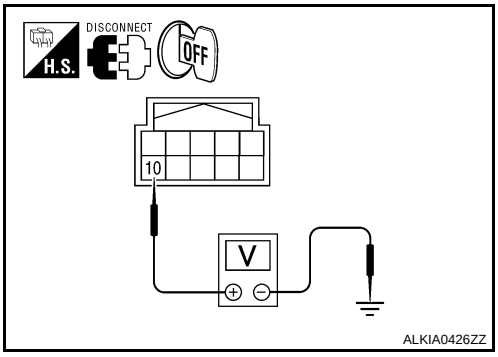

Auto anti-dazzling inside mirror (Homelink universal transceiver) connector	Terminal		Condition	Voltage (V) (Approx.)
R7	10	Ground	Ignition switch position: LOCK	Battery voltage

Is the inspection result normal?

YES >> GO TO 2.
NO >> Check the following.
- 10A fuse [No. 19 located in the fuse block (J/B)]
- Harness for open or short between fuse and auto anti-dazzling inside mirror (homelink universal transceiver).

2. CHECK GROUND CIRCUIT

Check continuity between auto anti-dazzling inside mirror (homelink universal transceiver) harness connector and ground.

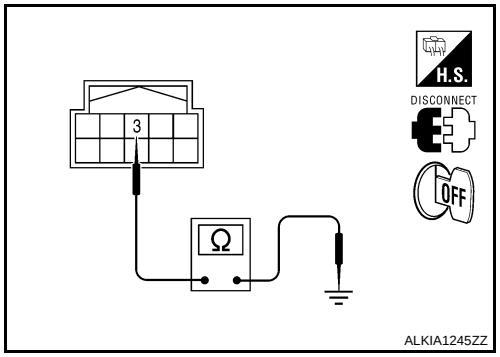

Auto anti-dazzling inside mirror (Homelink universal transceiver) connector	Terminal	Ground	Continuity
R7	3		Yes

Is the inspection result normal?

YES >> GO TO 3.
NO >> Repair harness.

3. CHECK INTERMITTENT INCIDENT

Refer to GI-51, "Intermittent Incident".

>> INSPECTION END.

ECU DIAGNOSIS

BCM (BODY CONTROL MODULE)

Reference Value

INFOID:0000000001563593

VALUES ON THE DIAGNOSIS TOOL

Refer to BCS-38, "Reference Value".

TERMINAL LAYOUT

Refer to BCS-41, "Terminal Layout".

Wiring Diagram — POWER DOOR LOCK SYSTEM —

INFOID:0000000001563594

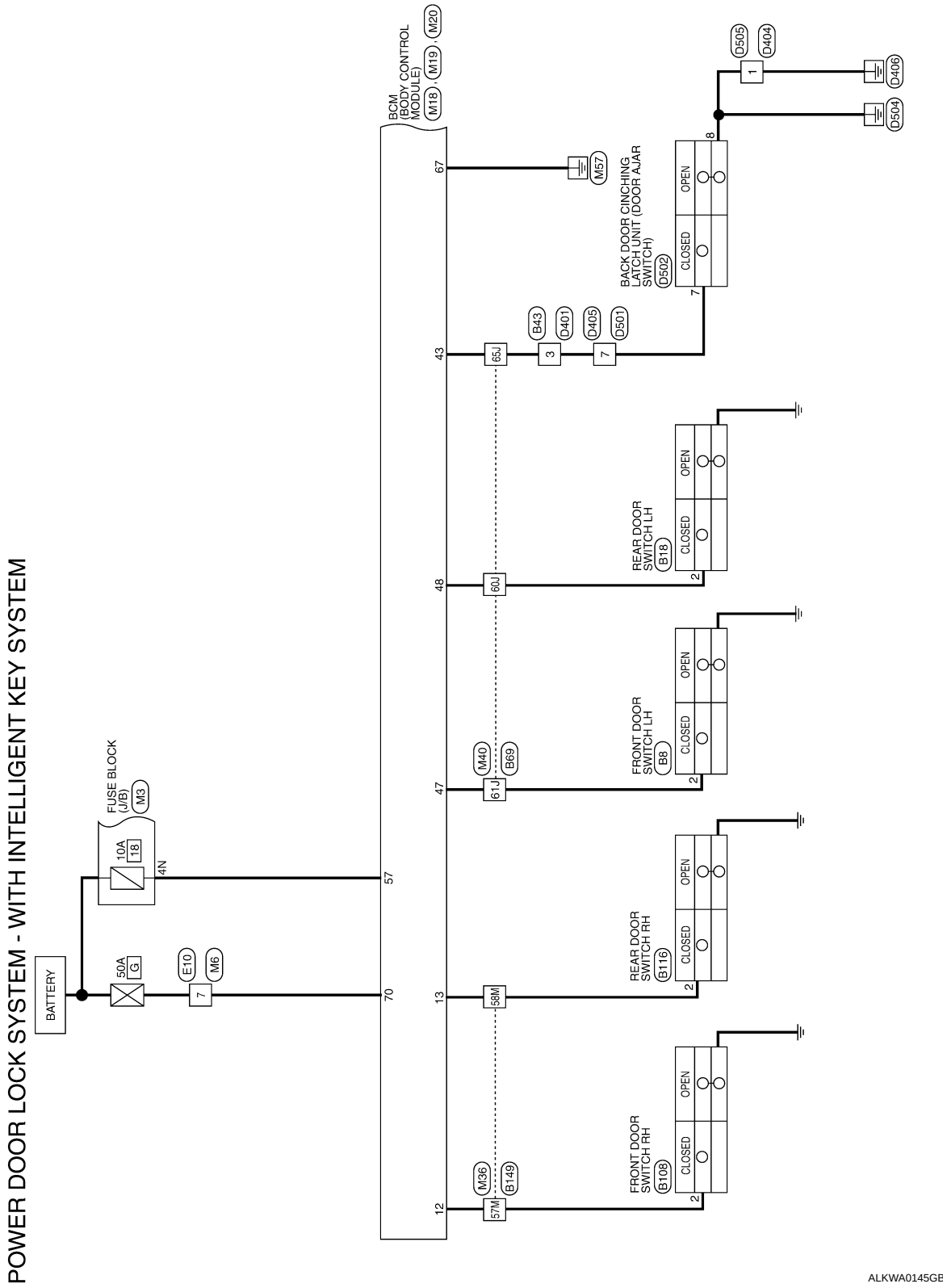

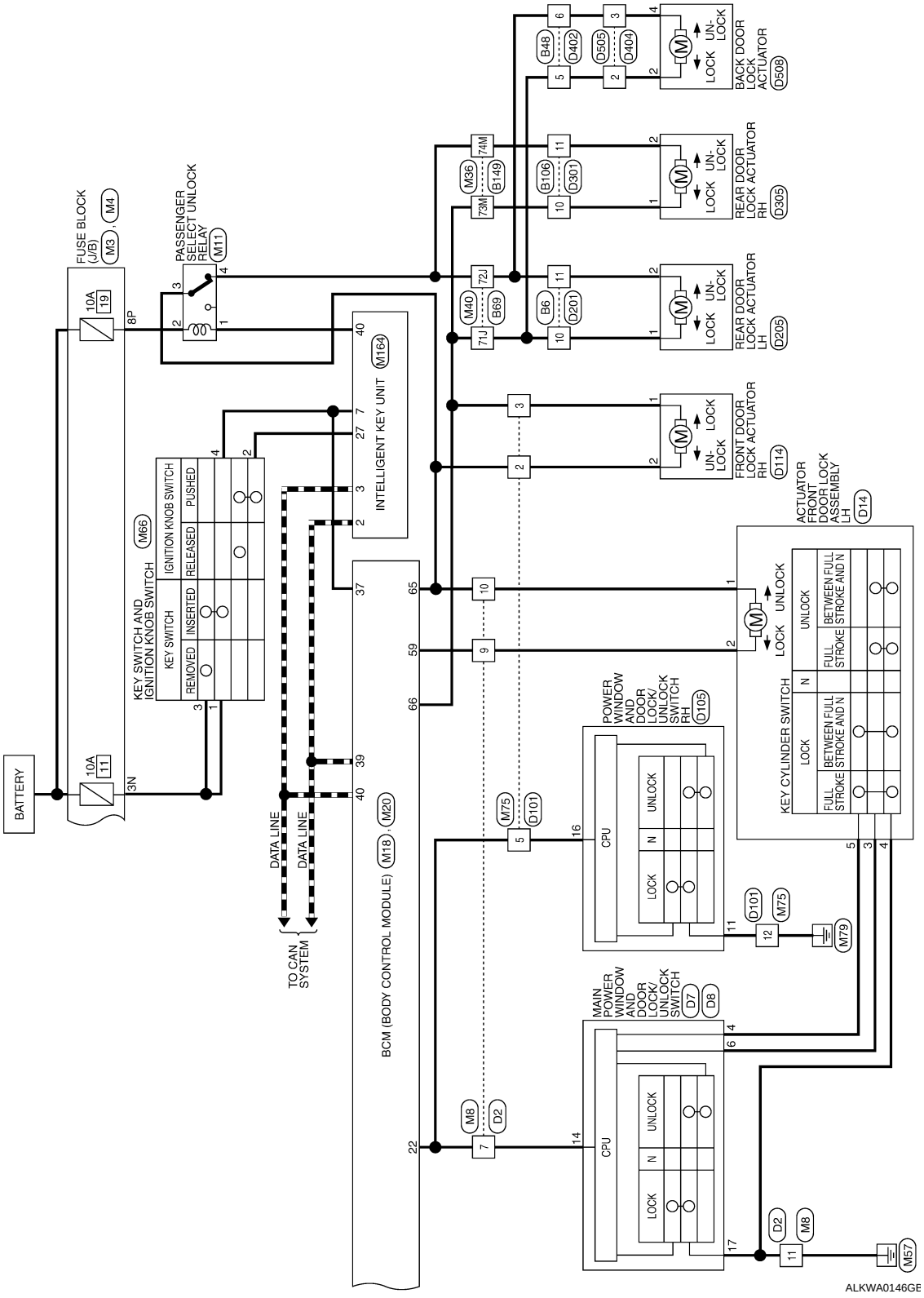
: DATA LINE
BATTERY
FUSE BLOCK (J/B) M3, M4
10A 19
10A 11
8P
3N
PASSENGER SELECT UNLOCK RELAY M11
KEY SWITCH AND IGNITION KNOB SWITCH M66
KEY SWITCH
REMOVED
INSERTED
IGNITION KNOB SWITCH
RELEASED
PUSHED
INTELLIGENT KEY UNIT M164
BCM (BODY CONTROL MODULE) M18, M20
DATA LINE
DATA LINE
TO CAN SYSTEM
M40
B69
72J
71J
M36
B149
74M
73M
B6
D201
B106
D301
B48
D402
D505
D404
FRONT DOOR LOCK ACTUATOR RH D114
REAR DOOR LOCK ACTUATOR LH D205
REAR DOOR LOCK ACTUATOR RH D305
BACK DOOR LOCK ACTUATOR D508
LOCK
UN-LOCK
ACTUATOR FRONT DOOR LOCK ASSEMBLY LH D14
KEY CYLINDER SWITCH
LOCK
UNLOCK
FULL STROKE
BETWEEN FULL STROKE AND N
N
POWER WINDOW AND DOOR LOCK/ UNLOCK SWITCH RH D105
CPU
M75
D101
M79
MAIN POWER WINDOW AND DOOR LOCK/ UNLOCK SWITCH D7 D8
M8
D2
M57
ALKWA0146GE

POWER DOOR LOCK SYSTEM - WITH INTELLIGENT KEY SYSTEM CONNECTORS

Connector No.	M3
Connector Name	FUSE BLOCK (J/B)
Connector Color	WHITE

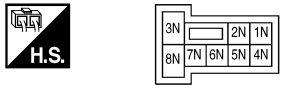

Terminal No.	Color of Wire	Signal Name
3N	R/B	–
4N	R/Y	–

Connector No.	M4
Connector Name	FUSE BLOCK (J/B)
Connector Color	WHITE

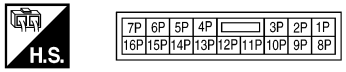

Terminal No.	Color of Wire	Signal Name
8P	R/Y	–

Connector No.	M6
Connector Name	WIRE TO WIRE
Connector Color	WHITE

Terminal No.	Color of Wire	Signal Name
7	W	–

Connector No.	M8
Connector Name	WIRE TO WIRE
Connector Color	WHITE

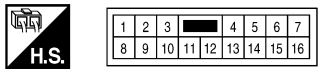

Terminal No.	Color of Wire	Signal Name
8	LG	–
9	GR	–
10	V	–
11	B	–

Connector No.	M11
Connector Name	PASSENGER SELECT UNLOCK RELAY
Connector Color	BLACK

Terminal No.	Color of Wire	Signal Name
1	R	–
2	R/B	–
3	V	–
4	L	–

Connector No.	M18
Connector Name	BCM (BODY CONTROL MODULE)
Connector Color	WHITE

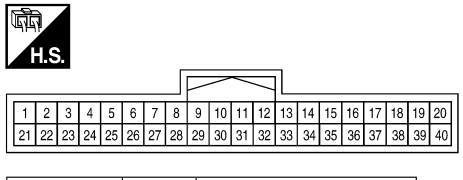

Terminal No.	Color of Wire	Signal Name
12	LG	DOOR SW (AS)
13	L	DOOR SW (RR)
22	V	BUS
37	B	KEY SW
39	L	CAN-H
40	P	CAN-L

ALKIA0982GB

Connector No.	M19
Connector Name	BCM (BODY CONTROL MODULE)
Connector Color	WHITE

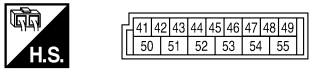

Terminal No.	Color of Wire	Signal Name
43	SB	BACK DOOR SW
47	GR	DOOR SW (DR)
48	P	DOOR SW (RL)

Connector No.	M20
Connector Name	BCM (BODY CONTROL MODULE)
Connector Color	BLACK

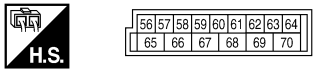

Terminal No.	Color of Wire	Signal Name
57	R/Y	BAT (FUSE)
59	GR	DOOR UNLOCK OUTPUT (DR)
65	V	DOOR LOCK OUTPUT (ALL)
66	L	DOOR UNLOCK OUTPUT (OTHER)
67	B	GND (POWER)

Connector No.	M27
Connector Name	KEY SWITCH
Connector Color	WHITE

Terminal No.	Color of Wire	Signal Name
1	B	–
2	Y	–

Connector No.	M31
Connector Name	WIRE TO WIRE
Connector Color	WHITE

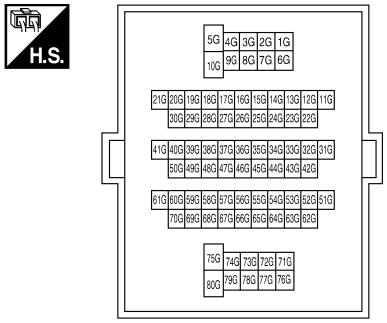

Terminal No.	Color of Wire	Signal Name
55G	Y	–

ALKIA0983GB

Connector No.	M36
Connector Name	WIRE TO WIRE
Connector Color	WHITE

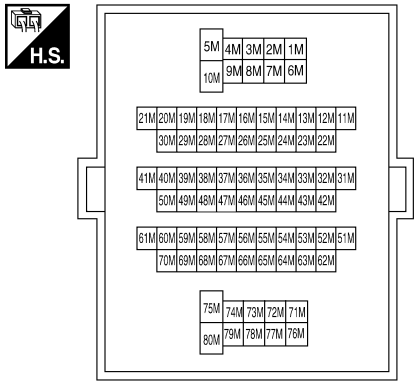

Terminal No.	Color of Wire	Signal Name
57M	LG	–
58M	L	–
73M	SB	–
74M	V	–

Connector No.	M40
Connector Name	WIRE TO WIRE
Connector Color	WHITE

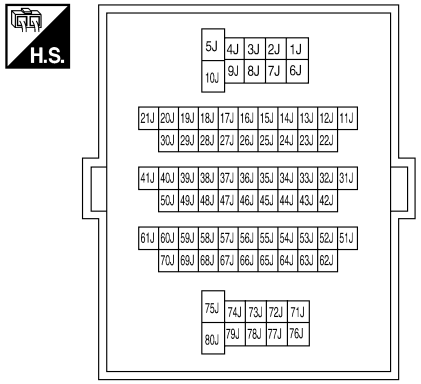

ALKIA0984GB

Terminal No.	Color of Wire	Signal Name
60J	P	–
61J	GR	–
65J	SB	–
71J	L	–
72J	V	–

Connector No.	M66
Connector Name	KEY SWITCH AND IGNITION KNOB SWITCH
Connector Color	GRAY

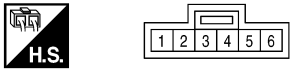

Terminal No.	Color of Wire	Signal Name
1	R	–
2	G	–
3	R/B	–
4	SB	–

Connector No.	M75
Connector Name	WIRE TO WIRE
Connector Color	WHITE

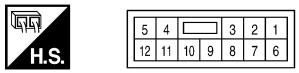

Terminal No.	Color of Wire	Signal Name
2	V	–
3	L	–
5	V	–
12	B	–

Connector No.	M164
Connector Name	INTELLIGENT KEY UNIT
Connector Color	WHITE

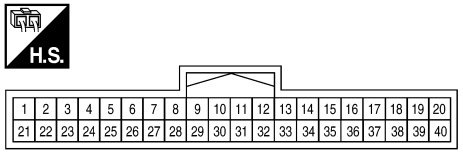

Terminal No.	Color of Wire	Signal Name
2	L	CAN-H
3	P	CAN-L
7	SB	KEY_SW_INPUT
27	G	PUSH_SW_INPUT
40	R	RLY_CTRL_LOCK_AS

Connector No.	E10
Connector Name	WIRE TO WIRE
Connector Color	WHITE

Terminal No.	Color of Wire	Signal Name
7	W	–

Connector No.	E152
Connector Name	WIRE TO WIRE
Connector Color	WHITE

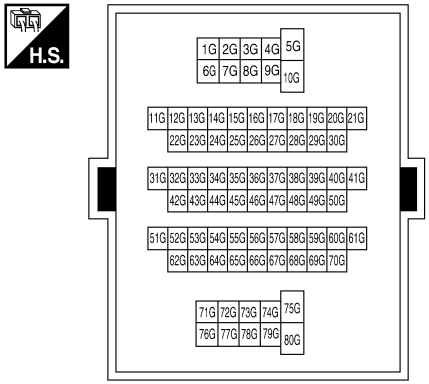

Terminal No.	Color of Wire	Signal Name
55G	Y	–

Connector No.	B6
Connector Name	WIRE TO WIRE
Connector Color	WHITE

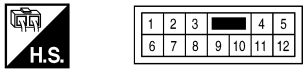

Terminal No.	Color of Wire	Signal Name
10	L	–
11	V	–

ALKIA0985GB

Connector No.	B8
Connector Name	FRONT DOOR SWITCH LH
Connector Color	WHITE

Terminal No.	Color of Wire	Signal Name
2	GR	–

Connector No.	B18
Connector Name	REAR DOOR SWITCH LH
Connector Color	WHITE

Terminal No.	Color of Wire	Signal Name
2	P	–

Connector No.	B43
Connector Name	WIRE TO WIRE
Connector Color	WHITE

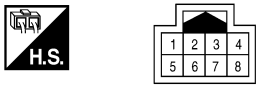

Terminal No.	Color of Wire	Signal Name
3	SB	–

Connector No.	B48
Connector Name	WIRE TO WIRE
Connector Color	WHITE

Terminal No.	Color of Wire	Signal Name
5	V	–
6	G	–

Connector No.	B69
Connector Name	WIRE TO WIRE
Connector Color	WHITE

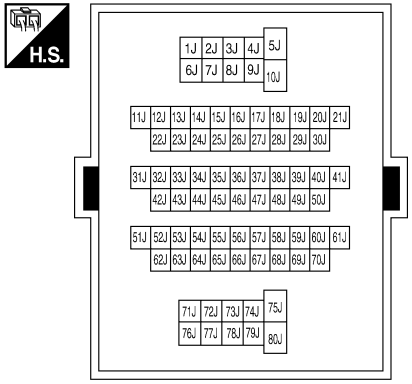

Terminal No.	Color of Wire	Signal Name
60J	P	–
61J	GR	–
65J	SB	–
71J	L	–
72J	V	–

ALKIA0986GB

Connector No.	B106
Connector Name	WIRE TO WIRE
Connector Color	WHITE

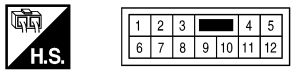

Terminal No.	Color of Wire	Signal Name
10	SB	–
11	V	–

Connector No.	B108
Connector Name	FRONT DOOR SWITCH RH
Connector Color	WHITE

Terminal No.	Color of Wire	Signal Name
2	LG	–

Connector No.	B116
Connector Name	REAR DOOR SWITCH RH
Connector Color	WHITE

Terminal No.	Color of Wire	Signal Name
2	L	–

Connector No.	B149
Connector Name	WIRE TO WIRE
Connector Color	WHITE

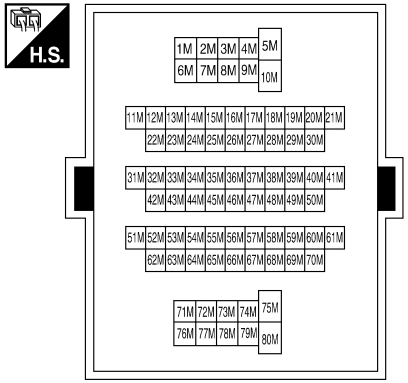

Terminal No.	Color of Wire	Signal Name
57M	LG	–
58M	L	–
73M	SB	–
74M	V	–

Connector No.	D2
Connector Name	WIRE TO WIRE
Connector Color	WHITE

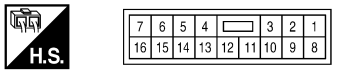

Terminal No.	Color of Wire	Signal Name
7	V	–
9	G	–
10	V	–
11	B	–

ALKIA0987GB

Connector No.	D7
Connector Name	MAIN POWER WINDOW AND DOOR LOCK/UNLOCK SWITCH
Connector Color	WHITE

H.S.

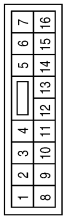

Terminal No.	Color of Wire	Signal Name
4	SB	KEY CYL LOCK SW
6	R/W	KEY CYL UNLOCK SW
14	V	POWER WINDOW SERIAL LINK

Connector No.	D8
Connector Name	MAIN POWER WINDOW AND DOOR LOCK/UNLOCK SWITCH
Connector Color	WHITE

H.S.

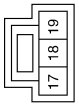

Terminal No.	Color of Wire	Signal Name
17	B	GND

Connector No.	D14
Connector Name	FRONT DOOR LOCK ASSEMBLY LH
Connector Color	WHITE

H.S.

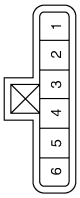

Terminal No.	Color of Wire	Signal Name
1	V	–
2	G	–
3	SB	–
4	B	–
5	R/W	–

Connector No.	D101
Connector Name	WIRE TO WIRE
Connector Color	WHITE

H.S.

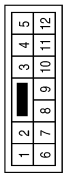

Terminal No.	Color of Wire	Signal Name
2	V	–
3	G/Y	–
5	V	–
12	B	–

Connector No.	D105
Connector Name	POWER WINDOW AND DOOR LOCK/UNLOCK SWITCH RH
Connector Color	WHITE

H.S.

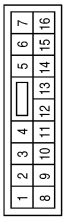

Terminal No.	Color of Wire	Signal Name
11	B	GND
16	V	POWER WINDOW SERIAL LINK

Connector No.	D114
Connector Name	FRONT DOOR LOCK ACTUATOR RH
Connector Color	WHITE

H.S.

Terminal No.	Color of Wire	Signal Name
1	G/Y	–
2	V	–

ALKIA0988GB

Connector No.	D201
Connector Name	WIRE TO WIRE
Connector Color	WHITE

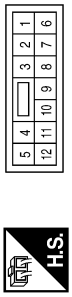

Terminal No.	Color of Wire	Signal Name
10	G	–
11	V	–

Connector No.	D205
Connector Name	REAR DOOR LOCK ACTUATOR LH
Connector Color	WHITE

Terminal No.	Color of Wire	Signal Name
1	G	–
2	V	–

Connector No.	D301
Connector Name	WIRE TO WIRE
Connector Color	WHITE

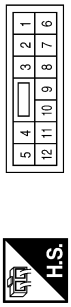

Terminal No.	Color of Wire	Signal Name
10	G	–
11	V	–

Connector No.	D305
Connector Name	REAR DOOR LOCK ACTUATOR RH
Connector Color	WHITE

Terminal No.	Color of Wire	Signal Name
1	G	–
2	V	–

Connector No.	D401
Connector Name	WIRE TO WIRE
Connector Color	WHITE

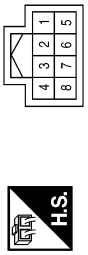

Terminal No.	Color of Wire	Signal Name
3	SB	–

Connector No.	D402
Connector Name	WIRE TO WIRE
Connector Color	WHITE

Terminal No.	Color of Wire	Signal Name
5	V	–
6	G	–

ALKIA0989GB

Connector No.	D404
Connector Name	WIRE TO WIRE
Connector Color	WHITE

Terminal No.	Color of Wire	Signal Name
1	B	–
2	V	–
3	G	–

Connector No.	D405
Connector Name	WIRE TO WIRE
Connector Color	WHITE

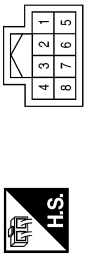

Terminal No.	Color of Wire	Signal Name
7	SB	–

Connector No.	D501
Connector Name	WIRE TO WIRE
Connector Color	WHITE

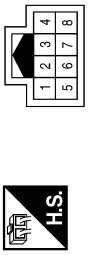

Terminal No.	Color of Wire	Signal Name
7	SB	–

Connector No.	D502
Connector Name	BACK DOOR CINCHING LATCH UNIT
Connector Color	WHITE

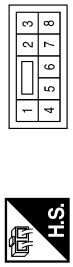

Terminal No.	Color of Wire	Signal Name
7	SB	–
8	B	–

Connector No.	D505
Connector Name	WIRE TO WIRE
Connector Color	WHITE

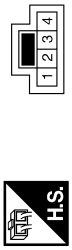

Terminal No.	Color of Wire	Signal Name
1	B	–
2	V	–
3	G	–

Connector No.	D508
Connector Name	BACK DOOR LOCK ACTUATOR
Connector Color	WHITE

Terminal No.	Color of Wire	Signal Name
2	V	–
4	G	–

ALKIA0990GB

Fail Safe

INFOID:0000000001563595

Fail-safe index

BCM performs fail-safe control when any DTC listed below is detected.

Display contents of CONSULT	Fail-safe	Cancellation
U1000: CAN COMM CIRCUIT	Inhibit engine cranking	When the BCM re-establishes communication with the other modules.
U1010: CONTROL UNIT (CAN)	Inhibit engine cranking	When the BCM re-start communicating with the other modules.

DTC Inspection Priority Chart

INFOID:0000000001563596

If some DTCs are displayed at the same time, perform inspections one by one based on the following priority chart.

Priority	DTC
1	• U1000: CAN COMM CIRCUIT • U1010: CONTROL UNIT (CAN)

DTC Index

INFOID:0000000001563597

NOTE:

Details of time display

- CRNT: Displays when there is a malfunction now or after returning to the normal condition until turning ignition switch OFF → ON again.
- 1 - 39: Displayed if any previous malfunction is present when current condition is normal. It increases like 1 → 2 → 3...38 → 39 after returning to the normal condition whenever ignition switch OFF → ON. The counter remains at 39 even if the number of cycles exceeds it. It is counted from 1 again when turning ignition switch OFF → ON after returning to the normal condition if the malfunction is detected again.

CONSULT display	Fail-safe	Intelligent Key warning lamp ON	Reference page
No DTC is detected. further testing may be required.	—	—	—
U1000: CAN COMM CIRCUIT	—	—	DLK-38
U1010: CONTROL UNIT (CAN)	—	—	DLK-39

INTELLIGENT KEY UNIT

Reference Value - Intelligent Key Unit

INFOID:0000000001563598

TERMINAL LAYOUT

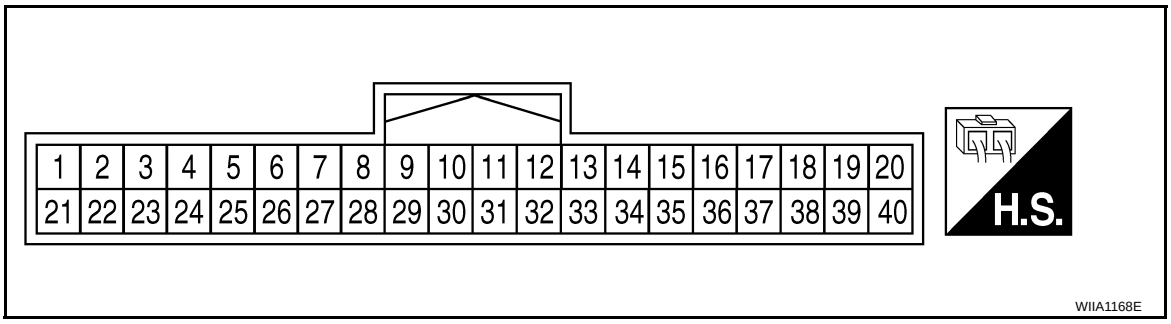

PHYSICAL VALUES

Terminal	Wire Color	Item	Condition			Voltage (V) Approx.
			Ignition Switch Position	Operation or Conditions		
1	O	Steering lock solenoid power supply	LOCK	—		5
2	L	CAN-H	—	—		—
3	P	CAN-L	—	—		—
4	GR	Intelligent Key warning buzzer (front of vehicle)	LOCK	Operate door request switch.	Buzzer OFF	Battery voltage
					Buzzer ON	0
5	LG	Front door request switch LH	—	Press front door request switch LH.		0
				Other than above		Battery voltage
6	W/G	Ignition switch (ON)	ON	—		Battery voltage
7	SB	Key switch	LOCK	Insert mechanical key into ignition key cylinder.		Battery voltage
				Remove mechanical key from ignition key cylinder.		0
8	O	Remote keyless entry receiver ground	—	—		0
9	R	Remote keyless entry receiver signal	—	When remote keyless entry receiver receives signal from keyfob.		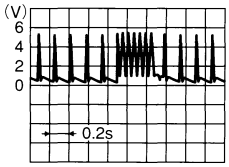
				Stand-by		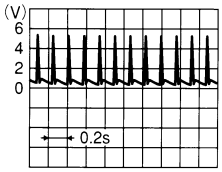
11	R/B	Power source (Fuse)	—	—		Battery voltage
12	B	Ground	—	—		0

Terminal	Wire Color	Item	Condition		Voltage (V) Approx.
			Ignition Switch Position	Operation or Conditions	
13	W	Inside key antenna 3 (center console) (+) signal	LOCK	Any door open → all doors closed	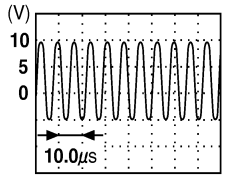 PIIB7441E
14	BR	Inside key antenna 3 (center console) (-) signal			
15	V	Inside key antenna 1 (instrument panel) (+) signal	LOCK	Any door open → all doors closed	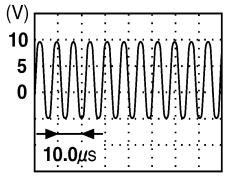 PIIB7441E
16	LG	Inside key antenna 1 (instrument panel) (-) signal			
17	R	Rear bumper antenna (+) signal	LOCK	Press back door request switch.	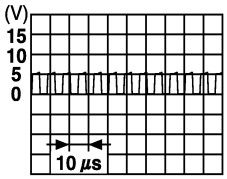 SIIA1910J
18	L	Rear bumper antenna (-) signal			
19	Y	Front outside antenna LH (+) signal	LOCK	Press front door request switch LH.	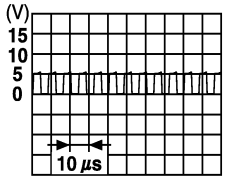 SIIA1910J
20	W	Front outside antenna LH (-) signal			
21	BR	Remote keyless entry receiver RSSI signal	—	—	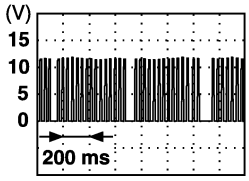 PIIA2344E
23	G	Back door control unit signal	—	Back door release switch ON.	0
				Back door release switch OFF.	Battery voltage
24	G	Back door release switch input	—	Back door release switch ON.	0
				Back door release switch OFF.	5
25	R	Front door request switch RH	—	Press front door request switch RH.	0
				Other than above	Battery voltage
27	G	Ignition knob switch	—	Press ignition switch.	Battery voltage
				Return ignition switch to LOCK position.	0
28	P	Unlock sensor (driver side)	—	Door (driver side) is locked.	5
				Door (driver side) is unlocked.	0

Terminal	Wire Color	Item	Condition		Voltage (V) Approx.
			Ignition Switch Position	Operation or Conditions	
30	W	Remote keyless entry receiver power supply	—	—	5
32	V	Steering lock solenoid communication signal	LOCK	When Intelligent Key is inside vehicle, press ignition knob switch.	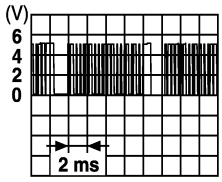 SIIA1911J
				Other than above	5
33	G	Inside key antenna 2 (luggage compartment) (+) signal	LOCK	Press ignition knob switch: ON (Ignition knob switch)	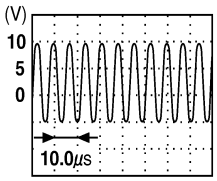 PIIB7441E
34	R	Inside key antenna 2 (luggage compartment) (-) signal			
37	P	Front outside antenna (+) signal RH	LOCK	Press front door request switch RH.	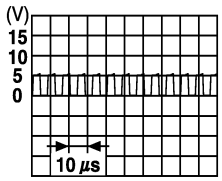 SIIA1910J
38	V	Front outside antenna (-) signal RH			
39	SB	P range switch	—	Selector lever is in “P” position.	0
				Other than above	Battery voltage
40	V	AS select unlock output	—	UNLOCK with rear door locks disabled.	0
				Other than above	Battery voltage

Reference Value - Steering Lock Solenoid

INFOID:0000000001563599

TERMINAL LAYOUT

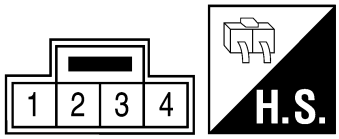

WIIA1169E

PHYSICAL VALUES

Terminal	Wire Color	Signal Designation	Condition		Voltage (V) Approx.
			Ignition Switch Position	Operation or Conditions	
1	R/B	Power source (fuse)	LOCK	—	Battery voltage
2	O	Steering lock solenoid power supply	LOCK	—	5
3	V	Steering lock solenoid communication signal	LOCK	When Intelligent Key is inside vehicle, press ignition knob switch.	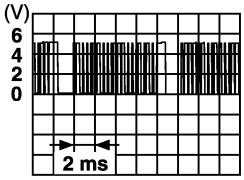 SIIA1911J
				Other than the above	5
4	SB	Steering lock solenoid ground	—	—	0

Wiring Diagram — INTELLIGENT KEY SYSTEM —

INFOID:0000000001563600

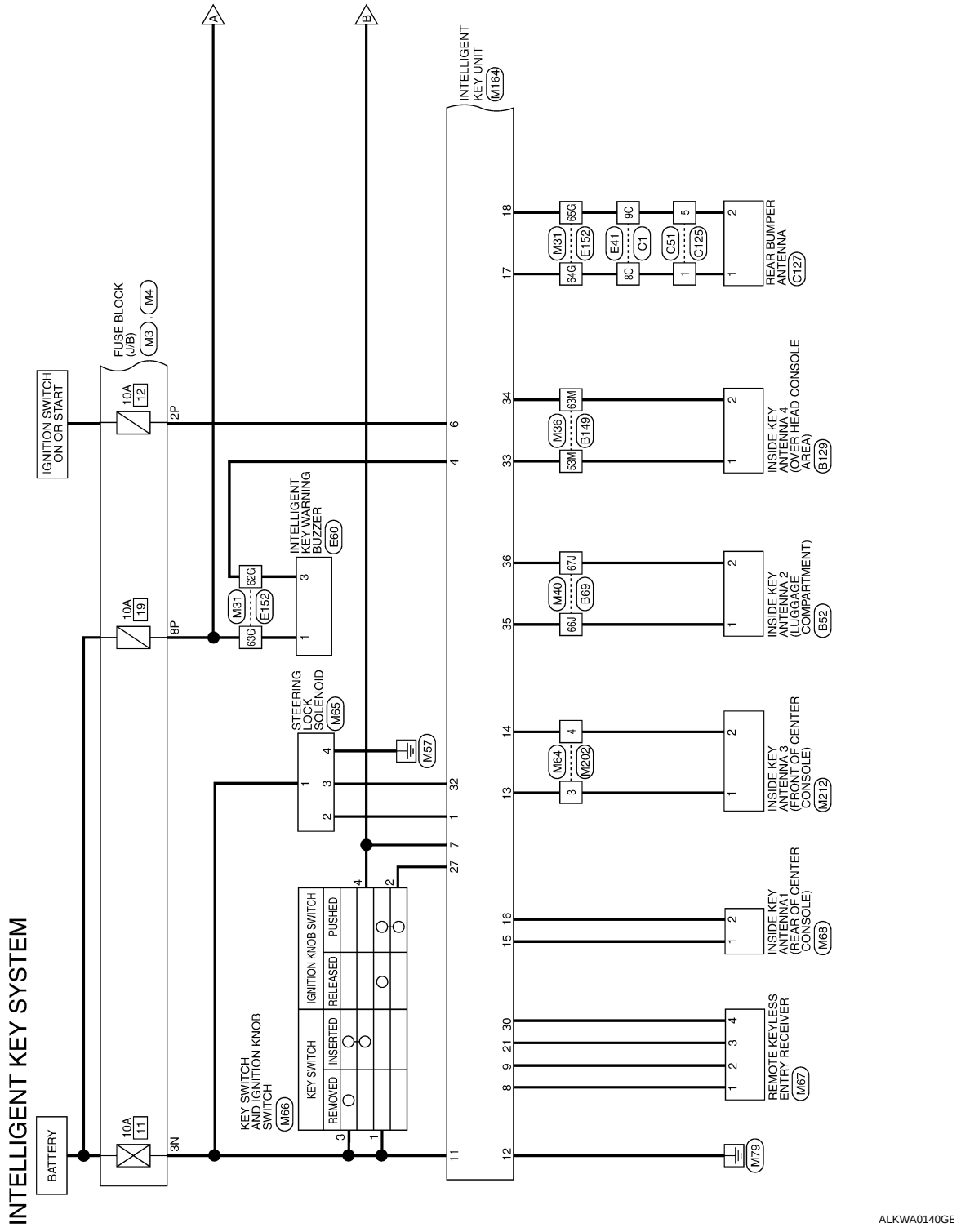

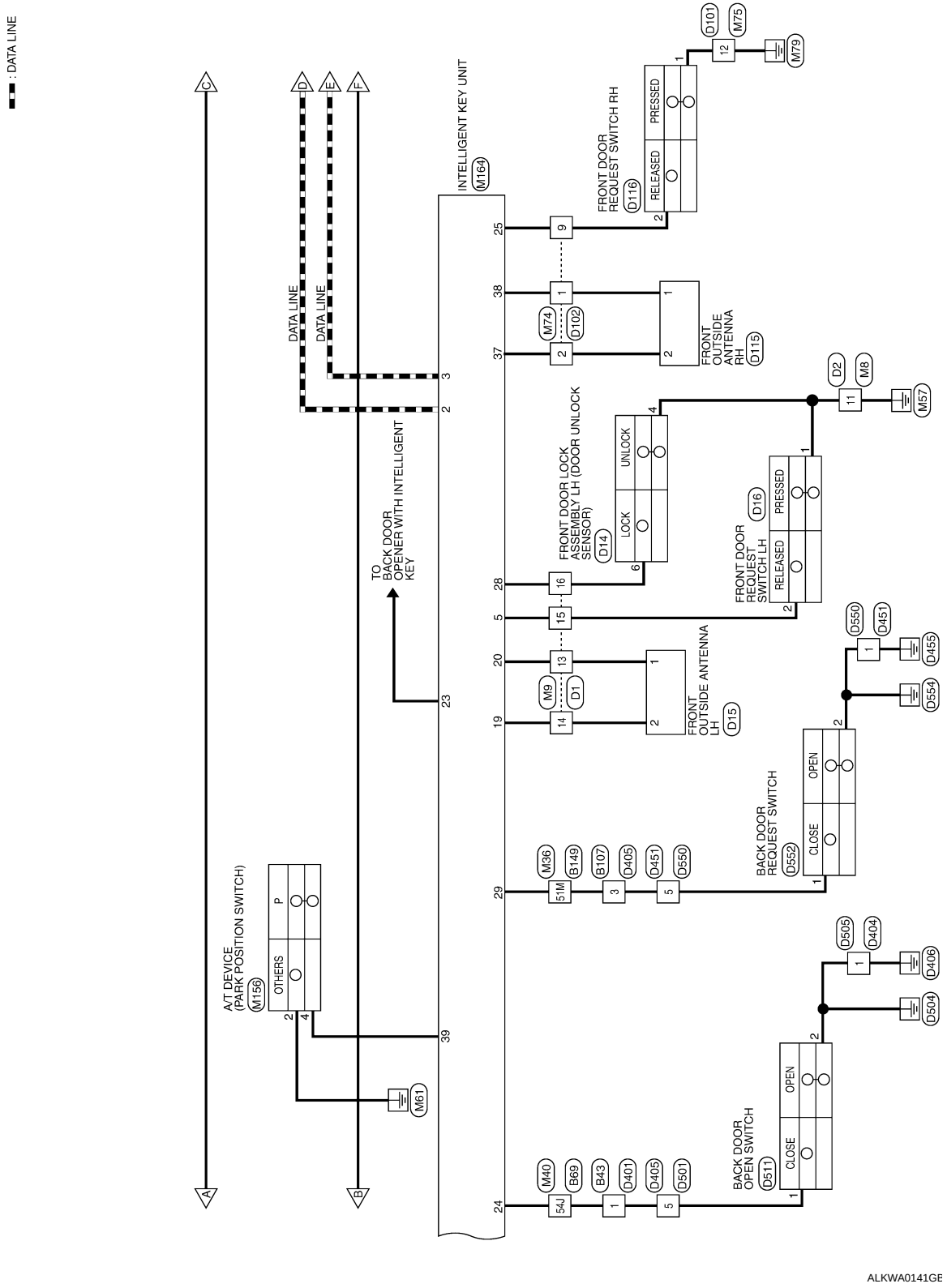
: DATA LINE
INTELLIGENT KEY UNIT
M164
DATA LINE
DATA LINE
TO BACK DOOR OPENER WITH INTELLIGENT KEY
FRONT DOOR REQUEST SWITCH RH
D116
RELEASED
PRESSED
D101
M75
M79
FRONT OUTSIDE ANTENNA RH
D115
M74
D102
FRONT DOOR LOCK ASSEMBLY LH (DOOR UNLOCK SENSOR)
D14
LOCK
UNLOCK
FRONT DOOR REQUEST SWITCH LH
D16
RELEASED
PRESSED
D2
M8
M57
FRONT OUTSIDE ANTENNA LH
D15
M9
D1
D550
D451
D455
D554
BACK DOOR REQUEST SWITCH
D552
CLOSE
OPEN
M36
51M
B149
B107
D405
D451
D550
A/T DEVICE (PARK POSITION SWITCH)
M156
OTHERS
P
M61
BACK DOOR OPEN SWITCH
D511
CLOSE
OPEN
D505
D404
D406
D504
M40
54J
B69
B43
D401
D405
D501
ALKWA0141GE

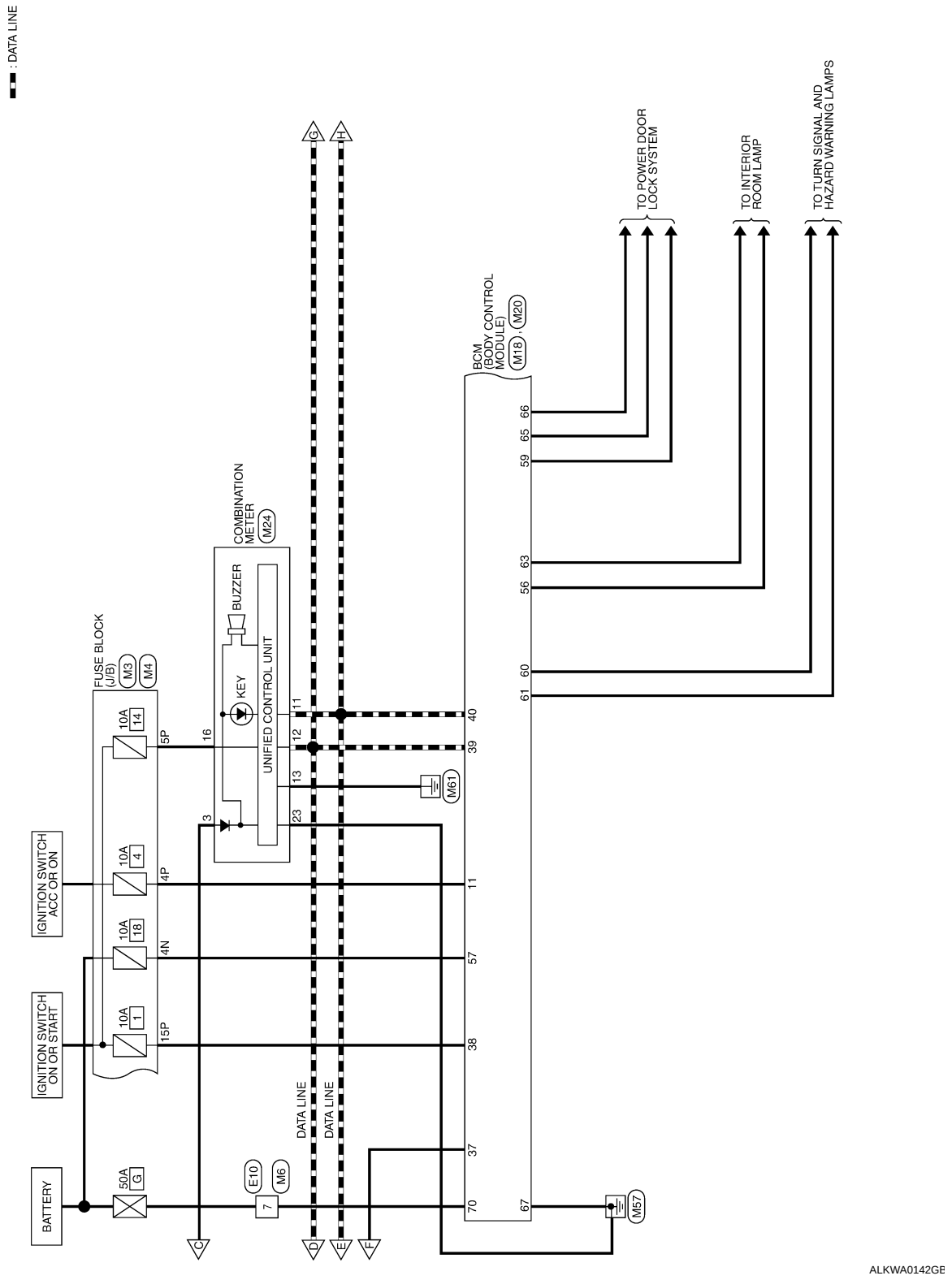
: DATA LINE
BATTERY
50A G
IGNITION SWITCH ON OR START
IGNITION SWITCH ACC OR ON
FUSE BLOCK (J/B)
M3
M4
10A 14
10A 4
10A 18
10A 1
5P
4P
4N
15P
16
3
COMBINATION METER
M24
BUZZER
KEY
UNIFIED CONTROL UNIT
11
12
13
23
E10
7
M6
DATA LINE
DATA LINE
C
D
E
F
G
H
M61
BCM (BODY CONTROL MODULE)
M18
M20
40
39
11
57
38
37
70
66
65
59
63
56
60
61
67
M57
TO POWER DOOR LOCK SYSTEM
TO INTERIOR ROOM LAMP
TO TURN SIGNAL AND HAZARD WARNING LAMPS
ALKWA0142GB

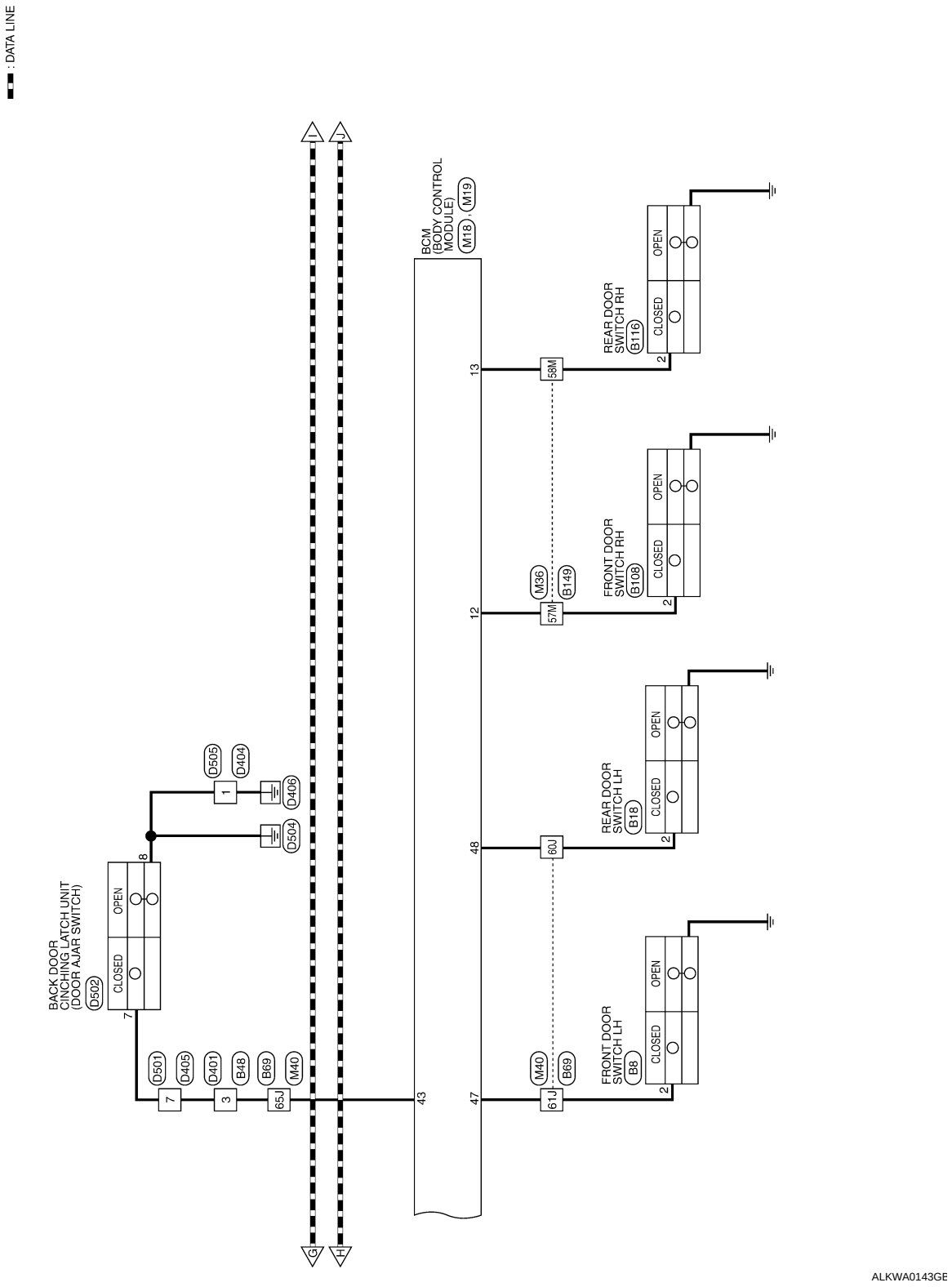
: DATA LINE
BACK DOOR CINCHING LATCH UNIT (DOOR AJAR SWITCH)
D502
CLOSED
OPEN
7
8
D501
D405
D401
B48
B69
M40
7
3
65J
D505
D404
1
D406
D504
G
H
43
BCM (BODY CONTROL MODULE)
M18
M19
47
48
12
13
61J
60J
57M
58M
M40
B69
M36
B149
FRONT DOOR SWITCH LH
B8
REAR DOOR SWITCH LH
B18
FRONT DOOR SWITCH RH
B108
REAR DOOR SWITCH RH
B116
2
ALKWA0143GE

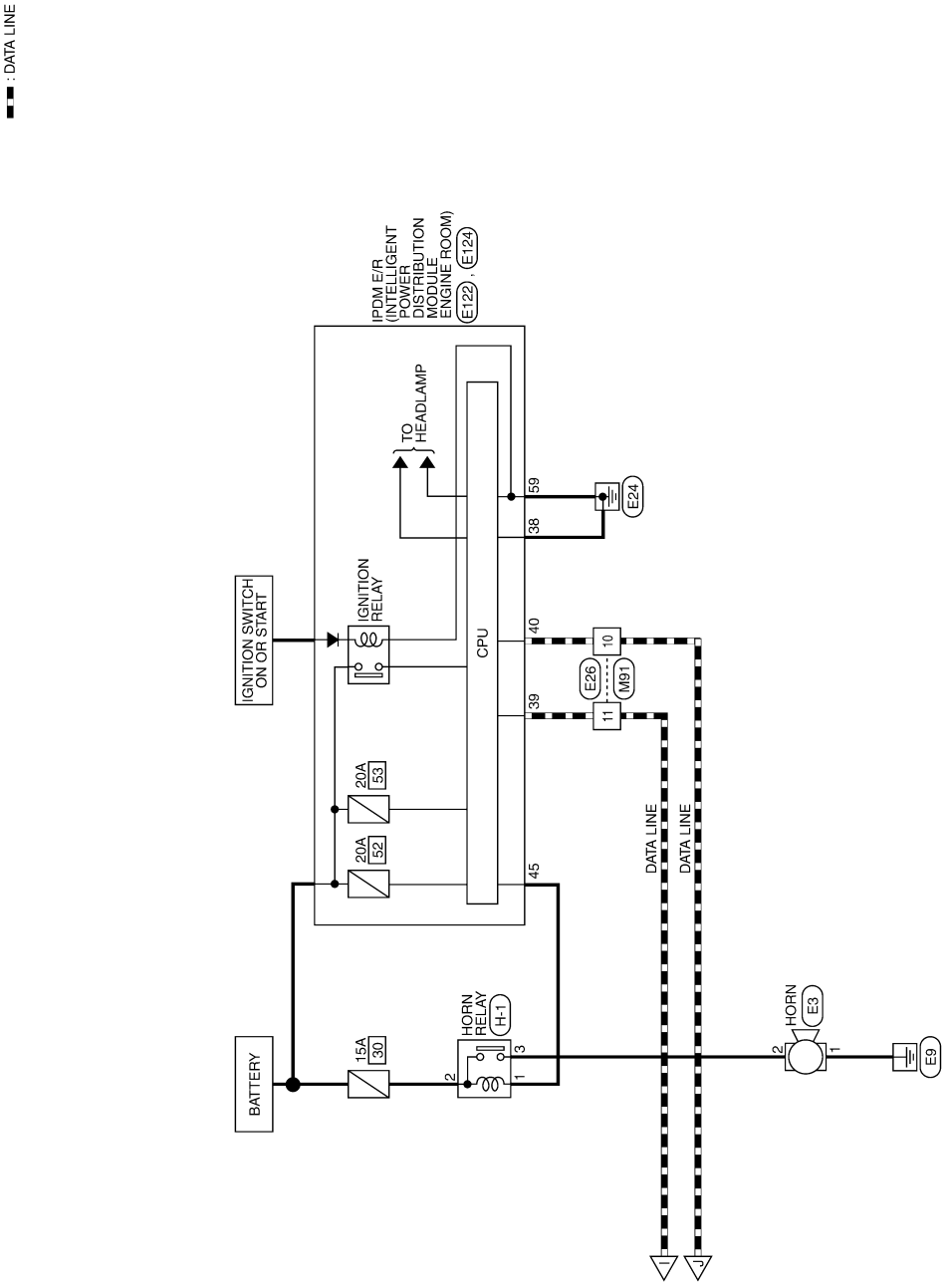

ALKWA0144GB

INTELLIGENT KEY SYSTEM CONNECTORS

Connector No.	M3
Connector Name	FUSE BLOCK (J/B)
Connector Color	WHITE

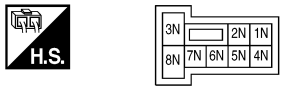

Terminal No.	Color of Wire	Signal Name
3N	R/B	–
4N	R/Y	–

Connector No.	M4
Connector Name	FUSE BLOCK (J/B)
Connector Color	WHITE

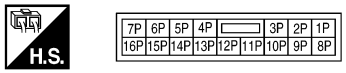

Terminal No.	Color of Wire	Signal Name
2P	W/G	–
4P	G/B	–
5P	W/G	–
8P	R/Y	–
15P	W/R	–

Connector No.	M6
Connector Name	WIRE TO WIRE
Connector Color	WHITE

Terminal No.	Color of Wire	Signal Name
7	W	–

Connector No.	M8
Connector Name	WIRE TO WIRE
Connector Color	WHITE

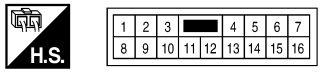

Terminal No.	Color of Wire	Signal Name
11	B	–

Connector No.	M9
Connector Name	WIRE TO WIRE
Connector Color	WHITE

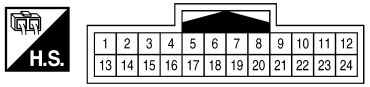

Terminal No.	Color of Wire	Signal Name
13	W	–
14	Y	–
15	LG	–
16	P	–

ALKIA0968GB

Connector No.	M18
Connector Name	BCM (BODY CONTROL MODULE)
Connector Color	WHITE

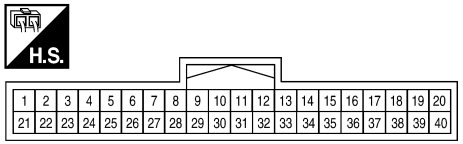

Terminal No.	Color of Wire	Signal Name
11	G/B	ACC SW
12	LG	DOOR SW (AS)
13	L	DOOR SW (RR)
37	B	KEY SW
38	W/R	IGN SW
39	L	CAN-H
40	P	CAN-L

Connector No.	M19
Connector Name	BCM (BODY CONTROL MODULE)
Connector Color	WHITE

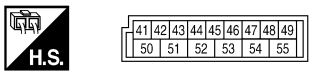

Terminal No.	Color of Wire	Signal Name
43	SB	BACK DOOR SW
47	GR	DOOR SW (DR)
48	P	DOOR SW (RL)

Connector No.	M20
Connector Name	BCM (BODY CONTROL MODULE)
Connector Color	BLACK

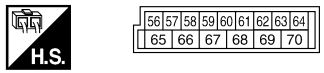

Terminal No.	Color of Wire	Signal Name
56	V	BAT SAVER
57	R/Y	BAT (FUSE)
59	GR	DOOR UNLOCK OUTPUT (DR)
60	LG	FLASHER OUTPUT (LEFT)

Terminal No.	Color of Wire	Signal Name
61	G	FLASHER OUTPUT (RIGHT)
63	BR	ROOM LAMP
65	V	DOOR LOCK OUTPUT (ALL)
66	L	DOOR UNLOCK OUTPUT (OTHER)
67	B	GND (POWER)
70	W	BAT (F/L)

ALKIA0969GB

Connector No.	M24
Connector Name	COMBINATION METER
Connector Color	WHITE

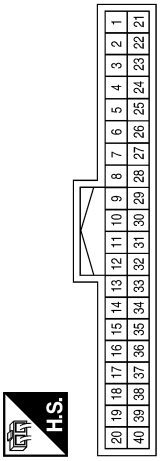

Terminal No.	Color of Wire	Signal Name
3	R/Y	–
11	P	–
12	L	–
13	GR	–
16	W/G	–
23	B	–

Connector No.	M31
Connector Name	WIRE TO WIRE
Connector Color	WHITE

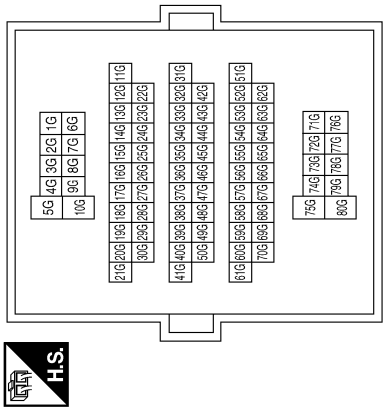

Terminal No.	Color of Wire	Signal Name
62G	GR	–
63G	R/B	–
64G	R	–
65G	L	–

ALKIA0970GB

Connector No.	M36
Connector Name	WIRE TO WIRE
Connector Color	WHITE

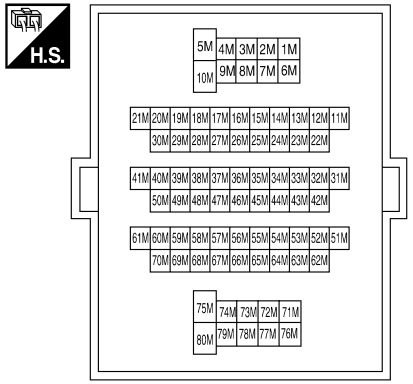

Terminal No.	Color of Wire	Signal Name
51M	GR	–
53M	G	–
57M	LG	–
58M	L	–
63M	R	–

Connector No.	M40
Connector Name	WIRE TO WIRE
Connector Color	WHITE

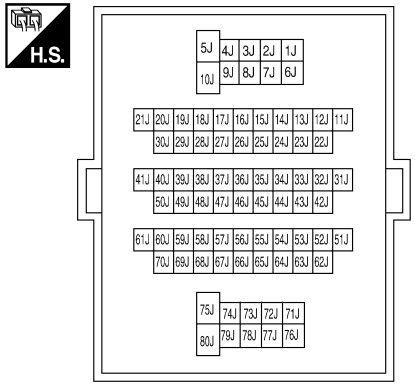

Terminal No.	Color of Wire	Signal Name
54J	W	–
60J	P	–
61J	GR	–
65J	SB	–
66J	L	–
67J	O	–

Connector No.	M64
Connector Name	WIRE TO WIRE
Connector Color	WHITE

Terminal No.	Color of Wire	Signal Name
3	W	–
4	BR	–

ALKIA0971GB

Connector No.	M65
Connector Name	STEERING LOCK SOLENOID
Connector Color	WHITE

Terminal No.	Color of Wire	Signal Name
1	R/B	+B
2	O	+5V
3	V	SIG
4	SB	GND

Connector No.	M66
Connector Name	KEY SWITCH AND IGNITION KNOB SWITCH
Connector Color	GRAY

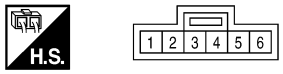

Terminal No.	Color of Wire	Signal Name
1	R	–
2	G	–
3	R/B	–
4	SB	–

Connector No.	M67
Connector Name	REMOTE KEYLESS ENTRY RECEIVER
Connector Color	WHITE

Terminal No.	Color of Wire	Signal Name
1	O	–
2	R	–
3	BR	–
4	W	–

Connector No.	M68
Connector Name	INSIDE KEY ANTENNA 1 (REAR OF CENTER CONSOLE)
Connector Color	GRAY

Terminal No.	Color of Wire	Signal Name
1	V	–
2	LG	–

Connector No.	M74
Connector Name	WIRE TO WIRE
Connector Color	WHITE

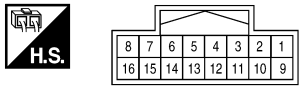

Terminal No.	Color of Wire	Signal Name
1	V	–
2	P	–
9	R	–

Connector No.	M75
Connector Name	WIRE TO WIRE
Connector Color	WHITE

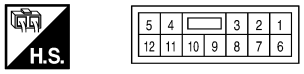

Terminal No.	Color of Wire	Signal Name
12	B	–

ALKIA0972GB

Connector No.	M91
Connector Name	WIRE TO WIRE
Connector Color	WHITE

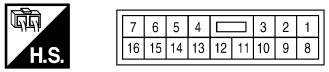

Terminal No.	Color of Wire	Signal Name
10	P	–
11	L	–

Connector No.	M156
Connector Name	A/T DEVICE (WITHOUT MANUAL MODE SWITCH)
Connector Color	WHITE

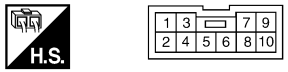

Terminal No.	Color of Wire	Signal Name
2	B	–
4	SB	–

Connector No.	M164
Connector Name	INTELLIGENT KEY UNIT
Connector Color	WHITE

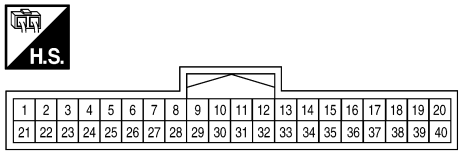

Terminal No.	Color of Wire	Signal Name
1	O	5V-POWER
2	L	CAN-H
3	P	CAN-L
4	GR	BUZZER_DR_OUTPUT
5	LG	DR_REQUEST_SW

Terminal No.	Color of Wire	Signal Name
6	W/G	IGN_SW_INPUT
7	SB	KEY_SW_INPUT
8	O	GND
9	R	SINGAL
11	R/B	BAT
12	B	GND
13	W	ANT_2(+)
14	BR	ANT_2(-)
15	V	ANT_1(+)
16	LG	ANT_1(-)
17	R	RR_BUMPER_ANT(+)
18	L	RR_BUMPER_ANT(-)
19	Y	DR_ANTENNA_(+)
20	W	DR_ANTENNA_(-)
21	BR	RSSI

Terminal No.	Color of Wire	Signal Name
23	G	BACKDOOR_AUTO_ CLOSURE
25	R	AS_REQUEST_SW
27	G	PUSH_SW_INPUT
28	P	DR_STATUS_SW_ INPUT
30	W	5V
32	V	STRG_LOCK_SIG
33	G	3RD_ROW_ANT(+)
34	R	3RD_ROW_ANT(-)
35	L	2ND_ROW_ANT+
36	O	2ND_ROW_ANT-
37	P	AS_ANTENNA_(+)
38	V	AS_ANTENNA_(-)
39	SB	P_RANGE_SW

ALKIA0973GB

Connector No.	M202
Connector Name	WIRE TO WIRE
Connector Color	WHITE

Terminal No.	Color of Wire	Signal Name
3	W	–
4	BR	–

Connector No.	M212
Connector Name	INSIDE KEY ANTENNA 3 (FRONT OF CENTER CONSOLE)
Connector Color	GRAY

Terminal No.	Color of Wire	Signal Name
1	W	–
2	BR	–

Connector No.	E3
Connector Name	HORN
Connector Color	BLACK

Terminal No.	Color of Wire	Signal Name
1	B	–
2	G	–

Connector No.	E10
Connector Name	WIRE TO WIRE
Connector Color	WHITE

Terminal No.	Color of Wire	Signal Name
7	W	–

Connector No.	E26
Connector Name	WIRE TO WIRE
Connector Color	WHITE

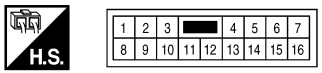

Terminal No.	Color of Wire	Signal Name
10	P	–
11	L	–

Connector No.	E41
Connector Name	WIRE TO WIRE
Connector Color	BLACK

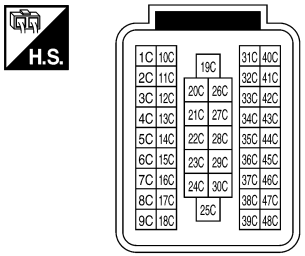

Terminal No.	Color of Wire	Signal Name
8C	R	–
9C	L	–

ALKIA0974GB

Connector No.	E60
Connector Name	INTELLIGENT KEY WARNING BUZZER
Connector Color	BROWN

Terminal No.	Color of Wire	Signal Name
1	R/B	–
3	GR	–

Connector No.	E122
Connector Name	IPDM E/R (INTELLIGENT POWER DISTRIBUTION MODULE ENGINE ROOM)
Connector Color	WHITE

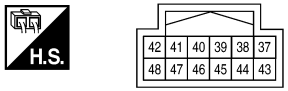

Terminal No.	Color of Wire	Signal Name
38	B	GND (SIGNAL)
39	L	CAN-H
40	P	CAN-L
45	LG	HORN RLY

Connector No.	E124
Connector Name	IPDM E/R (INTELLIGENT POWER DISTRIBUTION MODULE ENGINE ROOM)
Connector Color	BLACK

Terminal No.	Color of Wire	Signal Name
59	B	GND (POWER)

Connector No.	E152
Connector Name	WIRE TO WIRE
Connector Color	WHITE

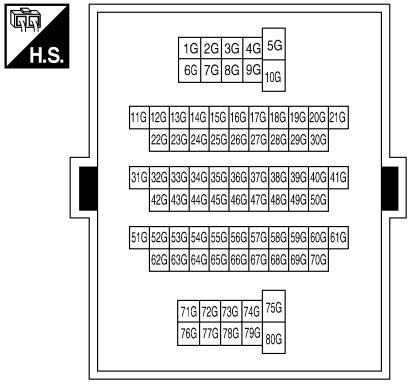

Terminal No.	Color of Wire	Signal Name
62G	GR	–
63G	R/B	–
64G	R	–
65G	L	–

Connector No.	C1
Connector Name	WIRE TO WIRE
Connector Color	BLACK

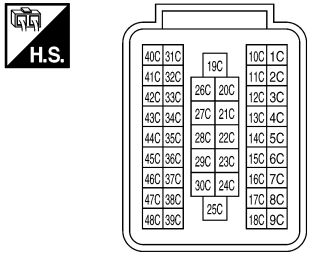

Terminal No.	Color of Wire	Signal Name
8C	R	–
9C	L	–

ALKIA0975GB

Connector No.	C51
Connector Name	WIRE TO WIRE
Connector Color	GRAY

Terminal No.	Color of Wire	Signal Name
1	R	–
5	L	–

Connector No.	C125
Connector Name	WIRE TO WIRE
Connector Color	GRAY

Terminal No.	Color of Wire	Signal Name
1	R	–
5	L	–

Connector No.	C127
Connector Name	REAR BUMPER ANTENNA
Connector Color	GRAY

Terminal No.	Color of Wire	Signal Name
1	R	–
2	L	–

Connector No.	B8
Connector Name	FRONT DOOR SWITCH LH
Connector Color	WHITE

Terminal No.	Color of Wire	Signal Name
2	GR	–

Connector No.	B18
Connector Name	REAR DOOR SWITCH LH
Connector Color	WHITE

Terminal No.	Color of Wire	Signal Name
2	P	–

Connector No.	B43
Connector Name	WIRE TO WIRE
Connector Color	WHITE

Terminal No.	Color of Wire	Signal Name
1	W	–
3	SB	–

ALKIA0976GB

Connector No.	B52
Connector Name	INSIDE KEY ANTENNA 2 (LUGGAGE COMPARTMENT)
Connector Color	GRAY

Terminal No.	Color of Wire	Signal Name
1	L	–
2	O	–

Connector No.	B69
Connector Name	WIRE TO WIRE
Connector Color	WHITE

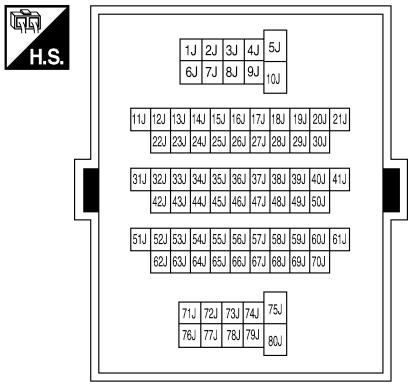

Terminal No.	Color of Wire	Signal Name
54J	W	–
60J	P	–
61J	GR	–
65J	SB	–
66J	L	–
67J	O	–

Connector No.	B107
Connector Name	WIRE TO WIRE
Connector Color	WHITE

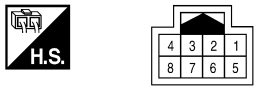

Terminal No.	Color of Wire	Signal Name
3	GR	–

Connector No.	B108
Connector Name	FRONT DOOR SWITCH RH
Connector Color	WHITE

Terminal No.	Color of Wire	Signal Name
2	LG	–

Connector No.	B116
Connector Name	REAR DOOR SWITCH RH
Connector Color	WHITE

Terminal No.	Color of Wire	Signal Name
2	L	–

ALKIA0977GB

Connector No.	B129
Connector Name	INSIDE KEY ANTENNA 4 (OVERHEAD CONSOLE AREA)
Connector Color	GRAY

H.S.

Terminal No.	Color of Wire	Signal Name
1	G	–
2	R	–

Connector No.	B149
Connector Name	WIRE TO WIRE
Connector Color	WHITE

H.S.

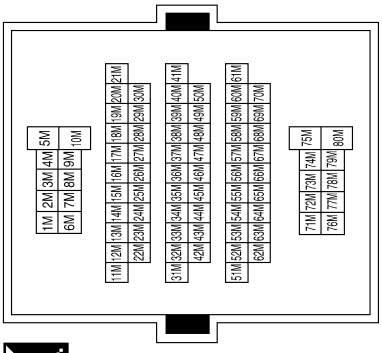

Terminal No.	Color of Wire	Signal Name
51M	GR	–
53M	G	–
57M	LG	–
58M	L	–
63M	R	–

Connector No.	D1
Connector Name	WIRE TO WIRE
Connector Color	WHITE

H.S.

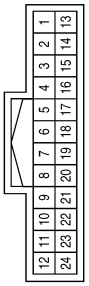

Terminal No.	Color of Wire	Signal Name
13	W	–
14	Y	–
15	LG	–
16	P	–

Connector No.	D2
Connector Name	WIRE TO WIRE
Connector Color	WHITE

H.S.

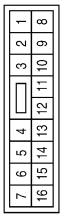

Terminal No.	Color of Wire	Signal Name
11	B	–

Connector No.	D14
Connector Name	FRONT DOOR LOCK ASSEMBLY LH
Connector Color	GRAY

H.S.

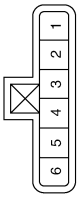

Terminal No.	Color of Wire	Signal Name
4	B	–
6	P	–

ALKIA0978GB

Connector No.	D101
Connector Name	WIRE TO WIRE
Connector Color	WHITE

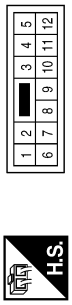

Terminal No.	Color of Wire	Signal Name
12	B	–

Connector No.	D16
Connector Name	FRONT DOOR REQUEST SWITCH LH
Connector Color	GRAY

Terminal No.	Color of Wire	Signal Name
1	B	SW-
2	LG	SW+

Connector No.	D15
Connector Name	FRONT OUTSIDE ANTENNA LH
Connector Color	GRAY

Terminal No.	Color of Wire	Signal Name
1	W	ANT-
2	Y	ANT+

Connector No.	D116
Connector Name	FRONT DOOR REQUEST SWITCH RH
Connector Color	GRAY

Terminal No.	Color of Wire	Signal Name
1	B	SW-
2	R	SW+

Connector No.	D115
Connector Name	FRONT OUTSIDE ANTENNA RH
Connector Color	GRAY

Terminal No.	Color of Wire	Signal Name
1	V	ANT+
2	P	ANT-

Connector No.	D102
Connector Name	WIRE TO WIRE
Connector Color	WHITE

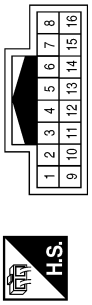

Terminal No.	Color of Wire	Signal Name
1	V	–
2	P	–
9	R	–

ALKIA0979GB

Connector No.	D401
Connector Name	WIRE TO WIRE
Connector Color	WHITE

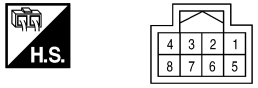

Terminal No.	Color of Wire	Signal Name
1	W	–
3	SB	–

Connector No.	D404
Connector Name	WIRE TO WIRE
Connector Color	WHITE

Terminal No.	Color of Wire	Signal Name
1	B	–

Connector No.	D405
Connector Name	WIRE TO WIRE
Connector Color	WHITE

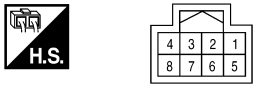

Terminal No.	Color of Wire	Signal Name
5	W	–
7	SB	–

Connector No.	D450
Connector Name	WIRE TO WIRE
Connector Color	WHITE

Terminal No.	Color of Wire	Signal Name
3	GR	–

Connector No.	D451
Connector Name	WIRE TO WIRE
Connector Color	WHITE

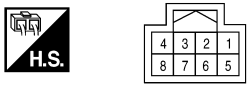

Terminal No.	Color of Wire	Signal Name
5	GR	–

Connector No.	D501
Connector Name	WIRE TO WIRE
Connector Color	WHITE

Terminal No.	Color of Wire	Signal Name
5	W	–
7	SB	–

ALKIA0980GB

Connector No.	D502
Connector Name	BACK DOOR CINCHING LATCH UNIT
Connector Color	WHITE

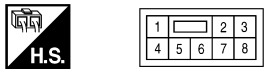

Terminal No.	Color of Wire	Signal Name
7	SB	–
8	B	–

Connector No.	D505
Connector Name	WIRE TO WIRE
Connector Color	WHITE

Terminal No.	Color of Wire	Signal Name
1	B	–

Connector No.	D511
Connector Name	BACK OPEN SWITCH
Connector Color	BROWN

Terminal No.	Color of Wire	Signal Name
1	W	–
2	B	–

Connector No.	D550
Connector Name	WIRE TO WIRE
Connector Color	WHITE

Terminal No.	Color of Wire	Signal Name
5	GR	–

Connector No.	D552
Connector Name	BACK DOOR REQUEST SWITCH
Connector Color	GRAY

Terminal No.	Color of Wire	Signal Name
1	GR	–
2	B	–

ALKIA0981GB

Connector No.	H-1
Connector Name	FUSE AND FUSIBLE LINK BOX
Connector Color	–

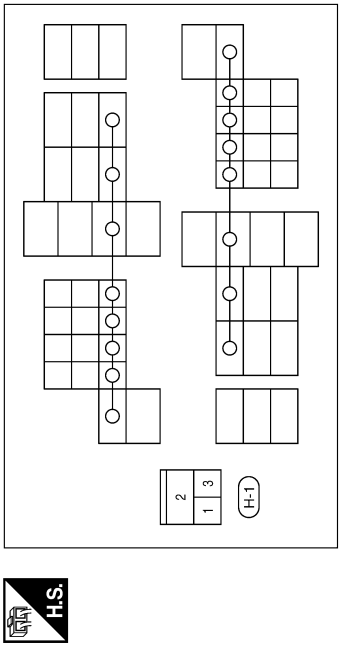

Terminal No.	Color of Wire	Signal Name
1	BR	–
2	O	–
3	G	–

ALKIA1205GB

Fail Safe

INFOID:0000000001563601

Fail-safe operation

The Intelligent Key system operation will be interrupted if the Intelligent Key unit loses power or communication with the BCM.

BACK DOOR CONTROL UNIT

Reference Value

INFOID:0000000001563602

TERMINAL LAYOUT

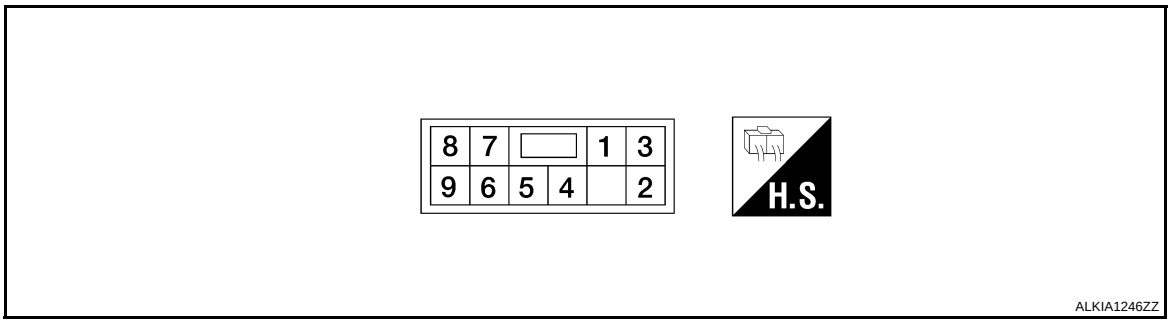

PHYSICAL VALUES

Terminal	Wire Color	Item	Condition	Voltage (V) (Approx.)
1	R/B	Battery power supply	—	Battery voltage
2	Y	Back door cinching latch unit motor	Back door closing	Battery voltage
			Back door opening	0
3	L	Back door cinching latch unit motor	Back door closing	0
			Back door opening	Battery voltage
4	B	Ground	—	—
5	GR	Ground	—	—
6	G	Intelligent Key unit output	Back door release switch ON	0
			Back door release switch OFF	Battery voltage
7	BR	Half switch signal	Back door open	0
			Back door closed or latching	Battery voltage
8	P	Close switch signal	Back door open or closed	Battery voltage
			During opening (5 seconds)	0
9	W	Neutral switch signal	Back door open or closed	Battery voltage
			During opening (5 seconds)	0

Wiring Diagram—BACK DOOR OPENER—

INFOID:0000000001563603

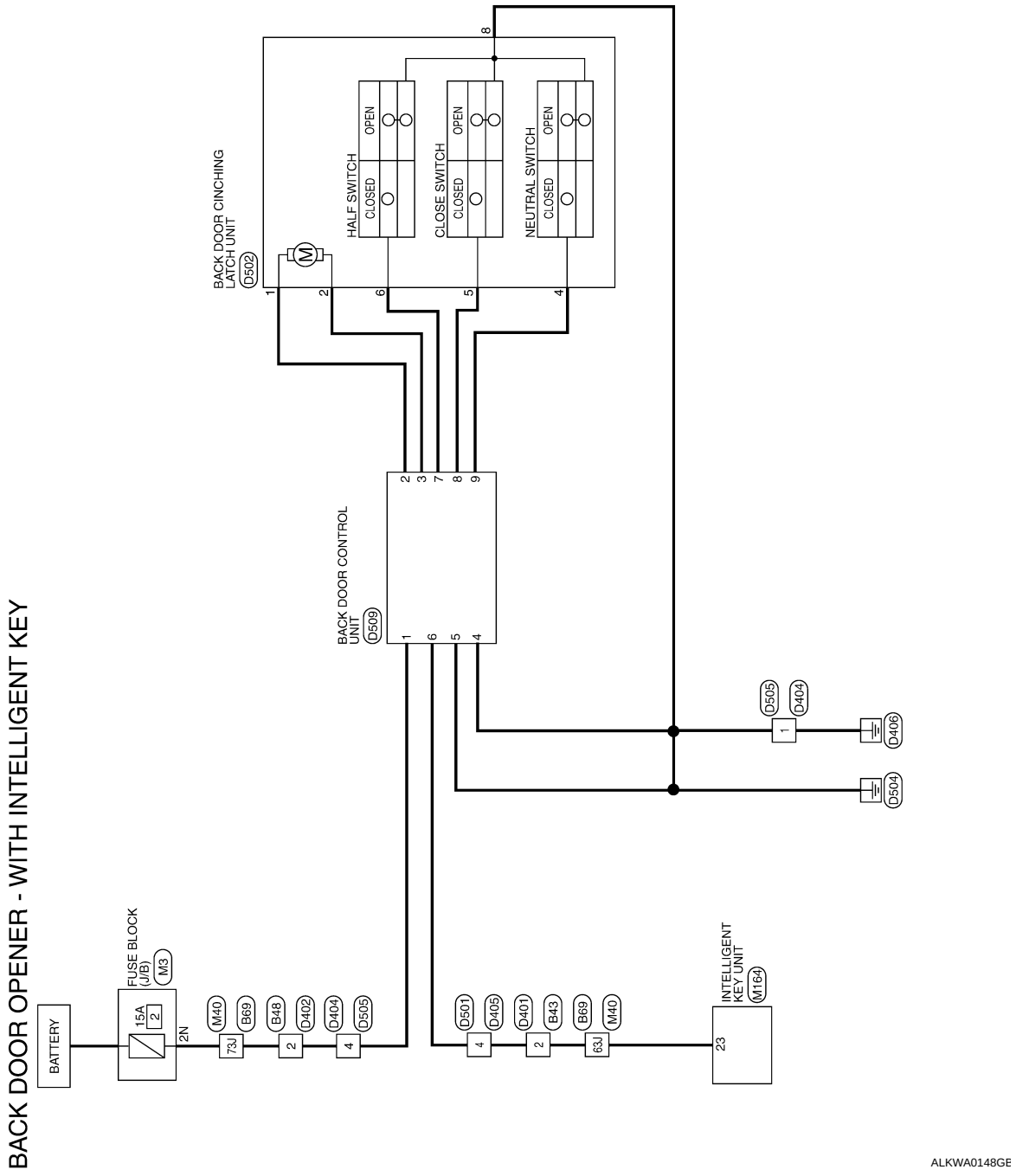

BACK DOOR OPENER - WITH INTELLIGENT KEY CONNECTORS

Connector No.	M3
Connector Name	FUSE BLOCK (J/B)
Connector Color	WHITE

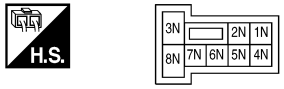

Terminal No.	Color of Wire	Signal Name
2N	R/B	–

Connector No.	M40
Connector Name	WIRE TO WIRE
Connector Color	WHITE

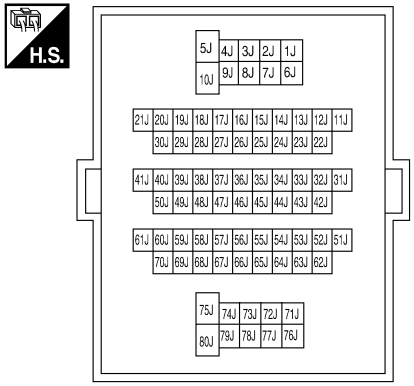

Terminal No.	Color of Wire	Signal Name
63J	G	–
73J	R/B	–

Connector No.	M164
Connector Name	INTELLIGENT KEY UNIT
Connector Color	WHITE

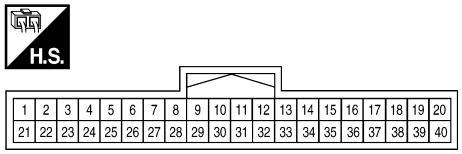

Terminal No.	Color of Wire	Signal Name
23	G	BACKDOOR_AUTO_ CLOSURE

Connector No.	B43
Connector Name	WIRE TO WIRE
Connector Color	WHITE

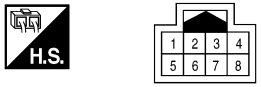

Terminal No.	Color of Wire	Signal Name
2	G	–

Connector No.	B48
Connector Name	WIRE TO WIRE
Connector Color	WHITE

Terminal No.	Color of Wire	Signal Name
2	R/B	–

ALKIA0995GB

Connector No.	B69
Connector Name	WIRE TO WIRE
Connector Color	WHITE

H.S.

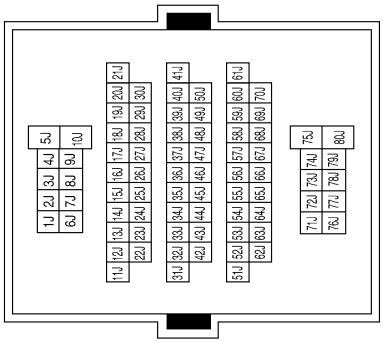

Terminal No.	Color of Wire	Signal Name
63J	G	–
73J	R/B	–

Connector No.	D401
Connector Name	WIRE TO WIRE
Connector Color	WHITE

H.S.

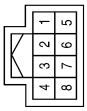

Terminal No.	Color of Wire	Signal Name
2	G	–

Connector No.	D402
Connector Name	WIRE TO WIRE
Connector Color	WHITE

H.S.

Terminal No.	Color of Wire	Signal Name
2	R/B	–

Connector No.	D404
Connector Name	WIRE TO WIRE
Connector Color	WHITE

H.S.

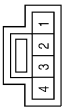

Terminal No.	Color of Wire	Signal Name
1	B	–
4	R/B	–

Connector No.	D405
Connector Name	WIRE TO WIRE
Connector Color	WHITE

H.S.

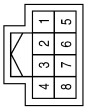

Terminal No.	Color of Wire	Signal Name
4	G	–

ALKIA0996GB

Connector No.	D501
Connector Name	WIRE TO WIRE
Connector Color	WHITE

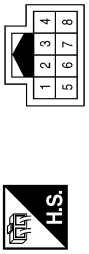

Terminal No.	Color of Wire	Signal Name
4	G	–

Connector No.	D502
Connector Name	BACK DOOR CINCHING LATCH UNIT
Connector Color	WHITE

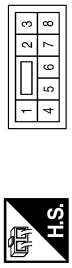

Terminal No.	Color of Wire	Signal Name
1	Y	–
2	L	–
4	W	–
5	P	–
6	BR	–
8	B	–

Connector No.	D505
Connector Name	WIRE TO WIRE
Connector Color	WHITE

Terminal No.	Color of Wire	Signal Name
1	B	–
4	R/B	–

Connector No.	D509
Connector Name	BACK DOOR CONTROL UNIT
Connector Color	WHITE

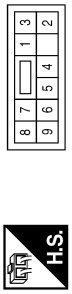

Terminal No.	Color of Wire	Signal Name
1	R/B	–
2	Y	–
3	L	–
4	B	–
5	GR	–
6	G	–
7	BR	–
8	P	–
9	W	–

ALKIA0997GB

Fail Safe

INFOID:0000000001563604

Fail-safe operation

The back door system operation will be interrupted if the back door control unit loses power.

HOMELINK UNIVERSAL TRANSCEIVER

Wiring Diagram

INFOID:0000000001563605

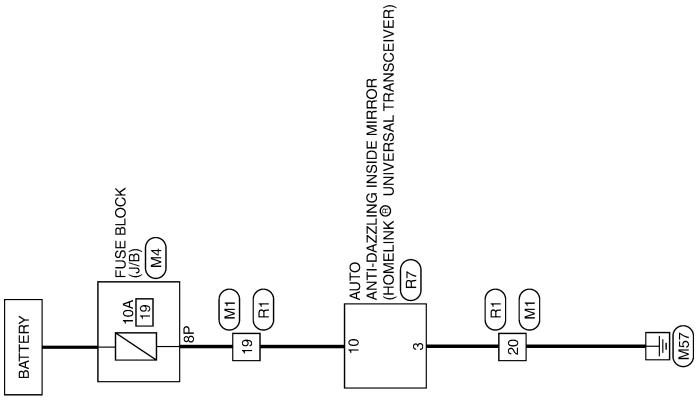

INTEGRATED HOMELINK TRANSMITTER

ALKWA0149GE

INTEGRATED HOMELINK TRANSMITTER CONNECTORS

Connector No.	M1
Connector Name	WIRE TO WIRE
Connector Color	WHITE

H.S.

1	2	3	4	5	6	7	8	9	10	11	12
13	14	15	16	17	18	19	20	21	22	23	24

Terminal No.	Color of Wire	Signal Name
19	R/Y	–
20	B	–

Connector No.	M4
Connector Name	FUSE BLOCK (J/B)
Connector Color	WHITE

H.S.

7P	6P	5P	4P		3P	2P	1P
16P	15P	14P	13P	12P	11P	10P	9P	8P

Terminal No.	Color of Wire	Signal Name
8P	R/Y	–

Connector No.	R1
Connector Name	WIRE TO WIRE
Connector Color	WHITE

H.S.

12	11	10	9	8	7	6	5	4	3	2	1
24	23	22	21	20	19	18	17	16	15	14	13

Terminal No.	Color of Wire	Signal Name
19	R/Y	–
20	B	–

Connector No.	R7
Connector Name	AUTO ANTI-DAZZLING INSIDE MIRROR
Connector Color	BLACK

H.S.

5	4	3	2	1
10	9	8	7	6

Terminal No.	Color of Wire	Signal Name
3	B	GND
10	R/Y	B

ALKIA0998GB

SYMPTOM DIAGNOSIS

INTELLIGENT KEY SYSTEM SYMPTOMS

Symptom Table

INFOID:0000000001563606

ALL FUNCTIONS OF INTELLIGENT KEY SYSTEM DO NOT OPERATE

NOTE:

- Before performing the diagnosis in the following table, check “WORK FLOW”. Refer to DLK-8, "Work Flow".
- Check that vehicle is under the condition shown in “Conditions of vehicle” before starting diagnosis, and check each symptom.
- If the following symptoms are detected, check systems shown in the “Diagnosis/service procedure” column in this order.

Conditions of Vehicle (Operating Conditions)

- “ENGINE START BY I-KEY” and “LOCK/UNLOCK BY I-KEY” are ON when setting on CONSULT-III.
- All doors are closed.

Symptom	Diagnosis/service procedure	Reference page
All doors and ignition switch do not respond to Intelligent Key comand.	1. Check Intelligent Key function and battery inspection.	DLK-87
	2. Check Intelligent Key unit power supply and ground circuit.	DLK-46
	3. Check remote keyless entry receiver.	DLK-84
	4. Check BCM power supply and ground circuit.	DLK-46
	5. Replace Intelligent Key unit.	DLK-87

DOOR LOCK FUNCTION SYMPTOMS

DOOR LOCK AND UNLOCK SWITCH

DOOR LOCK AND UNLOCK SWITCH : Symptom Table

INFOID:0000000001563607

DOOR LOCK/UNLOCK FUNCTION MALFUNCTION

NOTE:

- Before performing the diagnosis in the following table, check “WORK FLOW”. Refer to DLK-8, "Work Flow".
- Check that vehicle is under the condition shown in “Conditions of vehicle” before starting diagnosis, and check each symptom.
- If the following symptoms are detected, check systems shown in the “Diagnosis/service procedure” column in this order.

Conditions of Vehicle (Operating Conditions)

- “LOCK/UNLOCK BY I-KEY” is ON when setting on CONSULT-III.
- Ignition switch is not depressed.
- All doors are closed.

Symptom	Diagnosis/service procedure	Reference page
Power door lock does not operate with door lock and unlock switch.	1. Check BCM Power supply and ground circuit.	BCS-32
	2. Check door lock and unlock switch.	DLK-51
	3. Check door lock actuator (driver side)	DLK-64
	4. Check Intermittent Incident.	GI-51
Power door lock does not operate with door key cylinder operation. (Power door lock operate properly with door lock and unlock switch.)	1. Check key cylinder switch.	DLK-55
	2. Replace power window main switch.	PWC-70
Specific door lock actuator does not operate.	1a. Check driver side door lock actuator.	DLK-64
	1b. Check passenger side door lock actuator.	DLK-65
	1c. Check rear LH side door lock actuator.	DLK-66
	1d. Check rear RH side door lock actuator.	DLK-68
	1e. Check back door lock actuator.	DLK-69
	2. Check Intermittent Incident.	GI-51
Door lock/unlock do not operate by request switch.	1. Door switch check.	DLK-48
	2. Ignition knob switch check.	DLK-97
	3. Replace Intelligent Key unit.	SEC-93
Door lock/unlock does not operate by request switch (LH side).	1. Front door request switch LH check.	DLK-59
	2. Front outside antenna LH check.	DLK-78
	3. Replace Intelligent Key unit.	SEC-93
Door lock/unlock does not operate by request switch (RH side).	1. Front door request switch RH check.	DLK-59
	2. Front outside antenna RH check.	DLK-78
	3. Replace Intelligent Key unit.	SEC-93
Door lock/unlock does not operate by request switch (back door).	1. Back door request switch check.	DLK-61
	2. Rear bumper antenna check.	DLK-78
	3. Replace Intelligent Key unit.	SEC-93
Rear and back door lock actuators do not operate.	1. Passenger select unlock relay check.	DLK-71
	2. Check Intermittent Incident.	GI-51
Selective unlock function does not operate by front door request switch LH (other door lock functions operate properly).	1. Check “SELECT UNLOCK FUNCTION” setting in “WORK SUPPORT”.	DLK-30
	2. Replace Intelligent Key unit.	SEC-93

Symptom	Diagnosis/service procedure		Reference page
Auto lock function does not operate properly.	1.	Check “AUTO RELOCK TIMER” setting in “WORK SUPPORT”.	DLK-30
	2.	Key switch check (BCM).	DLK-96
	3.	Ignition knob switch check.	DLK-97
	4.	Door switch check.	DLK-48
	5.	Replace Intelligent Key unit.	SEC-93
Key reminder function does not operate properly.	1.	Check “ANTI KEY LOCK IN FUNCTION” setting in “WORK SUPPORT”.	DLK-30
	2.	Door switch check.	DLK-48
	3a.	Inside key antenna 1 (instrument panel) check.	DLK-40
	3b.	Inside key antenna 2 (luggage compartment) check.	DLK-42
	3c.	Inside key antenna 3 (center console) check.	DLK-44
	4.	Front door lock actuator LH (door unlock sensor) check.	DLK-57
	5.	Intelligent Key battery and function inspection.	DLK-87
	6.	Replace Intelligent Key unit.	SEC-93

INTELLIGENT KEY

INTELLIGENT KEY : Symptom Table

INFOID:0000000001563608

REMOTE KEYLESS ENTRY FUNCTION MALFUNCTION

NOTE:

- Before performing the diagnosis in the following table, check “Trouble Diagnosis Procedure”. Refer to DLK-8, "Work Flow".
- Make sure that vehicle is under the condition shown in “Conditions of vehicle” before starting diagnosis, and check each symptom.
- If the following “symptoms” are detected, check systems shown in the “Diagnosis/service procedure” column in this order.

Conditions of Vehicle (Operating Conditions)

- Ignition switch is not depressed.
- All doors are closed.

Symptom	Diagnosis/service procedure		Reference page
All of the remote keyless entry functions do not operate.	1.	Intelligent Key battery and function inspection.	DLK-87
	2.	Remote Keyless Entry function check.	DLK-84
	3.	Replace Intelligent Key unit.	SEC-93
Selective unlock function does not operate by Intelligent Key remote control button.	1.	Check “SELECT UNLOCK FUNCTION” setting in “WORK SUPPORT”.	DLK-30
	2.	Intelligent Key battery inspection.	DLK-87
	3.	Replace Intelligent Key unit.	SEC-93
Auto lock function does not operate properly.	1.	Check “AUTO RELOCK TIMER” setting in “WORK SUPPORT”.	DLK-30
	2.	Key switch check (BCM).	DLK-96
	3.	Ignition knob switch check.	DLK-97
	4.	Door switch check.	DLK-48
	5.	Replace Intelligent Key unit.	SEC-93

Symptom	Diagnosis/service procedure		Reference page
Key reminder function does not operate properly.	1.	Check “ANTI KEY LOCK IN FUNCTION” setting in “WORK SUPPORT”.	DLK-30
	2.	Door switch check.	DLK-48
	3a.	Inside key antenna 1 (instrument panel) check.	DLK-40
	3b.	Inside key antenna 2 (luggage compartment) check.	DLK-42
	3c.	Inside key antenna 3 (center console) check.	DLK-44
	4.	Front door lock actuator LH (door unlock sensor) check.	DLK-57
	5.	Intelligent Key battery inspection.	DLK-87
	6.	Replace Intelligent Key unit.	SEC-93
Panic alarm function does not operate properly.	1.	Check “PANIC ALARM DELAY” setting in “WORK SUPPORT”.	DLK-30
	2.	Theft warning operation check.	SEC-17
	3.	Intelligent Key battery inspection.	DLK-87
	4.	Key switch check (BCM).	DLK-96
	5.	Ignition knob switch check.	DLK-97
	6.	Replace Intelligent Key unit.	SEC-93
Back door open function does not operate properly.	1.	Back door diagnosis.	DLK-165
Power window down function does not operate.	1.	Check “PW DOWN SET” setting in “WORK SUPPORT”.	DLK-30
	2.	Intelligent Key battery inspection.	DLK-87

KEY WARNING LAMP (GREEN) ILLUMINATES

NOTE:
- Before performing the diagnosis in the following table, check “Trouble Diagnosis Procedure”. Refer to DLK-8, "Work Flow".
- Make sure that vehicle is under the condition shown in “Conditions of vehicle” before starting diagnosis, and check each symptom.
- If the following “symptoms” are detected, check systems shown in the “Diagnoses/service procedure” column in this order.

Conditions of Vehicle (Operating Conditions)
- Intelligent Key is registered.
- Key is not inserted in ignition switch.
- One or more registered Intelligent Keys are in the vehicle.

Symptom	Diagnosis/service procedure	Reference page
Ignition switch does not turn on with Intelligent Key. [KEY warning lamp (green) illuminates].	1. Steering lock solenoid check.	DLK-80
	2. Replace Intelligent Key unit.	SEC-93

KEY WARNING LAMP (RED) ILLUMINATES

NOTE:
- Before performing the diagnosis in the following table, check “Trouble Diagnosis Procedure”. Refer to DLK-8, "Work Flow".
- Make sure that vehicle is under the condition shown in “Conditions of vehicle” before starting diagnosis, and check each symptom.
- If the following “symptoms” are detected, check systems shown in the “Diagnoses/service procedure” column in this order.

Conditions of Vehicle (Operating Conditions)
- Intelligent Key is registered.
- Key is not inserted in ignition switch.
- One or more registered Intelligent Keys are in the vehicle.

Symptom	Diagnosis/service procedure	Reference page
Ignition switch does not turn on with Intelligent Key. [KEY warning lamp (red) illuminates].	1a. Inside key antenna 1 check.	DLK-40
	1b. Inside key antenna 2 check.	DLK-42
	1c. Inside key antenna 3 check.	DLK-44
	2. Replace Intelligent Key unit.	SEC-93

KEY WARNING LAMP DOES NOT ILLUMINATE

NOTE:

- Before performing the diagnosis in the following table, check “Trouble Diagnosis Procedure”. Refer to DLK-8, "Work Flow".
- Make sure that vehicle is under the condition shown in “Conditions of vehicle” before starting diagnosis, and check each symptom.
- If the following “symptoms” are detected, check systems shown in the “Diagnoses/service procedure” column in this order.
- Check if ignition switch turns using mechanical key. If it turns, check if “ENGINE START BY I-KEY” in “WORK SUPPORT” mode is ON.

Conditions of Vehicle (Operating Conditions)

- Intelligent Key is registered.
- Key is not inserted in ignition switch.
- One or more registered Intelligent Keys are in the vehicle.

Symptom	Diagnosis/service procedure	Reference page
Ignition switch does not turn on with Intelligent Key. [KEY warning lamp does not illuminate].	1. Intelligent Key unit power supply and ground circuit check.	DLK-46
	2. Ignition knob switch check.	DLK-97
	3. Key switch check.	DLK-94
	4. Replace Intelligent Key unit.	SEC-93

BACK DOOR OPENER FUNCTION

BACK DOOR OPENER SWITCH

BACK DOOR OPENER SWITCH : Symptom Table

INFOID:0000000001563609

BACK DOOR OPEN FUNCTION MALFUNCTION

NOTE:

- Before performing the diagnosis in the following table, check “WORK FLOW”. Refer to DLK-8, "Work Flow".
- Check that vehicle is under the condition shown in “Conditions of vehicle” before starting diagnosis, and check each symptom.
- If the following symptoms” are detected, check systems shown in the “Diagnosis/service procedure” column in this order.

Conditions of Vehicle (Operating Conditions)

- Vehicle is in park.

Symptom	Suspect systems	Refer to
Back door cinching latch unit inoperative	Power supply and ground circuit check	DLK-46
	Half switch inspection	DLK-104
	Close switch inspection	DLK-106
	Neutral switch inspection	DLK-108
	Back door release switch inspection	DLK-110
	Back door cinching latch unit motor inspection	DLK-113
	Check intermittent incident	GI-51

WARNING FUNCTION SYMPTOMS

Symptom Table

INFOID:0000000001563612

WARNING FUNCTION MALFUNCTION

NOTE:

- Before performing the diagnosis in the following table, check “WORK FLOW”. Refer to DLK-8, "Work Flow".
- Check that vehicle is under the condition shown in “Conditions of vehicle” before starting diagnosis, and check each symptom.
- If the following “symptoms are detected, check systems shown in the “Diagnosis/service procedure” column in this order.

Conditions of Vehicle (Operating Conditions)

Warning chime functions operating condition is extremely complicated, during operating confirmations, reconfirm the list above twice in order to ensure proper operation.

Symptom		Diagnosis/service procedure	Reference page
OFF position warning does not operate.	For internal	1. Check ignition knob switch.	DLK-97
		2. Check door switch.	DLK-48
		3. Check warning chime function.	DLK-92
		4. Check Intermittent Incident.	GI-51
	For external	1. Check ignition knob switch.	DLK-97
		2. Check door switch.	DLK-48
		3. Check Intelligent Key warning buzzer.	DLK-73
		4. Check Intermittent Incident.	GI-51
P position warning does not operate.		1. Check Park position switch.	DLK-82
		2. Check door switch.	DLK-48
		3. Check Intelligent Key warning buzzer.	DLK-73
		4. Check warning chime function.	DLK-92
		5. Check combination meter display function.	DLK-91
		6. Check Intermittent Incident.	GI-51
ACC warning does not operate		1. Check ignition knob switch.	DLK-97
		2. Check warning chime function.	DLK-92
		3. Check combination meter display function.	DLK-91
		4. Check Intermittent Incident.	GI-51

Symptom		Diagnosis/service procedure		Reference page
Take away warning does not operate.	Door open to close	1. Check door switch.		DLK-48
		2. Check inside key antennas (1, 2, 3).	Instrument panel	DLK-40
			Luggage compartment	DLK-42
			Center console	DLK-44
		3. Check Intelligent Key warning buzzer.		DLK-73
		4. Check warning chime function.		DLK-92
		5. Check ignition knob switch.		DLK-97
		6. Check combination meter display function.		DLK-91
		7. Check Intermittent Incident.		GI-51
	Push-button ignition switch operation	1. Check ignition knob switch.		DLK-97
		2. Check inside key antennas (1, 2, 3).	Instrument panel	DLK-40
			Luggage compartment	DLK-42
			Center console	DLK-44
		3. Check warning chime function.		DLK-92
		4. Check combination meter display function.		DLK-91
		5. Check Intermittent Incident.		GI-51
	Door is open	1. Check ignition knob switch.		DLK-97
		2. Check inside key antennas (1, 2, 3).	Instrument panel	DLK-40
			Luggage compartment	DLK-42
			Center console	DLK-44
		3. Check combination meter display function.		DLK-91
		4. Check Intermittent Incident.		GI-51
	Take away through window	1. Check “TAKE OUT FROM WIN WARN” setting in “WORK SUPPORT”.		DLK-33
		2. Check inside key antennas (1, 2, 3).	Instrument panel	DLK-40
			Luggage compartment	DLK-42
			Center console	DLK-44
		3. Check warning chime function.		DLK-92
		4. Check ignition knob switch.		DLK-97
		5. Check combination meter display function.		DLK-91
		6. Check Intermittent Incident.		GI-51
Key warning chime does not operate.		1. Check door switch.		DLK-48
		2. Check warning chime function.		DLK-92
		3. Check ignition knob switch.		DLK-97
		4. Check combination meter display function.		DLK-91
		5. Check Intermittent Incident.		GI-51
Door lock operation warning chime does not operate.		1. Check door switch.		DLK-48
		2. Check ignition knob switch.		DLK-97
		3. Check Intelligent Key warning buzzer.		DLK-73
		4. Check inside key antennas (1, 2, 3).	Instrument panel	DLK-40
			Luggage compartment	DLK-42
			Center console	DLK-44
		5. Check Intermittent Incident.		GI-51

KEY REMINDER FUNCTION SYMPTOMS

Symptom Table

INFOID:0000000001563613

KEY REMINDER FUNCTION MALFUNCTION

NOTE:

- Before performing the diagnosis in the following table, check “Work flow”. Refer to DLK-8, "Work Flow".
- If the following symptoms” are detected, check systems shown in the “Diagnosis/service procedure” column in this order.

Conditions of Vehicle (Operating Conditions)

- “LOCK/UNLOCK BY I-KEY” is ON when setting on CONSULT-III.
- “ANSWER BACK FUNCTION” is ON when setting on CONSULT-III.
- Ignition switch is in OFF position.
- All doors are closed.
- Ignition switch is not depressed.

Symptom	Diagnosis/service procedure		Reference page
Key reminder function does not operate.	1. Check “ANTI KEY LOCK IN FUNCTI”setting in “WORK SUPPORT”.		DLK-33
	2. Check door switch.		DLK-48
	3. Check inside key antennas (1, 2, 3)	Instrument panel	DLK-40
		Luggage compartment	DLK-42
		Center console	DLK-44
	4. Check unlock sensor.		DLK-57
	5. Check Intelligent Key battery inspection.		DLK-87
	6. Check Intermittent Incident.		GI-51

HAZARD FUNCTION

Symptom Table

INFOID:0000000001563614

HAZARD AND BUZZER REMINDER FUNCTION MALFUNCTION

NOTE:
- Before performing the diagnosis in the following table, check “Work flow”. Refer to DLK-8, "Work Flow".
- If the following symptoms” are detected, check systems shown in the “Diagnosis/service procedure” column in this order.

Conditions of Vehicle (Operating Conditions)
- “LOCK/UNLOCK BY I-KEY” is ON when setting on CONSULT-III.
- “ANSWER BACK FUNCTION” is ON when setting on CONSULT-III.
- Ignition switch is in OFF position.
- All doors are closed.
- Ignition switch is not depressed.

Symptom	Diagnosis/service procedure	Reference page
Hazard reminder does not operate by request switch. (Buzzer reminder operate.)	1. Check “HAZARD ANSWER BACK” setting in “WORK SUPPORT”.	DLK-33
	2. Check hazard function.	DLK-93
	3. Check Intermittent incident.	GI-51
Hazard reminder does not operate by Intelligent Key. (Buzzer reminder operate.)	1. Check “HAZARD ANSWER BACK” setting in “WORK SUPPORT”.	DLK-33
	2. Check hazard function.	DLK-93
	3. Check Intelligent Key battery inspection.	DLK-87
Buzzer reminder does not operate by request switch. (Hazard reminder operate.)	1. Check “ANS BACK I-KEY LOCK” or “ANS BACK I-KEY UNLOCK” setting in “WORK SUPPORT”.	DLK-33
	2. Check Intelligent Key warning buzzer.	DLK-73
	3. Check Intermittent incident.	GI-51

HORN FUNCTION

Symptom Table

INFOID:0000000001563615

HAZARD AND HORN REMINDER FUNCTION MALFUNCTION

NOTE:
- Before performing the diagnosis in the following table, check “Work flow”. Refer to DLK-8, "Work Flow".
- If the following symptoms” are detected, check systems shown in the “Diagnosis/service procedure” column in this order.

Conditions of Vehicle (Operating Conditions)
- “ANSWER BACK FUNCTION” is ON when setting on CONSULT-III.
- Ignition switch is in OFF position.
- All doors are closed.

Symptom	Diagnosis/service procedure	Reference page
Hazard reminder does not operate by request switch. (Horn reminder operate.)	1. Check “HAZARD ANSWER BACK” setting in “WORK SUPPORT”.	DLK-33
	2. Check hazard function.	DLK-93
	3. Check Intermittent Incident.	GI-51
Hazard reminder does not operate by Intelligent Key. (Horn reminder operate.)	1. Check “HAZARD ANSWER BACK” setting in “WORK SUPPORT”.	DLK-33
	2. Check hazard function.	DLK-93
	3. Check Intelligent Key battery inspection.	DLK-87
Horn reminder does not operate by request switch. (Hazard reminder operate.)	1. Check “ANSWER BACK WITH I-KEY LOCK” or “ANSWER BACK WITH I-KEY UNLOCK” setting in “WORK SUPPORT”.	DLK-33
	2. Check Intelligent Key warning buzzer.	DLK-73
	3. Check Intermittent Incident.	GI-51
Horn reminder does not operate by Intelligent Key. (Hazard reminder operate.)	1. Check “HORN WITH KEYLESS LOCK” setting in “WORK SUPPORT”.	DLK-33
	2. Check horn function.	DLK-89
	3. Check Intermittent Incident.	GI-51

HOMELINK UNIVERSAL TRANSCEIVER

Symptom Table

INFOID:0000000001563616

HOMELINK UNIVERSAL TRANSCEIVER MALFUNCTION

Symptom	Diagnosis/service procedure	Reference page
Homelink universal transceiver does not operate properly.	1. Check homelink universal transceiver function.	DLK-114
	2. Check Intermittent Incident.	GI-51

SQUEAK AND RATTLE TROUBLE DIAGNOSES

Work Flow

INFOID:0000000001563617

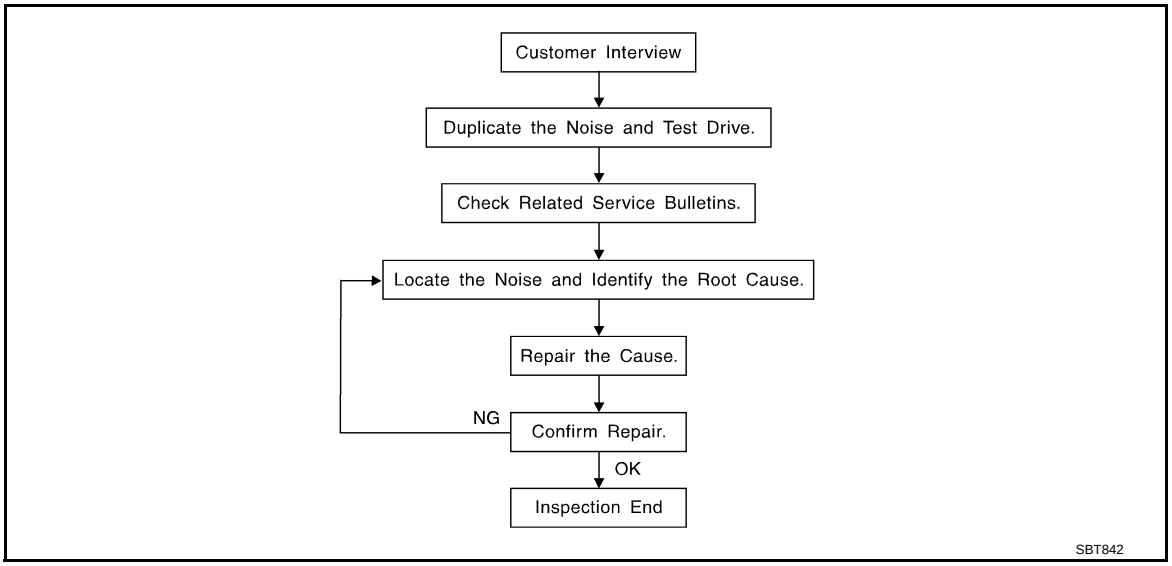

CUSTOMER INTERVIEW

Interview the customer if possible, to determine the conditions that exist when the noise occurs.Use the Diagnostic Worksheet during the interview to document the facts and conditions when the noise occurs and any customer's comments; refer to DLK-176, "Diagnostic Worksheet". This information is necessary to duplicate the conditions that exist when the noise occurs.

- The customer may not be able to provide a detailed description or the location of the noise. Attempt to obtain all the facts and conditions that exist when the noise occurs (or does not occur).
- If there is more than one noise in the vehicle, be sure to diagnose and repair the noise that the customer is concerned about. This can be accomplished by test driving the vehicle with the customer.
- After identifying the type of noise, isolate the noise in terms of its characteristics. The noise characteristics are provided so the customer, service adviser and technician are all speaking the same language when defining the noise.
- Squeak —(Like tennis shoes on a clean floor)
  Squeak characteristics include the light contact/fast movement/brought on by road conditions/hard surfaces = higher pitch noise/softer surfaces = lower pitch noises/edge to surface = chirping
- Creak—(Like walking on an old wooden floor)
  Creak characteristics include firm contact/slow movement/twisting with a rotational movement/pitch dependent on materials/often brought on by activity.
- Rattle—(Like shaking a baby rattle)
  Rattle characteristics include the fast repeated contact/vibration or similar movement/loose parts/missing clip or fastener/incorrect clearance.
- Knock —(Like a knock on a door)
  Knock characteristics include hollow sounding/sometimes repeating/often brought on by driver action.
- Tick—(Like a clock second hand)
  Tick characteristics include gentle contacting of light materials/loose components/can be caused by driver action or road conditions.
- Thump—(Heavy, muffled knock noise)
  Thump characteristics include softer knock/dead sound often brought on by activity.
- Buzz—(Like a bumble bee)
  Buzz characteristics include high frequency rattle/firm contact.
- Often the degree of acceptable noise level will vary depending upon the person. A noise that you may judge as acceptable may be very irritating to the customer.
- Weather conditions, especially humidity and temperature, may have a great effect on noise level.

DUPLICATE THE NOISE AND TEST DRIVE

If possible, drive the vehicle with the customer until the noise is duplicated. Note any additional information on the Diagnostic Worksheet regarding the conditions or location of the noise. This information can be used to duplicate the same conditions when you confirm the repair.

If the noise can be duplicated easily during the test drive, to help identify the source of the noise, try to duplicate the noise with the vehicle stopped by doing one or all of the following:
1) Close a door.
2) Tap or push/pull around the area where the noise appears to be coming from.
3) Rev the engine.
4) Use a floor jack to recreate vehicle “twist”.
5) At idle, apply engine load (electrical load, half-clutch on M/T model, drive position on A/T model).
6) Raise the vehicle on a hoist and hit a tire with a rubber hammer.

- Drive the vehicle and attempt to duplicate the conditions the customer states exist when the noise occurs.
- If it is difficult to duplicate the noise, drive the vehicle slowly on an undulating or rough road to stress the vehicle body.

CHECK RELATED SERVICE BULLETINS

After verifying the customer concern or symptom, check ASIST for Technical Service Bulletins (TSBs) related to that concern or symptom.
If a TSB relates to the symptom, follow the procedure to repair the noise.

LOCATE THE NOISE AND IDENTIFY THE ROOT CAUSE

1. Narrow down the noise to a general area. To help pinpoint the source of the noise, use a listening tool (Chassis Ear: J-39570, Engine Ear and mechanics stethoscope).
2. Narrow down the noise to a more specific area and identify the cause of the noise by:

- removing the components in the area that you suspect the noise is coming from.
  Do not use too much force when removing clips and fasteners, otherwise clips and fastener can be broken or lost during the repair, resulting in the creation of new noise.
- tapping or pushing/pulling the component that you suspect is causing the noise.
  Do not tap or push/pull the component with excessive force, otherwise the noise will be eliminated only temporarily.
- feeling for a vibration with your hand by touching the component(s) that you suspect is (are) causing the noise.
- placing a piece of paper between components that you suspect are causing the noise.
- looking for loose components and contact marks.
  Refer to DLK-174, "Inspection Procedure".

REPAIR THE CAUSE

- If the cause is a loose component, tighten the component securely.
- If the cause is insufficient clearance between components:
- separate components by repositioning or loosening and retightening the component, if possible.
- insulate components with a suitable insulator such as urethane pads, foam blocks, felt cloth tape or urethane tape. A Nissan Squeak and Rattle Kit (J-43980) is available through your authorized Nissan Parts Department.

CAUTION:
Do not use excessive force as many components are constructed of plastic and may be damaged.
NOTE:
Always check with the Parts Department for the latest parts information.
The following materials are contained in the Nissan Squeak and Rattle Kit (J-43980). Each item can be ordered separately as needed.
URETHANE PADS [1.5 mm (0.059 in) thick]
Insulates connectors, harness, etc.
76268-9E005: 100 × 135 mm (3.94 × 5.31 in)/76884-71L01: 60 × 85 mm (2.36 × 3.35 in)/76884-71L02: 15 × 25 mm (0.59 × 0.98 in)
INSULATOR (Foam blocks)
Insulates components from contact. Can be used to fill space behind a panel.
73982-9E000: 45 mm (1.77 in) thick, 50 × 50 mm (1.97 × 1.97 in)/73982-50Y00: 10 mm (0.39 in) thick, 50 × 50 mm (1.97 × 1.97 in)
INSULATOR (Light foam block)
80845-71L00: 30 mm (1.18 in) thick, 30 × 50 mm (1.18 × 1.97 in)
FELT CLOTHTAPE
Used to insulate where movement does not occur. Ideal for instrument panel applications.
68370-4B000: 15 × 25 mm (0.59 × 0.98 in) pad/68239-13E00: 5 mm (0.20 in) wide tape roll
The following materials, not found in the kit, can also be used to repair squeaks and rattles.
UHMW (TEFLON) TAPE

Insulates where slight movement is present. Ideal for instrument panel applications.
SILICONE GREASE
Used in place of UHMW tape that will be visible or not fit. Will only last a few months.
SILICONE SPRAY
Use when grease cannot be applied.
DUCT TAPE
Use to eliminate movement.

CONFIRM THE REPAIR

Confirm that the cause of a noise is repaired by test driving the vehicle. Operate the vehicle under the same conditions as when the noise originally occurred. Refer to the notes on the Diagnostic Worksheet.

Inspection Procedure

INFOID:0000000001563618

Refer to Table of Contents for specific component removal and installation information.

INSTRUMENT PANEL

Most incidents are caused by contact and movement between:

1. The cluster lid A and instrument panel
2. Acrylic lens and combination meter housing
3. Instrument panel to front pillar garnish
4. Instrument panel to windshield
5. Instrument panel mounting pins
6. Wiring harnesses behind the combination meter
7. A/C defroster duct and duct joint

These incidents can usually be located by tapping or moving the components to duplicate the noise or by pressing on the components while driving to stop the noise. Most of these incidents can be repaired by applying felt cloth tape or silicon spray (in hard to reach areas). Urethane pads can be used to insulate wiring harness.

CAUTION:
Do not use silicone spray to isolate a squeak or rattle. If you saturate the area with silicone, you will not be able to recheck the repair.

CENTER CONSOLE

Components to pay attention to include:

1. Shifter assembly cover to finisher
2. A/C control unit and cluster lid C
3. Wiring harnesses behind audio and A/C control unit

The instrument panel repair and isolation procedures also apply to the center console.

DOORS

Pay attention to the:

1. Finisher and inner panel making a slapping noise
2. Inside handle escutcheon to door finisher
3. Wiring harnesses tapping
4. Door striker out of alignment causing a popping noise on starts and stops

Tapping or moving the components or pressing on them while driving to duplicate the conditions can isolate many of these incidents. You can usually insulate the areas with felt cloth tape or insulator foam blocks from the Nissan Squeak and Rattle Kit (J-43980) to repair the noise.

TRUNK

Trunk noises are often caused by a loose jack or loose items put into the trunk by the owner.
In addition look for:

1. Trunk lid dumpers out of adjustment
2. Trunk lid striker out of adjustment
3. The trunk lid torsion bars knocking together
4. A loose license plate or bracket

Most of these incidents can be repaired by adjusting, securing or insulating the item(s) or component(s) causing the noise.

SUNROOF/HEADLINING

Noises in the sunroof/headlining area can often be traced to one of the following:

1. Sunroof lid, rail, linkage or seals making a rattle or light knocking noise
2. Sunvisor shaft shaking in the holder
3. Front or rear windshield touching headlining and squeaking

Again, pressing on the components to stop the noise while duplicating the conditions can isolate most of these incidents. Repairs usually consist of insulating with felt cloth tape.

SEATS

When isolating seat noise it's important to note the position the seat is in and the load placed on the seat when the noise is present. These conditions should be duplicated when verifying and isolating the cause of the noise.
Cause of seat noise include:

1. Headrest rods and holder
2. A squeak between the seat pad cushion and frame
3. The rear seatback lock and bracket

These noises can be isolated by moving or pressing on the suspected components while duplicating the conditions under which the noise occurs. Most of these incidents can be repaired by repositioning the component or applying urethane tape to the contact area.

UNDERHOOD

Some interior noise may be caused by components under the hood or on the engine wall. The noise is then transmitted into the passenger compartment.
Causes of transmitted underhood noise include:

1. Any component mounted to the engine wall
2. Components that pass through the engine wall
3. Engine wall mounts and connectors
4. Loose radiator mounting pins
5. Hood bumpers out of adjustment
6. Hood striker out of adjustment

These noises can be difficult to isolate since they cannot be reached from the interior of the vehicle. The best method is to secure, move or insulate one component at a time and test drive the vehicle. Also, engine RPM or load can be changed to isolate the noise. Repairs can usually be made by moving, adjusting, securing, or insulating the component causing the noise.

Diagnostic Worksheet

INFOID:0000000001563619

Dear Customer:
We are concerned about your satisfaction with your vehicle. Repairing a squeak or rattle sometimes can be very difficult. To help us fix your vehicle right the first time, please take a moment to note the area of the vehicle where the squeak or rattle occurs and under what conditions. You may be asked to take a test drive with a service advisor or technician to ensure we confirm the noise you are hearing.

SQUEAK & RATTLE DIAGNOSTIC WORKSHEET

I. WHERE DOES THE NOISE COME FROM? (circle the area of the vehicle)
The illustrations are for reference only, and may not reflect the actual configuration of your vehicle.

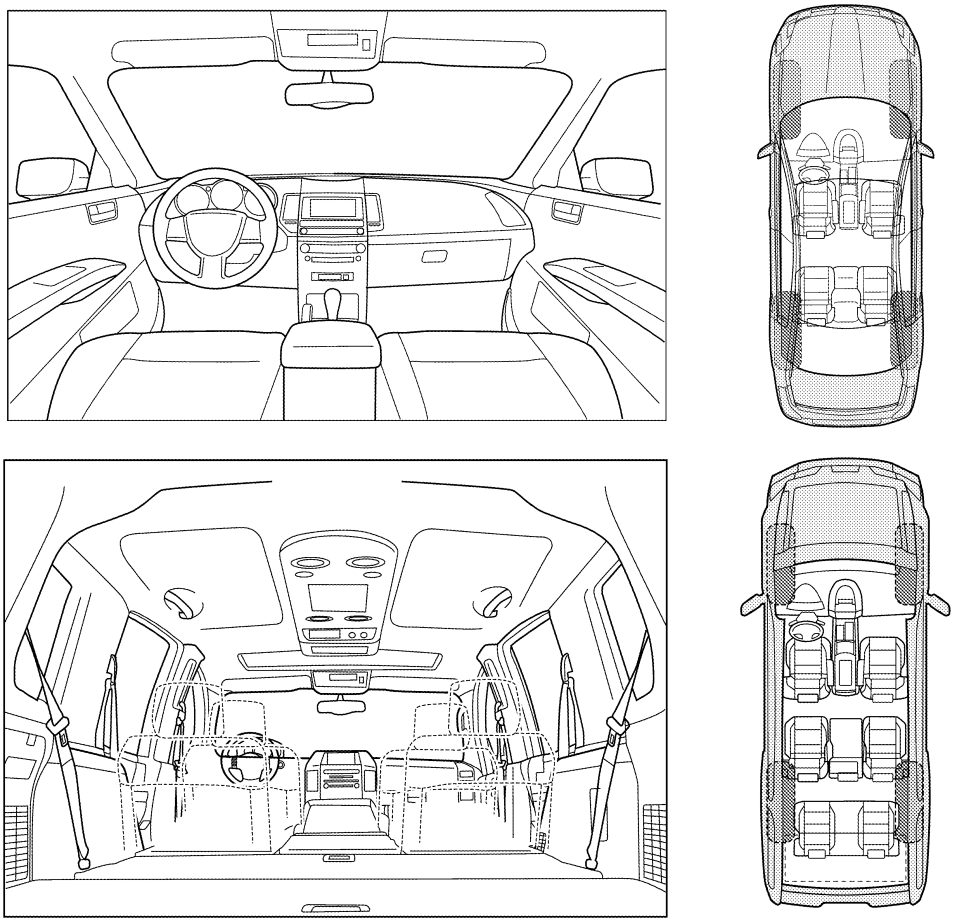

Continue to page 2 of the worksheet and briefly describe the location of the noise or rattle. In addition, please indicate the conditions which are present when the noise occurs.

SQUEAK & RATTLE DIAGNOSTIC WORKSHEET - page 2

Briefly describe the location where the noise occurs:

_____

_____

II. WHEN DOES IT OCCUR? (please check the boxes that apply)

- ☐ Anytime
- ☐ 1st time in the morning
- ☐ Only when it is cold outside
- ☐ Only when it is hot outside
- ☐ After sitting out in the rain
- ☐ When it is raining or wet
- ☐ Dry or dusty conditions
- ☐ Other:

III. WHEN DRIVING:

- ☐ Through driveways
- ☐ Over rough roads
- ☐ Over speed bumps
- ☐ Only about ____ mph
- ☐ On acceleration
- ☐ Coming to a stop
- ☐ On turns: left, right or either (circle)
- ☐ With passengers or cargo
- ☐ Other: _____
- ☐ After driving _____ miles or _____ minutes

IV. WHAT TYPE OF NOISE

- ☐ Squeak (like tennis shoes on a clean floor)
- ☐ Creak (like walking on an old wooden floor)
- ☐ Rattle (like shaking a baby rattle)
- ☐ Knock (like a knock at the door)
- ☐ Tick (like a clock second hand)
- ☐ Thump (heavy muffled knock noise)
- ☐ Buzz (like a bumble bee)

TO BE COMPLETED BY DEALERSHIP PERSONNEL

Test Drive Notes:

_____

_____

_____

	YES	NO	Initials of person performing
Vehicle test driven with customer	☐	☐	_____
- Noise verified on test drive	☐	☐	_____
- Noise source located and repaired	☐	☐	_____
- Follow up test drive performed to confirm repair	☐	☐	_____

VIN: _____ Customer Name _____

W.O.# _____ Date: _____

This form must be attached to Work Order

LAIA0071E

PRECAUTION

PRECAUTIONS

Precaution for Supplemental Restraint System (SRS) "AIR BAG" and "SEAT BELT PRE-TENSIONER"

INFOID:0000000001563620

The Supplemental Restraint System such as “AIR BAG” and “SEAT BELT PRE-TENSIONER”, used along with a front seat belt, helps to reduce the risk or severity of injury to the driver and front passenger for certain types of collision. This system includes seat belt switch inputs and dual stage front air bag modules. The SRS system uses the seat belt switches to determine the front air bag deployment, and may only deploy one front air bag, depending on the severity of a collision and whether the front occupants are belted or unbelted.
Information necessary to service the system safely is included in the SR and SB section of this Service Manual.

WARNING:

- **To avoid rendering the SRS inoperative, which could increase the risk of personal injury or death in the event of a collision which would result in air bag inflation, all maintenance must be performed by an authorized NISSAN/INFINITI dealer.**
- **Improper maintenance, including incorrect removal and installation of the SRS, can lead to personal injury caused by unintentional activation of the system. For removal of Spiral Cable and Air Bag Module, see the SR section.**
- **Do not use electrical test equipment on any circuit related to the SRS unless instructed to in this Service Manual. SRS wiring harnesses can be identified by yellow and/or orange harnesses or harness connectors.**

Precaution for work

INFOID:0000000001563621

- After removing and installing the opening/closing parts, be sure to carry out fitting adjustments to check their operation.
- Check the lubrication level, damage, and wear of each part. If necessary, grease or replace it.

PREPARATION

PREPARATION

Special Service Tool

INFOID:0000000001563622

The actual shapes of Kent-Moore tools may differ from those of special service tools illustrated here.

Tool number (Kent-Moore No.) Tool name		Description
— (J-39570) Chassis ear	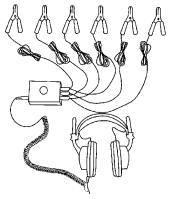 SIIA0993E	Locating the noise
— (J-43980) NISSAN Squeak and Rattle Kit	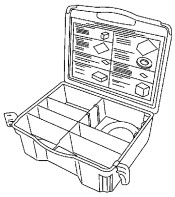 SIIA0994E	Repairing the cause of noise
— (J-43241) Remote Keyless Entry Tester	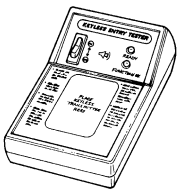 LEL946A	Used to test keyfobs

Commercial Service Tool

INFOID:0000000001563623

(Kent-Moore No.) Tool name	Description
(J-39565) Engine ear 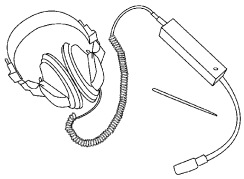 SIIA0995E	Locating the noise

ON-VEHICLE REPAIR

HOOD

Fitting Adjustment

INFOID:0000000001563782

SEC.650

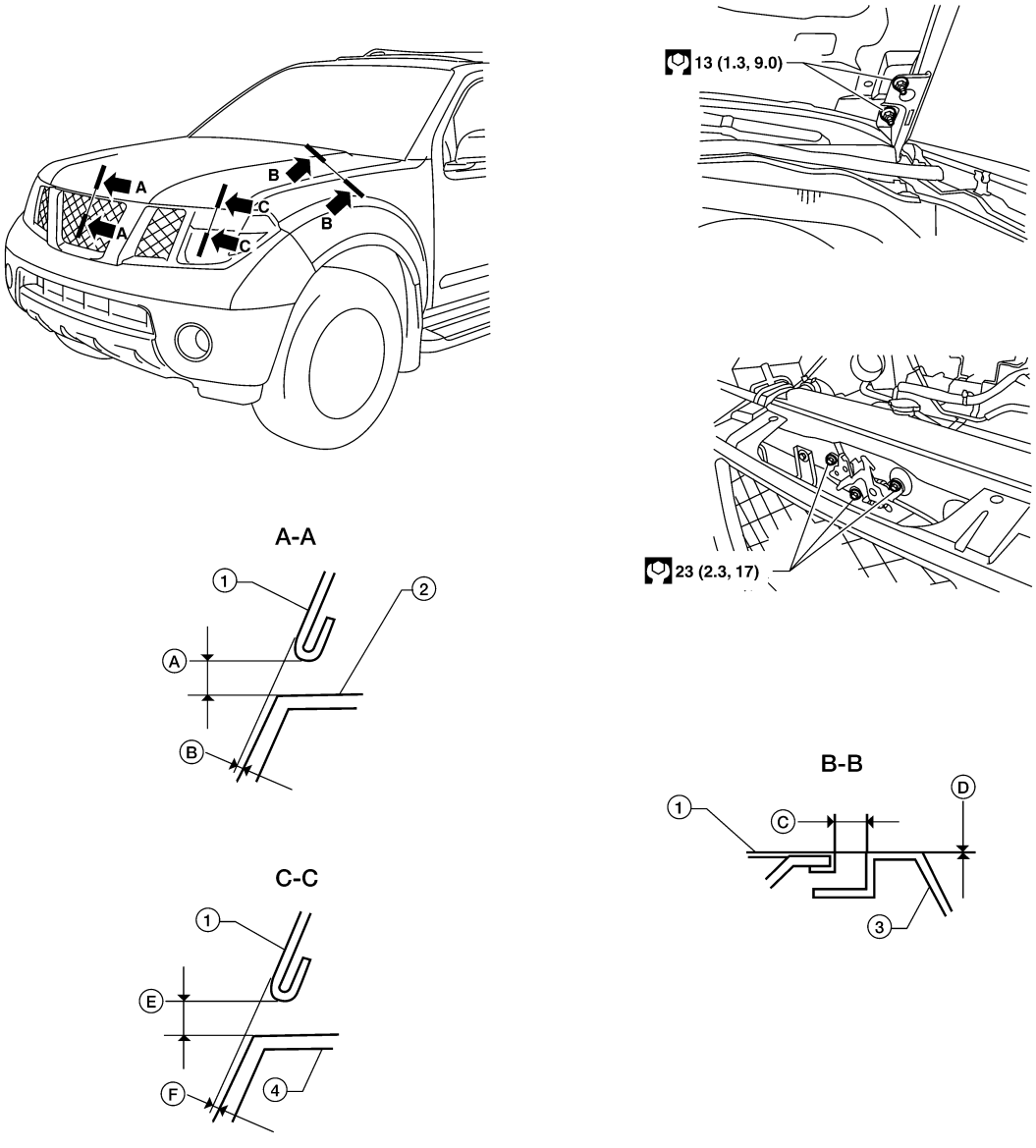

WIIA0774E

1.	Hood	2.	Front grille	3.	Front fender
4.	Headlamp assembly	A.	6.0 mm (0.24 in)	B.	0.7 mm (0.03 in)
C.	4.5 mm (0.18 in)	D.	0.0 mm (0.0 in)	E.	6.0 mm (0.24 in)
F.	0.7 mm (0.03 in)				

CLEARANCE AND SURFACE HEIGHT ADJUSTMENT

1. Remove the front grille. Refer to EXT-16, "Removal and Installation".
2. Loosen the hood lock assembly and adjust the rubber bumpers until the surface height of the hood becomes 1 mm (0.04 in) lower than the fender.
3. Engage the hood striker and temporarily tighten.
4. Check the lock and striker for looseness.

5. Tighten the bolts to specification.
6. Adjust the surface height of the hood according to the fitting standard dimension by rotating right and left rubber bumpers.
7. Install the front grille. Refer to EXT-16, "Removal and Installation".

HOOD LOCK ADJUSTMENT

1. Remove the front grille. Refer to EXT-16, "Removal and Installation".
2. Move the hood lock to the left or right so that striker center is vertically aligned with hood lock center (when viewed from vehicle front).
3. Make sure the secondary latch is properly engaged with the secondary striker with hood's own weight by dropping it from approx. 200 mm (7.87 in) height or by pressing it lightly approx. 3 kg (29 N, 7lb).
   CAUTION:
   Do not drop the hood from 300 mm (11.81 in) height or higher.

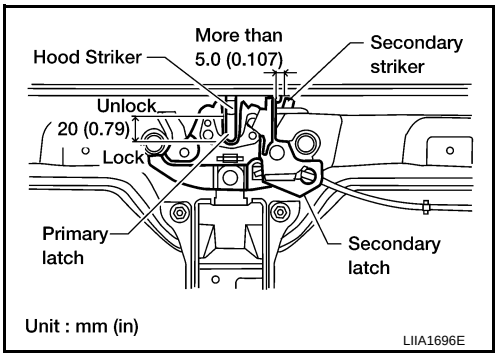

4. After adjusting hood lock, tighten the lock bolts to the specified torque.

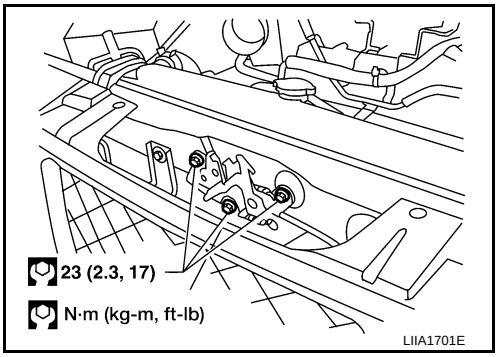

5. Install the front grille. Refer to EXT-16, "Removal and Installation".

Removal and Installation of Hood Assembly

INFOID:0000000001563783

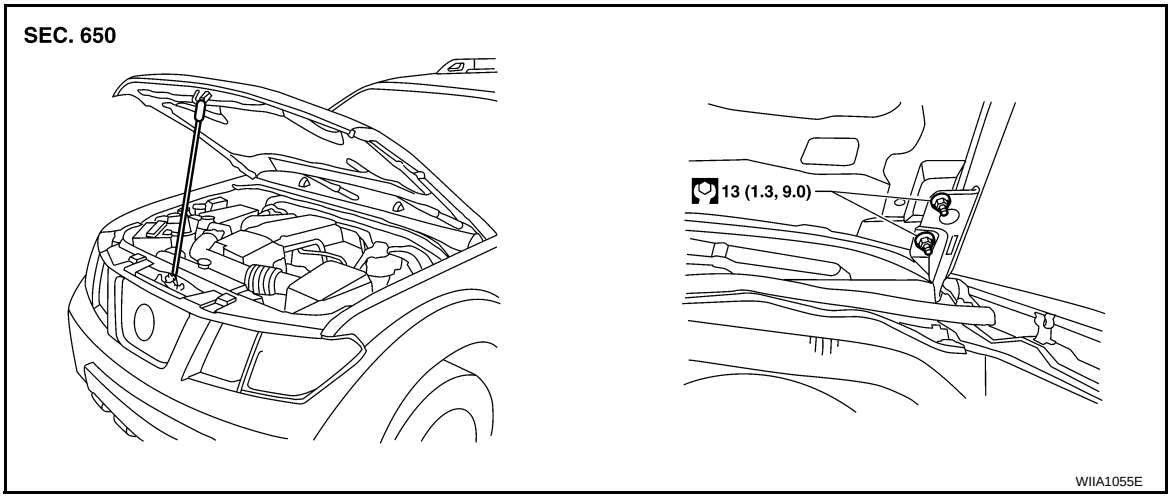

1. Support the hood striker with suitable tool to prevent it from falling.
2. Remove the hinge nuts from the hood to remove the hood assembly.

CAUTION:
Operate with two workers, because of its heavy weight.
Installation is in the reverse order of removal.

Removal and Installation of Hood Lock Control

INFOID:0000000001563784

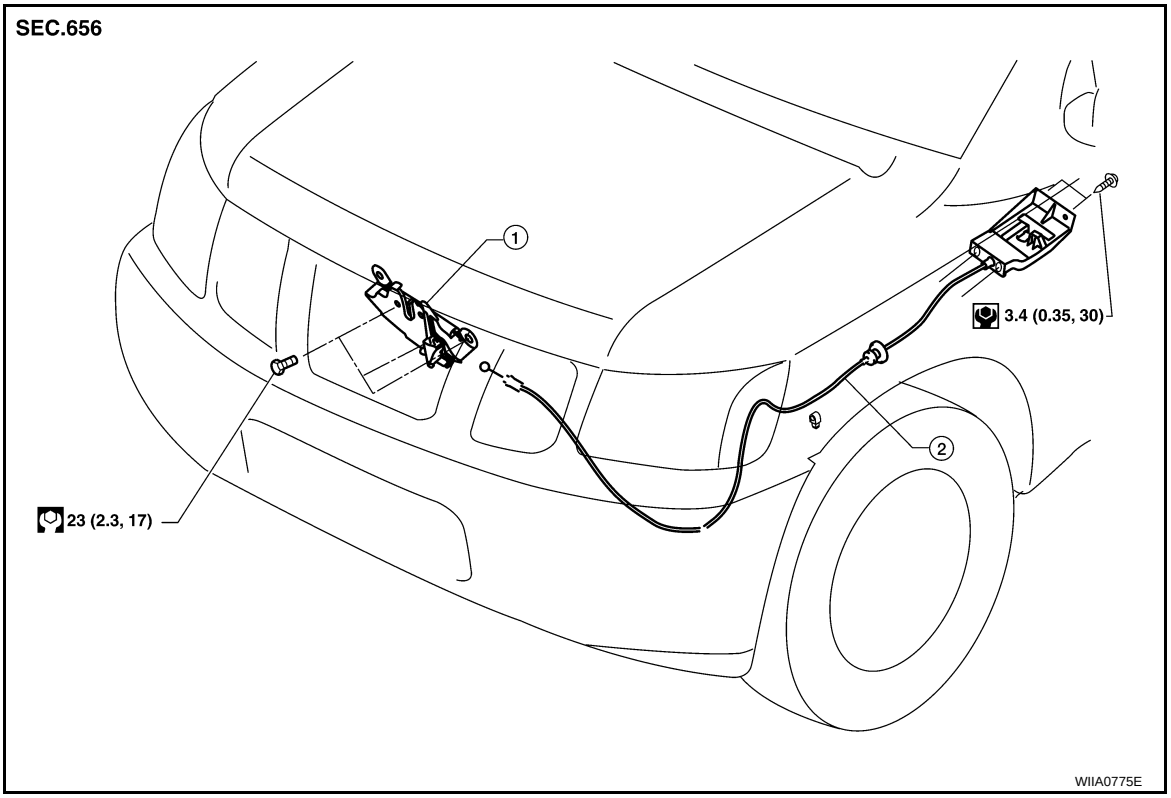

1. Hood lock assembly
2. Hood lock cable

REMOVAL

1. Remove the front grille. Refer to EXT-16, "Removal and Installation".
2. Remove the front fender protector (LH). Refer to EXT-20, "Removal and Installation of Front Fender Protector".
3. Disconnect the hood lock cable from the hood lock, and unclip it from the radiator core support upper and hoodledge.
4. Remove the bolts, and the hood release handle.
5. Separate the grommet from the lower dash panel. Pull the hood lock cable out through the passenger compartment.
   CAUTION:
   While pulling, be careful not to damage the outside of the hood lock cable.

INSTALLATION

1. Pull the hood lock cable through the lower dash panel hole into the engine room.

Be careful not to bend the cable too much, keep the radius 100mm (3.94 in) or more.

2. Make sure the cable is not offset from the grommet, and push the grommet into the lower dash panel hole securely.
3. Apply sealant around the grommet at * mark.

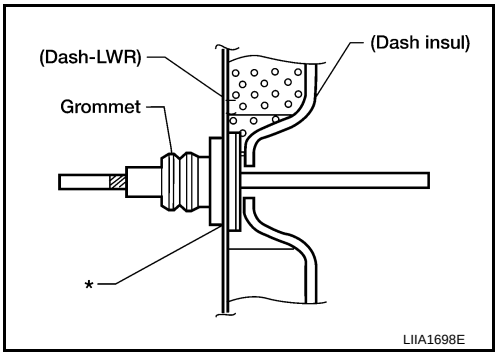

4. Install the cable securely to the lock.
5. Adjust the hood lock. Refer to DLK-183, "Removal and Installation of Hood Lock Control".

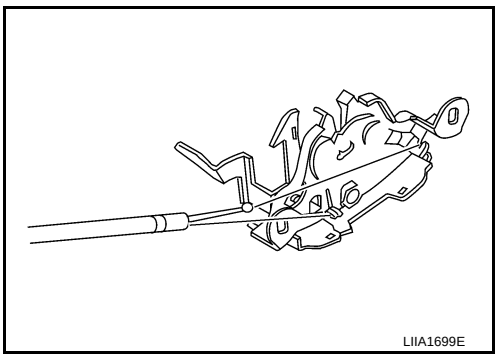

6. Install the front grille. Refer to EXT-16, "Removal and Installation".

Hood Lock Control Inspection

INFOID:0000000001563785

CAUTION:
If the hood lock cable is bent or deformed, replace it.

1. Remove the front grille. Refer to EXT-16, "Removal and Installation".
2. Make sure the secondary latch is properly engaged with the secondary striker with hood's own weight by dropping it from approx. 200 mm (7.87 in) height.
3. While operating the hood opener, carefully make sure the front end of the hood is raised by approx. 20 mm (0.79 in). Also make sure the hood opener returns to the original position.

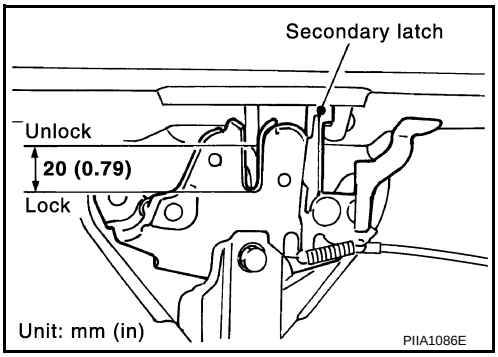

4. Check the hood lock lubrication condition. If necessary, apply “body grease” to the points shown.

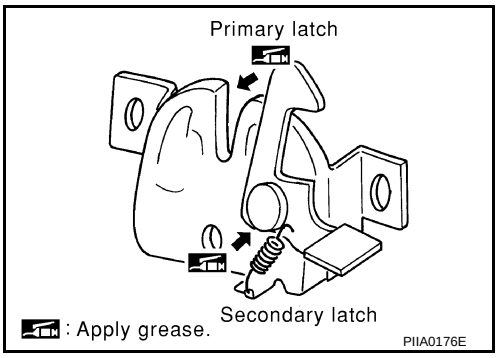

5. Install the front grille. Refer to EXT-16, "Removal and Installation".

DOOR

Fitting Adjustment

INFOID:0000000001563786

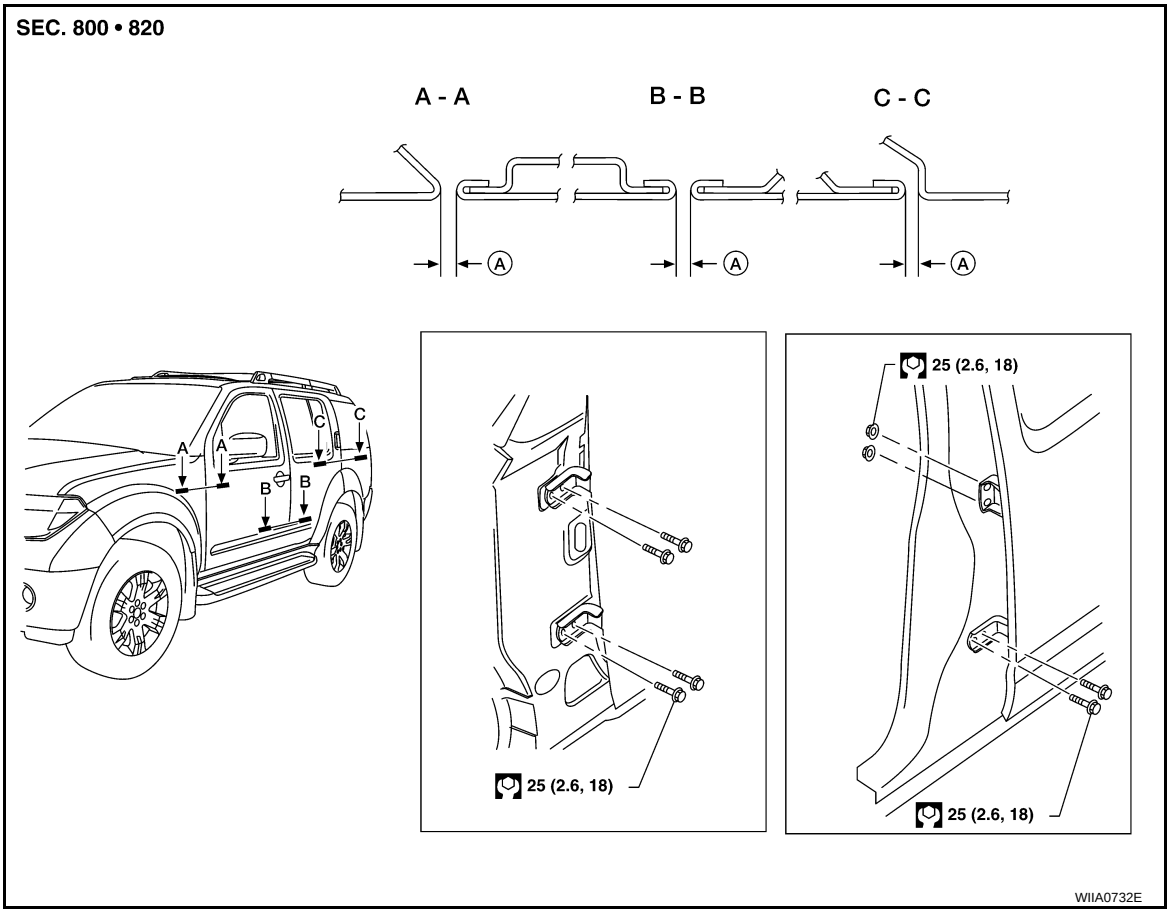

A. 4.5 ± 1.0 mm (0.177 ± 0.039 in)

Front door

Longitudinal clearance and surface height adjustment at front end

1. Remove the fender. Refer to EXT-18, "Removal and Installation".
2. Loosen the hinge bolts. Raise or lower the front door at rear end to adjust.
3. Install the fender. Refer to EXT-18, "Removal and Installation".

Rear door

Longitudinal clearance and surface height adjustment at front end

1. Remove the center pillar upper finisher. Refer to INT-13, "Removal and Installation".
2. Loosen the lower hinge bolts.
3. From inside the vehicle, loosen the upper hinge nuts. Open the door, and raise or lower the rear end of the door to adjust.
4. Install the center pillar lower finisher. Refer to INT-13, "Removal and Installation".

Back door

Longitudinal clearance and surface height adjustment

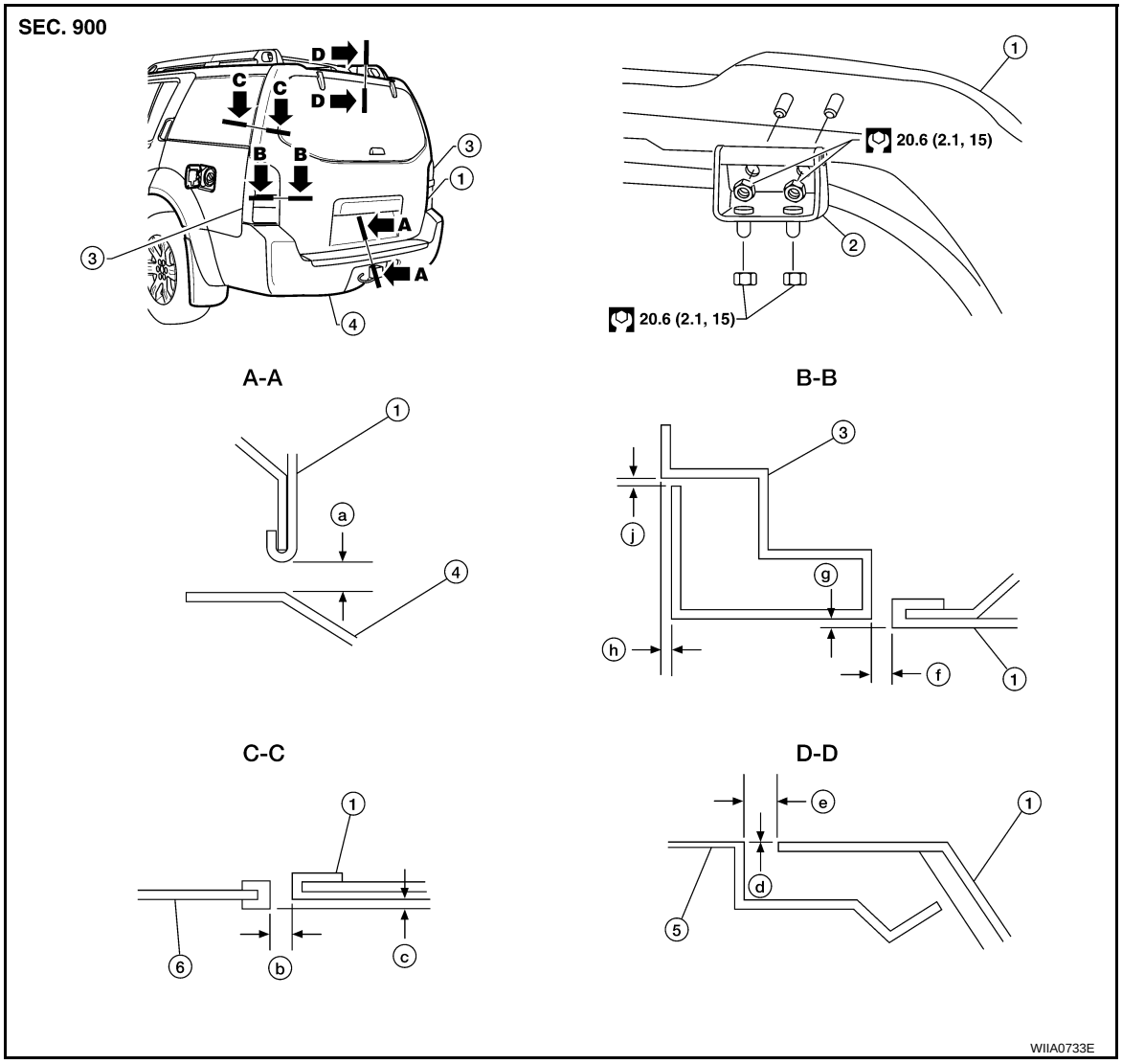

1.	Back door assembly	2.	Back door hinge	3.	Tail lamp assembly
4.	Rear bumper fascia	5.	Roof	6.	Side window glass
a.	7.2 ± 2.0 mm (0.28 ± 0.06 in)	b.	6.0 ± 1.5 mm (0.24 ± 0.06 in)	c.	2.0 ± 2.0 mm (0.08 ± 0.08 in)
d.	1.0 ± 1.5 mm (0.04 ± 0.06 in)	e.	8.0 ± 1.5 mm (0.31 ± 0.06 in)	f.	5.3 ± 2.0 mm (0.21 ± 0.08 in)
g.	0.8 ± 2.0 mm (0.03 ± 0.08 in)	h.	0.8 ± 1.0 mm (0.03 ± 0.04 in)	j.	2.0 ± 1.0 mm (0.08 ± 0.04 in)

1. Open and support the back door.
2. Slightly loosen the hinge nuts.
3. Reposition the door as necessary and tighten the nuts.
4. Confirm the adjustment. Repeat as necessary to obtain the desired fit.

Striker adjustment

BODY SIDE DOORS

1. Adjust the striker so that it becomes parallel with the lock insertion direction.

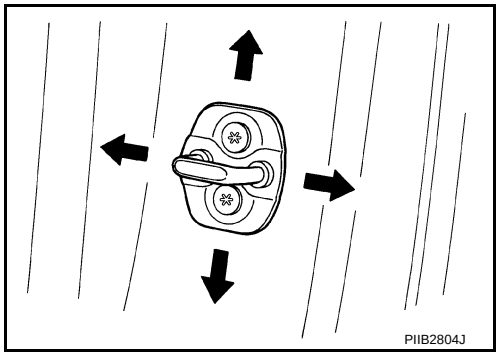

BACK DOOR

1. Adjust the striker so that it becomes parallel with the lock insertion direction.

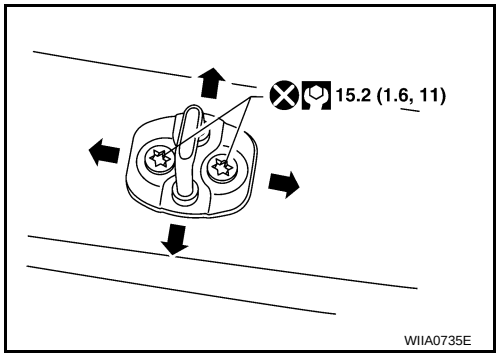

Removal and Installation

INFOID:0000000001563787

FRONT DOOR

CAUTION:

- **When removing and installing the door assembly, support the door with a jack and shop cloth to protect the door and body.**
- **When removing and installing door assembly, be sure to carry out the fitting adjustment.**
- **Check the hinge rotating part for poor lubrication. If necessary, apply "body grease".**

1. Remove the front door glass and regulator. Refer to GW-14, "Front Door Glass Regulator".
2. Remove the door harness.
3. Remove the check link bolt from the hinge pillar.

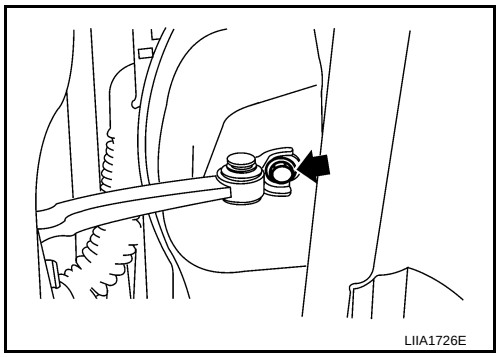

4. Remove the door-side hinge nuts, and the door assembly.

Installation is in the reverse order of removal.

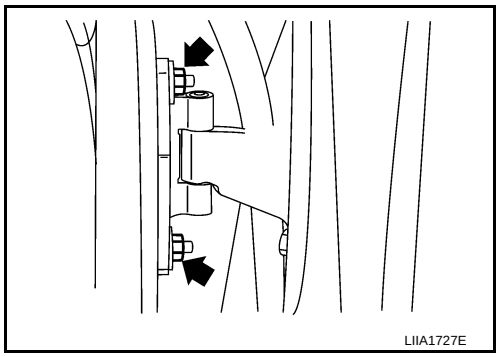

REAR DOOR

1. Remove the door finisher. Refer to INT-10, "Removal and Installation".
2. Remove the inner seal.
3. Remove the rear door glass and regulator. Refer to GW-18, "Rear Door Glass Regulator".
4. Remove the door harness.
5. Remove the check link bolt from the hinge pillar.

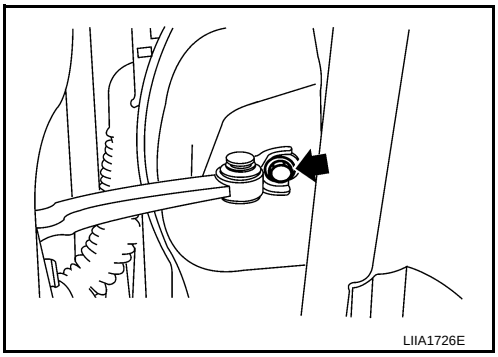

6. Remove the door-side hinge nuts, and remove the door assembly.

Installation is in the reverse order of removal.

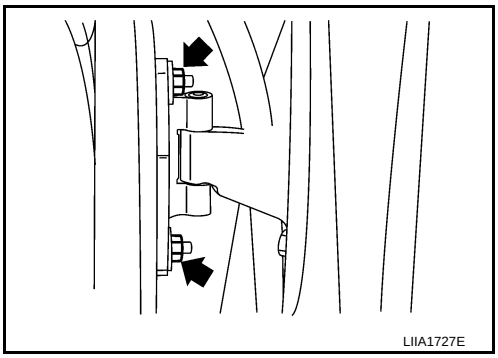

BACK DOOR

1. Remove the glass hatch. Refer to GW-23, "Removal and Installation".
2. Remove the license lamp finisher. Refer to EXT-19, "Removal and Installation".
3. Remove the back door lock assembly. Refer to DLK-194, "Component Structure".
4. Remove the back door wire harness.
5. Remove the rear washer nozzle and hose from the back door. Refer to WW-54, "Removal and Installation"

CAUTION:
Two technicians should be used to avoid damaging the back door during removal.

6. Support the back door.
7. Remove the back door stays.
8. Remove the door side nuts and the back door assembly.

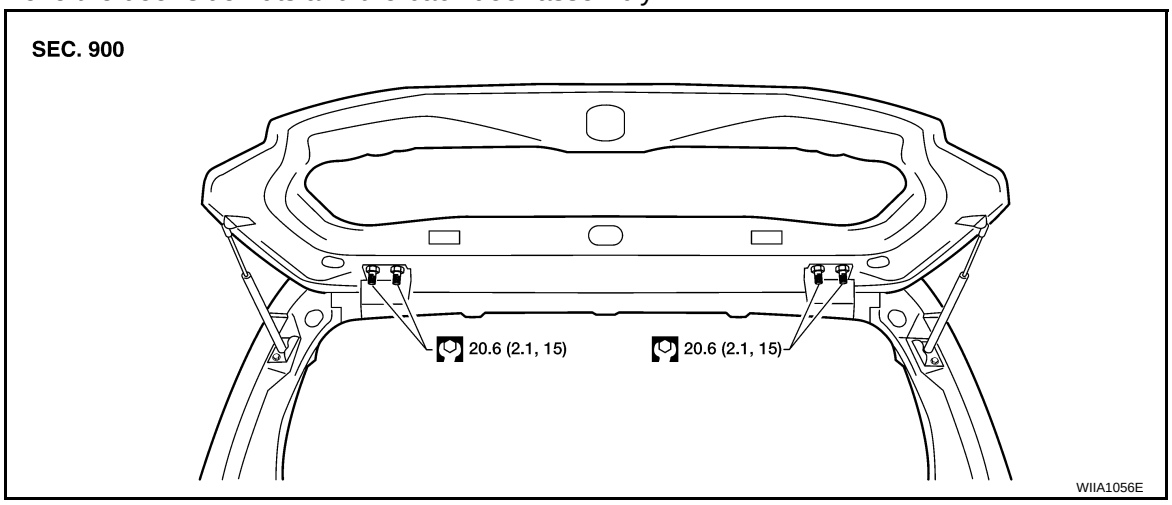

Installation is in the reverse order of removal.

- Align the back door. Refer to DLK-185, "Fitting Adjustment".

FRONT DOOR LOCK

Component Structure

INFOID:0000000001563788

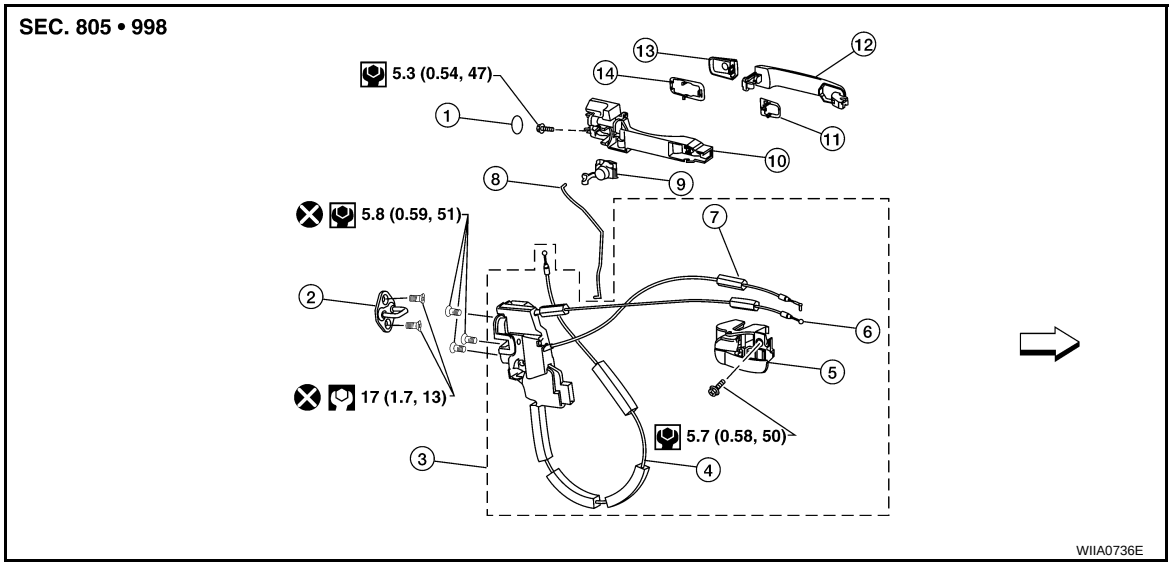

1.	Grommet	2.	Front door striker	3.	Door lock assembly
4.	Outside handle cable	5.	Inside handle assembly	6.	Inside handle cable
7.	Door lock cable	8.	Key cylinder rod (Driver side only)	9.	Door key cylinder
10.	Outside handle bracket	11.	Front gasket	12.	Outside handle
13.	Door key cylinder assembly (Driver side) Outside handle escutcheon (Passenger side)	14.	Rear gasket	⇐	Vehicle front

Removal and Installation

INFOID:0000000001563789

REMOVAL

1. Remove the front door window regulator. Refer to GW-14, "Front Door Glass Regulator".
2. Remove door side grommet, and remove door key cylinder assembly (driver side) or outside handle escutcheon (passenger side) bolts (TORX T30) from grommet hole.

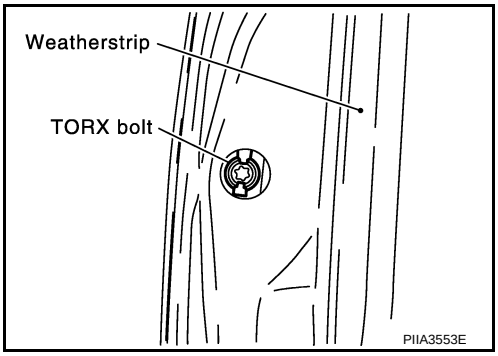

3. While pulling the outside handle (1), remove door key cylinder assembly or escutcheon (2).

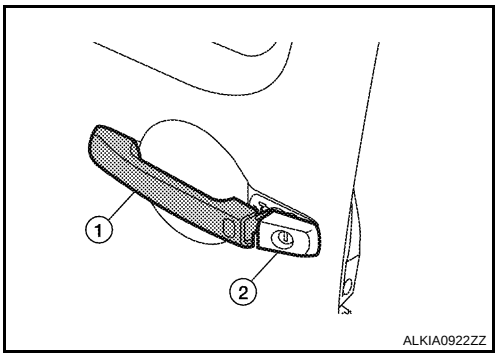

4. If equipped, separate the door key cylinder rod from the door key cylinder assembly.
5. Disconnect the intelligent key electrical connectors.
6. While pulling outside handle (1), slide toward rear of vehicle (2) to remove outside handle.

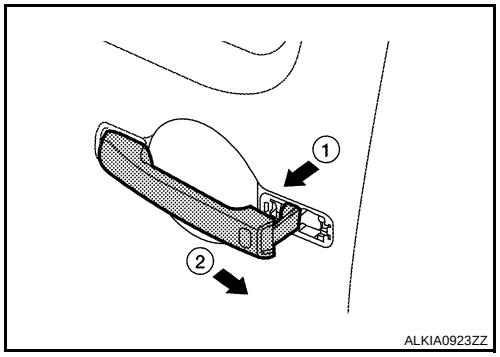

7. Remove the front gasket (1) and rear gasket (2).

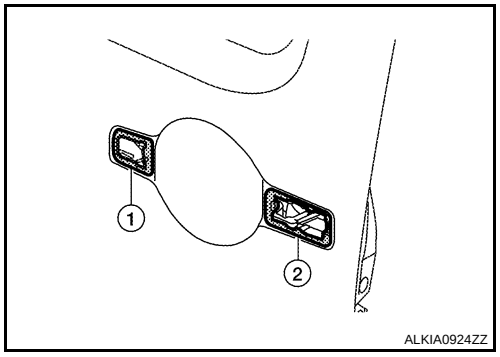

8. Remove the TORX bolts (T30), remove the door lock assembly.

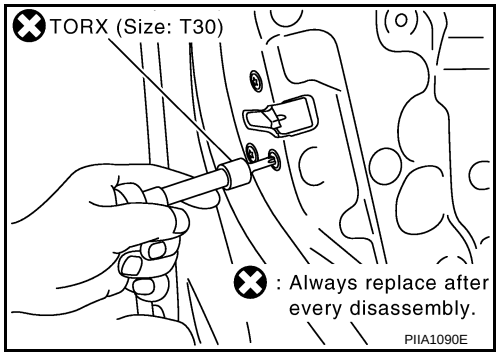

9. While pulling outside handle bracket, slide toward rear of vehicle to remove outside handle bracket and door lock assembly as shown.

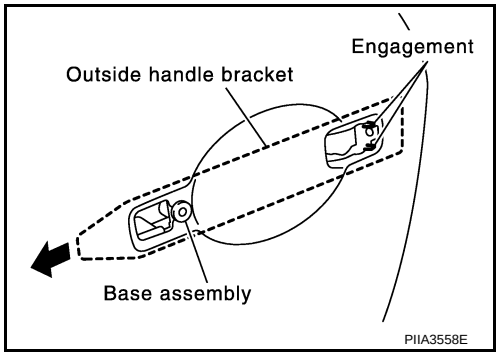

10. Disconnect the door lock actuator electrical connector.

11. Separate the outside handle cable connection from the outside handle bracket.

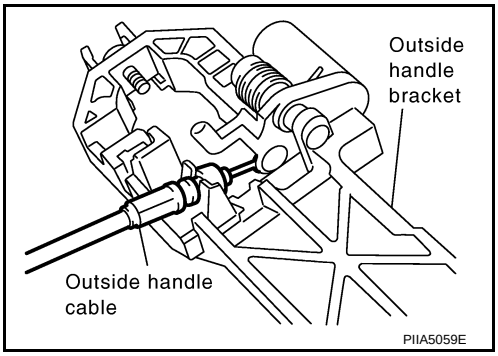

INSTALLATION

Installation is in the reverse order of removal.

CAUTION:

To install the key cylinder rod, be sure to rotate the key cylinder rod holder until a click is felt.

Disassembly and Assembly

INFOID:0000000001563790

DOOR KEY CYLINDER ASSEMBLY

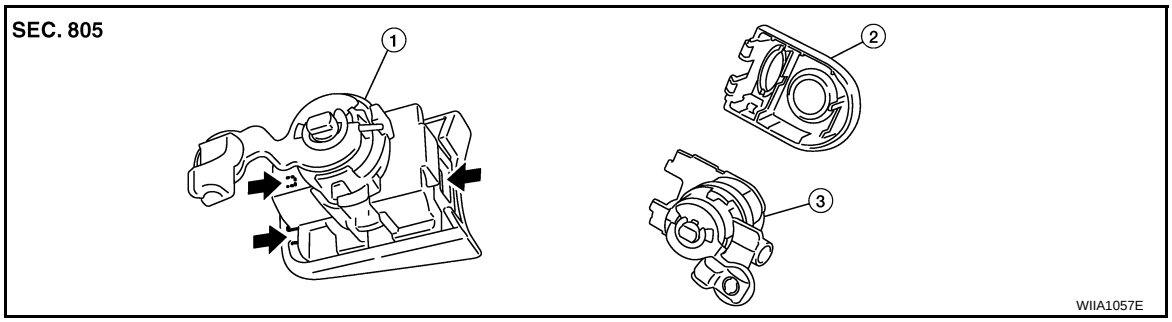

1. Door key cylinder assembly
2. Door key cylinder escutcheon
3. Door key cylinder

⇐ Pawl

Release the key cylinder escutcheon pawls to remove the door key cylinder.

REAR DOOR LOCK

Component Structure

INFOID:0000000001563791

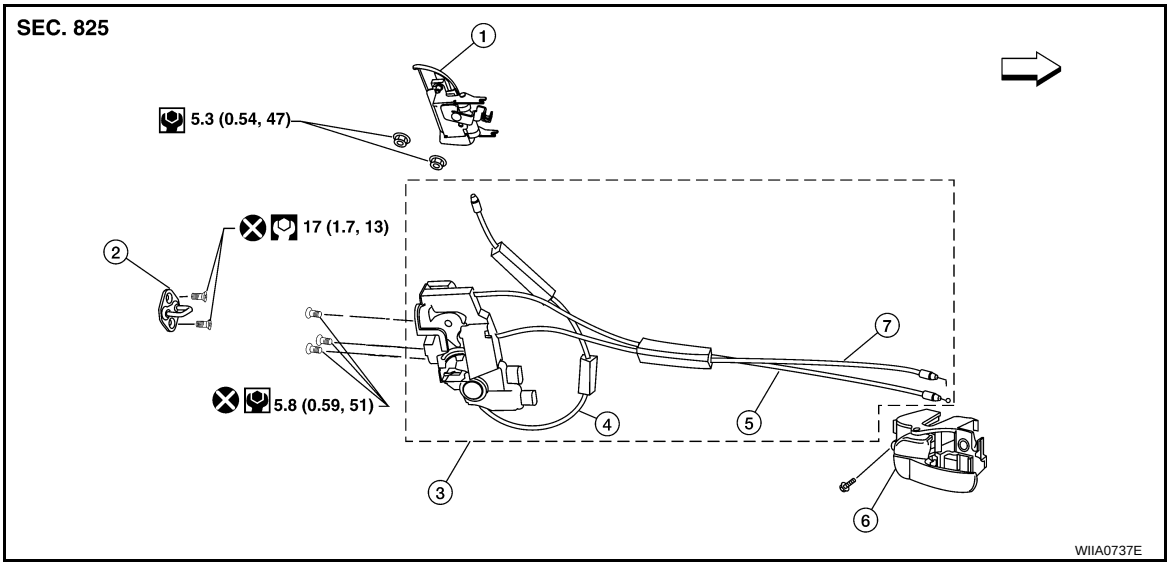

1.	Outside door handle	2.	Rear door striker	3.	Rear door lock assembly
4.	Outside door handle cable	5.	Inside door handle cable	6.	Inside door handle assembly
7.	Door lock cable	⇐	Vehicle front		

Removal and Installation

INFOID:0000000001563792

REMOVAL

1. Remove the rear door window regulator. Refer to GW-18, "Rear Door Glass Regulator".
2. Remove door grommets, and remove outside handle nuts from the hole.
3. Remove outside handle.
4. Disconnect the outside handle cable connection.
5. Remove the inside door handle.
6. Disconnect the door lock and inside door handle cables from the inside door handle.
7. Disconnect the door lock actuator connector and remove the assembly.

INSTALLATION

Installation is in the reverse order of removal.

BACK DOOR LOCK

Component Structure

INFOID:0000000001563793

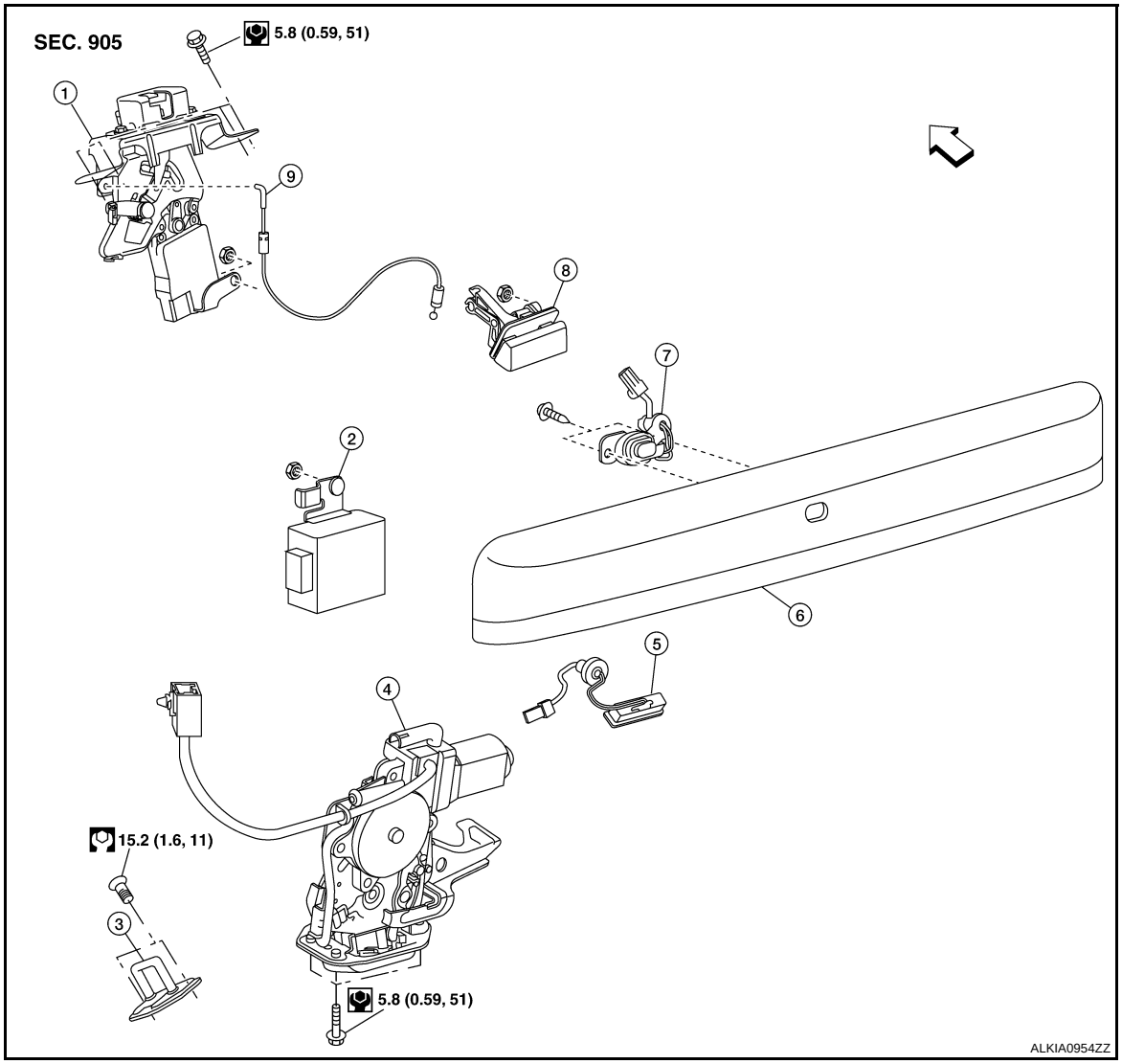

1. Glass hatch latch assembly
2. Back door control assembly
3. Back door striker
4. Back door latch assembly
5. Back door release button
6. Back door finisher
7. Key button
8. Glass hatch release handle
9. Glass hatch release cable

⇐ Vehicle front

BASIC INSPECTION

DIAGNOSIS AND REPAIR WORKFLOW

Work Flow

INFOID:0000000001563655

OVERALL SEQUENCE

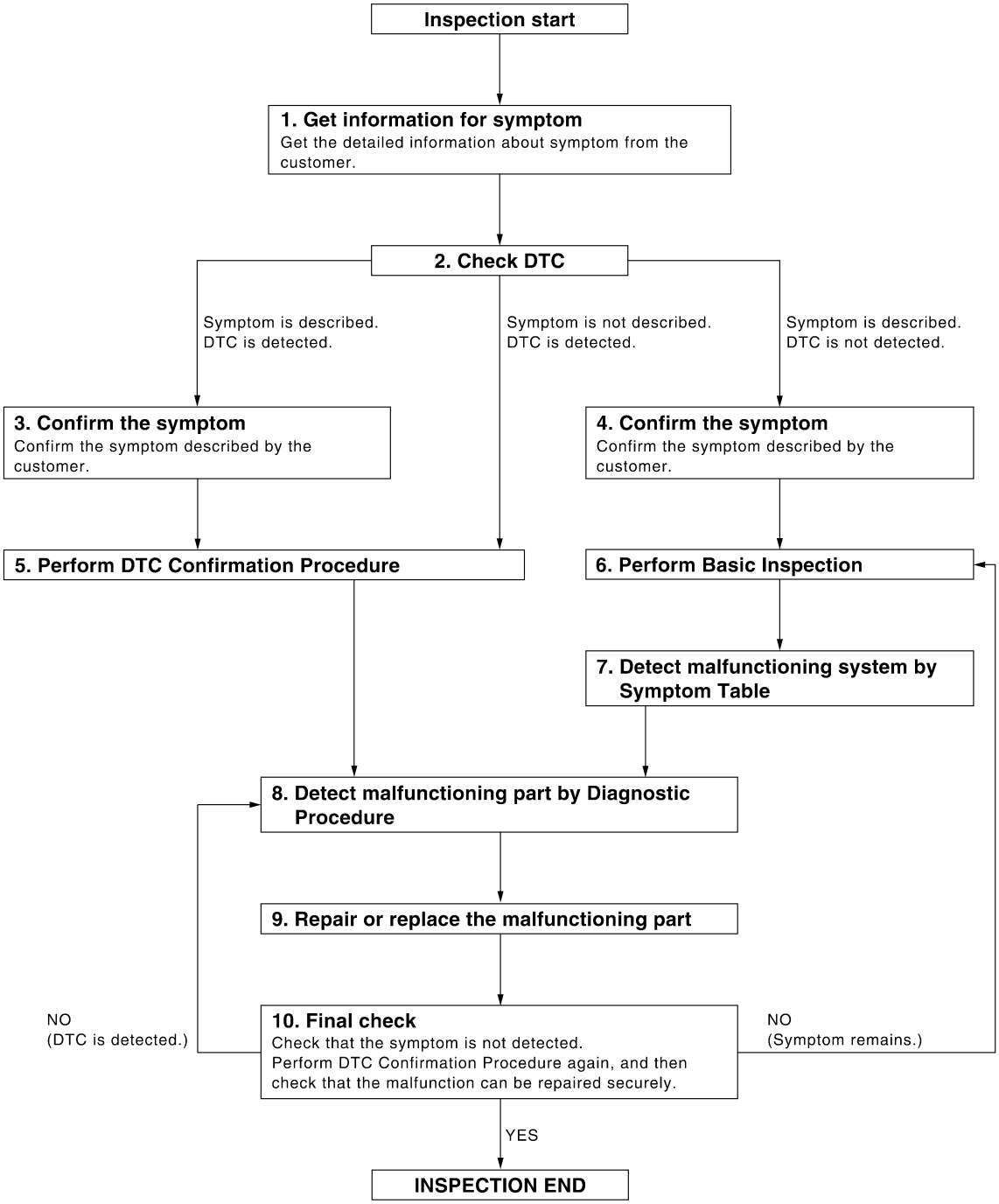

ALKIA0246GB

DETAILED FLOW

1. GET INFORMATION FOR SYMPTOM

Get the detailed information from the customer about the symptom (the condition and the environment when the incident/malfunction occurred).

>> GO TO 2.

2. CHECK DTC

1. Check DTC.
2. Perform the following procedure if DTC is displayed.
- Record DTC and freeze frame data (Print them out with CONSULT-III.)
- Erase DTC.
- Study the relationship between the cause detected by DTC and the symptom described by the customer.
3. Check related service bulletins for information.

Is any symptom described and any DTC detected?

Symptom is described, DTC is displayed>>GO TO 3.
Symptom is described, DTC is not displayed>>GO TO 4.
Symptom is not described, DTC is displayed>>GO TO 5.

3. CONFIRM THE SYMPTOM

Confirm the symptom described by the customer.
Connect CONSULT-III to the vehicle in “DATA MONITOR” mode and check real time diagnosis results.
Verify relation between the symptom and the condition when the symptom is detected.

>> GO TO 5.

4. CONFIRM THE SYMPTOM

Confirm the symptom described by the customer.
Connect CONSULT-III to the vehicle in “DATA MONITOR ” mode and check real time diagnosis results.
Verify relation between the symptom and the condition when the symptom is detected.

>> GO TO 6.

5. PERFORM DTC CONFIRMATION PROCEDURE

Perform DTC Confirmation Procedure for the displayed DTC, and then check that DTC is detected again.
At this time, always connect CONSULT-III to the vehicle, and check diagnostic results in real time.
If two or more DTCs are detected, refer to DLK-284, "DTC Inspection Priority Chart" and determine trouble diagnosis order.

NOTE:

- Freeze frame data is useful if the DTC is not detected.
- Perform Component Function Check if DTC Confirmation Procedure is not included in Service Manual. This simplified check procedure is an effective alternative though DTC cannot be detected during this check.
  If the result of Component Function Check is NG, it is the same as the detection of DTC by DTC Confirmation Procedure.

Is DTC detected?

Yes >> GO TO 8.
No >> Refer to GI-51, "Intermittent Incident".

6. PERFORM BASIC INSPECTION

Perform DLK-195, "Work Flow".

Inspection End>>GO TO 7.

7. DETECT MALFUNCTIONING SYSTEM BY SYMPTOM TABLE

Detect malfunctioning system according to DLK-291, "Symptom Table" based on the confirmed symptom in step 4, and determine the trouble diagnosis order based on possible causes and symptom.

>> GO TO 8.

8. DETECT MALFUNCTIONING PART BY DIAGNOSTIC PROCEDURE

Inspect according to Diagnostic Procedure of the system.

NOTE:

The Diagnostic Procedure described based on open circuit inspection. A short circuit inspection is also required for the circuit check in the Diagnostic Procedure.

Is malfunctioning part detected?

Yes >> GO TO 9.
No >> Check voltage of related BCM terminals using CONSULT-III.

9. REPAIR OR REPLACE THE MALFUNCTIONING PART

1. Repair or replace the malfunctioning part.
2. Reconnect parts or connectors disconnected during Diagnostic Procedure again after repair and replacement.
3. Check DTC. If DTC is displayed, erase it.

>> GO TO 10.

10. FINAL CHECK

When DTC was detected in step 2, perform DTC Confirmation Procedure or Component Function Check again, and then check that the malfunction have been repaired securely.

When symptom was described from the customer, refer to confirmed symptom in step 3 or 4, and check that the symptom is not detected.

OK or NG

NG (DTC is detected)>>GO TO 8.
NG (Symptom remains)>>GO TO 6.
OK >> **INSPECTION END**

INSPECTION AND ADJUSTMENT

ADDITIONAL SERVICE WHEN REPLACING CONTROL UNIT

ADDITIONAL SERVICE WHEN REPLACING CONTROL UNIT : Description

INFOID:0000000001563656

Perform the system initialization when replacing BCM, replacing Intelligent Key or registering an additional Intelligent Key.

ADDITIONAL SERVICE WHEN REPLACING CONTROL UNIT : Special Repair Requirement

INFOID:0000000001563657

Refer to the CONSULT-III Operation Manual for the initialization procedure.

FUNCTION DIAGNOSIS

DOOR LOCK FUNCTION

DOOR LOCK AND UNLOCK SWITCH

DOOR LOCK AND UNLOCK SWITCH : System Diagram

INFOID:0000000001563658

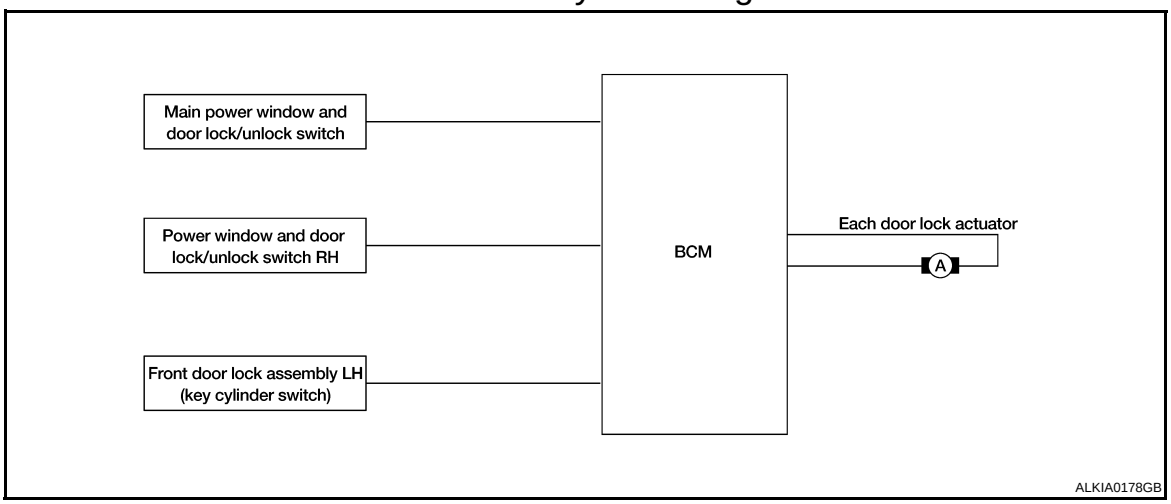

DOOR LOCK AND UNLOCK SWITCH : System Description

INFOID:0000000001563659

Switch	Input/output signal to BCM	BCM function	Actuator
Main power window and door lock/unlock switch	Door lock/unlock signal	Door lock/unlock control	Door lock actuator
Power window and door lock/ unlock switch			
Door key cylinder switch			

DOOR LOCK FUNCTION

Functions Available by Operating the Door Lock and Unlock Switches on Driver Door and Passenger Door

- Interlocked with the locking operation of door lock and unlock switch, door lock actuators of all door lock actuators are locked.
- Interlocked with the unlocking operation of door lock and unlock switch, door lock actuators of all door lock actuators are unlocked.

Functions Available by Operating the Key Cylinder Switch on Driver Door

- Interlocked with the locking operation of door key cylinder, door lock actuators of all door lock actuators are locked.

Selective Unlock Operation

- When door key cylinder is unlocked, door lock actuator driver side is unlocked.
- When door key cylinder is unlocked for the second time within 5 seconds after the first operation, door lock actuators on all doors are unlocked.

Select unlock operation mode can be changed using DOOR LOCK-UNLOCK SET mode in “WORK SUPPORT”. Refer to DLK-207, "DOOR LOCK : CONSULT-III Function (BCM - DOOR LOCK)".

Key Reminder System

Refer to DLK-241, "Diagnosis Procedure".

DOOR LOCK AND UNLOCK SWITCH : Component Parts Location

INFOID:0000000001563660

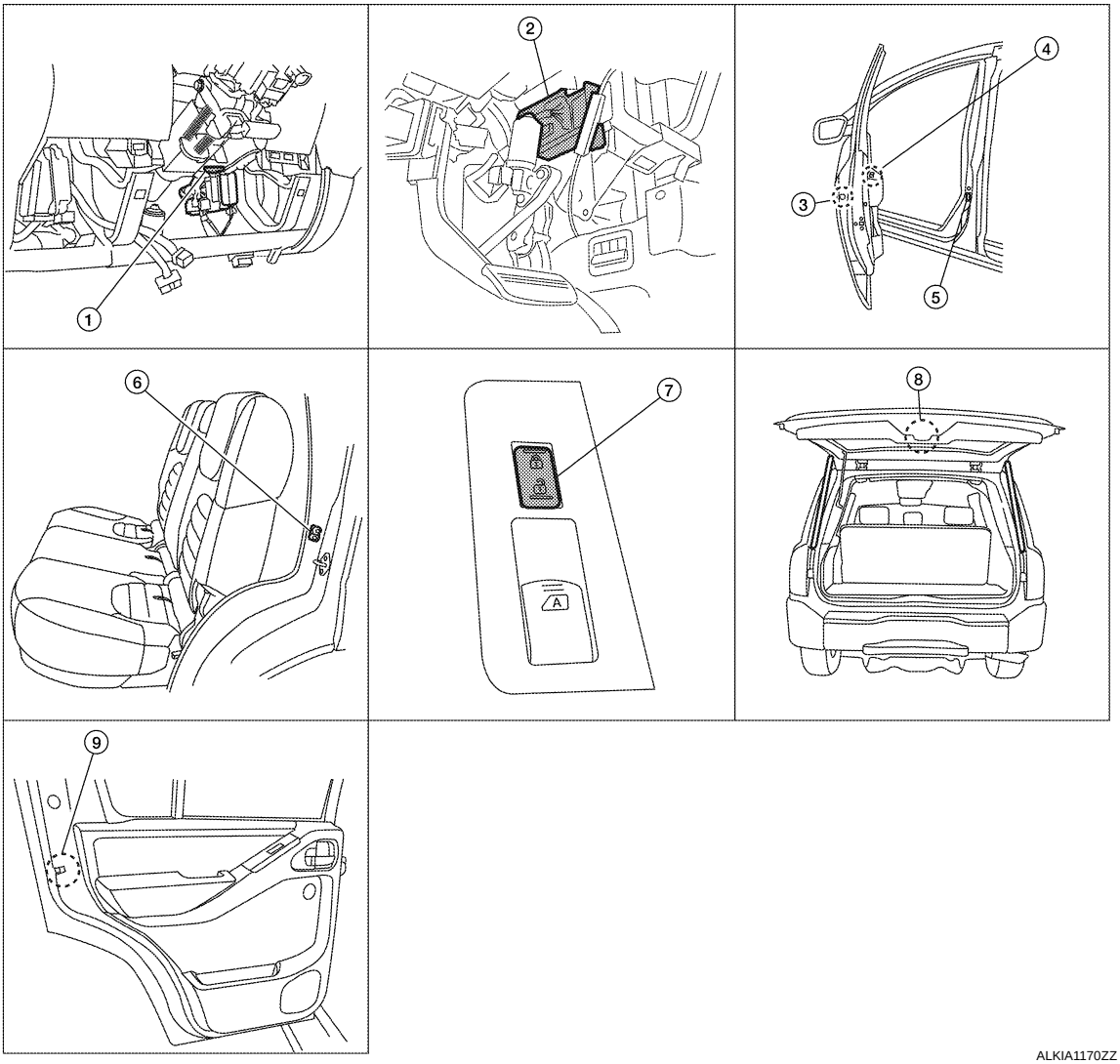

ALKIA1170ZZ

1. Key switch M27
2. BCM M18, M19, M20 (view with instrument panel LH removed)
3. Front door lock assembly LH (key cylinder switch) D14
   Front door lock actuator RH D114
4. Main power window and door lock/unlock D7, D8
5. Front door switch
   LH B8
   RH B108
6. Rear door switch
   LH B18
   RH B116
7. Power window and door lock/unlock switch RH D105
8. Back door cinching latch unit (door ajar switch) D502
   Back door lock actuator D508
9. Rear door lock actuator
   LH D205
   RH D305

DOOR LOCK AND UNLOCK SWITCH : Component Description

INFOID:0000000001563661

Item	Function
BCM	Controls the door lock function and room lamp function.
Door lock and unlock switch	Transmits lock or unlock signal to BCM.
Door lock actuator	Receives lock/unlock signal from BCM and locks/unlocks each door.
Door switch	Transmits door open/close condition to BCM.

REMOTE KEYLESS ENTRY

REMOTE KEYLESS ENTRY : System Diagram

INFOID:0000000001563662

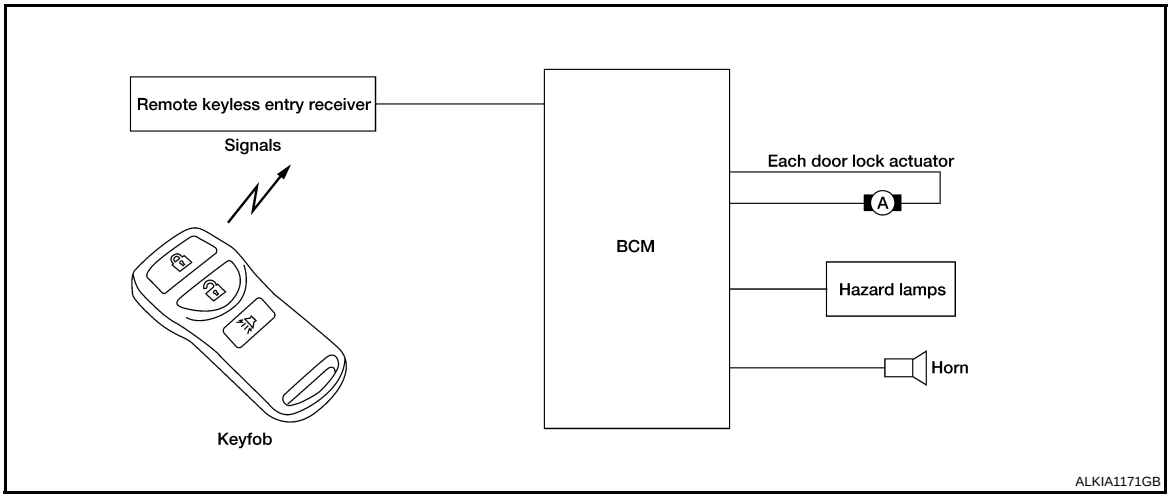

REMOTE KEYLESS ENTRY : System Description

INFOID:0000000001563663

OPERATED PROCEDURE

- When the keyfob is operated, the signal from the keyfob is sent and the remote keyless entry receiver receives the signal and sends it to the BCM. The BCM only locks/unlocks the doors if the ID number matches. (Remote control entry functions)
- Using the keyfob, the transmitter sends radio waves to the remote keyless entry receiver, which then sends the received waves to the BCM. Only if the ID number matches does the BCM lock/unlock the doors. (Remote control door function)
- Unless the key is inserted into the ignition key cylinder or one of the doors is opened within 1 minute after the UNLOCK switch on the keyfob is pressed, all the doors are automatically locked. (Auto lock function)
- When a door is locked or unlocked, the vehicle turn signal lamps flash and the horn sounds to verify operation. (Active check function)
- When the key is in the ignition key cylinder (when the key switch is ON) and one of the doors is open, the door lock function does not work even when the door lock is operated with the keyfob.
- Keyfob ID set up is available.
- If a keyfob is lost, a new keyfob can be set up. A maximum of 5 IDs can be set up simultaneously.

REMOTE CONTROL ENTRY FUNCTIONS

- When a button on the keyfob is operated, the signal is sent from the keyfob and received by the remote keyless entry receiver.
- The received signal is sent to the BCM and compared with the registered ID number.
- If the ID number matches, the BCM sends the lock/unlock signal to each door lock actuator.
- When the door lock actuators receive this signal, each operates to lock/unlock its door.
- BCM locks all doors with input of LOCK signal from keyfob.
- When an UNLOCK signal is sent from keyfob once, driver's door will be unlocked.
- Then, if an UNLOCK signal is sent from keyfob again within 5 seconds, all other doors will be unlocked.

REMOTE CONTROL ENTRY OPERATION CONDITIONS

Keyfob operation	Operation condition
Door lock operation (locking)	• With key removed (key switch: OFF) • Closing all doors (door switch: OFF)
Door lock operation (unlocking)	With key removed (key switch: OFF)

AUTO LOCK FUNCTION

Operation Description

- Unless the key is inserted into the ignition key cylinder, one of the doors is opened, or the keyfob is operated within 1 minute after a door lock is unlocked by keyfob operation, all the doors are automatically locked.
  The 1 minute timer count is executed by the BCM and after 1 minute, the BCM sends the lock signal to all doors.

Lock operations are the same as for the remote control entry function.

ACTIVE CHECK FUNCTION

Operation Description

When a door is locked or unlocked by keyfob operation, the vehicle turn signals flash and the horn sounds to verify operation.

- When a button on the keyfob is operated, the signal is sent from the remote controller and received by the keyless remote entry receiver.
- The received signal is sent to the BCM and compared with the registered ID number.
- If the ID number matches, the BCM uses communication to send the turn signal flashing and horn signal to the IPDM E/R.
- The IPDM E/R flashes the turn signal lamps and sounds the horn for each keyfob operation.

Operating function of hazard and horn reminder

	C mode		S mode	
Keyfob operation	Lock	Unlock	Lock	Unlock
Hazard warning lamp flash	Twice	Once	Twice	—
Horn sound	Once	—	—	—

HAZARD AND HORN REMINDER

BCM output to IPDM E/R for horn reminder signal as DATA LINE (CAN-H line and CAN-L line).
The hazard and horn reminder has C mode (horn chirp mode) and S mode (non-horn chirp mode).

How to change hazard and horn reminder mode

With CONSULT-III

Hazard and horn reminder can be changed using “WORK SUPPORT” mode in “MULTI ANSWER BACK SET".

Without CONSULT-III

Refer to Owner's Manual for instructions.

INTERIOR LAMP OPERATION

When the following input signals are both supplied:

- all door switches are in the OFF position. (when all the doors are closed);
- interior lamp switch is in DOOR position.

Remote keyless entry system turns on interior lamp and ignition keyhole illumination (for 30 seconds) with input of UNLOCK signal from keyfob.

PANIC ALARM OPERATION

When key switch is OFF (when ignition key is not inserted in key cylinder), remote keyless entry system turns on and off horn and headlamp intermittently with input of PANIC ALARM signal from keyfob.
The alarm automatically turns off after 25 seconds or when BCM receives any signal from keyfob.

KEYLESS POWER WINDOW DOWN (OPEN) OPERATION

When keyfob unlock switch is turned ON with ignition switch OFF, and the switch is detected to be ON continuously for more than 1 second, the driver's door and passenger's door power windows are simultaneously opened.
Power window is operated to open and the operation continues as long as the keyfob unlock switch is pressed.

REMOTE KEYLESS ENTRY : Component Parts Location

INFOID:0000000001563664

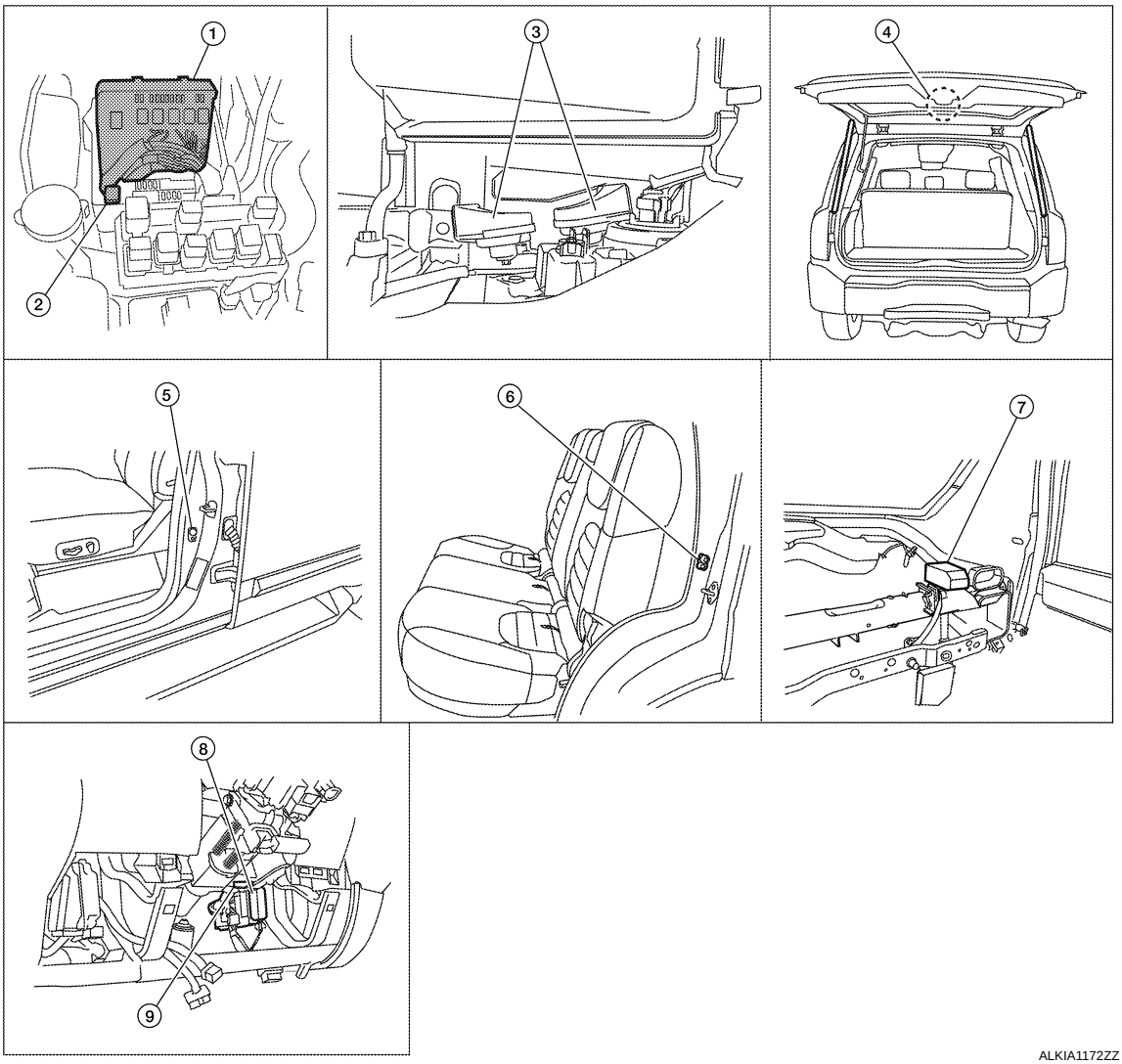

ALKIA1172ZZ

1. IPDM E/R E122, E124
2. Horn relay H-1 (view with cover removed)
3. Horn E3 (behind front combination lamp LH)
4. Back door cinching latch unit (door ajar switch) D502
5. Front door switch LH B8 RH B108
6. Rear door switch LH B18 RH B116
7. Remote keyless entry receiver M120 (view with instrument panel RH removed)
8. BCM M18, M19, M20 (view with instrument panel LH removed)
9. Key switch M27

REMOTE KEYLESS ENTRY : Component Description

INFOID:0000000001563665

Item	Function
BCM	Controls the door lock function and room lamp function.
Door lock and unlock switch	Transmits lock or unlock signal to BCM.
Door switch	Transmits door open/close condition to BCM.
Remote keyless entry receiver	Receives lock/unlock signal from the keyfob, and then transmits to BCM.

BACK DOOR OPENER FUNCTION

System Diagram

INFOID:0000000001563666

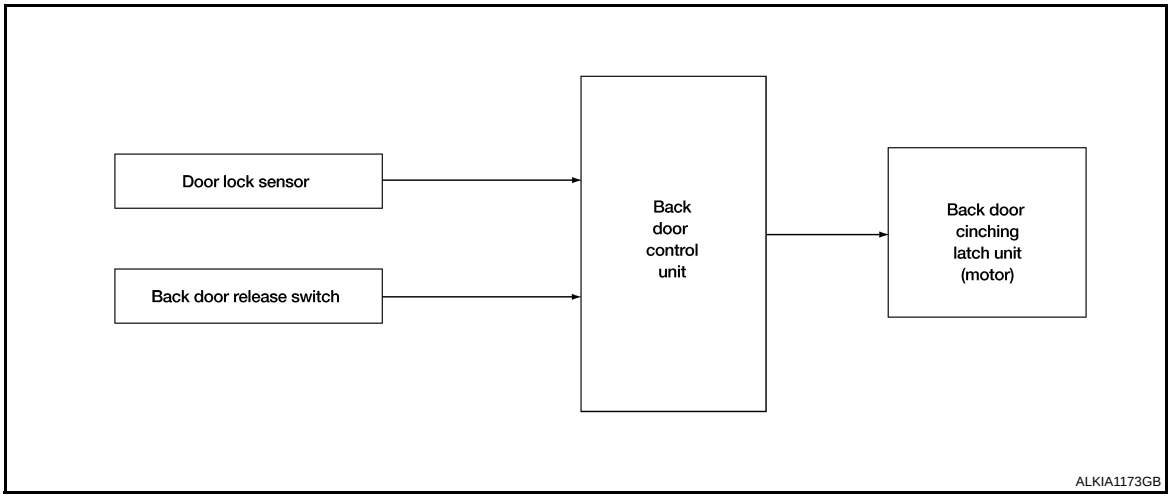

System Description

INFOID:0000000001563667

BACK DOOR OPENER OPERATION

The back door system consists of back door release switch, back door control unit, and back door cinching latch unit which contains a motor to pull the back door completely shut during closing. Back door lock opening is allowed when the right front door is open only.

Component Parts Location

INFOID:0000000001563668

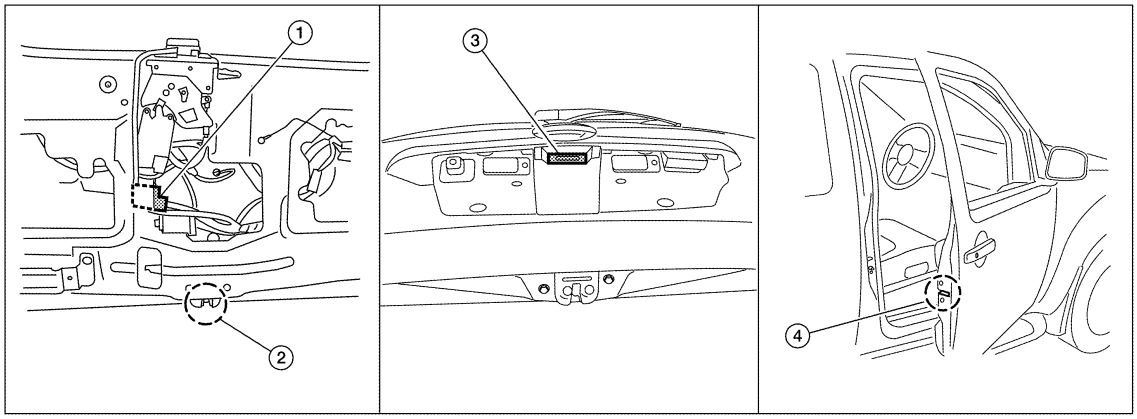

1. Back door control unit D509 (view with back door panel removed)
2. Back door cinching latch unit D502
3. Back door release switch D510
4. Door lock sensor D103

Component Description

INFOID:0000000001563669

Item	Function
Back door release switch	Transmits back door open operation signal to back door control unit.
Back door control unit	Transmits back door open operation to back door motor.
Back door close switch	Transmits back door close switch signal to back door control unit.
Back door neutral switch	Transmits back door neutral switch signal to back door control unit.

Item	Function
Back door half switch	Transmits back door half switch signal to back door control unit.
Door lock sensor	Transmits right front door unlock position to back door control unit.

HOMELINK UNIVERSAL TRANSCEIVER

Component Description

INFOID:0000000001563670

Item	Function	Reference page
Homelink universal transceiver	A maximum of 3 radio signals can be stored and transmitted to operate the garage door, etc.	Refer to Owner's Manual

DIAGNOSIS SYSTEM (BCM)

COMMON ITEM

COMMON ITEM : CONSULT-III Function (BCM - COMMON ITEM)

INFOID:0000000001563671

APPLICATION ITEM

CONSULT-III performs the following functions via CAN communication with BCM.

Diagnosis mode	Function Description
WORK SUPPORT	Changes the setting for each system function.
SELF-DIAG RESULTS	Displays the diagnosis results judged by BCM. Refer to DLK-284, "DTC Index".
CAN DIAG SUPPORT MNTR	Monitors the reception status of CAN communication viewed from BCM.
DATA MONITOR	The BCM input/output signals are displayed.
ACTIVE TEST	The signals used to activate each device are forcibly supplied from BCM.
ECU IDENTIFUCATION	The BCM part number is displayed.
CONFIGURATION	This function is not used even though it is displayed.

SYSTEM APPLICATION

BCM can perform the following functions for each system.

NOTE:

It can perform the diagnosis modes except the following for all subsystem selection items.

System	Sub system selection item	Diagnosis mode		
		WORK SUPPORT	DATA MONITOR	ACTIVE TEST
Door lock	DOOR LOCK	×	×	×
Warning chime	BUZZER		×	×
Interior room lamp timer	INT LAMP	×	×	×
Turn signal and hazard warning lamps	FLASHER	×	×	×
BCM	BCM	×		
Interior room lamp battery saver	BATTERY SAVER	×	×	×
Back door open	TRUNK		×	
RAP system	RETAINED PWR		×	

DOOR LOCK

DOOR LOCK : CONSULT-III Function (BCM - DOOR LOCK)

INFOID:0000000001563672

BCM CONSULT-III FUNCTION

CONSULT-III performs the following functions via CAN communication with BCM.

Diagnosis mode	Function Description
WORK SUPPORT	Changes the setting for each system function.
DATA MONITOR	The BCM input/output signals are displayed.
ACTIVE TEST	The signals used to activate each device are forcibly supplied from BCM.

WORK SUPPORT

Monitor item	Description
DOOR LOCK-UNLOCK SET	Selective unlock function mode can be changed to operate (WITH) or not operate (WITHOUT) with this mode.

DATA MONITOR

Monitor Item	Contents
REQ SW-DR	Indicates [ON/OFF] condition of door request switch (driver side).
REQ SW-AS	Indicates [ON/OFF] condition of door request switch (passenger side).
REQ SW-BD/TR	Indicates [ON/OFF] condition of trunk opener request switch.
DOOR SW-DR	Indicates [ON/OFF] condition of front door switch (driver side).
DOOR SW-AS	Indicates [ON/OFF] condition of front door switch (passenger side).
DOOR SW-RR	Indicates [ON/OFF] condition of rear door switch RH.
DOOR SW-RL	Indicates [ON/OFF] condition of rear door switch LH.
DOOR SW-BK	Indicates [ON/OFF] condition of back door switch.
CDL LOCK SW	Indicates [ON/OFF] condition of lock signal from door lock unlock switch.
CDL UNLOCK SW	Indicates [ON/OFF] condition of unlock signal from door lock unlock switch.
KEY CYL LK-SW	Indicates [ON/OFF] condition of lock signal from key cylinder.
KEY CYL UN-SW	Indicates [ON/OFF] condition of unlock signal from key cylinder.

ACTIVE TEST

Test item	Description
DOOR LOCK	This test is able to check door lock/unlock operation. • The all door lock actuators are locked when “LOCK” on CONSULT-III screen is touched. • The all door lock actuators are unlocked when “ALL UNLK” on CONSULT-III screen is touched. • The door lock actuator (driver side) is unlocked when “DR UNLK” on CONSULT-III screen is touched. • The door lock actuator (passenger side) is unlocked when “AS UNLK” on CONSULT- III screen is touched. • The door lock actuator (other) is unlocked when “OTR ULK” on CONSULT-III screen is touched.

REMOTE KEYLESS ENTRY

REMOTE KEYLESS ENTRY : CONSULT-III Function (BCM - RKE)

INFOID:0000000001563673

“MULTI REMOTE ENT”

Data Monitor

Monitored Item	Description
DOOR SW-AS	Indicates [ON/OFF] condition of front door switch RH.
DOOR SW-RR	Indicates [ON/OFF] condition of rear door switch RH.
DOOR SW-RL	Indicates [ON/OFF] condition of rear door switch LH.
DOOR SW-DR	Indicates [ON/OFF] condition of front door switch LH.
BACK DOOR SW	Indicates [ON/OFF] condition of back door switch.
KEY ON SW	Indicates [ON/OFF] condition of key switch.
ACC ON SW	Indicates [ON/OFF] condition of ignition switch in ACC position.
IGN ON SW	Indicates [ON/OFF] condition of ignition switch in ON position.
KEYLESS PANIC	Indicates [ON/OFF] condition of panic signal from keyfob.
KEYLESS UNLOCK	Indicates [ON/OFF] condition of unlock signal from keyfob.
KEYLESS LOCK	Indicates [ON/OFF] condition of lock signal from keyfob.
KEY CYL LK-SW	Indicates [ON/OFF] condition of lock signal from door key cylinder switch.
KEY CYL UN-SW	Indicates [ON/OFF] condition of unlock signal from door key cylinder switch.
KEYLESS PBD	Indicates [ON/OFF] condition of power back door signal from keyfob.
CDL UNLOCK SW	Indicates [ON/OFF] condition of unlock signal from lock/unlock switch.
CDL LOCK SW	Indicates [ON/OFF] condition of lock signal from lock/unlock switch.

Monitored Item	Description
DOOR SW-RL	Indicates [ON/OFF] condition of rear door switch LH.
DOOR SW-RR	Indicates [ON/OFF] condition of rear door switch RH.
RKE LCK-UNLCK	Indicates [ON/OFF] condition of lock/unlock signal at the same time from keyfob.
RKE KEEP UNLK	Indicates [ON/OFF] condition of unlock signal from keyfob.

Active Test

Test Item	Description
FLASHER	This test is able to check right and left hazard reminder operation. The right hazard lamp turns on when “RH” on CONSULT-III screen is touched and the left hazard lamp turns on when "LH" on CONSULT-III screen is touched.
POWER WINDOW DOWN	This test is able to check power window down operation. The windows are lowered when “ON” on CONSULT-III screen is touched.
HORN	This test is able to check panic alarm and horn reminder operations. The alarm activate for 0.5 seconds after “ON” on CONSULT-III screen is touched.
DOOR LOCK	This test is able to check door lock operation. The doors lock and unlock based on the item on CONSULT-III screen touched.
TRUNK/BACK DOOR	This test is able to check back door actuator operation. The back door is opened when “OPEN” on CONSULT-III screen is touched.

Work Support

Test Item	Description
REMO CONT ID REGIST	Keyfob ID code can be registered.
REMO CONT ID ERASUR	Keyfob ID code can be erased.
REMO CONT ID CONFIR	It can be checked whether keyfob ID code is registered or not in this mode.
HORN CHIRP SET	Horn chirp function mode can be changed in this mode. The function mode will be changed when "CHANG SETT" on CONSULT-III screen is touched.
HAZARD LAMP SET	Hazard lamp function mode can be changed in this mode. The function mode will be changed when "CHANG SETT" on CONSULT-III screen is touched.
MULTI ANSWER BACK SET	Hazard and horn reminder mode can be changed in this mode. The reminder mode will be changed when “CHANG SETT” on CONSULT-III screen is touched.
AUTO LOCK SET	Auto locking function mode can be changed in this mode. The function mode will be changed when "CHANG SETT" on CONSULT-III screen is touched.
PANIC ALRM SET	Panic alarm operation mode can be changed in this mode. The operation mode will be changed when "CHANG SETT" on CONSULT-III screen is touched.
TRUNK OPEN SET	Back door opener operation mode can be changed in this mode. The operation mode will be changed when "CHANG SETT" on CONSULT-III screen is touched.
PW DOWN SET	Keyless power window down (open) operation mode can be changed in this mode. The operation mode will be changed when "CHANG SETT" on CONSULT-III screen is touched.

Hazard and horn reminder mode

	MODE 1 (C mode)		MODE 2 (S mode)		MODE 3		MODE 4		MODE 5		MODE 6	
Keyfob operation	Lock	Unlock	Lock	Unlock	Lock	Unlock	Lock	Unlock	Lock	Unlock	Lock	Unlock
Hazard warning lamp flash	Twice	Once	Twice	—	—	—	Twice	Once	Twice	—	—	Once
Horn sound	Once	—	—	—	—	—	—	—	Once	—	Once	—

Auto locking function mode

	MODE 1	MODE 2	MODE 3
Auto locking function	5 minutes	Nothing	1 minute

Panic alarm operation mode

	MODE 1	MODE 2	MODE 3
Keyfob operation	0.5 seconds	Nothing	1.5 seconds

Back door open operation mode

	MODE 1	MODE 2	MODE 3
Keyfob operation	0.5 seconds	Nothing	0.5 seconds

Keyless power window down operation mode

	MODE 1	MODE 2	MODE 3
Keyfob operation	3 seconds	Nothing	5 seconds

COMPONENT DIAGNOSIS

U1000 CAN COMM CIRCUIT

Description

INFOID:0000000001728445

CAN (Controller Area Network) is a serial communication line for real time applications. It is an on-vehicle multiplex communication line with high data communication speed and excellent error detection ability. Modern vehicle is equipped with many electronic control unit, and each control unit shares information and links with other control units during operation (not independent). In CAN communication, control units are connected with 2 communication lines (CAN H-line, CAN L-line) allowing a high rate of information transmission with less wiring. Each control unit transmits/receives data but selectively reads required data only.
CAN Communication Signal Chart. Refer to LAN-57, "CAN Communication Signal Chart".

DTC Logic

INFOID:0000000001728446

DTC DETECTION LOGIC

DTC	CONSULT-III display description	DTC Detection Condition	Possible cause
U1000	CAN COMM CIRCUIT	When BCM cannot communicate CAN communication signal continuously for 2 seconds or more.	In CAN communication system, any item (or items) of the following listed below is malfunctioning. • Transmission • Receiving (ECM) • Receiving (VDC/TCS/ABS) • Receiving (METER/M&A) • Receiving (TCM)

Diagnosis Procedure

INFOID:0000000001728447

1. PERFORM SELF DIAGNOSTIC

1. Turn ignition switch ON and wait for 2 second or more.
2. Check “Self Diagnostic Result”.

Is “CAN COMM CIRCUIT” displayed?

YES >> Refer to DLK-211, "Diagnosis Procedure".
NO >> Refer to GI-51, "Intermittent Incident".

U1010 CONTROL UNIT (CAN)

DTC Logic

INFOID:0000000001728448

DTC DETECTION LOGIC

DTC	CONSULT-III display description	DTC Detection Condition	Possible cause
U1010	CONTROL UNIT (CAN)	BCM detected internal CAN communication circuit malfunction.	BCM

Diagnosis Procedure

INFOID:0000000001728449

1. REPLACE BCM

When DTC [U1010] is detected, replace BCM.

>> Replace BCM.

Special Repair Requirement

INFOID:0000000001728450

1. REQUIRED WORK WHEN REPLACING BCM

The BCM must be initialized when replaced. Refer to (Body Control System) for BCM configuration.
Initialize NVIS by CONSULT-III. For the details of initialization refer to CONSULT-III operation manual NATS-IVIS/NVIS.

>> Work end.

POWER SUPPLY AND GROUND CIRCUIT

BCM (BODY CONTROL MODULE)

BCM (BODY CONTROL MODULE) : Diagnosis Procedure

INFOID:0000000001728461

Refer to BCS-32, "Diagnosis Procedure".

BACK DOOR ASSEMBLY

BACK DOOR ASSEMBLY : Diagnosis Procedure

INFOID:0000000001728462

1. CHECK POWER SUPPLY CIRCUIT

1. Turn ignition switch OFF.
2. Disconnect back door control unit connector.
3. Check voltage between back door control unit harness connector D509 terminal 1 and ground.

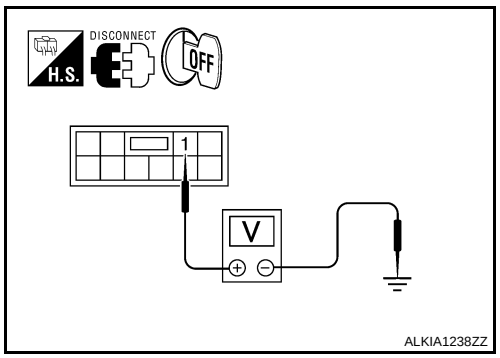

Connector	Terminals		Voltage (V) (Approx.)
D509	(+)	(–)	Battery voltage
	1	Ground	

Is the inspection result normal?

YES >> GO TO 2.
NO >> Repair or replace back door control unit power supply circuit.

2. CHECK GROUND CIRCUIT

Check continuity between back door control unit harness connector D509 terminals 4, 5 and ground.

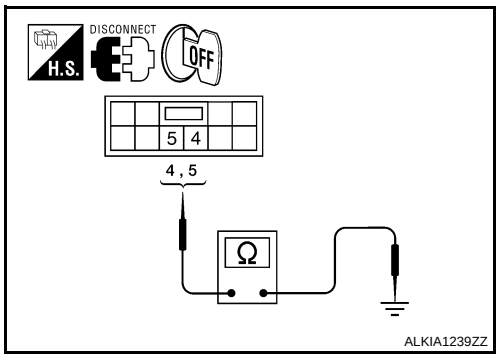

Connector	Terminals		Continuity
D509	4	Ground	Yes
	5		

Is the inspection result normal?

YES >> Power supply and ground circuits are OK.
NO >> Repair or replace the back door control unit ground circuit.

DOOR SWITCH

Description

INFOID:0000000001728463

Detects door open/close condition.

Component Function Check

INFOID:0000000001728464

1.CHECK FUNCTION

With CONSULT-III
Check door switches in data monitor mode with CONSULT-III.

Monitor item	Condition
DOOR SW-DR	CLOSE → OPEN: OFF → ON
DOOR SW-AS	
DOOR SW-RL	
DOOR SW-RR	
BACK DOOR SW	

Is the inspection result normal?

YES >> Door switch is OK.
NO >> Refer to DLK-214, "Diagnosis Procedure".

Diagnosis Procedure

INFOID:0000000001728465

1.CHECK DOOR SWITCHES INPUT SIGNAL

With CONSULT-III
Check door switches ("DOOR SW-DR", "DOOR SW-AS", "DOOR SW-RL", "DOOR SW-RR", "BACK DOOR SW") in DATA MONITOR mode with CONSULT–III.

- When doors are open:

DOOR SW-DR :ON
DOOR SW-AS :ON
DOOR SW-RL :ON
DOOR SW-RR :ON
BACK DOOR SW :ON

- When doors are closed:

DOOR SW-DR :OFF
DOOR SW-AS :OFF
DOOR SW-RL :OFF
DOOR SW-RR :OFF
BACK DOOR SW :OFF

Without CONSULT-III
Check voltage between BCM connector M18 or M19 terminals 12, 13, 43, 47, 48 and ground.

Connec-tor	Item	Terminals (+)	Terminals (–)	Condition	Voltage (V) (Approx.)
M19	Back door switch/latch	43	Ground	Open ↓ Closed	0 ↓ Battery voltage
	Front door switch LH	47			
	Rear door switch LH	48			
M18	Front door switch RH	12			
	Rear door switch RH	13			

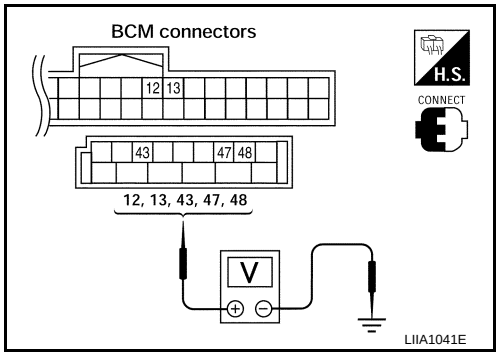

Is the inspection result normal?

YES >> Door switch circuit is OK.
NO >> GO TO 2.

2. CHECK DOOR SWITCH CIRCUIT

1. Turn ignition switch OFF.
2. Disconnect door switch and BCM.
3. Check continuity between BCM connector (A) M18, M19 terminals 12, 13, 43, 47, 48 and door switch connector (B) B8 (Front LH), B108 (Front RH), B18 (Rear LH), B116 (Rear RH) terminal 2 or back door latch connector (C) D502 terminal 7.

2 - 47 :Continuity should exist
2 - 12 :Continuity should exist
2 - 48 :Continuity should exist
2 - 13 :Continuity should exist
7 - 43 :Continuity should exist

4. Check continuity between door switch connector (B) B8 (Front LH), B108 (Front RH), B18 (Rear LH), B116 (Rear RH) terminal 2 or back door latch connector (C) D502 terminal 7 and ground.

2 - Ground :Continuity should not exist
7 - Ground :Continuity should not exist

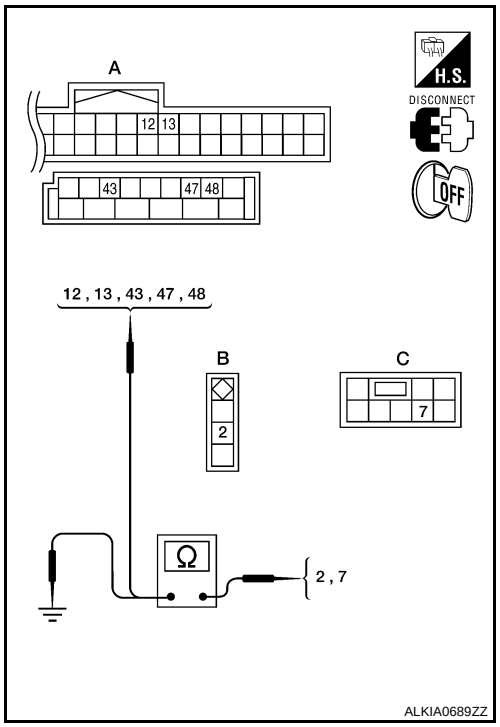

Is the inspection result normal?

YES >> GO TO 3.
NO >> Repair or replace harness.

3. CHECK DOOR SWITCHES

- Disconnect door switch harness.
- Check continuity between door switch connector terminals.

Switch	Terminals	Condition	Continuity
A: Door switch (front and rear)	2 – Ground	Open	Yes
		Closed	No
B: Back door switch	7 – Ground	Open	Yes
		Closed	No

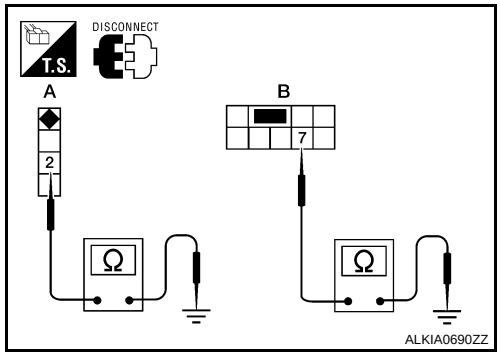

Is the inspection result normal?

YES >> Door switch circuit is OK.
NO >> (Front and rear doors) Replace door switch.
NO >> (Back door) GO TO 4.

4. CHECK BACK DOOR SWITCH CIRCUIT

- Check continuity between door switch connector terminal and ground.

Connector	Terminals	Continuity
Back door switch	8 – Ground	Yes

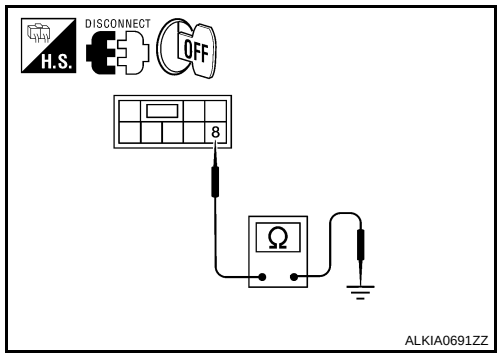

Is the inspection result normal?

YES >> Replace back door switch.
NO >> Repair or replace harness.

DOOR LOCK AND UNLOCK SWITCH

DRIVER SIDE

DRIVER SIDE : Description

INFOID:0000000001728466

Transmits door lock/unlock operation to BCM.

DRIVER SIDE : Component Function Check

INFOID:0000000001728467

1.CHECK FUNCTION

With CONSULT-III

Check CDL LOCK SW, CDL UNLOCK SW in Data Monitor mode with CONSULT-III.

Monitor item	Condition	
CDL LOCK SW	LOCK	: ON
	UNLOCK	: OFF
CDL UNLOCK SW	LOCK	: OFF
	UNLOCK	: ON

Is the inspection result normal?

YES >> Door lock and unlock switch is OK.
NO >> refer to DLK-217, "DRIVER SIDE : Diagnosis Procedure".

DRIVER SIDE : Diagnosis Procedure

INFOID:0000000001728468

1.CHECK DOOR LOCK/UNLOCK SWITCH INPUT SIGNAL

With CONSULT-III

Check main power window and door lock/unlock switch ("CDL LOCK SW", "CDL UNLOCK SW") in DATA MONITOR mode in CONSULT–III.

- When main power window and door lock/unlock switch is turned to LOCK:

CDL LOCK SW :ON

- When main power window and door lock/unlock switch is turned to UNLOCK:

CDL UNLOCK SW :ON

Without CONSULT-III

1. Remove key from ignition key cylinder.
2. Using an oscilloscope, check the signal between BCM connector M18 terminal 22 and ground when the main power window and door lock/unlock switch is turned to LOCK or UNLOCK.
3. Make sure the signals which are shown in the figure below can be detected during 10 seconds just after the door lock/unlock switch is turned to LOCK or UNLOCK.

Connector	Terminal		Voltage (V)
	(+)	(–)	
M18	22	Ground	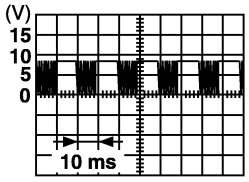 PIIA1297E

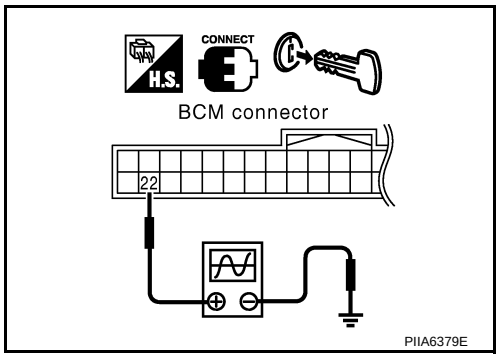

Is the inspection result normal?

YES >> Door lock and unlock switch circuit is OK.

NO >> GO TO 2.

2. CHECK BCM OUTPUT SIGNAL

Check ("POWER WINDOW DOWN") in ACTIVE TEST mode for "MULTI REMOTE ENT" with CONSULT–III.

When "ACTIVE TEST" is performed, the front windows should be lowered.

Is the inspection result normal?

YES >> GO TO 3.
NO >> Replace BCM. Refer to BCS-54, "Removal and Installation".

3. CHECK DOOR LOCK/UNLOCK SWITCH GROUND HARNESS

1. Turn ignition switch OFF.
2. Disconnect main power window and door lock/unlock switch.
3. Check continuity between main power window and door lock/unlock switch connector D8 terminal 17 and ground.

17 - Ground : Continuity should exist.

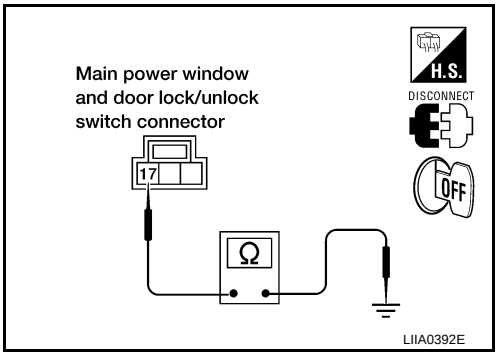

Is the inspection result normal?

YES >> GO TO 4.
NO >> Repair or replace harness.

4. CHECK POWER WINDOW SERIAL LINK CIRCUIT

1. Disconnect BCM.
2. Check continuity between BCM connector M18 terminal 22 and main power window and door lock/unlock switch connector D7 terminal 14.

22 - 14 : Continuity should exist.

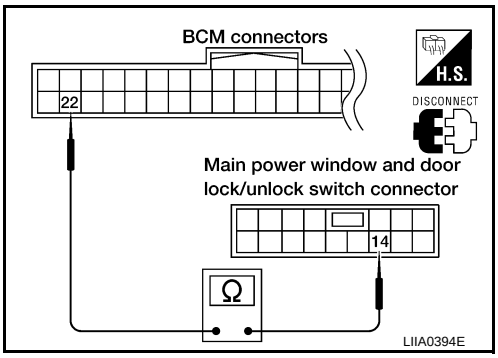

Is the inspection result normal?

YES >> Replace main power window and door lock/unlock switch.
NO >> Repair or replace harness.

PASSENGER SIDE

PASSENGER SIDE : Description

INFOID:0000000001728469

Transmits door lock/unlock operation to BCM.

PASSENGER SIDE : Component Function Check

INFOID:0000000001728470

1. CHECK FUNCTION

With CONSULT-III

Check CDL LOCK SW, CDL UNLOCK SW in Data Monitor mode with CONSULT-III.

Monitor item	Condition	
CDL LOCK SW	LOCK	: ON
	UNLOCK	: OFF
CDL UNLOCK SW	LOCK	: OFF
	UNLOCK	: ON

Is the inspection result normal?

YES >> Door lock and unlock switch is OK.
NO >> Refer to DLK-219, "PASSENGER SIDE : Diagnosis Procedure".

PASSENGER SIDE : Diagnosis Procedure

INFOID:0000000001728471

1. CHECK DOOR LOCK/UNLOCK SWITCH INPUT SIGNAL

With CONSULT-III

Check power window and door lock/unlock switch RH ("CDL LOCK SW", "CDL UNLOCK SW") in DATA MONITOR mode in CONSULT–III.

- When power window and door lock/unlock switch RH is turned to LOCK:

CDL LOCK SW :ON

- When power window and door lock/unlock switch RH is turned to UNLOCK:

CDL UNLOCK SW :ON

Without CONSULT-III

1. Remove key from ignition key cylinder.
2. Using an oscilloscope, check the signal between BCM connector M18 terminal 22 and ground when power window and door lock/unlock switch RH is turned to LOCK or UNLOCK.
3. Make sure the signals which are shown in the figure below can be detected during 10 seconds just after the power window and door lock/unlock switch RH is turned to LOCK or UNLOCK.

Connector	Terminal		Voltage (V)
	(+)	(–)	
M18	22	Ground	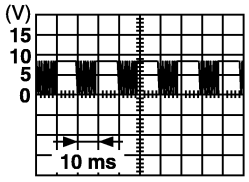

PIIA1297E

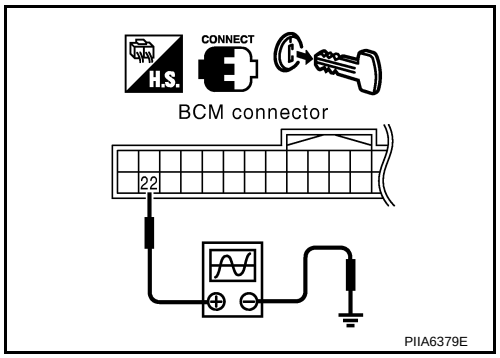

PIIA6379E

Is the inspection normal?

YES >> Power window and door lock/unlock switch RH circuit is OK.
NO >> GO TO 2.

2. CHECK BCM OUTPUT SIGNAL

Check ("POWER WINDOW DOWN") in ACTIVE TEST mode for "MULTI REMOTE ENT" with CONSULT–II.

When "ACTIVE TEST" is performed, the front windows should be lowered.

Is the inspection normal?

YES >> GO TO 3.
NO >> Replace BCM. Refer to BCS-54, "Removal and Installation".

3. CHECK DOOR LOCK/UNLOCK SWITCH GROUND HARNESS

1. Turn ignition switch OFF.
2. Disconnect power window and door lock/unlock switch RH.

3. Check continuity between power window and door lock/unlock switch RH connector D105 terminal 11 and ground

11 - Ground : Continuity should exist.

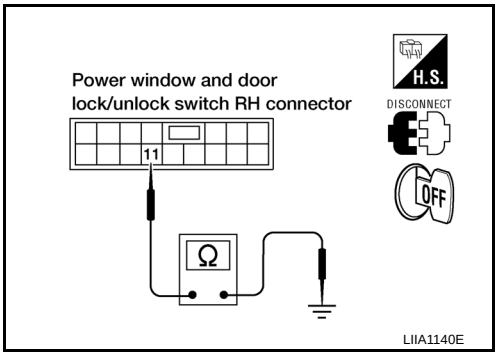

Is the inspection normal?

YES >> GO TO 4.
NO >> Repair or replace harness.

4. CHECK POWER WINDOW SERIAL LINK CIRCUIT

1. Disconnect BCM.
2. Check continuity between BCM connector M18 terminal 22 and power window and door lock/unlock switch RH connector D105 terminal 16.

22 - 16 : Continuity should exist.

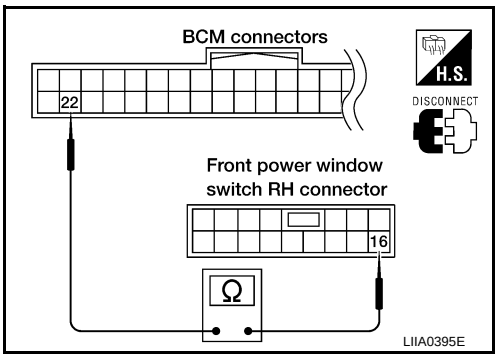

Is the inspection normal?

YES >> Replace power window and door lock/unlock switch RH.
NO >> Repair or replace harness.

KEY CYLINDER SWITCH

Description

INFOID:0000000001728472

The main power window and door lock/unlock switch detects condition of the door key cylinder switch and transmits to BCM as the LOCK or UNLOCK signal.

Component Function Check

INFOID:0000000001728473

1. CHECK DOOR KEY CYLINDER SWITCH INPUT SIGNAL

Check "KEY CYL LK-SW" AND "KEY CYL UN-SW" in DATA MONITOR mode for “POWER DOOR LOCK SYSTEM” with CONSULT-III.

Monitor item	Condition	
KEY CYL LK-SW	Lock	: ON
	Neutral / Unlock	: OFF
KEY CYL UN-SW	Unlock	: ON
	Neutral / Lock	: OFF

Is the inspection result normal?

YES >> Key cylinder switch is OK.
NO >> Refer to DLK-221, "Diagnosis Procedure".

Diagnosis Procedure

INFOID:0000000001728474

1. CHECK DOOR KEY CYLINDER SWITCH LH

With CONSULT-III
Check front door lock assembly LH (key cylinder switch) ("KEY CYL LK-SW") and ("KEY CYL UN-SW) in DATA MONITOR mode with CONSULT–III.

- When key inserted in left front key cylinder is turned to LOCK:

KEY CYL LK-SW : ON

- When key inserted in left front key cylinder is turned to UNLOCK:

KEY CYL UN-SW : ON

Without CONSULT-III
Check voltage between main power window and door lock/unlock switch connector D7 terminals 4, 6 and ground.

Connector	Terminals (+)	Terminals (–)	Condition of left front key cylinder	Voltage (V) (Approx.)
D7	4	Ground	Neutral/Unlock	5
			Lock	0
	6		Neutral/Lock	5
			Unlock	0

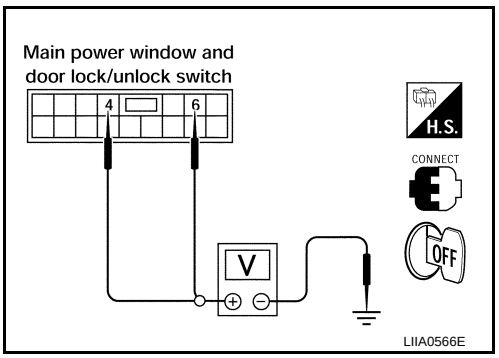

Is the inspection result normal?

YES >> Key cylinder switch signal is OK.
NO >> GO TO 2.

2. CHECK DOOR KEY CYLINDER SWITCH LH GROUND HARNESS

1. Turn ignition switch OFF.
2. Disconnect front door lock assembly LH (key cylinder switch).

3. Check continuity between front door lock assembly LH (key cylinder switch) connector (A) D14 terminal 4 and body ground.

Connector	Terminals	Continuity
D14	4 – Ground	Yes

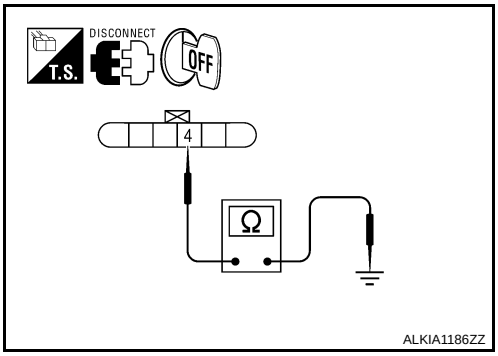

Is the inspection result normal?

YES >> GO TO 3.
NO >> Repair or replace harness.

3. CHECK DOOR KEY CYLINDER SWITCH LH

Check continuity between front door lock assembly LH (key cylinder switch) terminals.

Terminals	Condition	Continuity
3 – 4	Key is turned to LOCK or neutral.	No
	Key is turned to UNLOCK.	Yes
4 – 5	Key is turned to UNLOCK or neutral.	No
	Key is turned to LOCK.	Yes

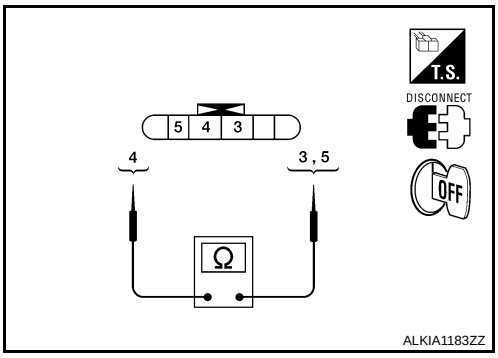

Is the inspection result normal?

YES >> GO TO 4.
NO >> Replace front door lock assembly LH (key cylinder switch). Refer to DLK-313, "Removal and Installation".

4. CHECK DOOR KEY CYLINDER HARNESS

Check continuity between main power window and door lock/unlock switch connector (A) D7 terminals 4, 6 and front door lock assembly LH (key cylinder switch) connector (B) D14 terminals 3, 5 and body ground.

Connector	Terminals	Connector	Terminals	Continuity
A: Main power window and door lock/unlock switch	4	B: Front door lock assembly LH (key cylinder switch)	5	Yes
	6		3	Yes
	4, 6	Ground		No

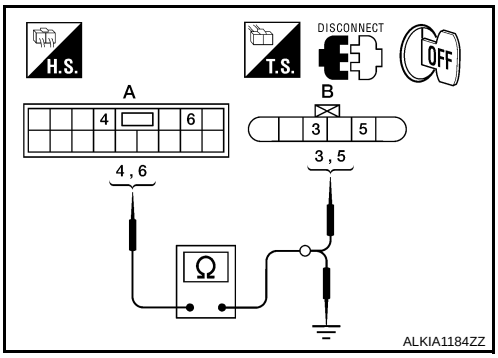

Is the inspection result normal?

YES >> Replace main power window and door lock/unlock switch.
NO >> Repair or replace harness.

FRONT DOOR LOCK ACTUATOR LH (DOOR UNLOCK SENSOR)

Description - RF Door

INFOID:0000000001728475

Detects door lock condition of passenger door.

Diagnosis Procedure - RF Door

INFOID:0000000001728477

1. CHECK LOCK SENSOR POWER SUPPLY

Check voltage between back door control unit connector terminal 5 and ground.

Connector	Terminals (+)	Terminals (-)	Condition	Voltage (V) (Approx.)
D509	5	Ground	Passenger side door lock is locked	Battery voltage
			Passenger side door lock is unlocked	0

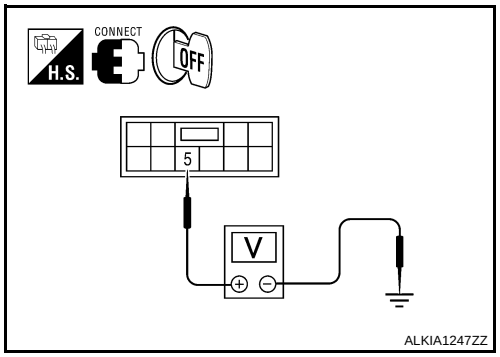

Is the inspection result normal?

YES >> Front door lock assembly RH (door lock sensor) is OK.
NO >> GO TO 2.

2. CHECK LOCK SENSOR CIRCUIT

1. Turn ignition switch OFF.
2. Disconnect back door control unit and front door lock assembly RH (door lock sensor) connector.
3. Check continuity between back door control unit harness connector (A) D509 terminal 5 and front door lock assembly RH (door lock sensor) harness connector (B) D103 terminal 1.

5 – 1 : Continuity should exist.

4. Check continuity between back door control unit harness connector (A) D509 terminal 5 and ground.

5 – Ground : Continuity should not exist.

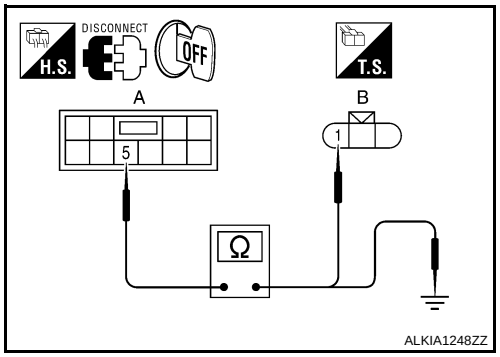

Is the inspection result normal?

YES >> GO TO 3.
NO >> Repair or replace harness between back door control unit and front door lock assembly RH (door lock sensor).

3. CHECK LOCK SENSOR GROUND CIRCUIT

Check continuity between front door lock assembly RH (door lock sensor) harness connector D103 terminal 3 and ground.

3 – Ground : Continuity should exist.

Is the inspection result normal?

YES >> GO TO 4.
NO >> Repair or replace harness.

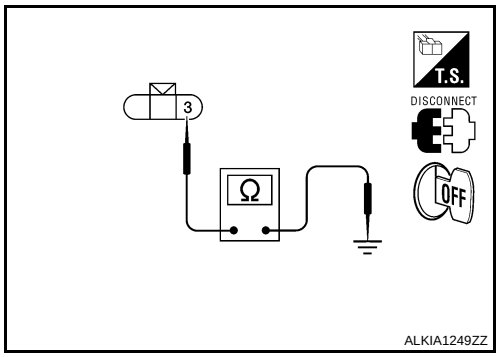

4. CHECK BACK DOOR CONTROL UNIT OUTPUT SIGNAL

1. Connect back door control unit harness connector.
2. Check voltage between back door control unit harness connector D509 terminal 5 and ground.

5 – Ground : Battery voltage

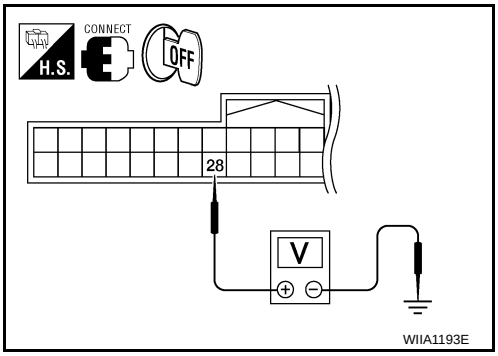

Is the inspection result normal?

YES >> Refer to DLK-224, "Component Inspection - RF Door".
NO >> Replace back door control unit. Refer to DLK-317, "Component Structure".

Component Inspection - RF Door

INFOID:0000000001728478

1. CHECK DOOR LOCK SENSOR

Check door lock sensor.

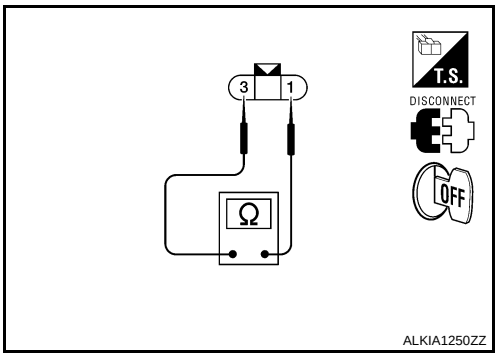

Terminal		Front door lock assembly RH condition	Continuity
Front door lock assembly RH			
1	3	Unlocked	Yes
		Locked	No

Is the inspection result normal?

YES >> INSPECTION END.
NO >> Replace front lock assembly RH (door lock sensor). Refer to DLK-313, "Removal and Installation".

DOOR LOCK ACTUATOR
DRIVER SIDE

DRIVER SIDE : Description

INFOID:0000000001728487

Locks/unlocks the door with the signal from BCM.

DRIVER SIDE : Component Function Check

INFOID:0000000001728488

1. CHECK FUNCTION

1. Use CONSULT-III to perform Active Test "DOOR LOCK".
2. Touch “ALL LOCK” or “ALL UNLOCK” to check that it works normally.

Is the inspection result normal?

YES >> Door lock actuator is OK.
NO >> Refer to DLK-225, "DRIVER SIDE : Diagnosis Procedure".

DRIVER SIDE : Diagnosis Procedure

INFOID:0000000001728489

1. CHECK DOOR LOCK ACTUATOR SIGNAL

1. Turn ignition switch OFF.
2. Check voltage between BCM connector M20 terminals 59, 65 and ground.

Connector	Terminals (+)	Terminals (-)	Condition	Voltage (V) (Approx.)
M20	59	Ground	Driver door lock/unlock switch is turned to UN-LOCK	0 → Battery voltage
	65		Driver door lock/unlock switch is turned to LOCK	0 → Battery voltage

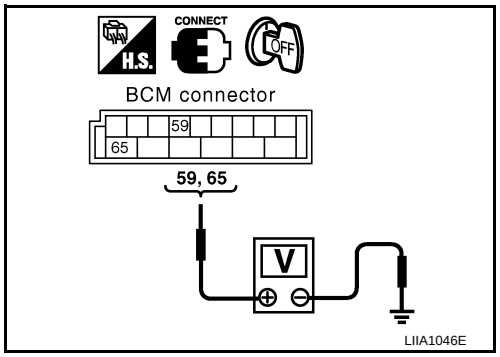

Is the inspection result normal?

YES >> GO TO 2.
NO >> GO TO 3.

2. CHECK DOOR LOCK ACTUATOR HARNESS

1. Disconnect BCM and front door lock assembly LH (actuator).
2. Check continuity between BCM connector (A) M20 terminals 59, 65 and front door lock assembly LH (actuator) connector (B) D14 terminals 1, 2.

Connector	Terminals	Connector	Terminals	Continuity
M20	59	D14	2	Yes
	65		1	

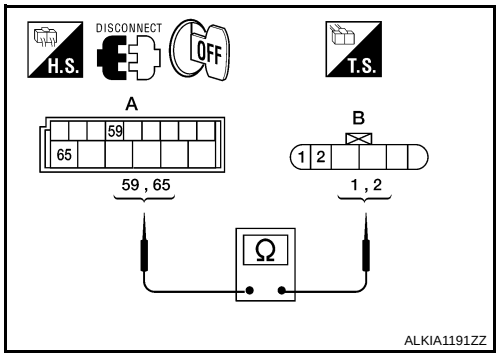

Is the inspection result normal?

YES >> Replace front door lock assembly LH (actuator).
NO >> Repair or replace harness.

3. CHECK DOOR LOCK ACTUATOR HARNESS

1. Disconnect BCM and front door lock assembly LH (actuator).

2. Check continuity between BCM connector M20 terminals 59, 65 and ground.

Connector	Terminals		Continuity
M20	59	Ground	No
	65		

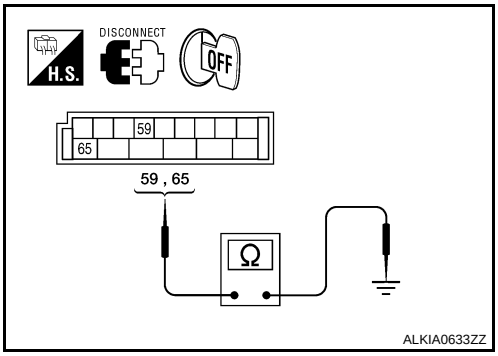

Is the inspection result normal?

YES >> Replace BCM. Refer to BCS-54, "Removal and Installation".
NO >> Repair or replace harness.

PASSENGER SIDE

PASSENGER SIDE : Description

INFOID:0000000001728490

Locks/unlocks the door with the signal from BCM.

PASSENGER SIDE : Component Function Check

INFOID:0000000001728491

1. CHECK FUNCTION

1. Use CONSULT-III to perform Active Test DOOR LOCK.
2. Touch “ALL LOCK” or “ALL UNLOCK” to check that it works normally.

Is the inspection result normal?

YES >> Door lock actuator is OK.
NO >> Refer to DLK-226, "PASSENGER SIDE : Diagnosis Procedure".

PASSENGER SIDE : Diagnosis Procedure

INFOID:0000000001728492

1. CHECK FRONT DOOR LOCK ACTUATOR RH SIGNAL

1. Turn ignition switch OFF.
2. Check voltage between BCM connector M20 terminals 65, 66 and ground.

Connector	Terminals		Condition	Voltage (V) (Approx.)
	(+)	(-)		
M20	65	Ground	Door lock/unlock switch is turned to LOCK	0 → Battery voltage for 300 ms
	66		Door lock/unlock switch is turned to UNLOCK	

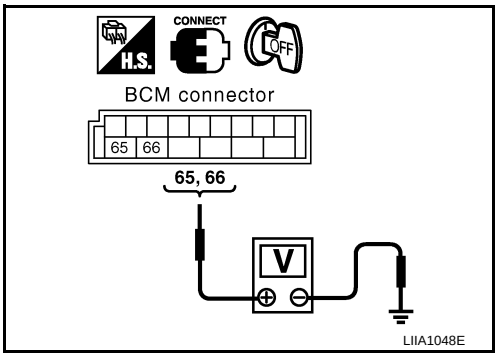

Is the inspection result normal?

YES >> GO TO 2.
NO >> GO TO 3.

2. CHECK DOOR LOCK ACTUATOR HARNESS

1. Disconnect BCM and front door lock actuator RH.

2. Check continuity between BCM connector (A) M20 terminals 65, 66 and front door lock actuator RH (B) D114 terminals 1, 2.

Terminal		Continuity
65	2	Yes
66	1	

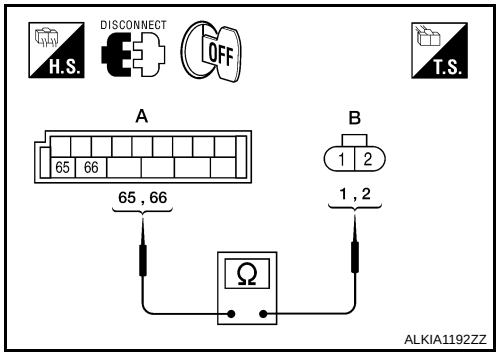

Is the inspection result normal?

YES >> Replace front door lock actuator RH. Refer to DLK-313, "Removal and Installation".
NO >> Repair or replace harness.

3. CHECK DOOR LOCK ACTUATOR HARNESS

1. Disconnect BCM and front door lock actuator RH.
2. Check continuity between BCM connector M19 terminals 65, 66 and ground.

Terminals		Continuity
65	Ground	No
66		

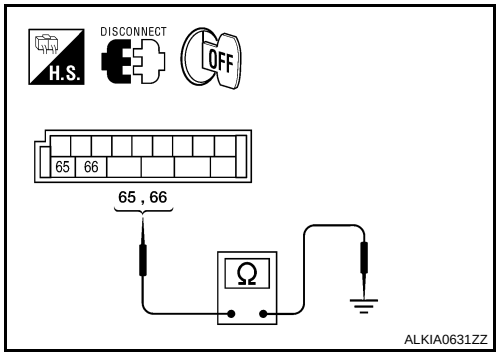

Is the inspection result normal?

YES >> Replace BCM. Refer to BCS-54, "Removal and Installation".
NO >> Repair or replace harness.

REAR LH

REAR LH : Description

INFOID:0000000001728493

Locks/unlocks the door with the signal from BCM.

REAR LH : Component Function Check

INFOID:0000000001728494

1. CHECK FUNCTION

1. Use CONSULT-III to perform Active Test "DOOR LOCK".
2. Touch “ALL LOCK” or “ALL UNLOCK” to check that it works normally.

Is the inspection result normal?

YES >> Door lock actuator is OK.
NO >> Refer to DLK-227, "REAR LH : Diagnosis Procedure".

REAR LH : Diagnosis Procedure

INFOID:0000000001728495

1. CHECK DOOR LOCK ACTUATOR SIGNAL

1. Turn ignition switch OFF.

2. Check voltage between BCM connector M20 terminals 65, 66 and ground.

Connector	Terminals (+)	Terminals (-)	Condition	Voltage (V) (Approx.)
M20	65	Ground	Door lock/unlock switch is turned to LOCK	0 → Battery voltage for 300 ms
	66		Door lock/unlock switch is turned to UNLOCK	

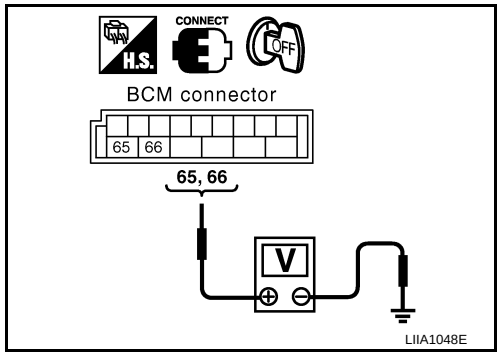

Is the inspection result normal?

YES >> GO TO 2.
NO >> GO TO 3.

2. CHECK DOOR LOCK ACTUATOR HARNESS

NOTE:
The passenger select unlock relay must remain connected during this test.

1. Disconnect BCM and rear door lock actuator LH.
2. Check continuity between BCM connector (A) M20 terminals 65, 66 and rear door lock actuator LH connector (B) D205 terminals 1, 2.

Terminals		Continuity
65	2	Yes
66	1	

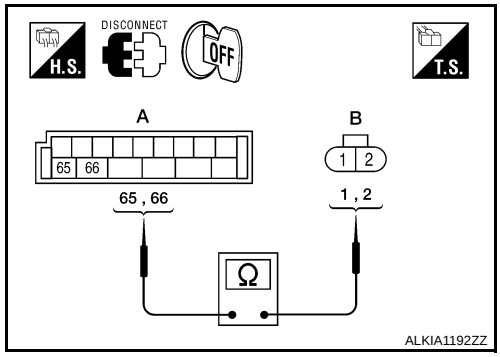

Is the inspection result normal?

YES >> Replace rear door lock actuator LH.
NO >> Repair or replace harness or passenger select unlock relay.

3. CHECK DOOR LOCK ACTUATOR HARNESS

1. Disconnect BCM and each door lock actuator.
2. Check continuity between BCM connector M20 terminals 65, 66 and ground.

Terminals		Continuity
65	Ground	No
66		No

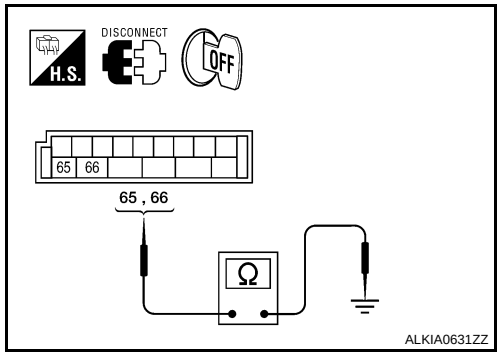

Is the inspection result normal?

YES >> Replace BCM. Refer to BCS-54, "Removal and Installation".
NO >> Repair or replace harness or passenger select unlock relay.

REAR RH

REAR RH : Description

INFOID:0000000001728496

Locks/unlocks the door with the signal from BCM.

REAR RH : Component Function Check

INFOID:0000000001728497

1. CHECK FUNCTION

1. Use CONSULT-III to perform Active Test "DOOR LOCK".
2. Touch “ALL LOCK” or “ALL UNLOCK” to check that it works normally.

Is the inspection result normal?

YES >> Door lock actuator is OK.
NO >> Refer to DLK-229, "REAR RH : Diagnosis Procedure".

REAR RH : Diagnosis Procedure

INFOID:0000000001728498

1. CHECK DOOR LOCK ACTUATOR SIGNAL

1. Turn ignition switch OFF.
2. Check voltage between BCM connector M20 terminals 65, 66 and ground.

Connector	Terminals (+)	Terminals (-)	Condition	Voltage (V) (Approx.)
M20	65	Ground	Door lock/unlock switch is turned to LOCK	0 → Battery voltage for 300 ms
	66		Door lock/unlock switch is turned to UNLOCK	

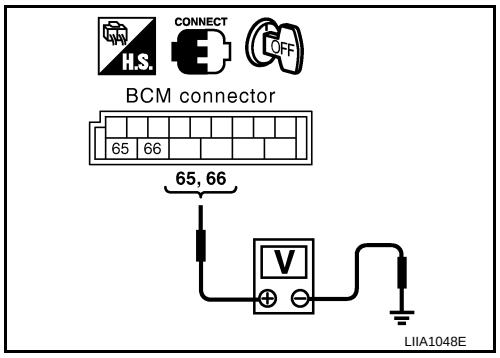

Is the inspection result normal?

YES >> GO TO 2.
NO >> GO TO 3.

2. CHECK DOOR LOCK ACTUATOR HARNESS

NOTE:
The passenger select unlock relay must remain connected during this test.

1. Disconnect BCM and rear door lock actuator RH.
2. Check continuity between BCM connector (A) M20 terminals 65, 66 and rear door lock actuator RH connector (B) D305 terminals 1, 2.

Terminals		Continuity
65	2	Yes
66	1	

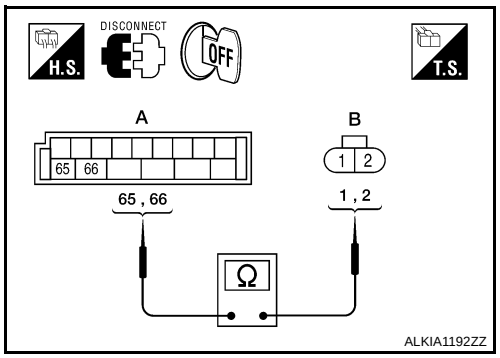

Is the inspection result normal?

YES >> Replace rear door lock actuator RH.
NO >> Repair or replace harness or passenger select unlock relay.

3. CHECK DOOR LOCK ACTUATOR HARNESS

1. Disconnect BCM and rear door lock actuator RH.

2. Check continuity between BCM connector (A) M20 terminals 65, 66 and ground.

Terminals		Continuity
65	Ground	No
66		

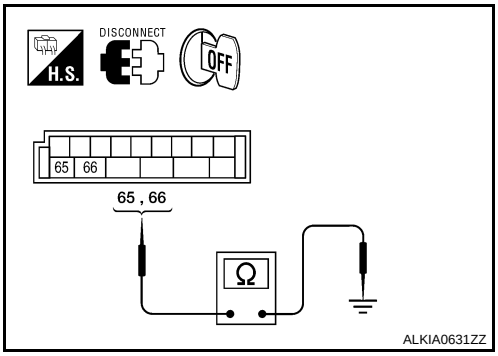

Is the inspection result normal?

YES >> Replace BCM. Refer to BCM REPLACEMENT.
NO >> Repair or replace harness or passenger select unlock relay.

BACK DOOR

BACK DOOR : Description

INFOID:0000000001728499

Locks/unlocks the door with the signal from BCM.

BACK DOOR : Component Function Check

INFOID:0000000001728500

1. CHECK FUNCTION

1. Use CONSULT-III to perform Active Test DOOR LOCK.
2. Touch “ALL LOCK” or “ALL UNLOCK” to check that it works normally.

Is the inspection result normal?

YES >> Door lock actuator is OK.
NO >> Refer to DLK-230, "BACK DOOR : Diagnosis Procedure".

BACK DOOR : Diagnosis Procedure

INFOID:0000000001728501

1. CHECK DOOR LOCK ACTUATOR SIGNAL

1. Turn ignition switch OFF.
2. Check voltage between BCM connector M20 terminals 65, 66 and ground.

Connector	Terminals		Condition	Voltage (V) (Approx.)
	(+)	(-)		
M20	65	Ground	Door lock/unlock switch is turned to LOCK	0 → Battery voltage for 300 ms
	66		Door lock/unlock switch is turned to UNLOCK	

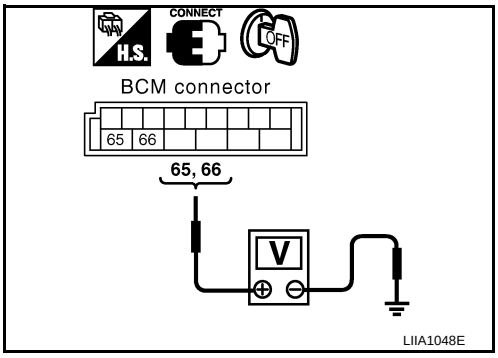

Is the inspection result normal?

YES >> GO TO 2.
NO >> GO TO 3.

2. CHECK DOOR LOCK ACTUATOR HARNESS

1. Disconnect BCM and back door lock actuator.

2. Check continuity between BCM connector (A) M20 terminals 65, 66 and back door lock actuator connector (B) D508 terminals 2, 4.

Terminals		Continuity
65	4	Yes
66	2	

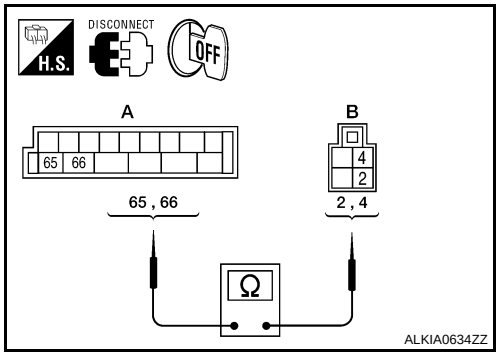

Is the inspection result normal?

YES >> Replace door lock actuator.
NO >> Repair or replace harness.

3. CHECK DOOR LOCK ACTUATOR HARNESS

1. Disconnect BCM and back door lock actuator.
2. Check continuity between BCM connector M20 terminals 65, 66 and ground.

Terminals		Continuity
65	Ground	No
66		

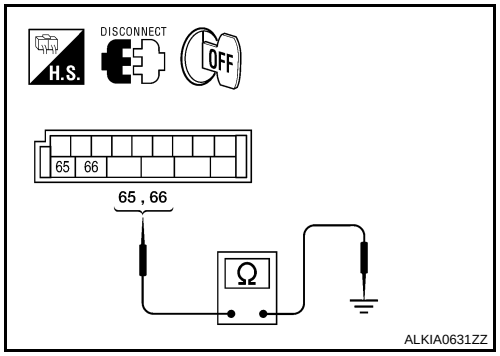

Is the inspection result normal?

YES >> Replace BCM. Refer to BCS-54, "Removal and Installation".
NO >> Repair or replace harness.

REMOTE KEYLESS ENTRY RECEIVER

Description

INFOID:0000000001728522

Receives keyfob operation and transmits to BCM.

Component Function Check

INFOID:0000000001728523

1.CHECK FUNCTION

With CONSULT-III

Check remote keyless entry receiver "RKE OPE COUN1" in Data Monitor mode with CONSULT-III.

Monitor item	Condition
RKE OPE COUN1	Checks whether value changes when operating key fob.

Is the inspection result normal?

YES >> Remote keyless entry receiver is OK.
NO >> Refer to DLK-232, "Diagnosis Procedure".

Diagnosis Procedure

INFOID:0000000001728524

1.CHECK REMOTE KEYLESS ENTRY RECEIVER OUTPUT SIGNAL

1. Turn ignition switch OFF.
2. Check remote keyless entry receiver signal with an oscilloscope.

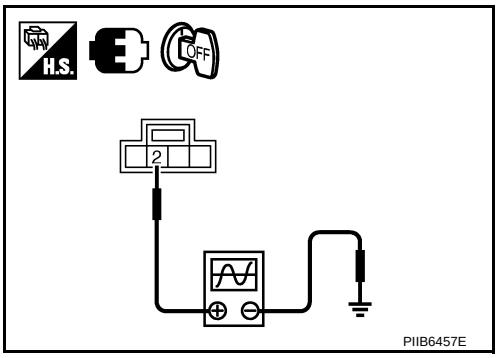

Terminals (+) Remote keyless entry receiver connector	Terminals (+) Terminal	Terminals (–)	Keyfob condition	Signal (Reference value)
M120	2	Ground	No function	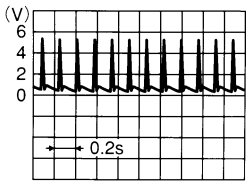 OCC3879D
			Any button is pressed	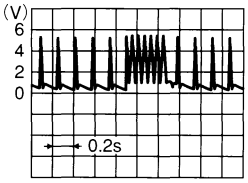 OCC3880D

Is the inspection result normal?

YES >> GO TO 2
NO >> GO TO 4

2.REMOTE KEYLESS ENTRY RECEIVER 5-VOLT CIRCUIT INSPECTION

Check voltage between remote keyless entry receiver connector M120 terminal 4 and ground.

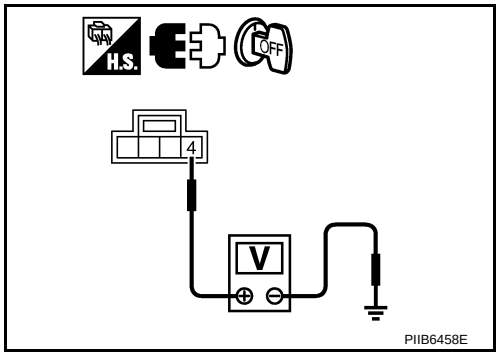

4 - Ground : Approx. 5 volt.

Is the inspection result normal?

YES >> GO TO 3
NO >> GO TO 4

3. REMOTE KEYLESS ENTRY RECEIVER GROUND CIRCUIT INSPECTION

Check continuity between remote keyless entry receiver connector M120 terminal 1 and ground.

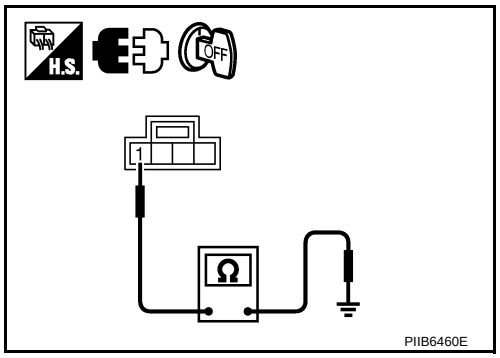

1 - Ground : Continuity should exist.

Is the inspection result normal?

YES >> Replace remote keyless entry receiver.
NO >> GO TO 4

4. HARNESS INSPECTION BETWEEN BCM AND RKE RECEIVER

1. Disconnect remote keyless entry receiver and BCM connectors.
2. Check continuity between BCM connector M18 terminals 18, 19, 20 and remote keyless entry receiver connector M120 terminals 1, 2, 4.

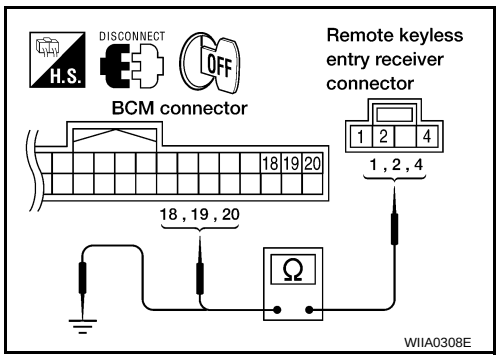

1 - 18 : Continuity should exist.
2 - 20 : Continuity should exist.
4 - 19 : Continuity should exist.

3. Check continuity between remote keyless entry receiver connector M120 terminals 1, 2, 4 and ground.

1 - Ground : Continuity should not exist.
2 - Ground : Continuity should not exist.
4 - Ground : Continuity should not exist.

Is the inspection result normal?

YES >> Replace remote keyless entry receiver.
NO >> Repair or replace the harness between the remote keyless entry receiver and BCM.

KEYFOB BATTERY AND FUNCTION

Description

INFOID:0000000001728525

The following functions are available when having and carrying electronic ID.
- Door lock/unlock
- Panic alarm

Remote control entry function and panic alarm function are available when operating the remote buttons.

Component Function Check

INFOID:0000000001728526

1.CHECK FUNCTION

With CONSULT-III

Check remote keyless entry receiver "RKE OPE COUN1" in DATA MONITOR mode with CONSULT-III.

Monitor item	Condition
RKE OPE COUN1	Check that the numerical value is changing while operating the key fob.

Is the inspection result normal?

YES >> Intelligent Key is OK.
NO >> Refer to DLK-234, "Diagnosis Procedure".

Diagnosis Procedure

INFOID:0000000001728527

1.CHECK KEYFOB BATTERY

Check by connecting a resistance (approximately 300Ω) so that the current value becomes about 10 mA.

Standard : Approx. 2.5 - 3.0V

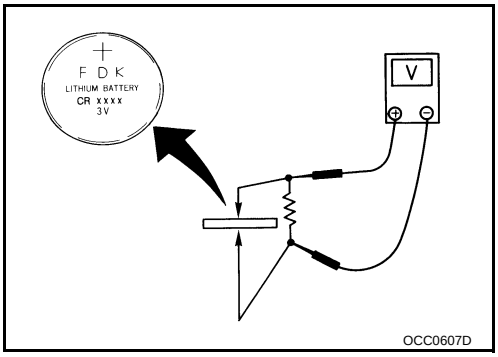

Is the measurement value within specification?

YES >> GO TO 2.
NO >> Replace key fob battery.

2.CHECK KEYFOB FUNCTION

Check keyfob function using Remote Keyless Entry Tester J-43241.

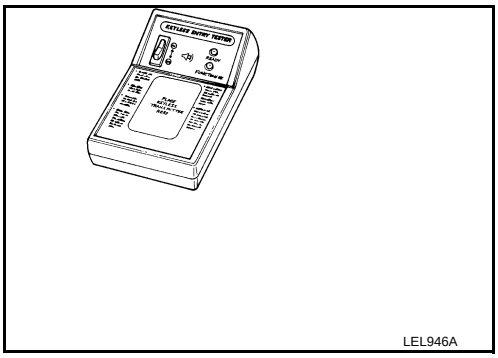

Does the test pass?

YES >> Key fob is OK.
NO >> Replace key fob. Refer to CONSULT-III Operation Manual.

Component Inspection

INFOID:0000000001728589

1.REPLACING KEYFOB BATTERY

NOTE:
- Be careful not to touch the circuit board or battery terminal.
- The keyfob is water-resistant. However, if it does get wet, immediately wipe it dry.

1. Open the lid using a coin.
2. Remove the battery.
3. Install the new battery, positive side down.
4. Close the lid securely. Push the keyfob buttons two or three times to check operation.

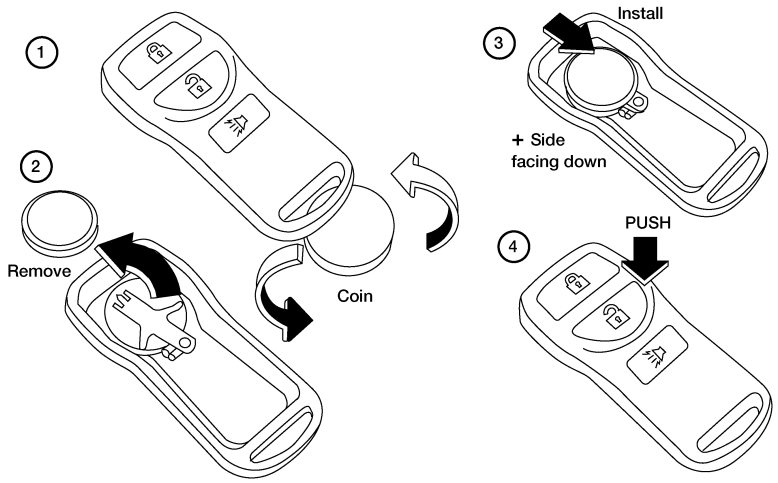

LIIA1514E

Check key fob operation after replacing the battery.

Is the inspection result normal?

YES >> Keyfob is OK.
NO >> Check remote keyless entry receiver. Refer to DLK-232, "Diagnosis Procedure".

Special Repair Requirement

INFOID:0000000001728529

Refer to CONSULT-III Operation Manual.

HORN FUNCTION

Description

INFOID:0000000001728530

Perform answer-back for each operation with horn.

Component Function Check

INFOID:0000000001728531

1.CHECK FUNCTION

1. Select "HORN" in “ACTIVE TEST” mode with CONSULT-III.
2. Check the horn (high/low) operation.

Test item		Description	
HORN	ON	Horn relay	ON (for 20 ms)

Is the operation normal?

YES >> INSPECTION END.
NO >> Go to DLK-236, "Diagnosis Procedure".

Diagnosis Procedure

INFOID:0000000001728532

1.CHECK HORN FUNCTION

Check horn function with horn switch

Do the horns sound?

YES >> GO TO 2.
NO >> Go to HRN-3, "Wiring Diagram".

2.CHECK HORN RELAY POWER SUPPLY

1. Turn ignition switch ON.
2. Perform “ACTIVE TEST”, "HORN" with CONSULT-III.
3. Using an oscilloscope or analog voltmeter, check voltage between IPDM E/R connector E122 terminal 45 and ground.

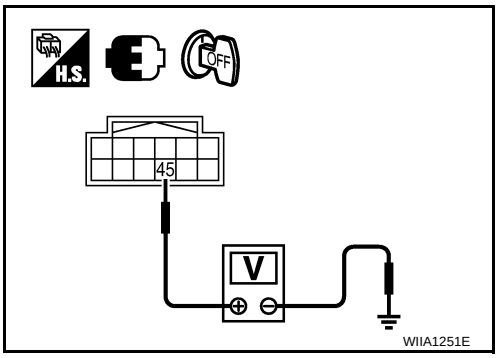

IPDM E/R		Ground	Test item		Voltage (V) (Approx.)
Connector	Terminal				
E122	45	Ground	HORN	OFF → ON → OFF	Battery voltage → 0 → Battery voltage
				Other than above	Battery voltage

Is the inspection result normal?

YES >> GO TO 4.
NO >> GO TO 3.

3.CHECK HORN RELAY CIRCUIT

1. Turn ignition switch OFF.
2. Disconnect IPDM E/R and horn relay connector.

3. Check continuity between IPDM E/R harness connector and horn relay harness connector.

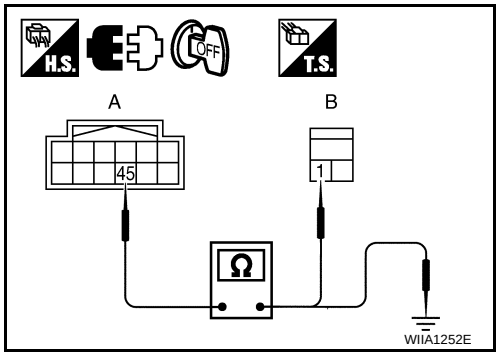

IPDM E/R		Horn relay		Continuity
Connector	Terminal	Connector	Terminal	
A: E122	45	B: H-1	1	Yes

4. Check continuity between IPDM E/R harness connector and ground.

IPDM E/R		Ground	Continuity
Connector	Terminal		
E122	45	Ground	No

Is the inspection result normal?

YES >> GO TO 4.
NO >> Repair or replace harness.

4. CHECK INTERMITTENT INCIDENT

Refer to GI-51, "Intermittent Incident".

Is the inspection result normal?

YES >> Replace IPDM E/R. Refer to PCS-30, "Removal and Installation of IPDM E/R".
NO >> Repair or replace the malfunctioning part.

COMBINATION METER DISPLAY FUNCTION

Description

INFOID:0000000001728533

Displays each operation method guide and warning for system malfunction.

Component Function Check

INFOID:0000000001728534

1.CHECK FUNCTION

1. Turn ignition switch ON.
2. Using Consult-III, activate "P-SHIFT" and "KEY" warning lamp indicators in "ACTIVATE TEST" mode.

Do the warning lamps illuminate?

YES >> Combination meter warning lamp indicators are OK.
NO >> Refer to DLK-238, "Diagnosis Procedure".

Diagnosis Procedure

INFOID:0000000001728535

1.CHECK COMBINATION METER

Refer to DLK-284, "DTC Index".

Is the inspection result normal?

YES >> GO TO 2.
NO >> Check combination meter. Refer to MWI-23, "Diagnosis Description".

2.CHECK INTERMITTENT INCIDENT

Refer to GI-51, "Intermittent Incident".

>> INSPECTION END.

WARNING CHIME FUNCTION

Description

INFOID:0000000001728536

Performs operation method guide and warning with buzzer.

Component Function Check

INFOID:0000000001728537

1. CHECK FUNCTION

With CONSULT-III

1. Check the operation with "INSIDE BUZZER" in the Active Test.
2. Touch “TAKE OUT”, “KNOB”or “KEY” on screen.

Is the inspection result normal?

Yes >> Warning buzzer into combination meter is OK.
No >> Refer to DLK-239, "Diagnosis Procedure".

Diagnosis Procedure

INFOID:0000000001728538

1. CHECK METER BUZZER CIRCUIT

The inoperative warning chime is contained inside the combination meter. Replace combination meter.

>> Inspection end.

HAZARD FUNCTION

Description

INFOID:0000000001728539

Perform answer-back for each operation with number of blinks.

Component Function Check

INFOID:0000000001728540

1.CHECK FUNCTION

Check hazard warning lamp "FLASHER" in ACTIVE TEST.

Is the inspection result normal?

YES >> Hazard warning lamp circuit is OK.
NO >> Refer to DLK-240, "Diagnosis Procedure".

Diagnosis Procedure

INFOID:0000000001728541

1.CHECK HAZARD SWITCH CIRCUIT

Operate the hazard lights by turning ON the hazard warning switch.

Do the lights operate normally?

YES >> Replace the BCM. Refer to BCS for replacement and configuration procedure.
NO >> Repair or replace hazard warning switch circuit. Refer to EXL-66, "Wiring Diagram".

KEY SWITCH (BCM INPUT)

Diagnosis Procedure

INFOID:0000000001728561

1. CHECK KEY SWITCH INPUT SIGNAL

With CONSULT-II

Check key switch "KEY ON SW" in DATA MONITOR mode with CONSULT–III. Refer to DLK-207, "DOOR LOCK : CONSULT-III Function (BCM - DOOR LOCK)".

- When key is inserted to ignition key cylinder:

KEY ON SW : ON

- When key is removed from ignition key cylinder:

KEY ON SW : OFF

Without CONSULT-II

Check voltage between BCM connector M18 terminal 37 and ground.

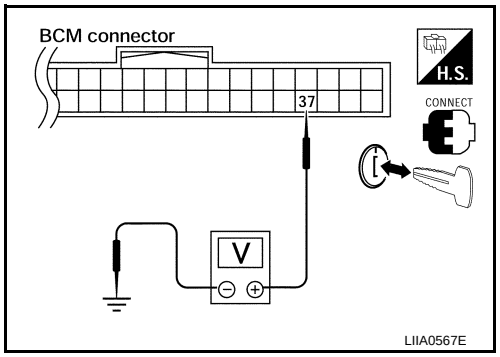

Connector	Terminal (+)	Terminal (–)	Condition	Voltage (V)
M18	37	Ground	Key is inserted.	Battery voltage
			Key is removed.	0

OK or NG

OK >> Key switch (insert) circuit is OK.
NG >> GO TO 2.

2. CHECK KEY SWITCH (INSERT)

1. Turn ignition switch OFF.
2. Disconnect key switch connector.
3. Check continuity between key switch terminals.

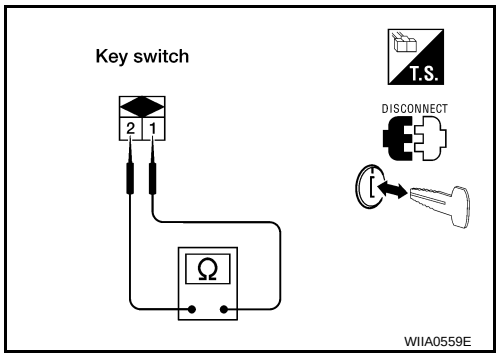

Terminals	Condition	Continuity
1 – 2	Key is inserted.	Yes
	Key is removed.	No

OK or NG

OK >> Repair or replace harness or fuse.
NG >> Replace key switch.

HEADLAMP FUNCTION

Diagnosis Procedure

INFOID:0000000001728545

1.CHECK HEADLAMP OPERATION

Do headlamps operate with headlamp switch?

YES or NO

YES >> Headlamp circuit is OK.
NO >> Check headlamp circuit. Refer to EXL-4, "Work Flow".

MAP LAMP AND IGNITION KEYHOLE ILLUMINATION FUNCTION

Diagnosis Procedure

INFOID:0000000001728546

1. CHECK MAP LAMP OPERATION

When room lamp switch is in "DOOR" position, open the driver or passenger door.
Map lamp and ignition keyhole illumination should illuminate.

Is the inspection result normal?

YES >> Map lamp circuit is OK.
NO >> Check map lamp circuit. Refer to INL-3, "Work Flow".

KEYFOB ID SET UP WITH CONSULT-III

ID Code Entry Procedure

INFOID:0000000001728547

KEYFOB ID SET UP WITH CONSULT-III

NOTE:

- **If a keyfob is lost, the ID code of the lost keyfob must be erased to prevent unauthorized use. A specific ID code can be erased with CONSULT-III. However, when the ID code of a lost keyfob is not known, all controller ID codes should be erased. After all ID codes are erased, the ID codes of all remaining and/or new keyfobs must be re-registered.**
- **When registering an additional keyfob, the existing ID codes in memory may or may not be erased. If five ID codes are stored in memory when an additional code is registered, only the oldest code is erased. If less than five codes are stored in memory when an additional code is registered, the new ID code is added and no ID codes are erased.**
- **Entry of a maximum of five ID codes is allowed. When more than five codes are entered, the oldest ID code will be erased.**
- **Even if the same ID code that is already in memory is input, the same ID code can be entered. The code is counted as an additional code.**

1. Turn ignition switch ON.
2. Select “BCM”.
3. Select “MULTI REMOTE ENT”.
4. Select “WORK SUPPORT”.
5. You can register, erase or confirm a keyfob ID code. To register a new code, select the following option and follow CONSULT-III instructions:
   - “REMO CONT ID REGIST”
     Use this mode to register a keyfob ID code.
     NOTE:
     Register the ID code when keyfob or BCM is replaced, or when additional keyfob is required.
   - “REMO CONT ID ERASUR”
     Use this mode to erase a keyfob ID code.
   - “REMO CONT ID CONFIR”
     Use this mode to confirm if a keyfob ID code is registered or not.

KEYFOB ID SET UP WITHOUT CONSULT-III

ID Code Entry Procedure

INFOID:0000000001728548

KEYFOB ID SET UP WITHOUT CONSULT-III

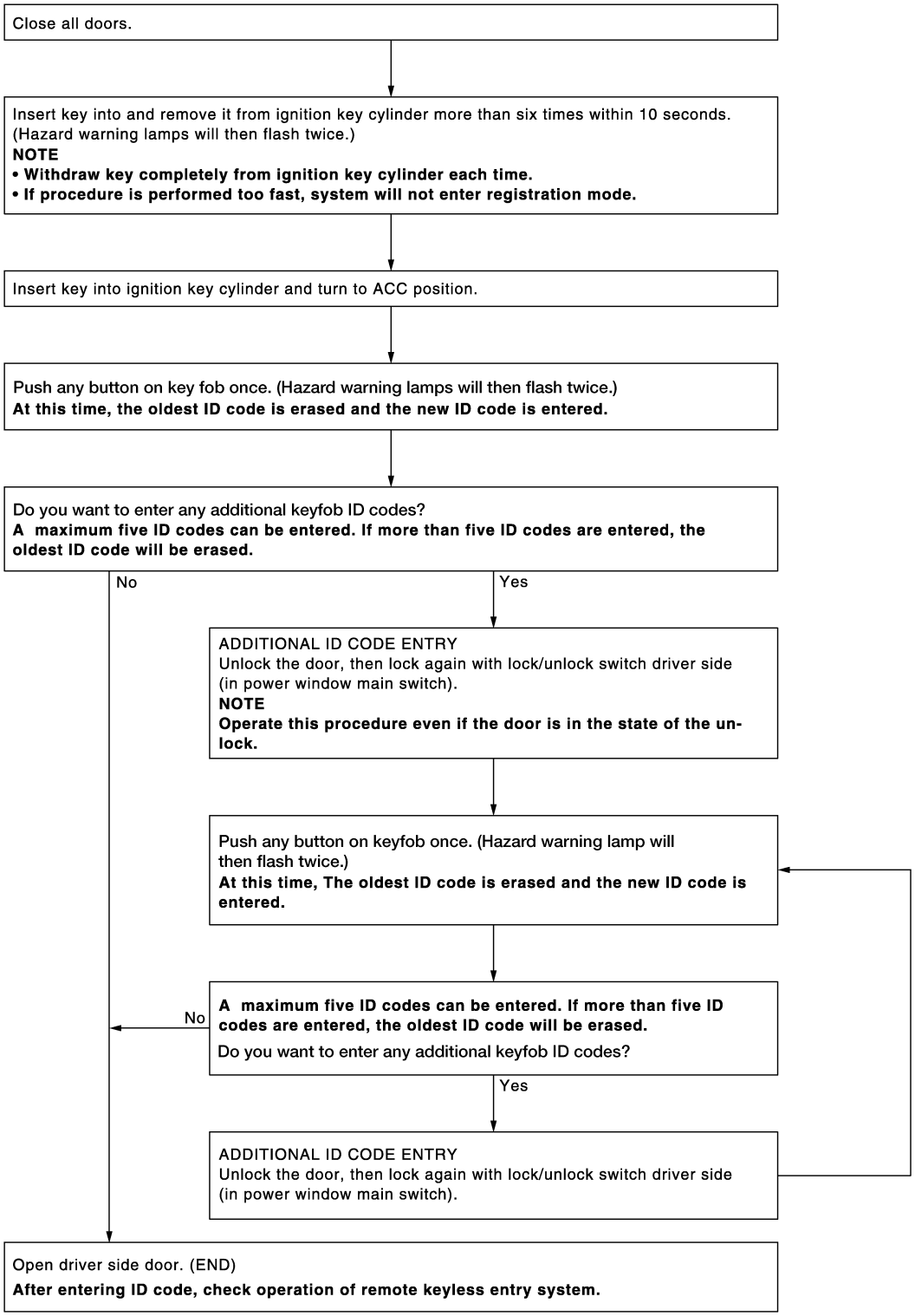

NOTE:

- If a keyfob is lost, the ID code of the lost keyfob must be erased to prevent unauthorized use. A specific ID code can be erased with CONSULT-III. However, when the ID code of a lost keyfob is not known, all control-

ler ID codes should be erased. After all ID codes are erased, the ID codes of all remaining and/or new keyfobs must be re-registered.
To erase all ID codes in memory, register one ID code (keyfob) five times. After all ID codes are erased, the ID codes of all remaining and/or new keyfobs must be re-registered.

- When registering an additional keyfob, the existing ID codes in memory may or may not be erased. If five ID codes are stored in memory, when an additional code is registered, only the oldest code is erased. If less than five ID codes are stored in memory, when an additional ID code is registered, the new ID code is added and no ID codes are erased.
- If you need to activate more than two additional new keyfobs, repeat the procedure “Additional ID code entry” for each new keyfob.
- Entry of maximum five ID codes is allowed. When more than five ID codes are entered, the oldest ID code will be erased.
- Even if same ID code that is already in the memory is input, the same ID code can be entered. The code is counted as an additional code.

BACK DOOR HALF SWITCH

Diagnosis Procedure

INFOID:0000000001728549

1. BACK DOOR HALF SWITCH SIGNAL INSPECTION

1. Turn ignition switch OFF.
2. While opening and closing the back door, check voltage between back door control unit connector D509 terminal 7 and ground.

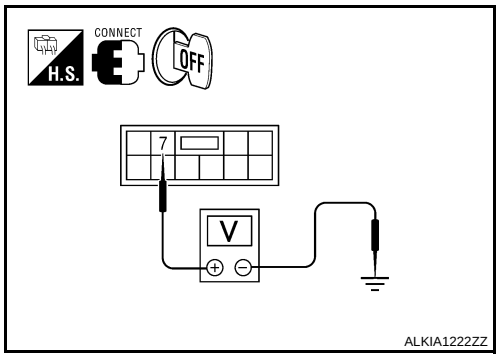

Terminals		Back door position	Voltage (V) (Approx.)
(+)	(-)		
7	Ground	Half-latch	0
		Open/close	Battery voltage

s the inspection result normal?

YES >> Switch is OK.
NO >> GO TO 2.

2. BACK DOOR HALF SWITCH CIRCUIT INSPECTION

1. Disconnect back door control unit and back door cinching latch unit connectors.
2. Check continuity between back door control unit connector (A) D509 terminal 7 and back door cinching latch unit connector (B) D502 terminal 6.

7 - 6 : Continuity should exist.

3. Check continuity between back door control unit connector (A) D509 terminal 7 and ground.

7 - Ground : Continuity should not exist.

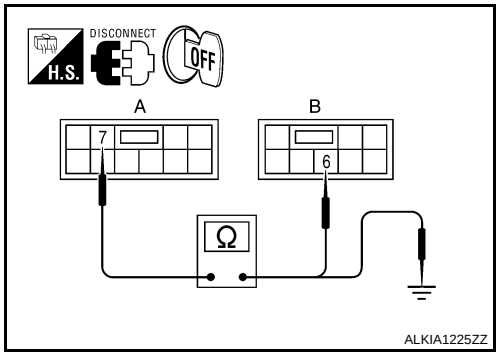

s the inspection result normal?

YES >> GO TO 3.
NO >> Repair or replace harness.

3. BACK DOOR HALF SWITCH GROUND INSPECTION

Check continuity between back door cinching latch unit connector D502 terminal 8 and ground.

8 - Ground : Continuity should exist.

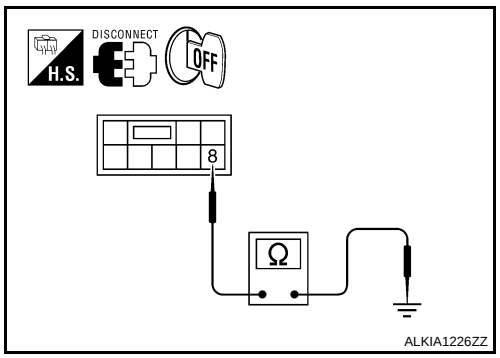

s the inspection result normal?

YES >> GO TO 4.
NO >> Repair or replace harness.

4. BACK DOOR HALF SWITCH SIGNAL INSPECTION

Check continuity between back door cinching latch unit terminals 6 and 8.

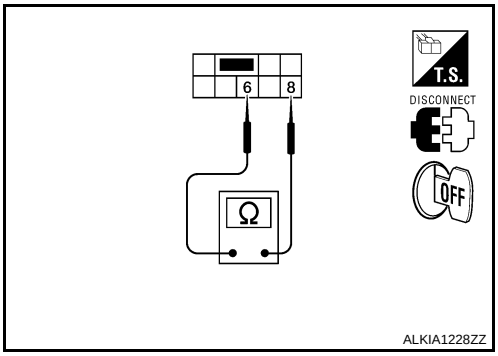

Terminals		Back door position	Continuity
6	8	Half-latch	Yes
		Open/close	No

s the inspection result normal?

YES >> Replace back door control unit.
NO >> Replace back door cinching latch unit.

BACK DOOR CLOSE SWITCH SYSTEM

Diagnosis Procedure

INFOID:0000000001728550

1. BACK DOOR CLOSE SWITCH SIGNAL INSPECTION

1. Turn ignition switch OFF.
2. While opening and closing the back door, check voltage between back door control unit connector D509 terminal 8 and ground.

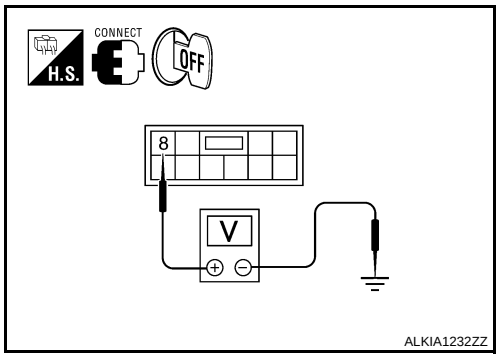

Terminals		Back door position	Voltage (V) (Approx.)
(+)	(-)		
8	Ground	Open/half-latch	Battery voltage
		Closed	0

s the inspection result normal?

YES >> Switch is OK.
NO >> GO TO 2.

2. BACK DOOR CLOSE SWITCH CIRCUIT INSPECTION

1. Disconnect back door control unit and back door cinching latch unit connectors.
2. Check continuity between back door control unit connector (A) D509 terminal 8 and back door cinching latch unit connector (B) D502 terminal 5.

8 - 5 : Continuity should exist.

3. Check continuity between back door control unit connector (A) D509 terminal 8 and ground.

8 - Ground : Continuity should not exist.

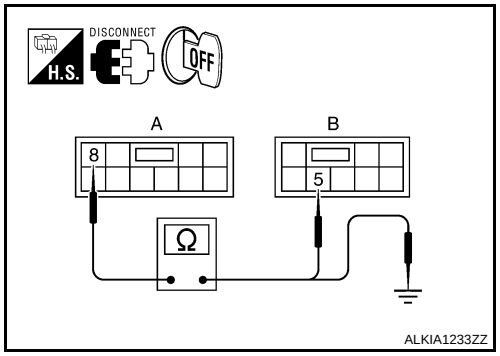

s the inspection result normal?

YES >> GO TO 3.
NO >> Repair or replace harness.

3. BACK DOOR CLOSE SWITCH GROUND INSPECTION

Check continuity between back door cinching latch unit connector D502 terminal 8 and ground.

8 - Ground : Continuity should exist.

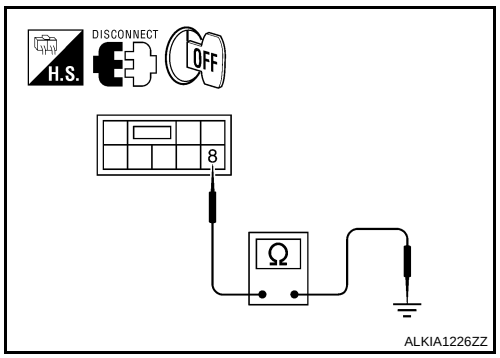

s the inspection result normal?

YES >> GO TO 4.
NO >> Repair or replace harness.

4. BACK DOOR CLOSE SWITCH SIGNAL INSPECTION

Check continuity between back door cinching latch unit terminals 5 and 8.

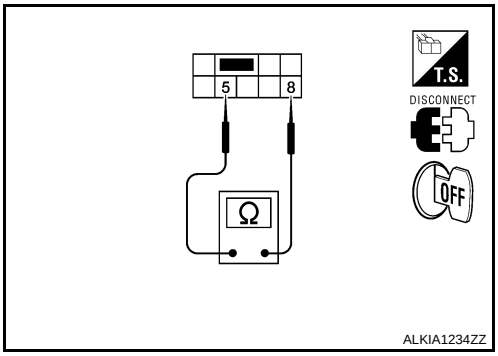

Terminals		Back door position	Continuity
5	8	Half-latch/open	No
		Closed	Yes

s the inspection result normal?

YES >> Replace back door control unit.
NO >> Replace back door cinching latch unit.

BACK DOOR NEUTRAL SWITCH

Diagnosis Procedure

INFOID:0000000001728551

1. BACK DOOR NEUTRAL SWITCH SIGNAL INSPECTION

1. Turn ignition switch OFF.
2. While opening and closing the back door, check voltage between back door control unit connector D509 terminal 9 and ground.

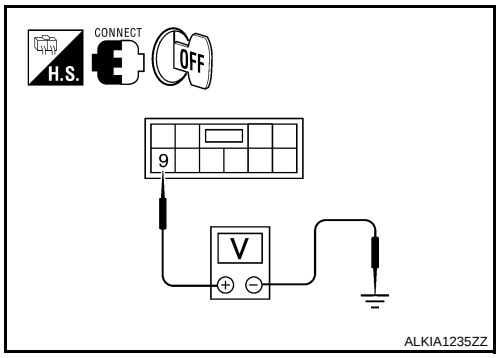

Terminals		Back door position	Voltage (V) (Approx.)
(+)	(-)		
9	Ground	Half-latch/closed	Battery voltage
		Open	0

s the inspection result normal?

YES >> Switch is OK.
NO >> GO TO 2.

2. BACK DOOR NEUTRAL SWITCH CIRCUIT INSPECTION

1. Disconnect back door control unit and back door cinching latch unit connectors.
2. Check continuity between back door control unit connector (A) D509 terminal 9 and back door cinching latch unit connector (B) D502 terminal 4.

9 - 4 : Continuity should exist.

3. Check continuity between back door control unit connector (A) D509 terminal 9 and ground.

9 - Ground : Continuity should not exist.

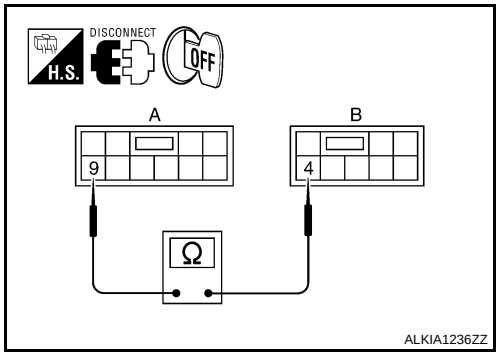

s the inspection result normal?

YES >> GO TO 3.
NO >> Repair or replace harness.

3. BACK DOOR NEUTRAL SWITCH GROUND INSPECTION

Check continuity between back door cinching latch unit connector D502 terminal 8 and ground.

8 - Ground : Continuity should exist.

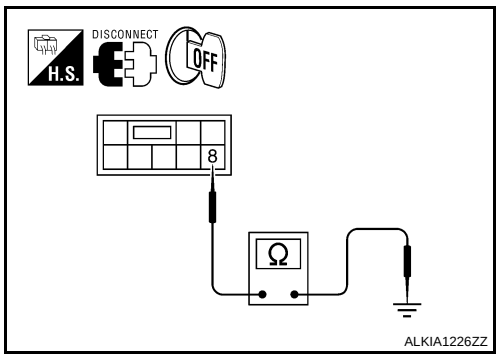

s the inspection result normal?

YES >> GO TO 4.
NO >> Repair or replace harness.

4. BACK DOOR NEUTRAL SWITCH SIGNAL INSPECTION

Check continuity between back door cinching latch unit terminals 4 and 8.

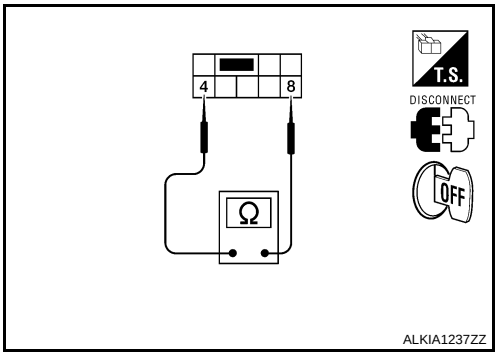

Terminals		Back door position	Continuity
4	8	Half-latch/closed	No
		Open	Yes

s the inspection result normal?

YES >> Replace back door control unit.
NO >> Replace back door cinching latch unit.

BACK DOOR RELEASE SWITCH

Diagnosis Procedure

INFOID:0000000001728552

1. CHECK BACK DOOR RELEASE SWITCH

With CONSULT-II

Check back door release switch (“BD/TR REQ SW”) in “DATA MONITOR” mode.

Monitor item	Condition
BD/TR REQ SW	Back door release switch is pressed: ON
	Back door release switch is released: OFF

Without CONSULT-II

1. Turn ignition switch OFF.
2. Check voltage between Intelligent Key Unit connector M164 terminal 24 and ground.

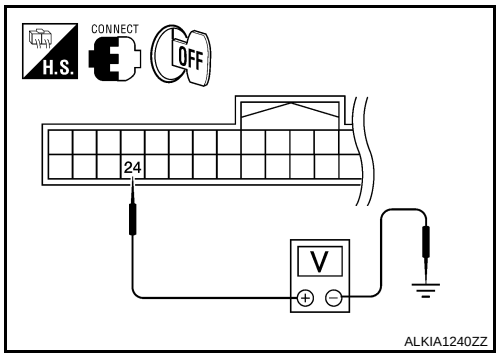

Connector	Terminals (+)	Terminals (–)	Condition	Voltage (V) (Approx.)
M164	24	Ground	Back door release switch is pressed	0
			Back door release switch is released	5

OK or NG

OK >> GO TO 6.
NG >> GO TO 2.

2. CHECK BACK DOOR RELEASE SWITCH OPERATION

1. Turn ignition switch OFF.
2. Disconnect back door release switch connector.
3. Check continuity between back door release switch terminals 1 and 2.

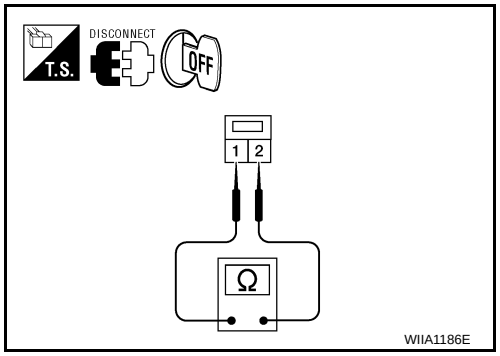

Component	Terminals		Condition	Continuity
back door release switch	1	2	Back door release switch is pressed	Yes
			Back door release switch is released	No

OK or NG

OK >> GO TO 3.
NG >> Replace back door release switch.

3. CHECK BACK DOOR RELEASE SWITCH GROUND CIRCUIT

Check continuity between back door release switch harness connector D510 terminal 2 and ground.

2 - Ground : Continuity should exist.

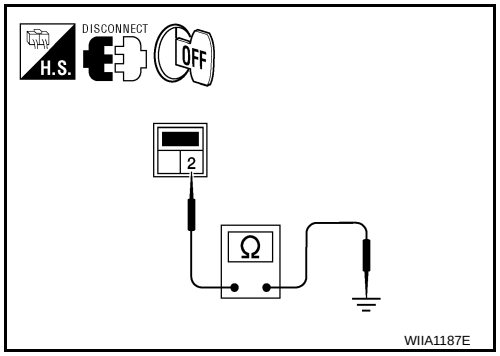

OK or NG

OK >> GO TO 4.
NG >> Repair or replace back door release switch ground circuit.

4. CHECK BACK DOOR RELEASE SWITCH CIRCUIT

1. Disconnect Intelligent Key unit connector.
2. Check continuity between Intelligent Key Unit harness connector M164 terminals 24 and back door release switch harness connector D510 terminal 1.

24 - 1 : Continuity should exist.

3. Check continuity between Intelligent Key Unit harness connector M164 terminal 24 and ground.

24 - Ground : Continuity should not exist.

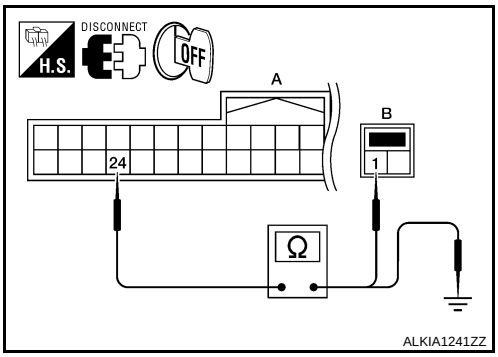

OK or NG

OK >> GO TO 5.
NG >> Repair or replace harness between Intelligent Key Unit and back door release switch.

5. CHECK BACK DOOR RELEASE SWITCH SIGNAL

1. Connect Intelligent Key Unit connector.
2. Check voltage between back door release switch harness connector D510 terminal 1 and ground.

1 - Ground : Approx. 5v

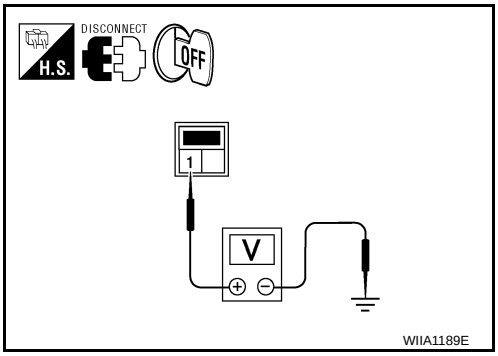

OK or NG

OK >> Check condition of harness and connector.
NG >> Replace Intelligent Key Unit. Refer to SEC-95, "Removal and Installation".

6. CHECK INTELLIGENT KEY UNIT OUTPUT

Check voltage between back door control unit connector D509 terminal 6 and ground.

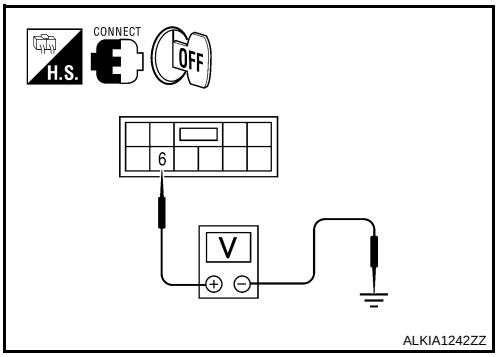

Connector	Terminals		Condition	Voltage (V) (Approx.)
	(+)	(–)		
D509	6	Ground	Back door release switch is pressed	0
			Back door release switch is released	Battery voltage

OK or NG

OK >> back door release switch is OK.
NG >> GO TO 7.

7. CHECK BACK DOOR CONTROL UNIT

1. Disconnect Intelligent Key unit and back door control unit connectors.
2. Check continuity between Intelligent Key Unit harness connector M164 terminal 23 and back door control unit connector D509 terminal 6.

23 - 6 : Continuity should exist.

3. Check continuity between Intelligent Key Unit harness connector M164 terminal 23 and ground.

23 - Ground : Continuity should not exist.

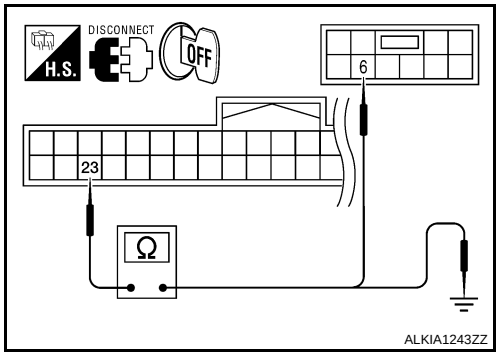

OK or NG

OK >> Replace back door control unit.
NG >> Repair or replace harness between Intelligent Key Unit and back door control unit.

BACK DOOR CINCHING LATCH UNIT MOTOR

Diagnosis Procedure

INFOID:0000000001728553

1. CINCH LATCH MOTOR CIRCUIT INSPECTION

1. Turn ignition switch OFF.
2. Disconnect back door control unit and back door cinching latch unit connectors.
3. Check continuity between back door control unit connector (A) D509 terminals 2, 3 and back door cinching latch unit connector D502 (B) terminals 1, 2.

   2 - 1 : Continuity should exist.
   3 - 2 : Continuity should exist.

4. Check continuity between back door control unit connector (A) D509 terminals 2, 3 and ground.

   2 - Ground : Continuity should not exist.
   3 - Ground : Continuity should not exist.

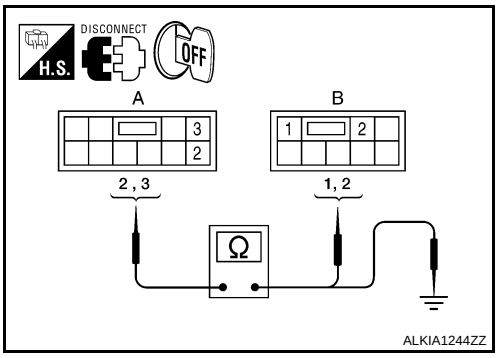

Is the inspection result normal?

YES >> GO TO 2.
NO >> Repair the harness between the back door control unit and the back door cinching latch unit.

2. CINCH LATCH MOTOR OPERATION INSPECTION

Connect battery power to terminals 1 and 2 on the back door cinching latch unit and check motor operation.

1 (+) - 2 (-) : It operates.
1 (-) - 2 (+) : It operates. (Reverse rotation)

Is the inspection result normal?

YES >> Motor is OK.
NO >> Replace the back door cinching latch unit.

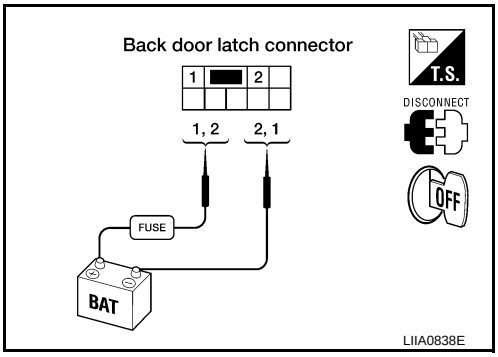

HOMELINK UNIVERSAL TRANSCEIVER

Description

INFOID:0000000001728554

Homelink universal transceiver can store and transmit a maximum of 3 radio signals.
Allows operation of garage doors, gates, home and office lighting, entry door locks and security system, etc.
Homelink universal transceiver power supply uses vehicle battery, which enables it to maintain every program in case battery is discharged or removed.

Component Function Check

INFOID:0000000001728555

1. CHECK FUNCTION

Check that system receiver (garage door opener, etc.) operates with original hand-held transmitter.

Is the inspection result normal?

YES >> GO TO 2.
NO >> Receiver or hand-held transmitter is malfunctioning.

2. CHECK ILLUMINATION

1. Turn ignition switch “OFF”.
2. Press each of the transmitter buttons and watch for the red light to illuminate with each button.

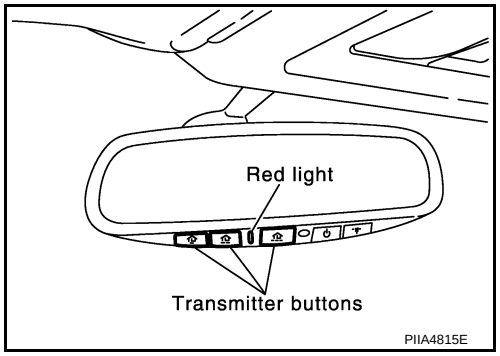

Is the inspection result normal?

YES >> GO TO 3.
NO >> Refer to DLK-257, "Diagnosis Procedure".

3. CHECK TRANSMITTER

Check transmitter with Tool*.
*:For details, refer to Technical Service Bulletin.

Is the inspection result normal?

YES >> Receiver or hand-held transmitter malfunction, not vehicle related.
NO >> Replace auto anti-dazzling inside mirror (homelink universal transceiver).

Diagnosis Procedure

INFOID:0000000001728556

1. CHECK POWER SUPPLY

1. Disconnect auto anti-dazzling inside mirror (homelink universal transceiver) connector.
2. Check voltage between auto anti-dazzling inside mirror (homelink universal transceiver) harness connector and ground.

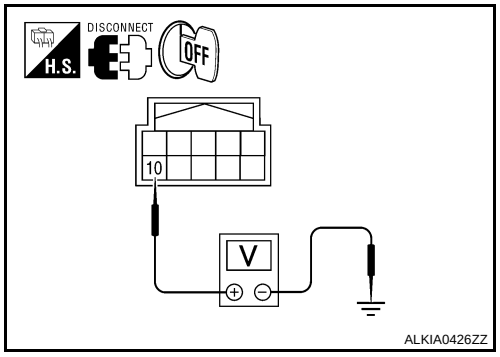

Auto anti-dazzling inside mirror (Homelink universal transceiver) connector	Terminal		Condition	Voltage (V) (Approx.)
R7	10	Ground	Ignition switch position: LOCK	Battery voltage

Is the inspection result normal?

YES >> GO TO 2.
NO >> Check the following.
- 10A fuse [No. 19 located in the fuse block (J/B)]
- Harness for open or short between fuse and auto anti-dazzling inside mirror (homelink universal transceiver).

2. CHECK GROUND CIRCUIT

Check continuity between auto anti-dazzling inside mirror (homelink universal transceiver) harness connector and ground.

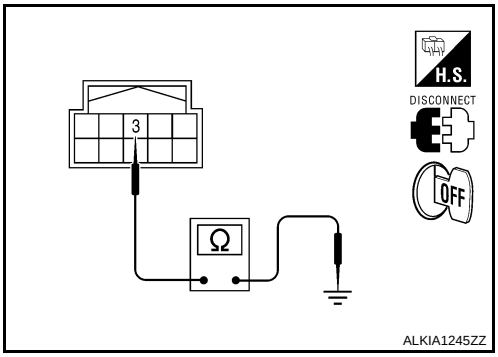

Auto anti-dazzling inside mirror (Homelink universal transceiver) connector	Terminal	Ground	Continuity
R7	3		Yes

Is the inspection result normal?

YES >> GO TO 3.
NO >> Repair harness.

3. CHECK INTERMITTENT INCIDENT

Refer to GI-51, "Intermittent Incident".

>> INSPECTION END.

Wiring Diagram

INFOID:0000000001563756

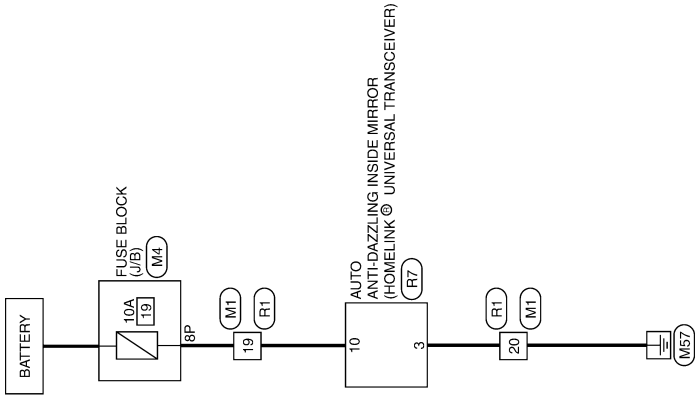

INTEGRATED HOMELINK TRANSMITTER

ALKWA0149GB

INTEGRATED HOMELINK TRANSMITTER CONNECTORS

Connector No.	M1
Connector Name	WIRE TO WIRE
Connector Color	WHITE

H.S.

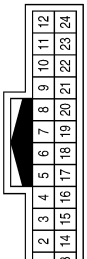

Terminal No.	Color of Wire	Signal Name
19	R/Y	–
20	B	–

Connector No.	M4
Connector Name	FUSE BLOCK (J/B)
Connector Color	WHITE

H.S.

Terminal No.	Color of Wire	Signal Name
8P	R/Y	–

Connector No.	R1
Connector Name	WIRE TO WIRE
Connector Color	WHITE

H.S.

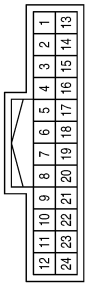

Terminal No.	Color of Wire	Signal Name
19	R/Y	–
20	B	–

Connector No.	R7
Connector Name	AUTO ANTI-DAZZLING INSIDE MIRROR
Connector Color	BLACK

H.S.

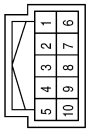

Terminal No.	Color of Wire	Signal Name
3	B	GND
10	R/Y	B

ALKIA0998GB

ECU DIAGNOSIS

BCM (BODY CONTROL MODULE)

Reference Value

INFOID:0000000001563747

VALUES ON THE DIAGNOSIS TOOL

Refer to BCS-38, "Reference Value".

TERMINAL LAYOUT

Refer to BCS-41, "Terminal Layout".

Wiring Diagram — POWER DOOR LOCK SYSTEM —

INFOID:0000000001563748

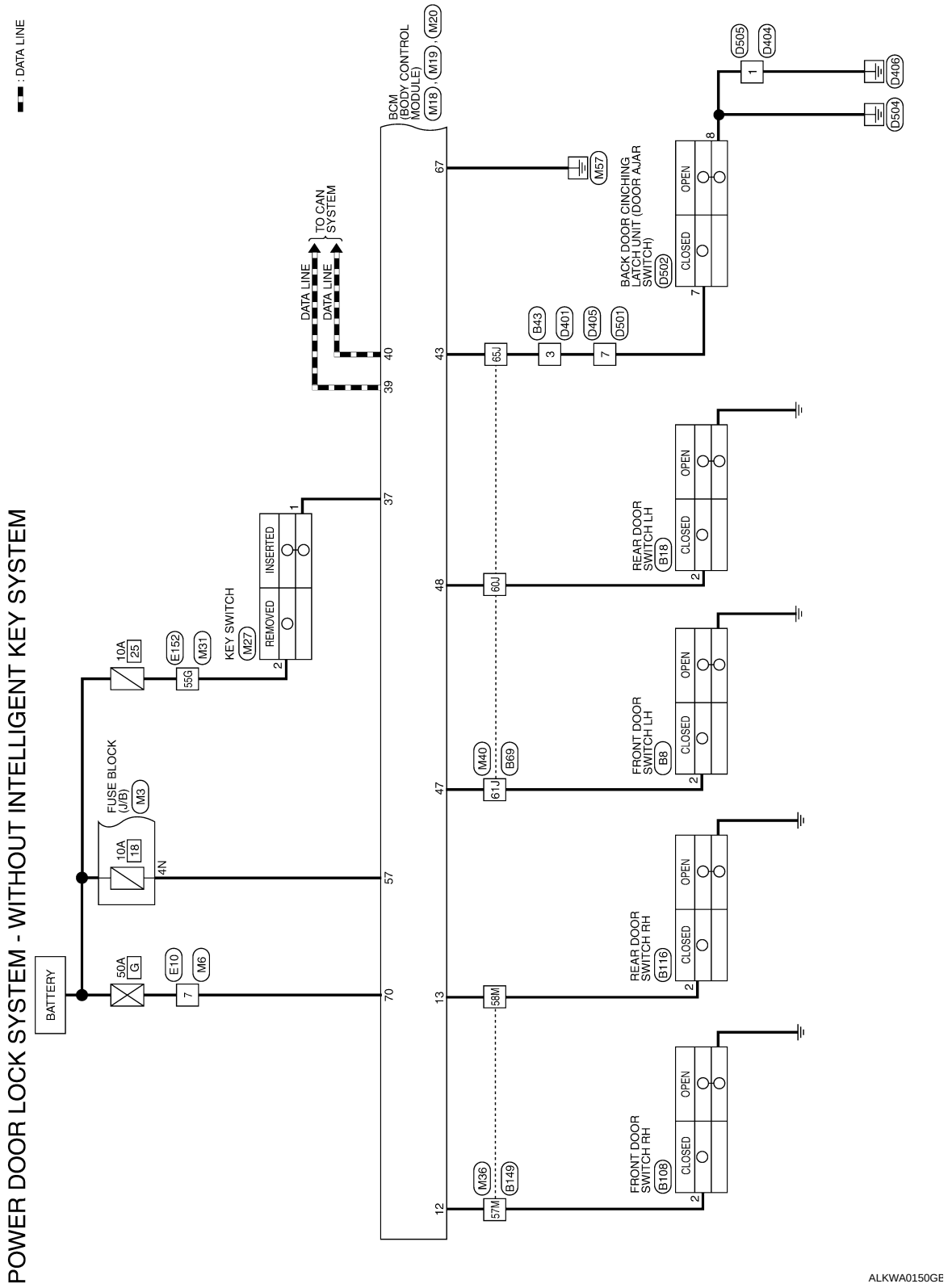

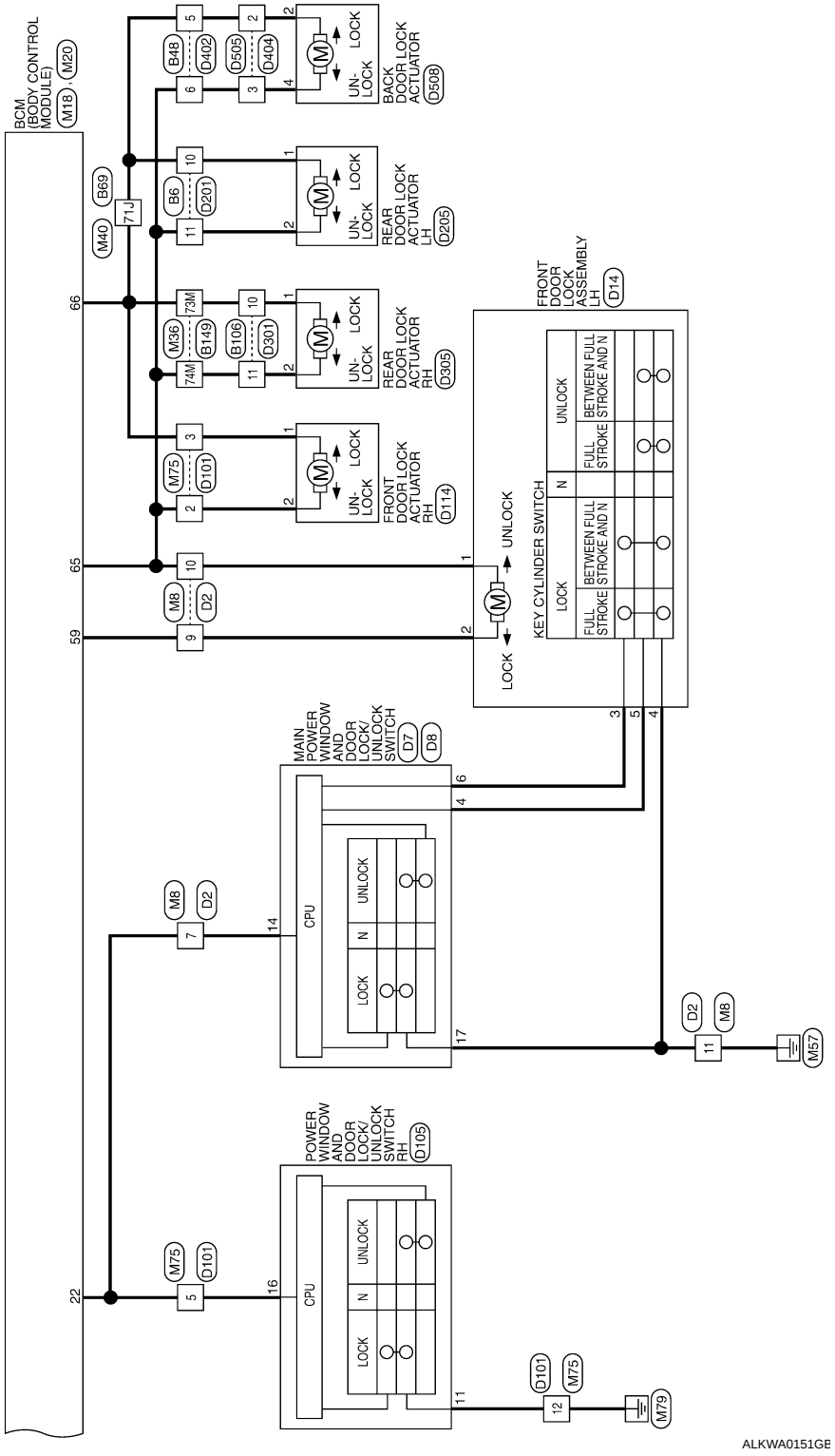
BCM (BODY CONTROL MODULE)
M18, M20
M40
B69
71J
66
65
59
22
M36
74M
73M
B149
B106
D301
M75
D101
M8
D2
B48
D402
D505
D404
B6
D201
FRONT DOOR LOCK ACTUATOR RH D114
REAR DOOR LOCK ACTUATOR RH D305
REAR DOOR LOCK ACTUATOR LH D205
BACK DOOR LOCK ACTUATOR D508
UN-LOCK
LOCK
FRONT DOOR LOCK ASSEMBLY LH D14
KEY CYLINDER SWITCH
FULL STROKE
BETWEEN FULL STROKE AND N
N
UNLOCK
MAIN POWER WINDOW AND DOOR LOCK/ UNLOCK SWITCH D7 D8
POWER WINDOW AND DOOR LOCK/ UNLOCK SWITCH RH D105
CPU
M57
M79
ALKWA0151GB

POWER DOOR LOCK SYSTEM - WITHOUT INTELLIGENT KEY SYSTEM CONNECTORS

Connector No.	M3
Connector Name	FUSE BLOCK (J/B)
Connector Color	WHITE

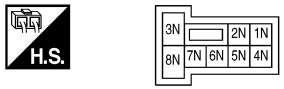

Terminal No.	Color of Wire	Signal Name
4N	R/Y	–

Connector No.	M6
Connector Name	WIRE TO WIRE
Connector Color	WHITE

Terminal No.	Color of Wire	Signal Name
7	W	–

Connector No.	M8
Connector Name	WIRE TO WIRE
Connector Color	WHITE

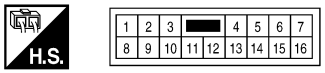

Terminal No.	Color of Wire	Signal Name
7	V	–
9	GR	–
10	V	–
11	B	–

Connector No.	M18
Connector Name	BCM (BODY CONTROL MODULE)
Connector Color	WHITE

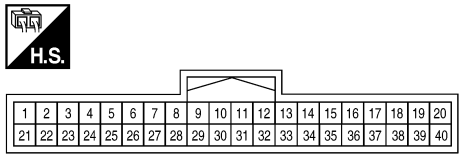

Terminal No.	Color of Wire	Signal Name
12	LG	DOOR SW (AS)
13	L	DOOR SW (RR)
22	V	BUS
37	B	KEY SW
39	L	CAN-H
40	P	CAN-L

Connector No.	M19
Connector Name	BCM (BODY CONTROL MODULE)
Connector Color	WHITE

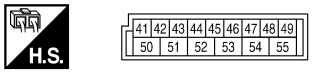

Terminal No.	Color of Wire	Signal Name
43	SB	BACK DOOR SW
47	GR	DOOR SW (DR)
48	P	DOOR SW (RL)

ALKIA0999GB

Connector No.	M20
Connector Name	BCM (BODY CONTROL MODULE)
Connector Color	BLACK

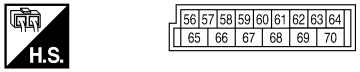

Terminal No.	Color of Wire	Signal Name
57	R/Y	BAT (FUSE)
59	GR	DOOR UNLOCK OUTPUT (DR)
65	V	DOOR LOCK OUTPUT (ALL)
66	L	DOOR UNLOCK OUTPUT (OTHER)
67	B	GND (POWER)
70	W	BAT (F/L)

Connector No.	M27
Connector Name	KEY SWITCH
Connector Color	WHITE

Terminal No.	Color of Wire	Signal Name
1	B	–
2	Y	–

Connector No.	M31
Connector Name	WIRE TO WIRE
Connector Color	WHITE

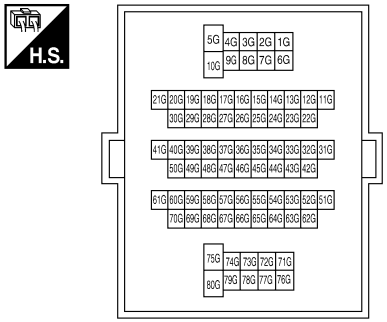

Terminal No.	Color of Wire	Signal Name
55G	Y	–

ALKIA1000GB

Connector No.	M36
Connector Name	WIRE TO WIRE
Connector Color	WHITE

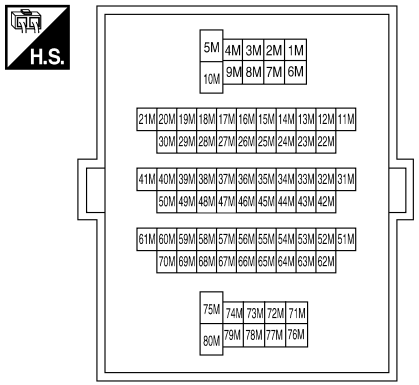

Terminal No.	Color of Wire	Signal Name
57M	LG	–
58M	L	–
73M	SB	–
74M	V	–

Connector No.	M40
Connector Name	WIRE TO WIRE
Connector Color	WHITE

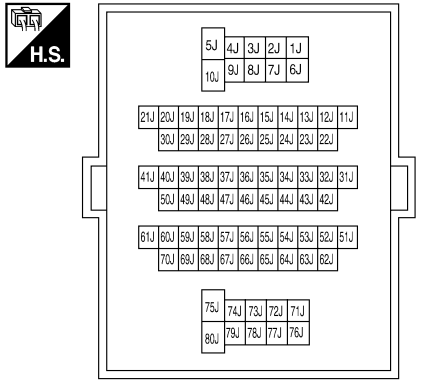

Terminal No.	Color of Wire	Signal Name
60J	P	–
61J	GR	–
65J	SB	–
71J	L	–
72J	V	–

Connector No.	M75
Connector Name	WIRE TO WIRE
Connector Color	WHITE

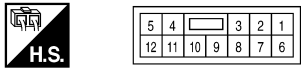

Terminal No.	Color of Wire	Signal Name
2	V	–
3	L	–
5	V	–
12	B	–

ALKIA1001GB

Connector No.	E10
Connector Name	WIRE TO WIRE
Connector Color	WHITE

H.S.

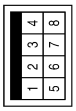

Terminal No.	Color of Wire	Signal Name
7	W	–

Connector No.	E152
Connector Name	WIRE TO WIRE
Connector Color	WHITE

H.S.

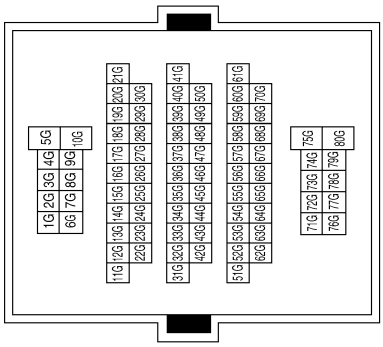

Terminal No.	Color of Wire	Signal Name
55G	Y	–

Connector No.	B6
Connector Name	WIRE TO WIRE
Connector Color	WHITE

H.S.

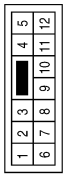

Terminal No.	Color of Wire	Signal Name
10	L	–
11	V	–

Connector No.	B8
Connector Name	FRONT DOOR SWITCH LH
Connector Color	WHITE

H.S.

Terminal No.	Color of Wire	Signal Name
2	GR	–

ALKIA1002GB

Connector No.	B18
Connector Name	REAR DOOR SWITCH LH
Connector Color	WHITE

H.S.

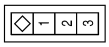

Terminal No.	Color of Wire	Signal Name
2	P	–

Connector No.	B43
Connector Name	WIRE TO WIRE
Connector Color	WHITE

H.S.

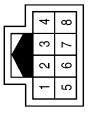

Terminal No.	Color of Wire	Signal Name
3	SB	–

Connector No.	B48
Connector Name	WIRE TO WIRE
Connector Color	WHITE

H.S.

Terminal No.	Color of Wire	Signal Name
5	V	–
6	G	–

Connector No.	B69
Connector Name	WIRE TO WIRE
Connector Color	WHITE

H.S.

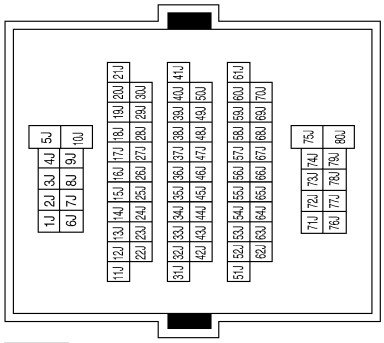

Terminal No.	Color of Wire	Signal Name
60J	P	–
61J	GR	–
65J	SB	–
71J	L	–
72J	V	–

ALKIA1003GB

Connector No.	B106
Connector Name	WIRE TO WIRE
Connector Color	WHITE

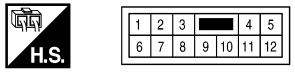

Terminal No.	Color of Wire	Signal Name
10	SB	–
11	V	–

Connector No.	B108
Connector Name	FRONT DOOR SWITCH RH
Connector Color	WHITE

Terminal No.	Color of Wire	Signal Name
2	LG	–

Connector No.	B116
Connector Name	REAR DOOR SWITCH RH
Connector Color	WHITE

Terminal No.	Color of Wire	Signal Name
2	L	–

Connector No.	B149
Connector Name	WIRE TO WIRE
Connector Color	WHITE

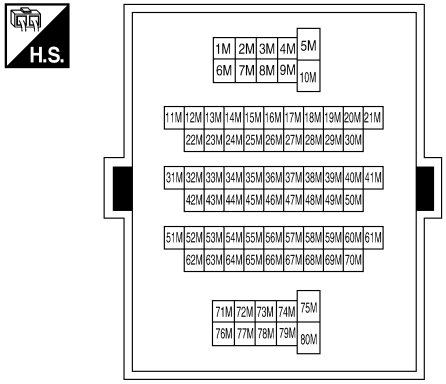

Terminal No.	Color of Wire	Signal Name
57M	LG	–
58M	L	–
73M	SB	–
74M	V	–

Connector No.	D2
Connector Name	WIRE TO WIRE
Connector Color	WHITE

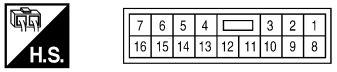

Terminal No.	Color of Wire	Signal Name
7	V	–
9	G	–
10	V	–
11	B	–

ALKIA1004GB

Connector No.	D7
Connector Name	MAIN POWER WINDOW AND DOOR LOCK/UNLOCK SWITCH
Connector Color	WHITE

H.S.

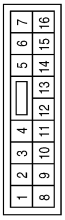

Terminal No.	Color of Wire	Signal Name
4	SB	KEY CYL LOCK SW
6	R/W	KEY CYL UNLOCK SW
14	V	POWER WINDOW SERIAL LINK

Connector No.	D8
Connector Name	MAIN POWER WINDOW AND DOOR LOCK/UNLOCK SWITCH
Connector Color	WHITE

H.S.

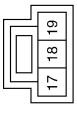

Terminal No.	Color of Wire	Signal Name
17	B	GND

Connector No.	D14
Connector Name	FRONT DOOR LOCK ASSEMBLY LH
Connector Color	GRAY

H.S.

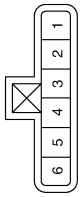

Terminal No.	Color of Wire	Signal Name
1	V	–
2	G	–
3	SB	–
4	B	–
5	R/W	–

Connector No.	D101
Connector Name	WIRE TO WIRE
Connector Color	WHITE

H.S.

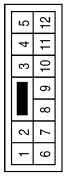

Terminal No.	Color of Wire	Signal Name
2	V	–
3	G/Y	–
5	V	–
12	B	–

Connector No.	D105
Connector Name	POWER WINDOW AND DOOR LOCK/UNLOCK SWITCH RH
Connector Color	WHITE

H.S.

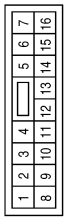

Terminal No.	Color of Wire	Signal Name
11	B	GND
16	V	POWER WINDOW SERIAL LINK

Connector No.	D114
Connector Name	FRONT DOOR LOCK ACTUATOR RH
Connector Color	WHITE

H.S.

Terminal No.	Color of Wire	Signal Name
1	G/Y	–
2	V	–

ALKIA1005GB

Connector No.	D201
Connector Name	WIRE TO WIRE
Connector Color	WHITE

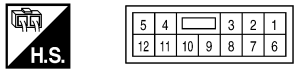

Terminal No.	Color of Wire	Signal Name
10	G	–
11	V	–

Connector No.	D205
Connector Name	REAR DOOR LOCK ACTUATOR LH
Connector Color	WHITE

Terminal No.	Color of Wire	Signal Name
1	G	–
2	V	–

Connector No.	D301
Connector Name	WIRE TO WIRE
Connector Color	WHITE

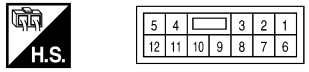

Terminal No.	Color of Wire	Signal Name
10	G	–
11	V	–

Connector No.	D305
Connector Name	REAR DOOR LOCK ACTUATOR RH
Connector Color	WHITE

Terminal No.	Color of Wire	Signal Name
1	G	–
2	V	–

Connector No.	D401
Connector Name	WIRE TO WIRE
Connector Color	WHITE

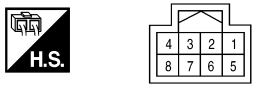

Terminal No.	Color of Wire	Signal Name
3	SB	–

Connector No.	D402
Connector Name	WIRE TO WIRE
Connector Color	WHITE

Terminal No.	Color of Wire	Signal Name
5	V	–
6	G	–

ALKIA1006GB

Connector No.	D404
Connector Name	WIRE TO WIRE
Connector Color	WHITE

Terminal No.	Color of Wire	Signal Name
1	B	–
2	V	–
3	G	–

Connector No.	D405
Connector Name	WIRE TO WIRE
Connector Color	WHITE

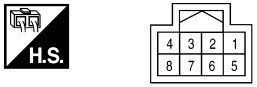

Terminal No.	Color of Wire	Signal Name
7	SB	–

Connector No.	D501
Connector Name	WIRE TO WIRE
Connector Color	WHITE

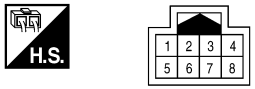

Terminal No.	Color of Wire	Signal Name
7	SB	–

Connector No.	D502
Connector Name	BACK DOOR CINCHING LATCH UNIT
Connector Color	WHITE

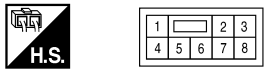

Terminal No.	Color of Wire	Signal Name
7	SB	–
8	B	–

Connector No.	D505
Connector Name	WIRE TO WIRE
Connector Color	WHITE

Terminal No.	Color of Wire	Signal Name
1	B	–
2	V	–
3	G	–

Connector No.	D508
Connector Name	BACK DOOR LOCK ACTUATOR
Connector Color	WHITE

Terminal No.	Color of Wire	Signal Name
2	V	–
4	G	–

AWKIA0098GB

Wiring Diagram — REMOTE KEYLESS ENTRY SYSTEM —

INFOID:0000000001563749

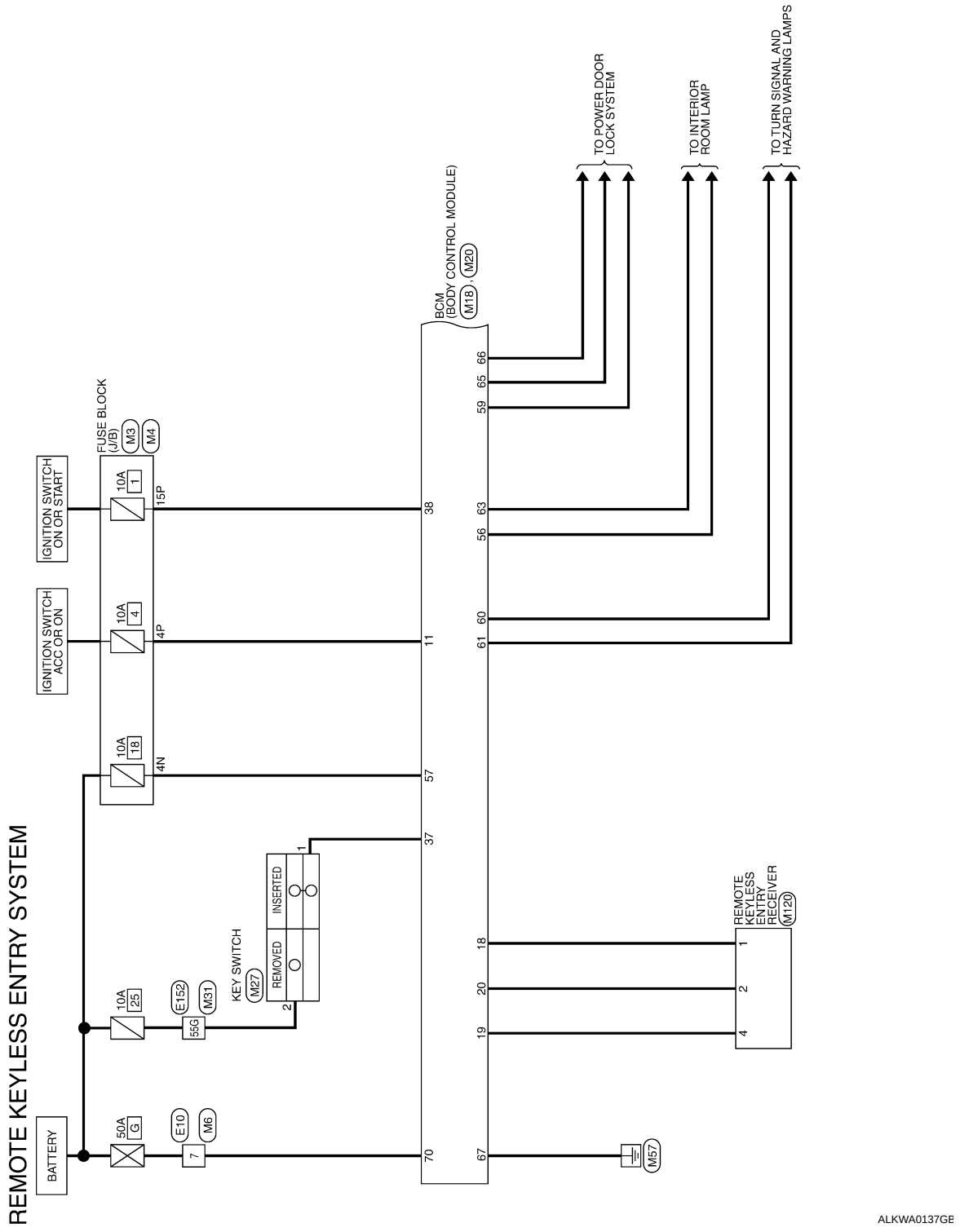

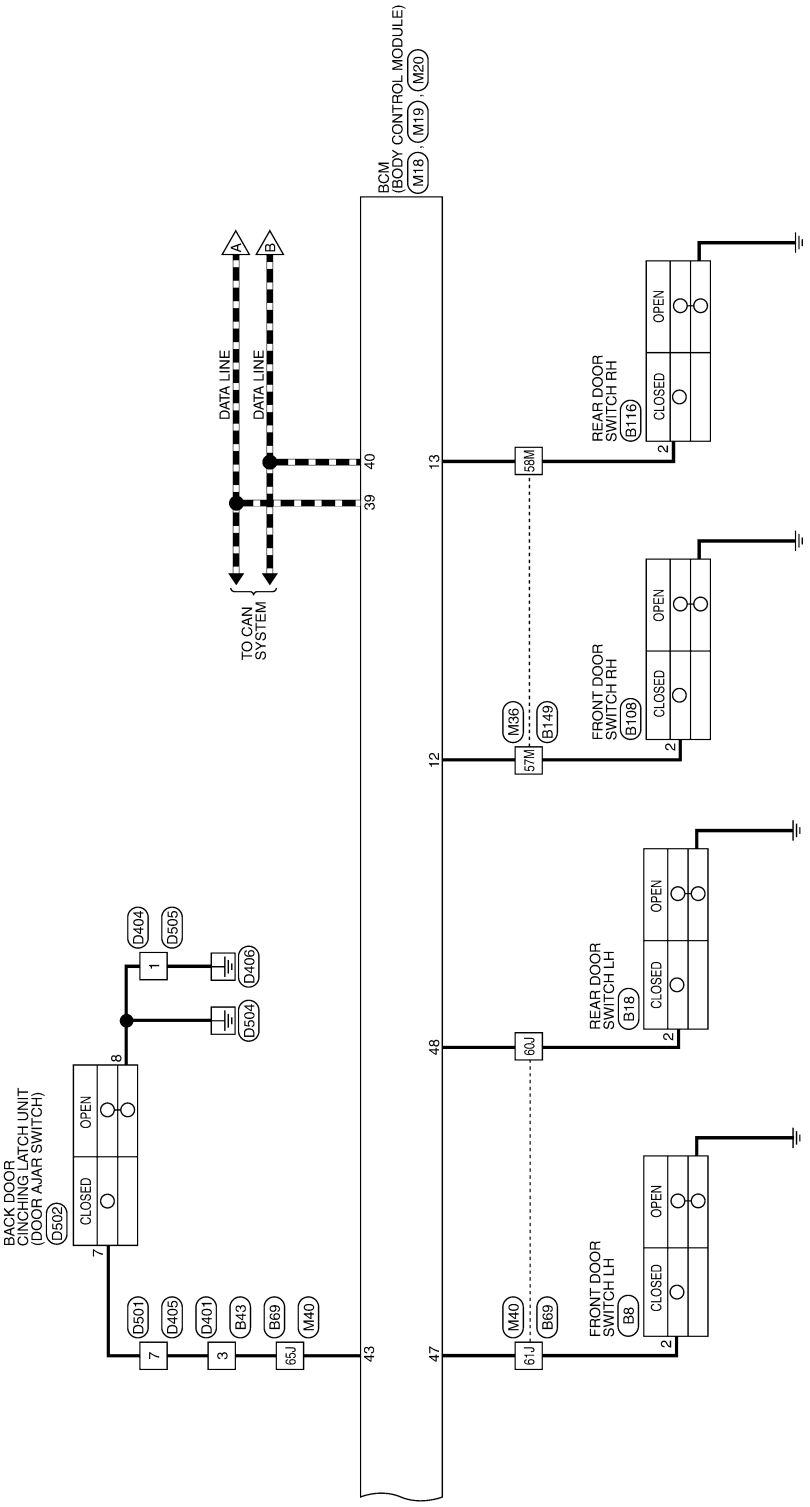

ALKWA0138GE

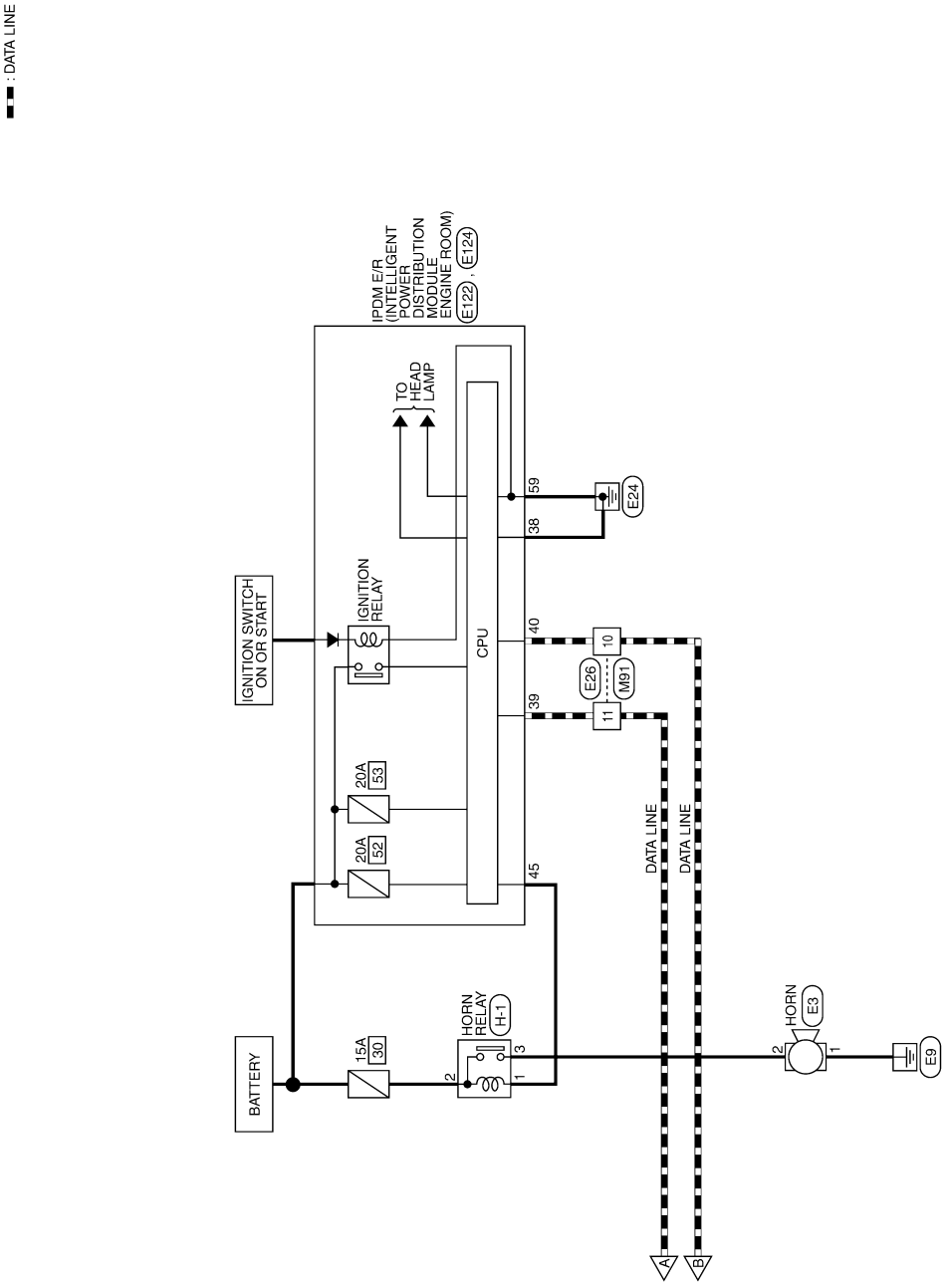

ALKWA0139GB

REMOTE KEYLESS ENTRY SYSTEM CONNECTORS

Connector No.	M3
Connector Name	FUSE BLOCK (J/B)
Connector Color	WHITE

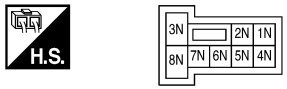

Terminal No.	Color of Wire	Signal Name
4N	R/Y	–

Connector No.	M4
Connector Name	FUSE BLOCK (J/B)
Connector Color	WHITE

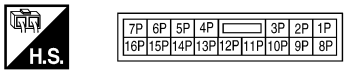

Terminal No.	Color of Wire	Signal Name
4P	G/B	–
15P	W/R	–

Connector No.	M6
Connector Name	WIRE TO WIRE
Connector Color	WHITE

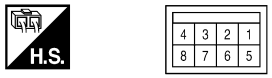

Terminal No.	Color of Wire	Signal Name
7	W	–

Connector No.	M18
Connector Name	BCM (BODY CONTROL MODULE)
Connector Color	WHITE

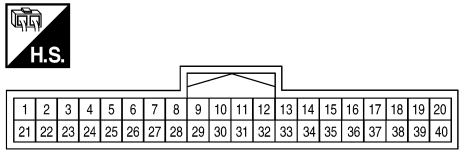

Terminal No.	Color of Wire	Signal Name
11	G/B	ACC SW
12	LG	DOOR SW (AS)
13	L	DOOR SW (RR)
18	BR	SENSOR GND
19	V	PWR
20	G	SIGNAL
37	B	KEY SW
38	W/R	IGN SW
39	L	CAN-H
40	P	CAN-L

Connector No.	M19
Connector Name	BCM (BODY CONTROL MODULE)
Connector Color	WHITE

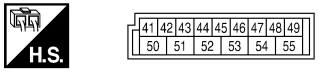

Terminal No.	Color of Wire	Signal Name
43	SB	BACK DOOR SW
47	GR	DOOR SW (DR)
48	P	DOOR SW (RL)

ALKIA0944GB

Connector No.	M20
Connector Name	BCM (BODY CONTROL MODULE)
Connector Color	BLACK

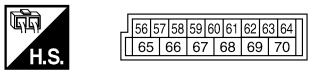

Terminal No.	Color of Wire	Signal Name
56	V	BAT SAVER
57	R/Y	BAT (FUSE)
59	GR	DOOR UNLOCK OUTPUT (DR)
60	LG	FLASHER OUTPUT (LEFT)
61	G	FLASHER OUTPUT (RIGHT)
63	BR	ROOM LAMP
65	V	DOOR LOCK OUTPUT (ALL)
66	L	DOOR UNLOCK OUTPUT (OTHER)
67	B	GND (POWER)
70	W	BAT (F/L)

Connector No.	M27
Connector Name	KEY SWITCH
Connector Color	WHITE

Terminal No.	Color of Wire	Signal Name
1	B	–
2	Y	–

Connector No.	M31
Connector Name	WIRE TO WIRE
Connector Color	WHITE

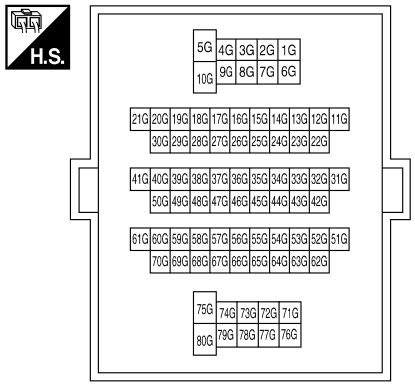

ALKIA0945GB

Terminal No.	Color of Wire	Signal Name
55G	Y	–

Connector No.	M36
Connector Name	WIRE TO WIRE
Connector Color	WHITE

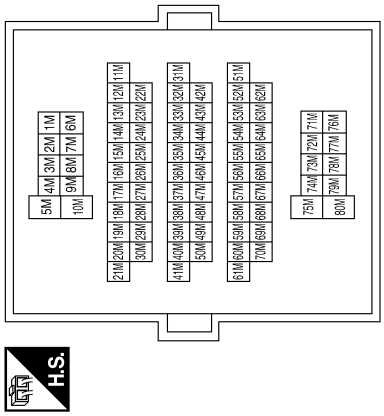

Terminal No.	Color of Wire	Signal Name
57M	LG	–
58M	L	–

Connector No.	M40
Connector Name	WIRE TO WIRE
Connector Color	WHITE

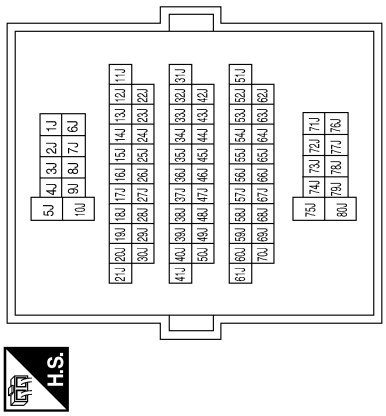

Terminal No.	Color of Wire	Signal Name
60J	P	–
61J	GR	–
65J	SB	–

Connector No.	M91
Connector Name	WIRE TO WIRE
Connector Color	WHITE

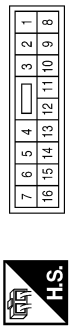

Terminal No.	Color of Wire	Signal Name
10	P	–
11	L	–

ALKIA0946GB

Connector No.	M120
Connector Name	REMOTE KEYLESS ENTRY RECEIVER
Connector Color	WHITE

H.S.

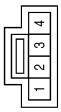

Terminal No.	Color of Wire	Signal Name
1	BR	GND
2	G	SIGNAL
4	V	PWR

Connector No.	E3
Connector Name	HORN
Connector Color	BLACK

H.S.

Terminal No.	Color of Wire	Signal Name
1	B	–
2	G	–

Connector No.	E10
Connector Name	WIRE TO WIRE
Connector Color	WHITE

H.S.

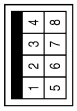

Terminal No.	Color of Wire	Signal Name
7	W	–

Connector No.	E26
Connector Name	WIRE TO WIRE
Connector Color	WHITE

H.S.

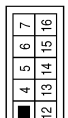

Terminal No.	Color of Wire	Signal Name
10	P	–
11	L	–

Connector No.	E122
Connector Name	IPDM E/R (INTELLIGENT POWER DISTRIBUTION MODULE ENGINE ROOM)
Connector Color	WHITE

H.S.

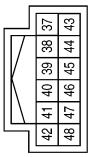

Terminal No.	Color of Wire	Signal Name
38	B	GND (SIGNAL)
39	L	CAN-H
40	P	CAN-L
45	LG	HORN RLY

Connector No.	E124
Connector Name	IPDM E/R (INTELLIGENT POWER DISTRIBUTION MODULE ENGINE ROOM)
Connector Color	BLACK

H.S.

Terminal No.	Color of Wire	Signal Name
59	B	GND (POWER)

ALKIA0947GB

Connector No.	E152
Connector Name	WIRE TO WIRE
Connector Color	WHITE

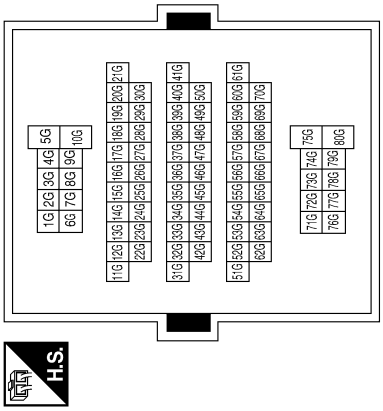

Terminal No.	Color of Wire	Signal Name
55G	Y	–

Connector No.	B8
Connector Name	FRONT DOOR SWITCH LH
Connector Color	WHITE

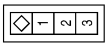

Terminal No.	Color of Wire	Signal Name
2	GR	–

Connector No.	B18
Connector Name	REAR DOOR SWITCH LH
Connector Color	WHITE

Terminal No.	Color of Wire	Signal Name
2	P	–

Connector No.	B43
Connector Name	WIRE TO WIRE
Connector Color	WHITE

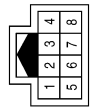

Terminal No.	Color of Wire	Signal Name
3	SB	–

ALKIA0948GB

Connector No.	B69
Connector Name	WIRE TO WIRE
Connector Color	WHITE

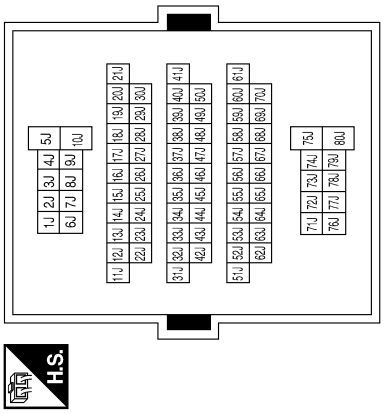

Terminal No.	Color of Wire	Signal Name
60J	P	–
61J	GR	–
65J	SB	–

Connector No.	B108
Connector Name	FRONT DOOR SWITCH RH
Connector Color	WHITE

Terminal No.	Color of Wire	Signal Name
2	LG	–

Connector No.	B149
Connector Name	WIRE TO WIRE
Connector Color	WHITE

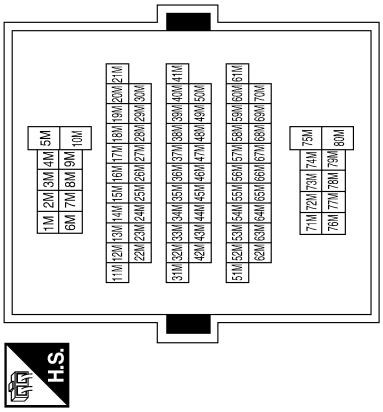

Terminal No.	Color of Wire	Signal Name
57M	LG	–
58M	L	–

Connector No.	B116
Connector Name	REAR DOOR SWITCH RH
Connector Color	WHITE

Terminal No.	Color of Wire	Signal Name
2	L	–

ALKIA0949GB

Connector No.	D401
Connector Name	WIRE TO WIRE
Connector Color	WHITE

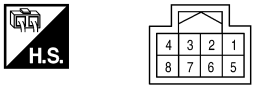

Terminal No.	Color of Wire	Signal Name
3	SB	–

Connector No.	D404
Connector Name	WIRE TO WIRE
Connector Color	WHITE

Terminal No.	Color of Wire	Signal Name
1	B	–

Connector No.	D405
Connector Name	WIRE TO WIRE
Connector Color	WHITE

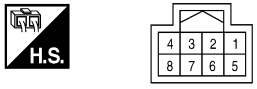

Terminal No.	Color of Wire	Signal Name
7	SB	–

Connector No.	D501
Connector Name	WIRE TO WIRE
Connector Color	WHITE

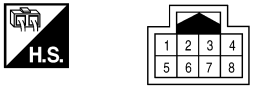

Terminal No.	Color of Wire	Signal Name
7	SB	–

Connector No.	D502
Connector Name	BACK DOOR CINCHING LATCH UNIT
Connector Color	WHITE

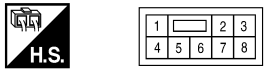

Terminal No.	Color of Wire	Signal Name
7	SB	–
8	B	–

Connector No.	D505
Connector Name	WIRE TO WIRE
Connector Color	WHITE

Terminal No.	Color of Wire	Signal Name
1	B	–

ALKIA0950GB

Connector No.	H-1
Connector Name	FUSE AND FUSIBLE LINK BOX
Connector Color	–

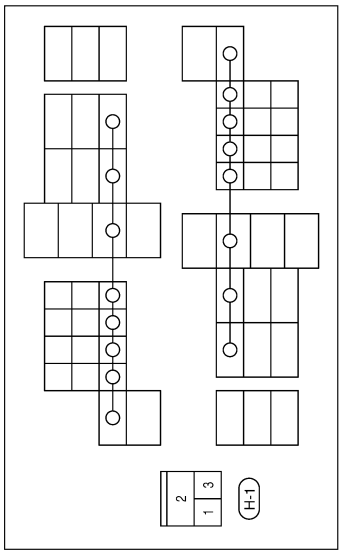

Terminal No.	Color of Wire	Signal Name
1	BR	–
2	O	–
3	G	–

ALKIA0951GB

Fail Safe

INFOID:0000000001563750

Fail-safe index

BCM performs fail-safe control when any DTC listed below is detected.

Display contents of CONSULT	Fail-safe	Cancellation
U1000: CAN COMM CIRCUIT	Inhibit engine cranking	When the BCM re-establishes communication with the other modules.
U1010: CONTROL UNIT (CAN)	Inhibit engine cranking	When the BCM re-start communicating with the other modules.

DTC Inspection Priority Chart

INFOID:0000000001563751

If some DTCs are displayed at the same time, perform inspections one by one based on the following priority chart.

Priority	DTC
1	• U1000: CAN COMM CIRCUIT • U1010: CONTROL UNIT (CAN)

DTC Index

INFOID:0000000001563752

NOTE:

Details of time display

- CRNT: Displays when there is a malfunction now or after returning to the normal condition until turning ignition switch OFF → ON again.
- 1 - 39: Displayed if any previous malfunction is present when current condition is normal. It increases like 1 → 2 → 3...38 → 39 after returning to the normal condition whenever ignition switch OFF → ON. The counter remains at 39 even if the number of cycles exceeds it. It is counted from 1 again when turning ignition switch OFF → ON after returning to the normal condition if the malfunction is detected again.

CONSULT display	Fail-safe	Intelligent Key warning lamp ON	Reference page
No DTC is detected. further testing may be required.	—	—	—
U1000: CAN COMM CIRCUIT	—	—	DLK-38
U1010: CONTROL UNIT (CAN)	—	—	DLK-39

BACK DOOR CONTROL UNIT

Reference Value

INFOID:0000000001728558

TERMINAL LAYOUT

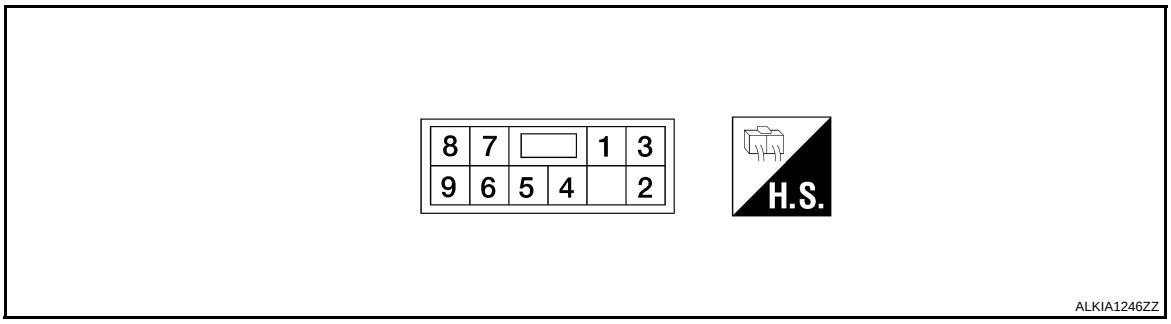

PHYSICAL VALUES

Terminal	Wire Color	Item	Condition	Voltage (V) (Approx.)
1	R/B	Battery power supply	—	Battery voltage
2	Y	Back door cinching latch unit motor	Back door closing	Battery voltage
			Back door opening	0
3	L	Back door cinching latch unit motor	Back door closing	0
			Back door opening	Battery voltage
4	B	Ground	—	—
5	GR	Door lock sensor output	RF door door lock UNLOCKED	0
			RF door door lock LOCKED	Battery voltage
6	G	Back door release switch output	Back door release switch ON	0
			Back door release switch OFF	Battery voltage
7	BR	Half switch signal	Back door open	0
			Back door closed or latching	Battery voltage
8	P	Close switch signal	Back door open or closed	Battery voltage
			During opening (5 seconds)	0
9	W	Neutral switch signal	Back door open or closed	Battery voltage
			During opening (5 seconds)	0

Wiring Diagram—BACK DOOR OPENER—

INFOID:0000000001728559

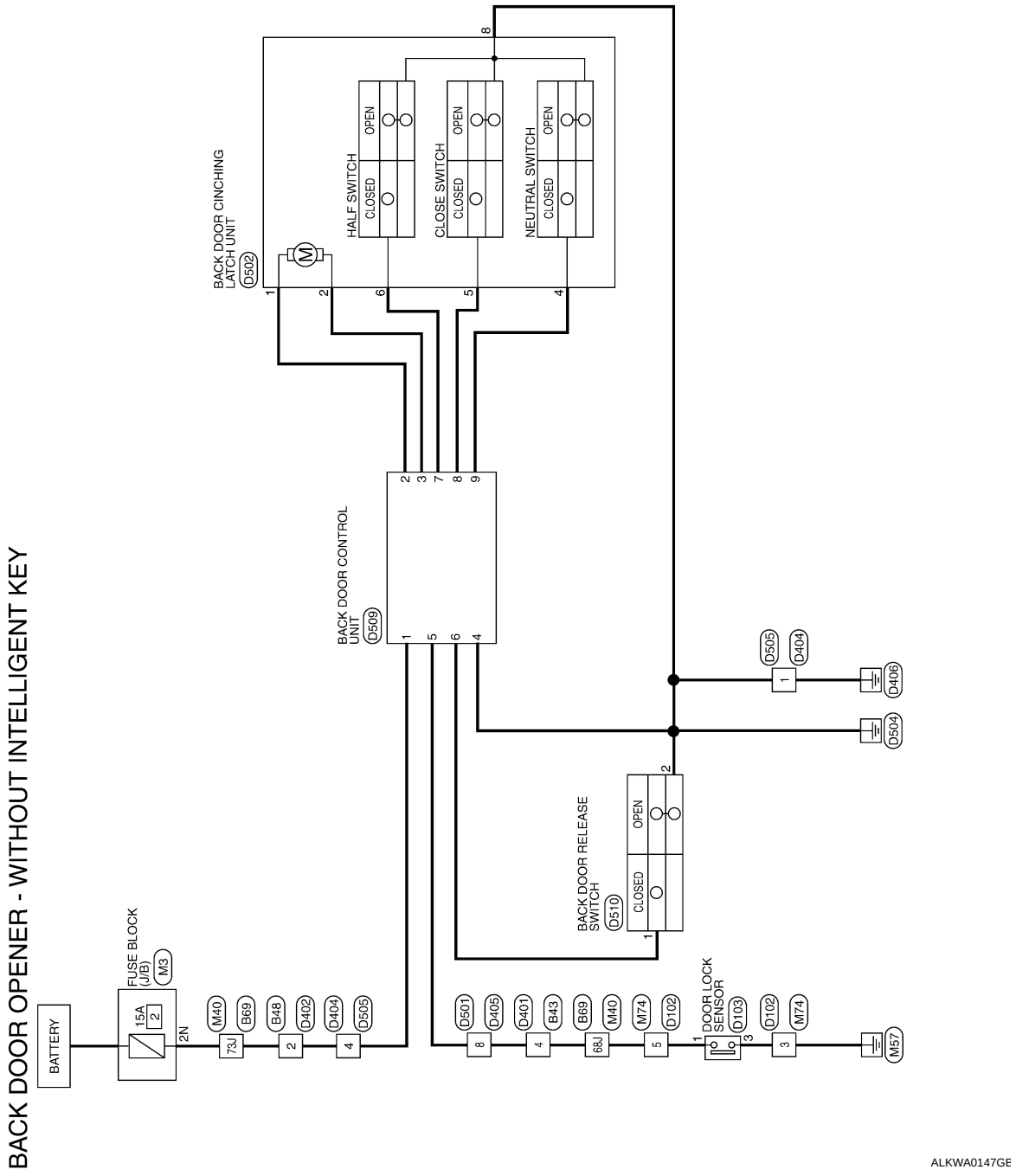

BACK DOOR OPENER - WITHOUT INTELLIGENT KEY CONNECTORS

Connector No.	M3
Connector Name	FUSE BLOCK (J/B)
Connector Color	WHITE

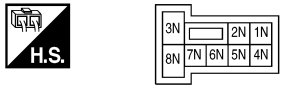

Terminal No.	Color of Wire	Signal Name
2N	R/B	–

Connector No.	M40
Connector Name	WIRE TO WIRE
Connector Color	WHITE

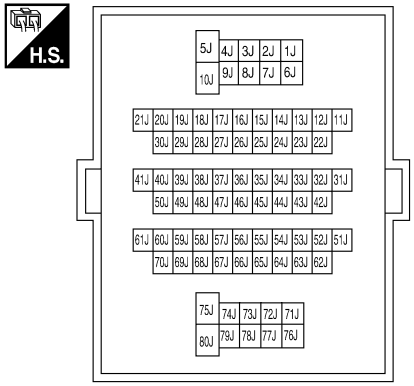

Terminal No.	Color of Wire	Signal Name
68J	GR	–
73J	R/B	–

Connector No.	M74
Connector Name	WIRE TO WIRE
Connector Color	WHITE

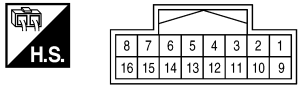

Terminal No.	Color of Wire	Signal Name
3	B	–
5	GR	–

Connector No.	B43
Connector Name	WIRE TO WIRE
Connector Color	WHITE

Terminal No.	Color of Wire	Signal Name
4	GR	–

Connector No.	B48
Connector Name	WIRE TO WIRE
Connector Color	WHITE

Terminal No.	Color of Wire	Signal Name
2	R/B	–

ALKIA0991GB

Connector No.	B69
Connector Name	WIRE TO WIRE
Connector Color	WHITE

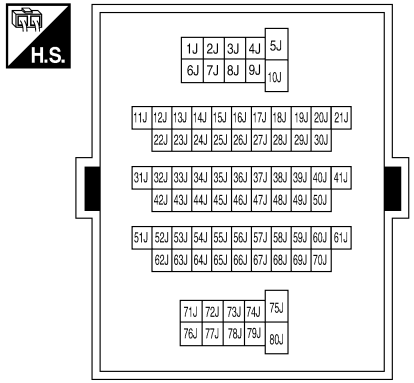

Terminal No.	Color of Wire	Signal Name
68J	GR	–
73J	R/B	–

Connector No.	D102
Connector Name	WIRE TO WIRE
Connector Color	WHITE

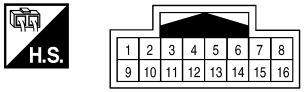

Terminal No.	Color of Wire	Signal Name
3	B	–
5	GR	–

Connector No.	D103
Connector Name	DOOR LOCK SENSOR
Connector Color	BLACK

Terminal No.	Color of Wire	Signal Name
1	GR	–
3	B	–

Connector No.	D401
Connector Name	WIRE TO WIRE
Connector Color	WHITE

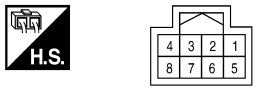

Terminal No.	Color of Wire	Signal Name
4	GR	–

Connector No.	D402
Connector Name	WIRE TO WIRE
Connector Color	WHITE

Terminal No.	Color of Wire	Signal Name
2	R/B	–

ALKIA0992GB

Connector No.	D404
Connector Name	WIRE TO WIRE
Connector Color	WHITE

Terminal No.	Color of Wire	Signal Name
1	B	–
4	R/B	–

Connector No.	D405
Connector Name	WIRE TO WIRE
Connector Color	WHITE

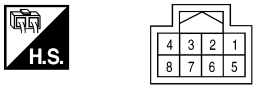

Terminal No.	Color of Wire	Signal Name
8	GR	–

Connector No.	D501
Connector Name	WIRE TO WIRE
Connector Color	WHITE

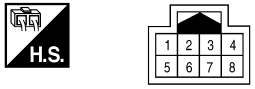

Terminal No.	Color of Wire	Signal Name
8	GR	–

Connector No.	D502
Connector Name	BACK DOOR CINCHING LATCH UNIT
Connector Color	WHITE

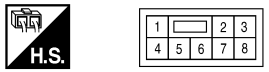

Terminal No.	Color of Wire	Signal Name
1	Y	–
2	L	–
4	W	–
5	P	–
6	BR	–
8	B	–

Connector No.	D505
Connector Name	WIRE TO WIRE
Connector Color	WHITE

Terminal No.	Color of Wire	Signal Name
1	B	–
4	R/B	–

Connector No.	D509
Connector Name	BACK DOOR CONTROL UNIT
Connector Color	WHITE

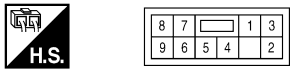

Terminal No.	Color of Wire	Signal Name
1	R/B	–
2	Y	–
3	L	–
4	B	–
5	GR	–
6	G	–
7	BR	–
8	P	–
9	W	–

ALKIA0993GB

Connector No.	D510
Connector Name	BACK DOOR RELEASE SWITCH
Connector Color	BROWN

Terminal No.	Color of Wire	Signal Name
1	G	–
2	B	–

ALKIA0994GB

Fail Safe

INFOID:0000000001728560

Fail-safe operation

The back door system operation will be interrupted if the back door control unit loses power.

SYMPTOM DIAGNOSIS

DOOR LOCK

Symptom Table

INFOID:0000000001563757

DOOR LOCK SYSTEM

NOTE:

- Before performing the diagnosis in the following table, check “Work flow”. Refer to DLK-195, "Work Flow".
- If the following symptoms” are detected, check systems shown in the “Diagnosis/service procedure” column in this order.

Symptom	Repair order	Refer to page
Key reminder door function does not operate properly.	1. Door switch check	DLK-214
	2. Key switch (Insert) check	DLK-241
	3. Replace BCM.	BCS-54
Power door lock does not operate with door lock and unlock switch on main power window and door lock/unlock switch or power window and door lock/unlock switch RH.	1. Door lock/unlock switch check (driver side)	DLK-217
	2. Door lock/unlock switch check (passenger side)	DLK-218
Specific door lock actuator does not operate.	1. Door lock actuator check (Front LH)	DLK-225
	2. Door lock actuator check (Front RH)	DLK-226
	3. Door lock actuator check (Rear LH)	DLK-227
	4. Door lock actuator check (Rear RH)	DLK-229
	5. Back door	DLK-230
Power door lock does not operate with front door key cylinder LH operation.	1. Front door lock assembly LH (key cylinder switch) check	DLK-221
	2. Replace BCM.	BCS-54
Power door lock does not operate.	1. BCM power supply and ground circuit check	BCS-32
	2. Door lock/unlock switch check (driver)	DLK-217
	3. Door lock/unlock switch check (passenger)	DLK-218

REMOTE KEYLESS ENTRY SYSTEM

Symptom Table

INFOID:0000000001563758

REMOTE KEYLESS ENTRY SYSTEM

Symptom	Diagnoses/service procedure	Reference page
All functions of remote keyless entry system do not operate.	1. Keyfob battery and function check (use Remote Keyless Entry Tester J-43241) **NOTE:** If the result of keyfob function check is OK, keyfob is not malfunctioning.	DLK-234
	2. Check BCM and remote keyless entry receiver.	DLK-232
The new ID of keyfob cannot be entered.	1. Keyfob battery and function check (use Remote Keyless Entry Tester J-43241) **NOTE:** If the result of keyfob function check is OK, keyfob is not malfunctioning.	DLK-234
	2. Key switch (insert) check	DLK-241
	3. Door switch check	DLK-214
	4. ACC power check	BCS-32
	5. Replace BCM.	BCS-54
Door lock or unlock does not function. (If the power door lock system does not operate manually, check power door lock system)	1. Keyfob battery and function check (use Remote Keyless Entry Tester J-43241) **NOTE:** If the result of keyfob function check is OK, keyfob is not malfunctioning.	DLK-201
	2. Replace BCM.	BCS-54
Hazard and horn reminder does not activate properly when pressing lock or unlock button of keyfob.	1. Check hazard and horn reminder mode with CONSULT-III **NOTE:** Hazard and horn reminder mode can be changed. First check the hazard and horn reminder mode setting.	DLK-201
	2. Door switch check	DLK-214
	3. Replace BCM.	BCS-54
Hazard reminder does not activate properly when pressing lock or unlock button of keyfob. (Horn reminder OK)	1. Check hazard reminder mode with CONSULT-III **NOTE:** Hazard reminder mode can be changed. First check the hazard reminder mode setting.	DLK-201
	2. Check hazard function with hazard switch	—
	3. Replace BCM.	BCS-54
Horn reminder does not activate properly when pressing lock or unlock button of keyfob. (Hazard reminder OK)	1. Check horn reminder mode with CONSULT-III **NOTE:** Horn reminder mode can be changed. First check the horn reminder mode setting.	DLK-201
	2. Check horn function with horn switch	—
	3. IPDM E/R operation check	DLK-236
	4. Replace BCM.	BCS-54

Symptom	Diagnoses/service procedure	Reference page
Back door open/close operation is not carried out with keyfob operation. (The automatic back door system is normal.)	1. Keyfob battery and function check (use Remote Keyless Entry Tester J-43241) **NOTE:** If the result of keyfob function check is OK, keyfob is not malfunctioning.	DLK-234
	2. Key switch (insert) check	DLK-241
	3. Remote keyless entry receiver system inspection	DLK-232
	4. Replace BCM.	BCS-54
Room lamp and ignition keyhole illumination do not operate properly.	1. Room lamp operation check	INL-3
	2. Ignition keyhole illumination operation check	INL-3
	3. Door switch check	DLK-214
	4. Replace BCM.	BCS-54
Panic alarm (horn and headlamp) does not activate when panic alarm button is continuously pressed.	1. Keyfob battery and function check (use Remote Keyless Entry Tester J-43241) **NOTE:** If the result of keyfob function check is OK, keyfob is not malfunctioning.	DLK-234
	2. Key switch (insert) check	DLK-241
	3. Replace BCM.	BCS-54
Auto door lock operation does not activate properly. (All other remote keyless entry functions OK.)	1. Check auto door lock operation mode with CONSULT-III **NOTE:** Auto door lock operation mode can be changed. First check the auto door lock operation mode setting.	DLK-199
	2. Replace BCM.	BCS-54
Keyless power window down (open) operation does not activate properly. (All other remote keyless entry functions OK.)	1. Check power window down operation mode with CONSULT-III **NOTE:** Power window down operation mode can be changed. First check the power window down operation mode setting.	PWC-9
	2. Check power window function with switch	PWC-5
	3. Replace BCM.	BCS-54

HOMELINK UNIVERSAL TRANSCEIVER

Symptom Table

INFOID:0000000001563761

HOMELINK UNIVERSAL TRANSCEIVER MALFUNCTION

Symptom	Diagnosis/service procedure	Reference page
Homelink universal transceiver does not operate properly.	1. Check homelink universal transceiver function.	DLK-257
	2. Check Intermittent Incident.	GI-51

SQUEAK AND RATTLE TROUBLE DIAGNOSES

Work Flow

INFOID:0000000001563762

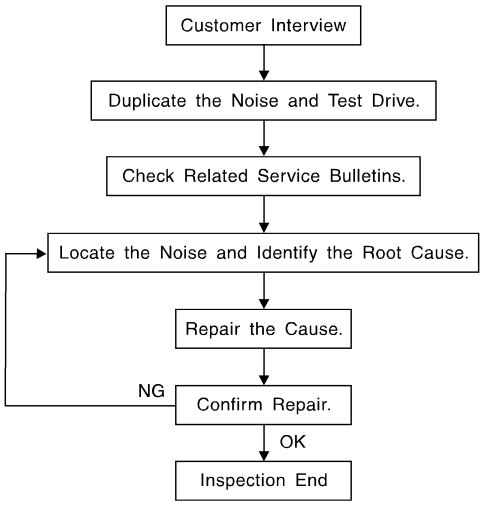

SBT842

CUSTOMER INTERVIEW

Interview the customer if possible, to determine the conditions that exist when the noise occurs. Use the Diagnostic Worksheet during the interview to document the facts and conditions when the noise occurs and any customer's comments; refer to DLK-299, "Diagnostic Worksheet". This information is necessary to duplicate the conditions that exist when the noise occurs.

- The customer may not be able to provide a detailed description or the location of the noise. Attempt to obtain all the facts and conditions that exist when the noise occurs (or does not occur).
- If there is more than one noise in the vehicle, be sure to diagnose and repair the noise that the customer is concerned about. This can be accomplished by test driving the vehicle with the customer.
- After identifying the type of noise, isolate the noise in terms of its characteristics. The noise characteristics are provided so the customer, service adviser and technician are all speaking the same language when defining the noise.
- Squeak —(Like tennis shoes on a clean floor)
  Squeak characteristics include the light contact/fast movement/brought on by road conditions/hard surfaces = higher pitch noise/softer surfaces = lower pitch noises/edge to surface = chirping.
- Creak—(Like walking on an old wooden floor)
  Creak characteristics include firm contact/slow movement/twisting with a rotational movement/pitch dependent on materials/often brought on by activity.
- Rattle—(Like shaking a baby rattle)
  Rattle characteristics include the fast repeated contact/vibration or similar movement/loose parts/missing clip or fastener/incorrect clearance.
- Knock —(Like a knock on a door)
  Knock characteristics include hollow sounding/sometimes repeating/often brought on by driver action.
- Tick—(Like a clock second hand)
  Tick characteristics include gentle contacting of light materials/loose components/can be caused by driver action or road conditions.
- Thump—(Heavy, muffled knock noise)
  Thump characteristics include softer knock/dead sound often brought on by activity.
- Buzz—(Like a bumble bee)
  Buzz characteristics include high frequency rattle/firm contact.
- Often the degree of acceptable noise level will vary depending upon the person. A noise that you may judge as acceptable may be very irritating to the customer.
- Weather conditions, especially humidity and temperature, may have a great effect on noise level.

DUPLICATE THE NOISE AND TEST DRIVE

If possible, drive the vehicle with the customer until the noise is duplicated. Note any additional information on the Diagnostic Worksheet regarding the conditions or location of the noise. This information can be used to duplicate the same conditions when you confirm the repair.

If the noise can be duplicated easily during the test drive, to help identify the source of the noise, try to duplicate the noise with the vehicle stopped by doing one or all of the following:

1) Close a door.
2) Tap or push/pull around the area where the noise appears to be coming from.
3) Rev the engine.
4) Use a floor jack to recreate vehicle “twist”.
5) At idle, apply engine load (electrical load, half-clutch on M/T model, drive position on A/T model).
6) Raise the vehicle on a hoist and hit a tire with a rubber hammer.

- Drive the vehicle and attempt to duplicate the conditions the customer states exist when the noise occurs.
- If it is difficult to duplicate the noise, drive the vehicle slowly on an undulating or rough road to stress the vehicle body.

CHECK RELATED SERVICE BULLETINS

After verifying the customer concern or symptom, check ASIST for Technical Service Bulletins (TSBs) related to that concern or symptom.
If a TSB relates to the symptom, follow the procedure to repair the noise.

LOCATE THE NOISE AND IDENTIFY THE ROOT CAUSE

1. Narrow down the noise to a general area.To help pinpoint the source of the noise, use a listening tool (Chassis Ear: J-39570, Engine Ear: J-39565 and mechanic's stethoscope).
2. Narrow down the noise to a more specific area and identify the cause of the noise by:

- removing the components in the area that you suspect the noise is coming from.
  Do not use too much force when removing clips and fasteners, otherwise clips and fasteners can be broken or lost during the repair, resulting in the creation of new noise.
- tapping or pushing/pulling the component that you suspect is causing the noise.
  Do not tap or push/pull the component with excessive force, otherwise the noise will be eliminated only temporarily.
- feeling for a vibration with your hand by touching the component(s) that you suspect is (are) causing the noise.
- placing a piece of paper between components that you suspect are causing the noise.
- looking for loose components and contact marks.
  Refer to DLK-297, "Generic Squeak and Rattle Troubleshooting".

REPAIR THE CAUSE

- If the cause is a loose component, tighten the component securely.
- If the cause is insufficient clearance between components:
- separate components by repositioning or loosening and retightening the component, if possible.
- insulate components with a suitable insulator such as urethane pads, foam blocks, felt cloth tape or urethane tape. A NISSAN Squeak and Rattle Kit (J-43980) is available through your authorized NISSAN Parts Department.

CAUTION:
Do not use excessive force as many components are constructed of plastic and may be damaged.
Always check with the Parts Department for the latest parts information.
The following materials are contained in the NISSAN Squeak and Rattle Kit (J-43980). Each item can be ordered separately as needed.
URETHANE PADS [1.5 mm (0.059 in) thick]
Insulates connectors, harness, etc.
76268-9E005: 100×135 mm (3.94×5.31 in)/76884-71L01: 60×85 mm (2.36×3.35 in)/76884-71L02: 15×25 mm (0.59×0.98 in)
INSULATOR (Foam blocks)
Insulates components from contact. Can be used to fill space behind a panel.
73982-9E000: 45 mm (1.77 in) thick, 50×50 mm (1.97×1.97 in)/73982-50Y00: 10 mm (0.39 in) thick, 50×50 mm (1.97×1.97 in)
INSULATOR (Light foam block)
80845-71L00: 30 mm (1.18 in) thick, 30×50 mm (1.18×1.97 in)
FELT CLOTH TAPE
Used to insulate where movement does not occur. Ideal for instrument panel applications.
68370-4B000: 15×25 mm (0.59×0.98 in) pad/68239-13E00: 5 mm (0.20 in) wide tape roll. The following materials not found in the kit can also be used to repair squeaks and rattles.
UHMW (TEFLON) TAPE
Insulates where slight movement is present. Ideal for instrument panel applications.

SILICONE GREASE
Used instead of UHMW tape that will be visible or not fit.
Note: Will only last a few months.
SILICONE SPRAY
Use when grease cannot be applied.
DUCT TAPE
Use to eliminate movement.

CONFIRM THE REPAIR

Confirm that the cause of a noise is repaired by test driving the vehicle. Operate the vehicle under the same conditions as when the noise originally occurred. Refer to the notes on the Diagnostic Worksheet.

Generic Squeak and Rattle Troubleshooting

INFOID:0000000001563763

Refer to Table of Contents for specific component removal and installation information.

INSTRUMENT PANEL

Most incidents are caused by contact and movement between:

1. The cluster lid A and instrument panel
2. Acrylic lens and combination meter housing
3. Instrument panel to front pillar garnish
4. Instrument panel to windshield
5. Instrument panel mounting pins
6. Wiring harnesses behind the combination meter
7. A/C defroster duct and duct joint

These incidents can usually be located by tapping or moving the components to duplicate the noise or by pressing on the components while driving to stop the noise. Most of these incidents can be repaired by applying felt cloth tape or silicone spray (in hard to reach areas). Urethane pads can be used to insulate wiring harness.

CAUTION:
Do not use silicone spray to isolate a squeak or rattle. If you saturate the area with silicone, you will not be able to recheck the repair.

CENTER CONSOLE

Components to pay attention to include:

1. Shifter assembly cover to finisher
2. A/C control unit and cluster lid C
3. Wiring harnesses behind audio and A/C control unit

The instrument panel repair and isolation procedures also apply to the center console.

DOORS

Pay attention to the:

1. Finisher and inner panel making a slapping noise
2. Inside handle escutcheon to door finisher
3. Wiring harnesses tapping
4. Door striker out of alignment causing a popping noise on starts and stops

Tapping or moving the components or pressing on them while driving to duplicate the conditions can isolate many of these incidents. You can usually insulate the areas with felt cloth tape or insulator foam blocks from the NISSAN Squeak and Rattle Kit (J-43980) to repair the noise.

TRUNK

Trunk noises are often caused by a loose jack or loose items put into the trunk by the owner.
In addition look for:

1. Trunk lid bumpers out of adjustment
2. Trunk lid striker out of adjustment
3. The trunk lid torsion bars knocking together
4. A loose license plate or bracket

Most of these incidents can be repaired by adjusting, securing or insulating the item(s) or component(s) causing the noise.

SUNROOF/HEADLINING

Noises in the sunroof/headlining area can often be traced to one of the following:

1. Sunroof lid, rail, linkage or seals making a rattle or light knocking noise
2. Sun visor shaft shaking in the holder
3. Front or rear windshield touching headliner and squeaking

Again, pressing on the components to stop the noise while duplicating the conditions can isolate most of these incidents. Repairs usually consist of insulating with felt cloth tape.

OVERHEAD CONSOLE (FRONT AND REAR)

Overhead console noises are often caused by the console panel clips not being engaged correctly. Most of these incidents are repaired by pushing up on the console at the clip locations until the clips engage.
In addition look for:

1. Loose harness or harness connectors.
2. Front console map/reading lamp lense loose.
3. Loose screws at console attachment points.

SEATS

When isolating seat noise it's important to note the position the seat is in and the load placed on the seat when the noise is present. These conditions should be duplicated when verifying and isolating the cause of the noise.
Cause of seat noise include:

1. Headrest rods and holder
2. A squeak between the seat pad cushion and frame
3. The rear seatback lock and bracket

These noises can be isolated by moving or pressing on the suspected components while duplicating the conditions under which the noise occurs. Most of these incidents can be repaired by repositioning the component or applying urethane tape to the contact area.

UNDERHOOD

Some interior noise may be caused by components under the hood or on the engine wall. The noise is then transmitted into the passenger compartment.
Causes of transmitted underhood noise include:

1. Any component mounted to the engine wall
2. Components that pass through the engine wall
3. Engine wall mounts and connectors
4. Loose radiator mounting pins
5. Hood bumpers out of adjustment
6. Hood striker out of adjustment

These noises can be difficult to isolate since they cannot be reached from the interior of the vehicle. The best method is to secure, move or insulate one component at a time and test drive the vehicle. Also, engine RPM or load can be changed to isolate the noise. Repairs can usually be made by moving, adjusting, securing, or insulating the component causing the noise.

Diagnostic Worksheet

INFOID:0000000001563764

Dear Customer:
We are concerned about your satisfaction with your vehicle. Repairing a squeak or rattle sometimes can be very difficult. To help us fix your vehicle right the first time, please take a moment to note the area of the vehicle where the squeak or rattle occurs and under what conditions. You may be asked to take a test drive with a service advisor or technician to ensure we confirm the noise you are hearing.

SQUEAK & RATTLE DIAGNOSTIC WORKSHEET

I. WHERE DOES THE NOISE COME FROM? (circle the area of the vehicle)
The illustrations are for reference only, and may not reflect the actual configuration of your vehicle.

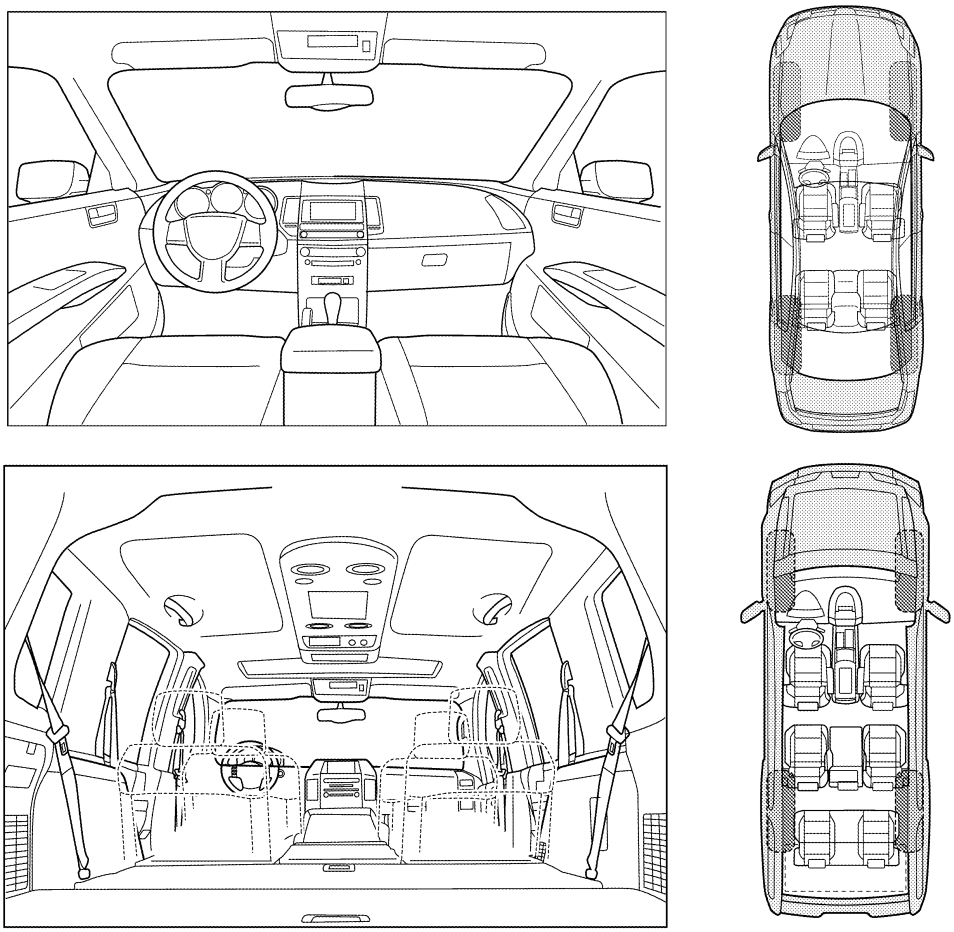

Continue to page 2 of the worksheet and briefly describe the location of the noise or rattle. In addition, please indicate the conditions which are present when the noise occurs.

-1-

LAIA0072E

SQUEAK & RATTLE DIAGNOSTIC WORKSHEET - page 2

Briefly describe the location where the noise occurs:

_____

_____

II. WHEN DOES IT OCCUR? (please check the boxes that apply)

- ☐ Anytime
- ☐ 1st time in the morning
- ☐ Only when it is cold outside
- ☐ Only when it is hot outside
- ☐ After sitting out in the rain
- ☐ When it is raining or wet
- ☐ Dry or dusty conditions
- ☐ Other:

III. WHEN DRIVING:

- ☐ Through driveways
- ☐ Over rough roads
- ☐ Over speed bumps
- ☐ Only about ____ mph
- ☐ On acceleration
- ☐ Coming to a stop
- ☐ On turns: left, right or either (circle)
- ☐ With passengers or cargo
- ☐ Other: _____
- ☐ After driving _____ miles or _____ minutes

IV. WHAT TYPE OF NOISE

- ☐ Squeak (like tennis shoes on a clean floor)
- ☐ Creak (like walking on an old wooden floor)
- ☐ Rattle (like shaking a baby rattle)
- ☐ Knock (like a knock at the door)
- ☐ Tick (like a clock second hand)
- ☐ Thump (heavy muffled knock noise)
- ☐ Buzz (like a bumble bee)

TO BE COMPLETED BY DEALERSHIP PERSONNEL

Test Drive Notes:

_____

_____

_____

	YES	NO	Initials of person performing
Vehicle test driven with customer	☐	☐	_____
- Noise verified on test drive	☐	☐	_____
- Noise source located and repaired	☐	☐	_____
- Follow up test drive performed to confirm repair	☐	☐	_____

VIN: _____ Customer Name _____

W.O.# _____ Date: _____

This form must be attached to Work Order

LAIA0071E

PRECAUTION

PRECAUTIONS

Precaution for Supplemental Restraint System (SRS) "AIR BAG" and "SEAT BELT PRE-TENSIONER"

INFOID:0000000001563765

The Supplemental Restraint System such as “AIR BAG” and “SEAT BELT PRE-TENSIONER”, used along with a front seat belt, helps to reduce the risk or severity of injury to the driver and front passenger for certain types of collision. This system includes seat belt switch inputs and dual stage front air bag modules. The SRS system uses the seat belt switches to determine the front air bag deployment, and may only deploy one front air bag, depending on the severity of a collision and whether the front occupants are belted or unbelted.
Information necessary to service the system safely is included in the SR and SB section of this Service Manual.

WARNING:

- **To avoid rendering the SRS inoperative, which could increase the risk of personal injury or death in the event of a collision which would result in air bag inflation, all maintenance must be performed by an authorized NISSAN/INFINITI dealer.**
- **Improper maintenance, including incorrect removal and installation of the SRS, can lead to personal injury caused by unintentional activation of the system. For removal of Spiral Cable and Air Bag Module, see the SR section.**
- **Do not use electrical test equipment on any circuit related to the SRS unless instructed to in this Service Manual. SRS wiring harnesses can be identified by yellow and/or orange harnesses or harness connectors.**

Precaution for work

INFOID:0000000001563766

- After removing and installing the opening/closing parts, be sure to carry out fitting adjustments to check their operation.
- Check the lubrication level, damage, and wear of each part. If necessary, grease or replace it.

PREPARATION

PREPARATION

Special Service Tool

INFOID:0000000001563767

The actual shapes of Kent-Moore tools may differ from those of special service tools illustrated here.

Tool number (Kent-Moore No.) Tool name	Description
— (J-39570) Chassis ear 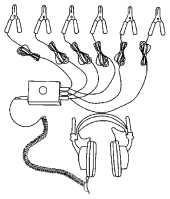 SIIA0993E	Locating the noise
— (J-43980) NISSAN Squeak and Rattle Kit 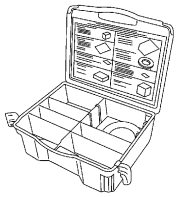 SIIA0994E	Repairing the cause of noise
— (J-43241) Remote Keyless Entry Tester 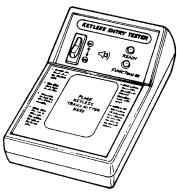 LEL946A	Used to test keyfobs

Commercial Service Tool

INFOID:0000000001563768

(Kent-Moore No.) Tool name	Description
(J-39565) Engine ear 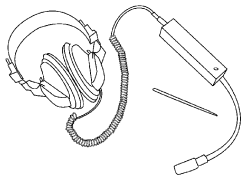 SIIA0995E	Locating the noise

ON-VEHICLE REPAIR

HOOD

Fitting Adjustment

INFOID:0000000001563794

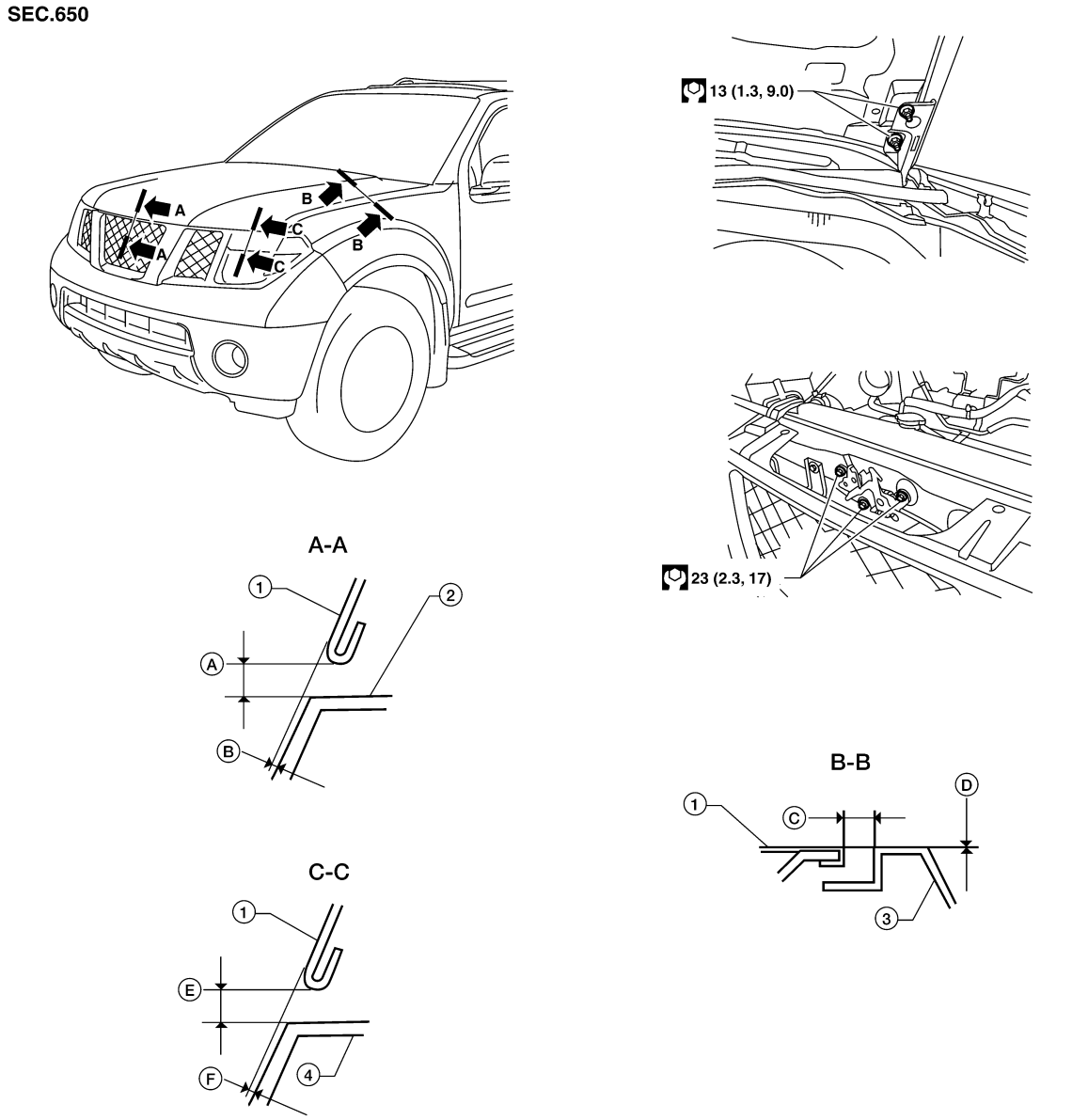

1.	Hood	2.	Front grille	3.	Front fender
4.	Headlamp assembly	A.	6.0 mm (0.24 in)	B.	0.7 mm (0.03 in)
C.	4.5 mm (0.18 in)	D.	0.0 mm (0.0 in)	E.	6.0 mm (0.24 in)
F.	0.7 mm (0.03 in)				

CLEARANCE AND SURFACE HEIGHT ADJUSTMENT

1. Remove the front grille. Refer to EXT-16, "Removal and Installation".
2. Loosen the hood lock assembly and adjust the rubber bumpers until the surface height of the hood becomes 1 mm (0.04 in) lower than the fender.
3. Engage the hood striker and temporarily tighten.
4. Check the lock and striker for looseness.

5. Tighten the bolts to specification.
6. Adjust the surface height of the hood according to the fitting standard dimension by rotating right and left rubber bumpers.
7. Install the front grille. Refer to EXT-16, "Removal and Installation".

HOOD LOCK ADJUSTMENT

1. Remove the front grille. Refer to EXT-16, "Removal and Installation".
2. Move the hood lock to the left or right so that striker center is vertically aligned with hood lock center (when viewed from vehicle front).
3. Make sure the secondary latch is properly engaged with the secondary striker with hood's own weight by dropping it from approx. 200 mm (7.87 in) height or by pressing it lightly approx. 3 kg (29 N, 7lb).
   CAUTION:
   Do not drop the hood from 300 mm (11.81 in) height or higher.

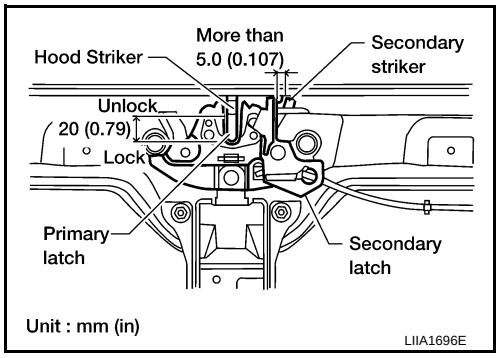

4. After adjusting hood lock, tighten the lock bolts to the specified torque.

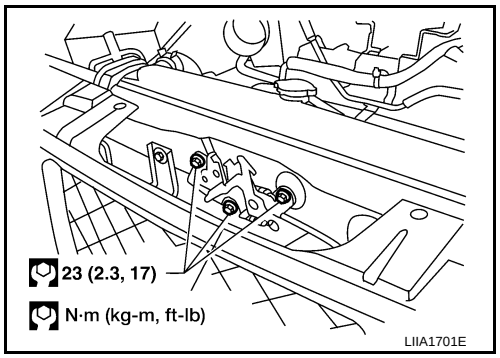

5. Install the front grille. Refer to EXT-16, "Removal and Installation".

Removal and Installation of Hood Assembly

INFOID:0000000001563795

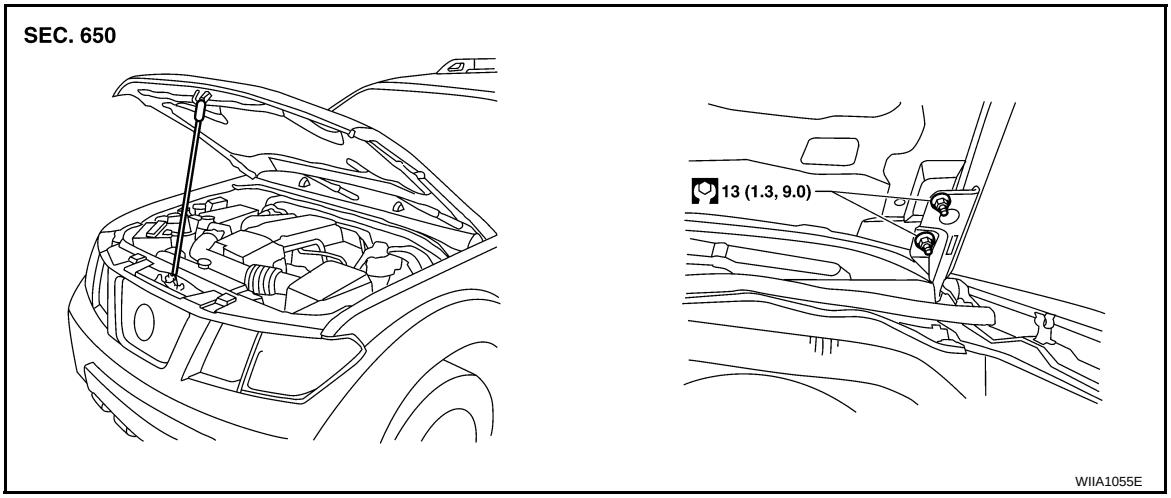

1. Support the hood striker with suitable tool to prevent it from falling.
2. Remove the hinge nuts from the hood to remove the hood assembly.

CAUTION:
Operate with two workers, because of its heavy weight.
Installation is in the reverse order of removal.

Removal and Installation of Hood Lock Control

INFOID:0000000001563796

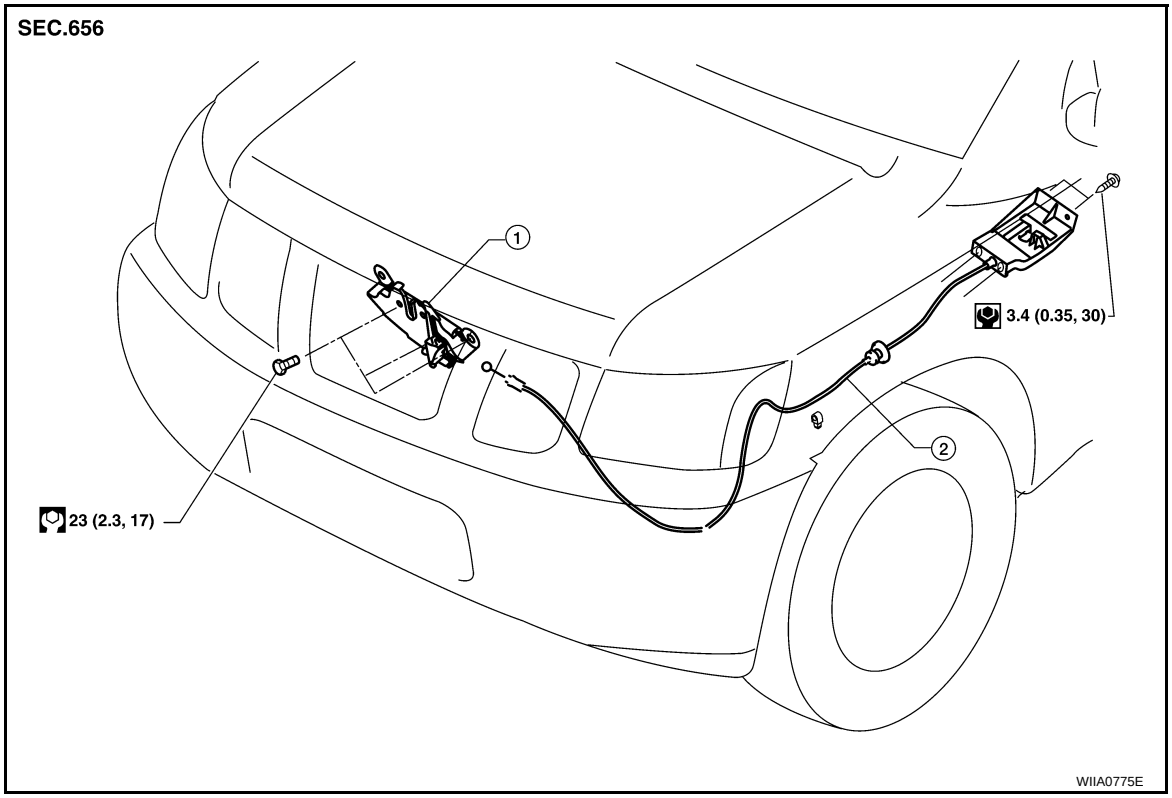

1. Hood lock assembly
2. Hood lock cable

REMOVAL

1. Remove the front grille. Refer to EXT-16, "Removal and Installation".
2. Remove the front fender protector (LH). Refer to EXT-20, "Removal and Installation of Front Fender Protector".
3. Disconnect the hood lock cable from the hood lock, and unclip it from the radiator core support upper and hoodledge.
4. Remove the bolts, and the hood release handle.
5. Separate the grommet from the lower dash panel. Pull the hood lock cable out through the passenger compartment.
   CAUTION:
   While pulling, be careful not to damage the outside of the hood lock cable.

INSTALLATION

1. Pull the hood lock cable through the lower dash panel hole into the engine room.

Be careful not to bend the cable too much, keep the radius 100mm (3.94 in) or more.

2. Make sure the cable is not offset from the grommet, and push the grommet into the lower dash panel hole securely.
3. Apply sealant around the grommet at * mark.

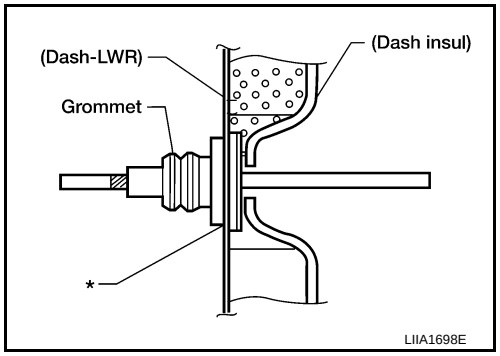

4. Install the cable securely to the lock.
5. Adjust the hood lock. Refer to DLK-307, "Hood Lock Control Inspection".

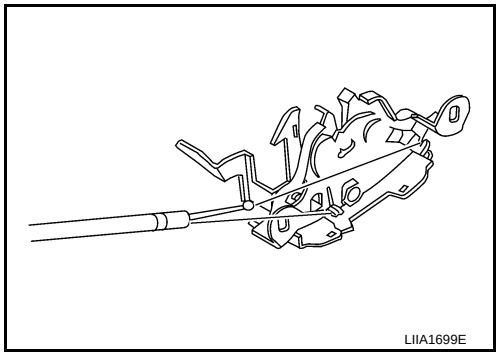

6. Install the front grille. Refer to EXT-16, "Removal and Installation".

Hood Lock Control Inspection

INFOID:0000000001563797

CAUTION:
If the hood lock cable is bent or deformed, replace it.

1. Remove the front grille. Refer to EXT-16, "Removal and Installation".
2. Make sure the secondary latch is properly engaged with the secondary striker with hood's own weight by dropping it from approx. 200 mm (7.87 in) height.
3. While operating the hood opener, carefully make sure the front end of the hood is raised by approx. 20 mm (0.79 in). Also make sure the hood opener returns to the original position.

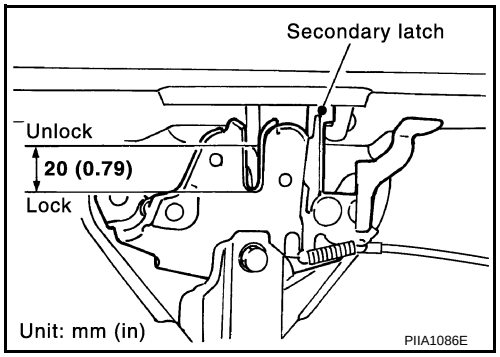

4. Check the hood lock lubrication condition. If necessary, apply “body grease” to the points shown.

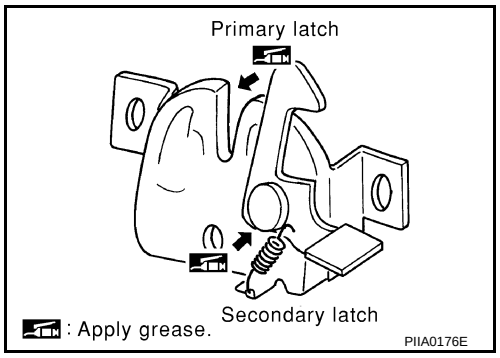

5. Install the front grille. Refer to EXT-16, "Removal and Installation".

DOOR

Fitting Adjustment

INFOID:0000000001563861

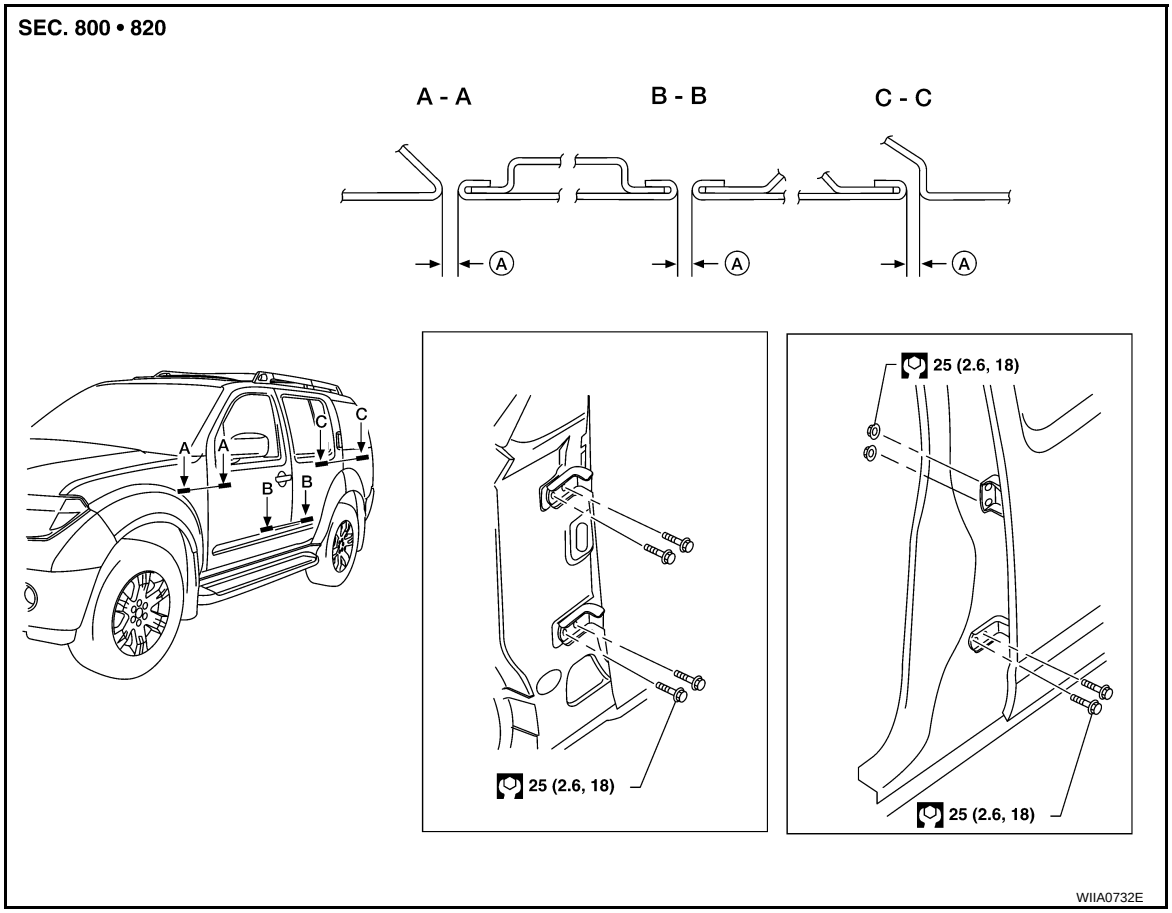

A. 4.5 ± 1.0 mm (0.177 ± 0.039 in)

Front door

Longitudinal clearance and surface height adjustment at front end

1. Remove the fender. Refer to EXT-18, "Removal and Installation".
2. Loosen the hinge bolts. Raise or lower the front door at rear end to adjust.
3. Install the fender. Refer to EXT-18, "Removal and Installation".

Rear door

Longitudinal clearance and surface height adjustment at front end

1. Remove the center pillar upper finisher. Refer to INT-13, "Removal and Installation".
2. Loosen the lower hinge bolts.
3. From inside the vehicle, loosen the upper hinge nuts. Open the door, and raise or lower the rear end of the door to adjust.
4. Install the center pillar lower finisher. Refer to INT-13, "Removal and Installation".

Back door

Longitudinal clearance and surface height adjustment

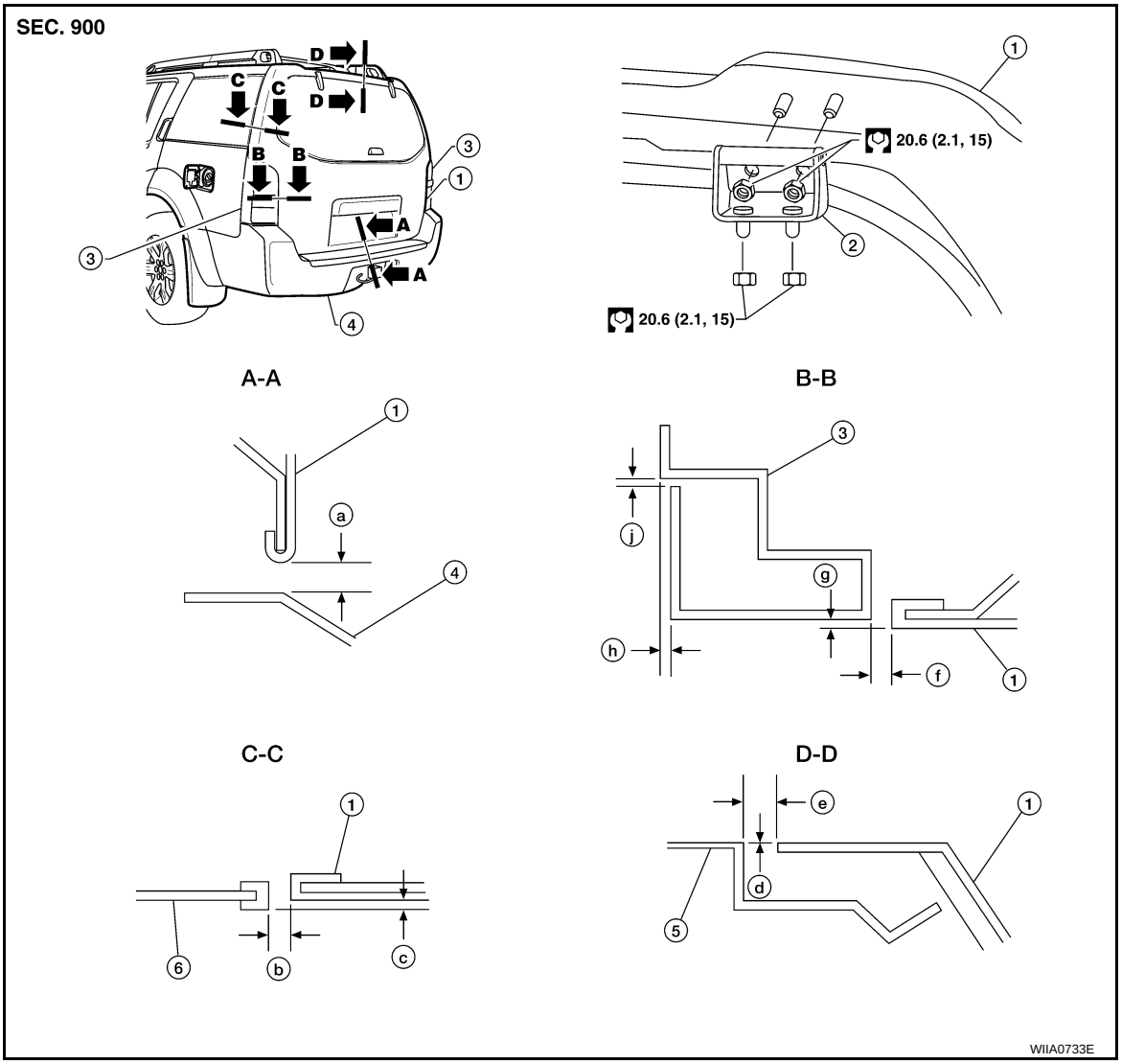

1.	Back door assembly	2.	Back door hinge	3.	Tail lamp assembly
4.	Rear bumper fascia	5.	Roof	6.	Side window glass
a.	7.2 ± 2.0 mm (0.28 ± 0.06 in)	b.	6.0 ± 1.5 mm (0.24 ± 0.06 in)	c.	2.0 ± 2.0 mm (0.08 ± 0.08 in)
d.	1.0 ± 1.5 mm (0.04 ± 0.06 in)	e.	8.0 ± 1.5 mm (0.31 ± 0.06 in)	f.	5.3 ± 2.0 mm (0.21 ± 0.08 in)
g.	0.8 ± 2.0 mm (0.03 ± 0.08 in)	h.	0.8 ± 1.0 mm (0.03 ± 0.04 in)	j.	2.0 ± 1.0 mm (0.08 ± 0.04 in)

1. Open and support the back door.
2. Slightly loosen the hinge nuts.
3. Reposition the door as necessary and tighten the nuts.
4. Confirm the adjustment. Repeat as necessary to obtain the desired fit.

Striker adjustment

BODY SIDE DOORS

1. Adjust the striker so that it becomes parallel with the lock insertion direction.

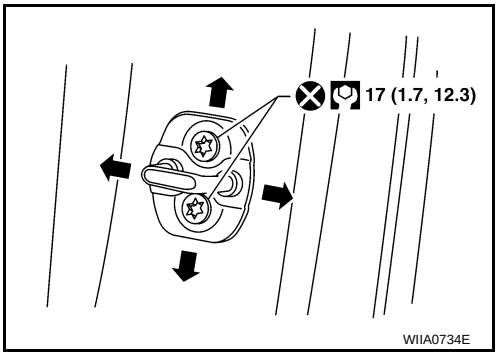

BACK DOOR

1. Adjust the striker so that it becomes parallel with the lock insertion direction.

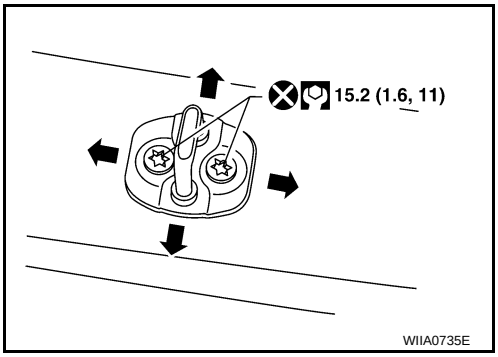

Removal and Installation

INFOID:0000000001563862

FRONT DOOR

CAUTION:

- **When removing and installing the door assembly, support the door with a jack and shop cloth to protect the door and body.**
- **When removing and installing door assembly, be sure to carry out the fitting adjustment.**
- **Check the hinge rotating part for poor lubrication. If necessary, apply "body grease".**

1. Remove the front door glass and regulator. Refer to GW-14, "Front Door Glass Regulator".
2. Remove the door harness.
3. Remove the check link bolt from the hinge pillar.

Check link to hinge pillar bolt	**14.7 N·m (1.5 kg-m, 11 ft-lb)**

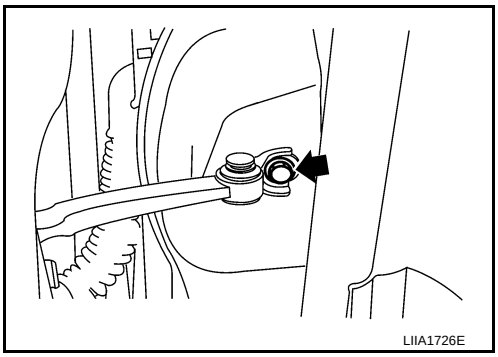

4. Remove the door-side hinge nuts, and the door assembly.

Door hinge nuts	**24.5 N·m (2.5 kg-m, 18 ft-lb)**

Installation is in the reverse order of removal.

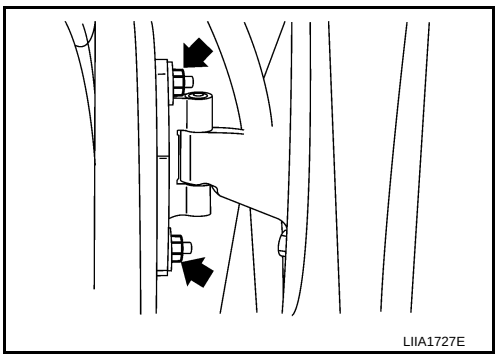

REAR DOOR

1. Remove the door finisher. Refer to INT-10, "Removal and Installation".
2. Remove the inner seal.
3. Remove the rear door glass and regulator. Refer to GW-18, "Rear Door Glass Regulator".
4. Remove the door harness.
5. Remove the check link bolt from the hinge pillar.

Check link to hinge pillar bolt	**14.7 N·m (1.5 kg-m, 11 ft-lb)**

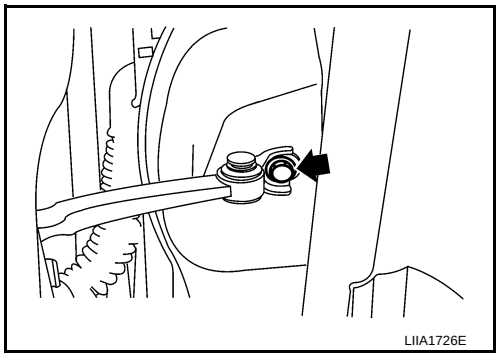

6. Remove the door-side hinge nuts, and remove the door assembly.

Door hinge nuts	**24.5 N·m (2.5 kg-m, 18 ft-lb)**

Installation is in the reverse order of removal.

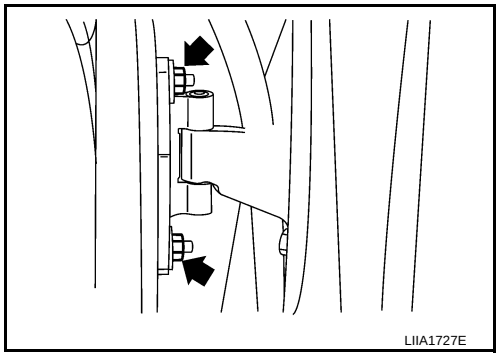

BACK DOOR

1. Remove the glass hatch. Refer to GW-23, "Removal and Installation".
2. Remove the license lamp finisher. Refer to EXT-19, "Removal and Installation".
3. Remove the back door lock assembly. Refer to DLK-317, "Component Structure".
4. Remove the back door wire harness.
5. Remove the rear washer nozzle and hose from the back door. Refer to WW-54, "Removal and Installation"

CAUTION:
Two technicians should be used to avoid damaging the back door during removal.

6. Support the back door.
7. Remove the back door stays.

8. Remove the door side nuts and the back door assembly.

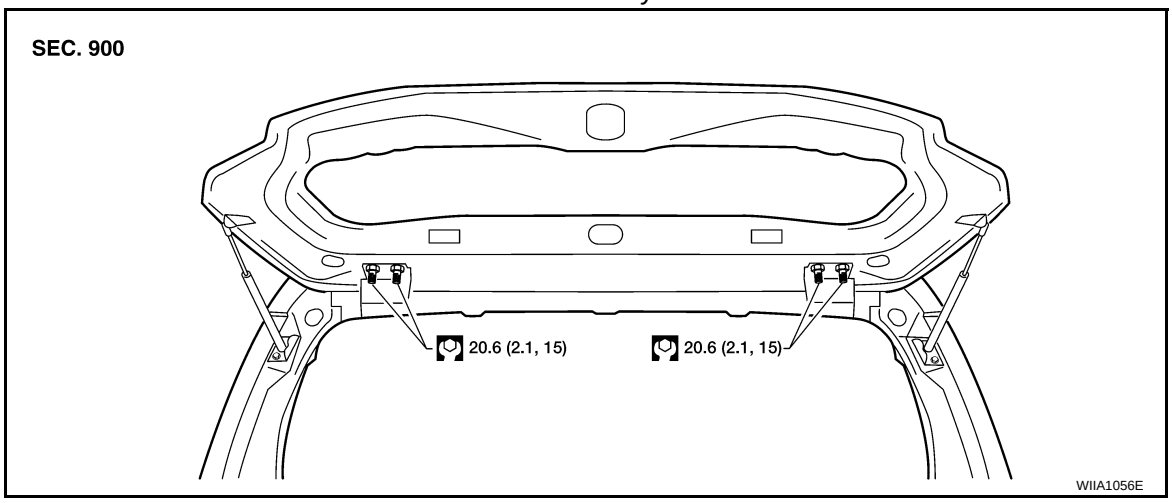

Installation is in the reverse order of removal.

- Align the back door. Refer to DLK-308, "Fitting Adjustment".

FRONT DOOR LOCK

Component Structure

INFOID:0000000001563863

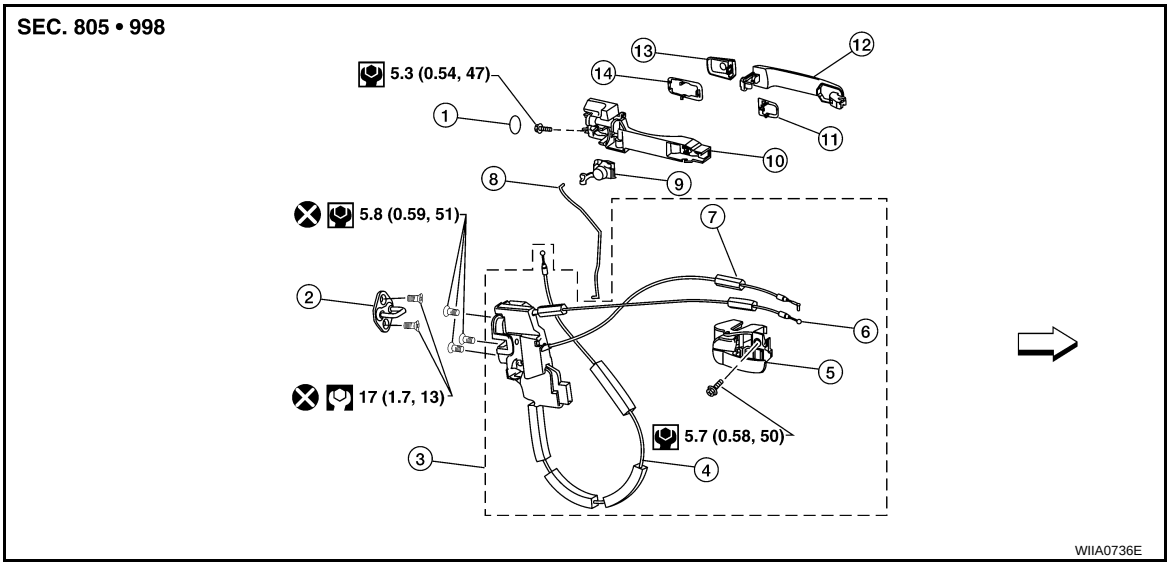

1.	Grommet	2.	Front door striker	3.	Door lock assembly
4.	Outside handle cable	5.	Inside handle assembly	6.	Inside handle cable
7.	Door lock cable	8.	Key cylinder rod (Driver side only)	9.	Door key cylinder
10.	Outside handle bracket	11.	Front gasket	12.	Outside handle
13.	Door key cylinder assembly (Driver side) Outside handle escutcheon (Passenger side)	14.	Rear gasket	⇐	Vehicle front

Removal and Installation

INFOID:0000000001586943

REMOVAL

1. Remove the front door window regulator. Refer to GW-14, "Front Door Glass Regulator".
2. Remove door side grommet, and remove door key cylinder assembly (driver side) or outside handle escutcheon (passenger side) bolts (TORX T30) from grommet hole.

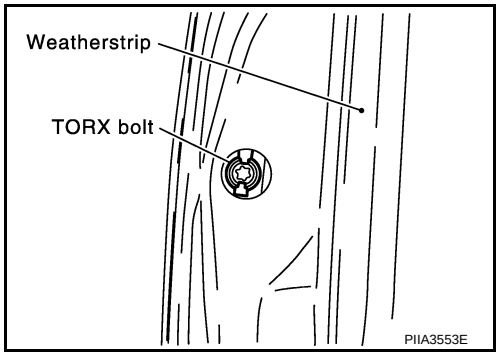

3. While pulling the outside handle (1), remove door key cylinder assembly or escutcheon (2).

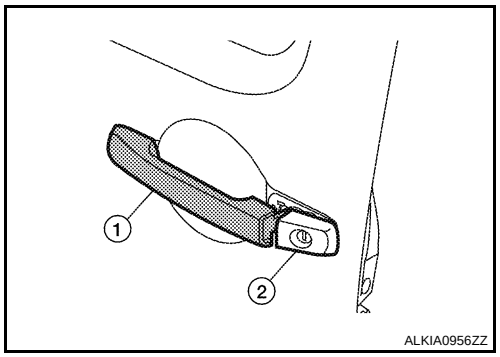

4. If equipped, separate the door key cylinder rod from the door key cylinder assembly.
5. While pulling outside handle (1), slide toward rear of vehicle (2) to remove outside handle.

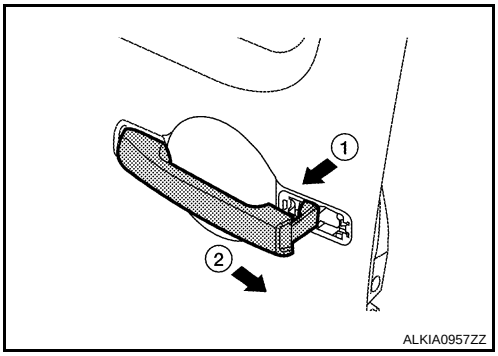

6. Remove the front gasket (1) and rear gasket (2).

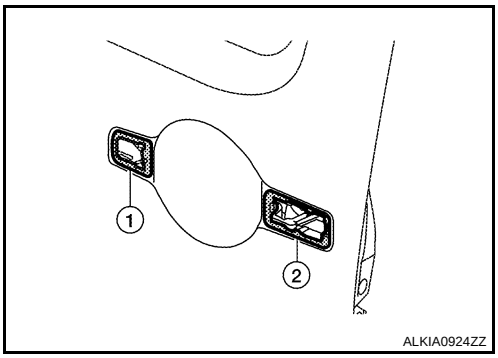

7. Remove the TORX bolts (T30), remove the door lock assembly.

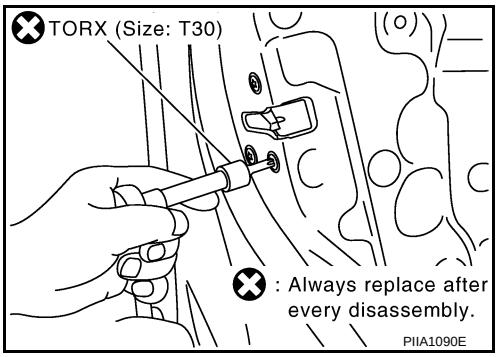

8. While pulling outside handle bracket, slide toward rear of vehicle to remove outside handle bracket and door lock assembly as shown.

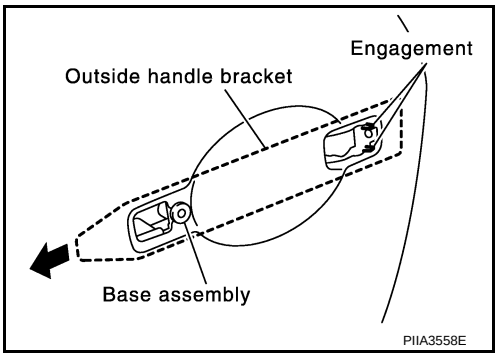

9. Disconnect the door lock actuator electrical connector.

10. Separate the outside handle cable connection from the outside handle bracket.

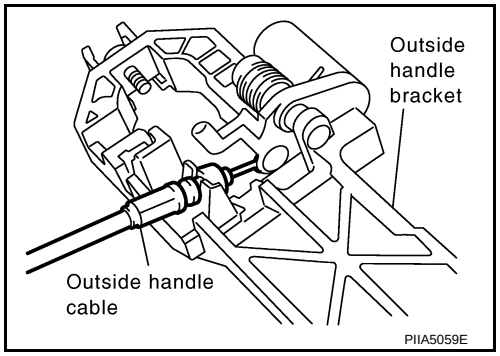

INSTALLATION

Installation is in the reverse order of removal.

CAUTION:

To install the key cylinder rod, be sure to rotate the key cylinder rod holder until a click is felt.

Disassembly and Assembly

INFOID:0000000001563865

DOOR KEY CYLINDER ASSEMBLY

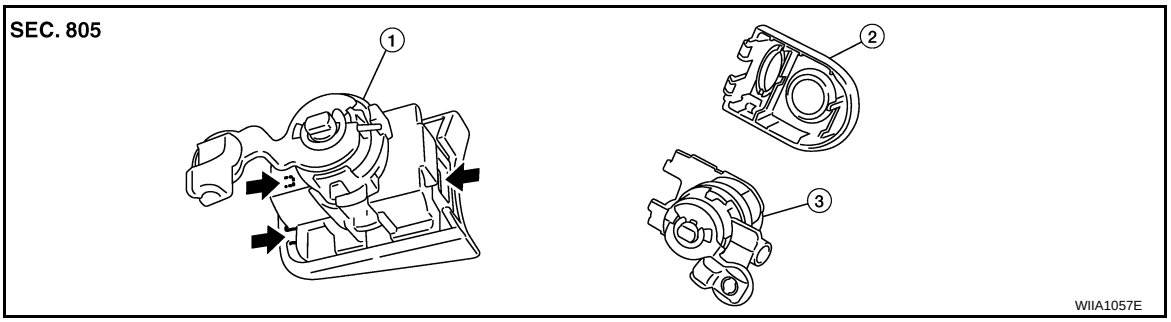

1. Door key cylinder assembly
2. Door key cylinder escutcheon
3. Door key cylinder

⇐ Pawl

Release the key cylinder escutcheon pawls to remove the door key cylinder.

REAR DOOR LOCK

Component Structure

INFOID:0000000001563866

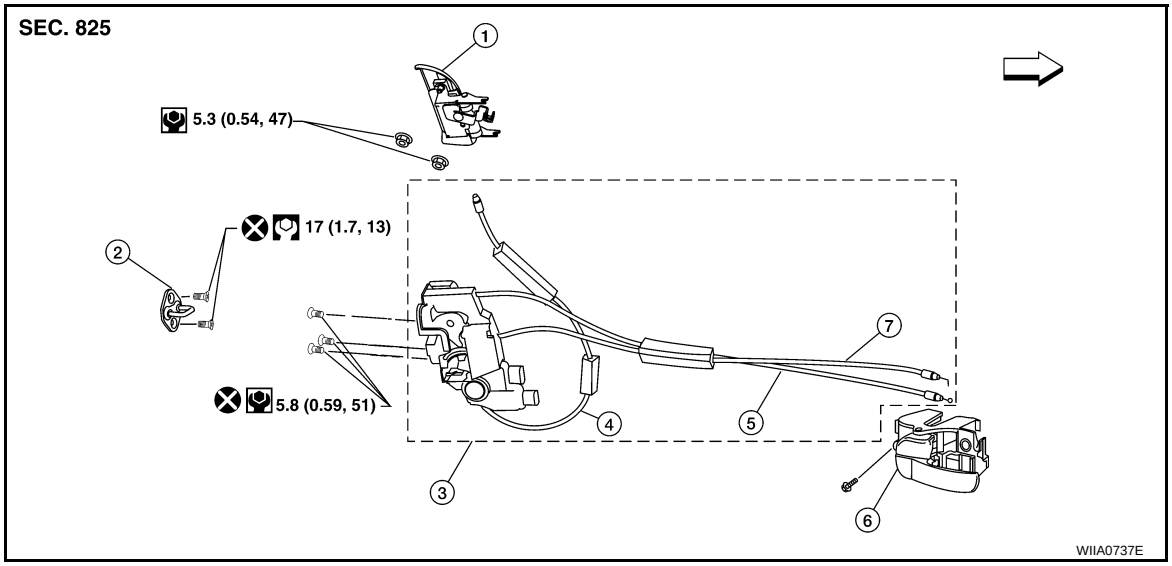

1.	Outside door handle	2.	Rear door striker	3.	Rear door lock assembly
4.	Outside door handle cable	5.	Inside door handle cable	6.	Inside door handle assembly
7.	Door lock cable	⇐	Vehicle front		

Removal and Installation

INFOID:0000000001563867

REMOVAL

1. Remove the rear door window regulator. Refer to GW-18, "Rear Door Glass Regulator".
2. Remove door grommets, and remove outside handle nuts from the hole.
3. Remove outside handle.
4. Disconnect the outside handle cable connection.
5. Remove the inside door handle.
6. Disconnect the door lock and inside door handle cables from the inside door handle.
7. Disconnect the door lock actuator connector and remove the assembly.

INSTALLATION

Installation is in the reverse order of removal.

BACK DOOR LOCK

Component Structure

INFOID:0000000001563868

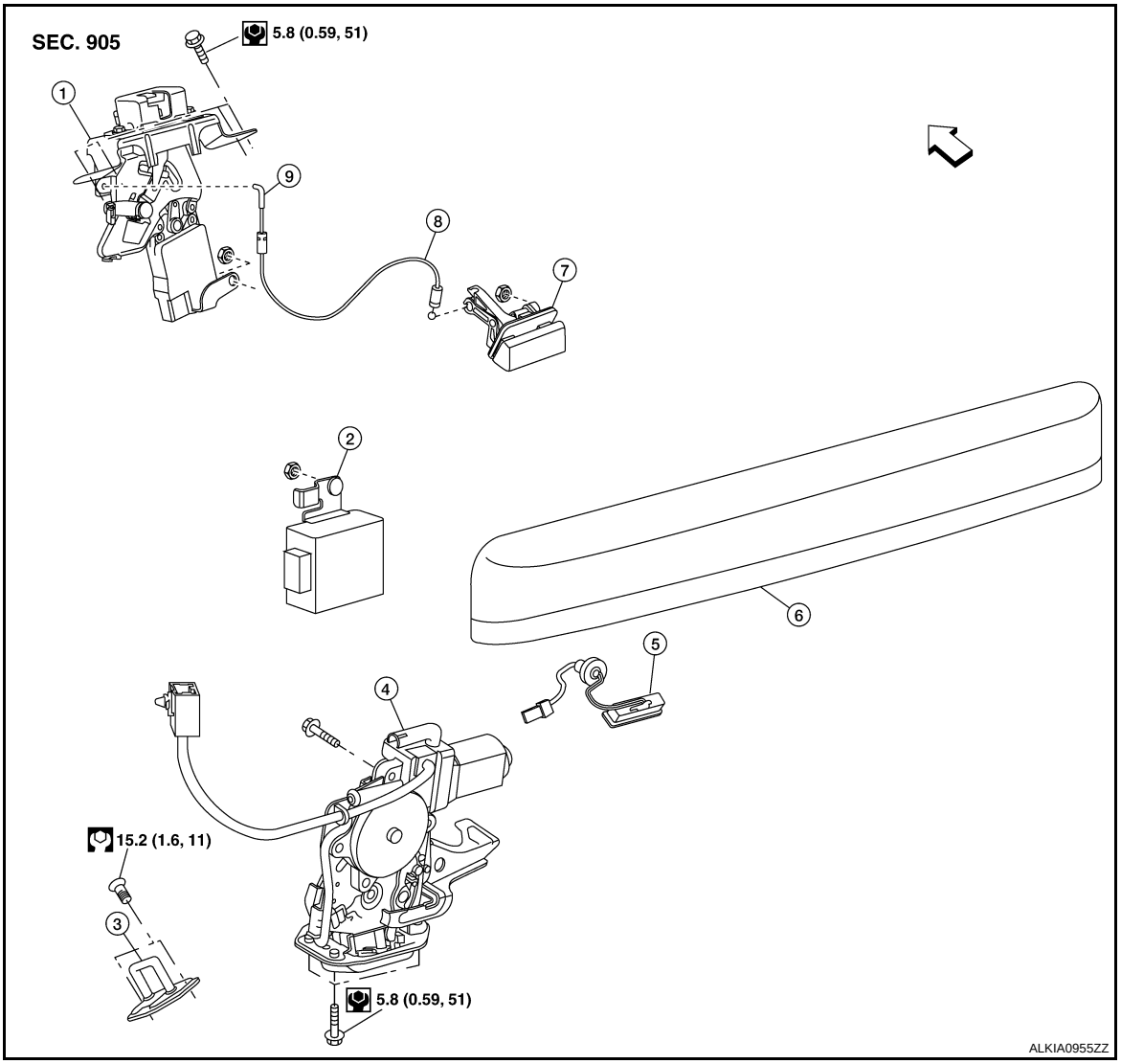

1.	Glass hatch latch assembly	2.	Back door control assembly	3.	Back door striker
4.	Back door latch assembly	5.	Back door release button	6.	Back door finisher
7.	Glass hatch release handle	8.	Glass latch release cable	⇐	Vehicle front