SECTION SE

SEAT

CONTENTS

PRECAUTIONS 3
Precautions for Supplemental Restraint System (SRS) “AIR BAG” and “SEAT BELT PRE-TENSIONER” 3
Precautions for Work 3
PREPARATION 4
Special Service Tool 4
Commercial Service Tool 4
SQUEAK AND RATTLE TROUBLE DIAGNOSES..... 5
Work Flow 5
CUSTOMER INTERVIEW 5
DUPLICATE THE NOISE AND TEST DRIVE 6
CHECK RELATED SERVICE BULLETINS 6
LOCATE THE NOISE AND IDENTIFY THE ROOT CAUSE 6
REPAIR THE CAUSE 6
CONFIRM THE REPAIR 7
Generic Squeak and Rattle Troubleshooting 7
INSTRUMENT PANEL 7
CENTER CONSOLE 7
DOORS 7
TRUNK 8
SUNROOF/HEADLINING 8
OVERHEAD CONSOLE (FRONT AND REAR)..... 8
SEATS 8
UNDERHOOD 8
Diagnostic Worksheet 9
AUTOMATIC DRIVE POSITIONER 11
Component Parts and Harness Connector Location..... 11
System Description 12
OPERATIVE CONDITION 12
SYSTEM DESCRIPTION 13
Schematic 17
Wiring Diagram — AUT/DP — 19
EARLY PRODUCTION 20
LATE PRODUCTION 21
Terminals and Reference Values for Driver Seat Control Unit 29
Terminals and Reference Values for Automatic Drive Positioner Control Unit 31
Terminals and Reference Values for BCM 32
Trouble Diagnosis 33
WORK FLOW 33
PRELIMINARY CHECK 33
CONSULT-II FUNCTION (AUTO DRIVE POS.)... 36
CAN COMMUNICATION INSPECTION USING CONSULT-II (SELF-DIAGNOSIS) 40
SYMPTOM CHART 41
SEAT SENSOR POWER SUPPLY AND GROUND INSPECTION 42
SLIDING MOTOR CIRCUIT INSPECTION 43
RECLINING MOTOR CIRCUIT INSPECTION ... 44
FRONT LIFTER MOTOR CIRCUIT INSPECTION 46
REAR LIFTING MOTOR CIRCUIT INSPECTION.. 47
MIRROR MOTOR LH CIRCUIT INSPECTION ... 49
MIRROR MOTOR RH CIRCUIT INSPECTION... 50
TELESCOPIC CIRCUIT INSPECTION 52
TILT CIRCUIT INSPECTION 53
SLIDING SENSOR CIRCUIT INSPECTION 55
RECLINING SENSOR CIRCUIT INSPECTION... 56
FRONT LIFTING SENSOR CIRCUIT INSPECTION 57
REAR LIFTING SENSOR CIRCUIT INSPECTION 58
MIRROR SENSOR LH CIRCUIT INSPECTION.. 59
MIRROR SENSOR RH CIRCUIT INSPECTION.. 61
A/T DEVICE (DETENT SWITCH) CIRCUIT INSPECTION (A/T MODEL ONLY) 62
PARKING BRAKE SWITCH CIRCUIT (M/T MODEL ONLY) 63
TELESCOPIC SENSOR CIRCUIT INSPECTION ... 65
TILT SENSOR CIRCUIT INSPECTION 66
KEY SWITCH AND KEY LOCK SOLENOID CIRCUIT INSPECTION 67
FRONT DOOR SWITCH LH CIRCUIT INSPECTION 69
SEAT MEMORY SWITCH CIRCUIT INSPEC-

TION 70
SLIDING SWITCH CIRCUIT INSPECTION 72
RECLINING SWITCH INSPECTION 73
FRONT LIFTING SWITCH CIRCUIT INSPECTION 75
REAR LIFTING SWITCH CIRCUIT INSPECTION 76
POWER SEAT SWITCH GROUND INSPECTION 77
DOOR MIRROR REMOTE CONTROL SWITCH (CHANGEOVER SWITCH) CIRCUIT CHECK (EARLY PRODUCTION) 78
DOOR MIRROR REMOTE CONTROL SWITCH (MIRROR SWITCH) CIRCUIT CHECK (EARLY PRODUCTION) 80
DOOR MIRROR REMOTE CONTROL SWITCH GROUND CIRCUIT CHECK (EARLY PRODUCTION) 82
DOOR MIRROR REMOTE CONTROL SWITCH (CHANGEOVER SWITCH) CIRCUIT CHECK (LATE PRODUCTION) 83
DOOR MIRROR REMOTE CONTROL SWITCH (MIRROR SWITCH) CIRCUIT CHECK (LATE PRODUCTION) 85
DOOR MIRROR REMOTE CONTROL SWITCH GROUND CIRCUIT CHECK (LATE PRODUCTION) 87
ADP STEERING TELESCOPIC SWITCH CIRCUIT INSPECTION 88
ADP STEERING TILT SWITCH CIRCUIT INSPECTION 90
SEAT MEMORY INDICATOR LAMP CIRCUIT INSPECTION 91
UART COMUNICATION LINE CIRCUIT INSPECTION 93
POWER SEAT 95
Schematic 95
Wiring Diagram–SEAT– 96
HEATED SEAT 99
Description 99
Schematic 100
WITH FRONT LEFT AND RIGHT HEATED SEATS 100
WITH FRONT AND REAR HEATED SEATS 101
Wiring Diagram — HSEAT — 102
WITH FRONT LEFT AND RIGHT HEATED SEATS 102
WITH FRONT AND REAR HEATED SEATS 105
FRONT SEAT 110
Removal and Installation 110
REMOVAL 113
INSTALLATION 113
REMOVAL OF SEATBACK ASSEMBLY 113
INSTALLATION OF SEATBACK ASSEMBLY 114
SEAT CUSHION TRIM AND PAD (DRIVER) OR SEAT CUSHION ASSEMBLY (PASSENGER) 114
REAR SEAT 115
Removal and Installation 115
REMOVAL 115
INSTALLATION 115
Disassembly and Assembly 116

PRECAUTIONS

PFP:00001

Precautions for Supplemental Restraint System (SRS) “AIR BAG” and “SEAT BELT PRE-TENSIONER”

EIS003X0

The Supplemental Restraint System such as “AIR BAG” and “SEAT BELT PRE-TENSIONER”, used along with a front seat belt, helps to reduce the risk or severity of injury to the driver and front passenger for certain types of collision. This system includes seat belt switch inputs and dual stage front air bag modules. The SRS system uses the seat belt switches to determine the front air bag deployment, and may only deploy one front air bag, depending on the severity of a collision and whether the front occupants are belted or unbelted.
Information necessary to service the system safely is included in the SRS and SB section of this Service Manual.

WARNING:

- **To avoid rendering the SRS inoperative, which could increase the risk of personal injury or death in the event of a collision which would result in air bag inflation, all maintenance must be performed by an authorized NISSAN/INFINITI dealer.**
- **Improper maintenance, including incorrect removal and installation of the SRS, can lead to personal injury caused by unintentional activation of the system. For removal of Spiral Cable and Air Bag Module, see the SRS section.**
- **Do not use electrical test equipment on any circuit related to the SRS unless instructed to in this Service Manual. SRS wiring harnesses can be identified by yellow and/or orange harnesses or harness connectors.**

Precautions for Work

EIS003X1

- When removing or disassembling each component, be careful not to damage or deform it. If a component may be subject to interference, be sure to protect it with a shop cloth.
- When removing (disengaging) components with a screwdriver or similar tool, be sure to wrap the component with a shop cloth or vinyl tape to protect it.
- Protect the removed parts with a shop cloth and keep them.
- Replace a deformed or damaged clip.
- If a part is specified as a non-reusable part, always replace it with new one.
- Be sure to tighten bolts and nuts securely to the specified torque.
- After re-installation is completed, be sure to check that each part works normally.
- Follow the steps below to clean components.
  - Water soluble foul: Dip a soft cloth into lukewarm water, and wring the water out of the cloth to wipe the fouled area.
    Then rub with a soft and dry cloth.
  - Oily foul: Dip a soft cloth into lukewarm water with mild detergent (concentration: within 2 to 3%), and wipe the fouled area.
    Then dip a cloth into fresh water, and wring the water out of the cloth to wipe the detergent off. Then rub with a soft and dry cloth.
- Do not use organic solvent such as thinner, benzene, alcohol, or gasoline.
- For genuine leather seats, use a genuine leather seat cleaner.

PREPARATION

PFP:00002

Special Service Tool

EIS003X2

The actual shapes of Kent-Moore tools may differ from those of special service tools illustrated here.

Tool number (Kent-Moore No.) Tool name	Description
— (J-39570) Chassis ear 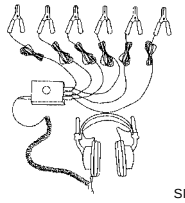 SIIA0993E	Locating the noise
— (J-43980) NISSAN Squeak and Rattle Kit  SIIA0994E	Repairing the cause of noise

Commercial Service Tool

EIS003X3

(Kent-Moore No.) Tool name	Description
(J-39565) Engine ear 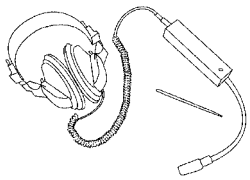 SIIA0995E	Locating the noise

SQUEAK AND RATTLE TROUBLE DIAGNOSES

PFP:00000

Work Flow

EIS0046X

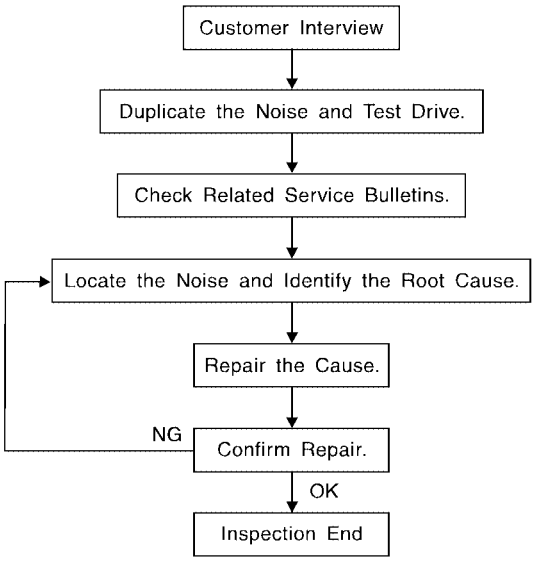

SBT842

CUSTOMER INTERVIEW

Interview the customer if possible, to determine the conditions that exist when the noise occurs. Use the Diagnostic Worksheet during the interview to document the facts and conditions when the noise occurs and any customer's comments; refer to SE-9, "Diagnostic Worksheet" . This information is necessary to duplicate the conditions that exist when the noise occurs.

- The customer may not be able to provide a detailed description or the location of the noise. Attempt to obtain all the facts and conditions that exist when the noise occurs (or does not occur).
- If there is more than one noise in the vehicle, be sure to diagnose and repair the noise that the customer is concerned about. This can be accomplished by test driving the vehicle with the customer.
- After identifying the type of noise, isolate the noise in terms of its characteristics. The noise characteristics are provided so the customer, service adviser and technician are all speaking the same language when defining the noise.
- Squeak —(Like tennis shoes on a clean floor)
  Squeak characteristics include the light contact/fast movement/brought on by road conditions/hard surfaces = higher pitch noise/softer surfaces = lower pitch noises/edge to surface = chirping.
- Creak—(Like walking on an old wooden floor)
  Creak characteristics include firm contact/slow movement/twisting with a rotational movement/pitch dependent on materials/often brought on by activity.
- Rattle—(Like shaking a baby rattle)
  Rattle characteristics include the fast repeated contact/vibration or similar movement/loose parts/missing clip or fastener/incorrect clearance.
- Knock —(Like a knock on a door)
  Knock characteristics include hollow sounding/sometimes repeating/often brought on by driver action.
- Tick—(Like a clock second hand)
  Tick characteristics include gentle contacting of light materials/loose components/can be caused by driver action or road conditions.
- Thump—(Heavy, muffled knock noise)
  Thump characteristics include softer knock/dead sound often brought on by activity.
- Buzz—(Like a bumble bee)
  Buzz characteristics include high frequency rattle/firm contact.
- Often the degree of acceptable noise level will vary depending upon the person. A noise that you may judge as acceptable may be very irritating to the customer.
- Weather conditions, especially humidity and temperature, may have a great effect on noise level.

DUPLICATE THE NOISE AND TEST DRIVE

If possible, drive the vehicle with the customer until the noise is duplicated. Note any additional information on the Diagnostic Worksheet regarding the conditions or location of the noise. This information can be used to duplicate the same conditions when you confirm the repair.
If the noise can be duplicated easily during the test drive, to help identify the source of the noise, try to duplicate the noise with the vehicle stopped by doing one or all of the following:

1) Close a door.
2) Tap or push/pull around the area where the noise appears to be coming from.
3) Rev the engine.
4) Use a floor jack to recreate vehicle “twist”.
5) At idle, apply engine load (electrical load, half-clutch on M/T model, drive position on A/T model).
6) Raise the vehicle on a hoist and hit a tire with a rubber hammer.

- Drive the vehicle and attempt to duplicate the conditions the customer states exist when the noise occurs.
- If it is difficult to duplicate the noise, drive the vehicle slowly on an undulating or rough road to stress the vehicle body.

CHECK RELATED SERVICE BULLETINS

After verifying the customer concern or symptom, check ASIST for Technical Service Bulletins (TSBs) related to that concern or symptom.
If a TSB relates to the symptom, follow the procedure to repair the noise.

LOCATE THE NOISE AND IDENTIFY THE ROOT CAUSE

1. Narrow down the noise to a general area.To help pinpoint the source of the noise, use a listening tool (Chassis Ear: J-39570, Engine Ear: J-39565 and mechanic's stethoscope).
2. Narrow down the noise to a more specific area and identify the cause of the noise by:

- removing the components in the area that you suspect the noise is coming from.
  Do not use too much force when removing clips and fasteners, otherwise clips and fasteners can be broken or lost during the repair, resulting in the creation of new noise.
- tapping or pushing/pulling the component that you suspect is causing the noise.
  Do not tap or push/pull the component with excessive force, otherwise the noise will be eliminated only temporarily.
- feeling for a vibration with your hand by touching the component(s) that you suspect is (are) causing the noise.
- placing a piece of paper between components that you suspect are causing the noise.
- looking for loose components and contact marks.
  Refer to SE-7, "Generic Squeak and Rattle Troubleshooting" .

REPAIR THE CAUSE

- If the cause is a loose component, tighten the component securely.
- If the cause is insufficient clearance between components:
  - separate components by repositioning or loosening and retightening the component, if possible.
  - insulate components with a suitable insulator such as urethane pads, foam blocks, felt cloth tape or urethane tape. A NISSAN Squeak and Rattle Kit (J-43980) is available through your authorized NISSAN Parts Department.

CAUTION:
Do not use excessive force as many components are constructed of plastic and may be damaged.
Always check with the Parts Department for the latest parts information.
The following materials are contained in the NISSAN Squeak and Rattle Kit (J-43980). Each item can be ordered separately as needed.
URETHANE PADS [1.5 mm (0.059 in) thick]
Insulates connectors, harness, etc.
76268-9E005: 100×135 mm (3.94×5.31 in)/76884-71L01: 60×85 mm (2.36×3.35 in)/76884-71L02: 15×25 mm (0.59×0.98 in)
INSULATOR (Foam blocks)
Insulates components from contact. Can be used to fill space behind a panel.
73982-9E000: 45 mm (1.77 in) thick, 50×50 mm (1.97×1.97 in)/73982-50Y00: 10 mm (0.39 in) thick, 50×50 mm (1.97×1.97 in)
INSULATOR (Light foam block)

80845-71L00: 30 mm (1.18 in) thick, 30×50 mm (1.18×1.97 in)
FELT CLOTH TAPE
Used to insulate where movement does not occur. Ideal for instrument panel applications.
68370-4B000: 15×25 mm (0.59×0.98 in) pad/68239-13E00: 5 mm (0.20 in) wide tape roll. The following materials not found in the kit can also be used to repair squeaks and rattles.
UHMW (TEFLON) TAPE
Insulates where slight movement is present. Ideal for instrument panel applications.
SILICONE GREASE
Used instead of UHMW tape that will be visible or not fit.
Note: Will only last a few months.
SILICONE SPRAY
Use when grease cannot be applied.
DUCT TAPE
Use to eliminate movement.

CONFIRM THE REPAIR

Confirm that the cause of a noise is repaired by test driving the vehicle. Operate the vehicle under the same conditions as when the noise originally occurred. Refer to the notes on the Diagnostic Worksheet.

Generic Squeak and Rattle Troubleshooting

EIS0046Y

Refer to Table of Contents for specific component removal and installation information.

INSTRUMENT PANEL

Most incidents are caused by contact and movement between:

1. The cluster lid A and instrument panel
2. Acrylic lens and combination meter housing
3. Instrument panel to front pillar garnish
4. Instrument panel to windshield
5. Instrument panel mounting pins
6. Wiring harnesses behind the combination meter
7. A/C defroster duct and duct joint

These incidents can usually be located by tapping or moving the components to duplicate the noise or by pressing on the components while driving to stop the noise. Most of these incidents can be repaired by applying felt cloth tape or silicone spray (in hard to reach areas). Urethane pads can be used to insulate wiring harness.

CAUTION:
Do not use silicone spray to isolate a squeak or rattle. If you saturate the area with silicone, you will not be able to recheck the repair.

CENTER CONSOLE

Components to pay attention to include:

1. Shifter assembly cover to finisher
2. A/C control unit and cluster lid C
3. Wiring harnesses behind audio and A/C control unit

The instrument panel repair and isolation procedures also apply to the center console.

DOORS

Pay attention to the:

1. Finisher and inner panel making a slapping noise
2. Inside handle escutcheon to door finisher
3. Wiring harnesses tapping
4. Door striker out of alignment causing a popping noise on starts and stops

Tapping or moving the components or pressing on them while driving to duplicate the conditions can isolate many of these incidents. You can usually insulate the areas with felt cloth tape or insulator foam blocks from the NISSAN Squeak and Rattle Kit (J-43980) to repair the noise.

TRUNK

Trunk noises are often caused by a loose jack or loose items put into the trunk by the owner.
In addition look for:

1. Trunk lid bumpers out of adjustment
2. Trunk lid striker out of adjustment
3. The trunk lid torsion bars knocking together
4. A loose license plate or bracket

Most of these incidents can be repaired by adjusting, securing or insulating the item(s) or component(s) causing the noise.

SUNROOF/HEADLINING

Noises in the sunroof/headlining area can often be traced to one of the following:

1. Sunroof lid, rail, linkage or seals making a rattle or light knocking noise
2. Sun visor shaft shaking in the holder
3. Front or rear windshield touching headliner and squeaking

Again, pressing on the components to stop the noise while duplicating the conditions can isolate most of these incidents. Repairs usually consist of insulating with felt cloth tape.

OVERHEAD CONSOLE (FRONT AND REAR)

Overhead console noises are often caused by the console panel clips not being engaged correctly. Most of these incidents are repaired by pushing up on the console at the clip locations until the clips engage.
In addition look for:

1. Loose harness or harness connectors.
2. Front console map/reading lamp lense loose.
3. Loose screws at console attachment points.

SEATS

When isolating seat noise it's important to note the position the seat is in and the load placed on the seat when the noise is present. These conditions should be duplicated when verifying and isolating the cause of the noise.
Cause of seat noise include:

1. Headrest rods and holder
2. A squeak between the seat pad cushion and frame
3. The rear seatback lock and bracket

These noises can be isolated by moving or pressing on the suspected components while duplicating the conditions under which the noise occurs. Most of these incidents can be repaired by repositioning the component or applying urethane tape to the contact area.

UNDERHOOD

Some interior noise may be caused by components under the hood or on the engine wall. The noise is then transmitted into the passenger compartment.
Causes of transmitted underhood noise include:

1. Any component mounted to the engine wall
2. Components that pass through the engine wall
3. Engine wall mounts and connectors
4. Loose radiator mounting pins
5. Hood bumpers out of adjustment
6. Hood striker out of adjustment

These noises can be difficult to isolate since they cannot be reached from the interior of the vehicle. The best method is to secure, move or insulate one component at a time and test drive the vehicle. Also, engine RPM or load can be changed to isolate the noise. Repairs can usually be made by moving, adjusting, securing, or insulating the component causing the noise.

Diagnostic Worksheet

EIS0046Z

SQUEAK & RATTLE DIAGNOSTIC WORKSHEET

Dear Nissan Customer:
We are concerned about your satisfaction with your Nissan vehicle. Repairing a squeak or rattle sometimes can be very difficult. To help us fix your Nissan right the first time, please take a moment to note the area of the vehicle where the squeak or rattle occurs and under what conditions. You may be asked to take a test drive with a service advisor or technician to ensure we confirm the noise you are hearing.

I. WHERE DOESTHE NOISE COME FROM? (circle the area of the vehicle)
The illustrations are for reference only, and may not reflect the actual configuration of your vehicle.

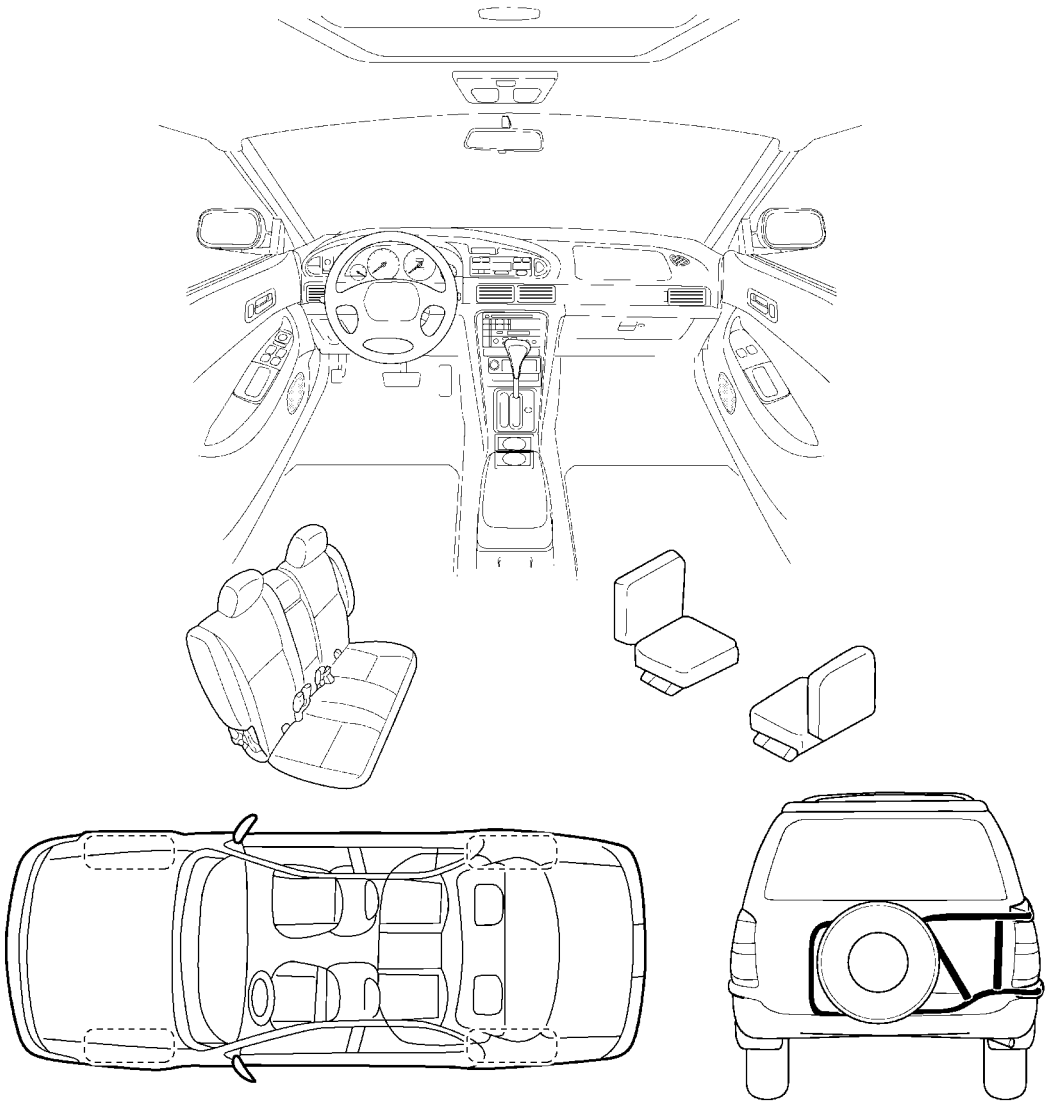

Continue to the back of the worksheet and briefly describe the location of the noise or rattle. In addition, please indicate the conditions which are present when the noise occurs.

LIWA0276E

SQUEAK & RATTLE DIAGNOSTIC WORKSHEET- page 2

Briefly describe the location where the noise occurs:

_____

_____

II. WHEN DOES IT OCCUR? (check the boxes that apply)

- ❑ anytime
- ❑ 1st time in the morning
- ❑ only when it is cold outside
- ❑ only when it is hot outside
- ❑ after sitting out in the sun
- ❑ when it is raining or wet
- ❑ dry or dusty conditions
- ❑ other: _____

III. WHEN DRIVING:

- ❑ through driveways
- ❑ over rough roads
- ❑ over speed bumps
- ❑ only at about ____ mph
- ❑ on acceleration
- ❑ coming to a stop
- ❑ on turns : left, right or either (circle)
- ❑ with passengers or cargo
- ❑ other: _____
- ❑ after driving ____ miles or ____ minutes

IV. WHAT TYPE OF NOISE?

- ❑ squeak (like tennis shoes on a clean floor)
- ❑ creak (like walking on an old wooden floor)
- ❑ rattle (like shaking a baby rattle)
- ❑ knock (like a knock on a door)
- ❑ tick (like a clock second hand)
- ❑ thump (heavy, muffled knock noise)
- ❑ buzz (like a bumble bee)

TO BE COMPLETED BY DEALERSHIP PERSONNEL
Test Drive Notes:

_____

_____

	YES	NO	Initials of person performing
Vehicle test driven with customer	❑	❑	_____
- Noise verified on test drive	❑	❑	
- Noise source located and repaired	❑	❑	_____
- Follow up test drive performed to confirm repair	❑	❑	_____

VIN: _____ Customer Name: _____

W.O. #: _____ Date: _____ SBT844

This form must be attached to Work Order

AUTOMATIC DRIVE POSITIONER

PFP:28491

Component Parts and Harness Connector Location

EIS0058Z

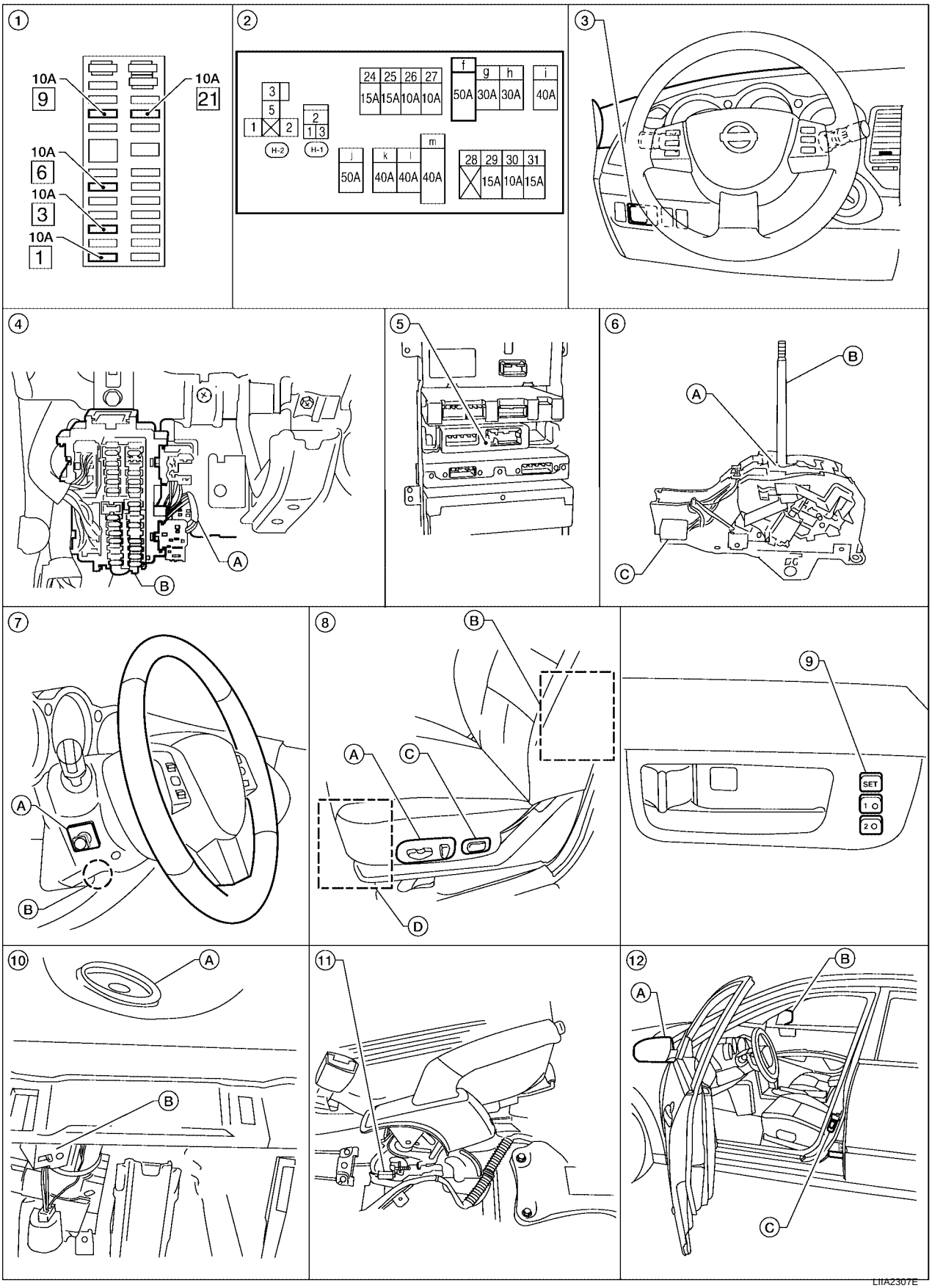

1. Fuse block (J/B)
2. Fuse and fusible link box
3. Door mirror remote control switch M7
4. A. BCM M18, M19, M20
   B. Fuse block (J/B)
5. Automatic drive positioner control unit M41, M42
6. A. A/T device (detent switch) M34
   B. A/T selector lever
   C. A/T device harness connector
7. A. ADP steering switch M16
   B. Telescopic motor M66, M67
   Tilt motor M68, M69
8. A. Power seat switch LH P8
   B. Reclining motor P5, lumbar motor P10
   C. Lumbar switch P9
   D. Driver seat control unit P2, P3
   Sliding motor P4
   Front lifting motor P6
   Rear lifting motor P7
9. Seat memory switch D5
10. A. Ignition key cylinder
    B. Key switch and key lock solenoid M27
11. Parking brake switch M36
12. A. Door mirror LH D4
    B. Door mirror RH D107
    C. Front door switch LH B8

System Description

EIS003X7

OPERATIVE CONDITION

The drive position can be set in 2 ways, manually and automatically.

Manual Operation

The driving position (seat position, steering wheel position and door mirror position) can be adjusted with the power seat switch, ADP steering switch or door mirror remote control switch.

NOTE:

- The door mirrors can be manually operated with the ignition switch turned to ACC or ON.

Automatic Operation

Function		Description
Memory operation		The seat, steering wheel and door mirrors move to the stored driving position by pushing memory switch (1 or 2).
Entry/Exiting function	Exiting operation	At exit, the seat moves backward and the steering wheel raises. (Exiting position)
	Entry operation	At entry, the seat and steering wheel will move from the exiting position to the previous driving position before the exiting operation.
Key fob interlock operation		Perform memory operation, exiting operation and entry operation by pressing key fob unlock button.

NOTE:

- Disconnecting the battery erases the stored memory.
- After connecting the battery, insert the key into the ignition cylinder and turn the driver door switch ON (open)→OFF (close)→ON (open), the Entry/Exiting operation becomes possible.
- After exiting operation is carried out, entry operation can be operated.

Auto operation temporary stop conditions.	When ignition switch turns to START during memory switch operation and entry operation, memory switch operation and entry operation is stopped.
Auto operation stop conditions.	● When the vehicle speed becomes 7 km/h (4 MPH) or higher. (memory switch operation and entry operation). ● When the setting switch, memory switch 1 or 2 are pressed. ● When A/T selector lever is in any position other than P (A/T models). ● When the parking brake switch is in the OFF position (M/T models). ● When the door mirror remote control switch is operated (when ignition switch turned to ON). ● When power seat switch turned ON. ● When door mirror operates. ● When driver seat sliding Entry/Exiting setting is OFF (entry/exiting operation).

NOTE:

During automatic operation, if the ignition switch is turned ON→START, the automatic operation is suspended. When the ignition switch returns to ON, it resumes.

SYSTEM DESCRIPTION

- The system automatically moves the driver seat and steering wheel to facilitate entry/exit to/from the vehicle. The automatic drive positioner control unit can also store the optimum driving positions (driver seat, steering wheel position and door mirror position) for 2 people. If the drivers change, one-touch operation allows changing to the other driving position.
- The settings (ON/OFF) of the automatic sliding seat (Entry/Exiting operation) at entry/exit can be changed as desired.

Fail-Safe Mode

When the ignition switch is in the ON position, if any of the parts (indicated in the following chart) move more than the specified amount within a period “T1” when no “ON” input is sent from any of the switches (indicated in the following chart), or an output from the automatic drive positioner is not produced, an output malfunction is sensed. Motor operation will be suspended automatically, and all automatic operations will be ineffective. (In this case, the motor will not operate manually).

OPERATED PORTION	T1
Seat sliding	Approx. 2.5 sec.
Seat reclining	Same as above
Seat lifting (Front)	Same as above
Seat lifting (Rear)	Same as above
Steering wheel	Same as above

Cancel of Fail-safe Mode

- The mode is cancelled when the selector lever is shifted to P position from any other position for A/T or parking brake is engaged for M/T.

Memory Storing and Key Fob Interlock Storing

- Store the 2 driving positions and shifts to the stored driving position with the memory switch.
- Key fob interlock function is set simultaneously with setting driving position memory. It can set driving position to memory position.

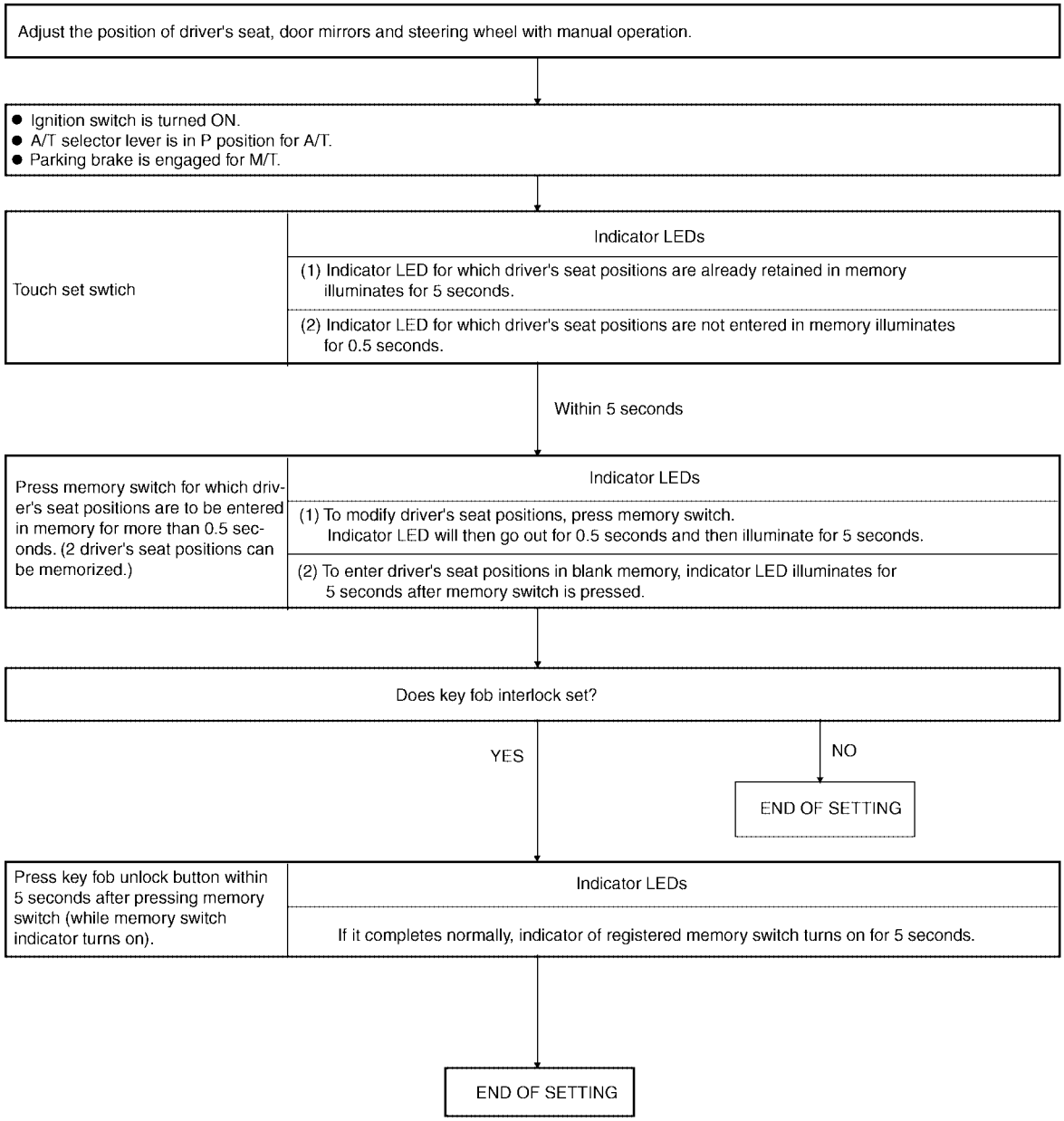

LIIA1646E

NOTE:

- If another key fob interlock function setting is performed by same key, newly registered setting is valid.
- If new memory string is performed to memory switch that already set key fob interlock function, key fob interlock function setting is reset.
- If key fob does not set previously, key fob interlock function cannot set.

Memory Operation

Selecting the memorized position.

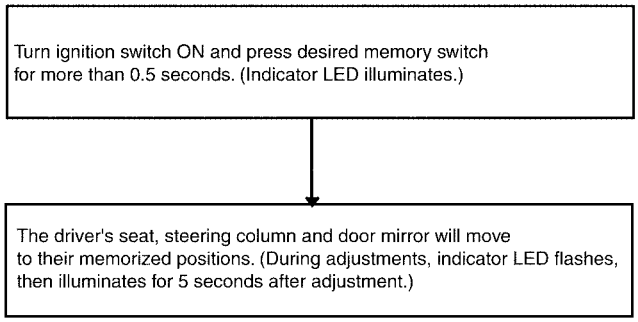

LIIA0436E

NOTE:
The driver's seat position and steering adjustment functions (see the following table) operate simultaneously in the order of priority.

Priority	Function	Priority	Function
1	Seat sliding, (door mirror LH/RH)*	4	Seat lifter-FR
2	Steering wheel	5	Seat lifter-RR
3	Seat reclining		

*: In conjunction with sliding the seat, the door mirrors are positioned.

Entry Operation

When the seat is in the exiting position, the following operation moves the seat and the steering wheel to the previous position before the exiting operation.

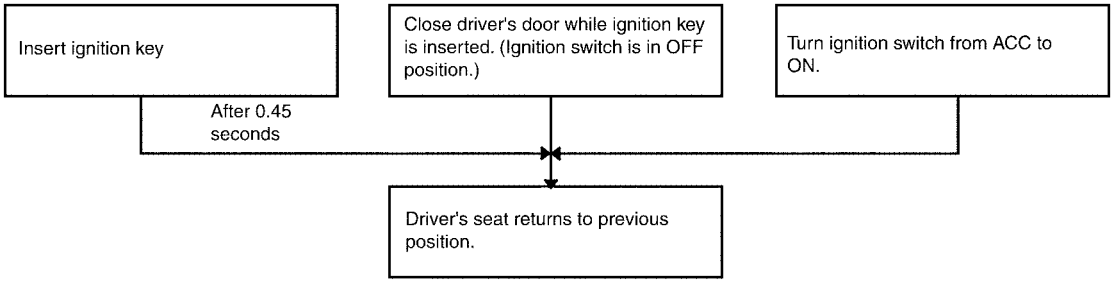

LIIA0437E

Exiting Operation

At exit, the seat is automatically moved to the exiting position.

- Seat: moves backward

- Steering wheel: raises.

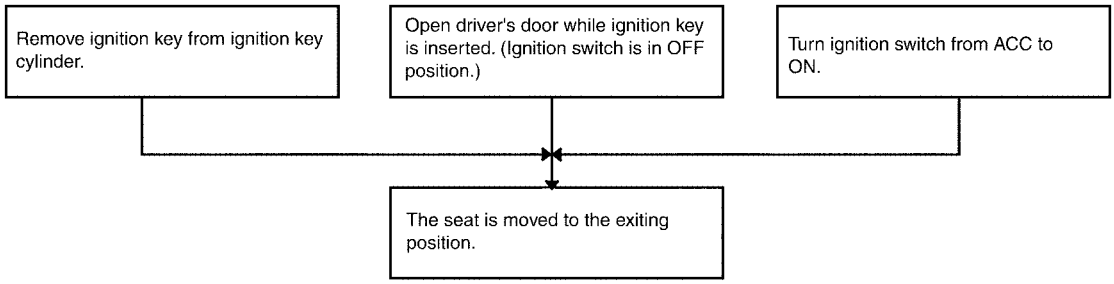

LIIA0438E

Key Fob Interlock Operation

- Perform memory operation, exiting operation and entry operation by pressing key fob unlock button.

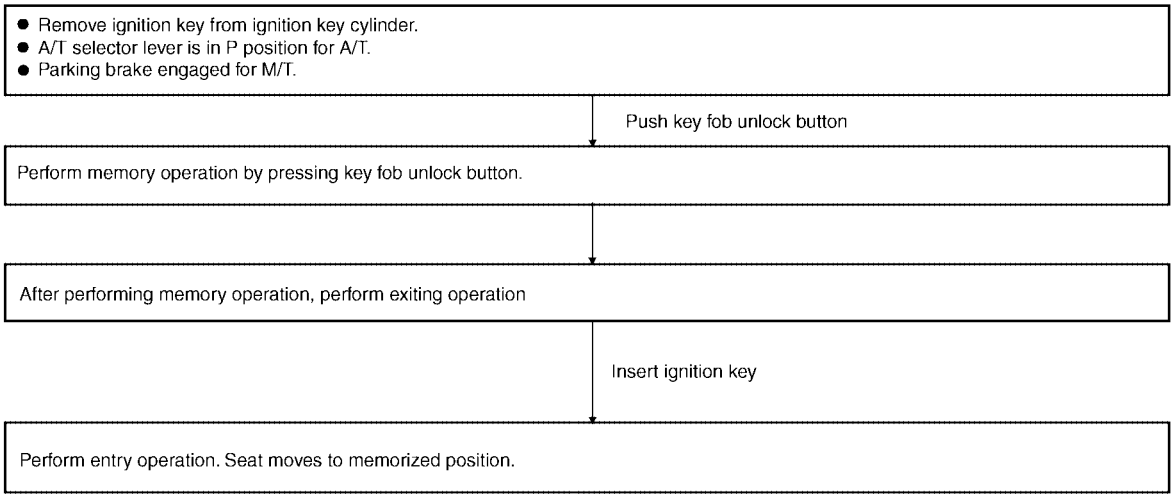

LIIA1647E

NOTE:

- If Entry/Exiting operation is cancelled, perform memory operation only.
- If ignition switch turns ON in the middle of memory operation, do not perform exiting operation after memory operation.
- If ignition switch turns ON in the middle of exiting operation, shift into entry operation at that time.

Schematic

EIS003X9

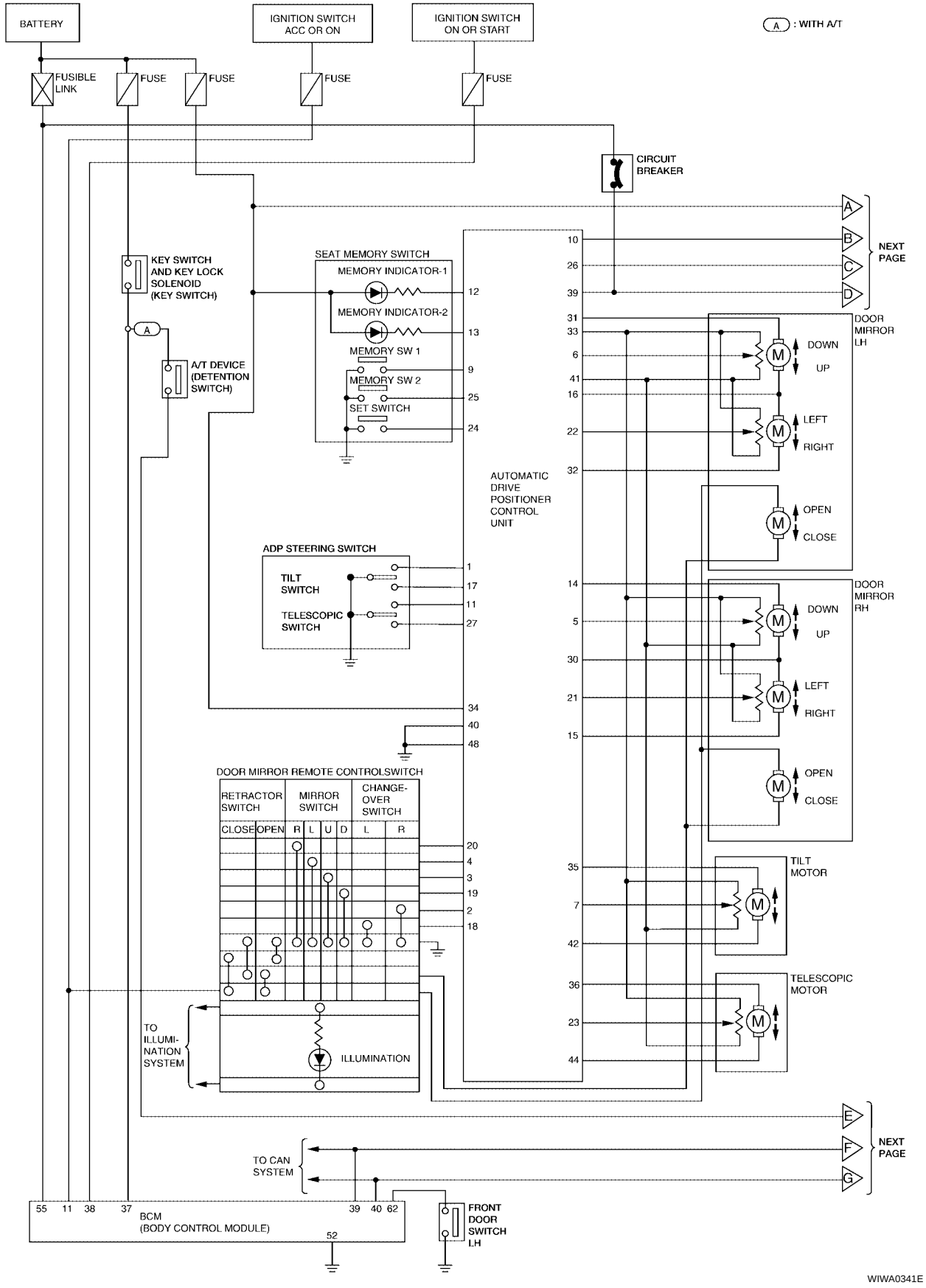

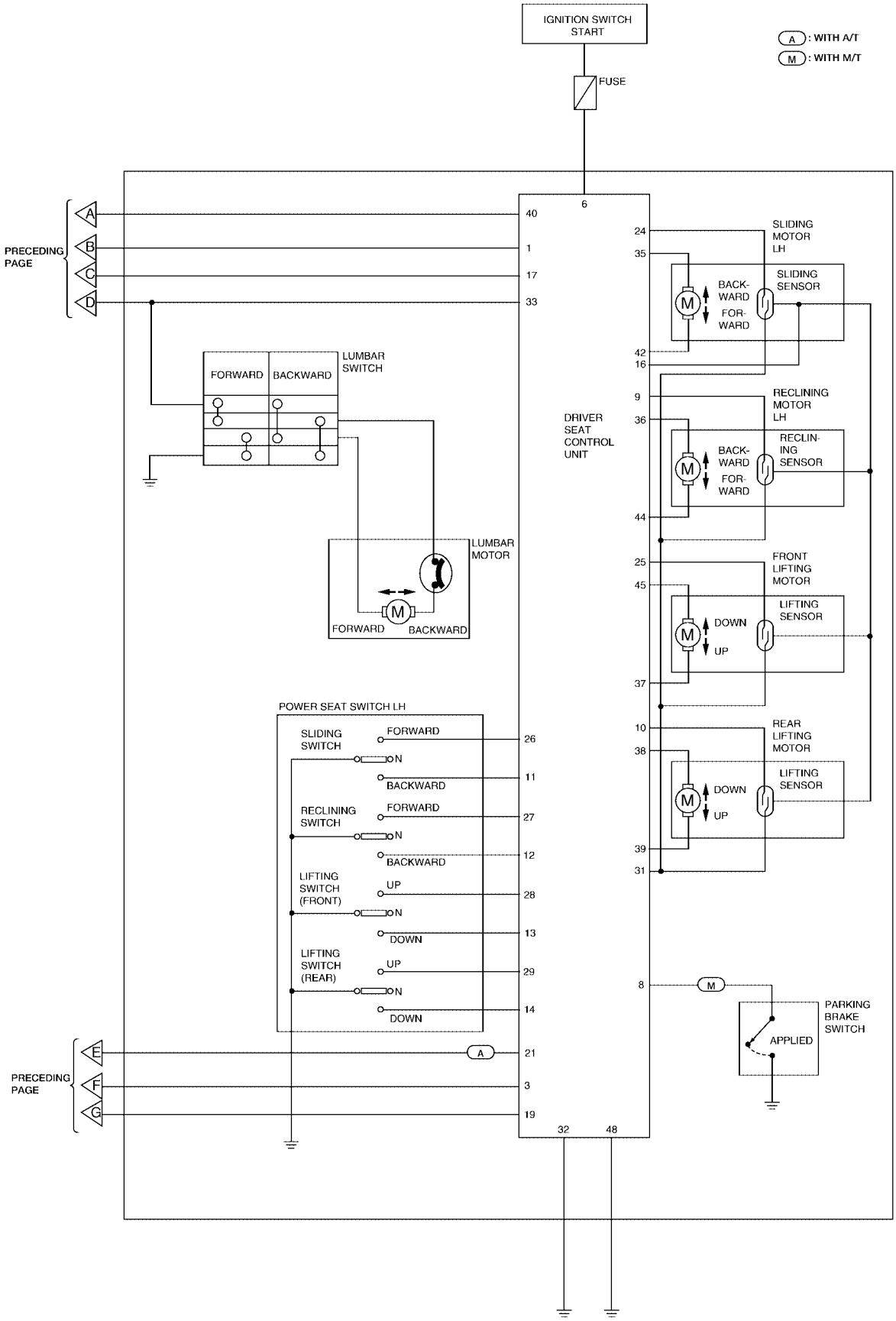
IGNITION SWITCH START
FUSE
A : WITH A/T
M : WITH M/T
PRECEDING PAGE
A
B
C
D
6
40
1
17
33
24
35
42
16
9
36
44
25
45
37
10
38
39
31
8
26
11
27
12
28
13
29
14
21
3
19
32
48
DRIVER SEAT CONTROL UNIT
SLIDING MOTOR LH
SLIDING SENSOR
BACK-WARD
FOR-WARD
RECLINING MOTOR LH
RECLIN-ING SENSOR
FRONT LIFTING MOTOR
LIFTING SENSOR
DOWN
UP
REAR LIFTING MOTOR
LIFTING SENSOR
DOWN
UP
LUMBAR SWITCH
FORWARD
BACKWARD
LUMBAR MOTOR
FORWARD
BACKWARD
POWER SEAT SWITCH LH
SLIDING SWITCH
FORWARD
N
BACKWARD
RECLINING SWITCH
FORWARD
N
BACKWARD
LIFTING SWITCH (FRONT)
UP
N
DOWN
LIFTING SWITCH (REAR)
UP
N
DOWN
PARKING BRAKE SWITCH
APPLIED
PRECEDING PAGE
E
F
G
WIWA0342E

Wiring Diagram — AUT/DP —

EIS003XA

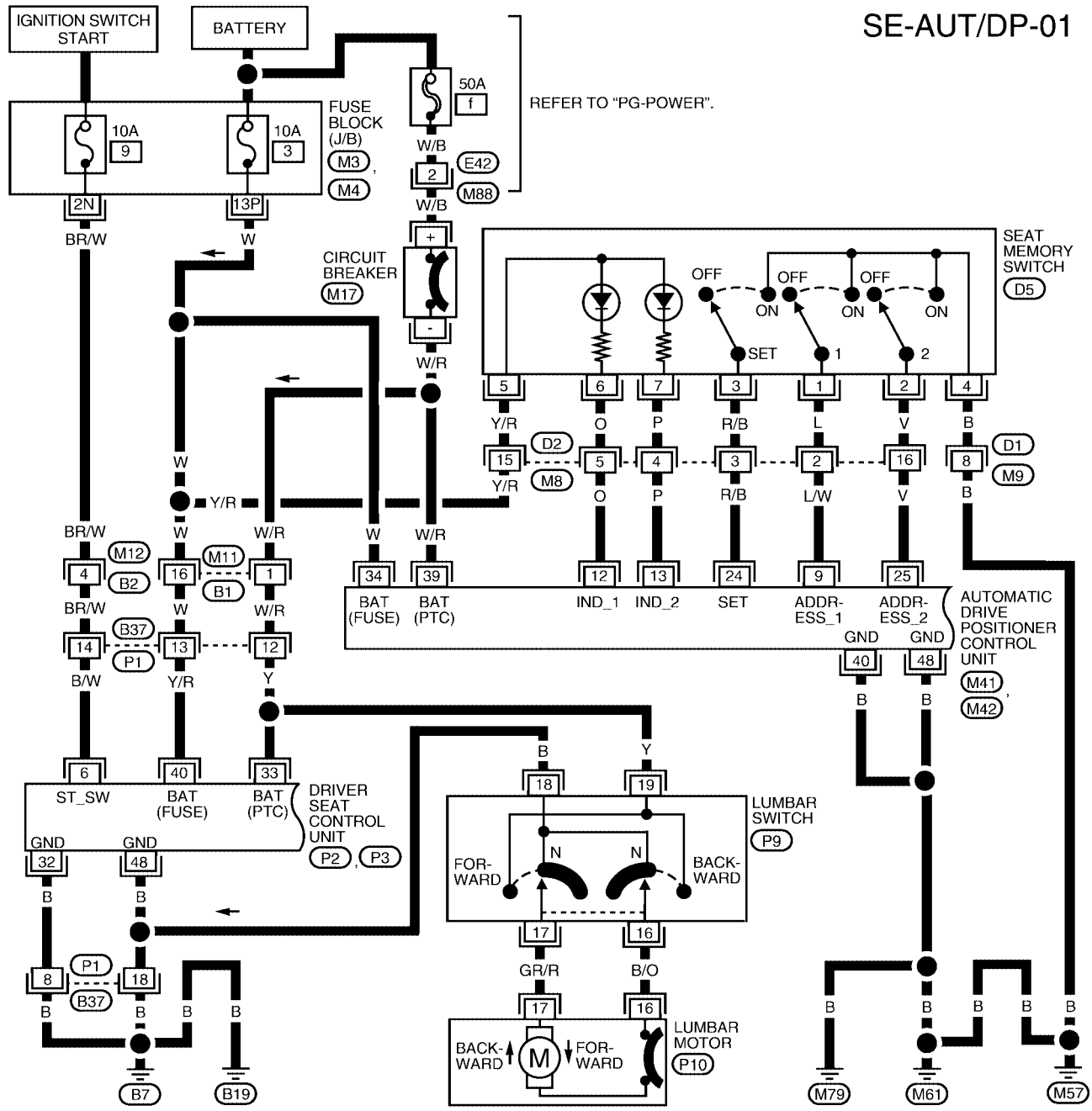

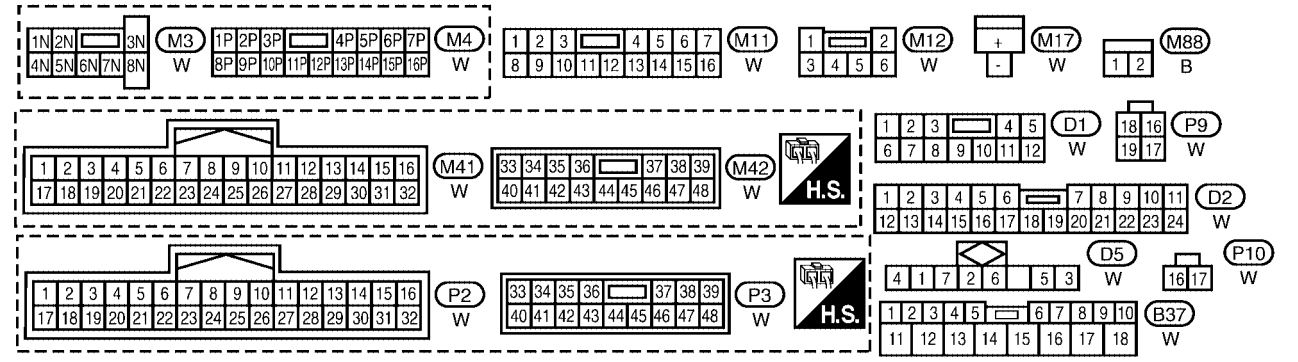

EARLY PRODUCTION

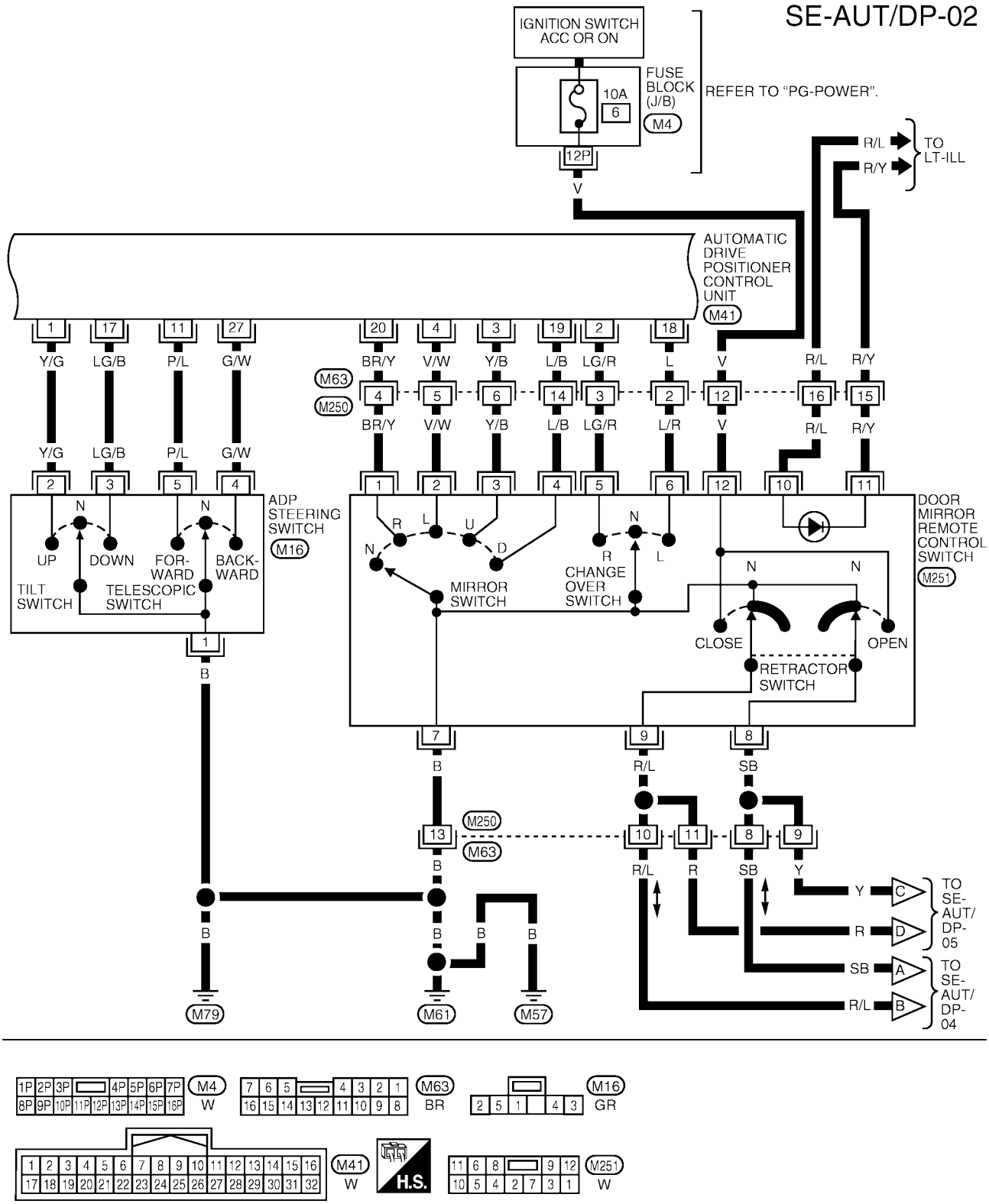

WIWA1158E

LATE PRODUCTION

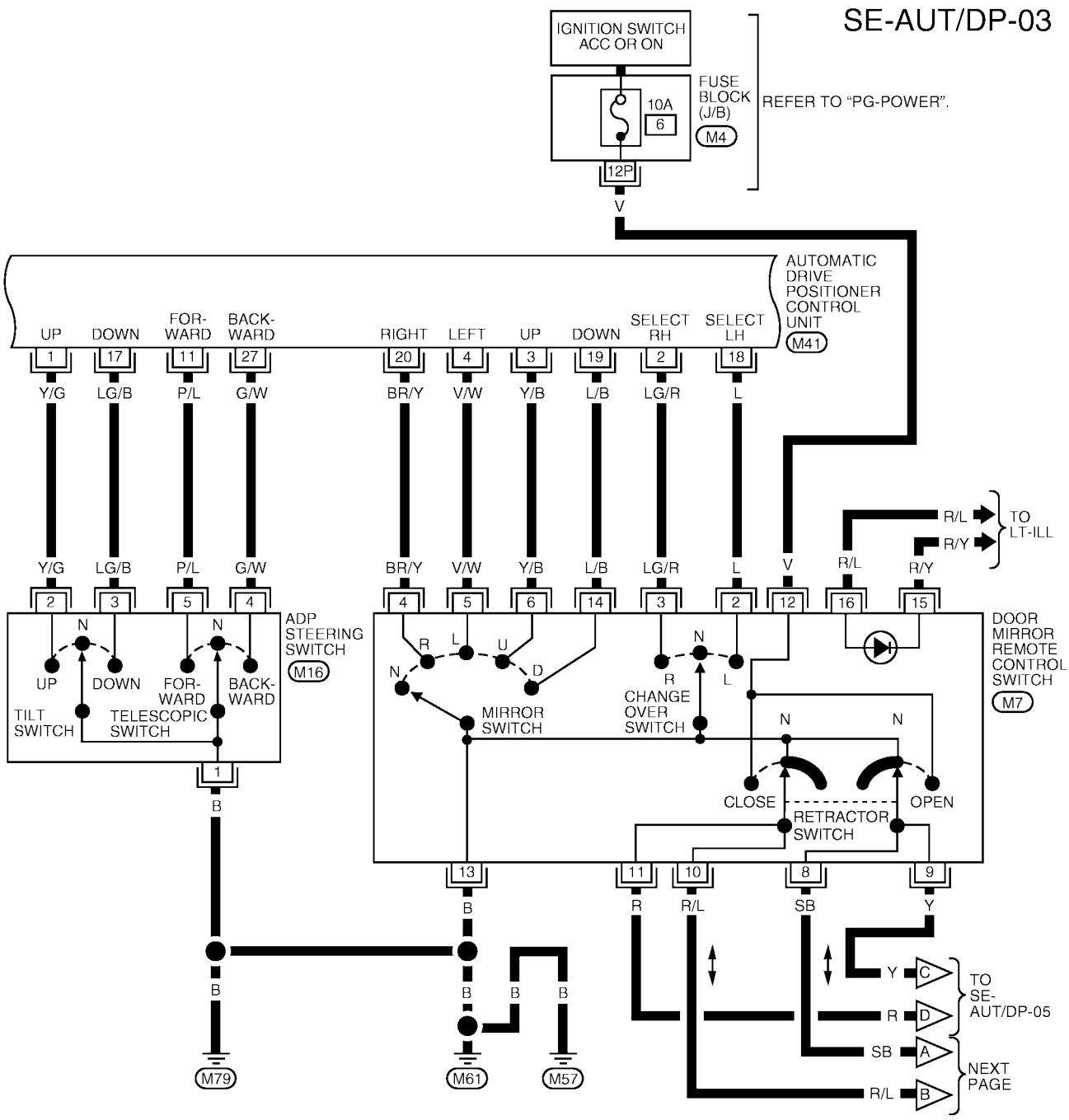

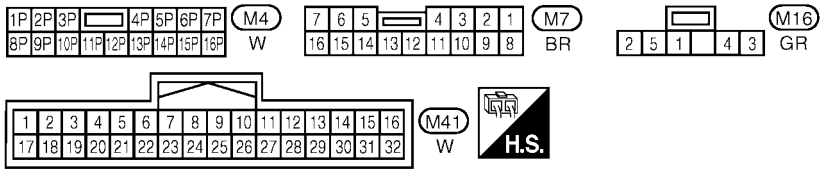

WIWA1157E

SE-AUT/DP-04

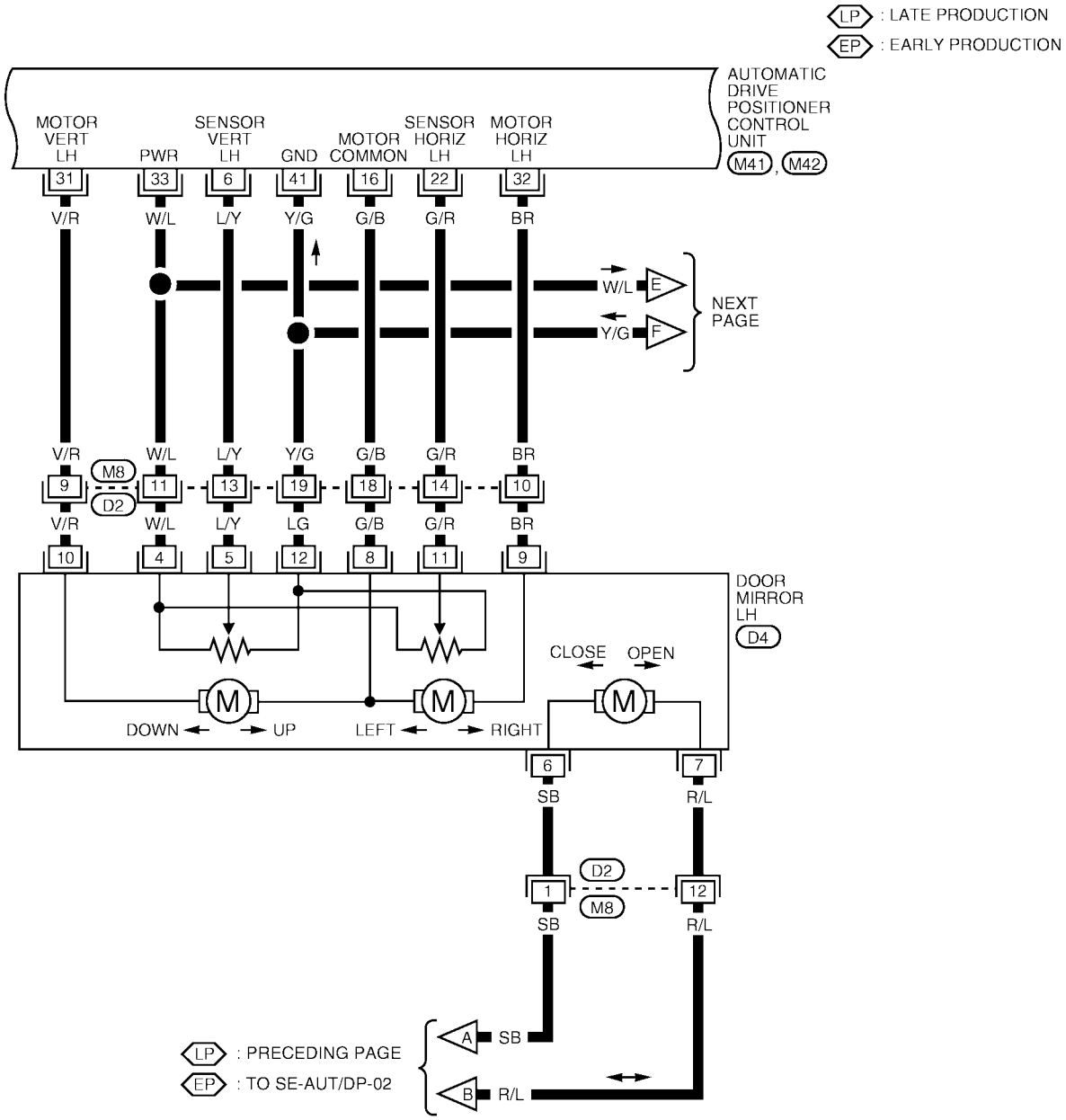

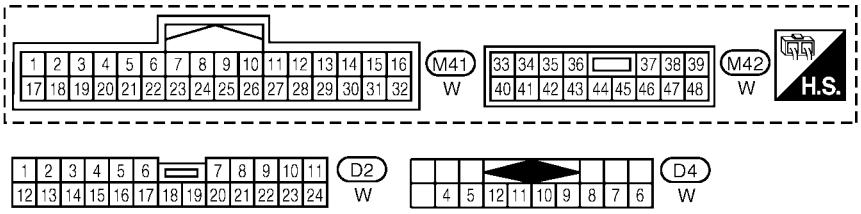

WIWA1159E

SE-AUT/DP-05

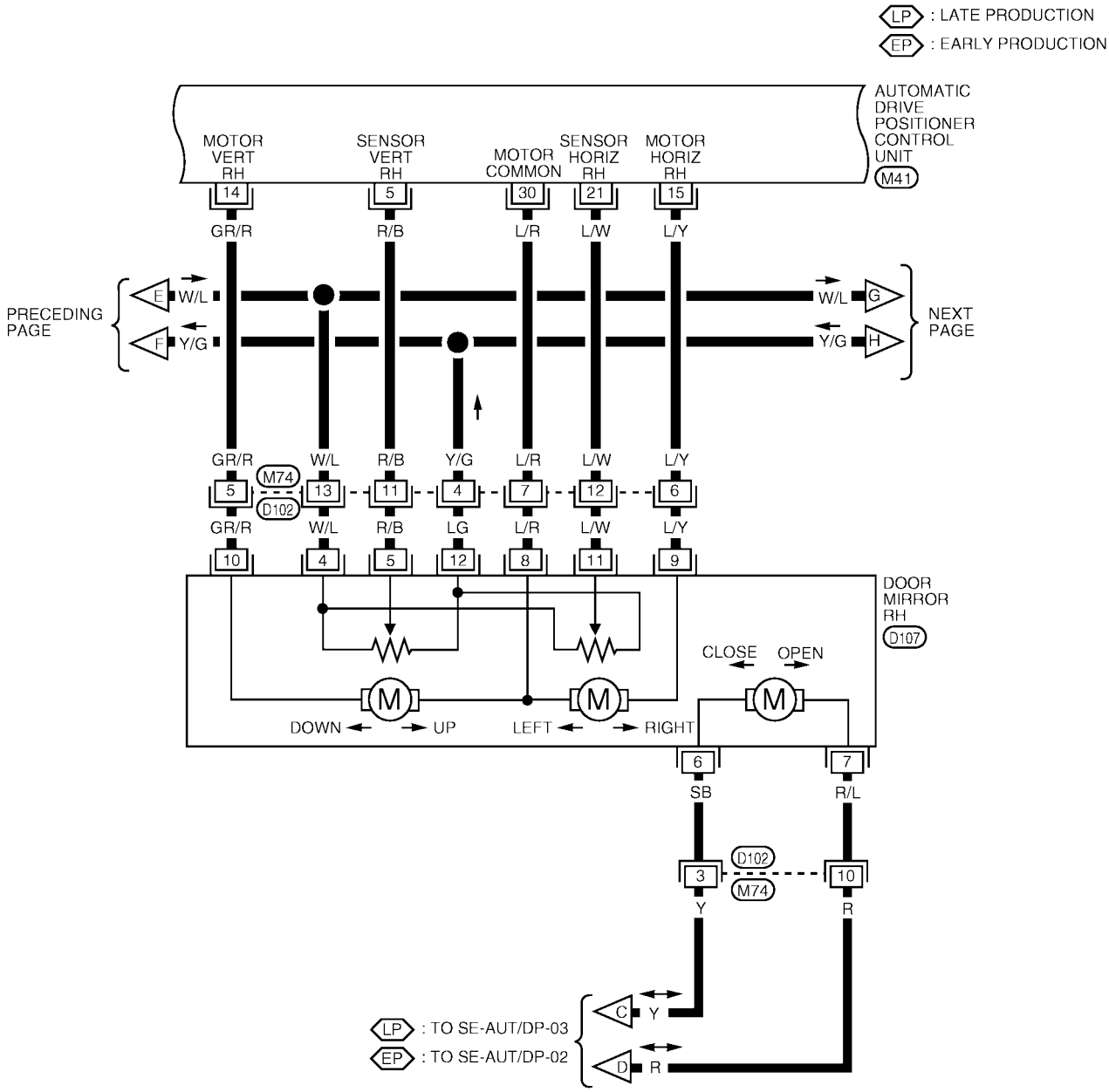

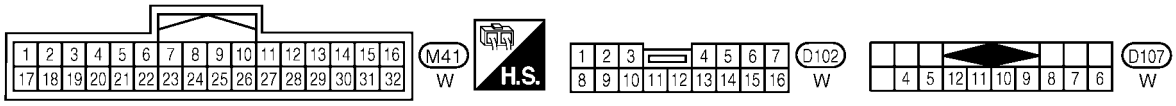

WIWA1160E

SE-AUT/DP-06

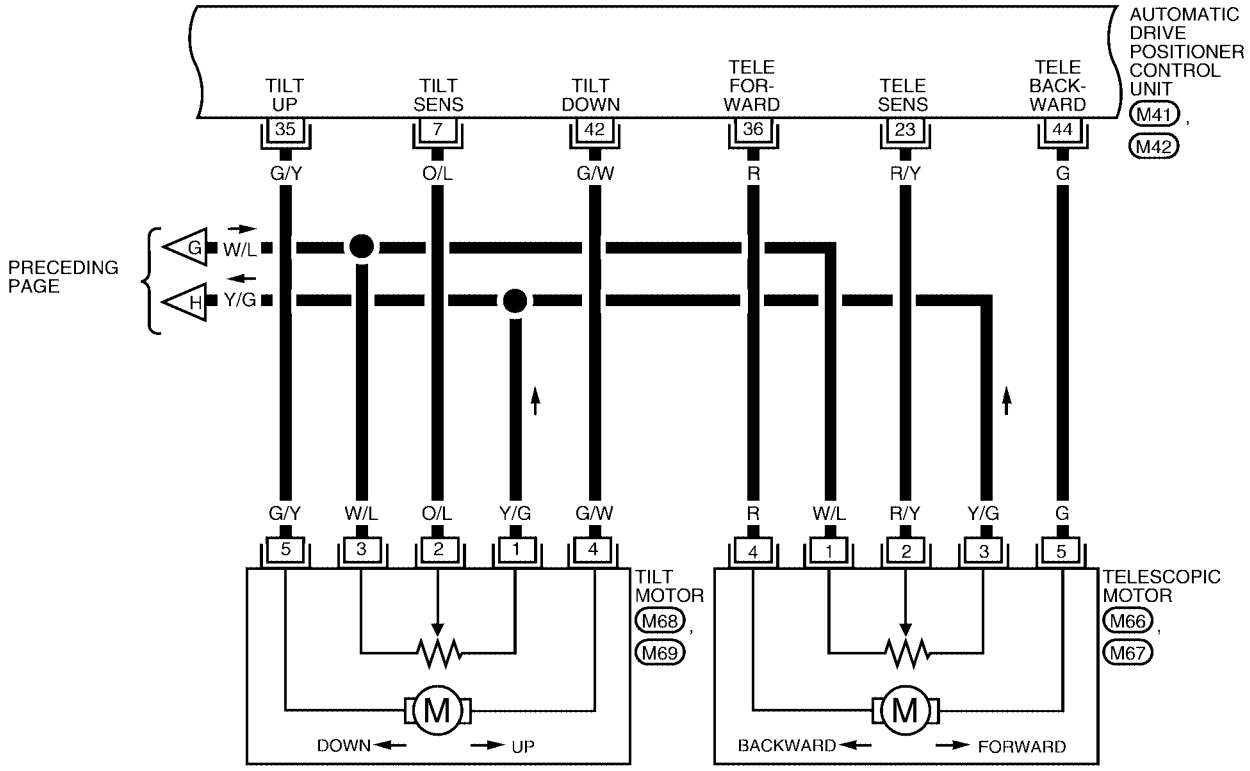

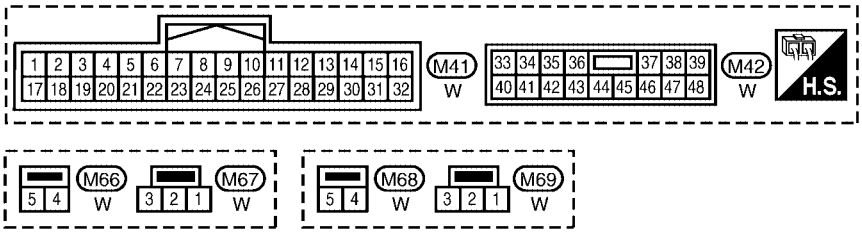

WIWA0347E

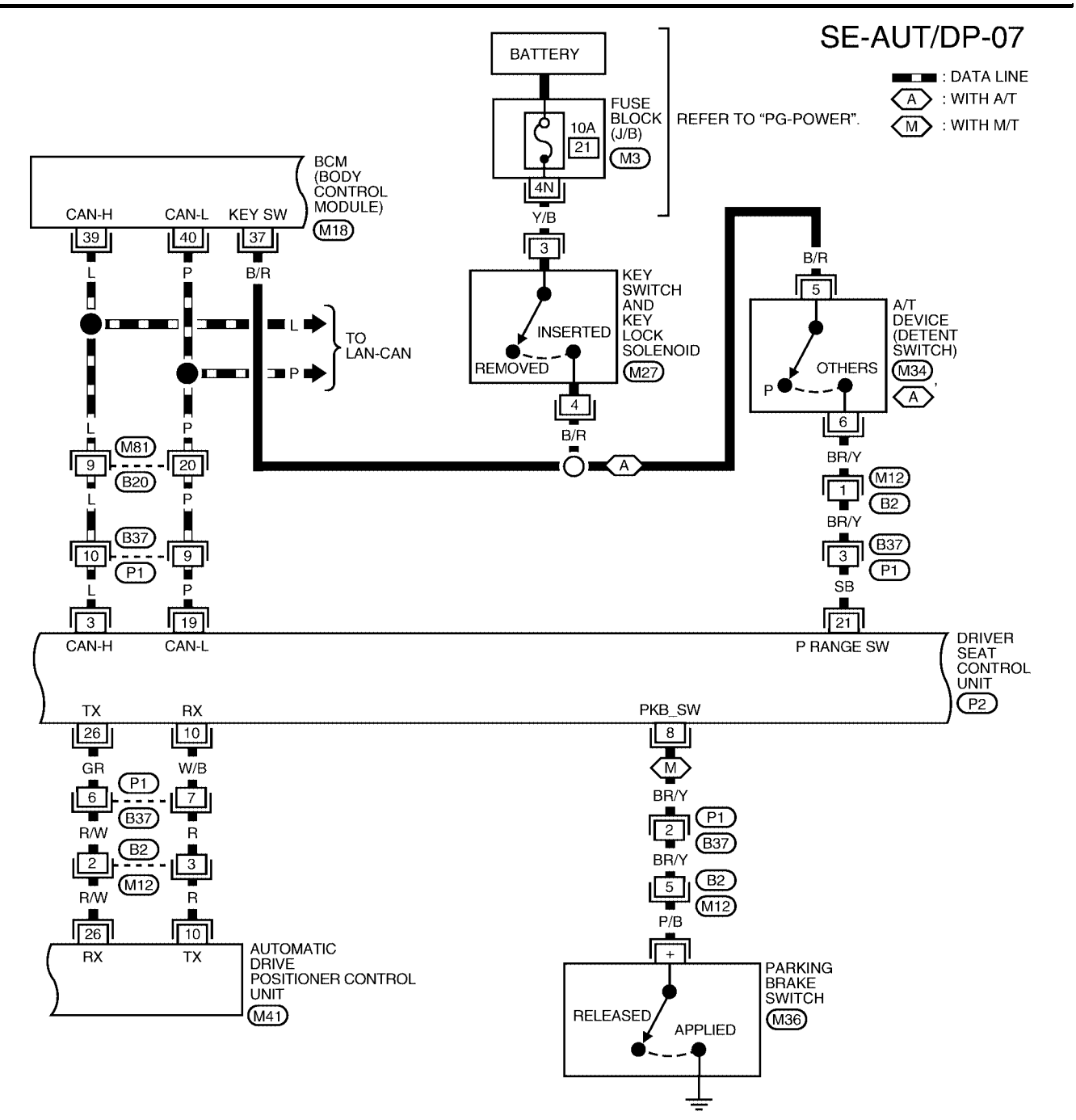
SE-AUT/DP-07
: DATA LINE
: WITH A/T
: WITH M/T
BATTERY
FUSE BLOCK (J/B)
M3
10A
21
4N
REFER TO "PG-POWER".
Y/B
BCM (BODY CONTROL MODULE)
M18
CAN-H
CAN-L
KEY SW
39
40
37
L
P
B/R
TO LAN-CAN
KEY SWITCH AND KEY LOCK SOLENOID
M27
INSERTED
REMOVED
3
4
A/T DEVICE (DETENT SWITCH)
M34
OTHERS
5
6
BR/Y
M12
B2
B37
P1
SB
M81
B20
9
20
10
19
21
P RANGE SW
DRIVER SEAT CONTROL UNIT
P2
TX
RX
PKB_SW
26
8
GR
W/B
R/W
R
M
P/B
AUTOMATIC DRIVE POSITIONER CONTROL UNIT
M41
PARKING BRAKE SWITCH
M36
RELEASED
APPLIED

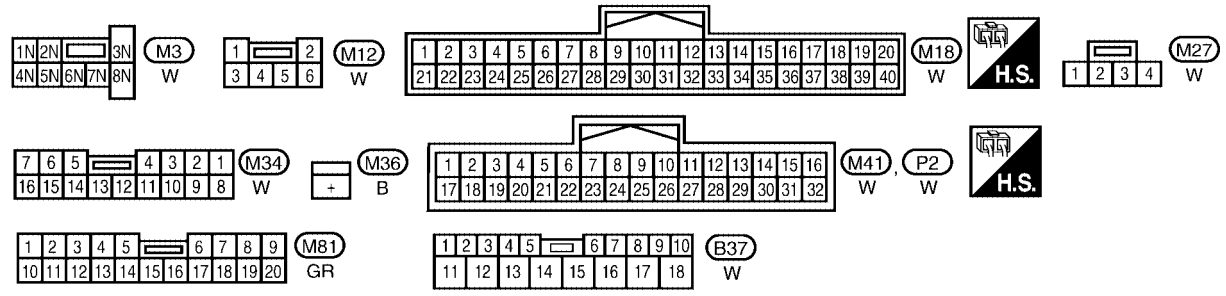
M3
W
M12
W
M18
W
H.S.
M27
W
M34
W
M36
B
M41
W
P2
W
M81
GR
B37
W

WIWA0348E

SE-AUT/DP-08

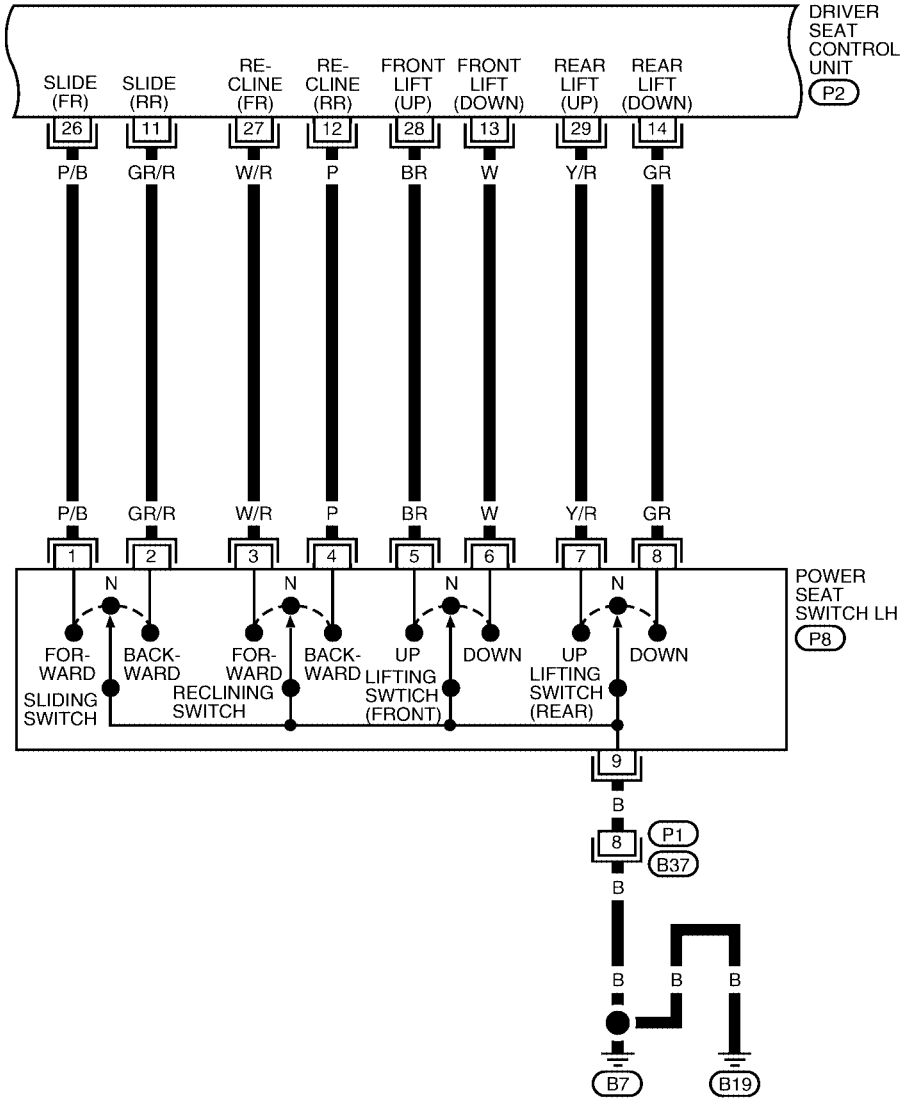

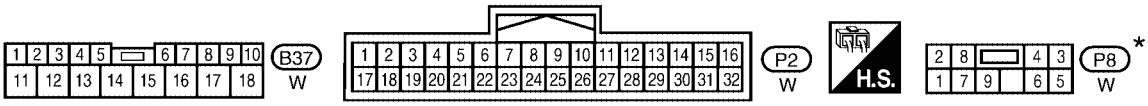

*: THIS CONNECTOR IS NOT SHOWN IN “HARNESS LAYOUT” OF PG SECTION.

WIWA0349E

SE-AUT/DP-09

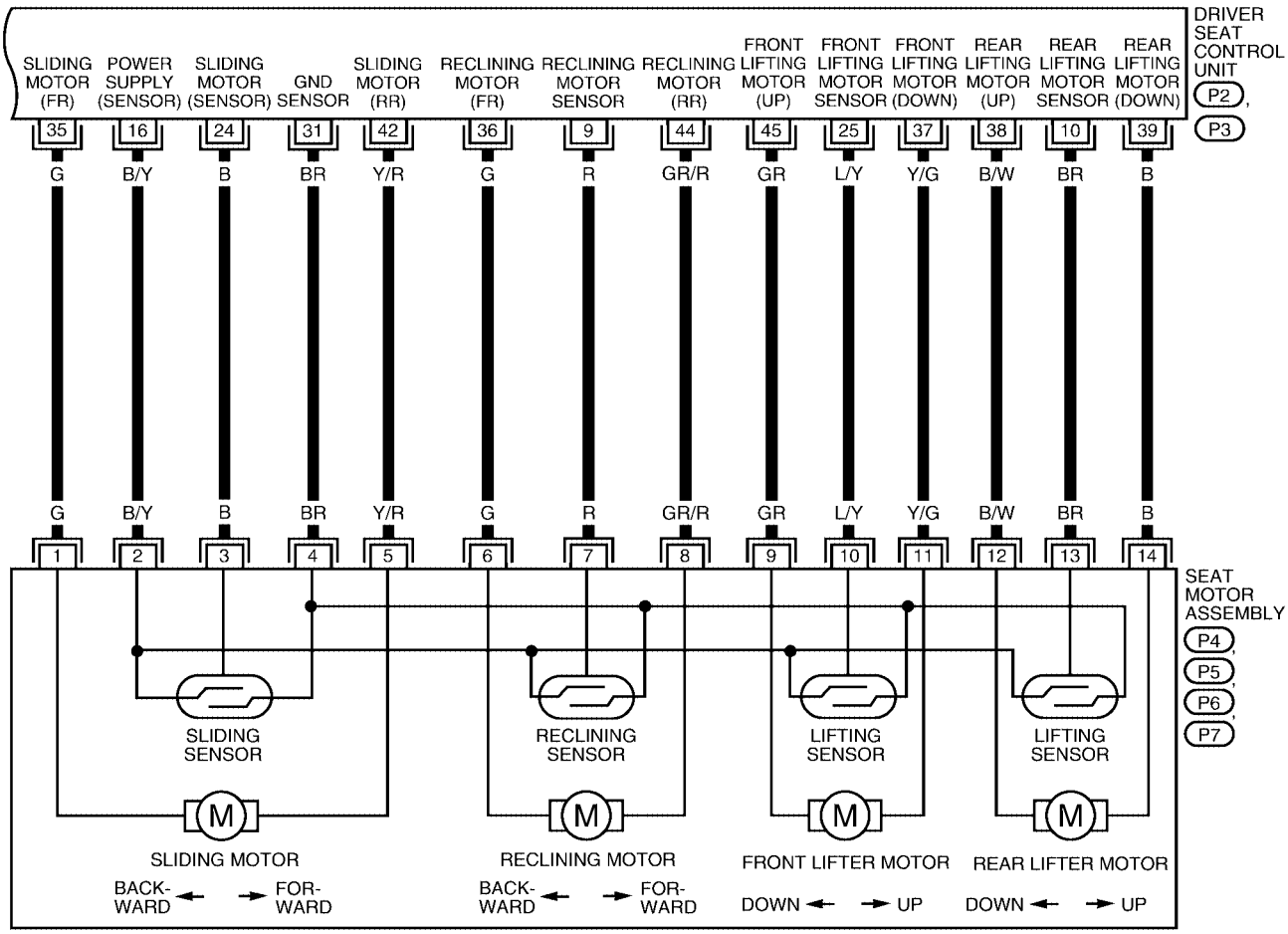

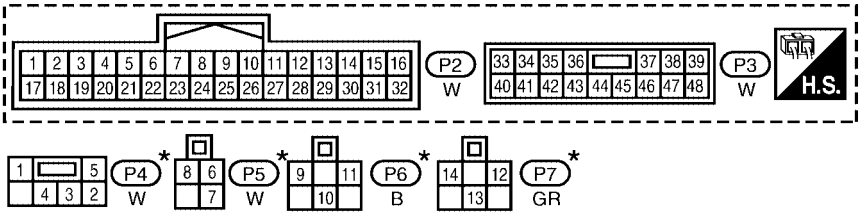

*: THIS CONNECTOR IS NOT SHOWN IN "HARNESS LAYOUT" OF PG SECTION.

WIWA0350E

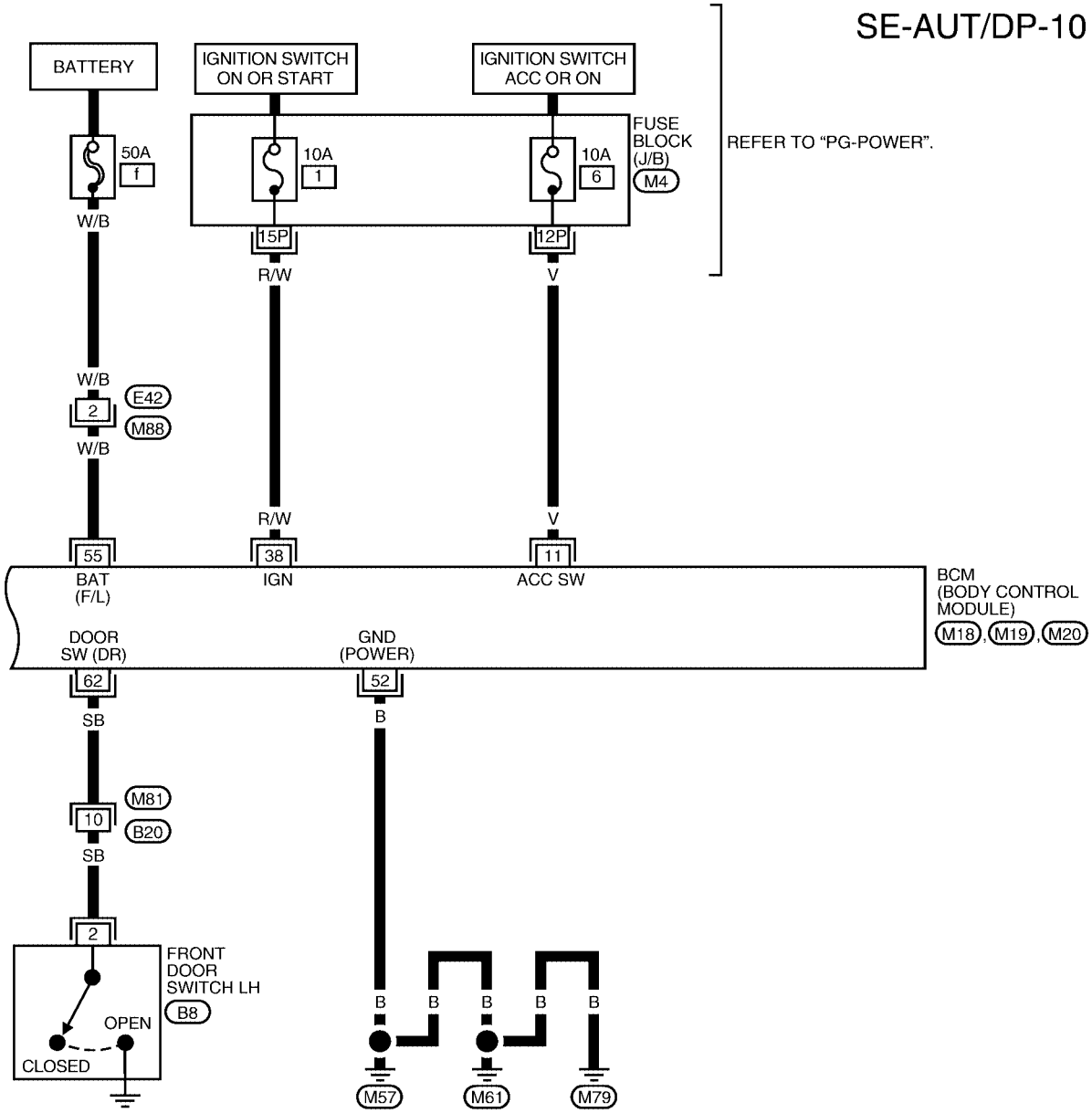
SE-AUT/DP-10
BATTERY
IGNITION SWITCH ON OR START
IGNITION SWITCH ACC OR ON
FUSE BLOCK (J/B)
M4
REFER TO "PG-POWER".
50A
f
10A
1
10A
6
W/B
15P
12P
R/W
V
W/B
E42
2
M88
W/B
R/W
V
55
38
11
BAT (F/L)
IGN
ACC SW
BCM (BODY CONTROL MODULE)
M18, M19, M20
DOOR SW (DR)
GND (POWER)
62
52
SB
B
M81
10
B20
SB
2
FRONT DOOR SWITCH LH
B8
OPEN
CLOSED
B
B
B
B
B
M57
M61
M79

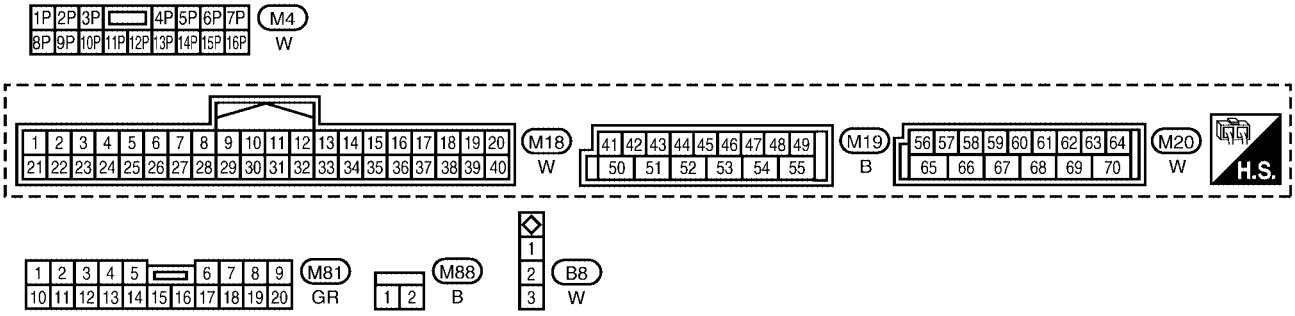
M4
W
M18
W
M19
B
M20
W
H.S.
M81
GR
M88
B
B8
W

WIWA0351E

Terminals and Reference Values for Driver Seat Control Unit

EIS003XB

Terminal	Wire Color	Item	Condition	Voltage (V) (Approx.)
1	W/B	UART LINE (RX)	—	—
3	L	CAN-H	—	—
6	B/W	Ignition switch (START)	Ignition switch (START position)	Battery voltage
8	BR/Y	Parking brake switch signal	Parking brake in ON position	0
			Parking brake in other than ON position with ignition key in ignition key cylinder	Battery voltage
9	R	Reclining sensor signal	ON (seat reclining motor operation)	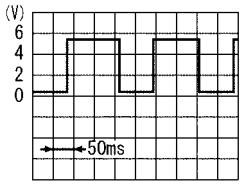 SIIA0692J
			Other than above	0 or 5
10	BR	Rear lifting sensor signal	ON (rear end lifter motor operation)	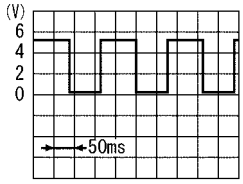 SIIA0693J
			Other than above	0 or 5
11	GR/R	Sliding switch BACKWARD signal	ON (sliding switch BACKWARD operation)	0
			Other than above	Battery voltage
12	P	Reclining switch BACKWARD signal	ON (reclining switch BACKWARD operation)	0
			Other than above	Battery voltage
13	W	Front lifting switch DOWN signal	ON (front lifting switch DOWN operation)	0
			Other than above	Battery voltage
14	GR	Rear lifting switch DOWN signal	ON (rear lifting switch DOWN operation)	0
			Other than above	Battery voltage
16	B/Y	Power supply (ENCODER)	—	Battery voltage
17	GR	UART LINE (TX)	—	—
19	P	CAN-L	—	—
21	SB	A/T device (detent switch) signal	Selector lever P position	0
			Selector lever other than P position with ignition key in ignition key cylinder	Battery voltage
24	B	Sliding sensor signal	ON (seat sliding motor operation)	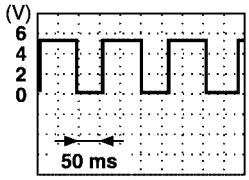 PIIA3277E
			Other than above	

Terminal	Wire Color	Item	Condition	Voltage (V) (Approx.)
25	L/Y	Front lifting sensor signal	ON (front end lifter motor operation)	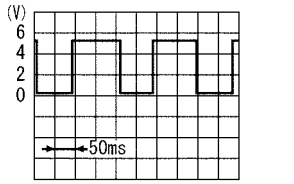 SIIA0691J
			Other than above.	0 or 5
26	P/B	Sliding switch FORWARD signal	ON (sliding switch FORWARD operation)	0
			Other than above	Battery voltage
27	W/R	Reclining switch FORWARD signal	ON (reclining switch FORWARD operation)	0
			Other than above	Battery voltage
28	BR	Front lifting switch UP signal	ON (front lifting switch UP operation)	0
			Other than above	Battery voltage
29	Y/R	Rear lifting switch UP signal	ON (rear lifting switch UP operation)	0
			Other than above	Battery voltage
31	BR	Sensor ground	—	0
32	B	Ground	—	0
33	Y	Battery power supply	—	Battery voltage
35	G	Sliding motor FORWARD output signal	Sliding switch FORWARD operation (motor operated)	Battery voltage
			Other than above	0
36	G	Reclining motor FORWARD output signal	Reclining switch FORWARD operation (motor operated)	Battery voltage
			Other than above	0
37	Y/G	Front lifter motor DOWN output signal	Front lifting switch DOWN operation (motor operated)	Battery voltage
			Other than above	0
38	B/W	Rear lifter motor UP output signal	Rear lifting switch UP operation (motor operated)	Battery voltage
			Other than above	0
39	B	Rear lifter motor DOWN output signal	Rearlifting switch DOWN operation (motor operated)	Battery voltage
			Other than above	0
40	Y/R	Battery power supply	—	Battery voltage
42	Y/R	Sliding motor BACKWARD output signal	Sliding switch BACKWARD operation (motor operated)	Battery voltage
			Other than above	0
44	GR/R	Reclining motor BACKWARD output signal	Reclining switch BACKWARD operation (motor operated)	Battery voltage
			Other than above	0
45	GR	Front lifter motor UP output signal	Front lifting switch UP operation (motor operated)	Battery voltage
			Other than above	0
48	B	Ground	—	0

Terminals and Reference Values for Automatic Drive Positioner Control Unit

EIS003XC

TERMINAL	WIRE COLOR	ITEM	CONDITION	VOLTAGE (V) (Approx.)
1	Y/G	Tilt switch signal UP	UP operation	0
			Other than above	5
2	LG/R	Changeover switch signal RH	RH position	0
			Other than above	5
3	Y/B	Mirror switch signal UP	UP position	0
			Other than above	5
4	V/W	Mirror switch signal LEFT	LEFT position	0
			Other than above	5
5	R/B	Mirror sensor signal RH VERTICAL	Door mirror RH UP or DOWN operation	Changes between 3.4 and 0.6
6	L/Y	Mirror sensor signal LH VERTICAL	Door mirror LH UP or DOWN operation	Changes between 3.4 and 0.6
7	O/L	Tilt sensor input	Tilt position TOP	2
			Tilt position BOTTOM	4
9	L/W	Power seat memory switch 1 signal	Memory switch 1 ON	0
			Memory switch 1 OFF	5
10	R	UART LINE (TX)	—	—
11	P/L	Telescopic switch signal FORWARD	FORWARD operation	0
			Other than above	5
12	O	Power seat memory switch indicator 1 signal	Memory switch 1 ON	1
			Memory switch 1 OFF	Battery voltage
13	P	Power seat memory switch indicator 2 signal	Memory switch 2 ON	1
			Memory switch 2 OFF	Battery voltage
14	GR/R	Mirror motor signal RH UP	UP operation	1.5 - Battery voltage
			Other than above	0
15	L/Y	Mirror motor signal RH LEFT	LEFT operation	1.5 - Battery voltage
			Other than above	0
16	G/B	Mirror motor signal LH DOWN	DOWN operation	1.5 - Battery voltage
			Other than above	0
		Mirror motor signal LH RIGHT	RIGHT operation	1.5 - Battery voltage
			Other than above	0
17	LG/B	Tilt switch signal DOWN	DOWN operation	0
			Other than above	5
18	L	Changeover switch signal LH	LH position	0
			Other than above	5
19	L/B	Mirror switch signal DOWN	DOWN position	0
			Other than above	5
20	BR/Y	Mirror switch signal RIGHT	RIGHT position	0
			Other than above	5
21	L/W	Mirror sensor signal RH HORIZONTAL	Door mirror RH LEFT or RIGHT operation	Changes between 3.4 and 0.6
22	G/R	Mirror sensor signal LH HORIZONTAL	Door mirror LH LEFT or RIGHT operation	Changes between 3.4 and 0.6

TERMINAL	WIRE COLOR	ITEM	CONDITION	VOLTAGE (V) (Approx.)
23	R/Y	Telescopic sensor input	Telescopic position TOP	2
			Telescopic position BOTTOM	4
24	R/B	Power seat set switch signal	Set switch ON	0
			Set switch OFF	5
25	V	Power seat memory switch 2 signal	Memory switch 2 ON	0
			Memory switch 2 OFF	5
26	R/W	UART LINE (RX)	—	—
27	G/W	Telescopic switch signal BACKWARD	BACKWARD operation	0
			Other than above	5
30	L/R	Mirror motor signal RH DOWN	DOWN operation	1.5 - Battery voltage
			Other than above	0
		Mirror motor signal RH RIGHT	RIGHT operation	1.5 - Battery voltage
			Other than above	0
31	V/R	Mirror motor signal LH UP	UP operation	1.5 - Battery voltage
			Other than above	0
32	BR	Mirror motor signal LH LEFT	LEFT operation	1.5 - Battery voltage
			Other than above	0
33	W/L	Sensor power supply	—	5
34	W	Battery power supply (FUSE)	—	Battery voltage
35	G/Y	Tilt motor signal UP	UP operation	Battery voltage
			Other than above	0
36	R	Telescopic motor signal FORWARD	FORWARD operation	Battery voltage
			Other than above	0
39	W/R	Battery power supply (PTC)	—	Battery voltage
40	B	Ground	—	0
41	Y/G	Sensor ground	—	0
42	G/W	Tilt motor DOWN signal	DOWN operation	Battery voltage
			Other than above	0
44	G	Telescopic motor signal BACKWARD	BACKWARD operation	Battery voltage
			Other than above	0
48	B	Ground	—	0

Terminals and Reference Values for BCM

EIS003XD

Terminal	Wire Color	Item	Condition	Voltage (V) (Approx.)
11	V	Ignition switch (ACC or ON)	Ignition switch (ACC or ON position)	Battery voltage
37	B/R	Ignition key switch (insert)	Key inserted → Key removed from key cylinder	Battery voltage → 0V
38	R/W	Ignition switch (ON or START)	Ignition switch (ON or START position)	Battery voltage
52	B	Ground	—	—
55	W/B	Battery power supply	—	Battery voltage
62	SB	Front door switch LH	Door Close (OFF) → Open (ON)	Battery voltage → 0V

Trouble Diagnosis

EIS003XE

WORK FLOW

1. Check the symptom and customer's requests.
2. Understand the system description. Refer to SE-12, "System Description" .
3. Perform the preliminary check, refer to SE-33, "PRELIMINARY CHECK" .
4. Check the self-diagnosis, results using CONSULT-II refer to SE-38, "Self-diagnosis Results" .
5. Repair or replace depending on the self-diagnostic results.
6. Based on the trouble diagnosis chart, repair or replace the cause of the malfunction. Refer to SE-41, "SYMPTOM CHART" .
7. Does the automatic drive positioner system operate normally?
   If it is normal, GO TO 8.
   If it is not normal, GO TO 3.
8. Inspection end.

PRELIMINARY CHECK

Setting Change Function

The settings of the automatic driving position system can be changed, using CONSULT-II.

×: Applicable –: Not applicable

Setting item	Content	CONSULT–II (WORK SUPPORT)	Display unit	Default setting	Factory setting
SEAT SLIDE VOLUME SEAT	The distance at retain operation can be selected from the following 3 modes.	40mm	—	×	×
		80mm		—	—
		150mm		—	—
Sliding Driver Seat and Steering Wheel Raise When Entry/ Exiting Vehicle	The seat sliding and steering wheel raise exiting and entry at entry/exit can be selected: ON (operated)–OFF (not operated)	ON	ON: Indicator lamp ON	—	×
		OFF	OFF: Indicator lamp OFF	×	—
Reset custom settings*	All settings to default.	—	Default: Setting button ON	—	—

It is possible to set sliding driver seat and steering wheel raise for entry/exit of vehicle by pressing set switch.

Content	Setting change operation	Indicator LEDs
The seat sliding and steering wheel raise turnout and return at entry/exit can be operated.	Press the set switch for than 10 seconds	Blinking twice
The seat sliding and steering wheel raise turnout and return at entry/exit can be not operated.		Blinking once

*: Setting of sliding driver seat and steering wheel raise for entry/exit of vehicle is ON at factory-shipment. But if custom settings are reset, setting turns OFF.

NOTE:

- After the setting is registered, the new setting is effective, even if the battery is disconnected.
- If setting change function cannot be set with CONSULT-II or display, refer to SE-36, "CONSULT-II FUNCTION (AUTO DRIVE POS.)" .
- If setting change function cannot be set with set switch, refer to SE-70, "SEAT MEMORY SWITCH CIRCUIT INSPECTION" .

BCM Power Supply and Ground Circuit Inspection

1. FUSE INSPECTION

Check the following fuses and fusible link in the fuse block (J/B) and fuse and fusible link box.

Unit	Terminal No.	Signal name	No.	Location
BCM	55	Battery power supply	**f**	Fuse and fuslible link box
	11	Ignition ACC or ON power supply	6	Fuse block (J/B)
	38	Ignition ON or START power supply	1	Fuse block (J/B)

OK or NG

OK >> GO TO 2.
NG >> Replace the fuse or fusible link.

2. BCM POWER SUPPLY CIRCUIT INSPECTION

Disconnect BCM connector, and connect vehicle-side connector terminals shown below to positive probe and body ground to negative probe. Measure voltage.

Unit	Terminal No.	Signal name	Ignition switch	Voltage
BCM	55	Battery power supply	—	Battery voltage
	11	Ignition ACC or ON power supply	ACC or ON	Battery voltage
	38	Ignition ON or START power supply	ON or START	Battery voltage

OK or NG

OK >> GO TO 3.
NG >> Repair or replace harness.

3. BCM GROUND CIRCUIT INSPECTION

Check continuity between BCM vehicle-side connector and body ground.

Unit	Terminal No.	Signal name	Ignition switch	Continuity
BCM	52	Ground	—	Yes

OK or NG

OK >> Power supply and ground circuits are normal.
NG >> Repair or replace harness.

DRIVER SEAT CONTROL UNIT AND AUTOMATIC DRIVE POSITIONER CONTROL UNIT POWER SUPPLY AND GROUND CIRCUIT INSPECTION

1. FUSE INSPECTION

Make sure none of the following fuses or fusible link for the driver seat control unit and automatic drive positioner control unit are blown.

Unit	Power source	Fuse No.
Driver seat control unit and automotive drive positioner control unit	ON or START power supply	9 (10A)
	Battery power supply	3 (10A)
		f (50A)

NOTE:
Refer to SE-11, "Component Parts and Harness Connector Location" .

OK or NG

OK >> GO TO 2.
NG >> If fuse is blown, be sure to eliminate cause of malfunction before installing new fuse. Refer to SE-11, "Component Parts and Harness Connector Location" .

2. CHECK DRIVER SEAT CONTROL UNIT POWER SUPPLY CIRCUIT

1. Disconnect driver seat control unit.
2. Check voltage between driver seat control unit and ground.

Connector	Terminals (Wire color)		Power source	Condition	Voltage (V) (Approx.)
	(+)	(–)			
P3	33 (Y), 40 (Y/R)	Ground	Battery power supply	Ignition switch OFF	Battery voltage
P2	6 (B/W)	Ground	START power supply	Ignition switch START	Battery voltage

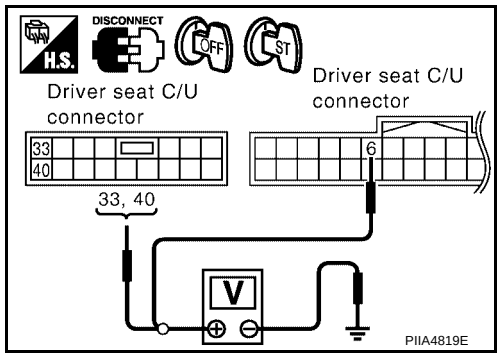

OK or NG

OK >> GO TO 3.
NG >> Check harness for open and short between driver seat control unit and fuse block (J/B).

3. CHECK DRIVER SEAT CONTROL UNIT GROUND CIRCUIT

1. Turn ignition switch OFF.
2. Check continuity between the driver seat control unit connector P2 terminal 32, P3 terminal 48 and ground.

32 (B) – Ground : Continuity should exist.
48 (B) – Ground : Continuity should exist.

OK or NG

OK >> GO TO 4.
NG >> Repair or replace harness.

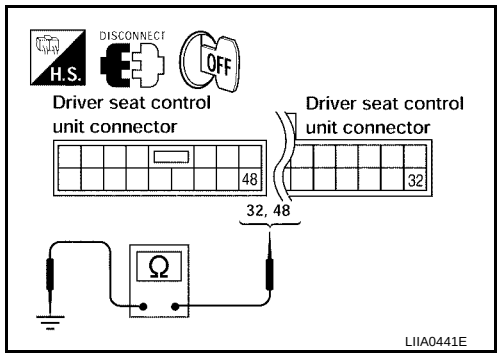

4. CHECK AUTOMATIC DRIVE POSITIONER CONTROL UNIT POWER SUPPLY CIRCUIT

1. Disconnect automatic drive positioner control unit.
2. Check voltage between automatic drive positioner control unit connector M42 terminal 34, 39 and ground.

34 (W) – Ground : Battery voltage
39 (W/R) – Ground : Battery voltage

OK or NG

OK >> GO TO 5.
NG >> Repair or replace harness.

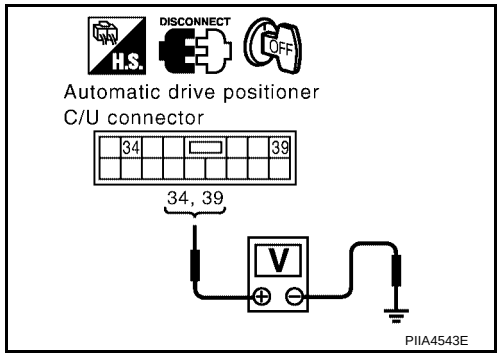

5. CHECK AUTOMATIC DRIVE POSITIONER CONTROL UNIT GROUND CIRCUIT

Check continuity between the automatic drive positioner control unit connector M42 terminal 40, 48 and ground.

40 (B) – Ground : Continuity should exist.
48 (B) – Ground : Continuity should exist.

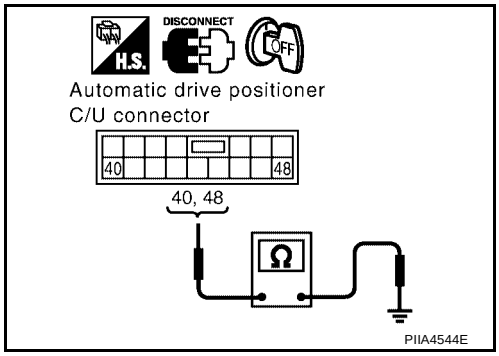

OK or NG

OK >> Automatic drive positioner control unit circuit is OK.
NG >> Repair or replace harness.

CONSULT-II FUNCTION (AUTO DRIVE POS.)

CONSULT-II can display each diagnostic item using the diagnostic test modes shown following.

AUTO DRIVE POS. diagnostic mode	Description
WORK SUPPORT	Supports inspections and adjustments. Commands are transmitted to the driver seat control unit for setting the status suitable for required operation, input/output signals are received from the driver seat control unit and received data is displayed.
SELF-DIAG RESULTS	Displays driver seat control unit self-diagnosis results.
DATA MONITOR	Displays driver seat control unit input/output data in real time.
CAN DIAG SUPPORT MNTR	The result of transmit/receive diagnosis of CAN communication can be read.
ACTIVE TEST	Operation of electrical loads can be checked by sending drive signal to them.
ECU PART NUMBER	Driver seat control unit part number can be read.

CONSULT-II Inspection Procedure

CAUTION:

If CONSULT-II is used with no connection of CONSULT-II CONVERTER, malfunctions might be detected in self-diagnosis depending on control unit which carries out CAN communication.

1. Turn ignition switch OFF.
2. Connect CONSULT-II and CONSULT-II CONVERTER to the data link connector.
3. Turn ignition switch ON.

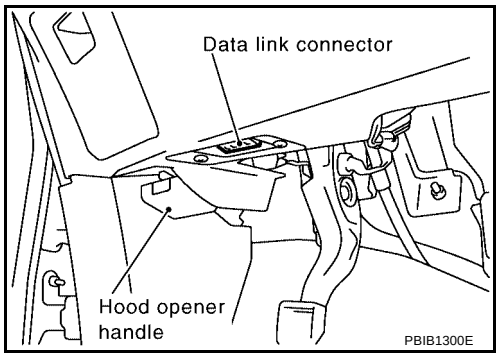

4. Touch “START (NISSAN BASED VHCL)”.

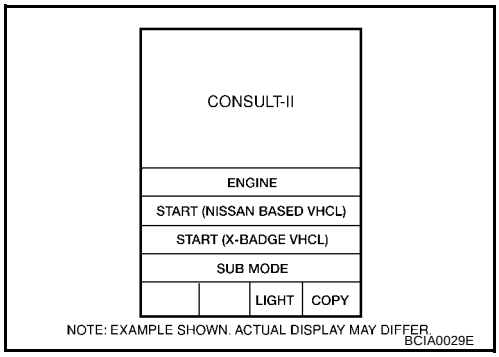

5. Touch “AUTO DRIVE POS”.
If “AUTO DRIVE POS.” is not indicated, refer to GI-37, "CONSULT-II Data Link Connector (DLC) Circuit" .

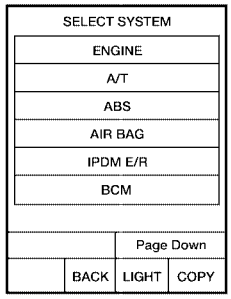

NOTE: EXAMPLE SHOWN. ACTUAL DISPLAY MAY DIFFER.
BCIA0030E

6. Select diagnosis mode.
“DATA MONITOR”, “ACTIVE TEST”, “SELF-DIAG RESULTS“, “ECU PART NUMBER” and “WORK SUPPORT” are available.

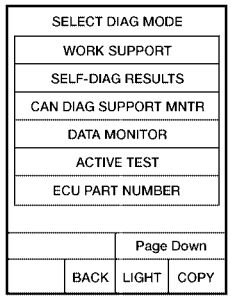

NOTE: EXAMPLE SHOWN. ACTUAL DISPLAY MAY DIFFER.
BCIA0031E

Self-diagnosis Results

DISPLAY ITEM LIST

CONSULT-II display	Item	Malfunction is detected when...	Reference page
CAN COMM CIRC [U1000]	CAN communication	Malfunction is detected in CAN communication.	SE-40
SEAT SLIDE [B2112]	Seat slide motor	When any manual and automatic operations are not performed, if any motor operations of seat slide is detected for 0.1 second or more, status is judged “Output error”.	SE-43 SE-55
SEAT RECLNING [B2113]	Seat reclining motor	When any manual and automatic operations are not performed, if any motor operations of seat reclining is detected for 0.1 second or more, status is judged “Output error”.	SE-44 SE-56
SEAT LIFTER-FR [B2114]	Seat lifting FR motor	When any manual and automatic operations are not performed, if any motor operations of seat lifting FR is detected for 0.1 second or more, status is judged “Output error”.	SE-46 SE-57
SEAT LIFTER-RR [B2115]	Seat lifting RR motor	When any manual and automatic operations are not performed, if any motor operations of seat lifting RR is detected for 0.1 second or more, status is judged “Output error”.	SE-47 SE-58
STEERING TILT [B2116]	Steering tilt motor	When any manual and automatic operations are not performed, if any motor operations of tilt is detected for 0.1 second or more, status is judged “Output error”.	SE-52
TELESCO MOTOR [B2117]	Steering telescopic motor	When any manual and automatic operations are not performed, if any motor operations of tilt is detected for 0.1 second or more, status is judged “Output error”.	SE-52
TILT SENSOR [B2118]	Steering tilt sensor	When steering tilt sensor detects 0.5V or lower, or 4.5V or higher, for 0.5 seconds or more.	SE-65
STEERING TELE-SCO SENSOR [B2119]	Steering telescopic sensor	When steering telescopic sensor detects 0.5V or lower, or 4.5V or higher, for 0.5 seconds or more.	SE-65
DETENT SW [B2126]	Detent SW	With the A/T selector lever in P position (Detent switch OFF), if the vehicle speed of 7 km/h (4 MPH) or higher was input the detent switch input system is judged malfunctioning.	SE-62
PARKING BRAKE [B2127]	Parking brake	With parking brake use (Parking brake switch ON), if a vehicle speed of 7 km/h (4 MPH) or higher is input, the parking brake switch input system is judged malfunctioning.	SE-63
UART COMM [B2128]	UART communica-tion	Malfunction is detected in UART communication.	SE-93

NOTE:

- Parking brake malfunction will be detected when starting vehicle on grade or driving without releasing parking brake.
- The displays of CAN communication and detection switch display error detecting condition from memory erase to the present on “TIME”.
- If error is detected in the past and present error is detected, “CRNT” is displayed.
- If error is detected in the past and present error is not detected, “PAST” is displayed.
- If error has never been detected, nothing is displayed on “TIME”.
- Any items other than CAN communication and detection switch count error detection frequency occurred after erase history to “1-127”.
- If error was detected in the past, error detection frequency from memory erase to the present is displayed on “TIME”.
- If error has never been detected, nothing is displayed on “TIME”.
- Can clear the detected memory.
- Normal: Clear memory in normal condition, history is erased and nothing is displayed on “TIME”.
- Error: Clear memory in error condition, error is detected again and “1” is displayed on “TIME”.

Data Monitor

CAN DIAGNOSIS SUPPORT MONITOR

Monitor item [UNIT]		Contents
CAN COMM	[OK/NG]	When CAN communication circuit is malfunctioning, it displays “NG”.
INITIAL DIAG	[OK/UNKWN]	Displays [OK/UNKWN] condition of the CAN communication judged by signal input.
TRANSMIT DIAG	[OK/UNKWN]	Displays [OK/UNKWN] condition of the CAN communication judged by signal input.
ECM	[OK/UNKWN]	Displays [OK/UNKWN] condition of the CAN communication judged by signal input.
IPDM E/R	[OK/UNKWN]	Displays [OK/UNKWN] condition of the CAN communication judged by signal input.

SELECTIOM FROM MEMU

Monitor item [OPERATION or UNIT]		Contents
SLIDE SW–FR	“ON/OFF”	ON/OFF status judged from the sliding switch (FR) signal is displayed.
SLIDE SW–RR	“ON/OFF”	ON/OFF status judged from the sliding switch (RR) signal is displayed.
RECLN SW–FR	“ON/OFF”	ON/OFF status judged from the reclining switch (FR) signal is displayed.
RECLIN SW–RR	“ON/OFF”	ON/OFF status judged from the reclining switch (RR) signal is displayed.
LIFT FR SW–UP	“ON/OFF”	ON/OFF status judged from the FR lifting switch (UP) signal is displayed.
LIFT FR SW–DN	“ON/OFF”	ON/OFF status judged from the FR lifting switch (DOWN) signal is displayed.
LIFT RR SW–UP	“ON/OFF”	ON/OFF status judged from the RR lifting switch (UP) signal is displayed.
LIFT RR SW–DN	“ON/OFF”	ON/OFF status judged from the RR lifter switch (DOWN) signal is displayed.
MIR CON SW–UP	“ON/OFF”	ON/OFF status judged from the door mirror remote control switch (UP) signal is displayed.
MIR CON SW–DN	“ON/OFF”	ON/OFF status judged from the door mirror remote control switch (DOWN) signal is displayed.
MIR CON SW–RH	“ON/OFF”	ON/OFF status judged from the door mirror remote control switch (RIGHT) signal is displayed.
MIR CON SW–LH	“ON/OFF”	ON/OFF status judged from the door mirror remote control switch (LEFT) signal s displayed.
MIR CHNG SW–R	“ON/OFF”	ON/OFF status judged from the door mirror remote control switch (switching to RIGHT) signal is displayed.
MIR CHNG SW–L	“ON/OFF”	ON/OFF status judged from the door mirror remote control switch (switching to LEFT) signal is displayed.
SET SW	“ON/OFF”	ON/OFF status judged from the setting switch signal is displayed.
TILT SW-UP	“ON/OFF”	ON/OFF status judged from the tilt adjusting switch (UP) signal is displayed.
TELESCO SW-FR	“ON/OFF”	ON/OFF status judged from the telescopic adjusting switch (FR) signal is displayed.
MEMORY SW1	“ON/OFF”	ON/OFF status judged from the seat memory switch 1 signal is displayed.
MEMORY SW2	“ON/OFF”	ON/OFF status judged from the seat memory switch 2 signal is displayed.
DETENT SW	“ON/OFF”	The selector lever position “ON (P position) / OFF (other than P position)” judged from the detention switch signal is displayed.
STARTER SW	“ON/OFF”	Ignition key switch ON (START, ON) /OFF (ignition switch IGN, ACC, or OFF) status judged from the ignition switch signal is displayed.
SLIDE PULSE	—	Value (32768) when battery connects is as standard. If it moves forward, the value increases. If it moves backward, the value decreases.
RECLN PULSE	—	Value (32768) when battery connects is as standard. If it moves forward, the value increases. If it moves backward, the value decreases.
LIFT FR PULSE	—	Value (32768) when battery connects is as standard. If it moves forward, the value increases. If it moves backward, the value decreases.

Monitor item [OPERATION or UNIT]		Contents
LIFT RR PULSE	—	Value (32768) when battery connects is as standard. If it moves forward, the value increases. If it moves backward, the value decreases.
MIR/SEN RH R–L	“ON/OFF”	Voltage output from LH door mirror sensor (LH/RH) is displayed.
MIR/SEN RH U–D	“ON/OFF”	Voltage output from LH door mirror sensor (UP/DOWN) is displayed.
MIR/SEN LH R–L	“ON/OFF”	Voltage output from RH door mirror sensor (LH/RH) is displayed.
MIR/SEN LH U–D	“ON/OFF”	Voltage output from RH door mirror sensor (Up/DOWN) is displayed.
PARK BRAKE SW	“ON/OFF”	“ON/OFF” status from the parkng brake switch signal is displayed.

Active Test

CAUTION:

During vehicle driving, it does not perform active test.

NOTE:

If active test is performed, reset seat memory and key fob interlock drive positioner after performing work.

DISPLAY ITEM LIST

Test item	Description
SEAT SLIDE	The sliding motor is activated by receiving the drive signal.
SEAT RECLINING	The reclining motor is activated by receiving the drive signal.
SEAT LIFTER FR	The front lifter motor is activated by receiving the drive signal.
SEAT LIFTER RR	The rear lifter motor is activated by receiving the drive signal.
MEMORY SW INDCTR	The memory switch indicator is lit by receiving the drive signal.
MIRROR MOTOR RH	The RH mirror motor moves the mirror UP/DOWN and LEFT/RIGHT by receiving the drive signal.
MIRROR MOTOR LH	The LH mirror motor moves the mirror UP/DOWN and LEFT/RIGHT by receiving the drive signal.

CAN COMMUNICATION INSPECTION USING CONSULT-II (SELF-DIAGNOSIS)

1. SELF-DIAGNOSTIC RESULT CHECK

CAUTION:

If CONSULT-II is used with no connection of CONSULT-II CONVERTER, malfunctions might be detected in self-diagnosis depending on control unit which carry out CAN communication.

1. Connect to CONSULT-II and select "AUTO DRIVE POS" on the "SELECT DIAG SYSTEM" screen.
2. Select "SELF-DIAG RESULTS" on "SELECT DIAG MODE" screen.
3. Check display content in self-diagnostic results.

CONSULT-II display code	Diagnostic item
U1000	INITIAL DIAG
	TRANSMIT DIAG
	ECM
	IPDM E/R
	METER/M&A

Contents diplayed.

No malfunction>>Inspection end.

Malfunction in CAN communication system>>After printing the monitor items, go to “CAN System”. Refer to LAN-7, "CAN COMMUNICATION" .

SYMPTOM CHART

Symptom	Diagnoses / service procedure	Refer to page
A part of seat system does not operate (both automatically and manually).	1. Sliding motor circuit inspection	SE-43
	2. Reclining motor circuit inspection	SE-44
	3. Front lifter motor circuit inspection	SE-46
	4. Rear lifter motor circuit inspection	SE-47
	5. If the above systems are normal, replace the driver seat control unit.	—
A part of door mirror does not operate (both automatically and manually).	1. Mirror motor LH circuit check	SE-49
	2. Mirror motor RH circuit check	SE-50
	3. If the above systems are normal, replace the automatic drive positioner control unit.	—
A part of seat system does not operate (only automatic operation).	1. Sliding sensor circuit inspection	SE-55
	2. Reclining sensor circuit inspection	SE-56
	3. Front lifting sensor circuit inspection	SE-57
	4. Rear lifting sensor circuit inspection	SE-58
	5. If the above systems are normal, replace the driver seat control unit.	—
A part of door mirror system does not operate (only automatic operation).	1. Mirror sensor LH circuit check	SE-59
	2. Mirror sensor RH circuit check	SE-61
	3. If the above systems are normal, replace the automatic drive positioner control unit.	—
All the automatic operations do not operate.	1. Detention switch circuit inspection	SE-62
	2. Key switch and key lock solenoid circuit inspection	SE-67
	3. UART communication line circuit inspection	SE-93
	4. Tilt sensor circuit inspection	SE-66
	5. Telescopic sensor circuit inspection	SE-65
	6. If all the above systems are normal, replace the automatic drive positioner control unit.	–
A part of seat system does not operate (only manual operation).	1. Sliding switch circuit inspection	SE-72
	2. Reclining switch circuit inspection	SE-73
	3. Front lifting switch circuit inspection	SE-75
	4. Rear lifting switch circuit inspection	SE-76
	5. If the above systems are normal, replace the driver seat control unit.	–
Seat function does not operate (only automatic operation).	1. Seat sensor power supply and ground inspection	SE-42
	2. Sliding sensor circuit inspection	SE-55
	3. Reclining sensor circuit inspection	SE-56
	4. Front lifting sensor circuit inspection	SE-57
	5. Rear lifting sensor circuit inspection	SE-58
	6. If the above systems are normal, replace the driver seat control unit.	–
A part of door mirror does not operate (only manual operation).	1. Door mirror remote control switch (change over switch) circuit inspection	SE-78
	2. Door mirror remote control switch (mirror switch) switching circuit inspection	SE-80
	3. If the above systems are normal, replace the automatic drive positioner control unit.	—

Symptom	Diagnoses / service procedure	Refer to page
Only memory switch operation.	1. Seat memory switch circuit inspection	SE-70
	2. If the above systems are normal, replace the driver seat control unit.	—
Seat memory indicator lamps 1 and 2 do not illuminate.	1. Seat memory indicator lamp circuit inspection	SE-91
	2. If all the above systems are normal, replace the driver seat control unit.	–
The Entry/Exiting does not operate when door is opened and closed. (The Entry/Exiting operates with key switch)	1. Front door switch LH circuit inspection	SE-69
	2. If all the above systems are normal, replace the BCM.	–
The key fob interlock function does not operate	1. Key fob interlock function inspection	BL-39
	2. If all the above systems are normal, replace the BCM	BCS-20
Only seat system does not operate (only manual operation).	1. Power seat switch ground circuit inspection	SE-77

SEAT SENSOR POWER SUPPLY AND GROUND INSPECTION

1. CHECK SEAT SENSOR HARNESS CONTINUITY

1. Turn ignition switch OFF.
2. Disconnect driver seat control unit and seat motor assembly.
3. Check continuity between driver seat control unit connector P2 terminals 16, 31 and seat motor assembly P4 terminals 2, 4.

   16 (B/Y) – 2 (B/Y) : Continuity should exist.
   31 (BR) – 4 (BR) : Continuity should exist.

4. Check continuity between driver seat control unit connector P2 terminals 16, 31 and ground.

   16 (B/Y) – Ground : Continuity should not exist.
   31 (BR) – Ground : Continuity should not exist.

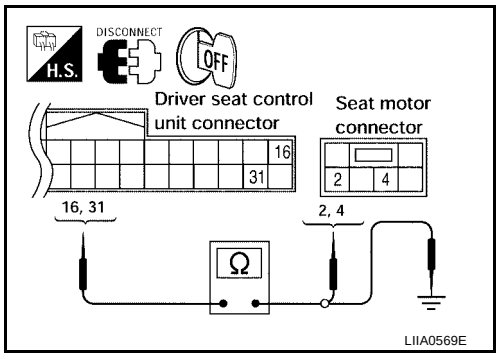

OK or NG

OK >> GO TO 2.
NG >> Repair or replace harness.

2. CHECK SEAT SENSOR POWER SUPPLY

1. Connect driver seat control unit.
2. Turn ignition switch ON.
3. Check voltage between driver seat control unit connector P2 terminal 16 and ground.

   16 (B/Y) – Ground : Battery voltage.

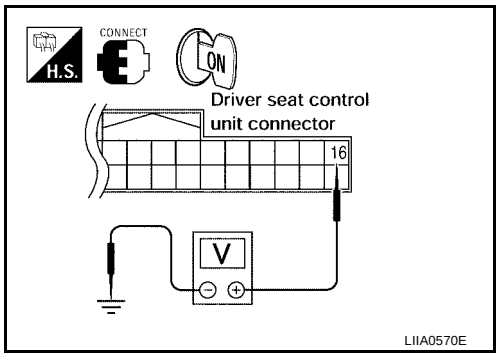

OK or NG

OK >> GO TO 3.
NG >> Replace driver seat control unit.

3. CHECK SEAT SENSOR GROUND CIRCUIT

1. Turn ignition switch OFF.
2. Check continuity between driver seat control unit connector P2 terminal 31 and ground.

31 (BR) – Ground : Continuity should not exist.

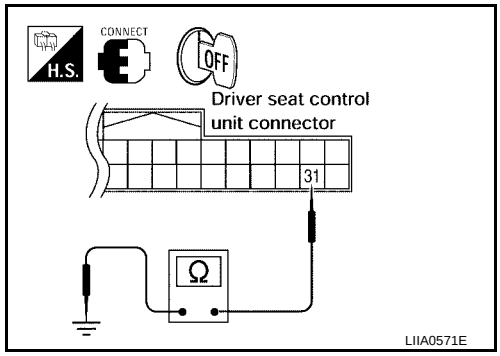

OK or NG

OK >> Check the condition of the harness and connector.
NG >> Replace driver seat control unit.

SLIDING MOTOR CIRCUIT INSPECTION

1. CHECK SEAT SLIDING MECHANISM

Check the following.

- Operation malfunction caused by sliding rail deformation or pinched harness or other foreign materials
- Operation malfunction caused by foreign materials adhered to the sliding motor or sliding rail connector rod
- Operation malfunction and interference with other parts by poor installation

OK or NG

OK >> GO TO 2.
NG >> Repair the malfunctioning part and check again.

2. CHECK FUNCTION

With CONSULT-II

Check operation with “SEAT SLIDE” in ACTIVE TEST.

Test item	Description
SEAT SLIDE	The sliding motor is activated by receiving the drive signal.

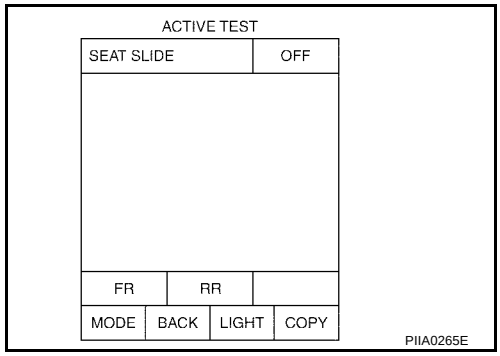

Without CONSULT-II

GO TO 3.

OK or NG

OK >> Sliding motor circuit is OK.
NG >> GO TO 3.

3. CHECK SLIDING MOTOR HARNESS CONTINUITY

1. Turn ignition switch OFF.
2. Disconnect driver seat control unit and sliding motor.
3. Check continuity between driver seat control unit connector P3 terminals 35, 42 and sliding motor connector P4 terminals 1, 5.

   35 (G) – 1 (G) : Continuity should exist.
   42 (Y/R) – 5 (Y/R) : Continuity should exist.

4. Check continuity between driver seat control unit connector P3 terminals 35, 42 and ground.

   35 (G) – Ground : Continuity should not exist.
   42 (Y/R) – Ground : Continuity should not exist.

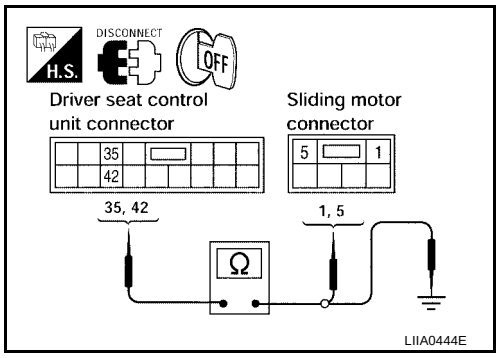

OK or NG

OK >> GO TO 4.
NG >> Repair or replace harness.

4. CHECK DRIVER SEAT CONTROL UNIT OUTPUT SIGNAL

1. Connect the driver seat control unit and sliding motor.
2. Check voltage between driver seat control unit connector and ground.

Connector	Terminals (Wire color)		Condition	Voltage (V) (Approx.)
	(+)	(–)		
P3	35 (G)	Ground	Sliding switch ON (FORWARD operation)	Battery voltage
			Other than above	0
	42 (Y/R)		Sliding switch ON (BACKWARD operation)	Battery voltage
			Other than above	0

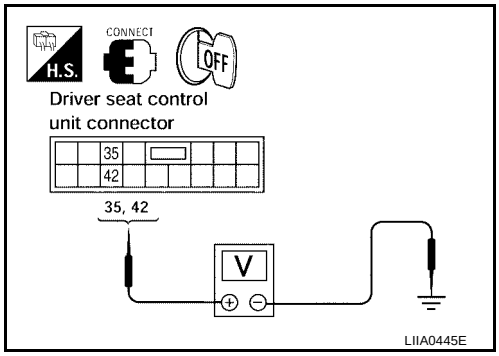

OK or NG

OK >> Replace sliding motor.
NG >> Replace driver seat control unit.

RECLINING MOTOR CIRCUIT INSPECTION

1. CHECK SEAT RECLINING MECHANISM

Check the following.

- Operation malfunction caused by an interference with the center pillar or center console
- Operation malfunction and interference with other parts by poor installation

OK or NG

OK >> GO TO 2.
NG >> Repair the malfunctioning part and check again.

2. CHECK FUNCTION

With CONSULT-II

Check operation with “SEAT RECLINING” in ACTIVE TEST.

Test item	Description
SEAT RECLINING	The reclining motor is activated by receiving the drive signal.

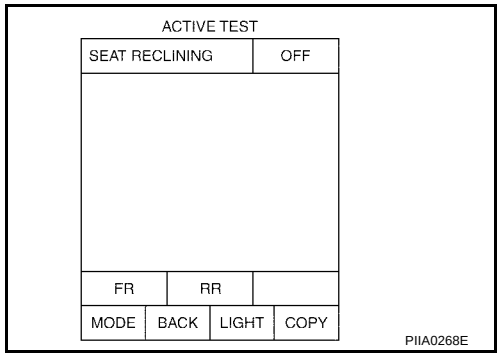

Without CONSULT-II

GO TO 3.

OK or NG

OK >> Reclining motor circuit is OK.
NG >> GO TO 3.

3. CHECK RECLINING MOTOR HARNESS CONTINUITY

1. Turn ignition switch OFF.
2. Disconnect driver seat control unit and reclining motor.
3. Check continuity between driver seat control unit connector P3 terminals 36, 44 and reclining motor connector P5 terminals 6, 8.

   36 (G) – 6 (G) : Continuity should exist.
   44 (GR/R) – 8 (GR/R) : Continuity should exist.

4. Check continuity between driver seat control unit connector P3 terminals 36, 44 and ground.

   36 (G) – Ground : Continuity should not exist.
   44 (GR/R) – Ground : Continuity should not exist.

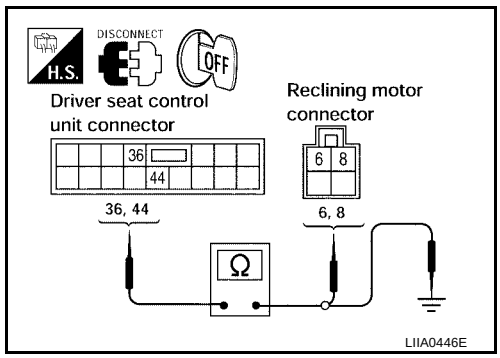

OK or NG

OK >> GO TO 4.
NG >> Repair or replace harness.

4. CHECK DRIVER SEAT CONTROL UNIT OUTPUT SIGNAL

1. Connect the driver seat control unit and reclining motor.
2. Check voltage between driver seat control unit connector and ground.

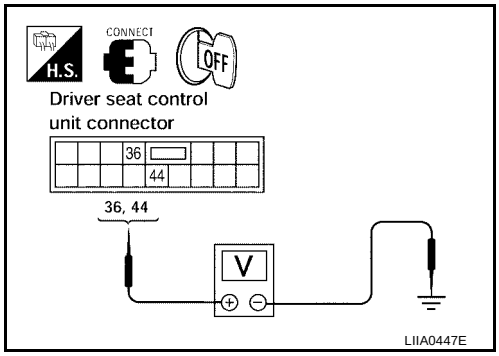

Connector	Terminals (Wire color)		Condition	Voltage (V) (Approx.)
	(+)	(–)		
P3	36 (G)	Ground	Reclining switch ON (FORWARD operation)	Battery voltage
			Other than above	0
	44 (GR/R)		Reclining switch ON (BACKWARD operation)	Battery voltage
			Other than above	0

OK or NG

OK >> Replace reclining motor.
NG >> Replace driver seat control unit.

FRONT LIFTER MOTOR CIRCUIT INSPECTION

1. CHECK FRONT SEAT LIFTING MECHANISM

Check the following.

- Operation malfunction caused by lifter mechanism deformation or pinched harness or other foreign materials
- Operation malfunction caused by foreign materials adhered to the lifter motor or lead screws
- Operation malfunction and interference with other parts by installation

OK or NG

OK >> GO TO 2.
NG >> Repair the malfunctioning part and check again.

2. CHECK FUNCTION

With CONSULT-II

Check operation with “SEAT LIFTER FR” in ACTIVE TEST.

Test item	Description
SEAT LIFTER FR	The front lifter motor is activated by receiving the drive signal.

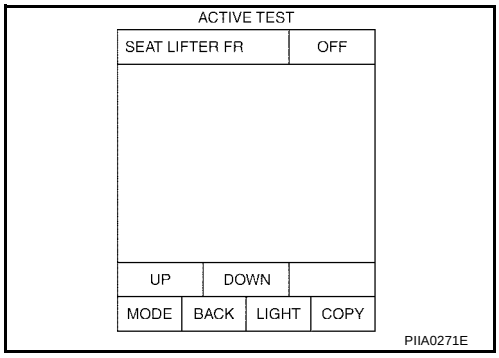

Without CONSULT-II

GO TO 3.

OK or NG

OK >> Front lifter motor circuit is OK.
NG >> GO TO 3.

3. CHECK FRONT LIFTER MOTOR HARNESS CONTINUITY

1. Turn ignition switch OFF.
2. Disconnect driver seat control unit connector and front lifter motor connector.
3. Check continuity between driver seat control unit connector P3 terminals 37, 45 and front lifter motor connector P6 terminals 9, 11.

37 (Y/G) – 11 (Y/G) : Continuity should exist.
45 (GR) – 9 (GR) : Continuity should exist.

4. Check continuity between driver seat control unit connector P3 terminals 37, 45 and ground.

37 (Y/G) – Ground : Continuity should not exist.
45 (GR) – Ground : Continuity should not exist.

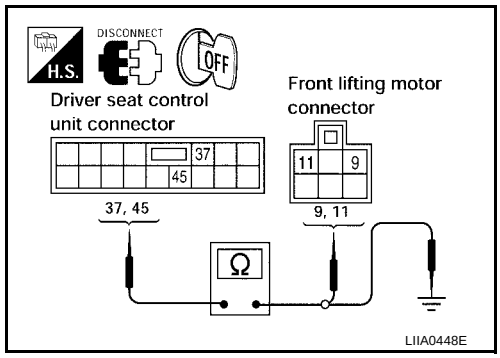

OK or NG

OK >> GO TO 4.
NG >> Repair or replace harness.

4. CHECK DRIVER SEAT CONTROL UNIT OUTPUT SIGNAL

1. Connect the driver seat control unit and front lifter motor.
2. Check voltage between driver seat control unit connector and ground.

Connector	Terminals (Wire color) (+)	Terminals (Wire color) (–)	Condition	Voltage (V) (Approx.)
P3	45 (GR)	Ground	Front lifting switch ON (UP operation)	Battery voltage
			Other than above	0
	37 (Y/G)		Front lifting switch ON (DOWN operation)	Battery voltage
			Other than above	0

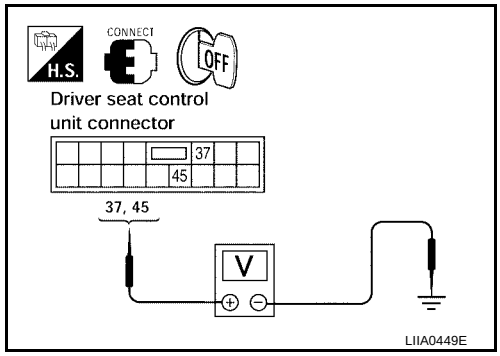

OK or NG

OK >> Replace front lifter motor.
NG >> Replace driver seat control unit.

REAR LIFTING MOTOR CIRCUIT INSPECTION

1. CHECK REAR SEAT LIFTING MECHANISM

Check the following.

- Operation malfunction caused by lifter mechanism deformation or pinched harness or other foreign materials
- Operation malfunction caused by foreign materials adhered to the lifter motor or lead screws
- Operation malfunction and interference with other parts by poor installation

OK or NG

OK >> GO TO 2.
NG >> Repair the malfunctioning part and check again.

2. CHECK FUNCTION

With CONSULT-II

Check operation with “SEAT LIFTER RR” in ACTIVE TEST.

Test item	Description
SEAT LIFTER RR	The rear lifter motor is activated by receiving the drive signal.

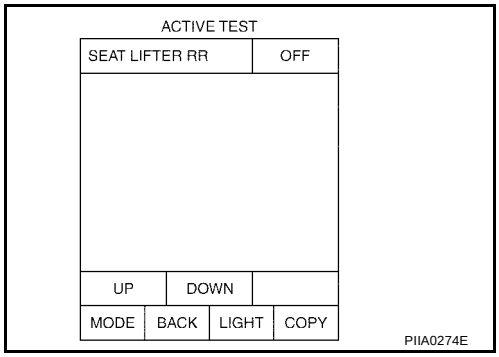

Without CONSULT-II

GO TO 3.

OK or NG

OK >> Rear lifter motor circuit is OK.
NG >> GO TO 3.

3. CHECK REAR LIFTER MOTOR HARNESS CONTINUITY

1. Turn ignition switch OFF.
2. Disconnect driver seat control unit and rear lifter motor.
3. Check continuity between driver seat control unit connector P3 terminals 38, 39 and lifter motor connector P7 terminals 12, 14.

   38 (B/W) – 12 (B/W) : Continuity should exist.
   39 (B) – 14 (B) : Continuity should exist.

4. Check continuity between driver seat control unit P3 terminals 38, 39 and ground.

   38 (B/W) – Ground : Continuity should not exist.
   39 (B) – Ground : Continuity should not exist.

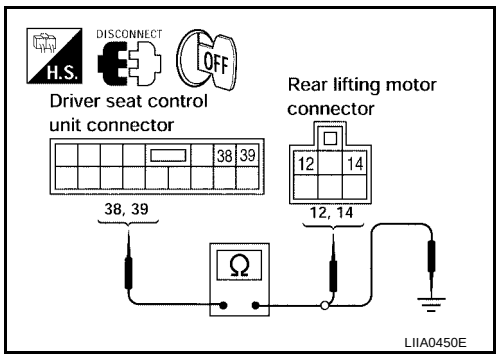

OK or NG

OK >> GO TO 4.
NG >> Repair or replace harness.

4. CHECK DRIVER SEAT CONTROL UNIT OUTPUT SIGNAL

1. Connect the driver seat control unit and rear lifter motor.
2. Check voltage between driver seat control unit connector and ground.

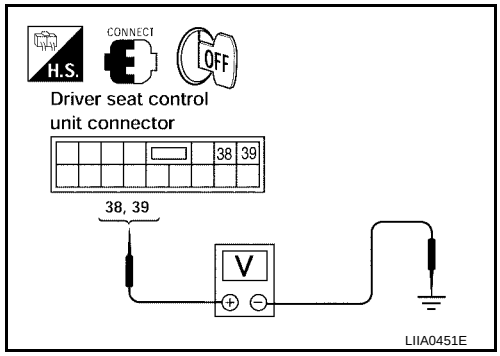

Connector	Terminals (Wire color)		Condition	Voltage (V) (Approx.)
	(+)	(–)		
P3	38 (B/W)	Ground	Rear lifting switch ON (UP operation)	Battery voltage
			Other than above	0
	39 (B)		Rear lifting switch ON (DOWN operation)	Battery voltage
			Other than above	0

OK or NG

OK >> Replace rear lifter motor.
NG >> Replace driver seat control unit.

MIRROR MOTOR LH CIRCUIT INSPECTION

1. CHECK MIRROR MOTOR LH MECHANISM

Check the following.

- Operation malfunction caused by lifter mechanism deformation or pinched harness or other foreign materials
- Operation malfunction caused by foreign materials adhered to the mirror motor or lead screws
- Operation malfunction and interference with other parts by poor installation

OK or NG

OK >> GO TO 2.
NG >> Repair the malfunctioning part and check again.

2. CHECK FUNCTION

With CONSULT-II

Check operation with "MIRROR MOTOR LH" in ACTIVE TEST.

Test item	Description
MIRROR MOTOR LH	The mirror motor LH is activated by receiving the drive signal.

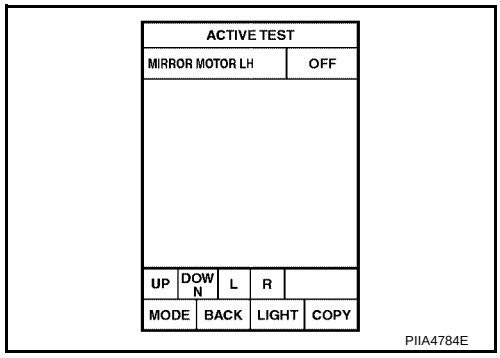

Without CONSULT-II

GO TO 3.

OK or NG

OK >> Mirror motor LH circuit is OK.
NG >> GO TO 3.

3. CHECK MIRROR MOTOR LH HARNESS CONTINUITY

1. Turn ignition switch OFF.
2. Disconnect automatic drive positioner control unit and door mirror LH.
3. Check continuity between automatic drive positioner control unit connector M41 terminals 16, 31, 32 and door mirror LH connector D4 terminals 8, 9, 10.

16 (G/B) – 8 (G/B) : Continuity should exist.
31 (V/R) – 10 (V/R) : Continuity should exist.
32 (BR) – 9 (BR) : Continuity should exist.

4. Check continuity between automatic drive positioner control unit connector M41 terminals 16, 31, 32 and ground.

16 (G/B) – Ground : Continuity should not exist.
31 (V/R) – Ground : Continuity should not exist.
32 (BR) – Ground : Continuity should not exist.

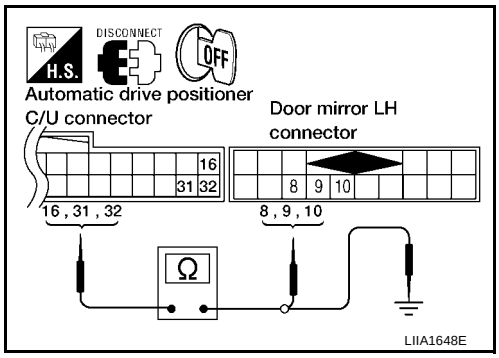

OK or NG

OK >> GO TO 4.
NG >> Repair or replace harness.

4. CHECK AUTOMATIC DRIVE POSITIONER CONTROL UNIT OUTPUT SIGNAL

1. Connect the automatic drive positioner control unit and door mirror LH.
2. Turn ignition switch to ACC.
3. Check voltage between door mirror LH connector and ground.

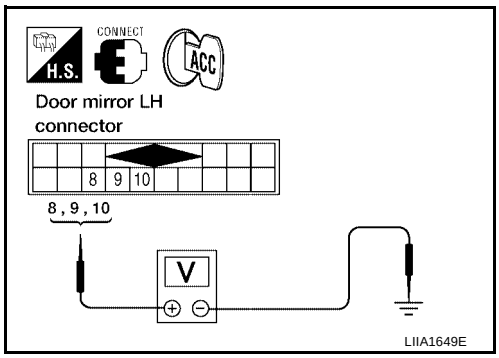

Connector	Terminals (Wire color)		Condition	Voltage (V) (Approx.)
	(+)	(–)		
D4	8 (G/B)	Ground	When motor is DOWN or RIGHT operation	1.5 - Battery voltage
			Other than above	0
	9 (BR)		When motor is LEFT operation	1.5 - Battery voltage
			Other than above	0
	10 (V/R)		When motor is UP operation	1.5 Battery voltage
			Other than above	0

OK or NG

OK >> Replace door mirror LH.
NG >> Replace automatic drive positioner control unit.

MIRROR MOTOR RH CIRCUIT INSPECTION

1. CHECK MIRROR MOTOR RH MECHANISM

Check the following.

- Operation malfunction caused by lifter mechanism deformation or pinched harness or other foreign materials
- Operation malfunction caused by foreign materials adhered to the mirror motor or lead screws
- Operation malfunction and interference with other parts by poor installation

OK or NG

OK >> GO TO 2.
NG >> Repair the malfunctioning part and check again.

2. CHECK FUNCTION

With CONSULT-II

Check operation with "MIRROR MOTOR RH" in ACTIVE TEST.

Test item	Description
MIRROR MOTOR RH	The mirror motor LH is activated by receiving the drive signal.

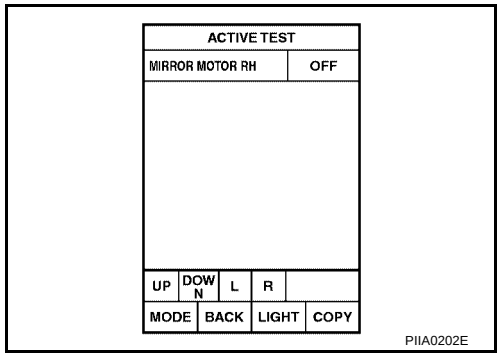

Without CONSULT-II

GO TO 3.

OK or NG

OK >> Mirror motor RH circuit is OK.
NG >> GO TO 3.

3. CHECK MIRROR MOTOR RH HARNESS CONTINUITY

1. Turn ignition switch OFF.
2. Disconnect automatic drive positioner control unit and door mirror RH.
3. Check continuity between automatic drive positioner control unit connector M41 terminals 14, 15, 30 and door mirror RH connector D107 terminals 8, 9, 10.

14 (GR/R) – 10 (GR/R) : Continuity should exist.
15 (L/Y) – 9 (L/Y) : Continuity should exist.
30 (L/R) – 8 (L/R) : Continuity should exist.

4. Check continuity between automatic drive positioner control unit connector M41 terminals 14, 15, 30 and ground.

14 (GR/R) – Ground : Continuity should not exist.
15 (L/Y) – Ground : Continuity should not exist.
30 (L/R) – Ground : Continuity should not exist.

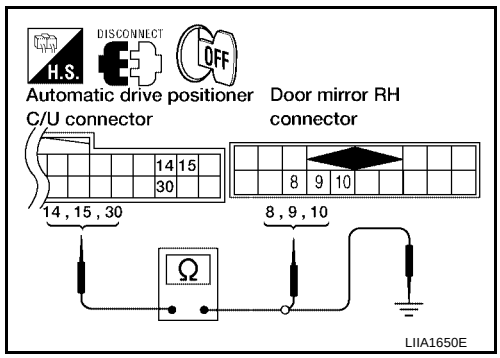

OK or NG

OK >> GO TO 4.
NG >> Repair or replace harness.

4. CHECK AUTOMATIC DRIVE POSITIONER CONTROL UNIT OUTPUT SIGNAL

1. Connect the automatic drive positioner control unit and door mirror RH.
2. Turn ignition switch to ACC.
3. Check voltage between door mirror RH connector and ground.

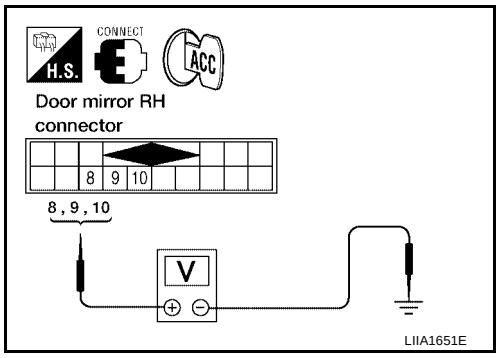

Connector	Terminals (Wire color)		Condition	Voltage (V) (Approx.)
	(+)	(–)		
D107	8 (L/R)	Ground	When motor is DOWN or RIGHT operation	Battery voltage
			Other than above	0
	9 (L/Y)		When motor is LEFT operation	Battery voltage
			Other than above	0
	10 (GR/R)		When motor is UP operation	Battery voltage
			Other than above	0

OK or NG

OK >> Replace door mirror RH.
NG >> Replace automatic drive positioner control unit.

TELESCOPIC CIRCUIT INSPECTION

1. CHECK TELESCOPIC MOTOR

Check the following.

- Operation malfunction caused by telescopic motor deformation or pinched harness or other foreign materials
- Operation malfunction and interference with other parts by poor installation

OK or NG

OK >> GO TO 2.
NG >> Repair the malfunctioning part and check again.

2. CHECK FUNCTION

With CONSULT-II

Check operation with “TELESCO MOTOR” in ACTIVE TEST.

Test item	Description
TELESCO MOTOR	The telescopic motor is activated by receiving the drive signal.

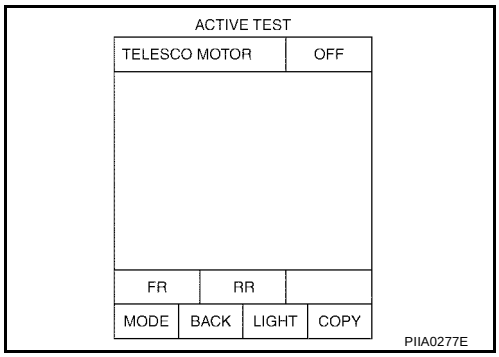

Without CONSULT-II

GO TO 3.

OK or NG

OK >> Telescopic motor circuit is OK.
NG >> GO TO 3.

3. CHECK TELESCOPIC MOTOR HARNESS CONTINUITY

1. Turn ignition switch OFF.
2. Disconnect automatic drive positioner control unit and telescopic motor.
3. Check continuity between automatic drive positioner control unit connector M42 terminals 36, 44 and telescopic motor connector M66 terminals 4, 5.

36 (R) – 4 (R) : Continuity should exist.
44 (G) – 5 (G) : Continuity should exist.

4. Check continuity between automatic drive positioner control unit connector M42 terminals 36, 44 and ground.

36 (R) – Ground : Continuity should not exist.
44 (G) – Ground : Continuity should not exist.

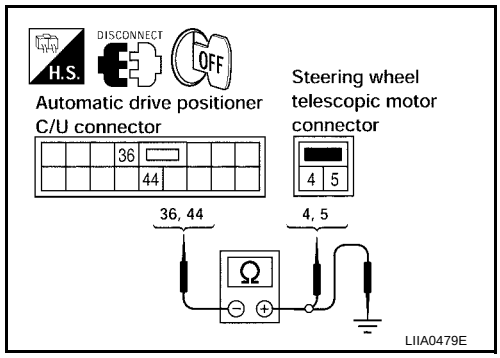

OK or NG

OK >> GO TO 4.
NG >> Repair or replace harness.

4. CHECK AUTOMATIC DRIVE POSITIONER CONTROL UNIT OUTPUT SIGNAL

1. Connect the automatic drive positioner control unit and telescopic motor.
2. Check voltage between automatic drive positioner control unit connector and ground.

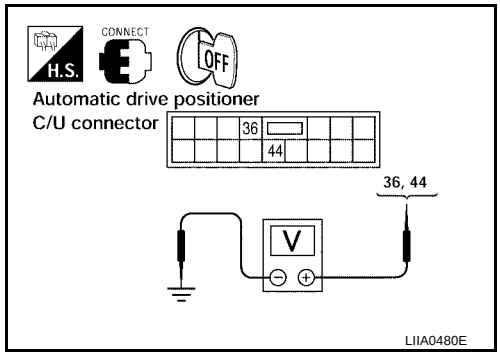

Connector	Terminals (Wire color)		Condition	Voltage (V) (Approx.)
	(+)	(–)		
M42	36 (R)	Ground	Telescopic switch ON (FORWARD operation)	Battery voltage
			Other than above	0
	44 (G)		Telescopic switch ON (BACKWARD operation)	Battery voltage
			Other than above	0

OK or NG

OK >> Replace telescopic motor.
NG >> Replace automatic drive positioner control unit.

TILT CIRCUIT INSPECTION

1. CHECK TILT MOTOR

Check the following.

- Operation malfunction caused by tilt motor deformation or pinched harness or other foreign materials
- Operation malfunction and interference with other parts by poor installation

OK or NG

OK >> GO TO 2.
NG >> Repair the malfunctioning part and check again.

2. CHECK FUNCTION

With CONSULT-II

Check operation with “TILT MOTOR” in ACTIVE TEST.

Test item	Description
TILT MOTOR	The tilt motor is activated by receiving the drive signal.

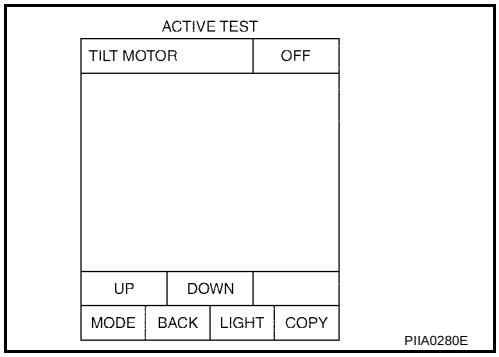

Without CONSULT-II

GO TO 3.

OK or NG

OK >> Steering wheel tilt motor circuit is OK.
NG >> GO TO 3.

3. CHECK TILT MOTOR HARNESS CONTINUITY

1. Turn ignition switch OFF.
2. Disconnect automatic drive positioner control unit and tilt motor.
3. Check continuity between automatic drive positioner control unit connector M42 terminals 35, 42 and tilt motor connector M68 terminals 4, 5.

   35 (G/Y) – 5 (G/Y) : Continuity should exist.
   42 (G/W) – 4 (G/W) : Continuity should exist.

4. Check continuity between automatic drive positioner control unit connector M42 terminals 35, 42 and ground.

   35 (G/Y) – Ground : Continuity should not exist.
   42 (G/W) – Ground : Continuity should not exist.

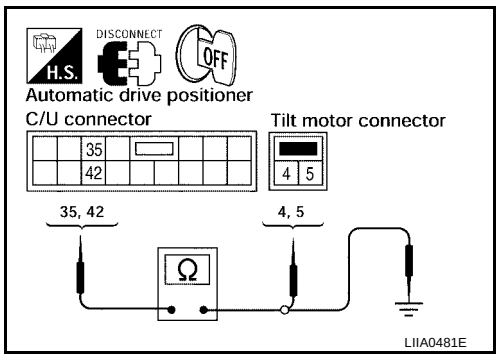

OK or NG

OK >> GO TO 4.
NG >> Repair or replace harness.

4. CHECK AUTOMATIC DRIVE POSITIONER CONTROL UNIT OUTPUT SIGNAL

1. Connect the automatic drive positioner control unit and tilt motor.
2. Check voltage between automatic drive positioner control unit connector and ground.

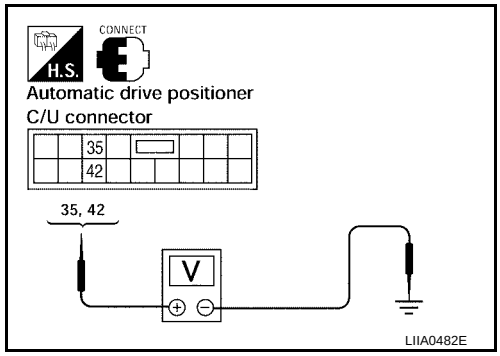

Connector	Terminals (Wire color) (+)	Terminals (Wire color) (–)	Condition	Voltage (V) (Approx.)
M42	35 (G/Y)	Ground	Tilt switch ON (UP operation)	Battery voltage
			Other than above	0
	42 (G/W)		Tilt switch ON (DOWN operation)	Battery voltage
			Other than above	0

OK or NG

OK >> Replace tilt motor.
NG >> Replace automatic drive positioner control unit.

SLIDING SENSOR CIRCUIT INSPECTION

1. CHECK FUNCTION

With CONSULT-II

Check operation with “SLIDE PULSE” on the DATA MONITOR to make sure the pulse changes.

Monitor item [OPERATION or UNIT]		Contents
SLIDE PULSE	—	The seat sliding position (pulse) judged from the sliding sensor signal is displayed

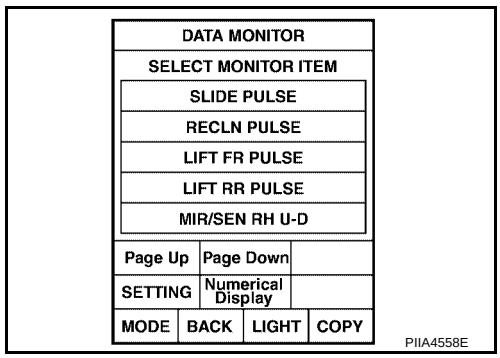

Without CONSULT-II

1. Turn ignition switch OFF.
2. Check signal between driver seat control unit connector and ground, with oscilloscope.

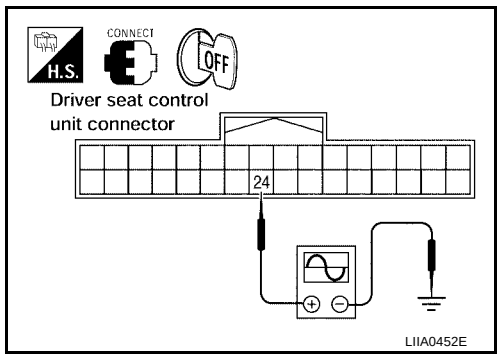

Connector	Terminals (Wire color) (+)	Terminals (Wire color) (–)	Condition	Signal
P2	24 (B)	Ground	Sliding motor operation	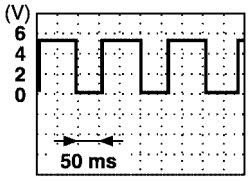 PIIA3277E

OK or NG

OK >> Sliding sensor circuit is OK.
NG >> GO TO 2.

2. CHECK SLIDING SENSOR HARNESS CONTINUITY

1. Disconnect driver seat control unit and sliding motor.
2. Check continuity between driver seat control unit connector P2 terminal 24 and sliding motor P4 terminal 3.

   24 (B) – 3 (B) : Continuity should exist.

3. Check continuity between driver seat control unit P2 terminal 24 and ground.

   24 (B) – Ground : Continuity should not exist.

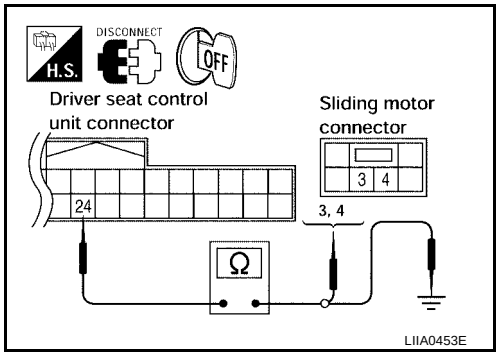

OK or NG

OK >> Replace sliding motor.
NG >> Repair or replace harness.

RECLINING SENSOR CIRCUIT INSPECTION

1. CHECK FUNCTION

With CONSULT-II

Check operation with “RECLN PULSE” on the DATA MONITOR to make sure the pulse changes.

Monitor item [OPERATION or UNIT]		Contents
RECLN PULSE	—	The seat reclining position (pulse) judged from the reclining sensor is displayed

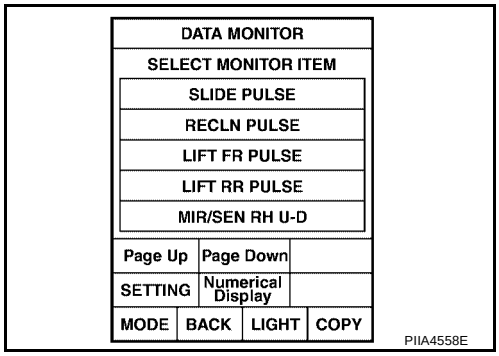

Without CONSULT-II

1. Turn ignition switch OFF.
2. Check signal between driver seat control unit connector and ground, with oscilloscope.

Connector	Terminals (Wire color) (+)	Terminals (Wire color) (–)	Condition	Signal
P2	9 (R)	Ground	Reclining motor operation	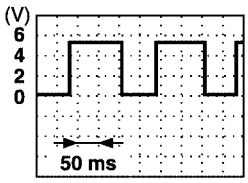 PIIA3278E

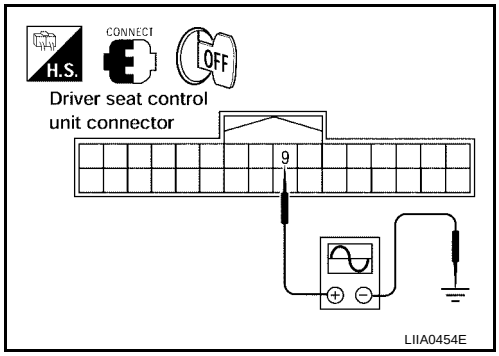

OK or NG

OK >> Reclining sensor circuit is OK.
NG >> GO TO 2.

2. CHECK RECLINING SENSOR HARNESS CONTINUITY

1. Disconnect driver seat control unit and reclining motor.
2. Check continuity between driver seat control unit connector P2 terminal 9 and reclining motor connector P5 terminal 7.

   9 (R) – 7 (R) : Continuity should exist.

3. Check continuity between driver seat control unit connector P2 terminals 9 and ground.

   9 (R) – Ground : Continuity should not exist.

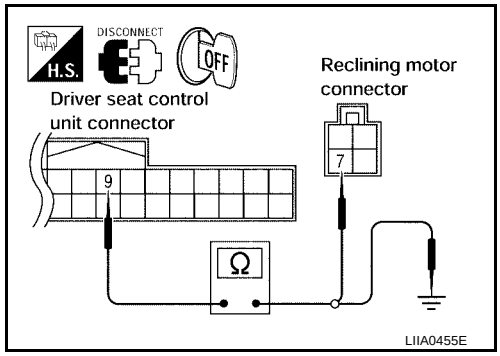

OK or NG

OK >> Replace reclining motor.
NG >> Repair or replace harness.

FRONT LIFTING SENSOR CIRCUIT INSPECTION

1. CHECK FUNCTION

With CONSULT-II

Check operation with “LIFT FR PULSE” on the DATA MONITOR to make sure the pulse changes.

Monitor item [OPERATION or UNIT]		Contents
LIFT FR PULSE	—	The front lifting position (pulse) judged from the front lifting sensor is displayed

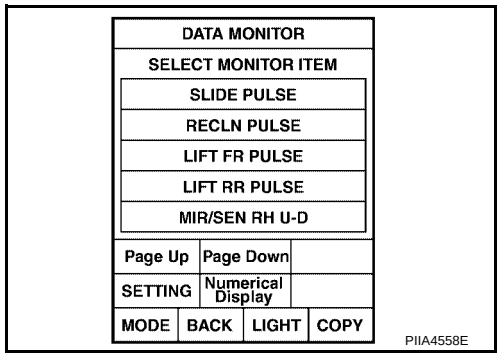

Without CONSULT-II

1. Turn ignition switch OFF.
2. Check signal between driver seat control unit connector and ground, with oscilloscope.

Connector	Terminals (Wire color) (+)	Terminals (Wire color) (–)	Condition	Signal
P2	25 (L/Y)	Ground	Front lifter motor operation	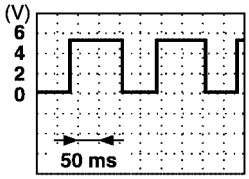

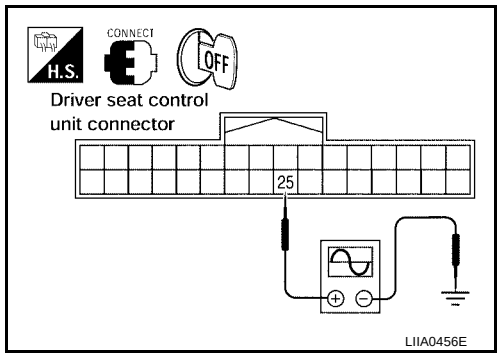

OK or NG

OK >> Front lifting sensor is OK.
NG >> GO TO 2.

2. CHECK FRONT LIFTING SENSOR HARNESS CONTINUITY

1. Disconnect driver seat control unit and front lifter motor.
2. Check continuity between driver seat control unit connector P2 terminal 25 and front lifter motor connector P6 terminal 10.

   25 (L/Y) – 10 (L/Y) : Continuity should exist.

3. Check continuity between driver seat control unit connector P2 terminals 25 and ground.

   25 (L/Y) – Ground : Continuity should not exist.

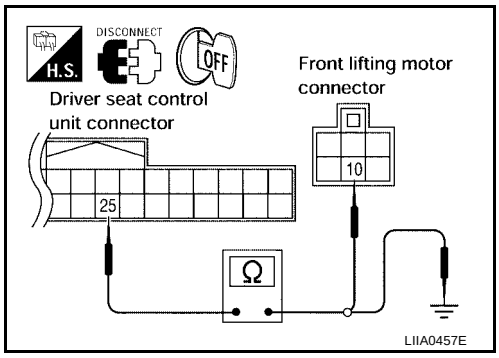

OK or NG

OK >> Replace front lifting motor.
NG >> Repair or replace harness.

REAR LIFTING SENSOR CIRCUIT INSPECTION

1. CHECK REAR LIFTING SENSOR INPUT/OUTPUT SIGNAL

With CONSULT-II

Check operation with “LIFT RR PULSE” on the DATA MONITOR to make sure pulse changes.

Monitor item [OPERATION or UNIT		
LIFT RR PULSE	—	The rear lifting position (pulse) judged from the rear lifting sensor is displayed.

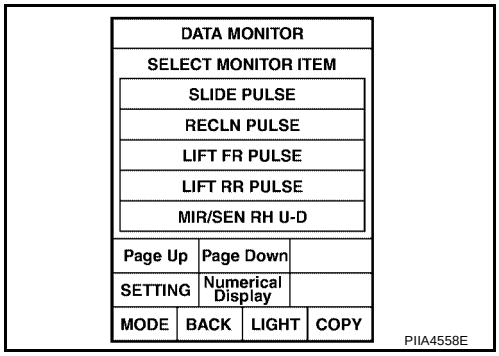

Without CONSULT-II

1. Turn ignition switch OFF.
2. Check signal between driver seat control unit connector and ground, with oscilloscope.

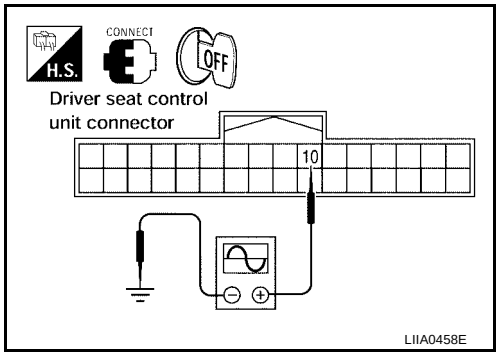

Connector	Terminals (Wire color)		Condition	Signal
	(+)	(–)		
P2	10 (BR)	Ground	Rear lifting motor operation	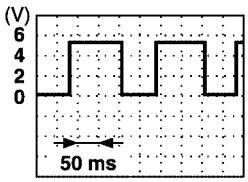

OK or NG

OK >> Rear lifting sensor circuit is OK.
NG >> GO TO 2.

2. CHECK REAR LIFTING SENSOR HARNESS CONTINUITY

1. Disconnect driver seat control unit connector and rear lifter motor connector.
2. Check continuity between driver seat control unit connector P2 terminal 10 and rear lifter motor connector P7 terminal 10.

   10 (BR) – 13 (BR) : Continuity should exist.

3. Check continuity between driver seat control unit connector P2 terminals 10 and ground.

   10 (BR) – Ground : Continuity should not exist.

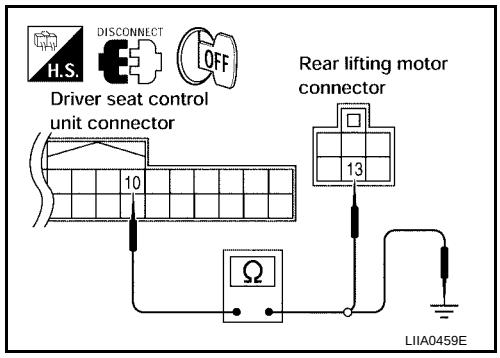

OK or NG

OK >> Replace rear lifter motor.
NG >> Repair or replace harness.

MIRROR SENSOR LH CIRCUIT INSPECTION

1. CHECK MIRROR SENSOR LH INPUT/OUTPUT SIGNAL

With CONSULT-II

Check operation with “MIR/SE LH R-L, MIR/SE LH U-D” on the DATA MONITOR to make sure pulse changes.

Monitor item [OPERATION or UNIT		
MIR/SEN LH R-L	"V"	Voltage output from LH door mirror sensor (LH/RH) is displayed.
MIR/SEN LH U-D	"V"	Voltage output from LH door mirror sensor (UP/DOWN) is displaced.

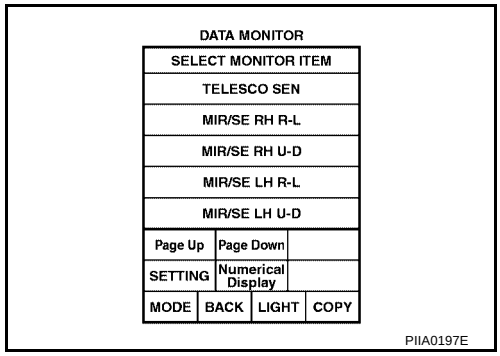

Without CONSULT-II

1. Turn ignition switch to ACC.
2. Check voltage between door mirror LH connector and ground.

Connector	Terminals (Wire color)		Condition	Voltage (V) (Approx.)
	(+)	(–)		
D4	5 (L/Y)	Ground	When motor is UP or DOWN operation	Changes between 3.4 - 0.6
	11 (G/R)		When motor is LEFT or RIGHT operation	Changes between 3.4 - 0.6

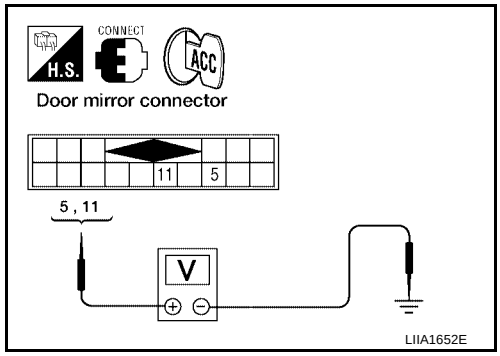

OK or NG

OK >> Mirror sensor LH circuit is OK.
NG >> GO TO 2.

2. CHECK HARNESS CONTINUITY 1

1. Turn ignition switch OFF.
2. Disconnect automatic drive positioner control unit and door mirror LH.
3. Check continuity between automatic drive positioner control unit connector M42 terminals 33, 41 and door mirror LH connector D4 terminals 4, 12.

33 (W/L) – 4 (W/L) : Continuity should exist.
41 (Y/G) – 12 (LG) : Continuity should exist.

4. Check continuity between driver seat control unit connector M42 terminals 33, 41 and ground.

33 (W/L) – Ground : Continuity should not exist.
41 (Y/G) – Ground : Continuity should not exist.

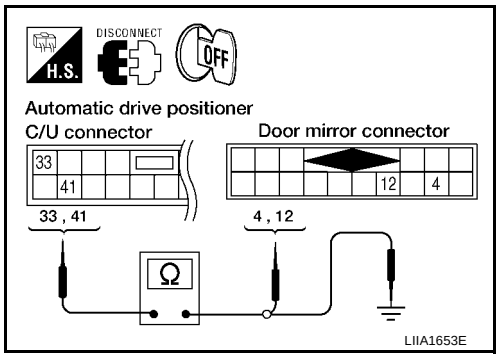

OK or NG

OK >> GO TO 3.
NG >> Repair or replace harness.

3. CHECK HARNESS CONTINUITY 2

1. Check continuity between automatic drive positioner control unit connector M41 terminals 6, 22 and door mirror LH connector D4 terminals 5, 11.

6 (L/Y) – 5 (L/Y) : Continuity should exist.
22 (G/R) – 11 (G/R) : Continuity should exist.

2. Check continuity between driver seat control unit connector M41 terminals 6, 22 and ground.

6 (L/Y) – Ground : Continuity should not exist.
22 (G/R) – Ground : Continuity should not exist.

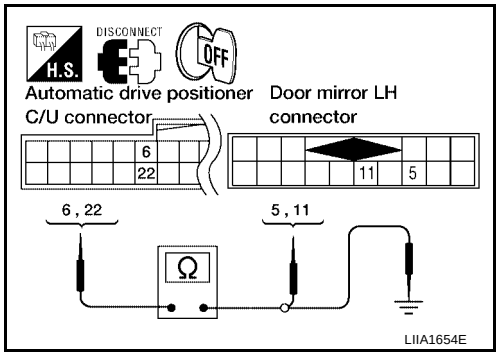

OK or NG

OK >> Replace door mirror LH.
NG >> Repair or replace harness.

MIRROR SENSOR RH CIRCUIT INSPECTION

1. CHECK MIRROR SENSOR RH INPUT/OUTPUT SIGNAL

With CONSULT-II

Check operation with “MIR/SE RH R-L, MIR/SE RH U-D” on the DATA MONITOR to make sure pulse changes.

Monitor item [OPERATION or UNIT		
MIR/SEN RH R-L	"V"	Voltage output from RH door mirror sensor (RH/RH) is displayed.
MIR/SEN RH U-D	"V"	Voltage output from RH door mirror sensor (UP/DOWN) is displaced.

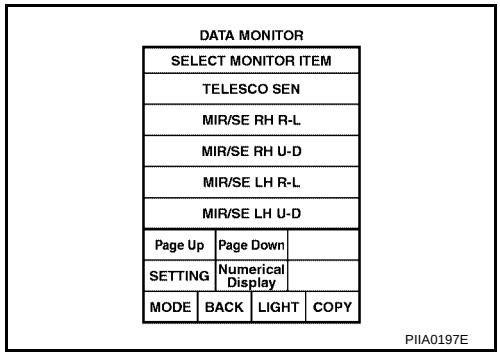

Without CONSULT-II

1. Turn ignition switch to ACC.
2. Check voltage between door mirror RH connector and ground.

Connector	Terminals (Wire color)		Condition	Voltage (V) (Approx.)
	(+)	(–)		
D107	5 (R/B)	Ground	When motor is UP or DOWN operation	Changes between 3.4 - 0.6
	11 (L/W)		When motor is LEFT or RIGHT operation	Changes between 3.4 - 0.6

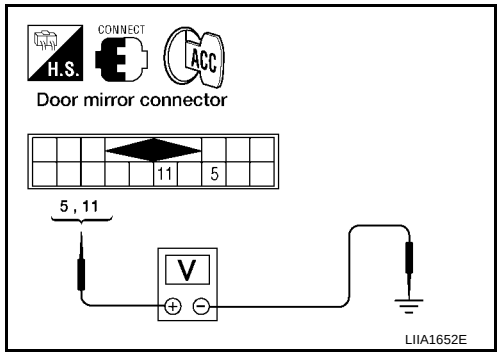

OK or NG

OK >> Mirror sensor RH circuit is OK.
NG >> GO TO 2.

2. CHECK HARNESS CONTINUITY 1

1. Turn ignition switch OFF.
2. Disconnect automatic drive positioner control unit and door mirror RH.
3. Check continuity between automatic drive positioner control unit connector M42 terminals 33, 41 and door mirror RH connector D107 terminals 4, 12.

   33 (W/L) – 4 (W/L) : Continuity should exist.
   41 (Y/G) – 12 (LG) : Continuity should exist.

4. Check continuity between driver seat control unit connector M42 terminals 33, 41 and ground.

   33 (W/L) – Ground : Continuity should not exist.
   41 (Y/G) – Ground : Continuity should not exist.

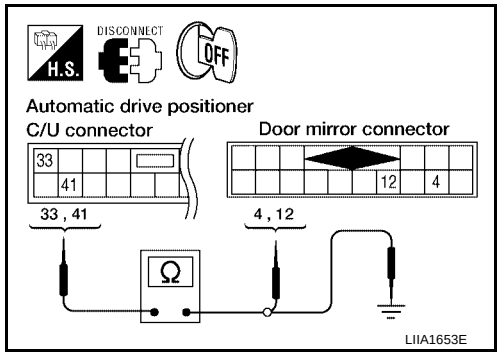

OK or NG

OK >> GO TO 3.
NG >> Repair or replace harness.

3. CHECK HARNESS CONTINUITY 2

1. Check continuity between automatic drive positioner control unit connector M41 terminals 5, 21 and door mirror RH connector D107 terminals 5, 11.

   5 (R/B) – 5 (R/B) : Continuity should exist.
   21 (L/W) – 11 (L/W) : Continuity should exist.

2. Check continuity between driver seat control unit connector M41 terminals 5, 21 and ground.

   5 (R/B) – Ground : Continuity should not exist.
   21 (L/W) – Ground : Continuity should not exist.

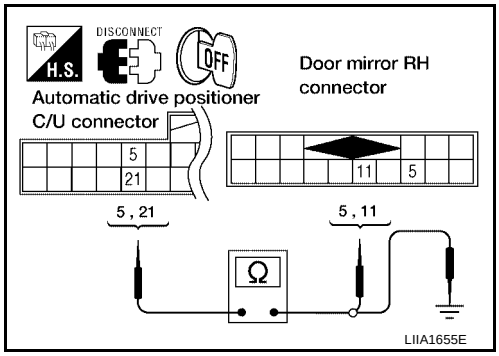

OK or NG

OK >> Replace door mirror RH.
NG >> Repair or replace harness.

A/T DEVICE (DETENT SWITCH) CIRCUIT INSPECTION (A/T MODEL ONLY)

1. CHECK FUNCTION

With CONSULT-II

Check that when the A/T selector lever is in P position, "DETENT SW" on the DATA MONITOR becomes OFF.

Monitor item [OPERATION or UNIT]		Contents
DETENT SW	"ON/ OFF"	The selector lever position "P position (OFF)/other than P position (ON)" judged from the detent switch signal is displayed.

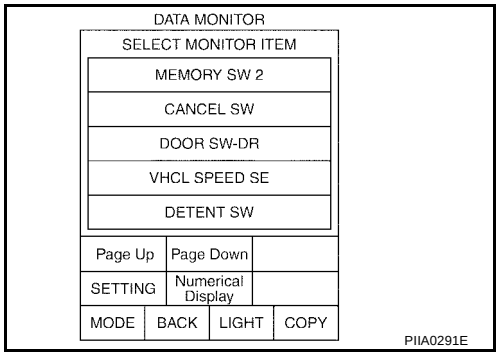

Without CONSULT-II

GO TO 2.

OK or NG

OK >> A/T device (detent switch) circuit is OK.
NG >> GO TO 2.

2. CHECK A/T DEVICE (DETENT SWITCH) HARNESS

1. Turn ignition switch OFF.
2. Disconnect A/T device (detent switch) and key switch and key lock solenoid.
3. Check continuity between A/T device (detent switch) connector M34 terminal 5 and key switch and key lock solenoid connector M27 terminal 4.

   5 (B/R) – 4 (B/R) : Continuity should exist.

4. Check continuity between A/T device (detent switch) connector M34 terminal 5 and ground.

   5 (B/R) – Ground : Continuity should not exist.

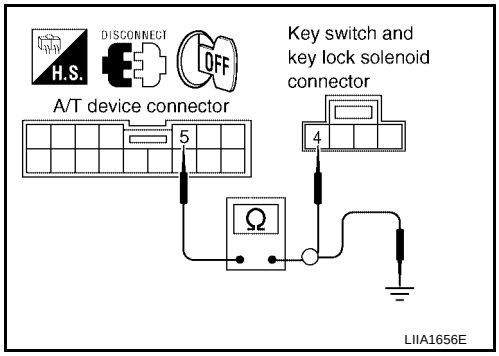

OK or NG

OK >> GO TO 3.
NG >> Repair or replace harness.

3. CHECK DETENT SWITCH

Check continuity between A/T device terminals as follows.

Terminals		Condition	Continuity
(+)	(–)		
5	6	P position	No
		Other than P position	Yes

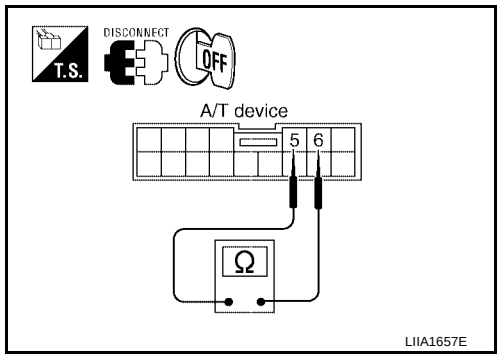

OK or NG

OK >> GO TO 4.
NG >> Replace A/T device (detent switch).

4. CHECK A/T DEVICE (DETENT SWITCH) SIGNAL HARNESS

1. Disconnect driver seat control unit.
2. Check continuity between driver seat control unit connector P2 terminal 21 and A/T device (detent switch) connector M34 terminal 6.

   21 (SB) – 6 (BR/Y) : Continuity should exist.

3. Check continuity between driver seat control unit connector P2 terminal 21 and ground.

   21 (SB) – Ground : Continuity should not exist.

OK or NG

OK >> Replace driver seat control unit.
NG >> Repair or replace harness.

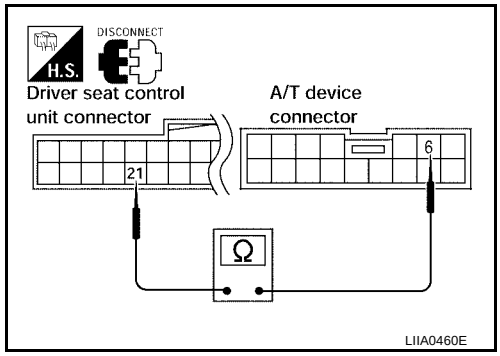

PARKING BRAKE SWITCH CIRCUIT (M/T MODEL ONLY)

1. CHECK FUNCTION

With CONSULT-II

Check that when the parking brake is released, “PARKING BRAKE” on the DATA MONITOR becomes OFF.

Monitor item [OPERATION or UNIT]		Contents
PARKING BRAKE	“ON/ OFF”	The parking brake is "released (OFF)/parking brake is engaged (ON)” judged from the parking brake switch signal is displayed.

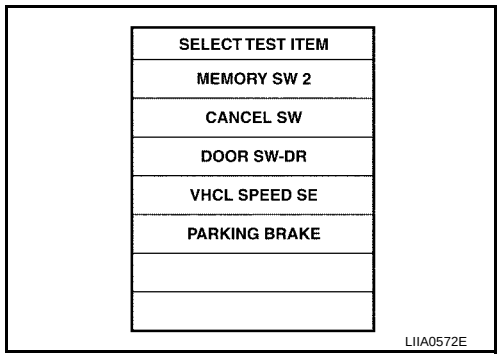

Without CONSULT-II

GO TO 2.

OK or NG

OK >> Parking brake switch circuit is OK.
NG >> GO TO 2.

2. CHECK PARKING BRAKE SWITCH HARNESS

1. Turn ignition switch OFF.
2. Disconnect parking brake switch and drive seat control unit.
3. Check continuity between parking brake switch connector M36 terminal + and driver seat control unit connector P2 terminal 8.

+ (P/B) – 8 (BR/Y) : Continuity should exist.

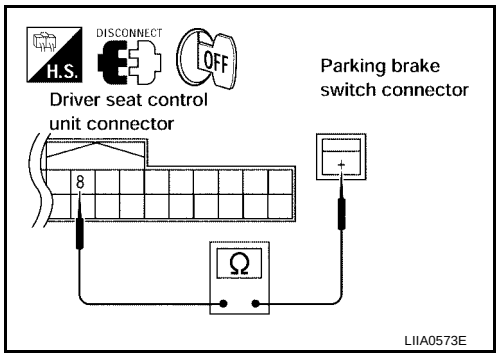

OK or NG

OK >> GO TO 3.
NG >> Repair or replace harness.

3. CHECK PARKING BRAKE SWITCH

Check continuity between parking brake switch terminals as follows.

Terminals		Condition	Continuity
(+)	(–)		
+	Ground	Parking brake released	No
		Parking brake engaged	Yes

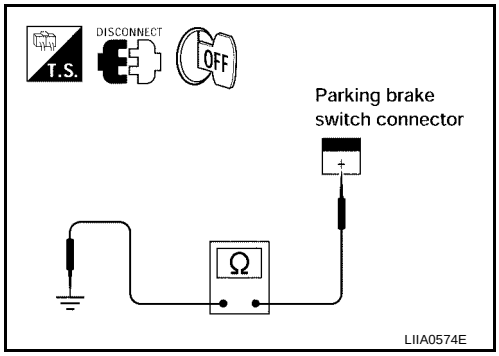

OK or NG

OK >> Check the condition of the harness and connector.
NG >> Replace parking brake switch.

TELESCOPIC SENSOR CIRCUIT INSPECTION

1. CHECK FUNCTION

With CONSULT-II

Operate the ADP steering switch with “TELESCO SEN” on the DATA MONITOR to make sure the voltage changes.

Monitor item [OPERATION or UNIT]		Contents
TELESCO SEN	“V”	The telescopic position (voltage) judged from the telescopic sensor signal is displayed.

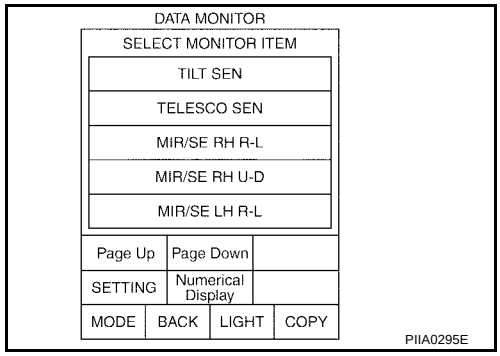

Without CONSULT-II

1. Turn ignition switch OFF.
2. Check voltage between automatic drive positioner connector and ground.

Connector	Terminals (Wire color)		Condition	Voltage (V) (Approx.)
	(+)	(–)		
M41	23 (R/Y)	Ground	Telescopic front end position	2
			Telescopic back end position	4

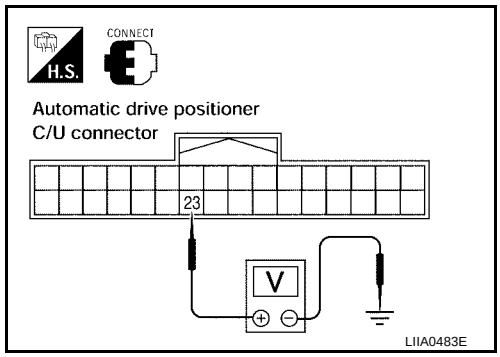

OK or NG

OK >> Telescopic sensor circuit is OK.
NG >> GO TO 2.

2. CHECK HARNESS CONTINUITY

1. Disconnect automatic drive positioner control unit and steeing wheel telescopic sensor.
2. Check continuity between automatic drive positioner connector M41, M42 terminals 23, 33, 41 and telescopic sensor connector M67 terminals 1, 2, 3.

23 (R/Y) – 2 (R/Y) : Continuity should exist.
33 (W/L) – 1 (W/L) : Continuity should exist.
41 (Y/G) – 3 (Y/G) : Continuity should exist.

3. Check continuity between automatic drive positioner control unit connectors M41, M42 terminals 23, 33, 41 and ground.

23 (R/Y) – Ground : Continuity should not exist.
33 (W/L) – Ground : Continuity should not exist.
41 (Y/G) – Ground : Continuity should not exist.

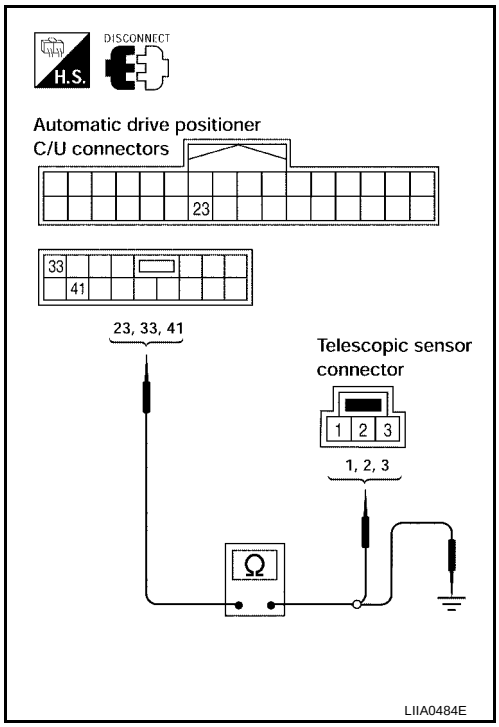

OK or NG

OK >> Replace telescopic motor.
NG >> Repair or replace harness.

TILT SENSOR CIRCUIT INSPECTION

1. CHECK FUNCTION

With CONSULT-II

Operate the ADP steering switch with “TILT SEN” on the DATA MONITOR to make sure the voltage changes.

Monitor item [OPERATION or UNIT]		Contents
TILT SEN	“V”	The tilt position (voltage) judged from the tilt sensor signal is displayed.

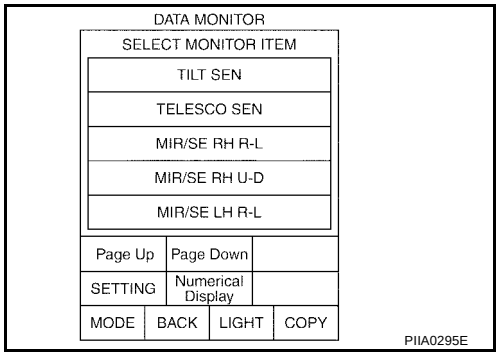

Without CONSULT-II

1. Turn ignition switch OFF.
2. Check voltage between automatic drive positioner connector and ground.

Connector	Terminals (Wire color)		Condition	Voltage (V) (Approx.)
	(+)	(–)		
M41	7 (O/L)	Ground	Tilt top position	2
			Tilt down position	4

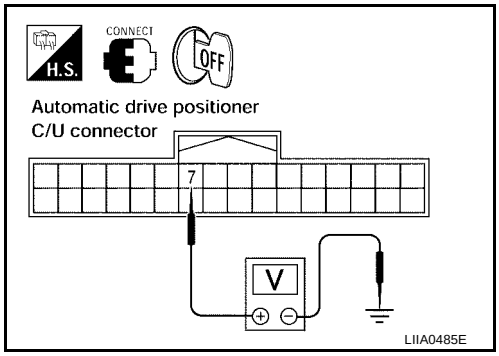

OK or NG

OK >> Tilt sensor circuit is OK.
NG >> GO TO 2.

2. CHECK HARNESS CONTINUITY

1. Disconnect automatic drive positioner control unit and tilt sensor.
2. Check continuity between automatic drive positioner connector M41, M42 terminals 7, 33, 41 and tilt sensor connector M69 terminals 1, 2, 3.

7 (O/L) – 2 (O/L) : Continuity should exist.
33 (W/L) – 3 (W/L) : Continuity should exist.
41 (Y/G) – 1 (Y/G) : Continuity should exist.

3. Check continuity between automatic drive positioner control unit connectors M41, M42 terminals 7, 33, 41 and ground.

7 (O/L) – Ground : Continuity should not exist.
33 (W/L) – Ground : Continuity should not exist.
41 (Y/G) – Ground : Continuity should not exist.

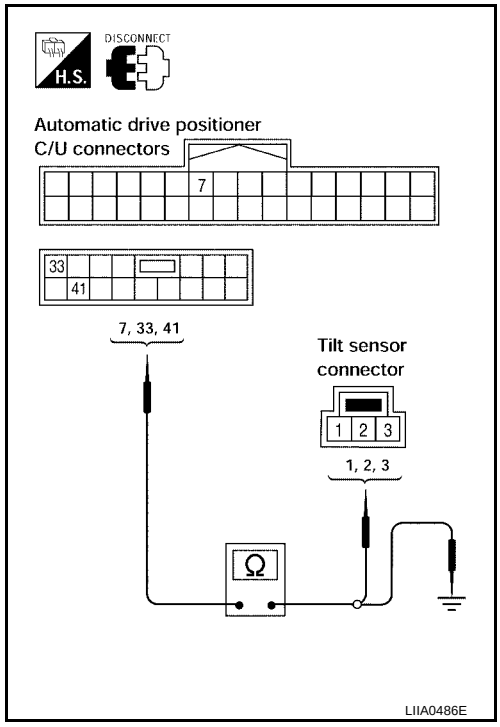

OK or NG

OK >> Replace tilt motor.
NG >> Repair or replace harness.

KEY SWITCH AND KEY LOCK SOLENOID CIRCUIT INSPECTION

1. CHECK KEY SWITCH AND KEY LOCK SOLENOID

With CONSULT-II

With “IGN KEY SW” on the DATA MONITOR, Check ON/OFF operation.

Monitor item [OPERATION or UNIT]		Contents
IGN KEY SW	“ON/OFF”	Key inserted (ON)/key removed (OFF) status judged from the key-in detection switch is displayed.

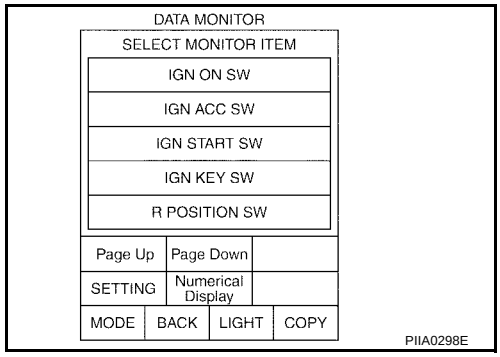

Without CONSULT-II

GO TO 2.

OK or NG

OK >> Key switch and key lock solenoid circuit is OK.
NG >> GO TO 2.

2. KEY SWITCH AND KEY LOCK SOLENOID POWER SUPPLY CIRCUIT INSPECTION

1. Turn ignition switch OFF.
2. Disconnect key switch and key lock solenoid.
3. Check voltage between key switch and key lock solenoid connector M27 terminal 3 and ground.

3 (Y/B) – Ground : Battery voltage.

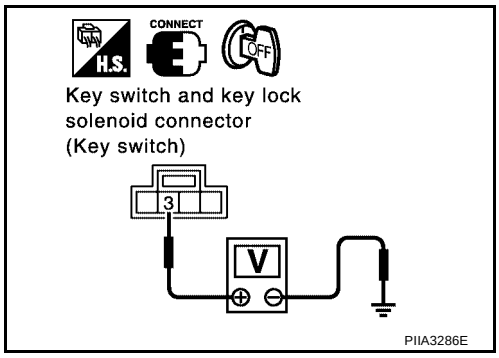

OK or NG

OK >> GO TO 3.
NG >> Check harness between key switch and key lock solenoid and fuse.

3. CHECK KEY SWITCH AND KEY LOCK SOLENOID

Check continuity between key switch and key lock solenoid terminals as follows.

Terminals		Condition	Continuity
(+)	(–)		
3	4	Key is inserted in ignition key cylinder.	Yes
		Key is removed from ignition key cylinder.	No

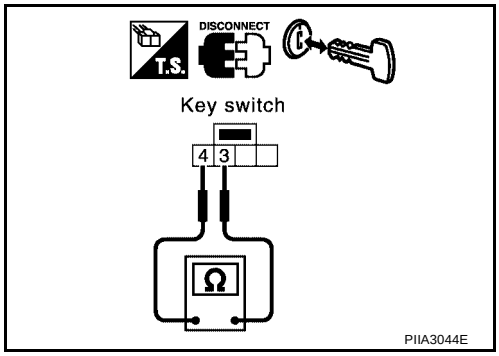

OK or NG

OK >> GO TO 4.
NG >> Replace key switch and key lock solenoid.

4. CHECK HARNESS CONTINUITY

1. Disconnect key switch and key lock solenoid and BCM.
2. Check continuity between key switch and key lock solenoid connector M27 terminal 4 and BCM connector M18 terminal 37.

4 (B/R) – 37 (B/R) : Continuity should exist.

3. Check continuity between key switch and key lock solenoid connector M27 terminal 4 and ground.

4 (B/R) – Ground : Continuity should not exist.

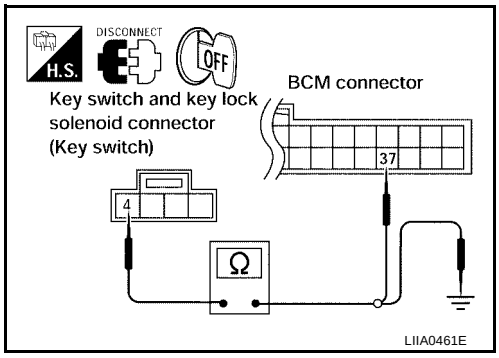

OK or NG

OK >> Key switch and key lock solenoid circuit is OK.
NG >> Repair or replace harness.

FRONT DOOR SWITCH LH CIRCUIT INSPECTION

1. CHECK DOOR SWITCH INPUT SIGNAL

With CONSULT-II

Check door switch (“DOOR SW-DR”) in “DATA MONITOR” mode with CONSULT-II.

Monitor item	Condition	
DOOR SW-DR	OPEN	: ON
	CLOSE	: OFF

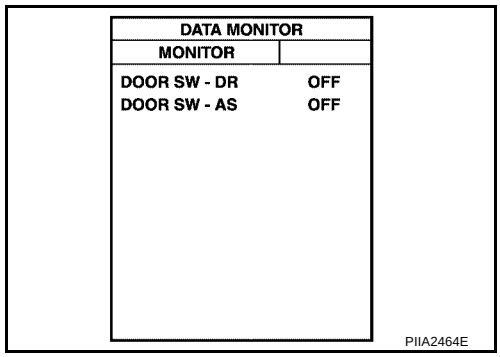

Without CONSULT-II

Check voltage between BCM connector and ground.

Item	Connector	Terminals (Wire color)		Condition	Voltage (V) (Approx.)
		(+)	(-)		
Front LH	M20	62 (SB)	Ground	OPEN	0
				CLOSE	Battery voltage

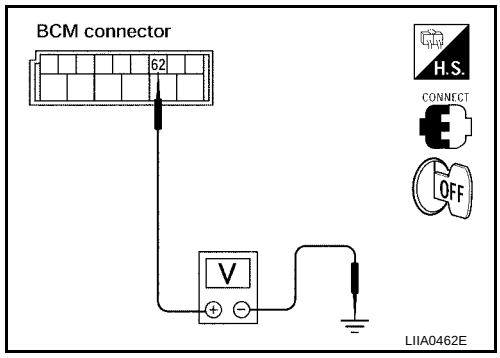

OK or NG

OK >> Front door switch LH is OK.
NG >> GO TO 2.

2. CHECK FRONT DOOR SWITCH LH CIRCUIT

1. Turn ignition switch OFF.
2. Disconnect front door switch LH and BCM.
3. Check continuity between front door switch LH connector B8 terminal 2 and BCM connector M18 terminal 62.

   2 (SB) – 62 (SB) :Continuity should exist.

4. Check continuity between door switch LH connector B8 terminal 2 and ground.

   2 (SB) – Ground :Continuity should not exist.

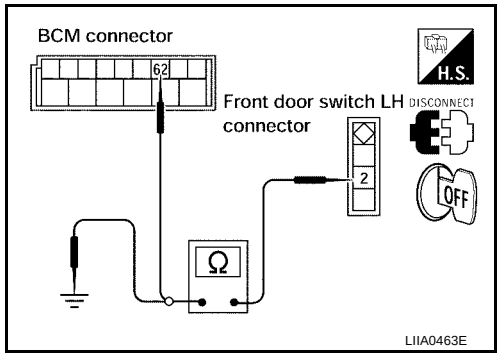

OK or NG

OK >> GO TO 3.
NG >> Repair or replace harness.

3. CHECK FRONT DOOR SWITCH LH

Check continuity between front door switch LH terminal 2 and body ground part of door switch.

Terminal		Door switch	Continuity
2	Body ground part of door switch	Pushed	No
		Released	Yes

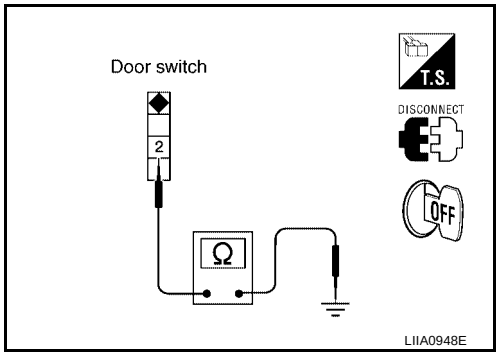

OK or NG

OK >> Further inspection is necessary. Refer to symptom chart.

NG >> Replace front door switch LH.

SEAT MEMORY SWITCH CIRCUIT INSPECTION

1. CHECK FUNCTION

With CONSULT-II

With “SET SW,MEMORY SW1, MEMORY SW2”, “SET SW” on the DATA MONITOR, operate the switch to check ON/OFF operation.

Monitor item [OPERATION or UNIT]		Contents
MEMORY SW1	“ON/OFF”	ON/OFF status judged from the seat memory switch 1 signal is displayed.
MEMORY SW2	“ON/OFF”	ON/OFF status judged from the seat memory switch 2 signal is displayed.
SET SW	“ON/OFF”	ON/OFF status judged from the setting switch signal is displayed.

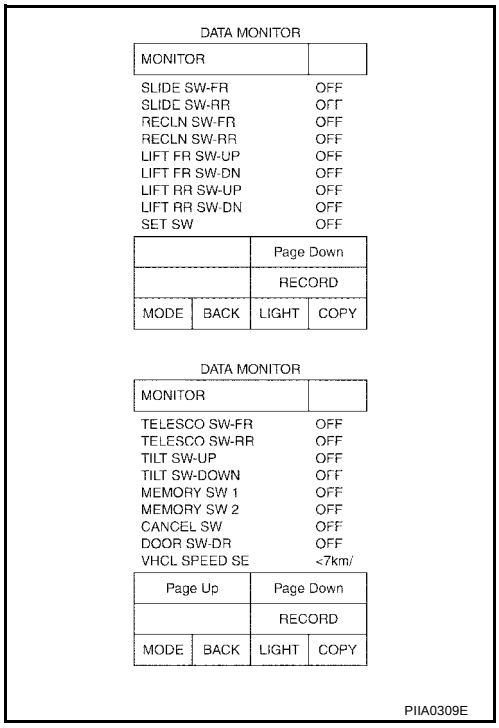

Without CONSULT-II

GO TO 2.

OK or NG

OK >> Seat memory switch circuit is OK.

NG >> GO TO 2.

2. CHECK SEAT MEMORY SWITCH

1. Turn ignition switch OFF.
2. Disconnect seat memory switch.
3. Operate the setting switch and memory switch.
4. Check continuity between seat memory switch terminals as follows.

Terminal (+)	Terminal (–)	Condition	Continuity
3	4	Set switch: ON	Yes
		Set switch: OFF	No
2		Memory switch 1 ON	Yes
		Memory switch 1: OFF	No
1		Memory switch 2: ON	Yes
		Memory switch 2: OFF	No

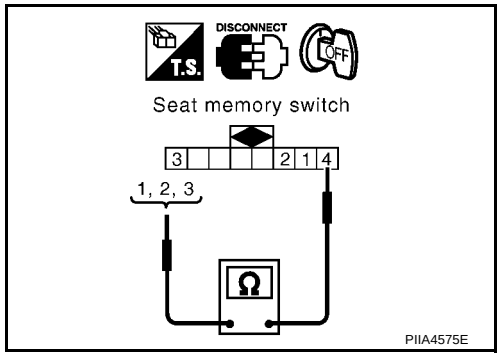

OK or NG

OK >> GO TO 3.
NG >> Replace seat memory switch.

3. CHECK HARNESS CONTINUITY

1. Disconnect automatic drive positioner control unit.
2. Check continuity between automatic drive positioner control unit connector M41 terminals 9, 24, 25 and seat memory switch connector D5 terminals 1, 2, 3.

   9 (L/W) – 1 (L) : Continuity should exist.
   24 (R/B) – 3 (R/B) : Continuity should exist.
   25 (V) – 2 (V) : Continuity should exist.

3. Check continuity between automatic drive positioner control unit connector M41 terminals 9, 24, 25 and ground.

   9 (L/W) – Ground : Continuity should not exist.
   24 (R/B) – Ground : Continuity should not exist.
   25 (V) – Ground : Continuity should not exist.

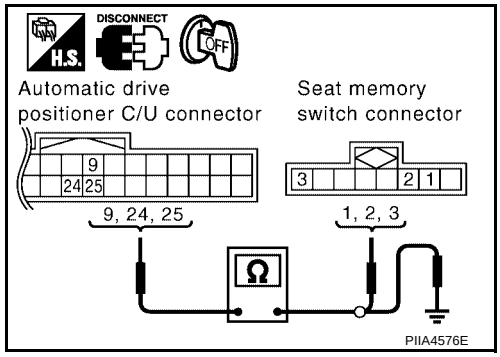

OK or NG

OK >> GO TO 4.
NG >> Repair or replace harness.

4. CHECK SEAT MEMORY SWITCH GROUND CIRCUIT

Check continuity between seat memory switch D5 terminal 4 and ground.

4 (B) – Ground : Continuity should exist.

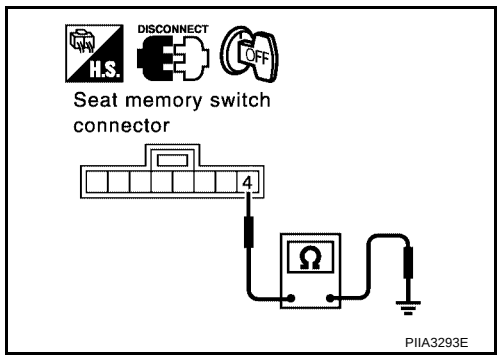

OK or NG

OK >> Replace automatic drive positioner control unit.
NG >> Repair or replace harness.

SLIDING SWITCH CIRCUIT INSPECTION

1. CHECK FUNCTION

With CONSULT-II

With “SLIDE SW-FR, SLIDE SW-RR” on the DATA MONITOR, operate the sliding switch to check ON/OFF operation.

Monitor item [OPERATION or UNIT]		Contents
SLIDE SW–FR	"ON/OFF"	ON / OFF status judged from the sliding switch (FR) signal is displayed.
SLIDE SW–RR	"ON/OFF"	ON / OFF status judged from the sliding switch (RR) signal is displayed.

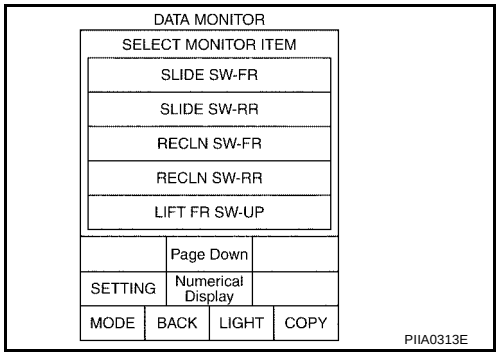

Without CONSULT-II

1. Turn ignition switch OFF.
2. Check voltage between driver seat control unit connector and ground.

Connector	Terminal (Wire color) (+)	Terminal (Wire color) (–)	Condition	Voltage (V) (Approx.)
P2	11 (GR/R)	Ground	Sliding switch ON (BACKWARD operation)	0
			Other than above	Battery voltage
	26 (P/B)		Sliding switch ON (FORWARD operation)	0
			Other than above	Battery voltage

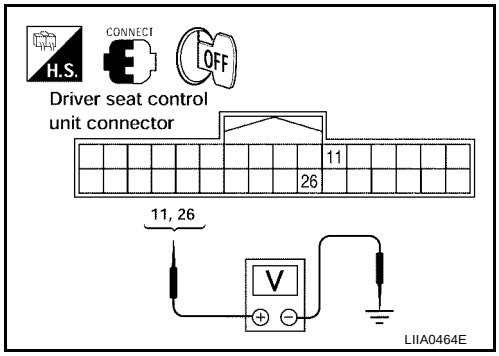

OK or NG

OK >> Sliding switch circuit is OK.
NG >> GO TO 2.

2. CHECK POWER SEAT SWITCH LH HARNESS CONTINUITY

1. Disconnect driver seat control unit and power seat switch LH.
2. Check continuity between driver seat control unit connector P2 terminals 11, 26 and power seat switch connector P8 terminals 1, 2.

   11 (GR/R) – 2 (GR/R) : Continuity should exist.
   26 (P/B) – 1 (P/B) : Continuity should exist.

3. Check continuity between driver seat control unit connector P2 terminals 11, 26 and ground.

   11 (GR/R) – Ground : Continuity should not exist.
   26 (P/B) – Ground : Continuity should not exist.

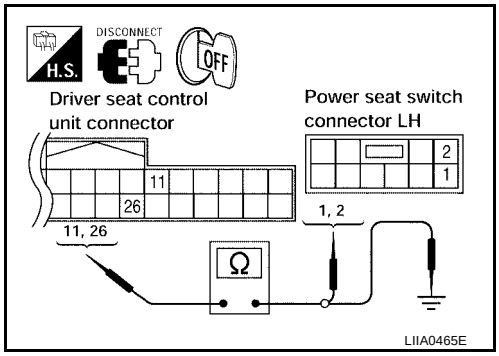

OK or NG

OK >> GO TO 3.
NG >> Repair or replace harness.

3. CHECK SLIDING SWITCH

Check continuity between power seat switch LH terminals as follows.

Terminal (+)	Terminal (–)	Condition	Continuity
1	9	Sliding switch ON (FORWARD operation)	Yes
		Other than above	No
2		Sliding switch ON (BACKWARD operation)	Yes
		Other than above	No

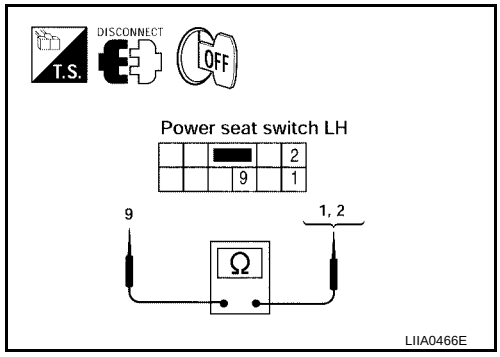

OK or NG

OK >> Check the condition of the harness and connector.
NG >> Replace power seat switch LH.

RECLINING SWITCH INSPECTION

1. CHECK FUNCTION

With CONSULT-II

With "RECLN SW-FR, RECLN SW-RR" on the DATA MONITOR, operate the reclining switch to check ON/OFF operation.

Monitor item [OPERATION or UNIT]		Contents
RECLN SW –FR	"ON/OFF"	ON/OFF status judged from the reclining switch (FR) signal is displayed.
RECLN SW –RR	"ON/OFF"	ON/OFF status judged from the reclining switch (RR) signal is displayed.

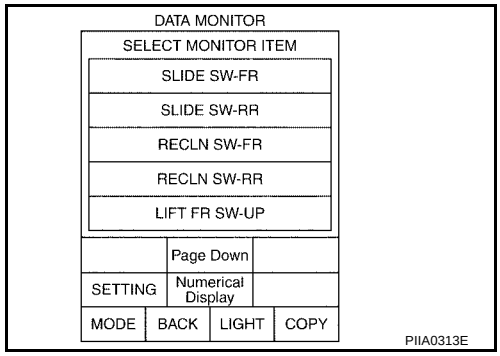

Without CONSULT-II

1. Turn ignition switch OFF.
2. Check voltage between driver seat control unit connector and ground.

Terminals (Wire color) Connector	Terminal (+)	Terminal (–)	Condition	Voltage (V) (Approx.)
P2	12 (P)	Ground	Reclining switch ON (BACKWARD operation)	0
			Other than above	Battery voltage
	27 (W/R)		Reclining switch ON (FORWARD operation)	0
			Other than above	Battery voltage

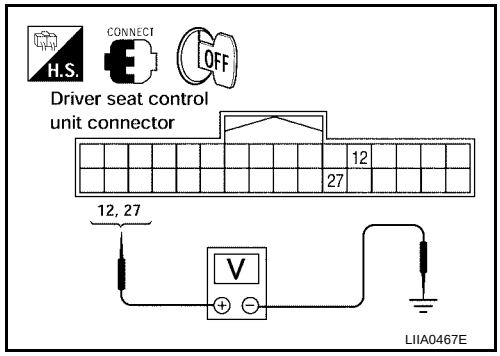

OK or NG

OK >> Reclining switch circuit is OK.
NG >> GO TO 2.

2. CHECK HARNESS CONTINUITY

1. Disconnect driver seat control unit and power seat switch LH.
2. Check continuity between driver seat control unit connector P2 terminals 12, 27 and power seat switch connector P8 terminals 3, 4.

   12 (P) – 4 (P) : Continuity should exist.

   27 (W/R) – 3 (W/R) : Continuity should exist.

3. Check continuity between driver seat control unit connector P2 terminals 12, 27 and ground.

   12 (P) – Ground : Continuity should not exist.

   27 (W/R) – Ground : Continuity should not exist.

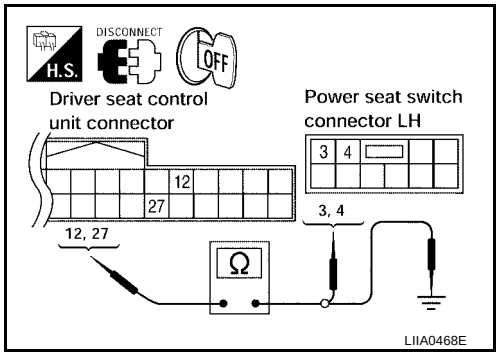

OK or NG

OK >> GO TO 3.
NG >> Repair or replace harness.

3. RECLINING SWITCH INSPECTION

Check continuity between driver seat switch terminals as follows.

Terminal (+)	Terminal (–)	Condition	Continuity
4	9	Reclining switch ON (BACKWARD operation)	Yes
		Other than above	No
3		Reclining switch ON (FORWARD operation)	Yes
		Other than above	No

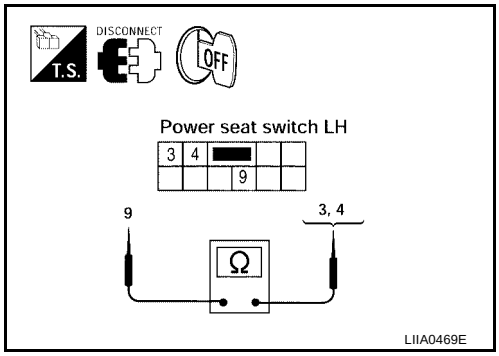

OK or NG

OK >> Check the condition of the harness and connector.
NG >> Replace power seat switch LH.

FRONT LIFTING SWITCH CIRCUIT INSPECTION

1. CHECK FUNCTION

With CONSULT-II

With “LIFT FR SW-UP, LIFT FR SW-DN” on the DATA MONITOR, operate the front lifting switch to check ON/OFF operation.

Monitor item [OPERATION or UNIT]		Contents
LIFT FR SW–DN	"ON/OFF"	ON / OFF status judged from the FR lifter switch (DOWN) signal is displayed.
LIFT RR SW–UP	"ON/OFF"	ON / OFF status judged from the RR lifter switch (UP) signal is displayed.

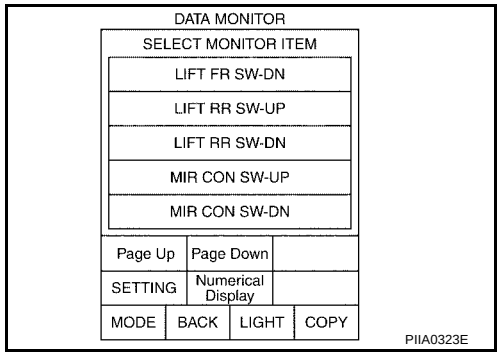

Without CONSULT-II

1. Turn ignition switch OFF.
2. Check voltage between driver seat control unit P2 and ground.

Connector	Terminals (Wire color) (+)	Terminals (Wire color) (–)	Condition	Voltage (V) (Approx.)
P2	13 (W)	Ground	Front lifting switch ON (DOWN operation)	0
			Other than above	Battery voltage
	28 (BR)		Front lifting switch ON (UP operation)	0
			Other than above	Battery voltage

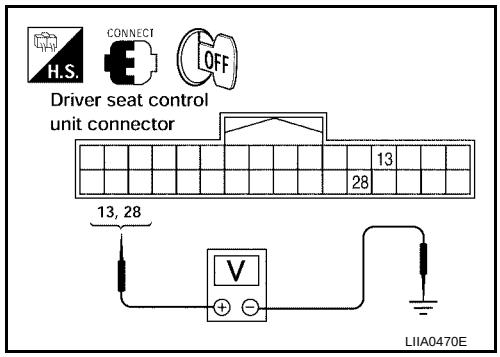

OK or NG

OK >> Front lifting switch circuit is OK.
NG >> GO TO 2.

2. CHECK POWER SEAT SWITCH HARNESS CONTINUITY

1. Disconnect driver seat control unit and power seat switch LH.
2. Check continuity between driver seat control unit connector P2 terminals 13, 28 and driver seat switch connector P8 terminals 5, 6.

   13 (W) – 6 (W) : Continuity should exist.
   28 (BR) – 5 (BR) : Continuity should exist.

3. Check continuity between driver seat control unit connector P2 terminals 13, 28 and ground

   13 (W) – Ground : Continuity should not exist.
   28 (BR) – Ground : Continuity should not exist.

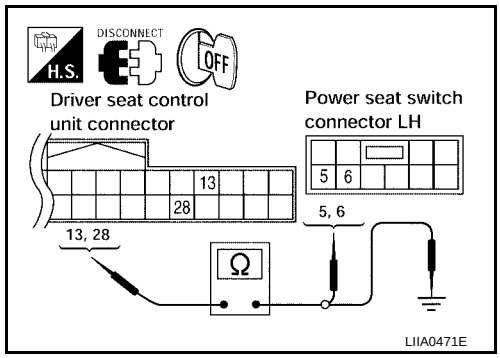

OK or NG

OK >> GO TO 3.
NG >> Repair or replace harness.

3. CHECK FRONT LIFTING SWITCH

Check continuity between power seat switch LH terminals as follows.

Terminals (+)	Terminals (–)	Condition	Continuity
5	9	Front lifting switch ON (UP operation)	Yes
		Other than above	No
6		Front lifting switch ON (DOWN operation)	Yes
		Other than above	No

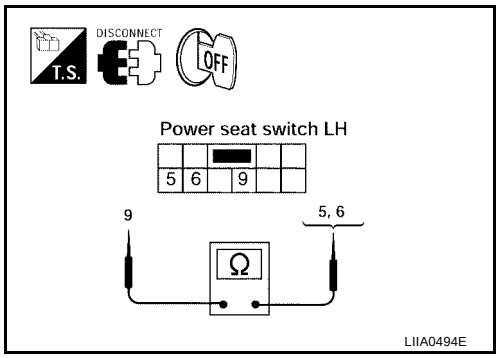

OK or NG

OK >> Check the condition of the harness and connector.
NG >> Replace power seat switch LH.

REAR LIFTING SWITCH CIRCUIT INSPECTION

1. CHECK FUNCTION

With CONSULT-II

With “LIFT RR SW-UP, LIFT RR SW-DN” on the DATA MONITOR, operate the rear lifting switch to check ON/OFF operation.

Monitor item [OPERATION or UNIT]		Contents
LIFT RR SW–UP	“ON/OFF”	Operation (ON)/open (OFF) status judged from the RR lifter switch (UP) signal is displayed.
LIFT RR SW–DN	“ON/OFF”	Operation (ON)/open (OFF) status judged from the RR lifter switch (DOWN) signal is displayed.

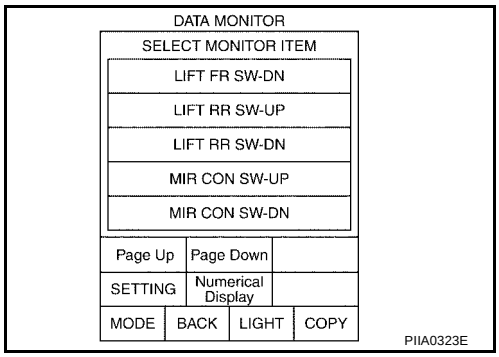

Without CONSULT-II

1. Turn ignition switch OFF.
2. Check voltage between driver seat control unit connector and ground.

Connector	Terminals (Wire color) (+)	Terminals (Wire color) (–)	Condition	Voltage (V) (Approx.)
P2	14 (GR)	Ground	Rear lifting switch ON (DOWN operation)	0
			Other than above	Battery voltage
	29 (Y/R)		Rear lifting switch ON (UP operation)	0
			Other than above	Battery voltage

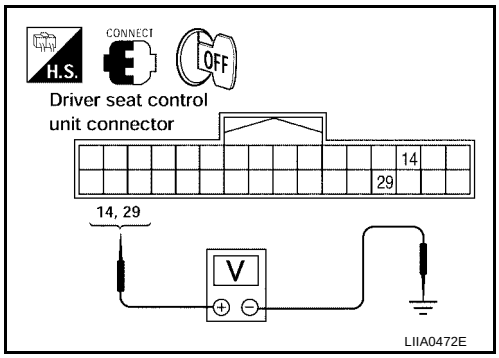

OK or NG

OK >> Rear seat lifting switch circuit is OK.
NG >> GO TO 2.

2. CHECK POWER SEAT SWITCH HARNESS CONTINUITY

1. Disconnect driver seat control unit and power seat switch LH.
2. Check continuity between driver seat control unit connector P2 terminals 14, 29 and power seat switch connector P8 terminals 7, 8.

   14 (GR) – 8 (GR) : Continuity should exist.

   29 (Y/R) – 7 (Y/R) : Continuity should exist.

3. Check continuity between driver seat control unit connector P2 terminals 14, 29 and ground.

   14 (GR) – Ground : Continuity should not exist.

   29 (Y/R) – Ground : Continuity should not exist.

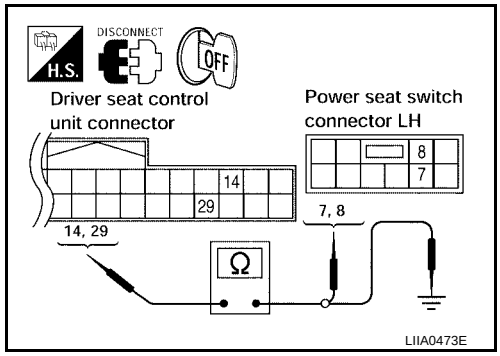

OK or NG

OK >> GO TO 3.
NG >> Repair or replace harness.

3. CHECK REAR LIFTING SWITCH

Check continuity between power seat switch LH terminals as follows.

Terminals (+)	Terminals (–)	Condition	Continuity
8	9	Rear lifting switch ON (DOWN operation)	Yes
		Other than above	No
7		Rear lifting switch ON (UP operation)	Yes
		Other than above	No

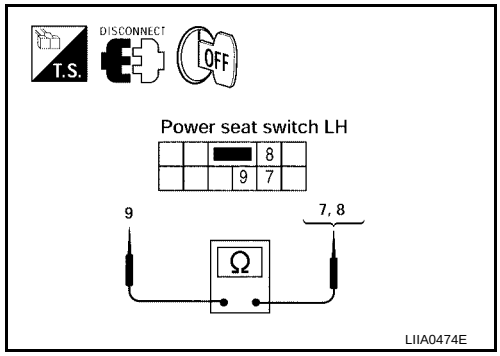

OK or NG

OK >> Check the condition of the harness and connector.
NG >> Replace power seat switch LH.

POWER SEAT SWITCH GROUND INSPECTION

1. CHECK POWER SEAT SWITCH GROUND CIRCUIT

1. Turn ignition switch OFF.
2. Disconnect power seat switch LH.
3. Check continuity between power seat switch LH connector P8 terminal 9 and ground.

   9 (B) – Ground : Continuity should exist.

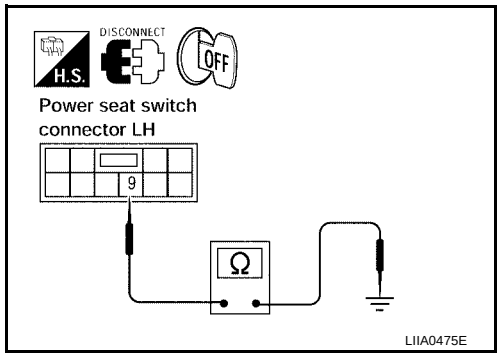

OK or NG

OK >> Check the condition of the harness and connector.
NG >> Repair or replace harness.

DOOR MIRROR REMOTE CONTROL SWITCH (CHANGEOVER SWITCH) CIRCUIT CHECK (EARLY PRODUCTION)

1. CHECK FUNCTION

With CONSULT-II

Check operation with “MIR CHNG SW-R, MIR CHNG SW-L” on the DATA MONITOR to make sure pulse changes.

Monitor item [OPERATION or UNIT		
“MIR CHNG SW-R	"ON/OFF"	ON/OFF status judged from the door mirror remote control switch (switching to RIGHT) signal is displayed.
MIR CHNG SW-L	"ON/OFF"	ON/OFF status judged from the door mirror remote control switch (switching to LEFT) signal is displayed.

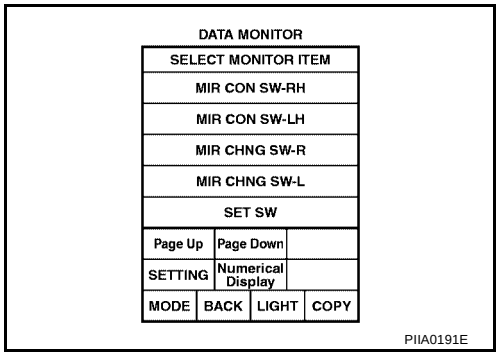

Without CONSULT-II

1. Turn ignition switch to ACC.
2. Check voltage between automatic drive positioner control unit connector and ground.

Connector	Terminals (Wire color)		Condition	Voltage (V) (Approx.)
	(+)	(–)		
M41	2 (LG/R)	Ground	Changeover switch RIGHT position	0
			Other than above	5
	18 (L)		Changeover switch LEFT position	0
			Other than above	5

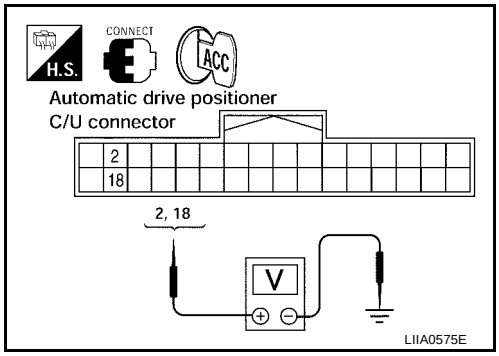

OK or NG

OK >> Door mirror remote control switch (changeover switch) circuit is OK.
NG >> GO TO 2.

2. CHECK DOOR MIRROR REMOTE CONTROL SWITCH CIRCUIT HARNESS CONTINUITY

1. Turn ignition switch OFF.
2. Disconnect automatic drive positioner control unit and door mirror remote control switch.
3. Check continuity between automatic drive positioner control unit connector M41 terminals 2, 18 and door mirror remote control swich connector M251 terminals 5, 6.

   2 (LG/R) – 5 (LG/R) : Continuity should exist.
   18 (L) – 6 (L/R) : Continuity should exist.

4. Check continuity between driver seat control unit connector M41 terminals 2, 18 and ground.

   2 (LG/R) – Ground : Continuity should not exist.
   18 (L) – Ground : Continuity should not exist.

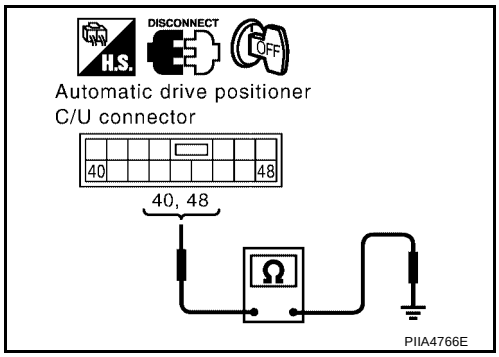

OK or NG

OK >> GO TO 3.
NG >> Repair or replace harness.

3. CHECK DOOR MIRROR REMOTE CONTROL SWITCH (CHANGEOVER SWITCH)

Check continuity between door mirror remote control switch terminals as follows.

Terminals		Condition	Continuity
(+)	(–)		
5	7	Changeover switch LEFT position	Yes
		Other than above	No
6		Changeover switch RIGHT position	Yes
		Other than above	No

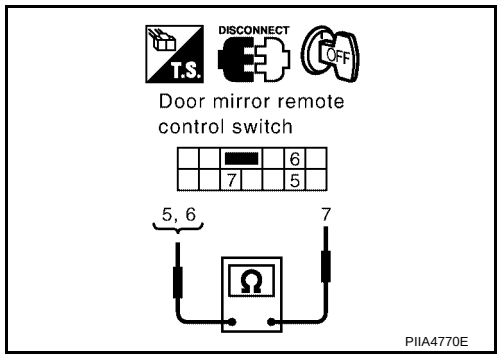

OK or NG

OK >> Check the condition of the harness and the connector.
NG >> Replace door mirror remote control switch.

DOOR MIRROR REMOTE CONTROL SWITCH (MIRROR SWITCH) CIRCUIT CHECK (EARLY PRODUCTION)

1. CHECK FUNCTION

With CONSULT-II

Check operation with MIR CON SW-UP/DN, MIR CON SW-RH/LH" on the DATA MONITOR to make sure pulse changes.

Monitor item [OPERATION or UNIT		
MIR CON SW-UP	"ON/OFF"	ON/OFF status judged from the door mirror remote control switch (UP) signal is displayed.
MIR CON SW-DN	"ON/OFF"	ON/OFF status judged from the door mirror remote control switch (DOWN) signal is displayed.
MIR CON SW-RH	"ON/OFF"	ON/OFF status judged from the door mirror remote control switch (RIGHT) signal is displayed.
MIR CON SW-LH	"ON/OFF"	ON/OFF status judged from the door mirror remote control switch (LEFT) signal is displayed.

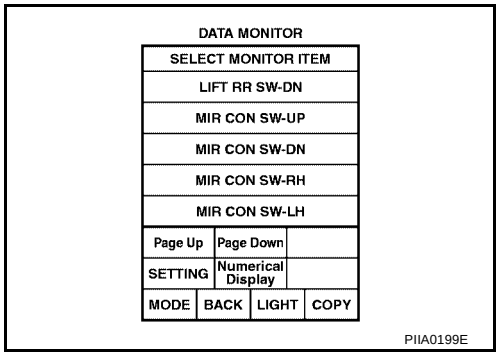

Without CONSULT-II

1. Turn ignition switch to ACC.
2. Check voltage between automatic drive positioner control unit connector and ground.

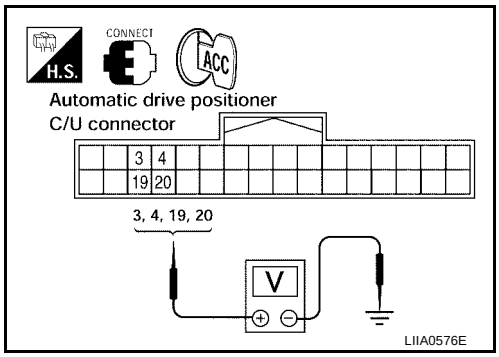

Connector	Terminals (Wire color) (+)	Terminals (Wire color) (–)	Condition	Voltage (V) (Approx.)
M41	3 (Y/B)	Ground	Mirror switch UP operation	0
			Other than above	5
	4 (V/W)		Mirror switch LEFT operation	0
			Other than above	5
	19 (L/B)		Mirror switch DOWN operation	0
			Other than above	5
	20 (BR/Y)		Mirror switch RIGHT operation	0
			Other than above	5

OK or NG

OK >> Door mirror remote control switch (mirror switch) circuit is OK.
NG >> GO TO 2.

2. CHECK DOOR MIRROR REMOTE CONTROL SWITCH CIRCUIT HARNESS CONTINUITY

1. Turn ignition switch OFF.
2. Disconnect automatic drive positioner control unit and door mirror remote control switch.
3. Check continuity between automatic drive positioner control unit connector M41 terminals 3, 4, 19, 20 and door mirror remote control switch connector M251 terminals 1, 2, 3, 4.

3 (Y/B) – 3 (Y/B) : Continuity should exist.
4 (V/W) – 2 (V/W) : Continuity should exist.
19 (L/B) – 4 (L/B) : Continuity should exist.
20 (BR/Y) – 1 (BR/Y) : Continuity should exist.

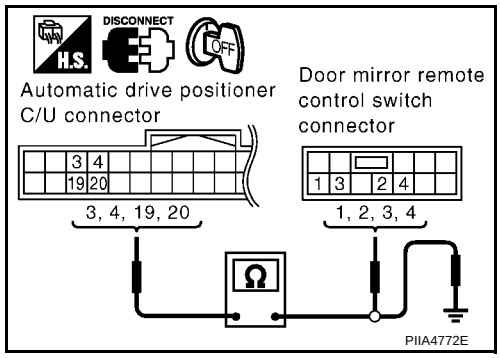

4. Check continuity between automatic drive positioner control unit connector M41 terminals 3, 4, 19, 20 and ground.

3 (Y/B) – Ground : Continuity should not exist.
4 (V/W) – Ground : Continuity should not exist.
19 (L/B) – Ground : Continuity should not exist.
20 (BR/Y) – Ground : Continuity should not exist.

OK or NG

OK >> GO TO 3.
NG >> Repair or replace harness.

3. CHECK DOOR MIRROR REMOTE CONTROL SWITCH (MIRROR SWITCH)

Check continuity between door mirror remote control switch terminals as follows.

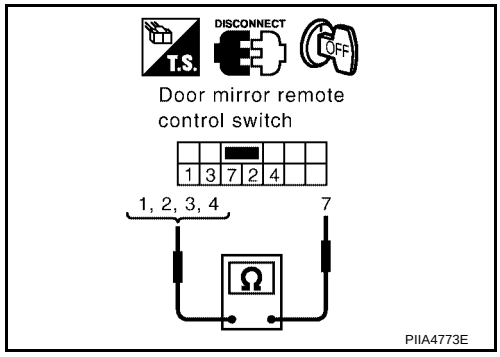

Terminals (+)	Terminals (–)	Condition	Continuity
1	7	Mirror switch RIGHT operation	Yes
		Other than above	No
2		Mirror switch LEFT operation	Yes
		Other than above	No
3		Mirror switch UP operation	Yes
		Other than above	No
4		Mirror switch DOWN operation	Yes
		Other than above	No

OK or NG

OK >> Check the condition of the harness and the connector.
NG >> Replace door mirror remote control switch.

DOOR MIRROR REMOTE CONTROL SWITCH GROUND CIRCUIT CHECK (EARLY PRODUCTION)

1. CHECK DOOR MIRROR REMOTE CONTROL SWITCH GROUND CIRCUIT

Check continuity between door mirror remote control switch connector M251 terminal 7 and ground.

7 (B) – Ground : Continuity should exist.

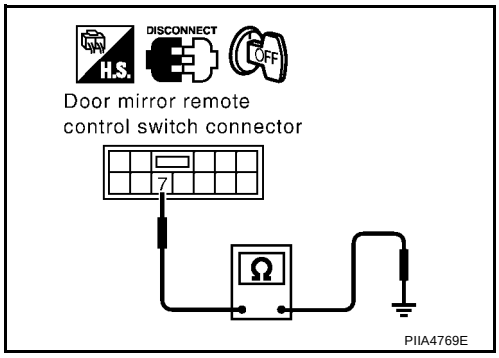

OK or NG

OK >> GO TO 2.
NG >> Repair or replace harness.

2. CHECK DOOR MIRROR REMOTE CONTROL SWITCH GROUND CIRCUIT

Check continuity between door mirror remote control switch terminals as follows.

Terminals		Condition	Continuity
(+)	(–)		
5	7	Changeover switch RIGHT position	Yes
		Other than above	No
6		Changeover switch LEFT position	Yes
		Other than above	No

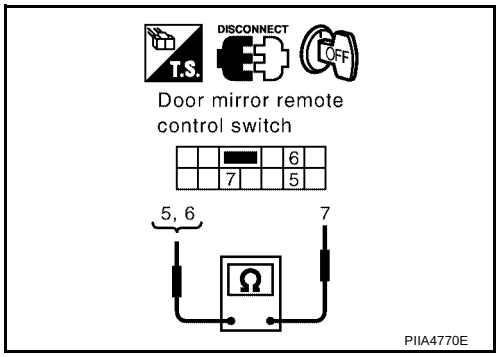

OK or NG

OK >> Check the condition of the harness and the connector.
NG >> Replace door mirror remote control switch.

DOOR MIRROR REMOTE CONTROL SWITCH (CHANGEOVER SWITCH) CIRCUIT CHECK (LATE PRODUCTION)

1. CHECK FUNCTION

With CONSULT-II

Check operation with “MIR CHNG SW - R, MIR CHNG SW - L” on the DATA MONITOR to make sure pulse changes.

Monitor item [OPERATION or UNIT		
“MIR CHNG SW - R	"ON/OFF"	ON/OFF status judged from the door mirror remote control switch (switching to RIGHT) signal is displayed.
MIR CHNG SW - L	"ON/OFF"	ON/OFF status judged from the door mirror remote control switch (switching to LEFT) signal is displayed.

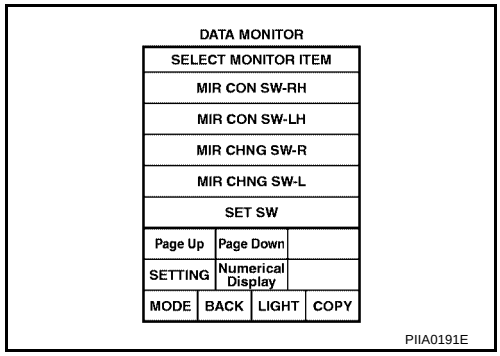

Without CONSULT-II

1. Turn ignition switch to ACC.
2. Check voltage between automatic drive positioner control unit connector and ground.

Connector	Terminals (Wire color) (+)	Terminals (Wire color) (–)	Condition	Voltage (V) (Approx.)
M41	2 (LG/R)	Ground	Changeover switch RIGHT position	0
			Other than above	5
	18 (L)		Changeover switch LEFT position	0
			Other than above	5

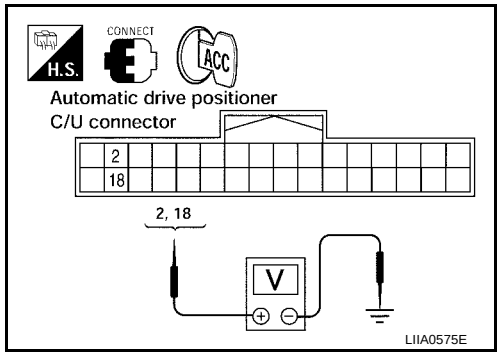

OK or NG

OK >> Door mirror remote control switch (changeover switch) circuit is OK.
NG >> GO TO 2.

2. CHECK DOOR MIRROR REMOTE CONTROL SWITCH CIRCUIT HARNESS CONTINUITY

1. Turn ignition switch OFF.
2. Disconnect automatic drive positioner control unit and door mirror remote control switch.
3. Check continuity between automatic drive positioner control unit connector M41 terminals 2, 18 and door mirror remote control swich connector M7 terminals 2, 3.

2 (LG/R) – 3 (LG/R) : Continuity should exist.
18 (L) – 2 (L) : Continuity should exist.

4. Check continuity between automatic drive positioner control unit connector M41 terminals 2, 18 and ground.

2 (LG/R) – Ground : Continuity should not exist.
18 (L) – Ground : Continuity should not exist.

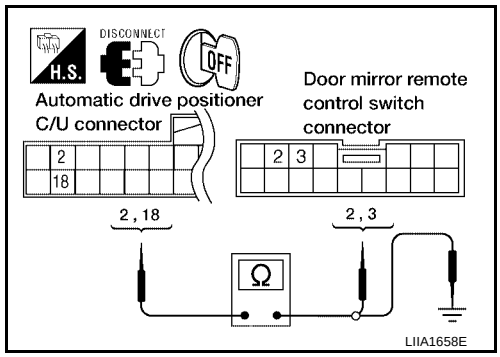

OK or NG

OK >> GO TO 3.
NG >> Repair or replace harness.

3. CHECK DOOR MIRROR REMOTE CONTROL SWITCH (CHANGEOVER SWITCH)

Check continuity between door mirror remote control switch terminals as follows.

Terminals		Condition	Continuity
(+)	(–)		
2	13	Changeover switch LEFT position	Yes
		Other than above	No
3		Changeover switch RIGHT position	Yes
		Other than above	No

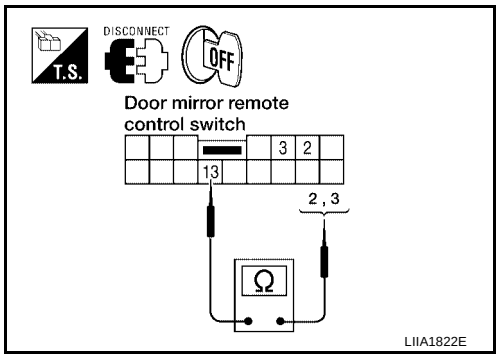

OK or NG

OK >> Check the condition of the harness and the connector.
NG >> Replace door mirror remote control switch.

DOOR MIRROR REMOTE CONTROL SWITCH (MIRROR SWITCH) CIRCUIT CHECK (LATE PRODUCTION)

1. CHECK FUNCTION

With CONSULT-II

Check operation with MIR CON SW-UP/DN, MIR CON SW-RH/LH" on the DATA MONITOR to make sure pulse changes.

Monitor item [OPERATION or UNIT		
MIR CON SW-UP	"ON/OFF"	ON/OFF status judged from the door mirror remote control switch (UP) signal is displayed.
MIR CON SW-DN	"ON/OFF"	ON/OFF status judged from the door mirror remote control switch (DOWN) signal is displayed.
MIR CON SW-RH	"ON/OFF"	ON/OFF status judged from the door mirror remote control switch (RIGHT) signal is displayed.
MIR CON SW-LH	"ON/OFF"	ON/OFF status judged from the door mirror remote control switch (LEFT) signal is displayed.

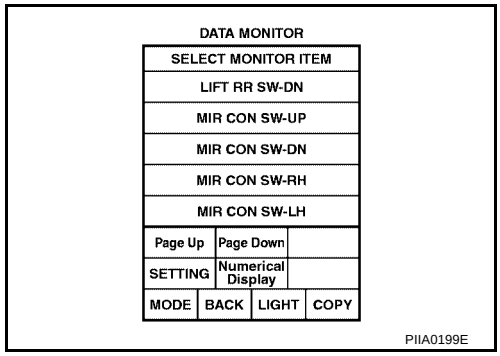

Without CONSULT-II

1. Turn ignition switch to ACC.
2. Check voltage between automatic drive positioner control unit connector and ground.

Connector	Terminals (Wire color) (+)	Terminals (Wire color) (–)	Condition	Voltage (V) (Approx.)
M41	3 (Y/B)	Ground	Mirror switch UP operation	0
			Other than above	5
	4 (V/W)		Mirror switch LEFT operation	0
			Other than above	5
	19 (L/B)		Mirror switch DOWN operation	0
			Other than above	5
	20 (BR/Y)		Mirror switch RIGHT operation	0
			Other than above	5

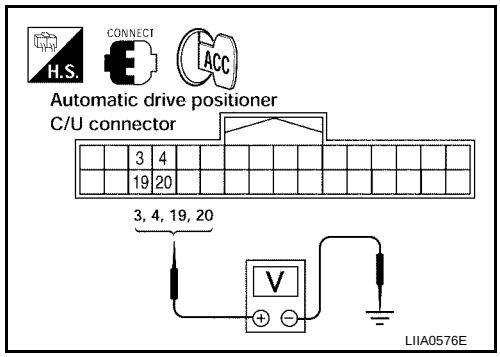

OK or NG

OK >> Door mirror remote control switch (mirror switch) circuit is OK.
NG >> GO TO 2.

2. CHECK DOOR MIRROR REMOTE CONTROL SWITCH CIRCUIT HARNESS CONTINUITY

1. Turn ignition switch OFF.
2. Disconnect automatic drive positioner control unit and door mirror remote control switch.
3. Check continuity between automatic drive positioner control unit connector M41 terminals 3, 4, 19, 20 and door mirror remote control switch connector M7 terminals 4, 4, 6, 14.

3 (Y/B) – 6 (Y/B) : Continuity should exist.
4 (V/W) – 5 (V/W) : Continuity should exist.
19 (L/B) – 14 (L/B) : Continuity should exist.
20 (BR/Y) – 4 (BR/Y) : Continuity should exist.

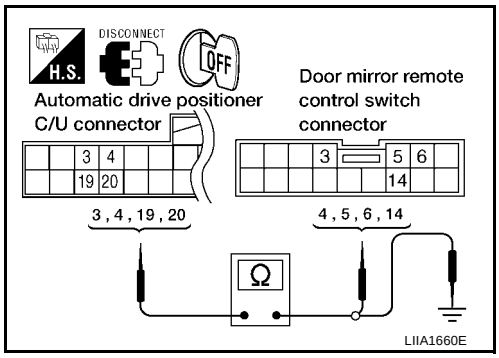

4. Check continuity between automatic drive positioner control unit connector M41 terminals 3, 4, 19, 20 and ground.

3 (Y/B) – Ground : Continuity should not exist.
4 (V/W) – Ground : Continuity should not exist.
19 (L/B) – Ground : Continuity should not exist.
20 (BR/Y) – Ground : Continuity should not exist.

OK or NG

OK >> GO TO 3.
NG >> Repair or replace harness.

3. CHECK DOOR MIRROR REMOTE CONTROL SWITCH (MIRROR SWITCH)

Check continuity between door mirror remote control switch terminals as follows.

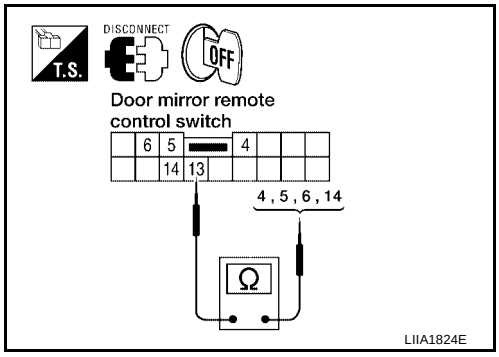

Terminals		Condition	Continuity
(+)	(–)		
4	13	Mirror switch RIGHT operation	Yes
		Other than above	No
5		Mirror switch LEFT operation	Yes
		Other than above	No
6		Mirror switch UP operation	Yes
		Other than above	No
14		Mirror switch DOWN operation	Yes
		Other than above	No

OK or NG

OK >> Check the condition of the harness and the connector.
NG >> Replace door mirror remote control switch.

DOOR MIRROR REMOTE CONTROL SWITCH GROUND CIRCUIT CHECK (LATE PRODUCTION)

1. CHECK DOOR MIRROR REMOTE CONTROL SWITCH GROUND CIRCUIT

Check continuity between door mirror remote control switch connector M7 terminal 13 and ground.

13 (B) – Ground : Continuity should exist.

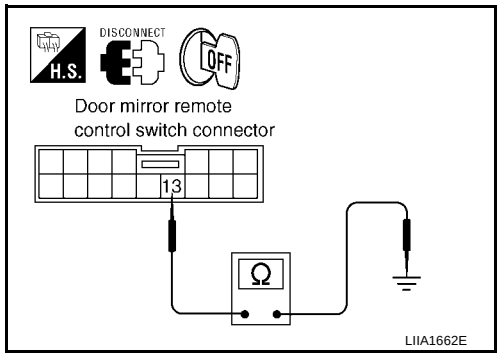

OK or NG

OK >> GO TO 2.
NG >> Repair or replace harness.

2. CHECK DOOR MIRROR REMOTE CONTROL SWITCH GROUND CIRCUIT

Check continuity between door mirror remote control switch terminals as follows.

Terminals (+)	Terminals (–)	Condition	Continuity
3	13	Changeover switch RIGHT position	Yes
		Other than above	No
2		Changeover switch LEFT position	Yes
		Other than above	No

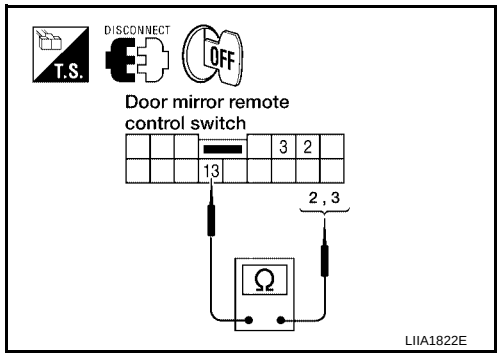

OK or NG

OK >> Check the condition of the harness and the connector.
NG >> Replace door mirror remote control switch.

ADP STEERING TELESCOPIC SWITCH CIRCUIT INSPECTION

1. CHECK FUNCTION

With CONSULT-II

With “TELESCO SW-FR, TELESCO SW-RR” on the DATA MONITOR, operate the ADP steering telescopic switch to check ON/OFF operation.

Monitor item [OPERATION or UNIT]		Contents
TELESCO SW–FR	“ON/OFF”	Operation (ON)/open (OFF) status judged from the telescopic switch (FR) signal is displayed.
TELESCO SW–RR	“ON/OFF”	Operation (ON)/open (OFF) status judged from the telescopic switch (RR) signal is displayed.

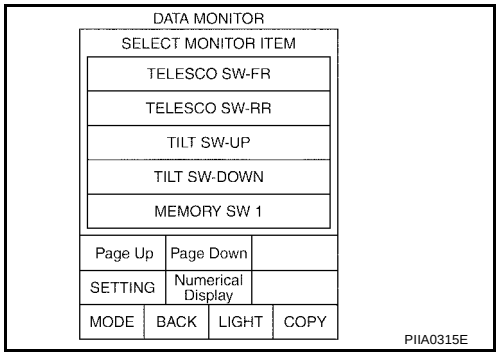

Without CONSULT-II

1. Turn ignition switch OFF.
2. Check voltage between automatic drive positioner control unit connector and ground.

Connector	Terminals (Wire color) (+)	(–)	Condition	Voltage (V) (Approx.)
M41	11 (P/L)	Ground	Telescopic switch ON (FORWARD operation)	0
			Other than above	5
	27 (G/W)		Telescopic switch ON (BACKWARD operation)	0
			Other than above	5

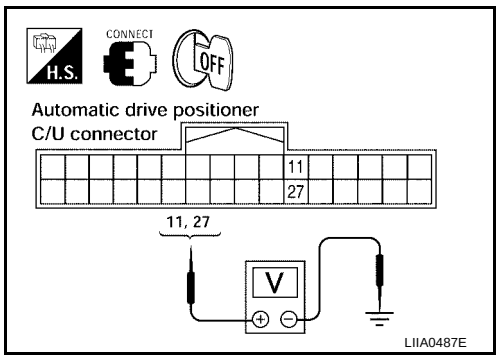

OK or NG

OK >> ADP steering telescopic switch circuit is OK.
NG >> GO TO 2.

2. CHECK ADP STEERING TELESCOPIC SWITCH HARNESS CONTINUITY

1. Disconnect automatic drive positioner control unit and ADP steering switch.
2. Check continuity between automatic drive positioner control unit connector M41 terminals 11, 27 and ADP steering switch connector M16 terminals 4, 5.

   11 (P/L) – 5 (P/L) : Continuity should exist.
   27 (G/W) – 4 (G/W) : Continuity should exist.

3. Check continuity between automatic drive positioner control unit connector M41 terminals 11, 27 and ground.

   11 (P/L) – Ground : Continuity should not exist.
   27 (G/W) – Ground : Continuity should not exist.

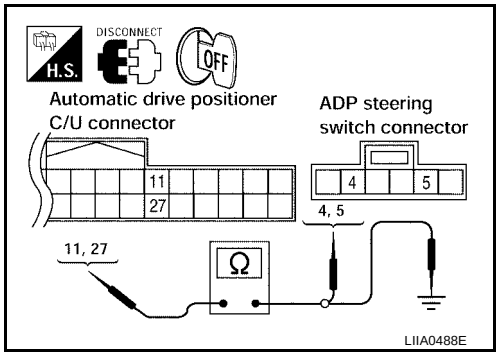

OK or NG

OK >> GO TO 3.
NG >> Repair or replace harness.

3. CHECK ADP STEERING TELESCOPIC SWITCH

Check continuity between ADP steering switch terminals as follows.

Terminals		Condition	Continuity
(+)	(–)		
4	1	Telescopic switch ON (BACKWARD operation)	Yes
		Other than above	No
5		Telescopic switch ON (FORWARD operation)	Yes
		Other than above	No

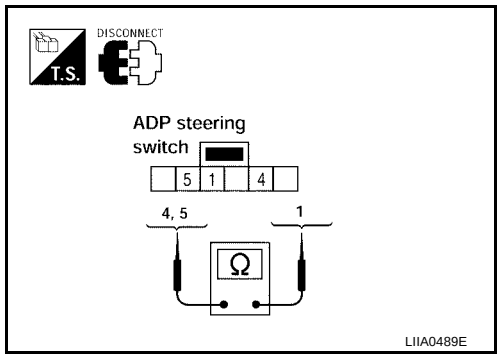

OK or NG

OK >> GO TO 4.
NG >> Replace ADP steering switch.

4. CHECK ADP STEERING TELESCOPIC SWITCH GROUND CIRCUIT

Check continuity between ADP steering switch connector M16 terminal 1 and ground.

1 (B) – Ground : Continuity should exist.

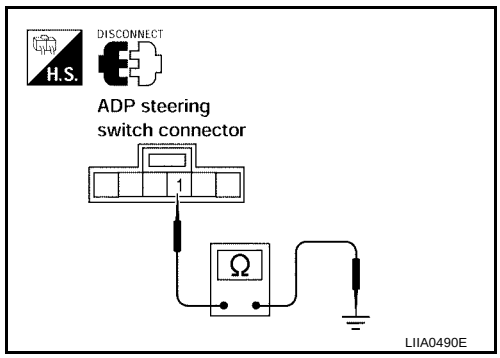

OK or NG

OK >> Check the condition of the harness and connector.
NG >> Replace or replace harness.

ADP STEERING TILT SWITCH CIRCUIT INSPECTION

1. CHECK FUNCTION

With CONSULT-II

With “TILT SW-UP, TILT SW-DOWN” on the DATA MONITOR, operate the ADP steering wheel tilt switch to check ON/OFF operation.

Monitor item [OPERATION or UNIT]		Contents
TILT SW-UP	“ON/OFF”	Operation (ON)/open (OFF) status judged from the tilt switch (FR) signal is displayed.
TILT SW-DOWN	“ON/OFF”	Operation (ON)/open (OFF) status judged from the tilt switch (RR) signal is displayed.

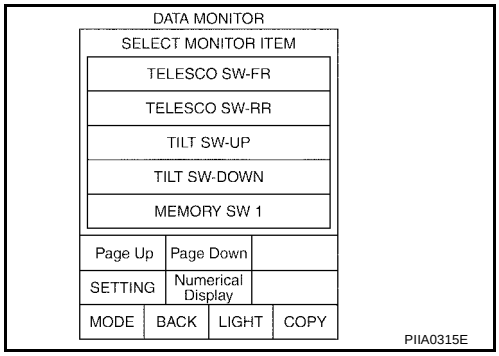

Without CONSULT-II

1. Turn ignition switch OFF.
2. Check voltage between automatic drive positioner control unit connector and ground.

Connector	Terminals (Wire color) (+)	Terminals (Wire color) (–)	Condition	Voltage (V) (Approx.)
M41	1 (Y/G)	Ground	Tilt switch ON (UP operation)	0
			Other than above	5
	17 (LG/B)		Tilt switch ON (DOWN operation)	0
			Other than above	5

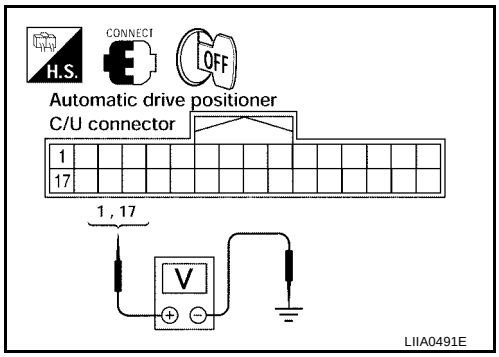

OK or NG

OK >> ADP steering tilt switch circuit is OK.
NG >> GO TO 2.

2. CHECK ADP STEERING TILT SWITCH HARNESS CONTINUITY

1. Disconnect automatic drive positioner control unit and ADP steering switch.
2. Check continuity between automatic drive positioner control unit connector M41 terminals 1, 17 and ADP steering switch connector M16 terminals 2, 3.

   1 (Y/G) – 2 (Y/G) : Continuity should exist.
   17 (LG/B) – 3 (LG/B) : Continuity should exist.

3. Check continuity between automatic drive positioner control unit connector M41 terminals 1, 17 and ground.

   1 (Y/G) – Ground : Continuity should not exist.
   17 (LG/B) – Ground : Continuity should not exist.

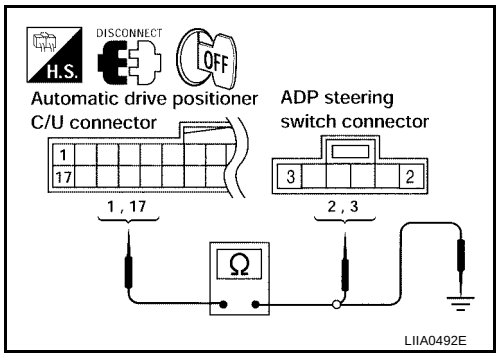

OK or NG

OK >> GO TO 3.
NG >> Repair or replace harness.

3. CHECK ADP STEERING TILT SWITCH

Check continuity between ADP steering switch terminals as follows.

Terminals (+)	Terminals (–)	Condition	Continuity
2	1	Tilt switch ON (UP operation)	Yes
		Other than above	No
3		Tilt switch ON (DOWN operation)	Yes
		Other than above	No

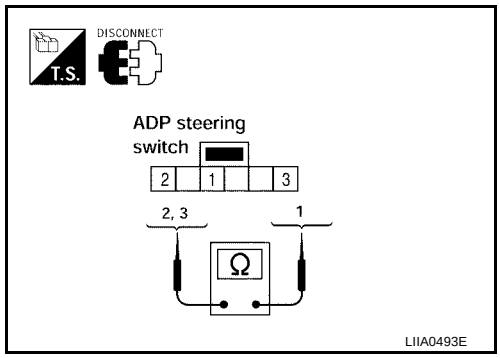

OK or NG

OK >> GO TO 4.
NG >> Replace ADP steering switch.

4. CHECK ADP STEERING TILT SWITCH GROUND CIRCUIT

Check continuity between ADP steering switch connector M16 terminal 1 and ground.

1 (B) – Ground : Continuity should exist.

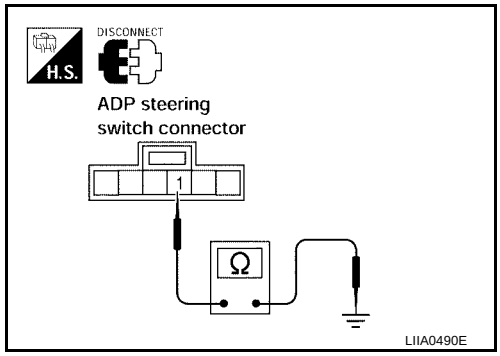

OK or NG

OK >> Check the condition of the harness and connector.
NG >> Replace or replace harness.

SEAT MEMORY INDICATOR LAMP CIRCUIT INSPECTION

1. CHECK FUNCTION

With CONSULT-II

With “MEMORY SW INDCTR” in ACTIVE TEST, check operation.

Test item	Description
MEMORY SW INDCTR	The memory switch indicator is lit by receiving the drive signal.

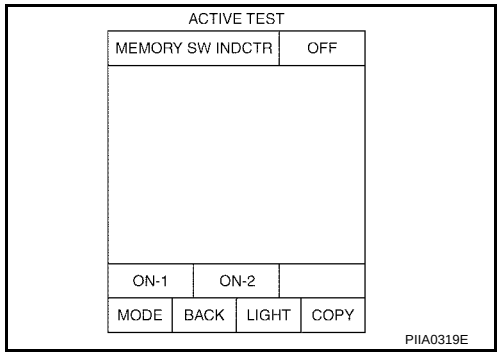

Without CONSULT-II

GO TO 2.

OK or NG

OK >> Seat memory indicator lamp circuit is OK.
NG >> GO TO 2.

2. CHECK SEAT MEMORY SWITCH POWER SUPPLY CIRCUIT

1. Turn ignition switch OFF.
2. Disconnect seat memory switch.
3. Check voltage between seat memory switch connector D5 terminal 5 and ground.

5 (Y/R) – Ground : Battery voltage

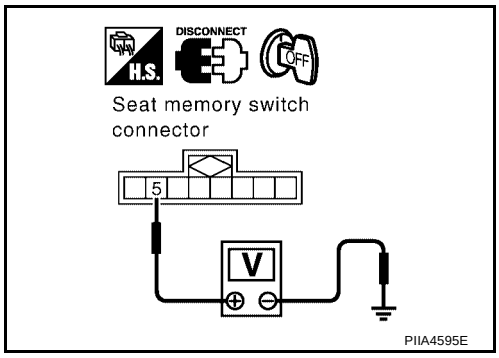

OK or NG

OK >> GO TO 3.
NG >> Repair or replace harness.

3. CHECK HARNESS CONTINUITY

1. Disconnect automatic drive positioner control unit.
2. Check continuity between automatic drive positioner control unit connector M41 terminals 12, 13 and seat memory switch connector D5 terminals 6, 7.

12 (O) – 6 (O) : Continuity should exist.
13 (P) – 7 (P) : Continuity should exist.

3. Check continuity between automatic drive positioner control unit connector M41 terminals 12, 13 and ground.

12 (O) – Ground : Continuity should not exist.
13 (P) – Ground : Continuity should not exist.

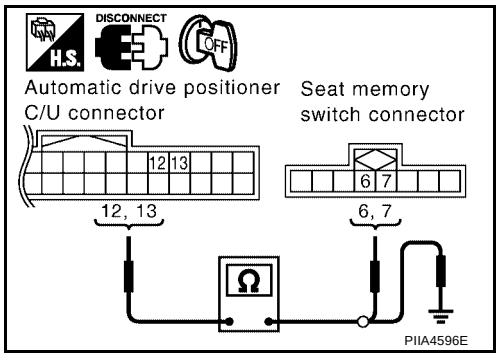

OK or NG

OK >> GO TO 4.
NG >> Repair or replace harness.

4. CHECK SEAT MEMORY SWITCH INDICATOR SIGNAL

1. Connect seat memory switch.
2. Check voltage between automatic drive positioner control unit connector M41 terminals 12, 13 and ground.

12 (O) – Ground : Battery voltage
13 (P) – Ground : Battery voltage

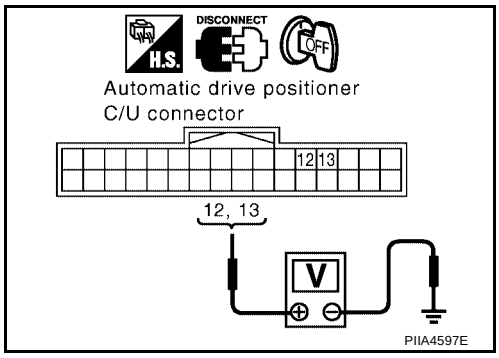

OK or NG

OK >> Replace automatic drive positioner control unit.
NG >> Replace seat memory switch.

UART COMUNICATION LINE CIRCUIT INSPECTION

1. CHECK UART LINE HARNESS

1. Turn ignition switch OFF.
2. Disconnect driver seat control unit and automatic drive positioner control unit.
3. Check continuity between driver seat control unit connector P2 terminal 1, 17 and automatic drive positioner connector M41 terminal 10, 26.

   1 (W/B) – 10 (R) : Continuity should exist.
   17 (GR) – 26 (R/W) : Continuity should exist.

4. Check continuity between driver seat control unit connector P2 terminal 1, 17 and ground.

   1 (W/B) – Ground : Continuity should not exist.
   17 (GR) – Ground : Continuity should not exist.

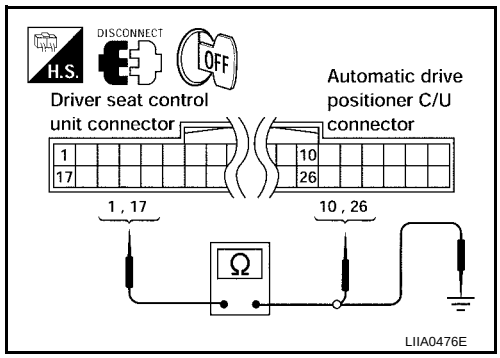

OK or NG

OK >> GO TO 2.
NG >> Repair or replace harness.

2. CHECK UART LINE INPUT/OUTPUT SIGNAL 1

Check signal between driver seat control unit connector and ground, with oscilloscope.

Connector	Terminals (Wire color) (+)	Terminals (Wire color) (–)	Condition	Signal
P2	17 (GR)	Ground	Seat memory switch ON (1 or 2 operation)	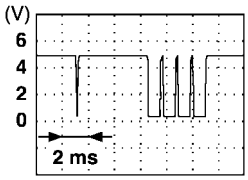 PIIA4814E

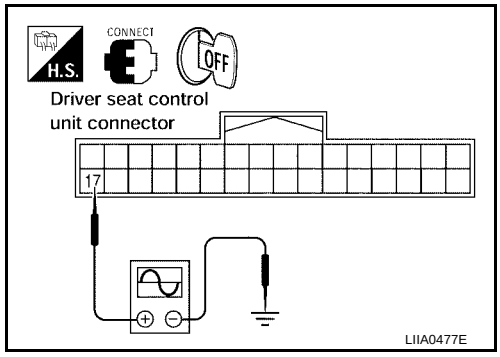

OK or NG

OK >> GO TO 3.
NG >> Replace driver seat control unit.

3. CHECK UART LINE INPUT/OUTPUT SIGNAL 2

Check signal between automatic driver positioner control unit connector ground, with oscilloscope.

Connector	Terminals (Wire color) (+)	Terminals (Wire color) (–)	Condition	Signal
M41	10 (R)	Ground	Seat memory switch ON (1 or 2 operation)	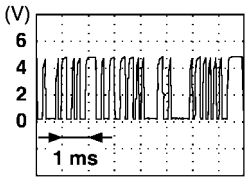 PIIA4813E

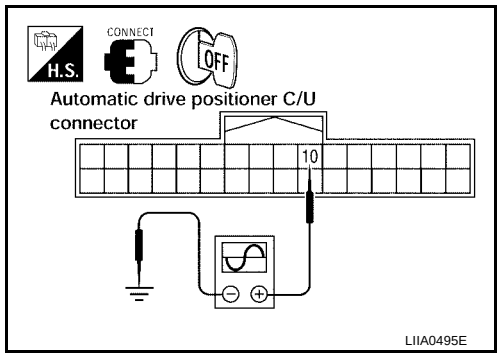

OK or NG

OK >> GO TO 4.
NG >> Replace automatic driver positioner control unit.

4. CHECK DRIVER SEAT CONTROL UNIT

Does the automatic drive positioner function when the driver control unit is exchanged?

YES or NO

YES >> Replace driver seat control unit.
NN >> Replace automatic drive positioner control unit.

POWER SEAT

PFP:87016

Schematic

EIS003XF

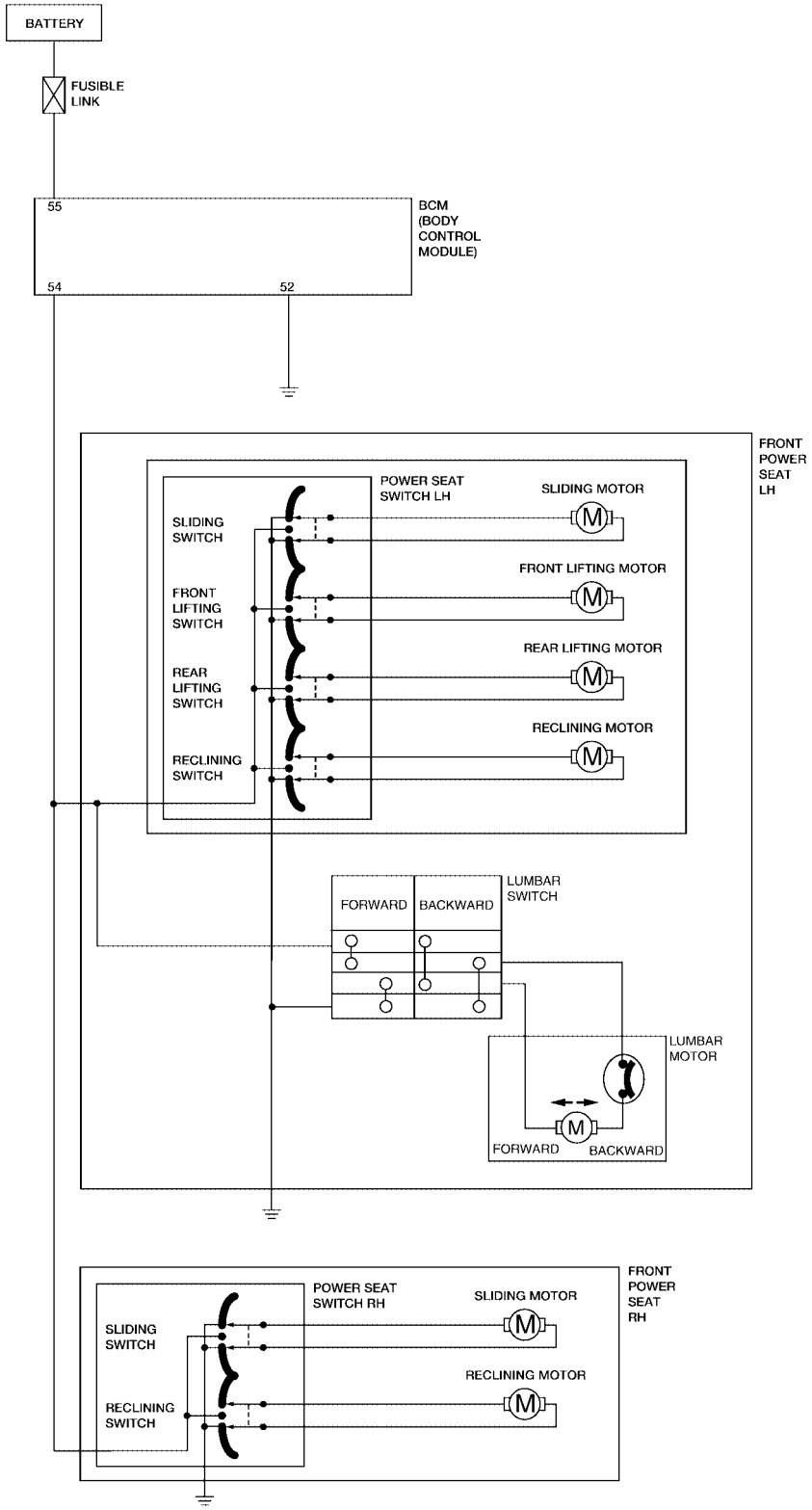

WIWA0352E

Wiring Diagram–SEAT–

EIS003XG

SE-SEAT-01

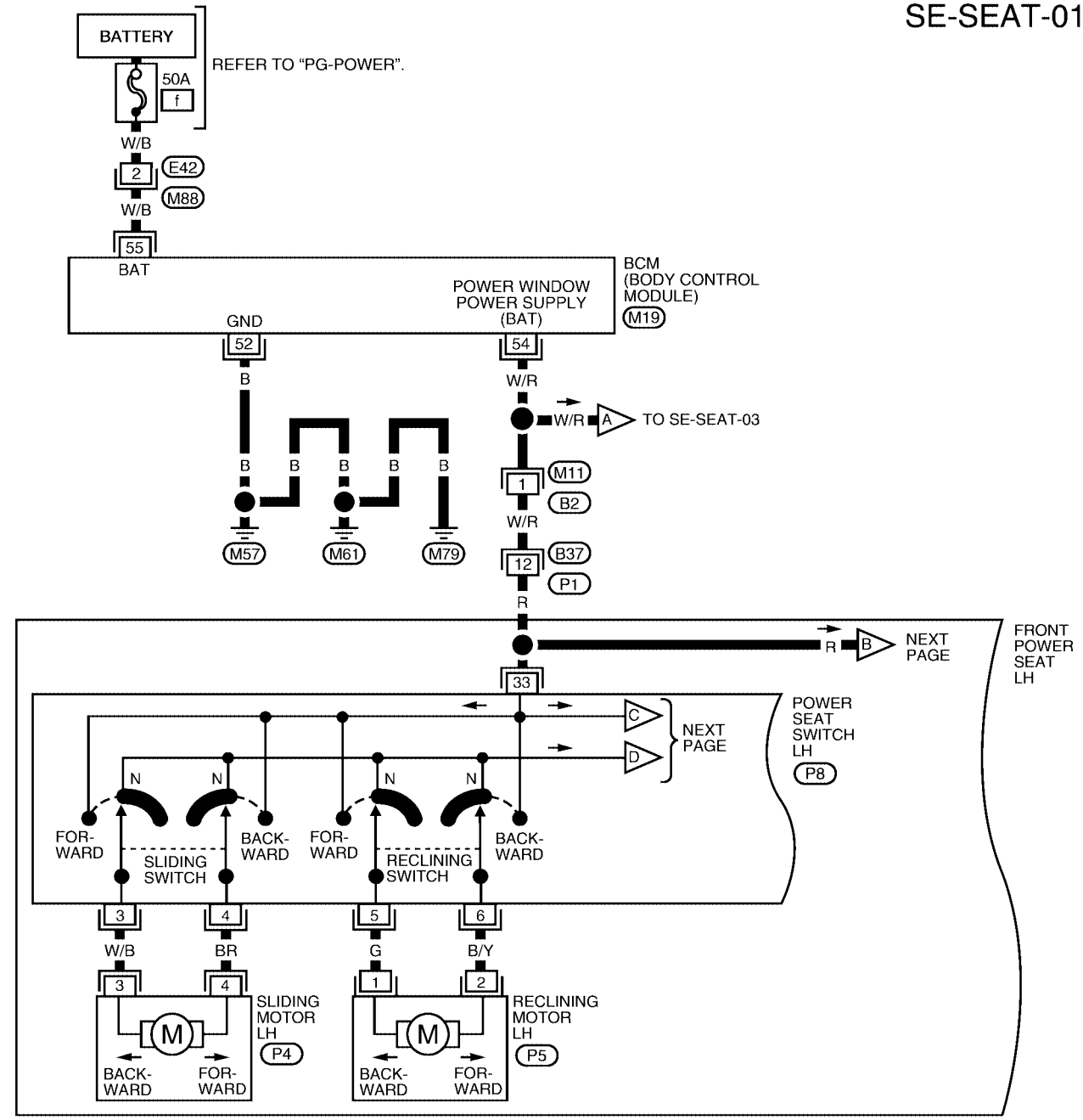

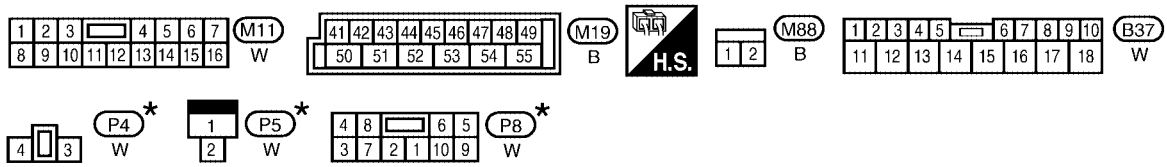

*: THIS CONNECTOR IS NOT SHOWN IN "HARNESS LAYOUT" OF PG SECTION.

WIWA0353E

SE-SEAT-02

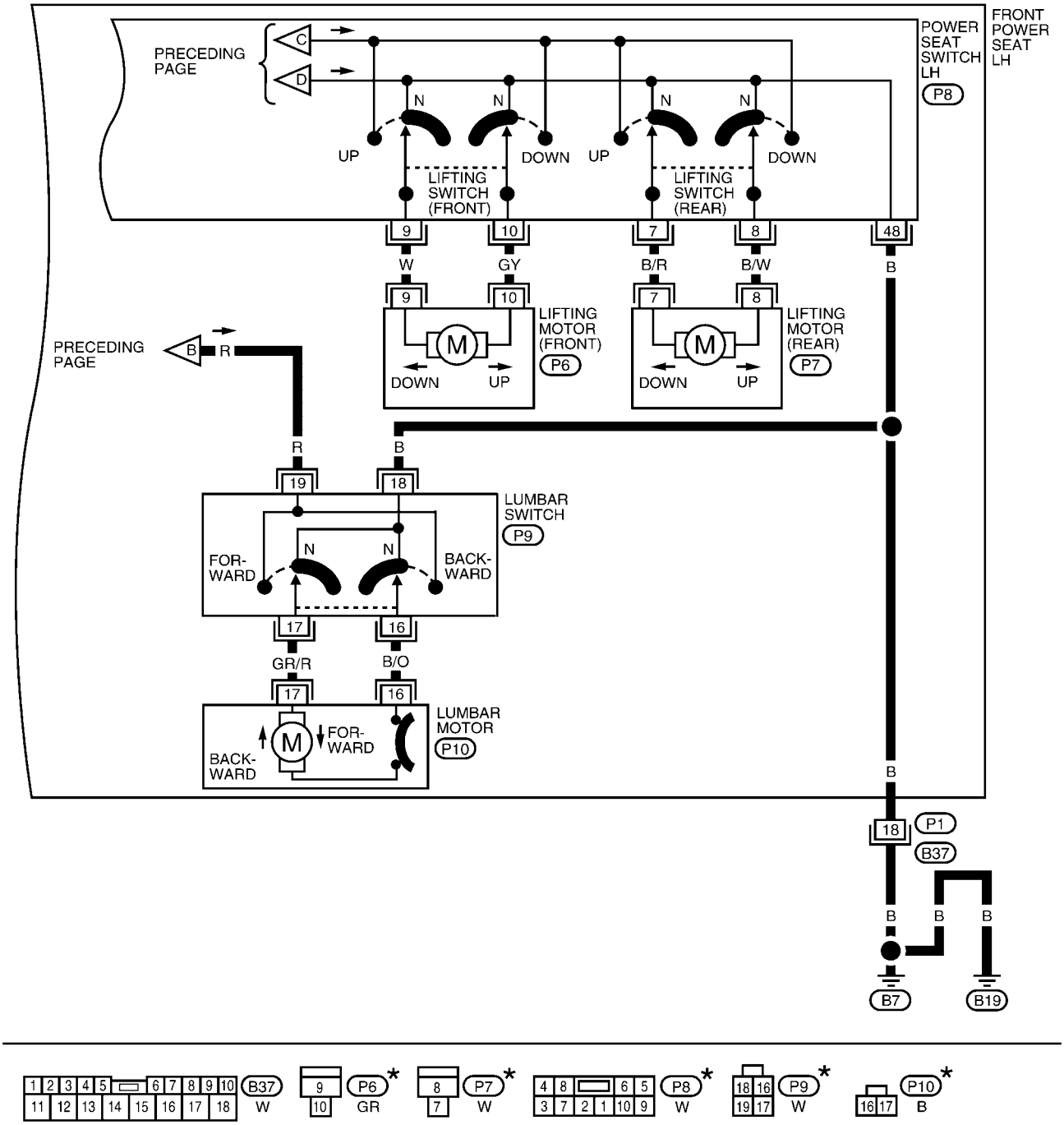

★: THIS CONNECTOR IS NOT SHOWN IN "HARNESS LAYOUT" OF PG SECTION.

WIWA0354E

SE-SEAT-03

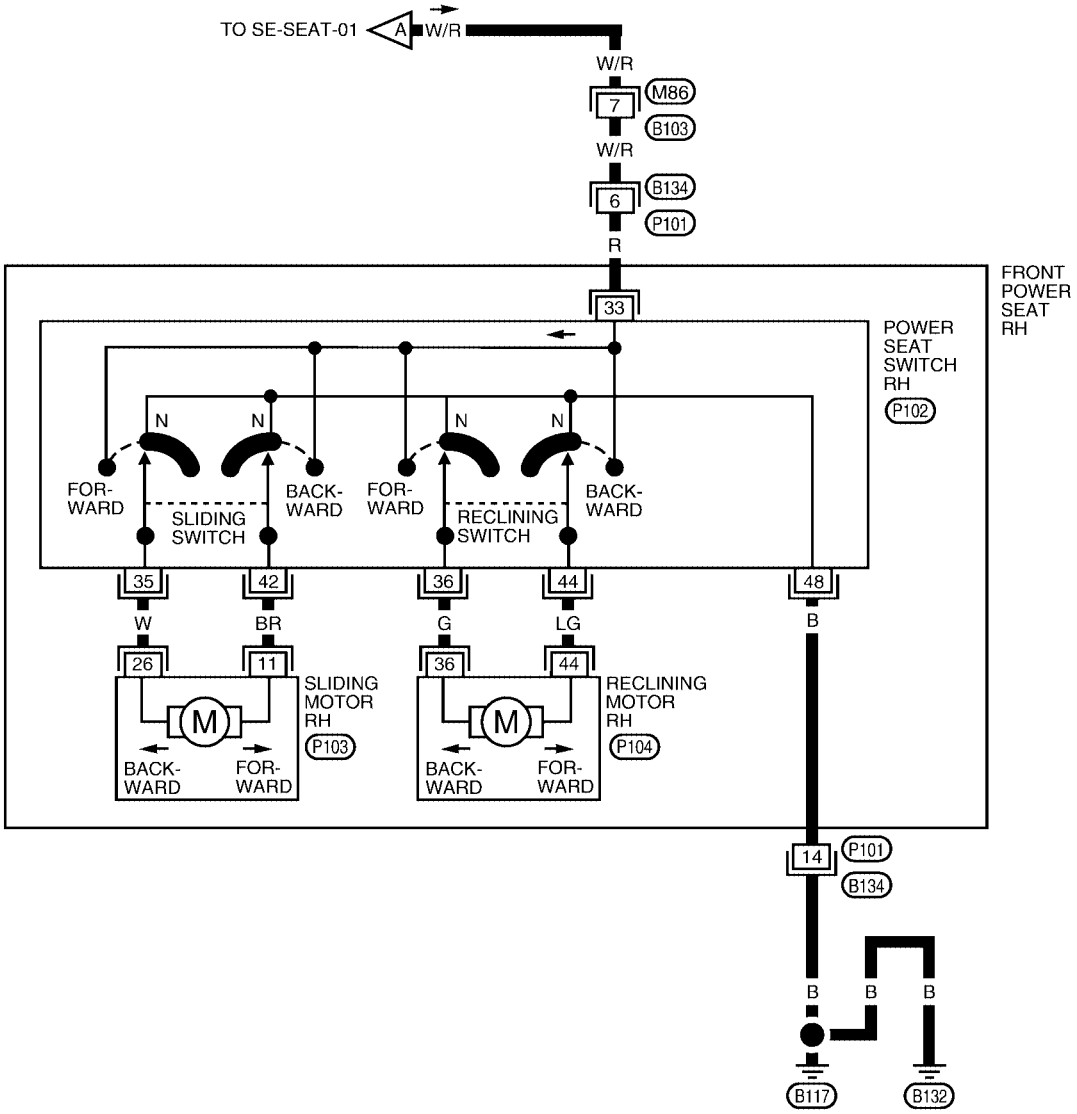

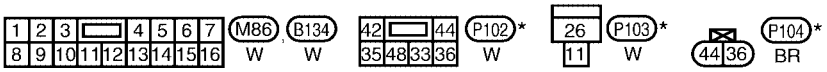

* : THIS CONNECTOR IS NOT SHOWN IN “HARNESS LAYOUT” OF PG SECTION.

WIWA0355E

HEATED SEAT

PFP:87335

Description

EIS003XH

- When handling seat, be extremely careful not to scratch heating unit.
- Do not use any organic solvent, such as thinner, benzene, alcohol, etc. to clean trim.

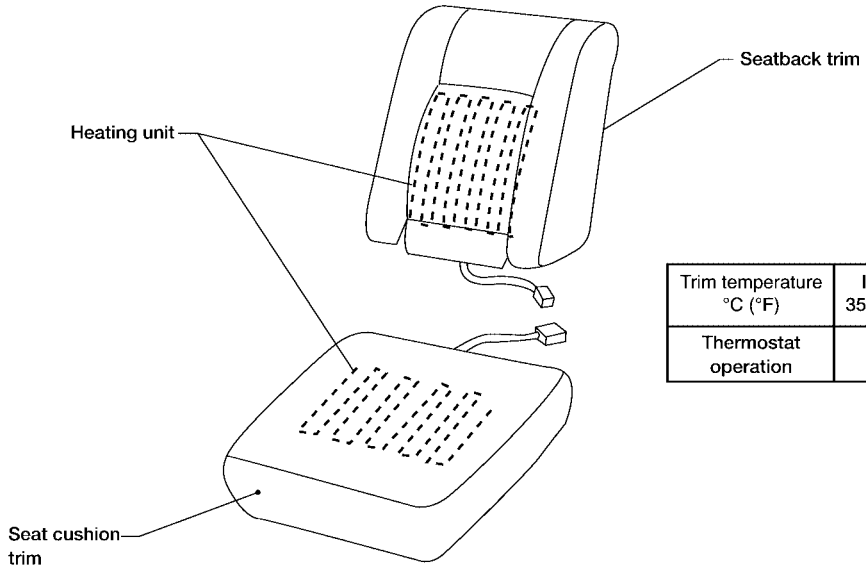

Trim temperature °C (°F)	Increasing to 35 - 45 (95 - 113)	Decreasing to 25 - 35 (77 - 95)
Thermostat operation	OFF	ON

Schematic

EIS003XI

WITH FRONT LEFT AND RIGHT HEATED SEATS

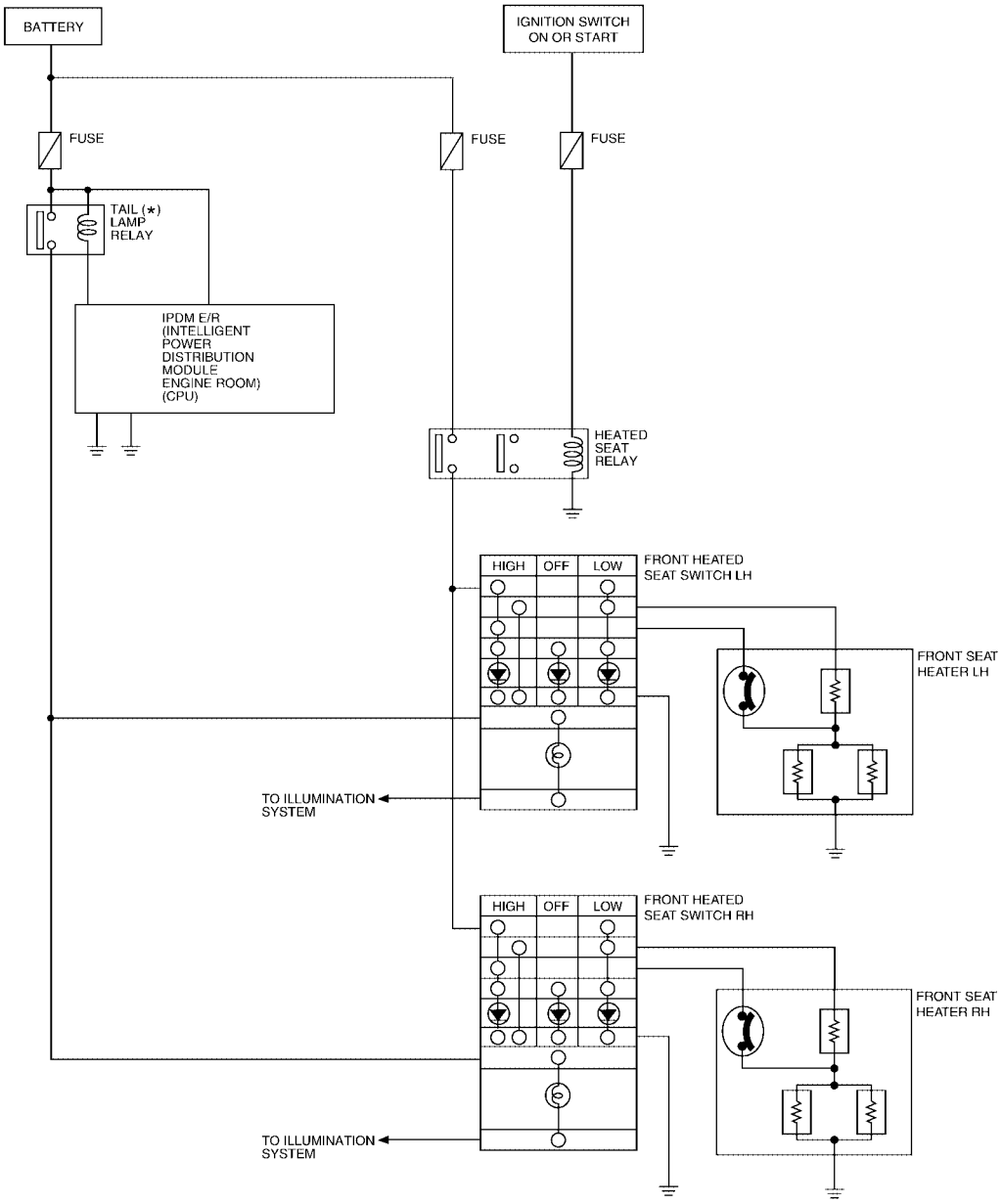

*: THIS RELAY IS BUILT INTO THE IPDM E/R (INTELLIGENT POWER DISTRIBUTION MODULE ENGINE ROOM).

WIWA0356E

WITH FRONT AND REAR HEATED SEATS

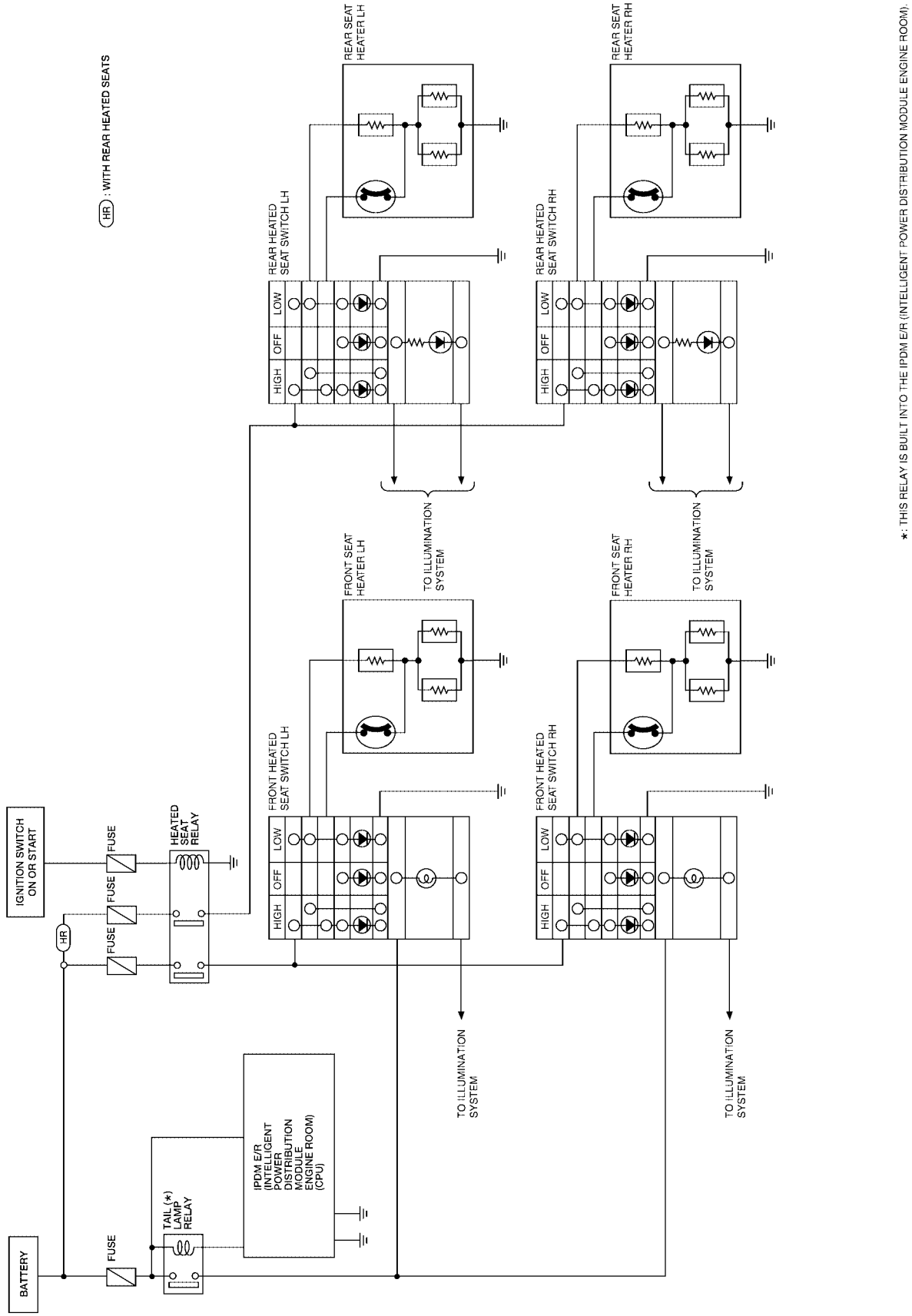

WIWA0357E

Wiring Diagram — HSEAT —

EIS003XJ

WITH FRONT LEFT AND RIGHT HEATED SEATS

SE-HSEAT-01

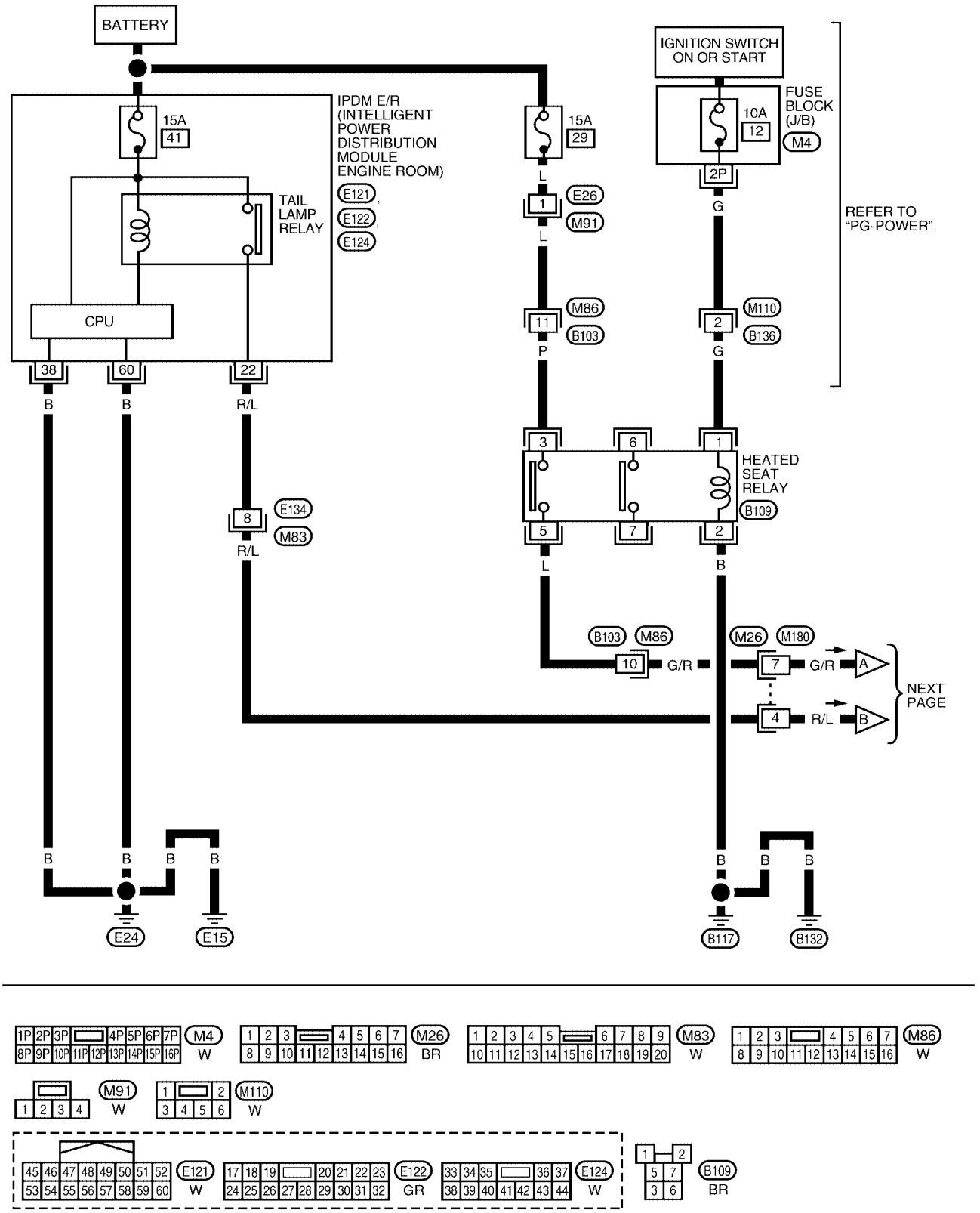

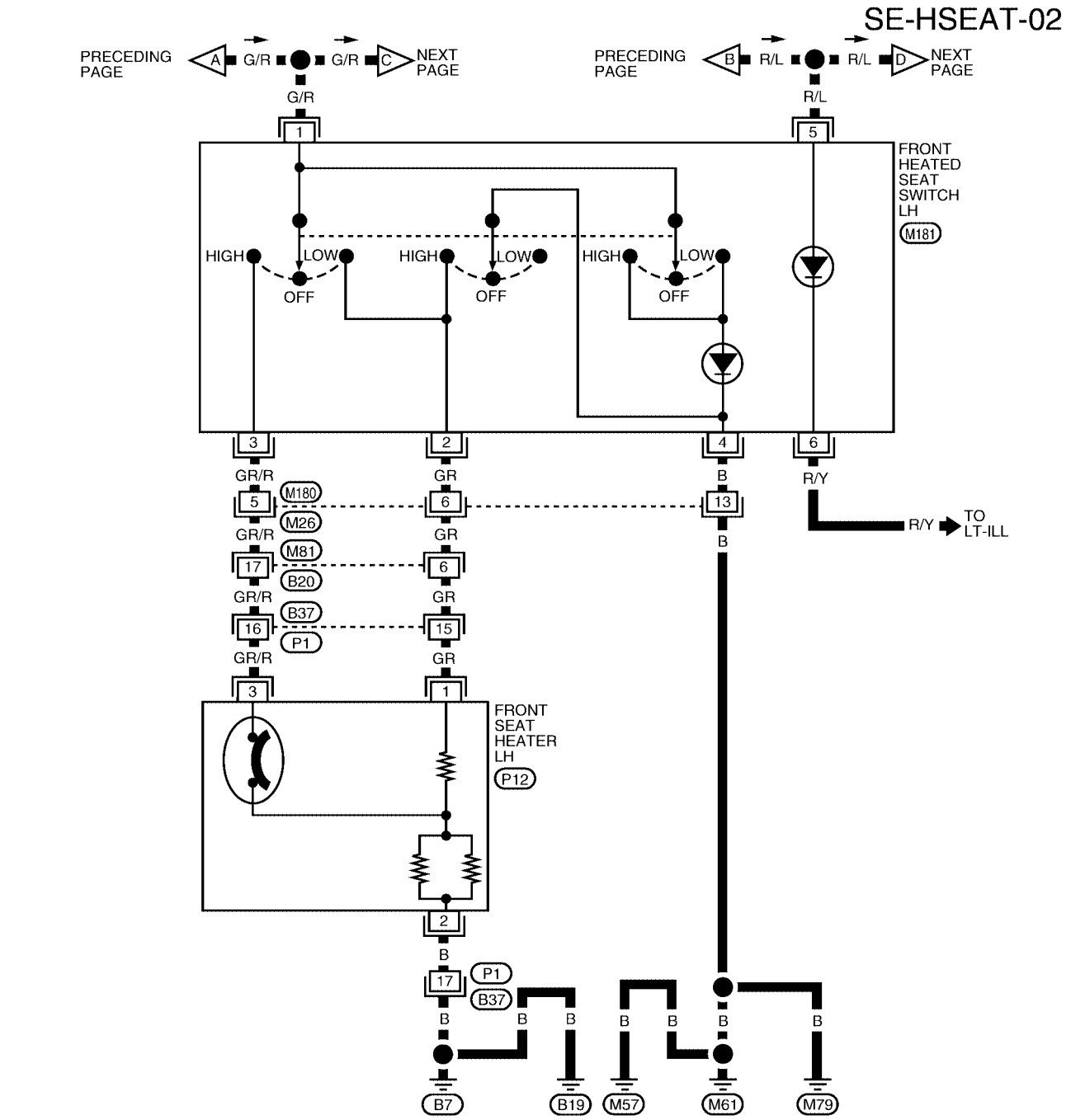

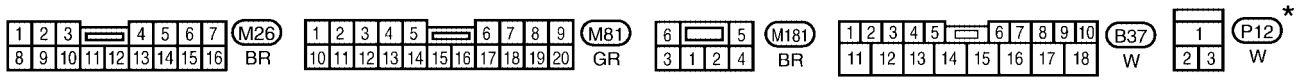

*: THIS CONNECTOR IS NOT SHOWN IN "HARNESS LAYOUT" OF PG SECTION.

WIWA0359E

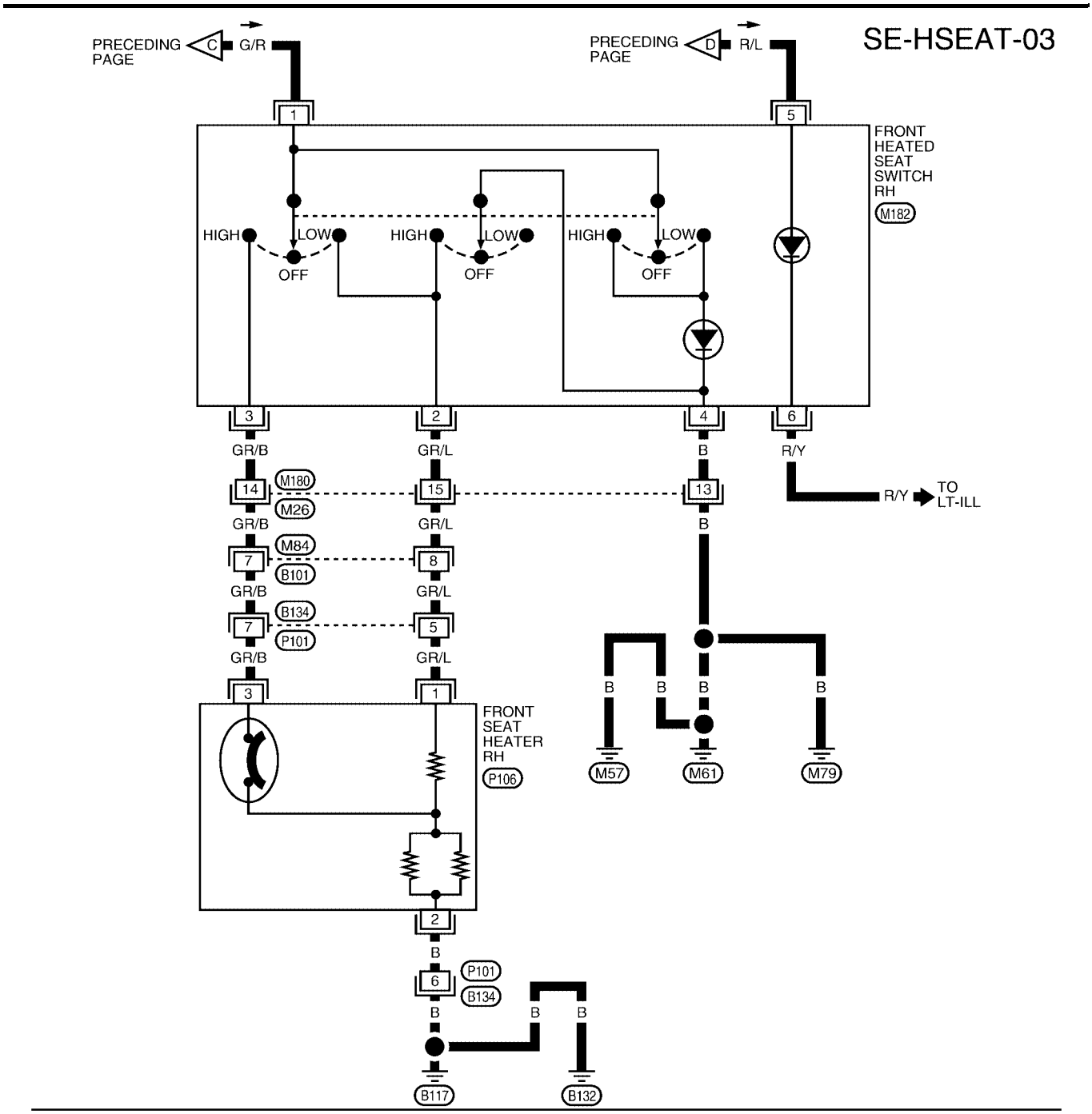

*: THIS CONNECTOR IS NOT SHOWN IN "HARNESS LAYOUT" OF PG SECTION.

WIWA0360E

WITH FRONT AND REAR HEATED SEATS

SE-HSEAT-04

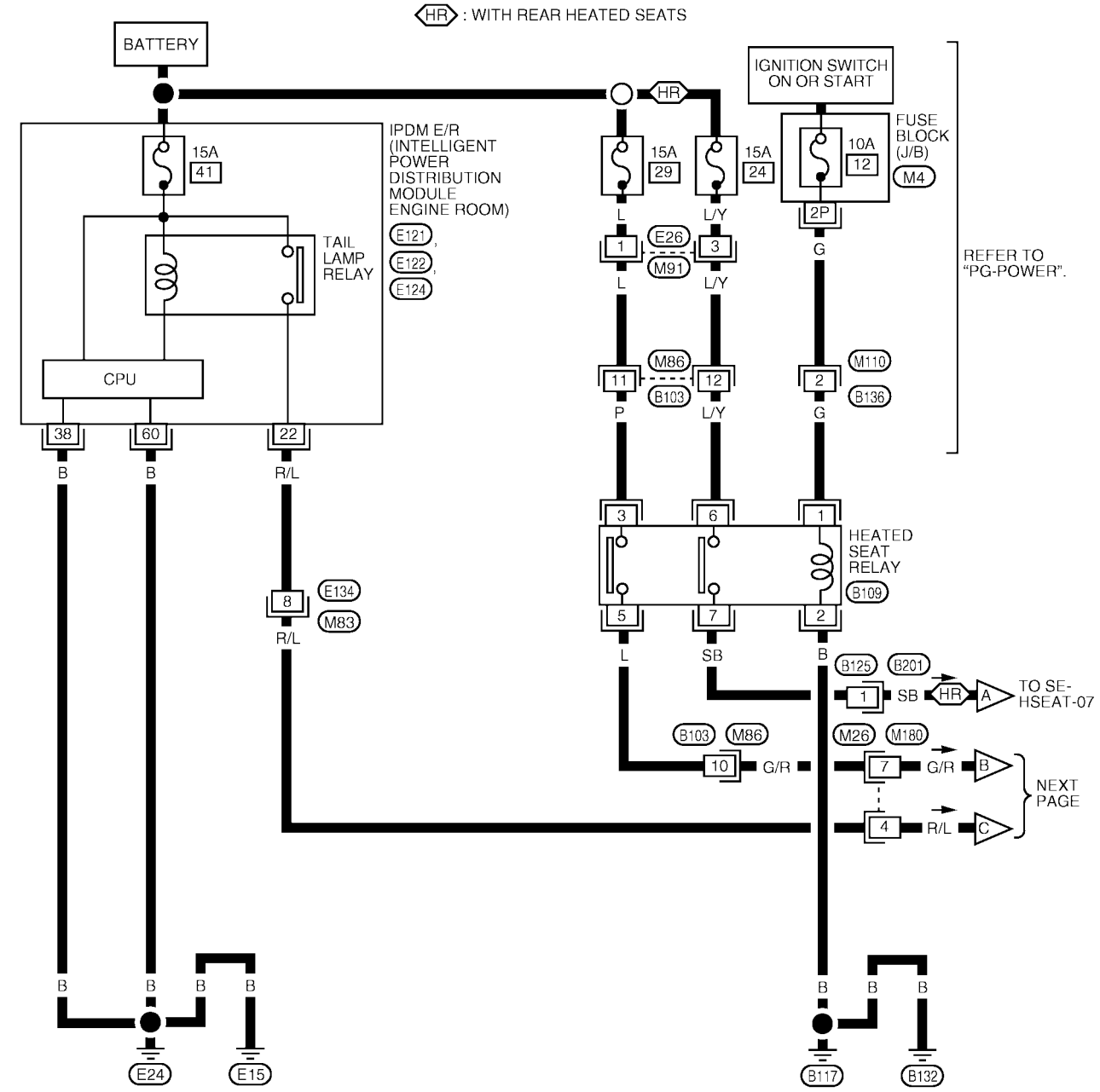

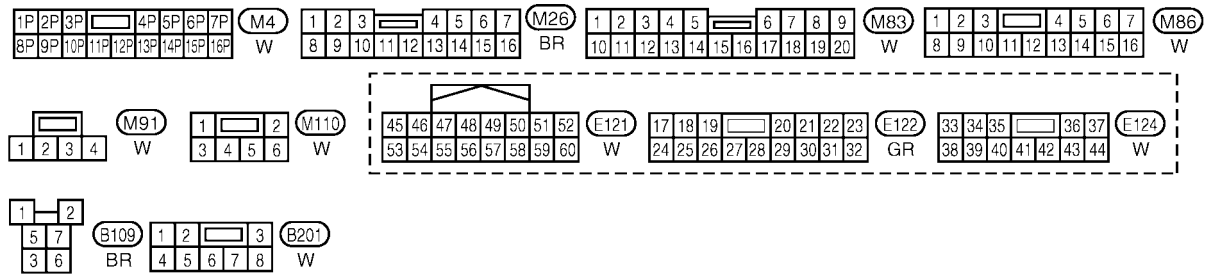

WIWA1161E

SE-HSEAT-05

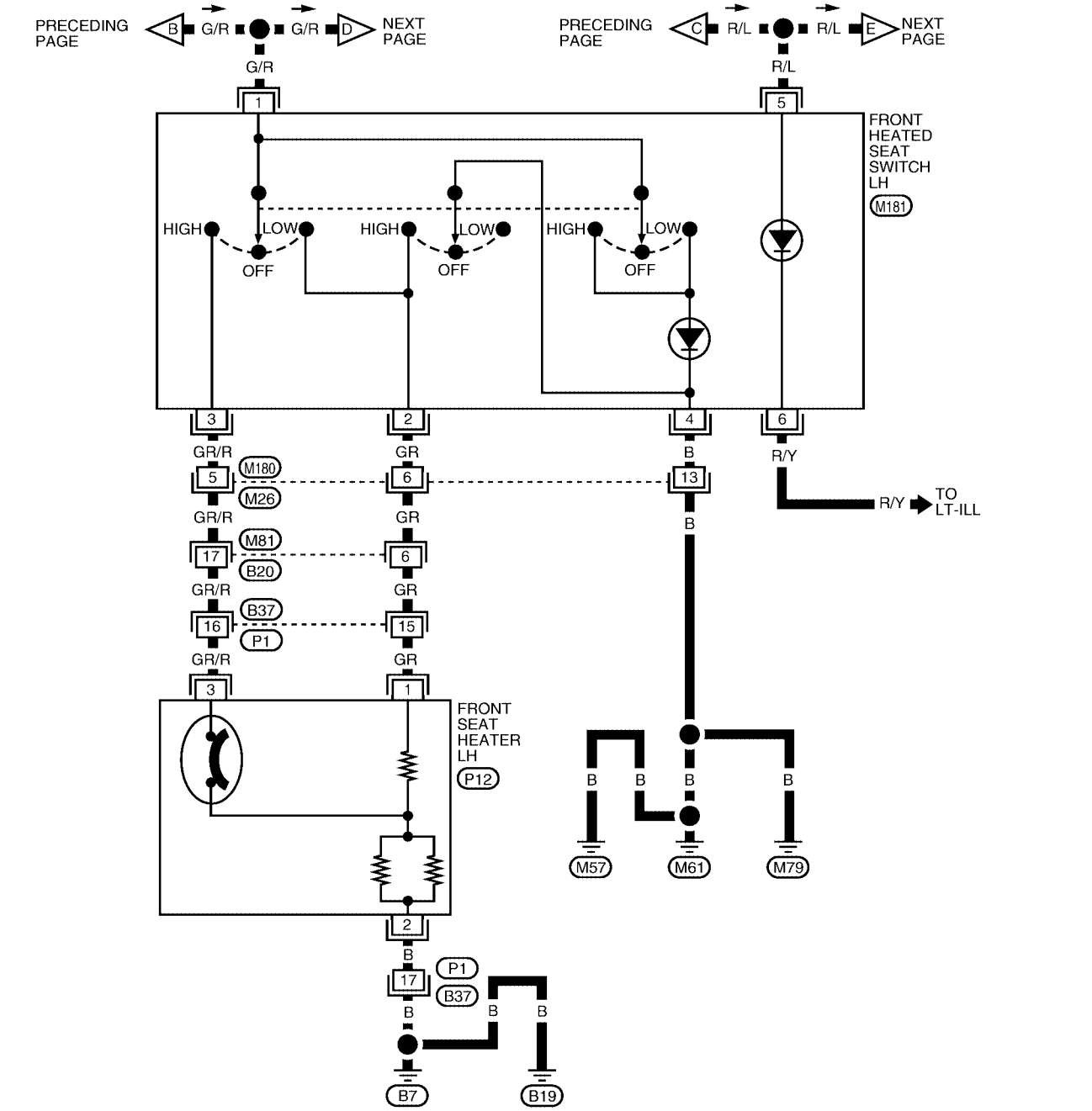

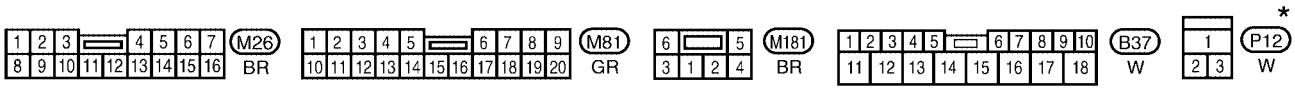

*: THIS CONNECTOR IS NOT SHOWN IN “HARNESS LAYOUT” OF PG SECTION.

WIWA0362E

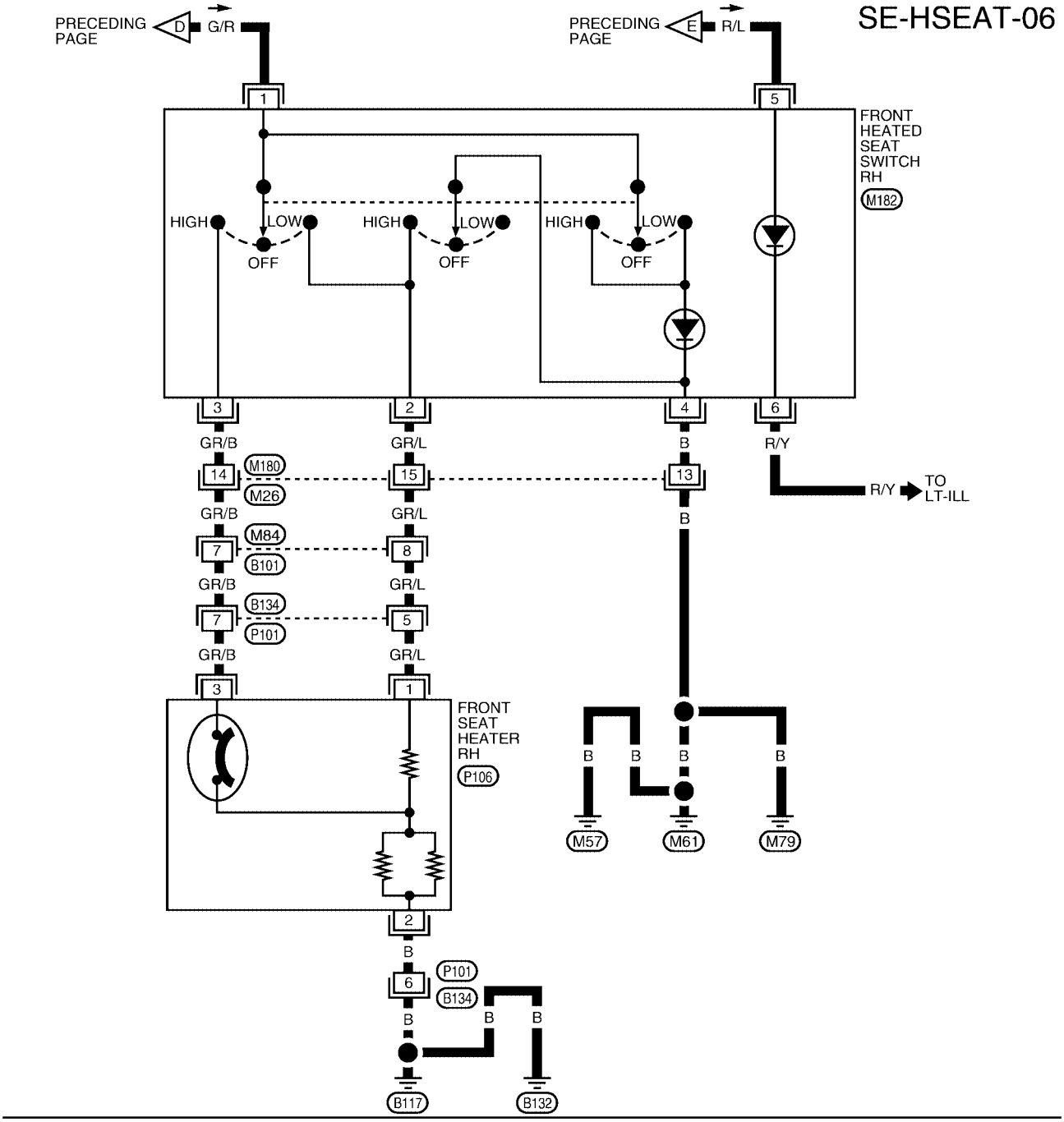

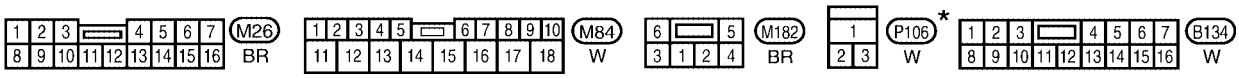

★: THIS CONNECTOR IS NOT SHOWN IN "HARNESS LAYOUT" OF PG SECTION.

WIWA0363E

SE-HSEAT-07

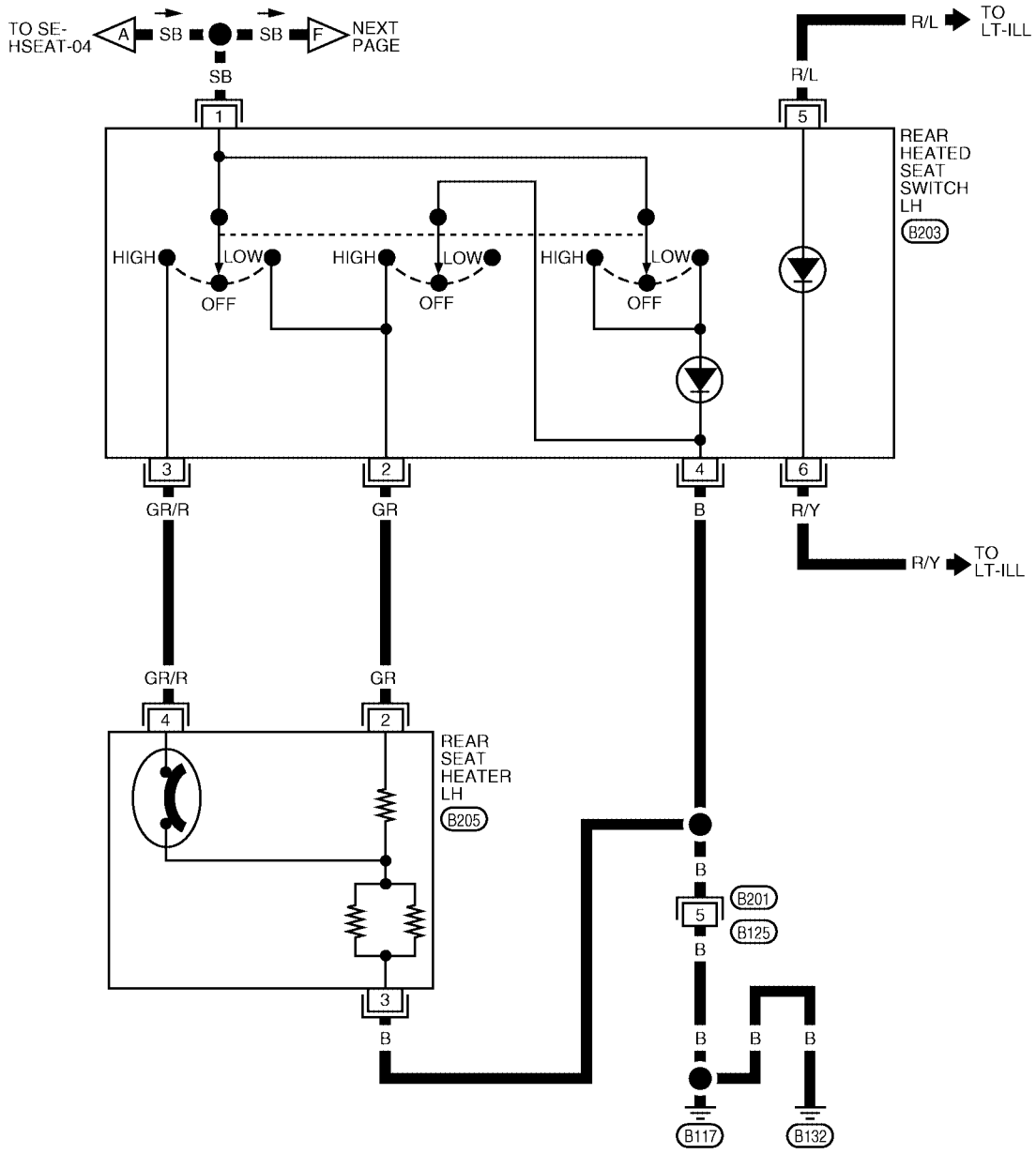

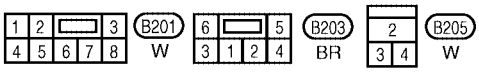

WIWA0477E

SE-HSEAT-08

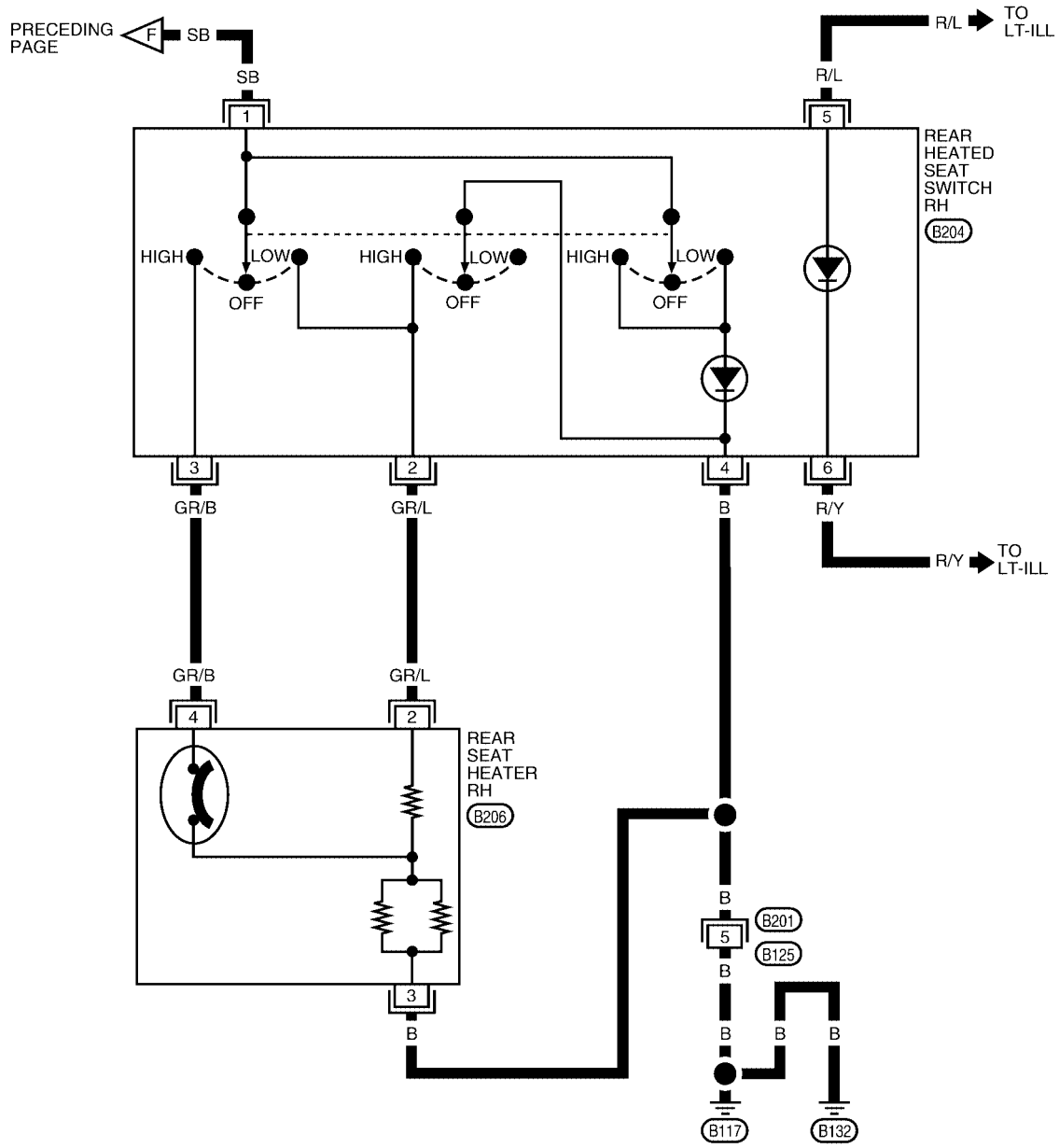

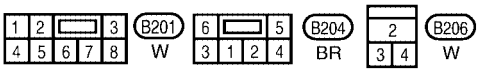

WIWA0388E

FRONT SEAT

PFP:87000

Removal and Installation

EIS003XK

Driver Seat

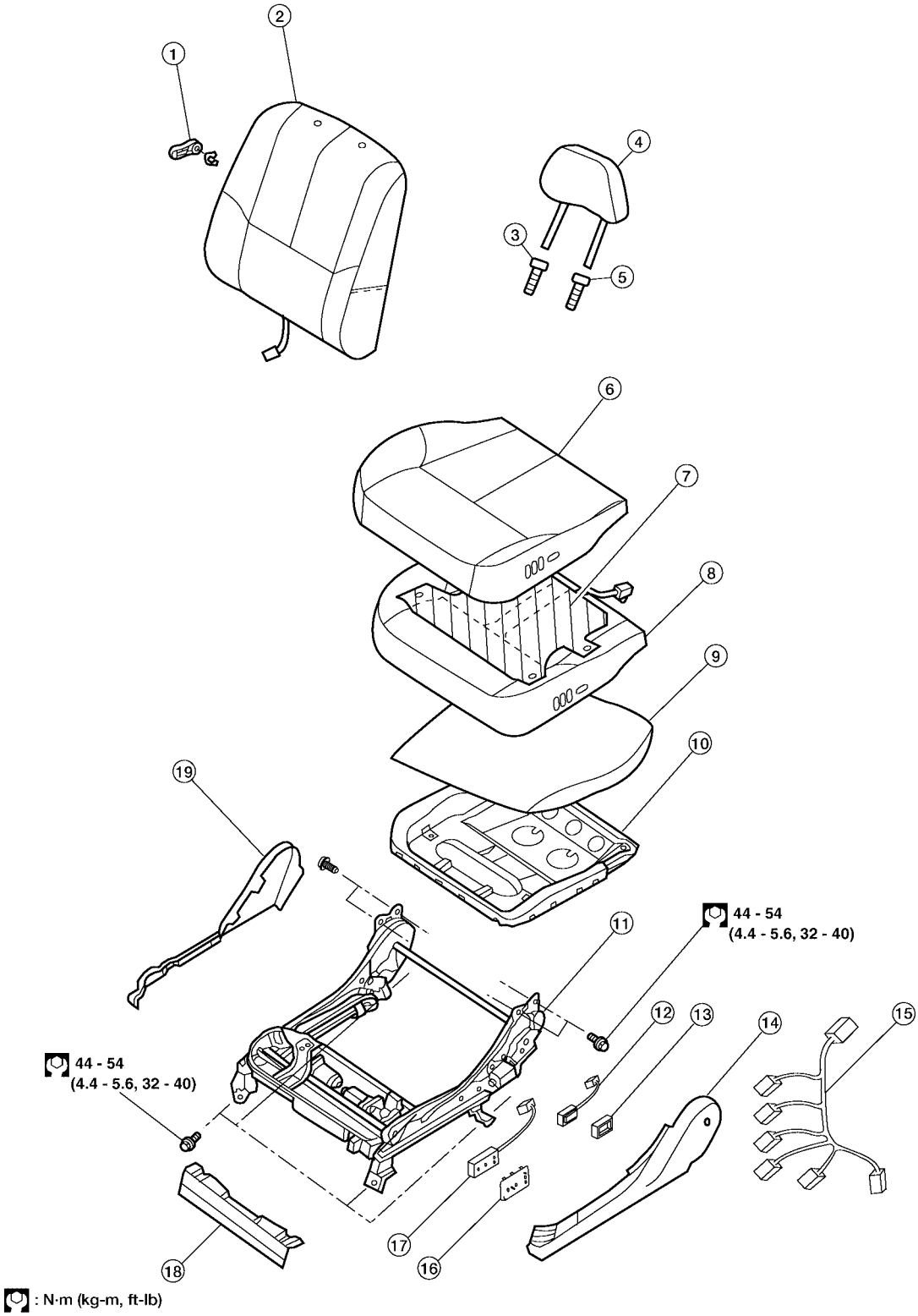

WIIA0382E

1. Seat lumbar unit lever
2. Seatback trim
3. Headrest holder (free)
4. Headrest
5. Headrest holder (locked)
6. Seat cushion trim
7. Seat cushion heater unit (if equipped)
8. Seat cushion pad
9. Silk film bag

10. Seat cushion frame
11. Driver seat frame assembly
12. Power lumbar support switch (optional)
13. Power lumbar support switch finisher
14. Seat cushion outer finisher
15. Driver power seat harness
16. Power seat switch finisher
17. Power seat switch
18. Seat cushion front finisher
19. Seat cushion inner finisher

.

Passenger Seat

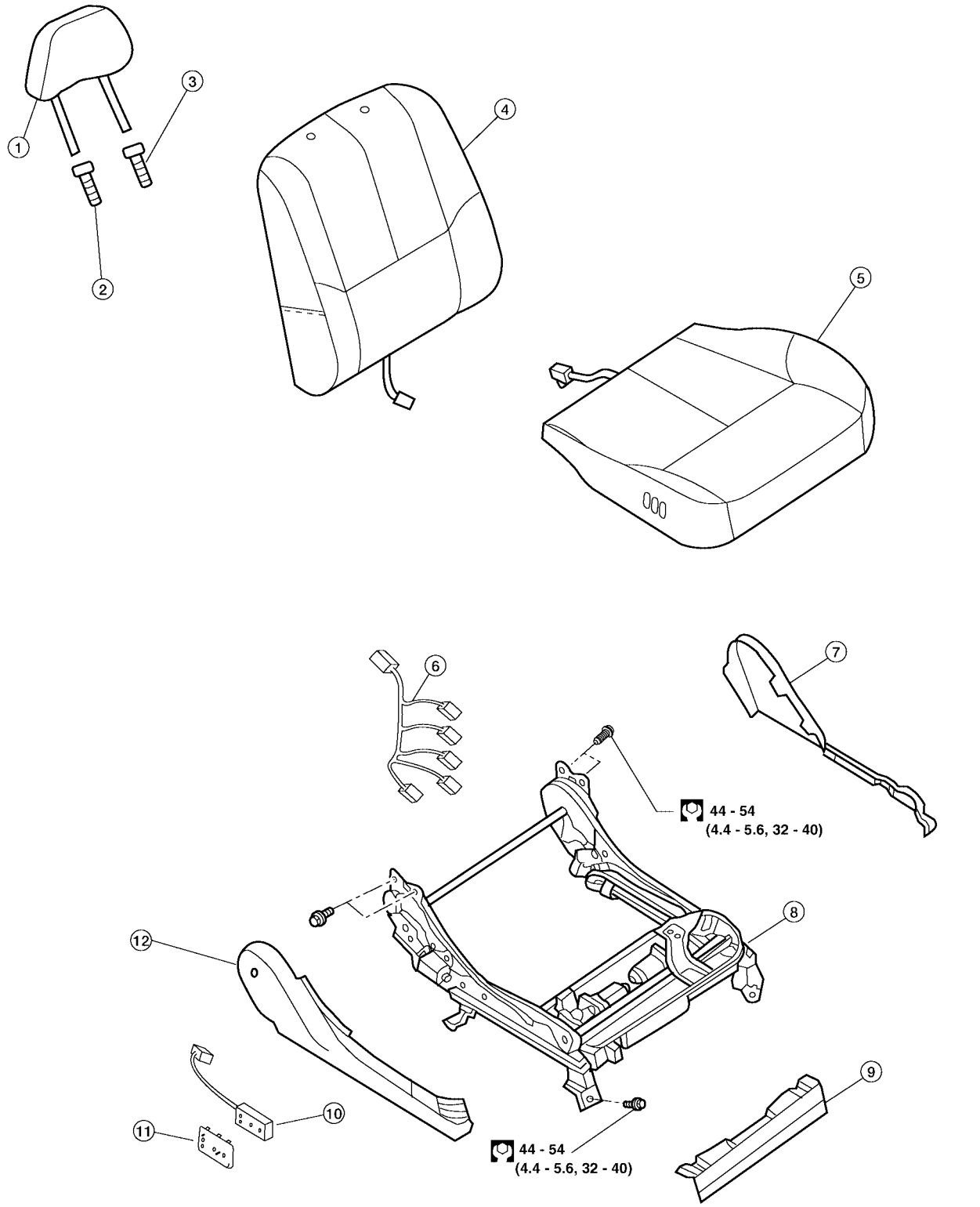

: N·m (kg-m, ft-lb)

WIIA0381E

1.	Headrest	2.	Headrest holder (free)	3.	Headrest holder (locked)
4.	Seatback assembly	5.	Seat cushion assembly	6.	Passenger power seat harness
7.	Seat cushion inner finisher	8.	Passenger seat power frame assembly	9.	Seat cushion front finisher
10.	Power seat switch	11.	Power seat switch finisher	12.	Seat cushion outer finisher

REMOVAL

When removing or installing the seat trim, handle it carefully to keep dirt out and avoid damage.

CAUTION:

- **Before removing the front seat, turn the ignition switch off, disconnect both battery cables and wait and least 3 minutes.**
- **When checking the power seat circuit for continuity using a circuit tester, do not confuse its connector with the side air bag module connector. Such an error may cause the air bag to deploy.**
- **Do not drop, tilt, or bump the side air bag module while installing the seat. Always handle it with care.**
- **After front side air bag module inflates, front seatback assembly must be replaced.**
- **Front passenger seat is equipped with an Occupant Classification System sensor and control module. Do not disassemble front passenger seat cushion assembly or remove the trim as this will affect the Occupant Classification System calibration.**
- **Always replace passenger seat cushion as an assembly.**

1. Slide the seat until the four bolts are visible and a tool can be inserted.

   NOTE:
   - When disassembling the driver seat after removal, set the front/rear cushion lifter to the top position.

2. Disconnect both battery cables and wait at least 3 minutes.
3. Remove the harness connector for the side air bag module.
4. Remove the bolts.
5. Remove the power seat harness connector and vehicle harness fixing clip from the vehicle.

INSTALLATION

- Installation is in the reverse order of removal.

  NOTE:
  Be sure to insert the rear end tab of the rear leg cover under the rail.

REMOVAL OF SEATBACK ASSEMBLY

1. Remove the seatback finisher from the back of the seatback.
   1. Bend both top corners inward (one at a time) to release the top hooks.
   2. Shift the seatback finisher to the Left and Right to release the middle hooks.
   3. Separate the trim clips from the seatback frame to remove the seatback finisher.

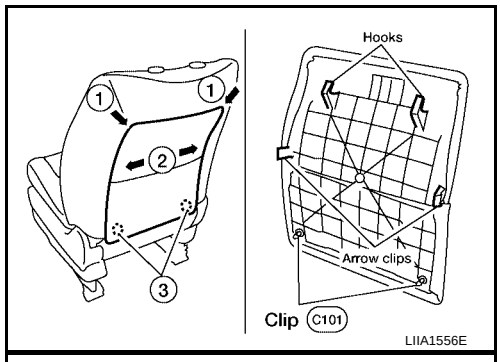

2. From the back of the seatback, press the headrest holder tabs at the base of the stay pipe to disengage. Then pull the headrest holder up to remove.

   NOTE:
   Before installing the headrest holder, check its orientation (front/rear and right/left).

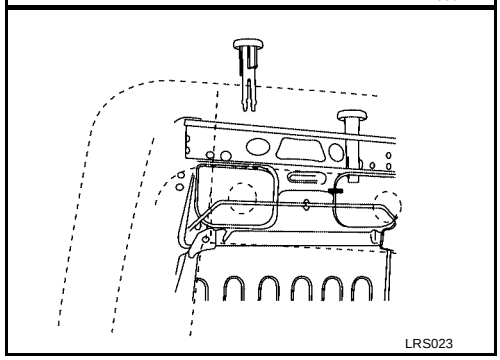

3. Pull out the harness connector for the side air bag from the seat cushion.
4. Remove the reclining device mounting bolts (2 for each side) on the seatback frame, and remove the seatback assembly.

   NOTE:
   When assembling the seatback frame, make sure that the reclining device is locked on both sides, and be sure to temporarily tighten the bolts, then finish tightening them.

INSTALLATION OF SEATBACK ASSEMBLY

- Installation is in the reverse order of removal.

SEAT CUSHION TRIM AND PAD (DRIVER) OR SEAT CUSHION ASSEMBLY (PASSENGER)

CAUTION:

- **Front passenger seat is equipped with an Occupant Classification System sensor and control module. Do not disassemble front passenger seat cushion assembly or remove the trim as this will affect the Occupant Classification System calibration.**
- **Always replace passenger seat cushion as an assembly.**
- **When removed, the passenger seat cushion must always be placed pan side UP to prevent damage.**
- **During installation, the wire harness clips must be reinstalled in the holes they were originally in. Do not add additional clips.**
- **The Occupant Classification System control module can only be replaced as part of the seat cushion assembly.**

NOTE:

If the vehicle has been involved in a collision, the seat must be inspected for damage. Refer to SRS-55, "COLLISION DIAGNOSIS" .

1. Remove the power seat switch knob.

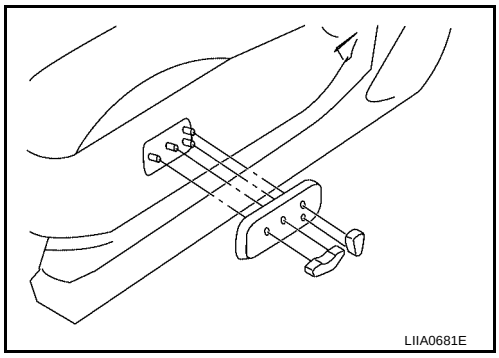

2. Remove the front seat cushion finisher (inner).

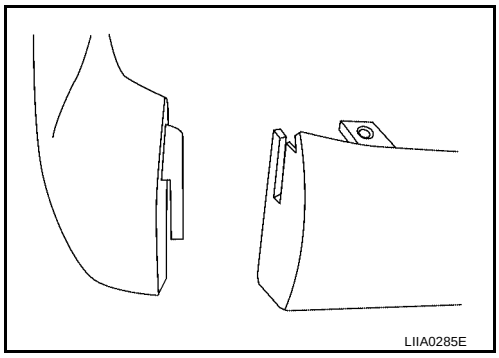

3. Remove the three power seat switch assembly screws (or lift knobs on manual seats).
4. Remove four bolts and seat cushion assembly.
5. Remove the retainer on the seat cushion frame, then remove the harness connector for the seat heater.
6. For driver seat only, after removing the seat cushion assembly, remove the hog rings to separate the trim cover from the pad and seat cushion heater unit.

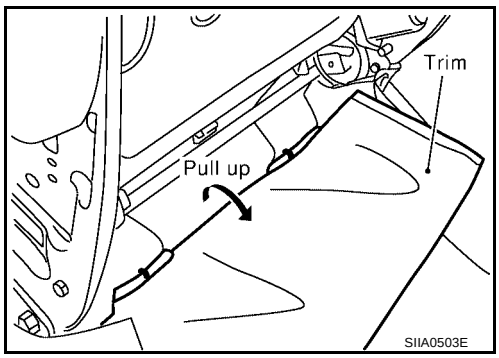

REAR SEAT

PFP:88300

Removal and Installation

EIS003XM

REMOVAL

1. Pull the lock at the front bottom of the seat cushion forward (1 for each side), and pull the seat cushion upward to release the wire from the plastic hook, then pull the seat cushion forward to remove.
2. Remove the RH and LH screws on the seatback.
3. Slide the seatback upward to pull off the wire from the wire from the vehicle-side hook, and remove the seatback.
4. After removing, remove the hog ring to separate the trim and pad.

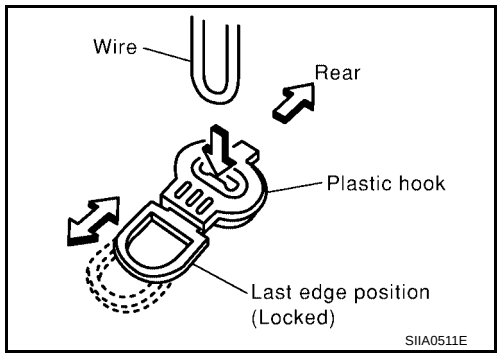

INSTALLATION

- Installation is in the reverse order of removal.

Disassembly and Assembly

EIS003XN

5-Passenger

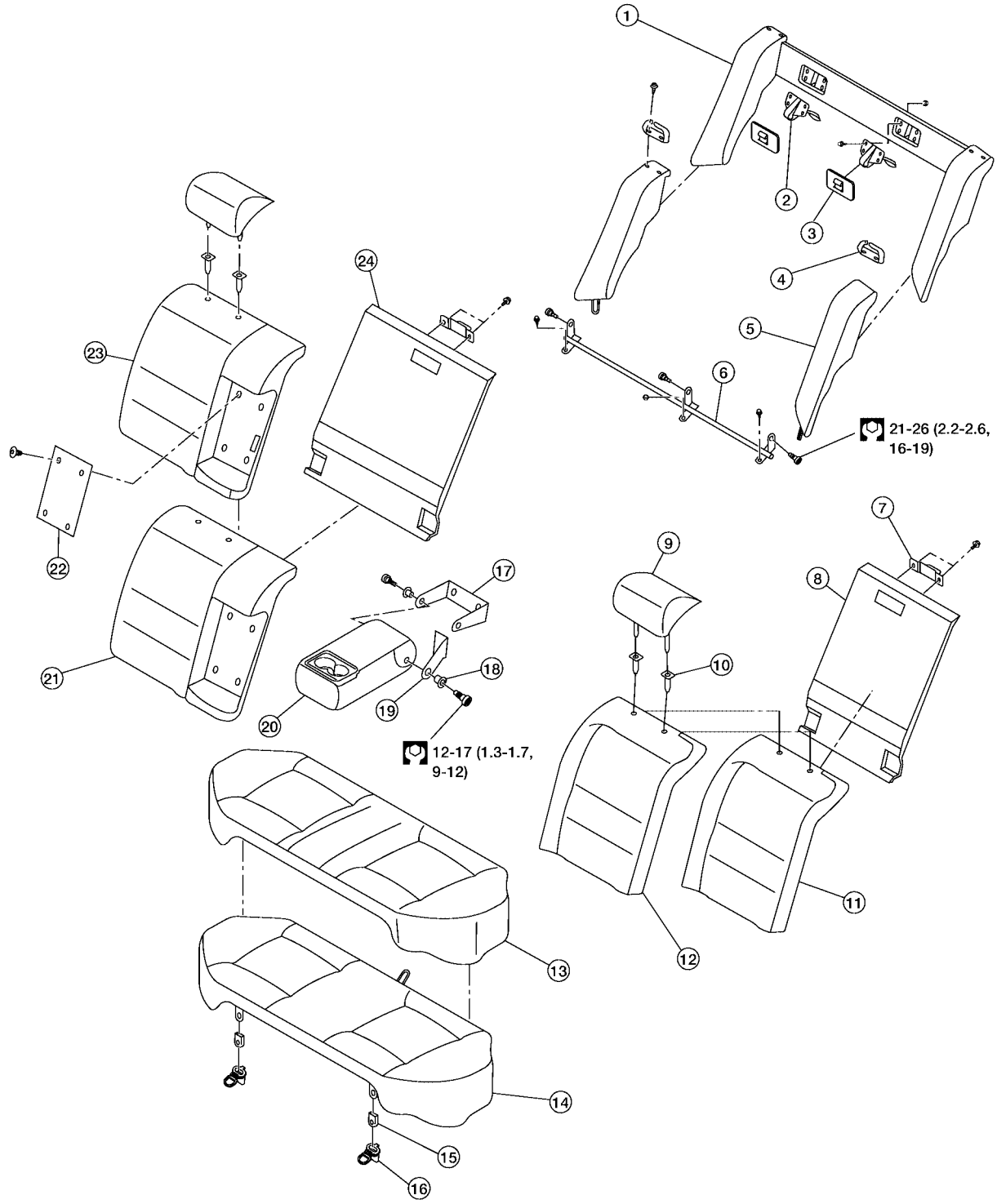

N·m (kg-m, ft-lb)

LIIA0286E

1. Rear seat side bolster assembly
2. Rear seatback latch assemblies
3. Rear seatback latch covers
4. Seat belt guides
5. Rear seatback side bolster trim covers
6. Rear seatback hinge assembly
7. Rear seatback latch strikers
8. Rear seatback board (40 percent portion)
9. Rear seatback headrest

10. Headrest guide	11. Rear seatback pad (40 percent portion)	12. Rear seatback trim cover (40 percent portion)
13. Rear seat cushion trim cover	14. Rear seat cushion pad and frame	15. Rear seat cushion hook insulator
16. Rear seat cushion hook	17. Armrest bracket	18. Bushing
19. Armrest bracket cover	20. Rear seat armrest assembly	21. Rear seatback pad (60 percent portion)
22. Armrest lid board assembly	23. Rear seatback trim cover (60 percent portion	24. Rear seatback board (60 percent portion)

4-Passenger

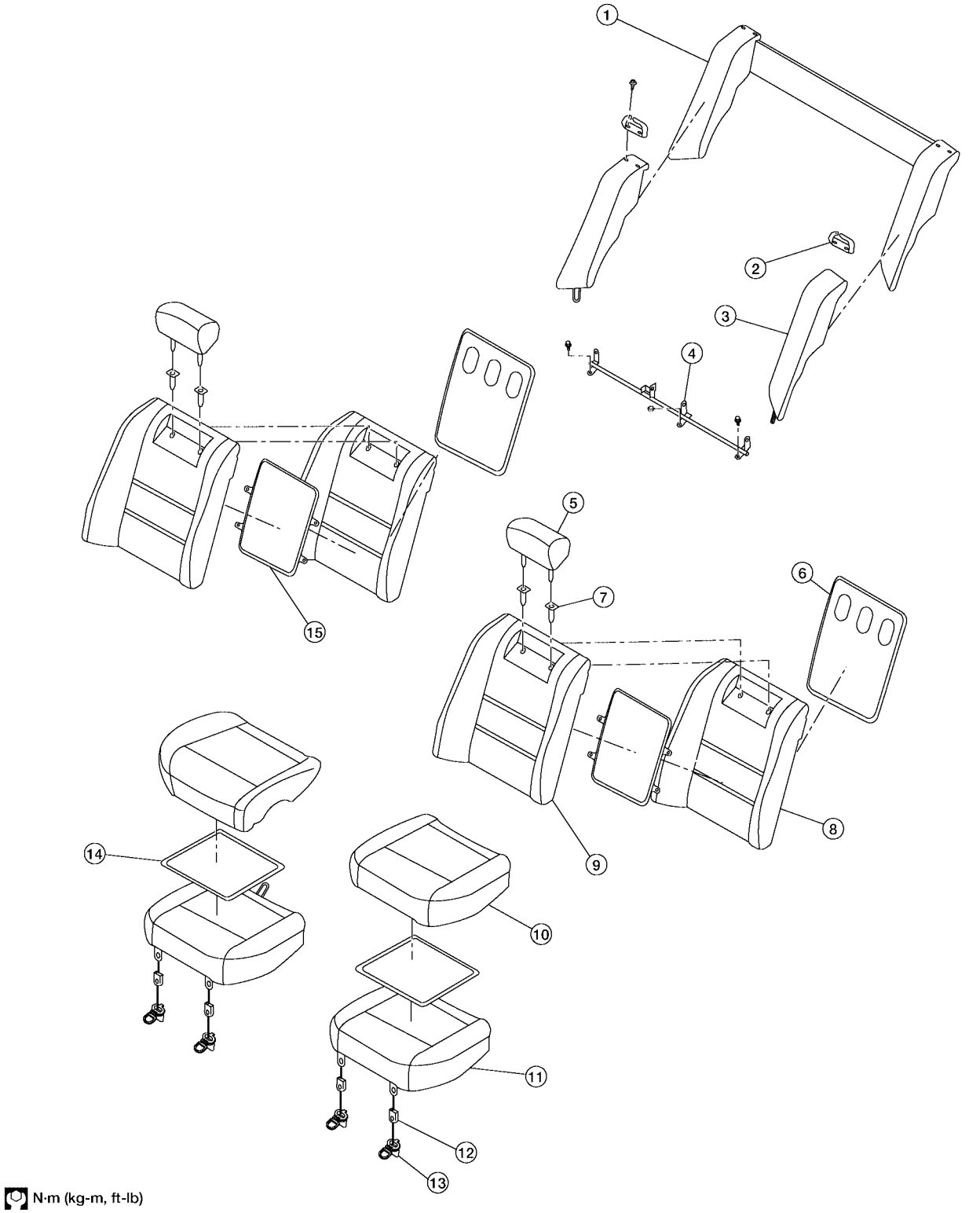

1. Rear seat side bolster assembly
2. Seat belt guide
3. Rear seatback side bolster trim covers
4. Rear seatback hinge assembly
5. Rear seatback headrest
6. Rear seatback board
7. Headrest guide
8. Rear seatback pad
9. Rear seatback trim cover
10. Rear seat cushion trim cover
11. Rear seat cushion pad and frame
12. Rear seat cushion hook insulator
13. Rear seat cushion hook
14. Rear seat cushion heater
15. Rear seat back heater