# SECTION PS
# POWER STEERING SYSTEM

## CONTENTS


**PRECAUTIONS ..... 2**
Precautions for Supplemental Restraint System (SRS) “AIR BAG” and “SEAT BELT PRE-TENSIONER” ..... 2
Precautions for Steering System ..... 2
**PREPARATION ..... 3**
Special Service Tools ..... 3
Commercial Service Tool ..... 5
**NOISE, VIBRATION, AND HARSHNESS(NVH) TROUBLESHOOTING ..... 6**
NVH Troubleshooting Chart ..... 6
**ON-VEHICLE SERVICE ..... 7**
Checking Steering Wheel Play ..... 7
Checking Neutral Position on Steering Wheel ..... 7
PRE-CHECKING ..... 7
CHECKING ..... 7
Front Wheel Turning Angle ..... 7
Checking Gear Housing Movement ..... 8
Checking and Adjusting Drive Belts ..... 8
Checking Fluid Level ..... 8
Checking Fluid Leakage ..... 8
Bleeding Hydraulic System ..... 8
Checking Steering Wheel Turning Force ..... 9
Checking Hydraulic System ..... 10
**STEERING WHEEL AND STEERING COLUMN ..... 11**
Components ..... 11
Removal and Installation ..... 11
STEERING WHEEL ..... 11
STEERING COLUMN ..... 12
Disassembly and Assembly ..... 13
Inspection ..... 14
TILT MECHANISM ..... 14
**POWER STEERING GEAR AND LINKAGE ..... 15**
Components ..... 15
Removal and Installation ..... 16
REMOVAL ..... 16
INSTALLATION ..... 17
Disassembly ..... 18
Inspection ..... 18
BOOT ..... 18
TIE-ROD OUTER AND INNER SOCKETS ..... 19
Assembly ..... 19
**POWER STEERING OIL PUMP ..... 21**
Removal and Installation ..... 21
REMOVAL ..... 21
INSTALLATION ..... 21
Disassembly and Assembly ..... 22
PRE-DISASSEMBLY INSPECTION ..... 22
DISASSEMBLY ..... 23
INSPECTION ..... 23
ASSEMBLY ..... 23
**HYDRAULIC LINE ..... 25**
Removal and Installation ..... 25
**SERVICE DATA AND SPECIFICATIONS (SDS) ..... 27**
General Specifications ..... 27
Steering Wheel ..... 27
Steering Column ..... 27
Steering Gear and Linkage ..... 27
Power Steering ..... 28

# PRECAUTIONS

PFP:00001

## Precautions for Supplemental Restraint System (SRS) “AIR BAG” and “SEAT BELT PRE-TENSIONER”

EGS000FE

The Supplemental Restraint System such as “AIR BAG” and “SEAT BELT PRE-TENSIONER”, used along with a front seat belt, helps to reduce the risk or severity of injury to the driver and front passenger for certain types of collision. Information necessary to service the system safely is included in the SRS and SB section of this Service Manual.

**WARNING:**

- **To avoid rendering the SRS inoperative, which could increase the risk of personal injury or death in the event of a collision which would result in air bag inflation, all maintenance must be performed by an authorized NISSAN/INFINITI dealer.**
- **Improper maintenance, including incorrect removal and installation of the SRS, can lead to personal injury caused by unintentional activation of the system. For removal of Spiral Cable and Air Bag Module, see the SRS section.**
- **Do not use electrical test equipment on any circuit related to the SRS unless instructed to in this Service Manual. SRS wiring harnesses can be identified by yellow and/or orange harnesses or harness connectors.**

## Precautions for Steering System

EGS000FF

- **Before disassembly, thoroughly clean the outside of the unit.**
- **Disassembly should be done in a clean work area. It is important to prevent the internal parts from becoming contaminated by dirt or other foreign matter.**
- **For easier and proper assembly, place disassembled parts in order on a parts rack.**
- **Use nylon cloths or paper towels to clean the parts; common shop rags can leave lint that might interfere with their operation.**
- **Before inspection or reassembly, carefully clean all parts with a general purpose, non-flammable solvent.**
- **Before assembly, apply a coat of recommended Genuine NISSAN PSF or equivalent to hydraulic parts. Petroleum jelly may be applied to O-rings and seals. Do not use any grease.**
- **Replace all gaskets, seals and O-rings. Avoid damaging O-rings, seals and gaskets during installation. Perform functional tests whenever designated.**

# PREPARATION

PFP:00002

## Special Service Tools

EGS000FG

The actual shapes of Kent-Moore tools may differ from those of special service tools illustrated here.

| Tool number<br>(Kent-Moore No.)<br>Tool name | | Description |
|---|---|---|
| KV48101100<br>(J26364)<br>Torque adapter | 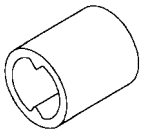 | Measuring pinion rotating torque |
| ST27180001<br>(J25726-B)<br>Steering wheel puller | 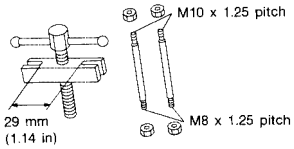 | Removing steering wheel |
| HT72520000<br>(J25730-B)<br>Ball joint remover | 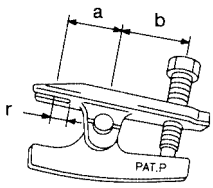 | Removing tie-rod and lower ball joint<br>**a: 33 mm (1.30 in)**<br>**b: 50 mm (1.97 in)**<br>**r: R11.5 mm (0.453 in)** |
| (J-24319-B)<br>Tie rod puller | 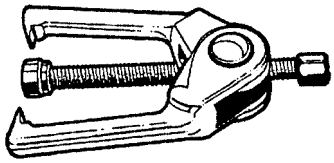 | Remove outer tie rod |
| KV48103500<br>(J26357 and J26357-10)<br>Pressure gauge | 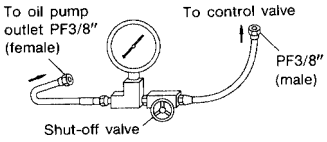 | Measuring oil pressure |
| KV48102500<br>(J33914)<br>Pressure gauge adapter | 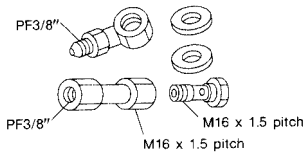 | Measuring oil pressure |

| Tool number<br>(Kent-Moore No.)<br>Tool name | | Description |
|---|---|---|
| ST3127S000<br>1 GG91030000<br>(See J25765-A)<br>Torque wrench<br>2 HT62940000<br>( — )<br>Socket adapter<br>3 HT62900000<br>( — )<br>Socket adapter | 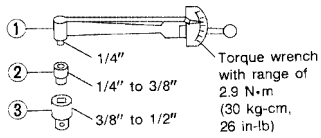 <br>S-NT541 | Measuring turning torque |
| (J44372)<br>5-60 Pound pull gauge | 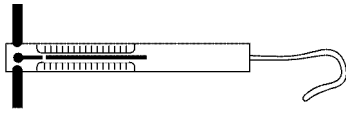 <br>WST052 | Measuring steering wheel turning force |
| (J44183-A)<br>20-100 Pound pull gauge | 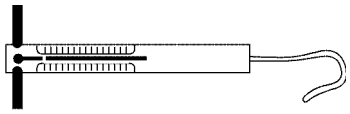 <br>WST052 | Measuring rack sliding force |
| ST35300000<br>( — )<br>Drift | 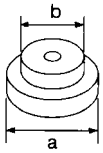 <br>NT073 | Installing power steering pump oil seal<br>**a: 49 mm (1.93 in) dia.**<br>**b: 41 mm (1.61 in) dia.** |
| (J-44615)<br>Air Bag Master Key Set | 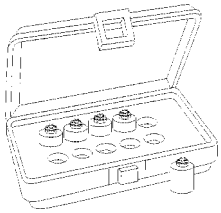 <br>LRS194 | Removing and installing accessory air bag bolts. |

## Commercial Service Tool

EGS000FH

| Tool number | Description |
|---|---|
| Power steering pump attachment 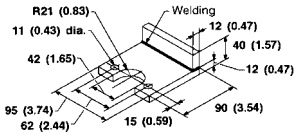  S-NT179 | Disassembling and assembling power steering pump<br>Unit: mm (in) |
| 10 mm Drift  LST027 | Installing power steering pump snap ring |

# NOISE, VIBRATION, AND HARSHNESS(NVH) TROUBLESHOOTING

PFP:00003

## NVH Troubleshooting Chart

EGS000FI

Use the chart below to help you find the cause of the symptom. If necessary, repair or replace these parts.

| Possible cause and SUSPECTED PARTS | | | Fluid level | Air in hydraulic system | Tie-rod ball joint swinging force | Tie-rod ball joint rotating torque | Tie-rod ball joint end play | Steering gear fluid leakage | Steering wheel play | Steering gear rack sliding force | Drive belt looseness | Improper steering wheel | Improper installation or looseness or tilt lock lever | Mounting rubber deterioration | Steering column deformation or damage | Improper installation or looseness of steering column | Steering linkage looseness | DRIVE SHAFT | AXLE | SUSPENSION | TIRES | ROAD WHEEL | BRAKES |
|---|---|---|---|---|---|---|---|---|---|---|---|---|---|---|---|---|---|---|---|---|---|---|---|
| Reference page | | | Refer to PS-8 | Refer to PS-8 | Refer to PS-19 | Refer to PS-19 | Refer to PS-19 | Refer to PS-8 | Refer to PS-7 | Refer to PS-9 | MA-16, "Checking Drive Belts", MA-23, "Checking Drive Belts" | Refer to PS-11 | Refer to PS-14 | Refer to PS-8 | Refer to PS-14 | Refer to PS-12 | Refer to PS-12 | FAX-4, "NVH Troubleshooting Chart" | FAX-4, "NVH Troubleshooting Chart" | FSU-4, "NVH Troubleshooting Chart" | WT-2, "NVH Troubleshooting Chart" | WT-2, "NVH Troubleshooting Chart" | BR-5, "NVH Troubleshooting Chart" |
| Symptom | STEERING | Noise | × | × | × | × | × | × | × | × | × | | | | | | | × | × | × | × | × | × |
| | | Shake | | | | | | | | | | × | × | × | | | | × | × | × | × | × | × |
| | | Vibration | | | | | | | | | | × | × | × | × | × | | × | × | × | × | | |
| | | Shimmy | | | | | | | | | | × | × | × | | | × | | × | × | × | × | × |
| | | Judder | | | | | | | | | | | | × | | | × | | × | × | × | × | × |

×: Applicable

# ON-VEHICLE SERVICE

PFP:00000

## Checking Steering Wheel Play

EGS000FJ

- With wheels in a straight-ahead position, check steering wheel play.

**Steering wheel play** **: 35 mm (1.38 in) or less**

- If it is not within specification, check the following for loose or worn components:
  - Steering gear assembly
  - Steering column
  - Front suspension and axle

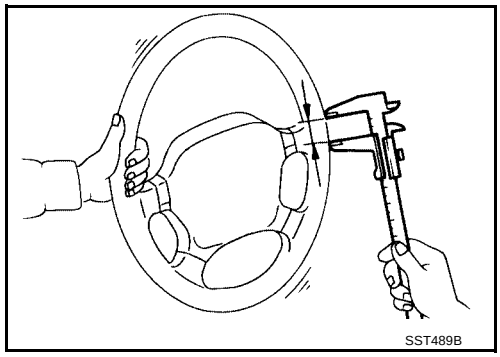


## Checking Neutral Position on Steering Wheel

EGS000FK

### PRE-CHECKING

- Make sure that wheel alignment is correct.

**Wheel alignment** **: Refer to FSU-6, "Front Wheel Alignment"**

- Verify that the steering gear is centered before removing the steering wheel.

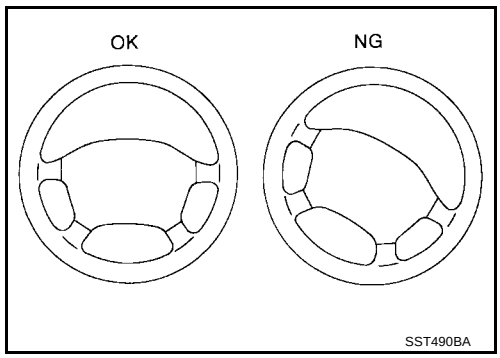


### CHECKING

1. Check that the steering wheel is in the neutral position when driving straight ahead.
2. If it is not in the neutral position, remove the steering wheel and reinstall it correctly.
3. If the neutral position is between two teeth, loosen tie-rod lock nuts. Turn the tie-rods by the same amount in opposite directions on both left and right sides.

## Front Wheel Turning Angle

EGS000FL

1. Rotate steering wheel all the way right and left; measure turning angle.

**Turning angle of full turns** **: Refer to FSU-6, "Front Wheel Alignment"**

2. If it is not within specification, check rack stroke.

**Rack stroke “S”** **: Refer to PS-27, "Steering Gear and Linkage"**

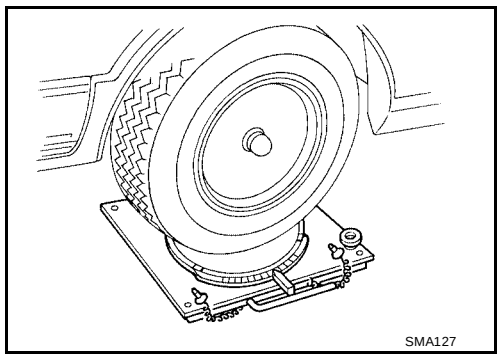

## Checking Gear Housing Movement

EGS000FM

1. Check the movement of steering gear housing during stationary steering on a dry paved surface.
   - Apply a force of 49 N (5 kg, 11 lb) to steering wheel to check the gear housing movement.
     Turn off ignition key while checking.

     **Movement of gear housing : ±2 mm (±0.08 in) or less**
2. If movement exceeds the limit, replace mount insulator after confirming proper installation of gear housing clamps.

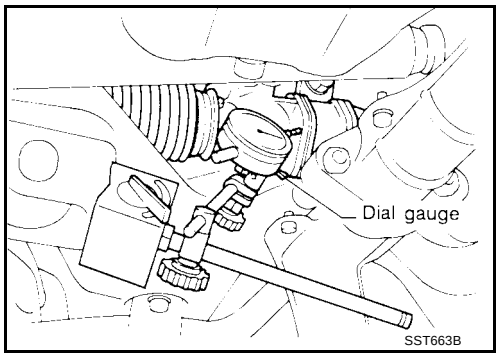


## Checking and Adjusting Drive Belts

EGS000FN

Refer to MA-16, "Checking Drive Belts" (QG18DE), MA-23, "Checking Drive Belts" (QR25DE).

## Checking Fluid Level

EGS000FO

Check fluid level, referring to the scale on reservoir tank.

- Use “HOT” range for fluid temperatures of 50 - 80°C (122 - 176°F).
- Use “COLD” range for fluid temperatures of 0 - 30°C (32 - 86°F).

**CAUTION:**

- **Do not overfill.**
- **Recommended fluid is Genuine NISSAN PSF or equivalent. Refer to MA-13, "Fluids and Lubricants" .**

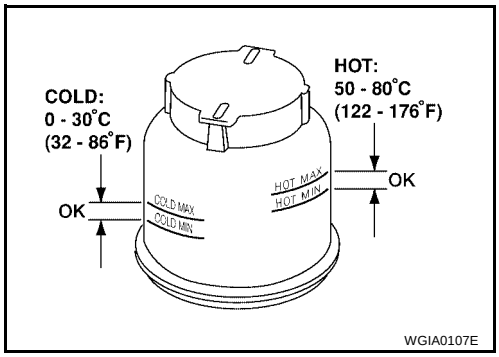


## Checking Fluid Leakage

EGS000FP

Check the lines for improper attachment and for leaks, cracks, damage, loose connections, chafing and deterioration.

1. Run engine between idle speed and 1,000 rpm.
   - Make sure temperature of fluid in oil tank rises to 60 - 80°C (140 - 176°F).
2. Turn steering wheel right-to-left several times.
3. Hold steering wheel at each “lock” position for five seconds and carefully check for fluid leakage.

   **CAUTION:**
   **Do not hold the steering wheel in a locked position for more than 15 seconds.**

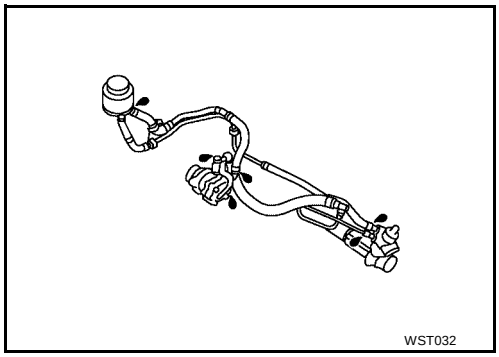


4. If fluid leakage at connectors is noticed, shut off engine, then loosen and retighten flare nut.

   **CAUTION:**
   **Do not overtighten connector as this can damage O-ring, washer and connector.**
5. If fluid leakage from power steering pump is noticed, check power steering pump. Refer to PS-22, "PRE-DISASSEMBLY INSPECTION" .
6. Check dust boots for accumulation of power steering fluid.

## Bleeding Hydraulic System

EGS000FQ

1. Raise front end of vehicle until wheels are clear of the ground.
2. Add fluid into reservoir tank to specified level. Then quickly turn steering wheel fully to right and left and lightly touch steering stoppers.
3. Repeat steering wheel operation until fluid level no longer decreases.
4. Start engine and repeat step 2 above.
   - If any of the following occurs, bleed air again:

- Air bubbles in reservoir tank
- Clicking noise in oil pump
- Excessive buzzing in oil pump

Fluid noise may occur in the valve or oil pump. This is common when the vehicle is stationary or while turning the steering wheel slowly. This does not affect the performance or durability of the system.

## Checking Steering Wheel Turning Force

EGS000FR

1. Park vehicle on a level, dry surface and set parking brake.
2. Start engine.
3. Bring power steering fluid up to adequate operating temperature. [Make sure temperature of fluid is approximately 60 - 80°C (140 - 176°F).]
4. Check steering wheel turning force using Tool when steering wheel has been turned 360° from the neutral position.

   **NOTE:**
   Tires need to be inflated to normal pressure.

   **Tool number : J-44372-A**

   **Steering wheel turning force : 39 N (4 kg, 9 lb) or less**

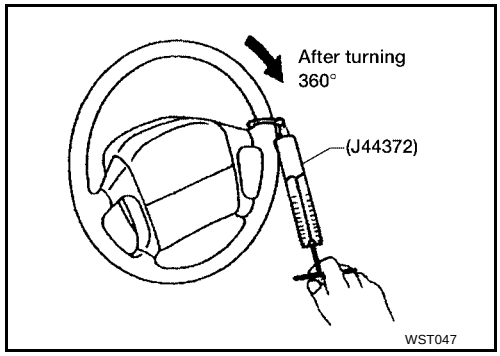


5. If steering wheel turning force is out of specification, check rack sliding force as follows.

a. Disconnect steering column lower joint and knuckle arms from the gear.

b. Start and run engine at idle to make sure steering fluid has reached normal operating temperature.

c. Pull tie-rod using Tool slowly to move it from neutral position to ±11.5 mm (±0.453 in) at speed of 3.5 mm (0.138 in)/s. Check that rack sliding force is within specification.

   **Tool number : J-44183-A**

   **Average rack sliding force (QG18DE models) : 140 - 330 N (14.3 - 33.6 kg, 31.5 - 74.1 lb)**

   **Average rack sliding force (QR25DE models) : 160 - 350 N (16.3 - 35.7 kg, 36.0 - 78.7 lb)**

   **Maximum force deviation : 98 N (10 kg, 22 lb)**

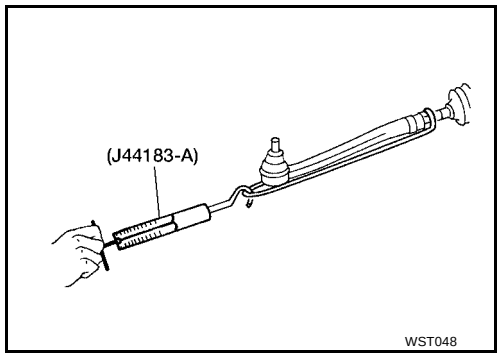


d. Check sliding force outside the above range at rack speed of 40 mm (1.75 in)/s.

   **Maximum rack sliding force : Not more than 294 N (30 kg, 66 lb)**

   **Maximum force deviation : 147 N (15 kg, 33 lb)**

6. If rack sliding force is not within specification, overhaul steering gear assembly.
7. If rack sliding force is OK, inspect steering column. Refer to PS-14, "Inspection" .

## Checking Hydraulic System

EGS000FS

Before starting, check belt tension, driving pulley and tire pressure.

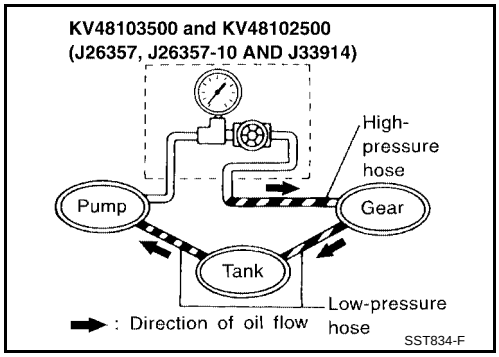


1. Set Tool. Open shut-off valve. Then bleed air. Refer to PS-8, "Bleeding Hydraulic System" .

   **Tool numbers : KV48103500 (J-26357 and J-26357-10)**
   **: KV48102500 (J-33914)**

2. Run engine at idle speed or 1,000 rpm.

   **NOTE:**
   Make sure temperature of fluid in tank rises to 60 - 80°C (140 - 176°F).

   **WARNING:**
   **Warm up engine with shut-off valve fully opened. If engine is started with shut-off valve closed, fluid pressure in oil pump increases to maximum. This will raise oil temperature abnormally.**

3. Check pressure with steering wheel fully turned to left and right positions with engine idling at 1,000 rpm.

   **CAUTION:**
   **Do not hold the steering wheel in a locked position for more than 15 seconds.**

   **Oil pump maximum standard pressure**

   **QG18DE : 7,649 - 8,238 kPa (78 - 84 kg/cm$^2$ , 1,109 - 1,194 psi)**

   **QR25DE : 8,000 - 8,800 kPa (82 - 90 kg/cm$^2$ , 1,160 - 1,276 psi)**

   - If pressure reaches maximum operating pressure, system is OK.
   - If pressure increases above maximum operating pressure, check power steering pump flow control valve. Refer to PS-22, "Disassembly and Assembly" .

4. If power steering pressure is below the maximum operating pressure, slowly close shut-off valve and check pressure again.

   **CAUTION:**
   **Do not close shut-off valve for more than 15 seconds.**

   - If pressure increases to maximum operating pressure, gear is damaged. Refer to PS-16, "Removal and Installation" .
   - If pressure remains below maximum operating pressure, pump is damaged. Refer to PS-23, "DISASSEMBLY" .

5. After checking hydraulic system, remove Tool and add fluid as necessary. Then completely bleed air out of system. Refer to PS-8, "Bleeding Hydraulic System" .

# STEERING WHEEL AND STEERING COLUMN

PFP:48430

## Components

EGS000FT

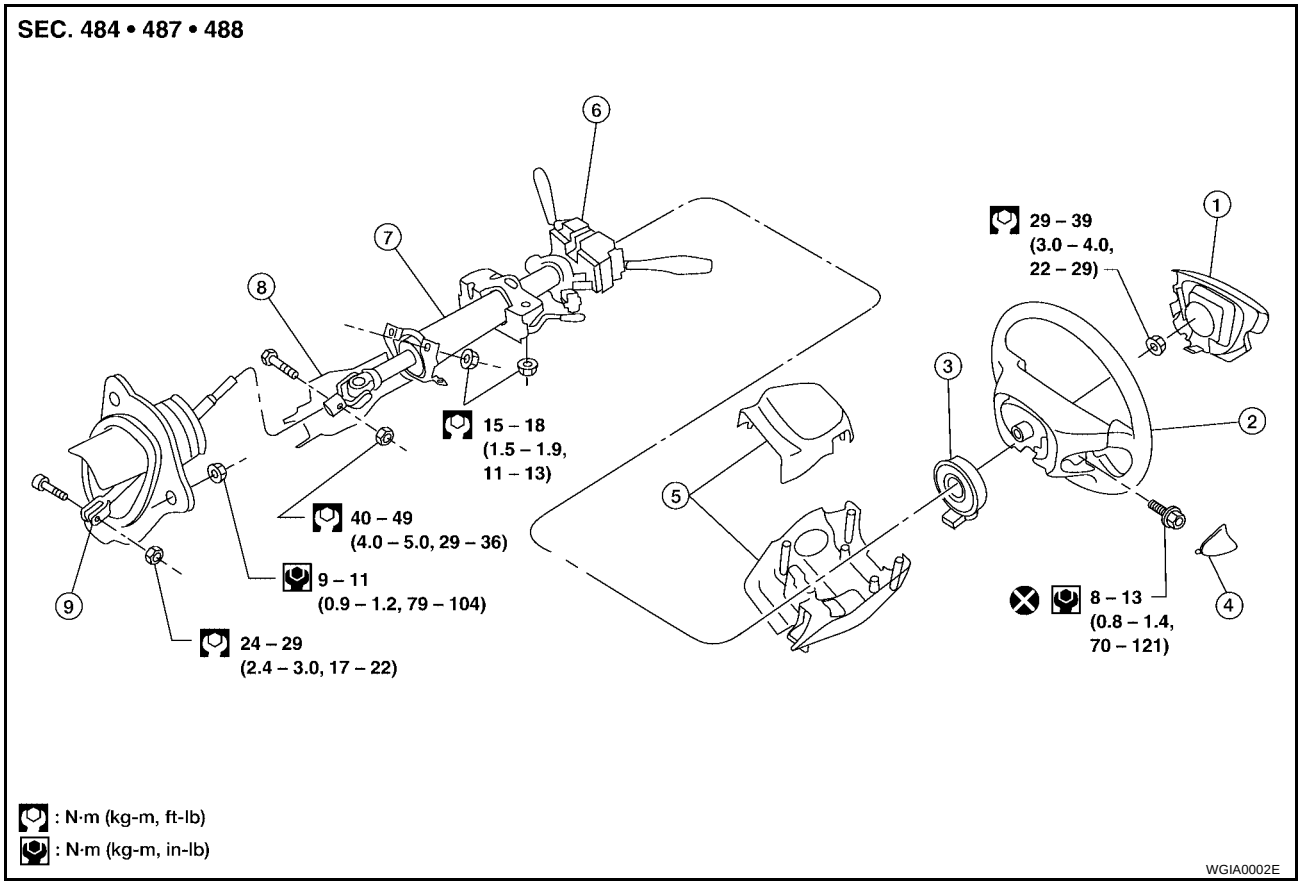


| | | | | | |
|---|---|---|---|---|---|
| 1. | Air bag module | 2. | Steering wheel | 3. | Spiral cable |
| 4. | Side lid LH | 5. | Column cover | 6. | Combination switch |
| 7. | Steering column assembly | 8. | Steering column lower cover | 9. | Lower joint |

**CAUTION:**

- **The rotation of the spiral cable (SRS "Air bag" component part) is limited. If the steering gear must be removed, set the front wheels in the straight-ahead direction. Do not rotate the steering column while the steering gear is removed.**
- **Remove the steering wheel before removing the steering lower joint to avoid damaging the SRS spiral cable.**

## Removal and Installation

EGS000FU

### STEERING WHEEL

1. Remove air bag module. Refer to SRS-40, "Removal and Installation" .
2. Remove steering wheel mounting nut.
3. Remove steering wheel using Tool.

   **Tool number : ST27180001 (J25726-B)**

4. Installation is in the reverse order of removal.

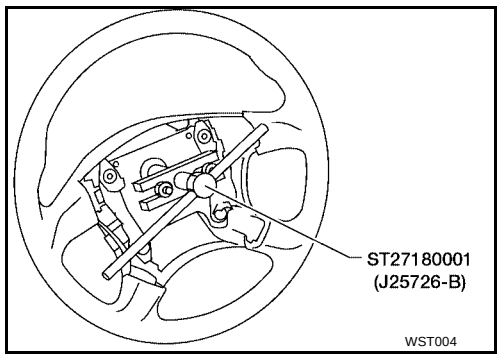

## STEERING COLUMN

### Removal

**CAUTION:**

- **The rotation of the spiral cable (SRS “Air Bag” component part) is limited. If the steering gear must be removed, set the front wheels in the straight-ahead direction. Do not rotate the steering column while the steering gear is removed.**
- **Remove the steering wheel before removing the steering lower joint to avoid damaging the SRS spiral cable.**

1. Disconnect the battery negative terminal.
2. Remove the steering wheel. Refer to PS-11, "STEERING WHEEL" .
3. Removal spiral cable. Refer to SRS-42, "Removal and Installation" .
4. Disconnect data link connector.
5. Remove lower instrument panel and lower reinforcement panel. Refer to IP-10, "Removal and Installation" .
6. Remove the column covers.
7. Disconnect electrical connectors.
8. Remove three screws securing combination switch and remove combination switch.
9. Remove key interlock cable (A/T models).
10. Remove the hole cover, then remove bolt from lower joint.
11. Remove the steering column lower cover.
12. Remove four nuts securing steering column and remove steering column.

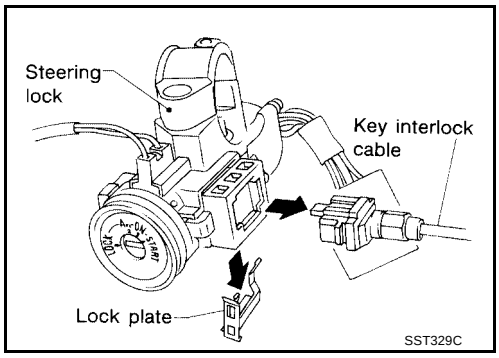


### Installation

1. Installation is the reverse order of removal.
   - When installing steering column, finger tighten all lower bracket and clamp retaining bolts; then tighten them securely. Do not apply undue stress to steering column.
   - When attaching coupling joint, be sure tightening bolt faces cutout portion.

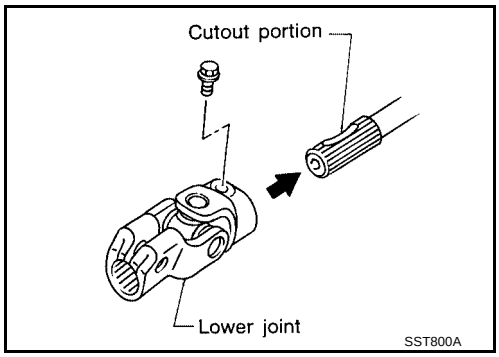


   - Align slit of lower joint with projection on dust cover. Insert joint until surface A contacts surface B.

   **CAUTION:**
   **After installation, turn steering wheel to make sure it moves smoothly. Ensure the number of turns are the same from the straight forward position to left and right locks. Be sure that the steering wheel is in a neutral position when driving straight ahead.**

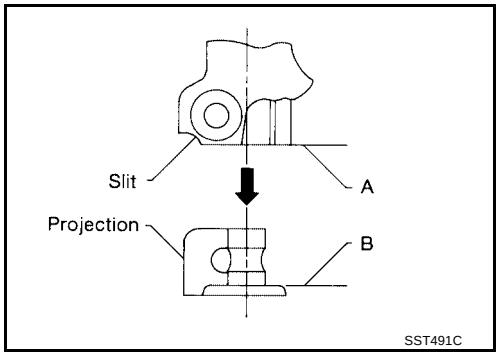

## Disassembly and Assembly

EGS000FV

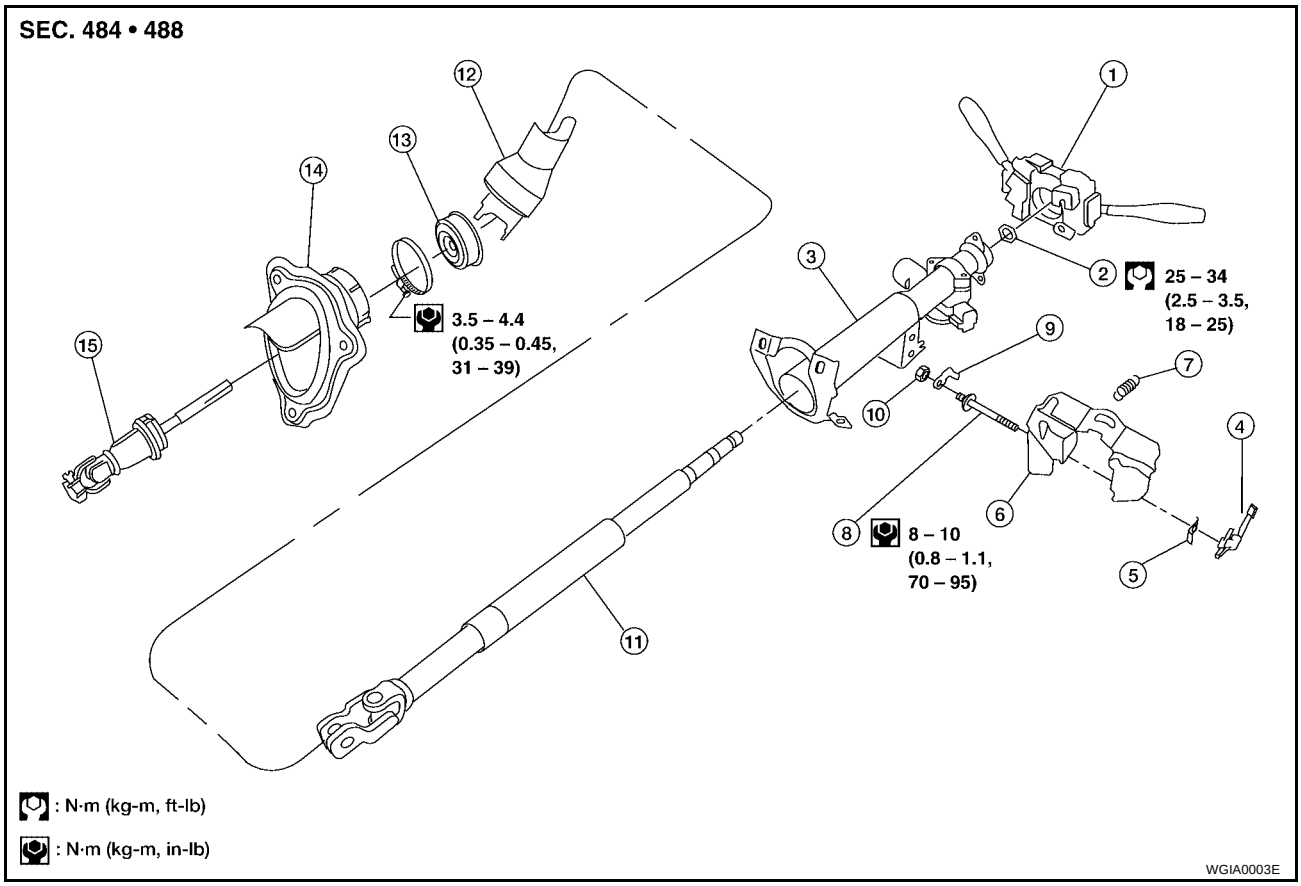


| | | | | | |
|---|---|---|---|---|---|
| 1. | Combination switch | 2. | Lock nut | 3. | Jacket tube assembly |
| 4. | Tilt lever | 5. | Tilt lever stopper | 6. | Steering column mounting bracket |
| 7. | Spring | 8. | Adjust bolt | 9. | Adjust bolt stopper |
| 10. | Nut | 11. | Column shaft assembly | 12. | Steering column lower cover |
| 13. | Hole cover seal | 14. | Hole cover | 15. | Lower joint |

- When disassembling and assembling, unlock steering lock with key.
- Install lock nut on steering column shaft and tighten the nut.

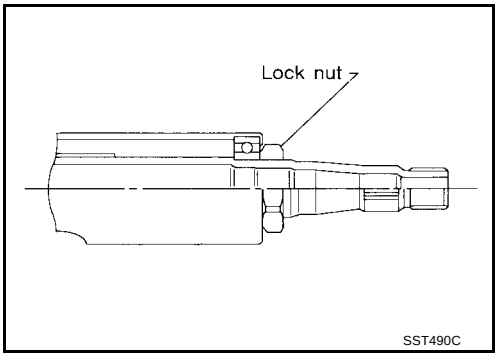


- Steering lock:
  - Break self-shear type screws using a drill or other appropriate tool.

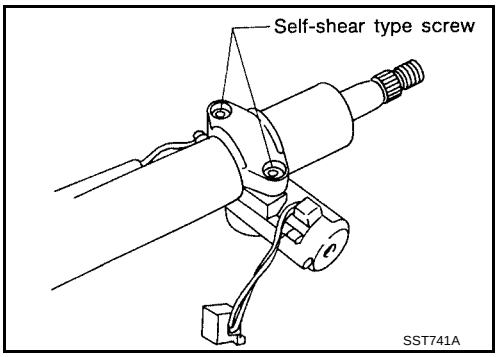

- Install new self-shear type screws, then tighten until screw heads break off.

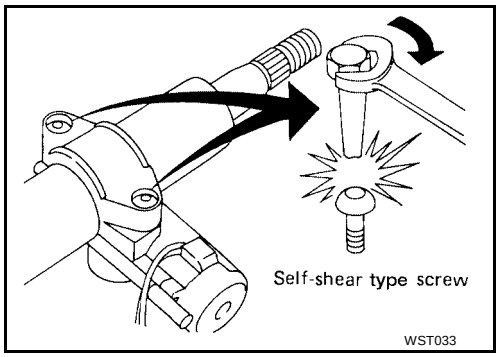


## Inspection

EGS000FW

- When steering wheel does not turn smoothly, check the steering column as follows and replace damaged parts.
  - Check column bearings for damage or unevenness. Lubricate with recommended multi-purpose grease or replace steering column as an assembly, if necessary.
  - Check jacket tube for deformation or breakage. Replace if necessary.
- When the vehicle comes into a light collision, check length “L”.

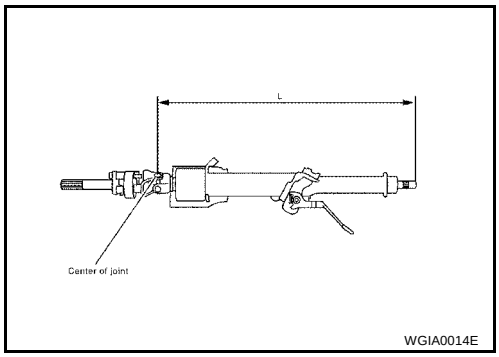


| | |
|---|---|
| **Steering column length “L”** | **: 542 - 544 mm (21.34 - 21.42 in)** |

If out of specification, replace steering column as an assembly.

### TILT MECHANISM

- After installing steering column, check tilt mechanism operation.

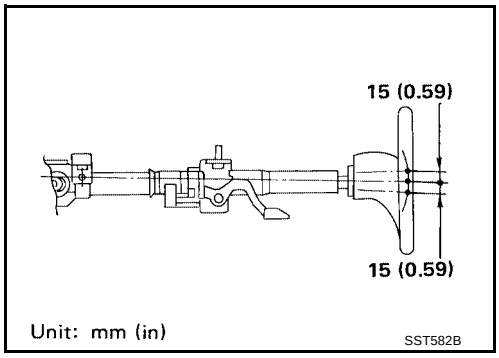

# POWER STEERING GEAR AND LINKAGE

PFP:49001

## Components

EGS000FX

**SEC. 492**

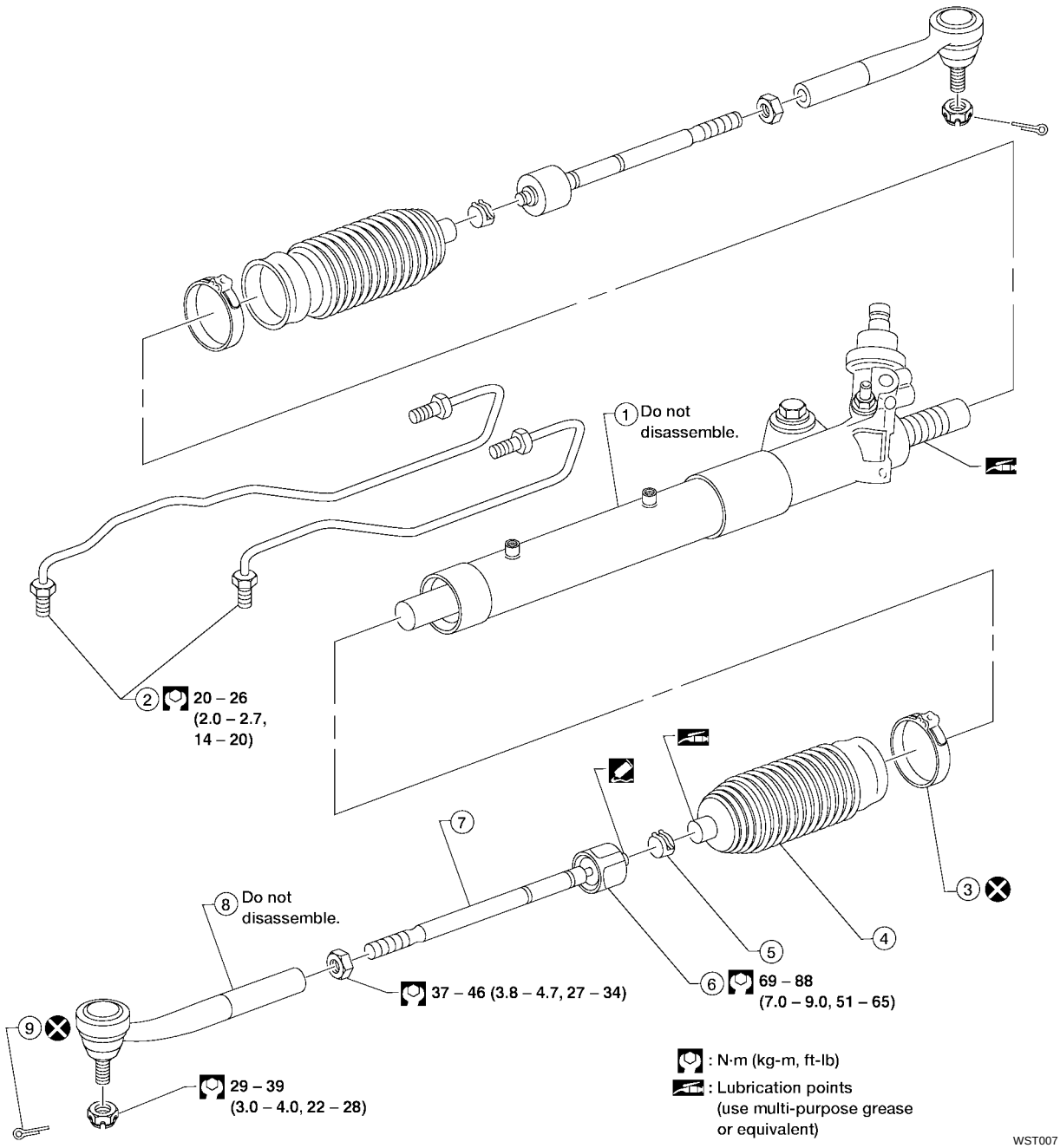


| | | |
|---|---|---|
| 1. Steering gear | 2. Gear housing tube | 3. Boot clamp |
| 4. Dust boot | 5. Boot band | 6. Tie-rod inner socket |
| 7. Tie-rod | 8. Tie-rod outer socket | 9. Cotter pin |

## Removal and Installation

EGS000FY

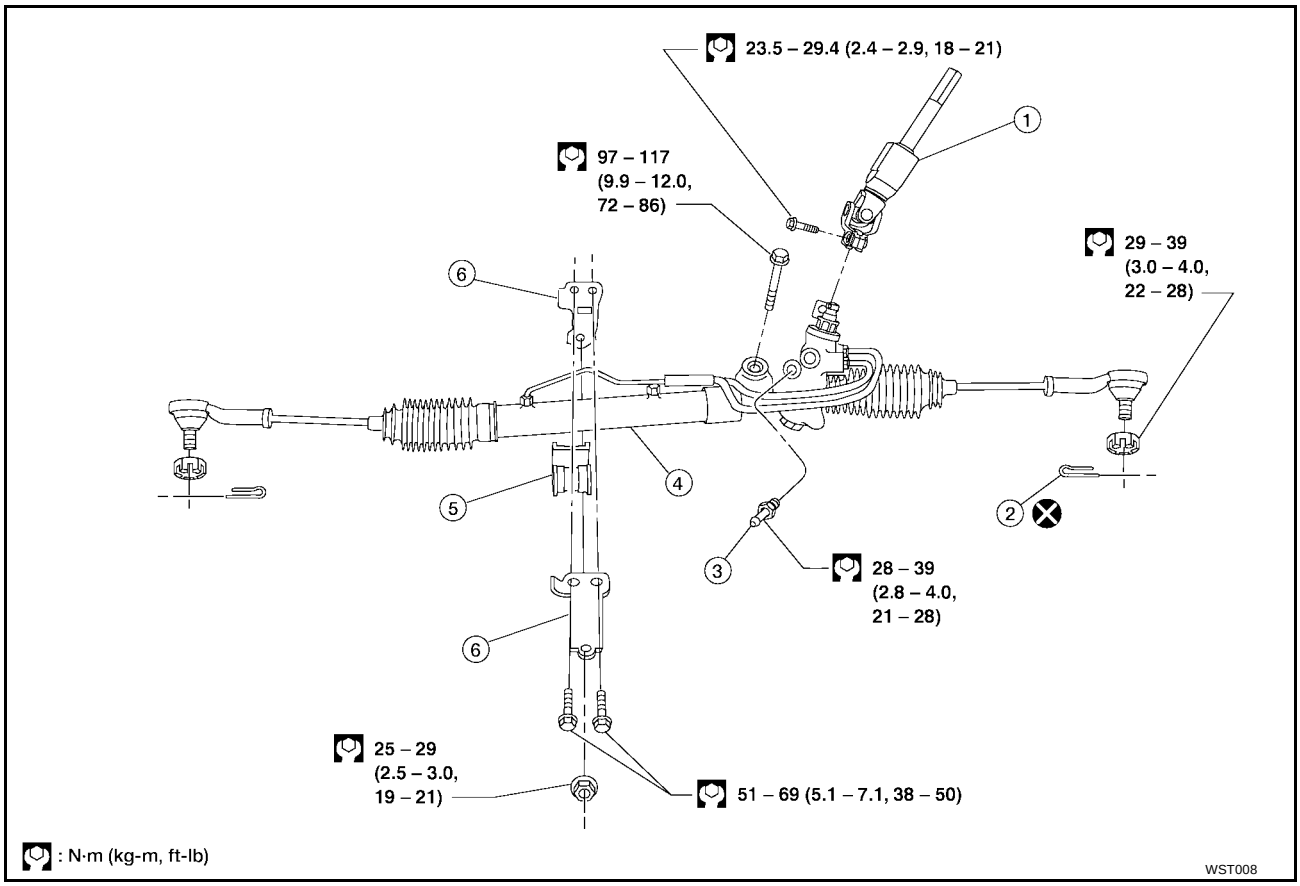


1. Lower joint
2. Cotter pin
3. Low pressure line fitting
4. Gear and linkage assembly
5. Rack mounting insulator
6. Gear housing mounting bracket

### REMOVAL

**CAUTION:**

- **The rotation of the spiral cable (SRS "Air bag" component part) is limited. If the steering gear must be removed, set the front wheels in the straight-ahead direction. Do not rotate the steering column while the steering gear is removed.**
- **Remove the steering wheel before removing the steering lower joint to avoid damaging the SRS spiral cable.**

1. Remove the front wheels and tires.
2. Drain the power steering fluid.
3. Remove the tie-rod outer socket nut and separate the tie-rod from the knuckle using Tool.

   **Tool number : HT72520000 (J25730-B)**

4. Disconnect the high pressure line connector.

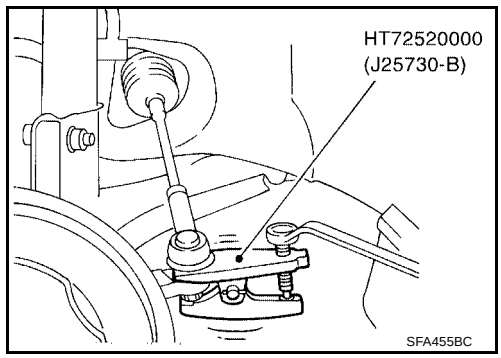

5. Disconnect the steering gear lower joint.
   - Before removing lower joint from gear, set gear in neutral (wheels in straight-ahead position). After removing lower joint, put matching mark on pinion shaft and pinion housing to record neutral position.

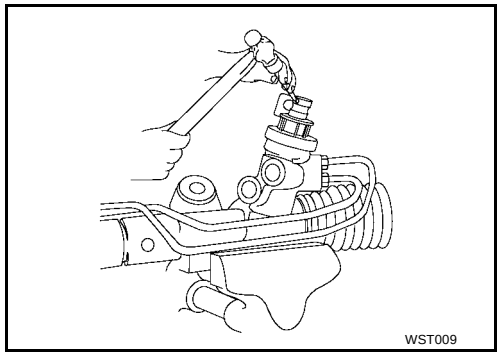


6. Position the bracket for the hoses and harness aside.
7. If necessary, remove the low pressure line fitting.
8. Disconnect the heated oxygen sensor 2 electrical connector.
9. Remove the steering gear mounting bolts.
10. Remove the steering gear through the passenger side.

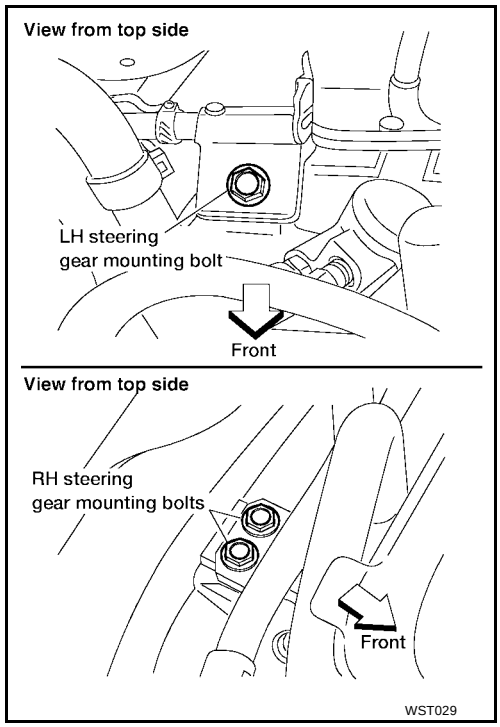


## INSTALLATION

Installation is the reverse order of removal.

- Install the low pressure line fitting.
- Observe specified tightening torque when tightening high pressure line connector and low pressure line fitting. Excessive tightening will damage threads of connector or O-ring.

**Tightening torque**

| | |
|---|---|
| **Low pressure line fitting (1)** | **: 28 - 39 N·m (2.8 - 4.0 kg-m, 21 - 28 ft-lb)** |
| **High pressure side (2)** | **: 15 - 25 N·m (1.5 - 2.5 kg-m, 11 - 18 ft-lb)** |

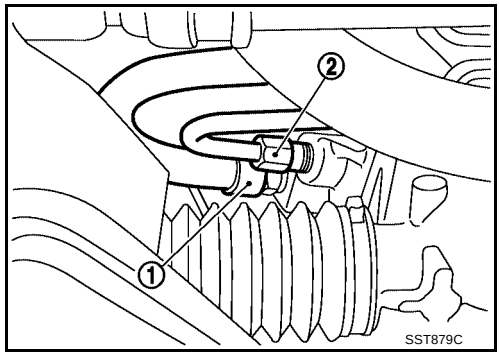


- The O-ring in low pressure line fitting is larger than that in high pressure connector. Take care to install the proper O-ring.

- Initially, tighten tie-rod outer socket nut. Then tighten further to align nut groove with first pin hole so that cotter pin can be installed.

  **Tie rod outer socket nut : 29 - 39 N·m (3.0 - 4.0 kg-m, 22 - 28 ft-lb)**

  **CAUTION:**
  **Tightening torque must not exceed 49 N·m (5 kg-m, 36 ft-lb).**

- To install, set left and right dust boots to equal deflection. Attach lower joint by aligning matching marks of pinion shaft and pinion housing.

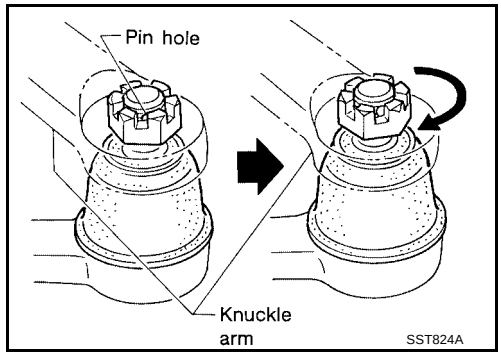


- Tighten gear housing mounting bracket bolts and nut in the order shown.

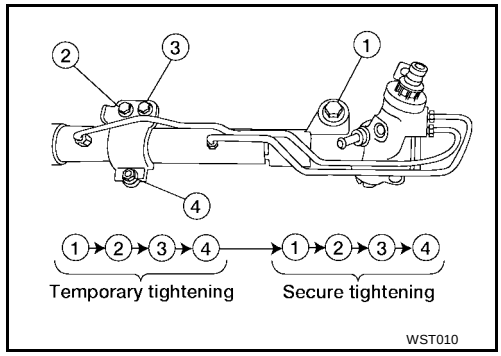


## Disassembly

EGS000FZ

1. Prior to disassembling, measure pinion rotating torque using Tools.

   **Tool numbers : KV48101100 (J26364)**
   **: ST3127S000 (25765-A)**

   **Within ±100° from the neutral position**

   **Average rotating torque : 0.6 - 2.0 N·m (7 - 20 kg-cm, 6 - 17 in-lb)**

   **Maximum torque deviation : 0.5 N·m (7 kg-cm, 5.8 in-lb)**

   **Except for above measuring range**

   **Maximum rotating torque : 1.9 N·m (19 kg-cm, 17 in-lb)**

   **Maximum torque deviation : 0.65 N·m (7 kg-cm, 6 in-lb)**

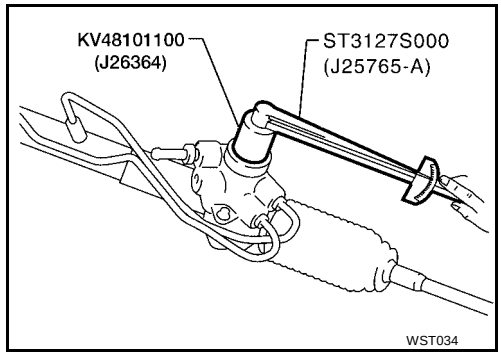


   - **If pinion rotating torque is not within the specifications, replace steering gear assembly.**
   - **Before measuring, disconnect gear housing tube and drain fluid.**
   - **Use soft jaws when holding steering gear housing. Handle gear housing carefully, as it is made of aluminum. Do not grip cylinder in a vise.**

2. Remove tie-rod outer sockets and dust boots.
3. Remove tie-rod inner sockets.

## Inspection

EGS000G0

Thoroughly clean all parts in cleaning solvent or Genuine NISSAN PSF or equivalent, refer to MA-13, "RECOMMENDED FLUIDS AND LUBRICANTS" . Blow dry with compressed air, if available.

### BOOT

- Check condition of boot. If cracked excessively, replace it.
- Check boots for accumulation of power steering fluid.

## TIE-ROD OUTER AND INNER SOCKETS

- Check outer and inner ball joints for swinging force “A” and axial end play “C”.

  **Refer to PS-27, "Steering Gear and Linkage" .**

- Check outer ball joint for rotating torque “B”.

  **Refer to PS-27, "Steering Gear and Linkage" .**

- Check condition of dust cover. If excessively cracked, replace outer tie-rod.

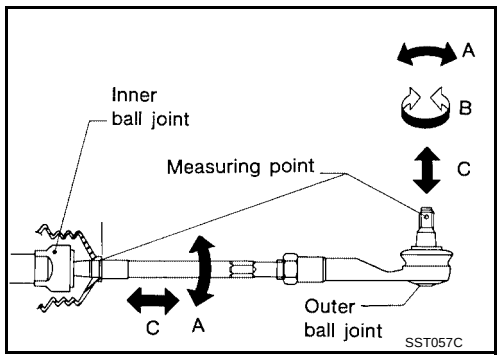


EGS000G1

## Assembly

1. Install tie-rod inner sockets, dust boots and outer sockets.
2. Tighten outer socket lock nut.

   **Tie-rod length “L” : Refer to PS-27, "Steering Gear and Linkage" .**

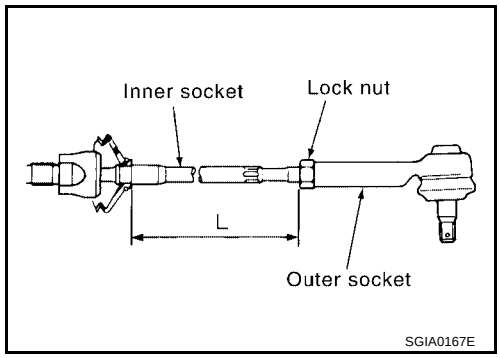


3. Measure rack stroke.

   **Rack stroke “S” : Refer to PS-27, "Steering Gear and Linkage" .**

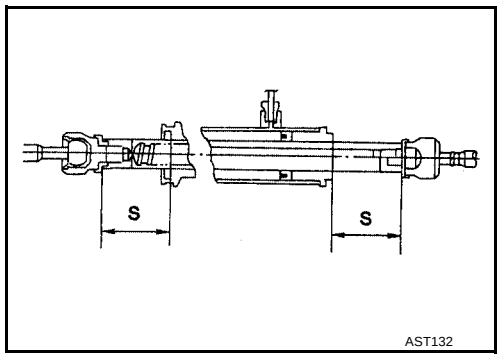


4. Before installing boot, coat the contact surfaces between boot and tie-rod with grease.

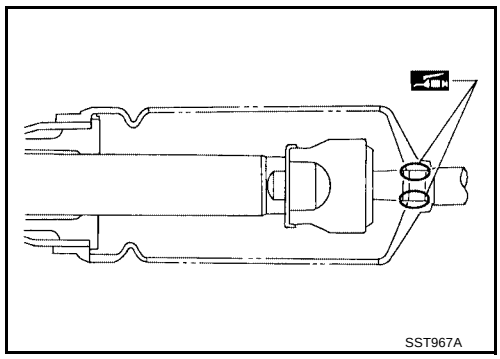

5. Install boot clamps.
   - Install large boot clamp using suitable tool and crimp securely.
   - Install small boot clamp as shown.

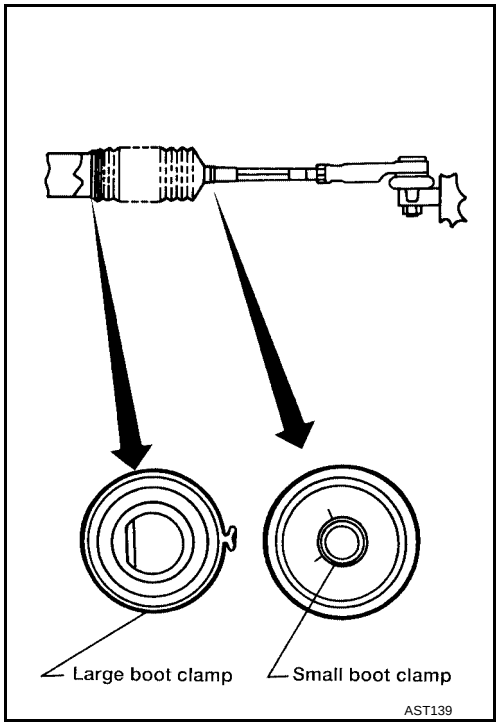

# POWER STEERING OIL PUMP

PFP:49110

## Removal and Installation

EGS000IQ

### REMOVAL

1. Remove the reservoir tank.
2. Remove the engine undercover.
3. Remove the drive belts. Refer to MA-16, "Checking Drive Belts" (QG18DE) or MA-23, "Checking Drive Belts" (QR25DE) for routing.
4. Remove the front exhaust tube. Refer to EX-3, "Removal and Installation" .
5. Disconnect the high pressure line connector.
6. Disconnect the low pressure hose.
7. Remove the power steering through bolt and the power steering pump.

### INSTALLATION

Installation is in the reverse order of removal.

- Refer to PS-22, "Disassembly and Assembly" for tightening specifications.

## Disassembly and Assembly

EGS000G2

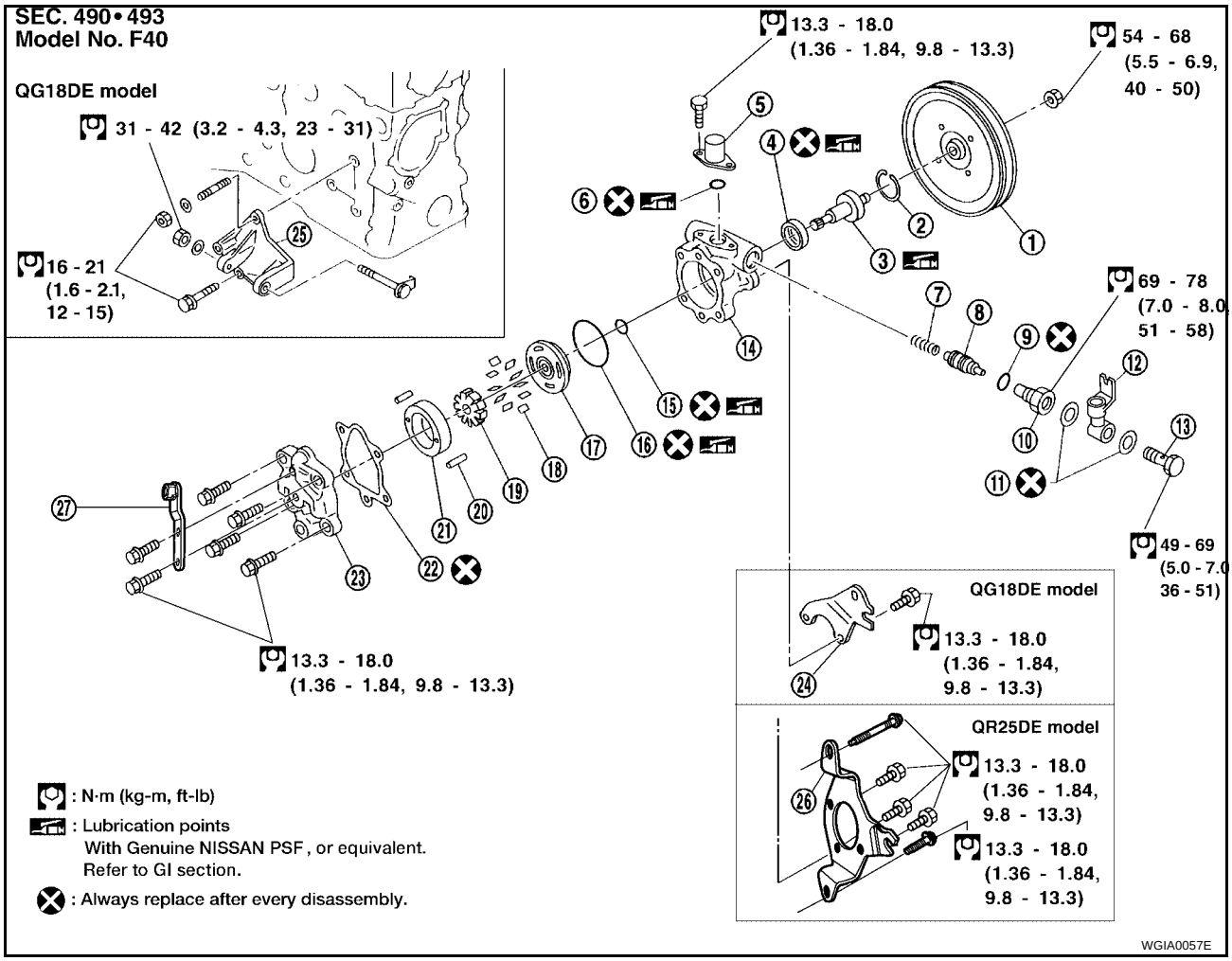


| | | | | | |
|---|---|---|---|---|---|
| 1. | Pulley | 2. | Snap ring | 3. | Drive shaft |
| 4. | Oil seal | 5. | Suction pipe | 6. | O-ring |
| 7. | Spring | 8 | Flow control valve | 9. | O-ring |
| 10. | Connector | 11. | Washer | 12. | Joint |
| 13. | Connector bolt | 14. | Pump case | 15. | O-ring |
| 16. | O-ring | 17. | Front side plate | 18. | Vane |
| 19. | Rotor | 20. | Pin | 21. | Cam ring |
| 22. | Gasket | 23. | Rear cover | 24. | Mounting bracket |
| 25. | Power steering pump bracket | 26. | Mounting bracket | 27. | Mounting bracket |

### PRE-DISASSEMBLY INSPECTION

Disassemble the power steering oil pump only if the following items are found.

- Fluid leak from any point shown in the figure.
- Deformed or damaged pulley
- Poor performance

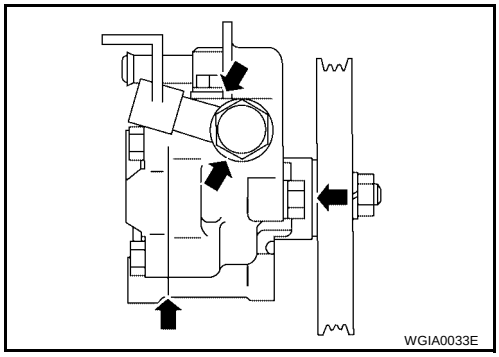

## DISASSEMBLY

**CAUTION:**

- **Parts which can be disassembled are strictly limited. Never disassemble parts other than those specified.**
- **Disassemble in as clean a place as possible.**
- **Clean your hands before disassembly.**
- **Do not use rags; use nylon cloths or paper towels.**
- **Refer to PS-2, "Precautions for Steering System" .**
- **When disassembling and reassembling, do not let foreign matter enter or contact the parts.**
- Remove snap ring, then press the drive shaft out.

  **CAUTION:**
  **Be careful not to drop drive shaft.**

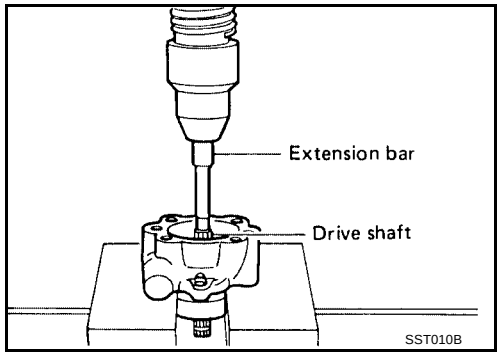


- Remove oil seal using suitable tool.

  **CAUTION:**
  **Be careful not to damage front housing.**

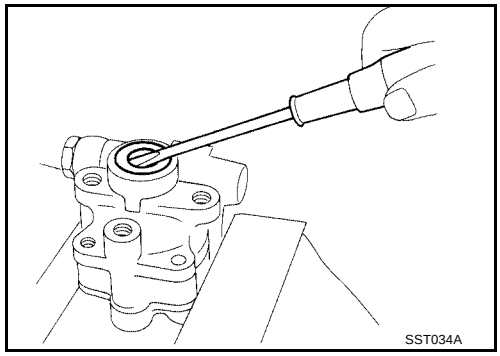


- Remove connector and flow control valve with spring.

  **CAUTION:**
  **Be careful not to drop flow control valve.**

  **NOTE:**
  Do not disassemble flow control valve.

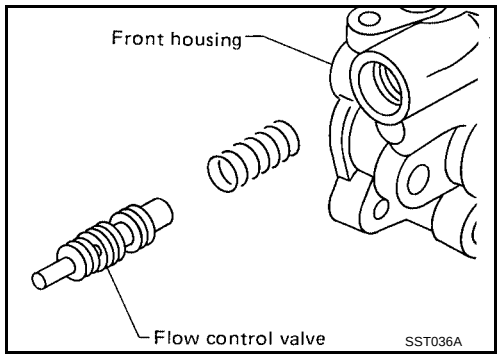


## INSPECTION

- If pulley is cracked or deformed, replace it.
- If an oil leak is found around pulley shaft oil seal, replace the seal.
- If serration on pulley or pulley shaft is deformed or worn, replace it.

## ASSEMBLY

Assemble oil pump, noting the following.

- Make sure O-rings and oil seal are properly installed.
- Always install new O-rings and oil seal.
- Be careful of oil seal direction.
- Cam ring, rotor and vanes must be replaced as a set if necessary.

- Coat each part with Genuine NISSAN PSF or equivalent, refer to MA-13, "RECOMMENDED FLUIDS AND LUBRICANTS" , when assembling.
- Pay attention to the direction of rotor.

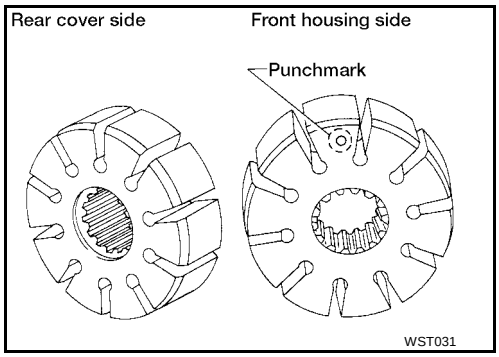


- When assembling vanes to rotor, flat surfaces of vanes must face inside of rotor (rounded surfaces of vanes face cam ring side).

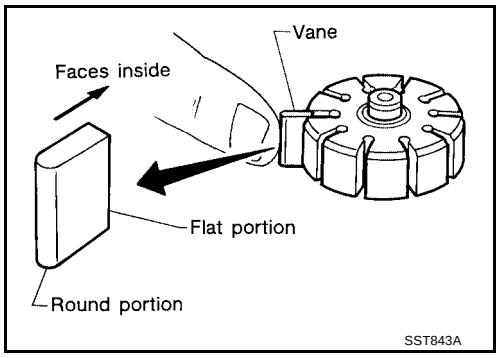


- Insert pin 2 into pin groove 1 of front housing and front side plate. Then install cam ring 3 as shown at left.

  **Cam ring : $D_1$ is less than $D_2$ .**

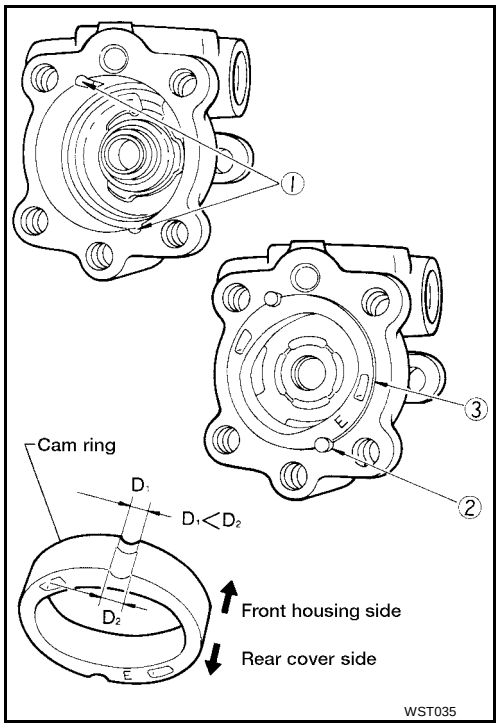

# HYDRAULIC LINE

PFP:49721

## Removal and Installation

EGS000JP

### QG18DE Engine

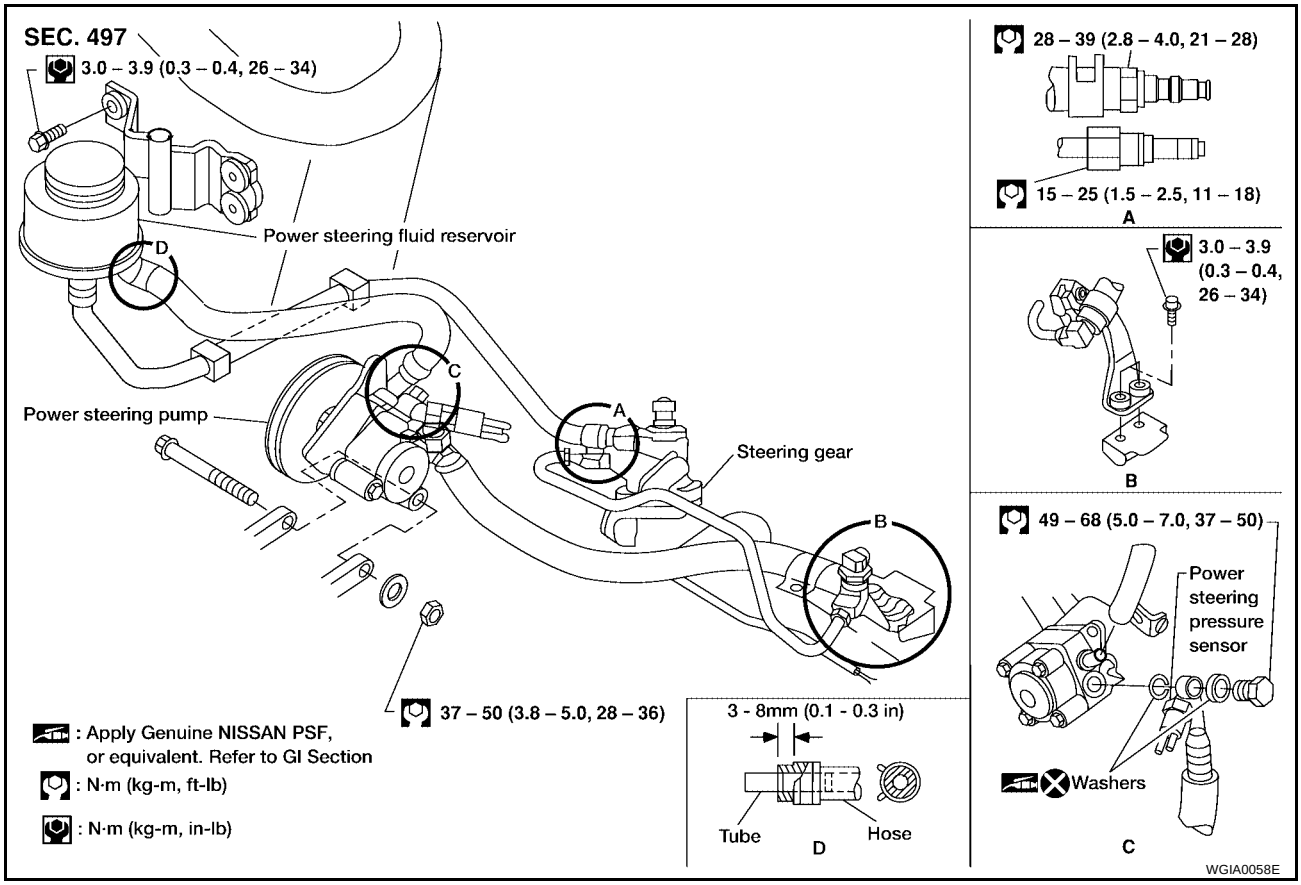

## QR25DE Engine

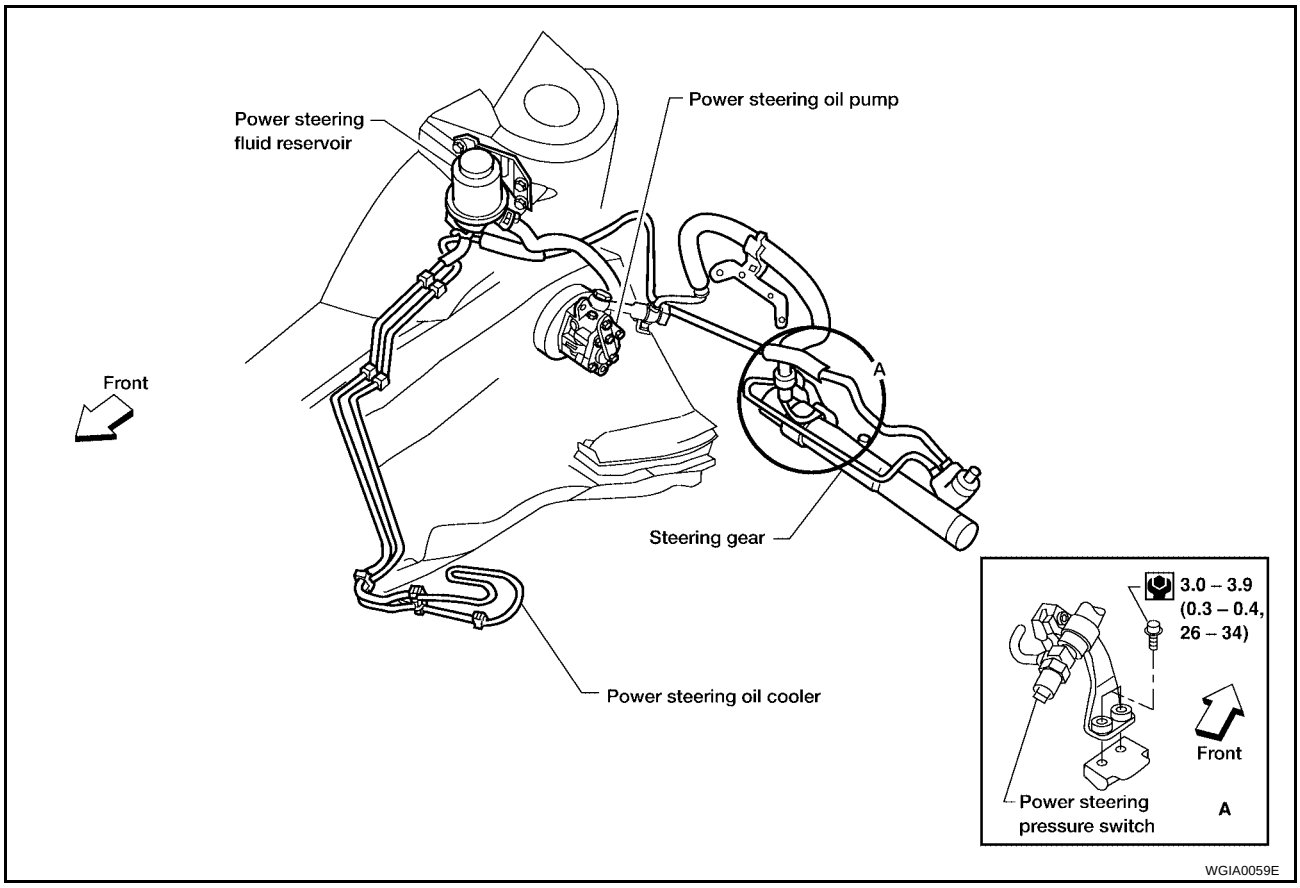

# SERVICE DATA AND SPECIFICATIONS (SDS)

PFP:00030

## General Specifications

EGS000G3

| Applied model | QG18DE | QR25DE |
|---|---|---|
| Steering model | Power steering | |
| Steering gear type | Rack and Pinion (PR25T) | |
| Steering overall gear ratio | 17.48 | 15.80 |
| Turns of steering wheel (Lock to lock) | 3.01 | 2.4 |
| Steering column type | Collapsible, tilt | |

## Steering Wheel

EGS000G4

| Applied model | All |
|---|---|
| Steering wheel axial play mm (in) | 0 (0) |
| Steering wheel play mm (in) | 35 (1.38) or less |
| Movement of gear housing mm (in) | ±2 (±0.08) or less |

## Steering Column

EGS000G5

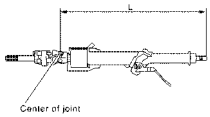


SST855C

| Applied model | All |
|---|---|
| Steering column length “L” mm (in) | 542 - 544 (21.34 - 21.42) |

## Steering Gear and Linkage

EGS000G6

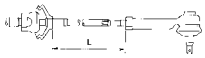

SST867C

| Applied model | | QG18DE | QR25DE |
|---|---|---|---|
| Steering gear type | | Rack and Pinion (PR25T) | |
| Tie-rod outer socket | Swinging force at cotter pin hole: “A” N (kg, lb) | 6.9 - 65.7 (0.66 - 6.59, 1.5 - 14.8) | |
| | Rotating torque: “B” N·m (kg-cm, in-lb) | 0.29 - 2.94 (3.0 - 30.0, 2.6 - 26.0) | |
| | Axial end play: “C” mm (in) | 0.4 (0.016) or less | |
| | Initial tightening torque N·m (kg-cm, ft-lb) | 29 - 39 (3 - 4, 22 - 28) | |
| | Maximum tightening torque N·m (kg-cm, ft-lb) | 49 (5, 36) | |
| Tie-rod inner socket | Swinging force*: “A” N (kg, lb) | 5.9 - 46.1 (0.58 - 4.65, 1.3 - 10.4) | |
| | Axial end play: “C” mm (in) | 0.2 (0.004) or less | |
| | Initial tightening torque N·m (kg-cm, ft-lb) | 29 - 39 (3 - 4, 22 - 28) | |
| | Maximum tightening torque N·m (kg-cm, ft-lb) | 49 (5, 36) | |
| Tie-rod standard length “L” mm (in) | | 133.04 (5.238) | 136.09 (5.358) |

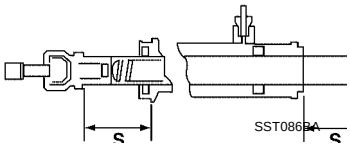


| | | |
|---|---|---|
| Retainer adjustment<br>Adjusting screw | Initial tightening torque N·m (kg-cm, in-lb) | 4.9 - 5.9 (50 - 60, 43 - 52) |
| | Retightening torque after loosening N·m (kg-cm, in-lb) | 0.2 (2, 1.7) |
| | Tightening torque after gear has settled N·m (kg-cm, in-lb) | 4.9 - 5.9 (50 - 60, 43 - 52) |
| | Returning angle degree | 60° - 80° |
| Steering gear type | | PR25T |
| Rack stroke “S” mm (in) | | 65 (2.56) |
| Pinion gear preload without gear fluid<br>Within ±100° from the neutral position | Average rotating torque N·m (kg-cm, in-lb) | 0.6 - 2.0 (7 - 20, 6 - 17) |
| | Maximum torque deviation N·m (kg-cm, in-lb) | 0.6 (7, 5.8) |
| Except above range | Maximum rotating torque N·m (kg-cm, in-lb) | 1.9 (19, 17) |
| | Maximum torque deviation N·m (kg-cm, in-lb) | 0.65 (7, 6) |

*: Measuring point [l: 172 mm (6.77 in)]

## Power Steering

EGS000G7

| Applied model | | | QG18DE | QR25DE |
|---|---|---|---|---|
| Steering gear type | | | Rack and Pinion (PR25T) | |
| Pump type | | | F40 | |
| Rack sliding force N (kg, lb)<br>Under normal operating oil pressure | Range within ±11.5 mm (±0.453 in) from the neutral position at rack speed of 3.5 mm (0.138 in)/s | Average rack sliding force | 140 - 330 (14.3 - 33.6, 31.5 - 74.1) | 160 - 350 (16.3 - 35.7, 36.0 - 78.7) |
| | | Maximum force deviation | 98 (10, 22) | |
| | Except for the above range | Maximum rack sliding force | 294 (30, 66) | |
| | | Maximum force deviation | 147 (15, 33) | |
| Steering wheel turning force<br>(Measured at one full turn from the neutral position) N (kg, lb) | | | 39 (4, 9) or less | |
| Fluid capacity (Approximate) ℓ (US qt, Imp qt) | | | 1.0 (1-1/8, 7/8) | |
| Oil pump maximum pressure kPa (kg/cm$^2$ , psi) | | | 7,649 - 8,238 (78 - 84, 1,109 - 1,194) | 8,000 - 8,800 (82 - 90, 1,160 - 1,276) |