ENGINE MECHANICAL

SECTION EM

CONTENTS

QG18DE

CONTENTS (Cont'd)

CONTENTS (Cont'd)

Parts Requiring Angular Tightening

NIEM0041

- Use an angle wrench for the final tightening of the following engine parts:

a) Cylinder head bolts
b) Main bearing cap bolts
c) Connecting rod cap nuts

- Do not use a torque value for final tightening.
- The torque value for these parts are for a preliminary step.
- Ensure thread and seat surfaces are clean and coated with engine oil.

Liquid Gasket Application Procedure

NIEM0042

1. **Use a scraper to remove old RTV silicone sealant from mating surfaces and grooves. Also, completely clean any oil from these areas.**
2. **Apply a continuous bead of RTV silicone sealant to mating surfaces. (Use Genuine RTV silicone sealant Part No. 999MP-A7007 or equivalent).**
   - **For oil pan, be sure RTV silicone sealant diameter is 3.5 to 4.5 mm (0.138 to 0.177 in).**
   - **For areas except oil pan, be sure RTV silicone sealant diameter is 2.0 to 3.0 mm (0.079 to 0.118 in).**
3. **Apply RTV silicone sealant around the inner side of bolt holes (unless otherwise specified).**
4. **Assembly should be done within 5 minutes after coating.**
5. **Wait at least 30 minutes before refilling engine oil and engine coolant.**

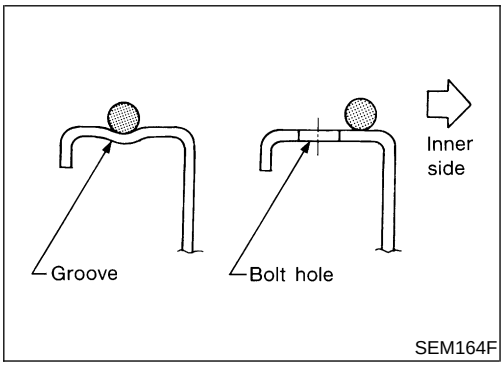

SEM164F

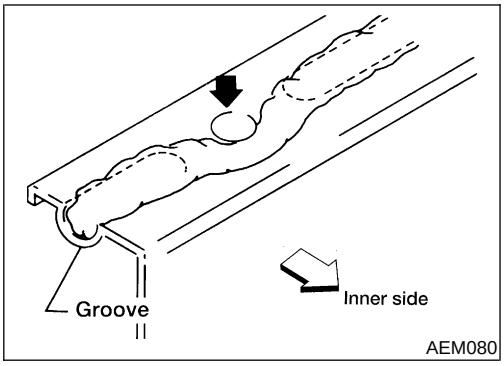

AEM080

Special Service Tools

NIEM0043

The actual shapes of Kent-Moore tools may differ from those of special service tools illustrated here.

Tool number (Kent-Moore No.) Tool name	Description	
ST0501S000 (—) Engine stand assembly 1 ST05011000 (—) Engine stand 2 ST05012000 (—) Base	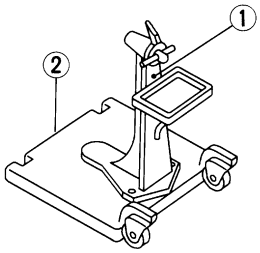 NT042	Disassembling and assembling
Engine attachment assembly 1 KV10106500 (—) Engine attachment 2 KV10113300 (—) Sub-attachment	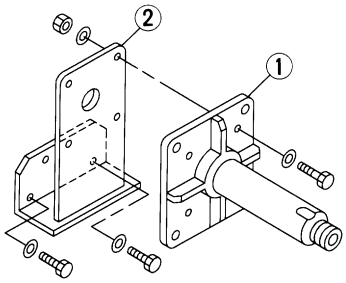 NT029	Overhauling engine
ST10120000 (J24239-O1) Cylinder head bolt wrench	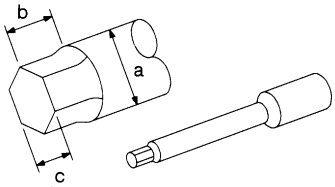 NT583	Loosening and tightening cylinder head bolt **a: 13 mm (0.51 in) dia.** **b: 12 mm (0.47 in)** **c: 10 mm (0.39 in)**
KV10116200 (J26336-B) Valve spring compressor 1 KV10115900 (J26336-20) Attachment 2 KV10109220 (—) Adapter	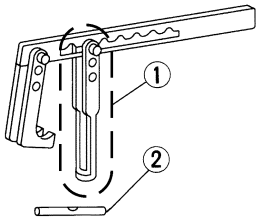 WEM044	Disassembling valve mechanism
KV10115600 (J38958) Valve oil seal drift	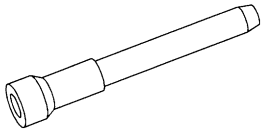 NT024	Installing valve oil seal
KV10107902 (J-36467) Valve oil seal puller	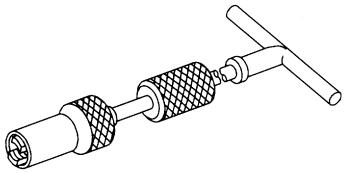 NT011	Displacement valve lip seal

Special Service Tools (Cont'd)

Tool number (Kent-Moore No.) Tool name	Description	
KV101151S0 (J38972) Lifter stopper set 1 KV10115110 Camshaft pliers 2 KV10115120 Lifter stopper	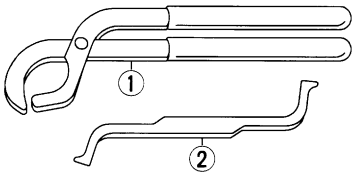 NT041	Changing shims
EM03470000 (J8037) Piston ring compressor	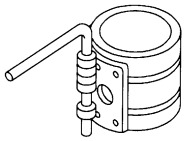 NT044	Installing piston assembly into cylinder bore
KV10107400 (J26365-12, J26365-A) Piston pin press stand 1 KV10107310 (—) Center shaft 2 ST13040020 (—) Stand 3 ST13040030 (—) Spring 4 KV10107320 (—) Cap 5 ST13040050 (—) Drift	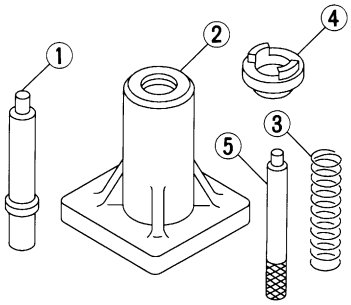 NT013	Disassembling and assembling piston pin
KV10111100 (J37228) Seal cutter	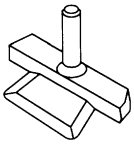 NT046	Removing oil pan
WS39930000 (—) Tube presser	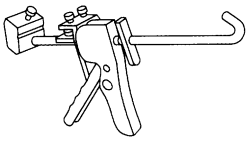 NT052	Pressing the tube of liquid gasket
KV10112100 (BT-8653-A) Angle wrench	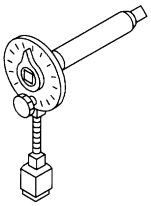 NT014	Tightening bolts for bearing cap, cylinder head, etc.

Tool number (Kent-Moore No.) Tool name	Description	
ST16610001 (J23907) Pilot bushing puller	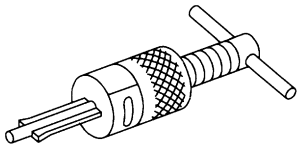 NT045	Removing pilot bushing
(J36471-A) Front (heated) oxygen sensor wrench	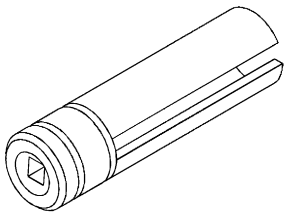 NT379	Loosening or tightening heated oxygen sensor with 22 m (0.87 in) hexagon nut
(J44626) Air fuel ratio (A/F) sensor wrench	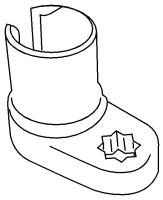 LEM054	Loosening or tightening air fuel ratio (A/F) sensor 1
KV101056S0 (—) Rear gear stopper 1 KV10105620 (—) Adapter 2 KV10105610 (—) Plate assembly	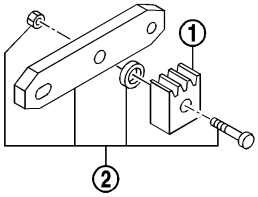 NT773	Preventing crankshaft from rotating

Commercial Service Tools

NIEM0044

Tool number (Kent-Moore No.) Tool name	Description	
Spark plug wrench	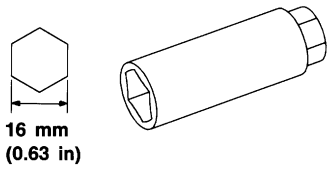 NT047	Removing and installing spark plug

Commercial Service Tools (Cont'd)

Tool number (Kent-Moore No.) Tool name	Description	
Valve seat cutter set	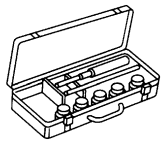 NT048	Finishing valve seat dimensions
Piston ring expander	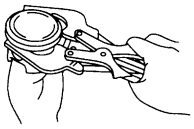 NT030	Removing and installing piston ring
Valve guide drift	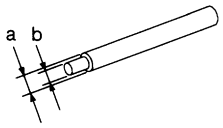 NT015	Removing and installing valve guide **Intake & Exhaust:** **a: 9.5 mm (0.374 in) dia.** **b: 5.5 mm (0.217 in) dia.**
Valve guide reamer	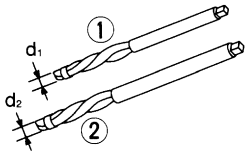 NT016	Reaming valve guide **1** or hole for oversize valve guide **2** **Intake & Exhaust:** **d_1: 5.5 mm (0.217 in) dia.** **d_2: 9.685 mm (0.3813 in) dia.**
Front oil seal drift	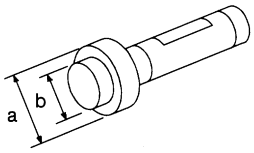 NT049	Installing front oil seal **a: 52 mm (2.05 in) dia.** **b: 40 mm (1.57 in) dia.**
Rear oil seal drift	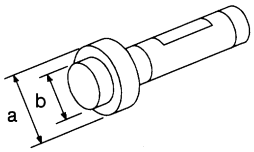 NT049	Installing rear oil seal **a: 103 mm (4.06 in) dia.** **b: 84 mm (3.31 in) dia.**
(J-43897-18) (J-43897-12) Oxygen sensor thread cleaner	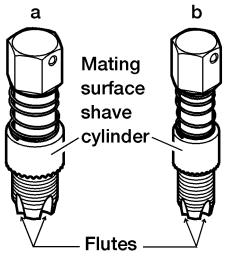 AEM488	Reconditioning the exhaust system threads before installing a new oxygen sensor (Use with anti-seize lubricant shown below.) **a: J-43897-18 [18 mm dia.] for zirconia oxygen sensor** **b: J-43897-12 [12 mm dia.] for titania oxygen sensor**

Tool number (Kent-Moore No.) Tool name	Description
Anti-seize lubricant (Permatex 133AR or equivalent meeting MIL specification MIL-A-907)	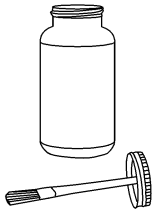 AEM489 Lubricating oxygen sensor thread cleaning tool when reconditioning exhaust system threads

NVH Troubleshooting — Engine Noise

NIEM0045S01

Use the chart below to help you find the cause of the symptom.

1. Locate the area where noise occurs.
2. Confirm the type of noise.
3. Specify the operating condition of engine.
4. Check specified noise source.

If necessary, repair or replace these parts.

Location of noise	Type of noise	Operating condition of engine						Source of noise	Check item	Reference page
		Before warm-up	After warm-up	When start-ing	When idling	When racing	While driv-ing			
Top of Engine Rocker Cover Cylin-der Head	Ticking or click	C	A	—	A	B	—	Tappet noise	Valve clearance	EM-45
	Rattle	C	A	—	A	B	C	Camshaft bearing noise	Camshaft journal clear-ance Camshaft runout	EM-36, EM-35
Crankshaft Pulley Cylinder Block (Side of Engine) Oil pan	Slap or knock	—	A	—	B	B	—	Piston pin noise	Piston and piston pin clearance Connecting rod bushing clearance	EM-55, 61
	Slap or rap	A	—	—	B	B	A	Piston slap noise	Piston-to-bore clearance Piston ring side clearance Piston ring end gap Connecting rod bend and torsion	EM-57, 56, 56, 56,
	Knock	A	B	C	B	B	B	Connecting rod bearing noise	Connecting rod bearing clearance (Big end) Connecting rod bushing clearance (Small end)	EM-60, 61
	Knock	A	B	—	A	B	C	Main bearing noise	Main bearing oil clear-ance Crankshaft runout	EM-58, EM-59
Front of Engine Tim-ing Chain Cover	Tapping or ticking	A	A	—	B	B	B	Timing chain and chain tensioner noise	Timing chain cracks and wear Timing chain tensioner operation	EM-24
Front of Engine	Squeak or fizzing	A	B	—	B	—	C	Other drive belts (stick-ing or slip-ping)	Drive belts deflection	***MA-16***, “Checking Drive Belts”
	Creaking	A	B	A	B	A	B	Other drive belts (slip-ping)	Idler pulley bearing operation	
	Squall or creak	A	B	—	B	A	B	Water pump noise	Water pump operation	***LC-13***, “INSPEC-TION”

A: Closely related B: Related C: Sometimes related —: Not related

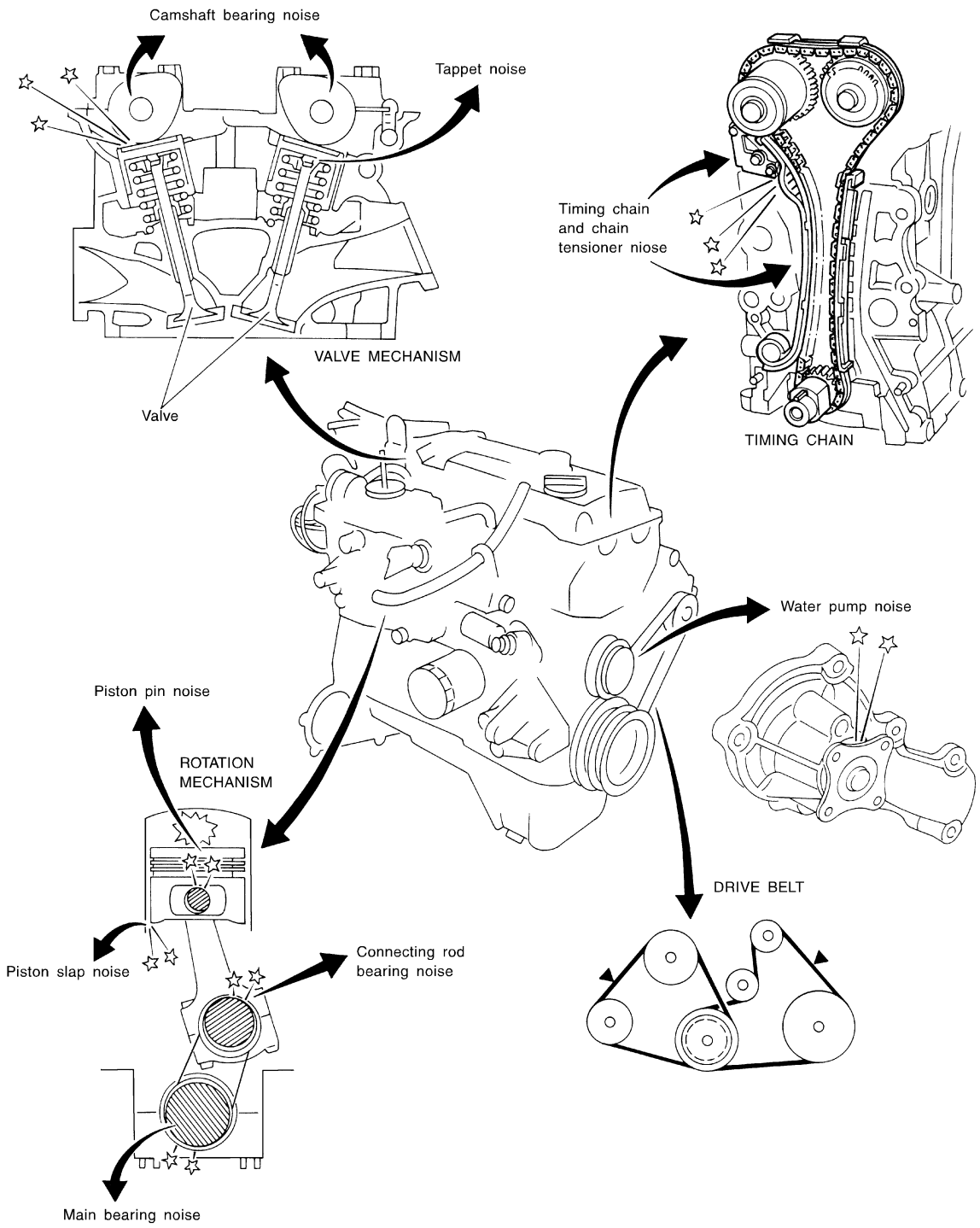
Camshaft bearing noise
Tappet noise
VALVE MECHANISM
Valve
Timing chain
and chain
tensioner niose
TIMING CHAIN
Water pump noise
Piston pin noise
ROTATION
MECHANISM
Piston slap noise
Connecting rod
bearing noise
Main bearing noise
DRIVE BELT

SEM937F

Removal and Installation

NIEM0046

SEC. 140•147•150•210

④ 6.7 – 7.8 (0.68 – 0.80, 59 – 69)

17 – 24 (1.7 – 2.4, 12 – 17)

16 – 21 (1.6 – 2.1, 12 – 15)

17 – 24 (1.7 – 2.4, 12 – 17)

16.6 – 23.5 (1.7 – 2.3, 13 – 17)

16 – 21 (1.6 – 2.1, 12 –15)

Washer

Gum ring

⑨

②

Gasket

39.2 – 49.0 (4.0 – 4.9, 29 – 36)

17 – 24 (1.7 – 2.4, 12 – 17)

39.2 – 49.0 (4.0 – 5.0, 29 – 36)

⑫

To intake manifold

To exhaust manifold

Gasket

③

39.2 – 49.0 (4.0 – 5.0, 29 –36)

① 12 – 17 (1.22 – 1.73, 8.8 – 12.5)

Gasket

17 – 24 (1.7 – 2.4, 12 – 17)

6.3 – 8.3 (0.64 – 0.85, 55.6 – 73.8)

17 – 24 (1.7 – 2.4, 12 – 17)

⑥

17 – 24 (1.7 – 2.4, 12 – 17)

Gasket

⑪

⑬ 12.3 – 19.1 (1.3 – 1.9, 9 – 14)

⑧

⑩

17 – 24 (1.7 – 2.4, 12 – 17)

Gasket

⑤

6.3 – 8.3 (0.64 – 0.85, 55.6 – 73.8)

⑦

⑦

: N·m (kg-m, in-lb)

: N·m (kg-m, ft-lb)

17 – 24 (1.7 – 2.4, 12 – 17)

17 – 24 (1.7 – 2.4, 12 – 17)

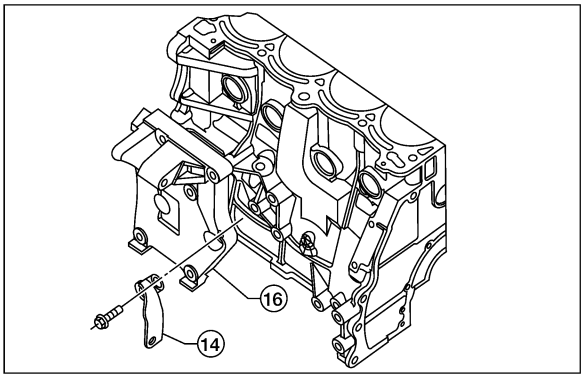

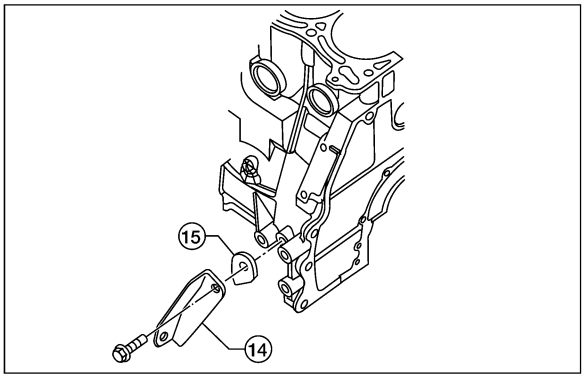

WEM089

1. Oil pressure switch
2. EGR valve
3. EGR guide tube
4. Air relief plug
5. Intake manifold
6. Intake manifold upper support
7. Intake manifold rear supports
8. Oil filter
9. Thermostat
10. Water pump
11. Water pump pulley
12. EGR tube
13. EGR temperature sensor
14. Support container
15. Transmission gusset
16. Component bracket

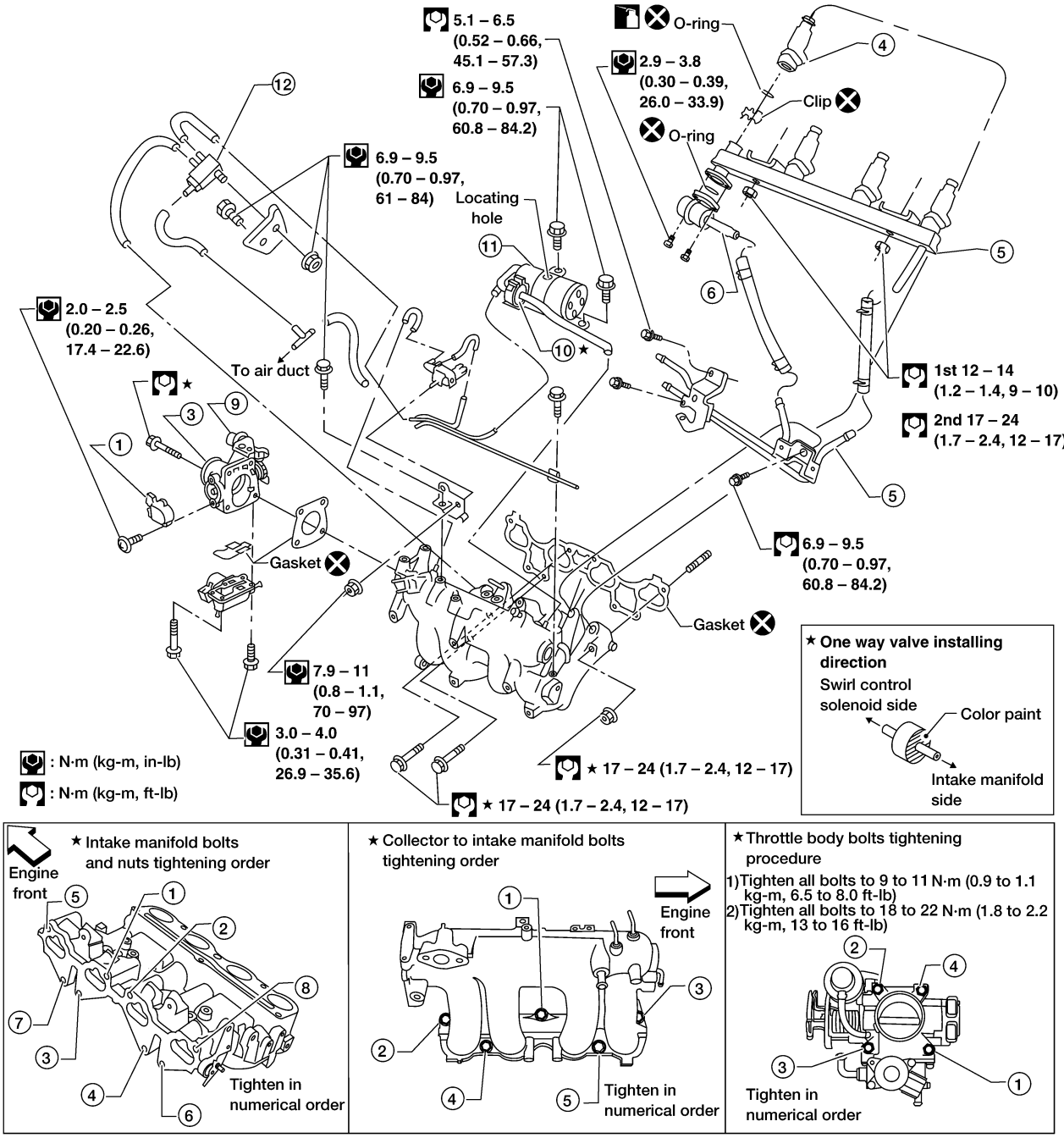

WEM061

1. Throttle position sensor
2. IACV-AAC valve
3. Throttle body
4. Injector
5. Injector tube
6. Pressure regulator
7. Intake manifold
8. Canister purge control valve
9. Throttle opener
10. One way valve
11. Vacuum tank
12. Swirl control solenoid valve

QG18DE (EXCEPT CALIF. CA MODEL)

NIEM0046S02

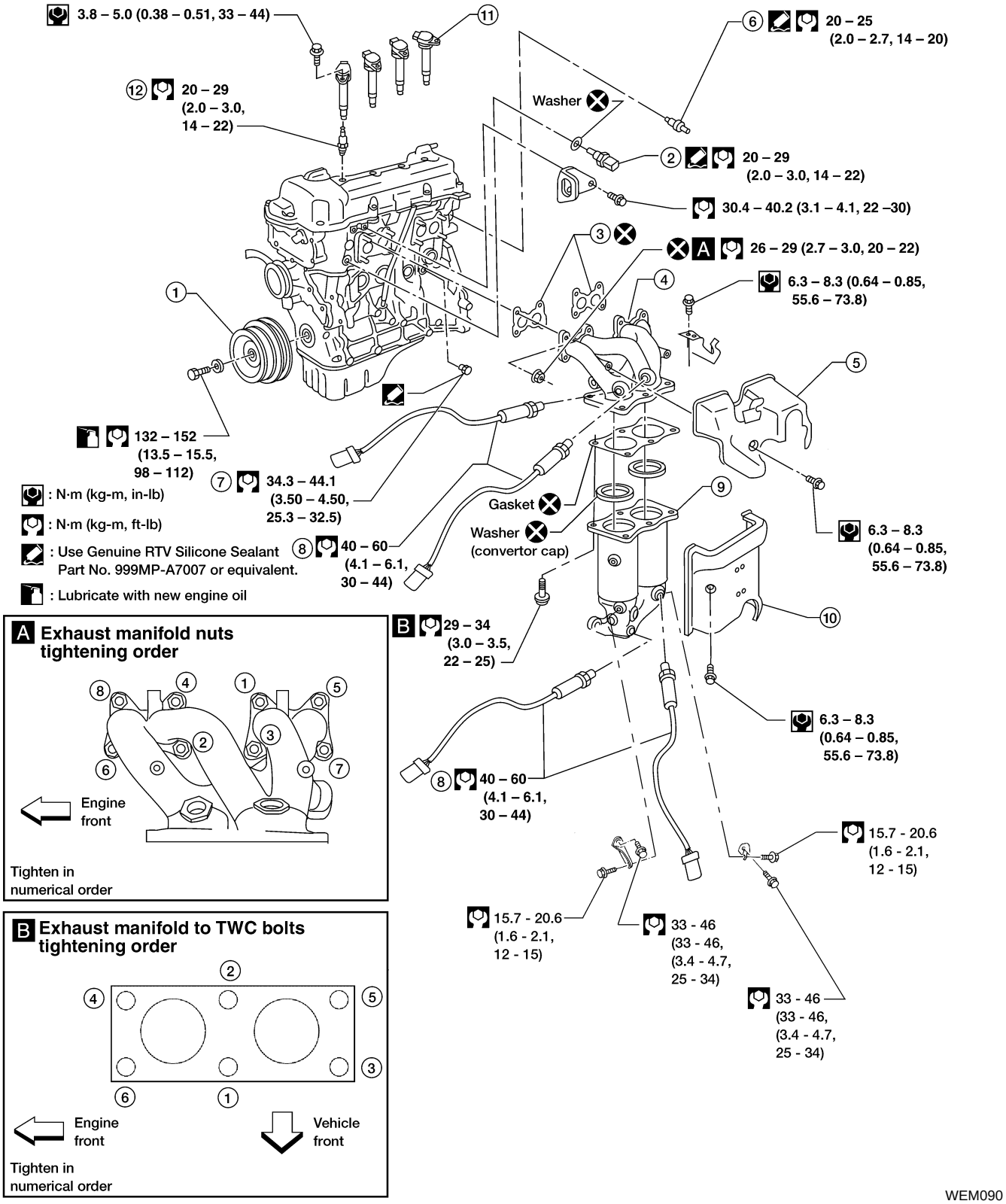

1. Crankshaft pulley
2. Engine coolant temperature sensor
3. Gasket
4. Exhaust manifold
5. Exhaust manifold cover
6. Thermal transmitter
7. Water drain plug
8. Heated oxygen sensor
9. TWC (manifold)
10. Converter cover
11. Ignition coil
12. Spark plug

QG18DE (CALIF. CA MODEL)

=NIEM0046S03

CAUTION:

If the Calif. CA Model's TWC (manifold three way catalyst) or ADS-TWC (adsorber pre-catalyst) replacement is necessary, always replace the TWC together with the ADS-TWC. Never replace these catalysts individually. The TWC and the ADS-TWC are only available together as a kit.

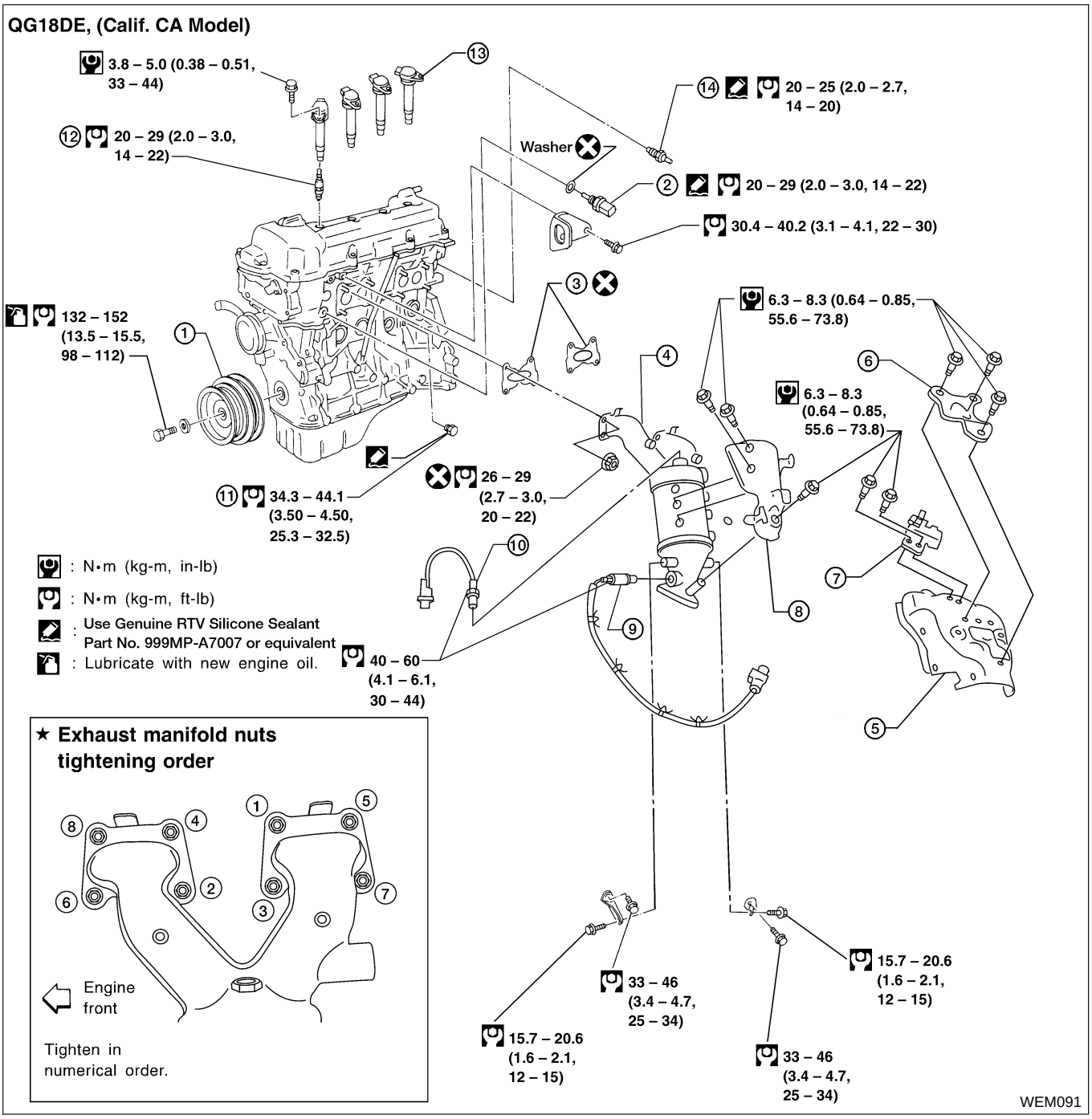

1. Crankshaft pulley
2. Engine coolant temperature sensor
3. Gasket
4. TWC (manifold)
5. TWC manifold cover
6. Air fuel ratio sensor cover
7. Sensor wire bracket
8. TWC cover
9. Heated oxygen sensor 1 (front)
10. Air fuel ratio (A/F) sensor 1
11. Water drain plug
12. Spark plug
13. Ignition coil
14. Thermal transmitter

1. Warm up engine.
2. Turn ignition switch OFF.
3. Release fuel pressure.
   Refer to ***EC-67*** [QG18DE (except Calif. CA Model)] or ***EC-743*** [QG18DE (Calif. CA Model)], “Fuel Pressure Release”.
4. Remove ignition coils.
5. Remove spark plugs.

- Clean area around plug with compressed air before removing the spark plug.

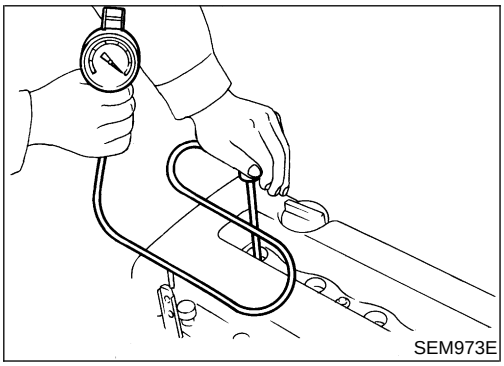
SEM973E


20 mm (0.79 in) dia.

Use compressor tester whose end (rubber portion) is less than 20 mm (0.79 in) dia. Otherwise, it may be caught by cylinder head during removal.

SEM387C

6. Attach a compression tester to No. 1 cylinder.
7. Depress accelerator pedal fully to keep throttle valve wide open.
8. Crank engine and record highest gauge indication.
9. Repeat the measurement on each cylinder as shown above.

- **Always use a fully-charged battery to obtain specified engine speed.**

Compression pressure: kPa (bar, kg/cm^2, psi)/rpm

Standard

1,324 (13.24, 13.5, 192)/350

Minimum

1,157 (11.57, 11.5, 168)/350

Maximum allowable difference between cylinders

98 (0.98, 1.0, 14)/350

10. If cylinder compression in one or more cylinders is low, pour a small amount of engine oil into the cylinder through the spark plug hole and retest compression.

- **If adding oil improves cylinder compression, piston rings may be worn or damaged. If so, replace piston rings after checking piston.**
- **If pressure stays low, a valve may be sticking or seating improperly. Inspect and repair valve and valve seat. Refer to “VALVE”, EM-67 and “VALVE SEAT”, EM-71. If valve or valve seat is damaged excessively, replace them.**
- If compression in any two adjacent cylinders is low and if adding oil does not improve compression, there is leakage past the gasket surface. If so, replace cylinder head gasket.

11. Install spark plugs, ignition coils and fuel pump fuse.
12. Erase DTC if any DTC appears. Refer to ***EC-98*** [QG18DE (except Calif. CA Model)] or ***EC-769*** [QG18DE (Calif. CA Model)], “HOW TO ERASE EMISSION-RELATED DIAGNOSTIC INFORMATION”.

Components

NIEM0048

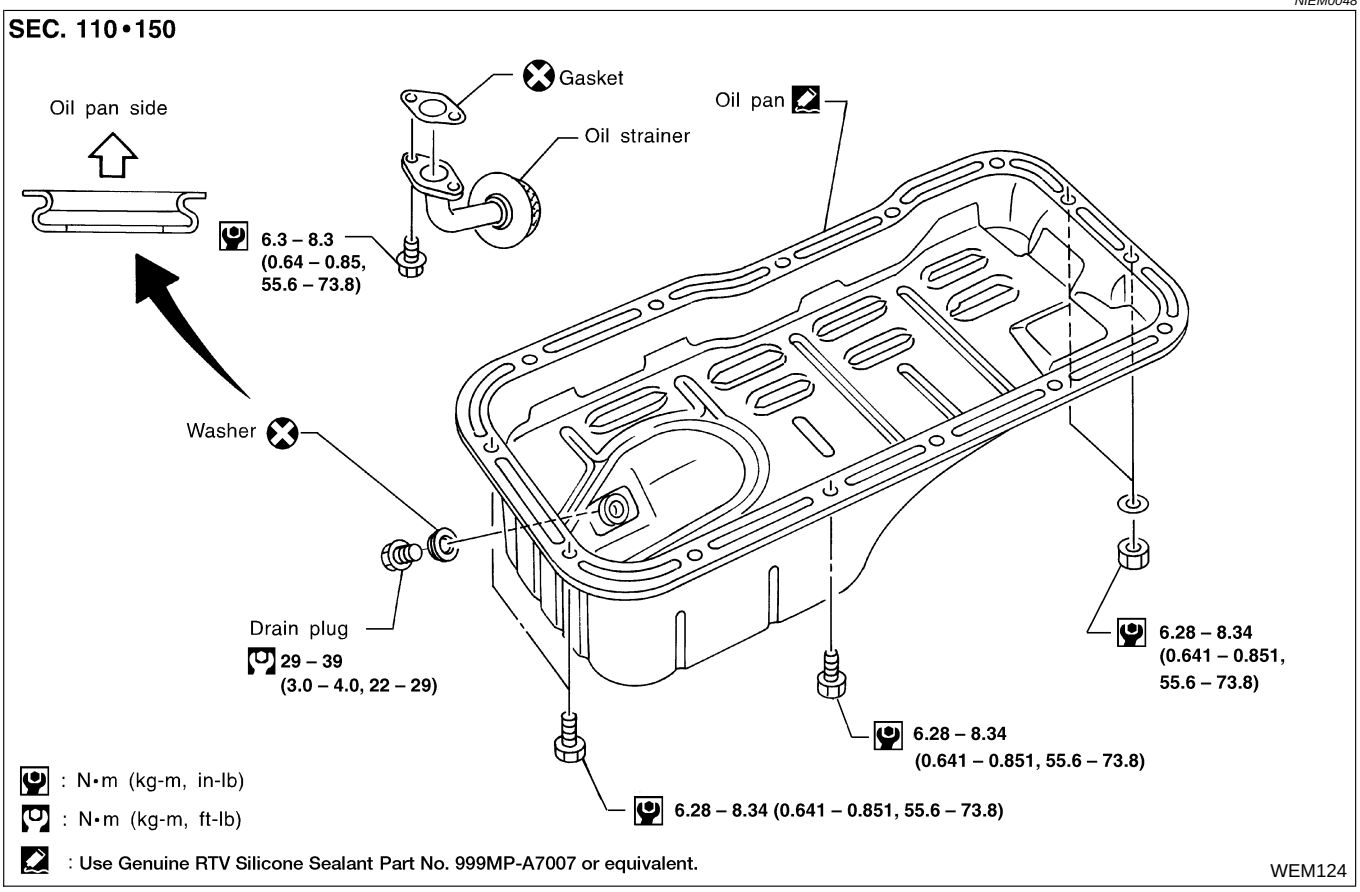

Removal

NIEM0049

1. Remove engine RH side undercover splash shield.
2. Drain engine oil.
3. Remove front exhaust tube.
   Refer to ***FE-15***, “Removal and Installation”.
4. Remove the exhaust manifold support.

Removal (Cont'd)

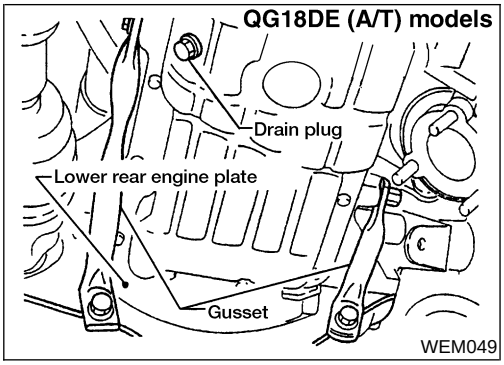

5. Remove the engine gusset.
6. Remove rear plate cover (A/T models).

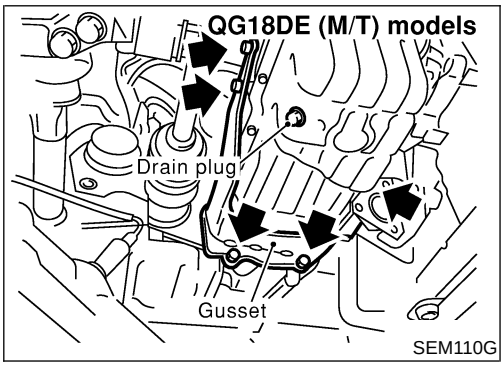

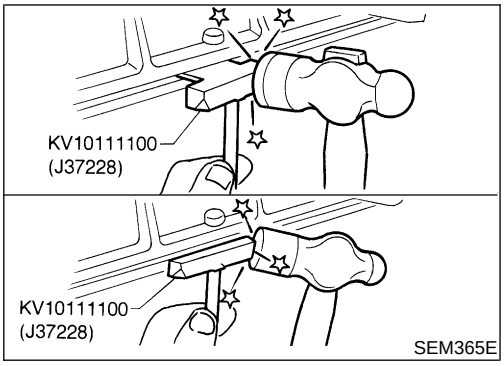

7. Remove oil pan.

a. Insert Tool between cylinder block and oil pan.

- **Be careful not to damage aluminum mating face.**

  Do not insert screwdriver, or oil pan flange will be damaged.

b. Slide Tool by tapping on the side of the Tool with a hammer.

Installation

NIEM0050

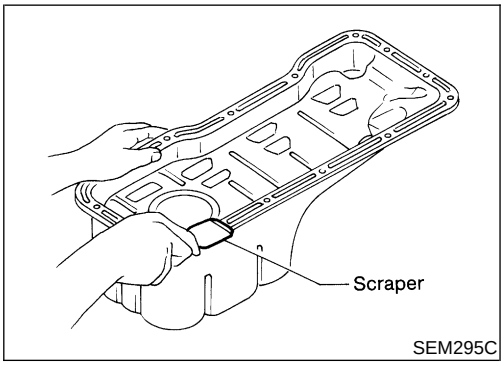

1. Use a scraper to remove old RTV silicone sealant from mating surface of oil pan.

- **Also remove old RTV silicone sealant from mating surface of cylinder block.**

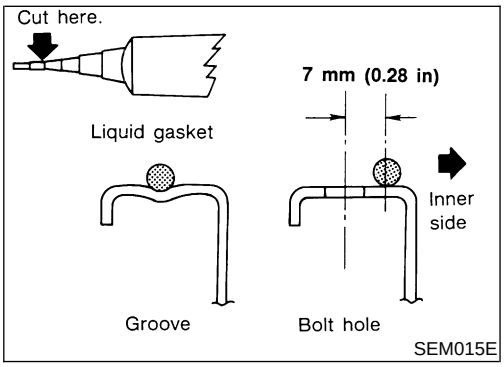

2. Apply a continuous bead of RTV silicone sealant to mating surface of oil pan.

- **Use Genuine RTV silicone sealant Part No. 999MP-A7007 or equivalent.**
- **Apply to groove on mating surface.**
- **Allow 7 mm (0.28 in) clearance around bolt holes.**

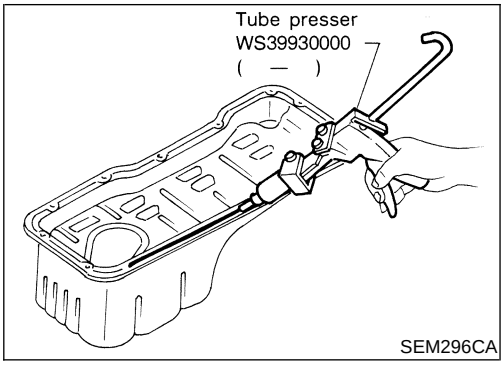

- **Be sure RTV silicone sealant diameter is 3.5 to 4.5 mm (0.138 to 0.177 in).**
- **Attaching should be done within 5 minutes after coating.**

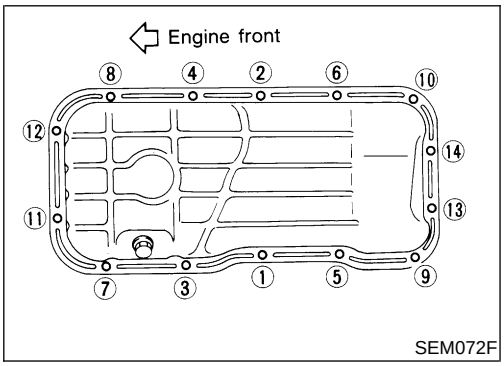

3. Install oil pan.
- **Tighten oil pan nuts and bolts in the numerical order.**
- **Wait at least 30 minutes before refilling engine oil.**
4. Install parts in reverse order of removal.

Components

NIEM0051

SEC. 120•130•135

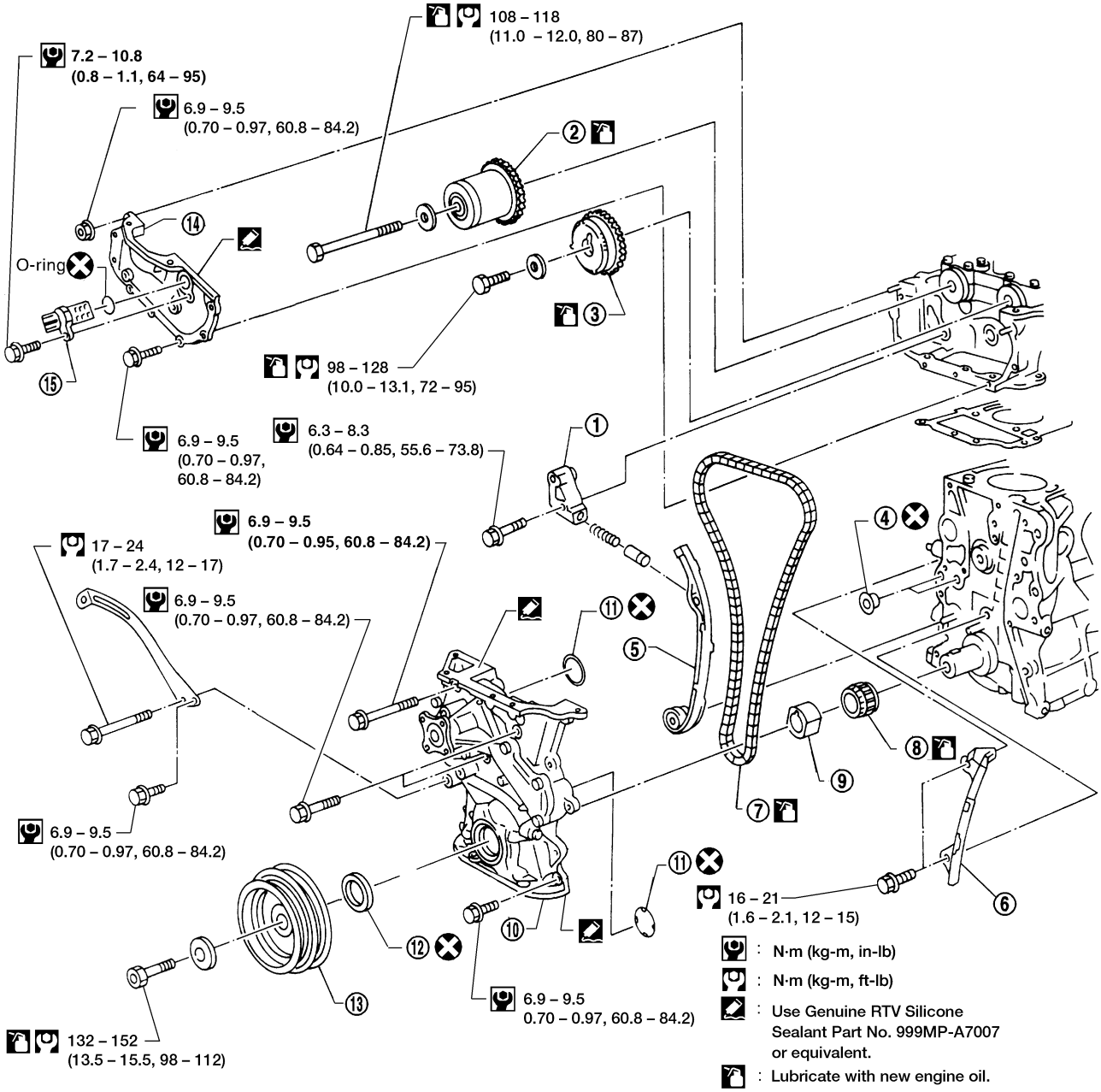

WEM026

1. Chain tensioner
2. Camshaft sprocket (Intake)
3. Camshaft sprocket (Exhaust)
4. O-ring
5. Slack side timing chain guide
6. Timing chain tension guide
7. Timing chain
8. Crankshaft sprocket
9. Oil pump drive spacer
10. Front cover
11. O-ring
12. Oil seal
13. Crankshaft pulley
14. Cylinder head front cover
15. Camshaft position sensor (PHASE)

CAUTION:

- **After removing timing chain, do not turn crankshaft and camshaft separately, or valves will strike piston heads.**
- **When installing chain tensioner, oil seats, or other sliding parts, lubricate contacting surfaces with new engine oil.**
- **Apply new engine oil to bolt threads and seat surfaces when installing camshaft sprocket and crankshaft pulley.**
- **When removing oil pump assembly, remove camshaft position sensor (PHASE), then remove timing chain from engine.**
- **Be careful not to damage sensor edges.**

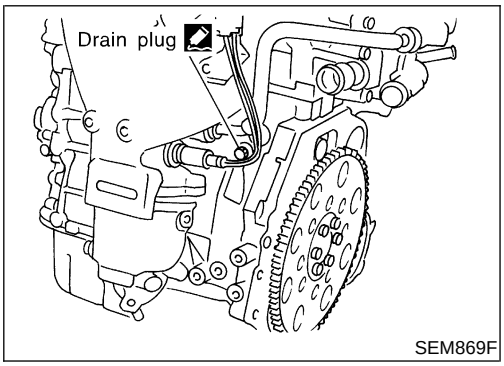

SEM869F

Removal

NIEM0052

1. Drain engine coolant from radiator and cylinder block. Be careful not to spill coolant on drive belts.
2. Remove the following belts.
- Power steering pump drive belt
- Alternator drive belt
3. Remove front RH wheel.
4. Remove front/right-side splash undercover.
5. Remove front exhaust tube.
6. Disconnect vacuum hoses for:
- EVAP canister
- Brake power booster
- Fuel pressure regulator

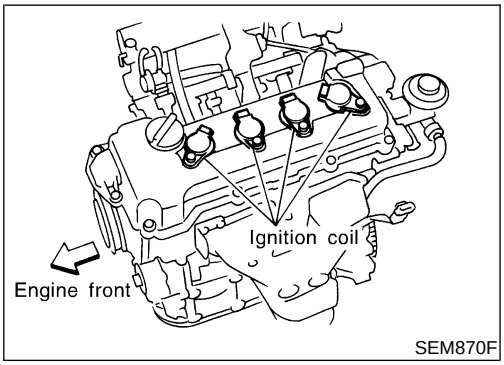

SEM870F

7. Remove ignition coils.
8. Remove spark plugs.

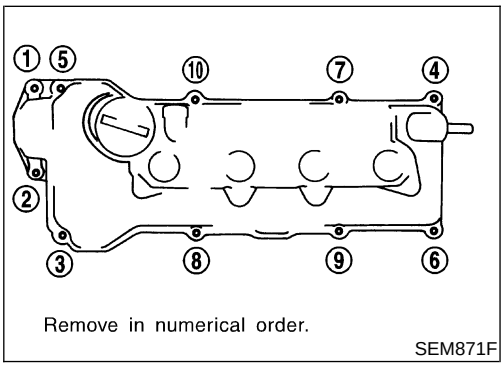

SEM871F

9. Remove rocker cover bolts in numerical order as shown in the figure.

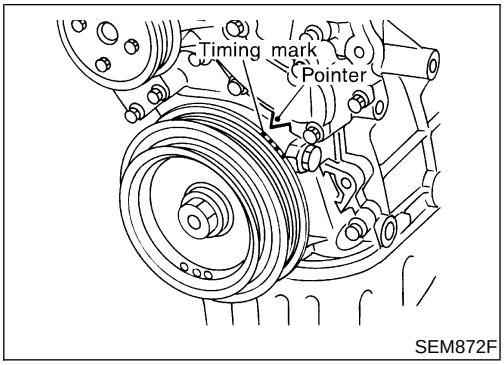

10. Set No. 1 piston at TDC on its compression stroke.

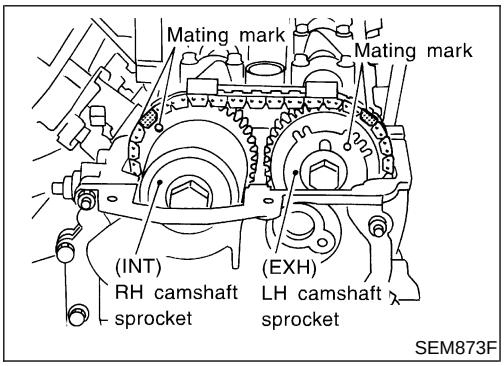

- **Rotate crankshaft until mating mark on camshaft sprocket is set at position indicated in figure at left.**

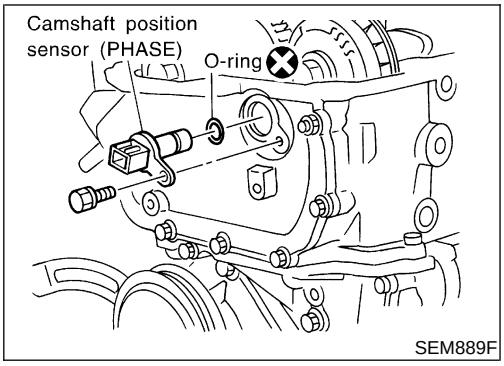

11. Remove camshaft position sensor (PHASE).
- **Do not allow any magnetic materials to contact the camshaft position sensor (PHASE).**
- **Be careful not to damage sensor.**
12. Remove cylinder head front cover.

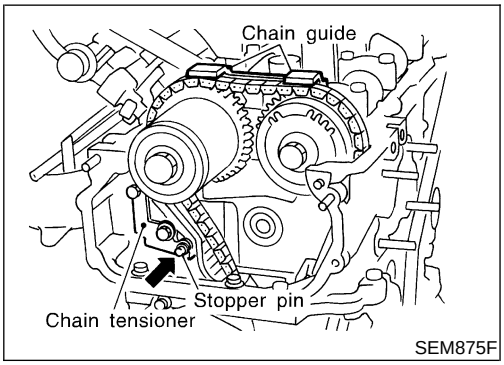

13. Remove timing chain guide from camshaft bracket.
14. Attach a suitable stopper pin to chain tensioner.
15. Remove chain tensioner.

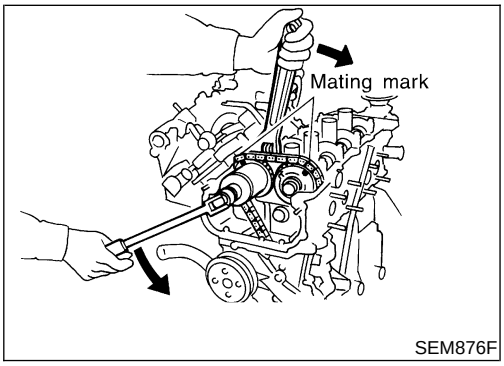

16. Remove camshaft sprocket bolts.
- **Apply paint to timing chain and cam sprockets for alignment during installation.**
17. Remove camshaft sprockets.

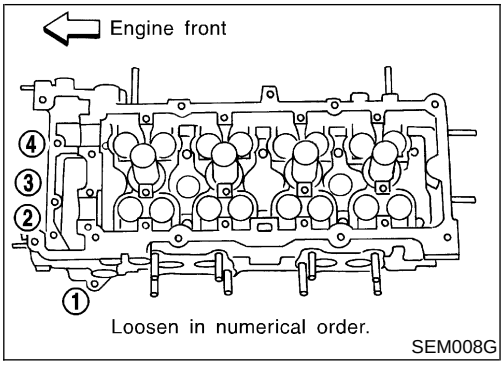

18. Remove cylinder head bolts at engine front side as shown.
19. Remove oil pan. Refer to "Removal", EM-17.

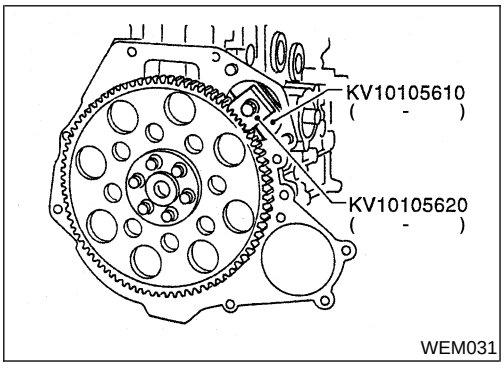

20. Remove starter motor, and set ring gear stopper using mounting bolt holes.

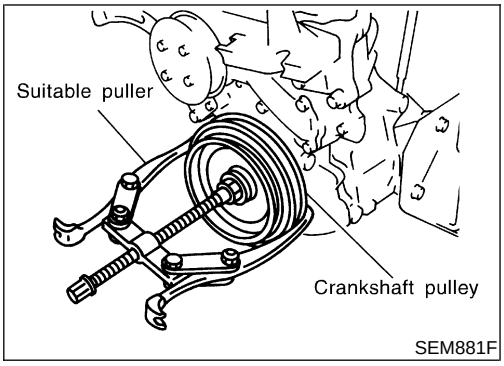

21. Remove crankshaft pulley bolt.
22. Remove crankshaft pulley with a suitable puller.
23. Support engine with a suitable hoist or jack.

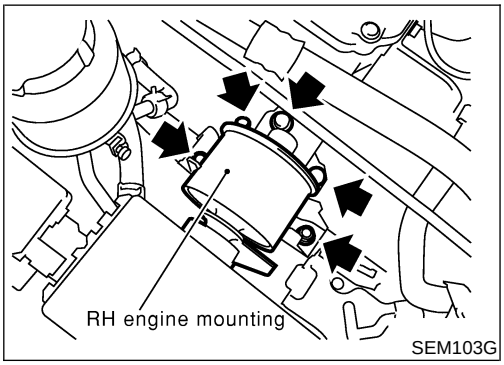

24. Remove RH engine mounting.

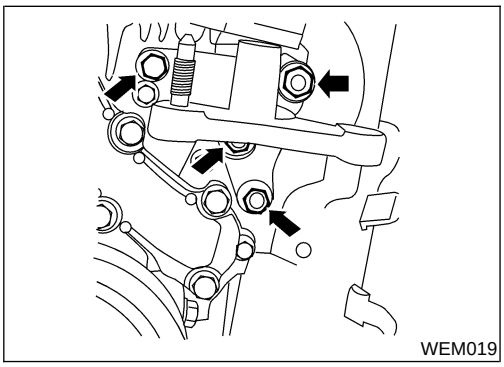

25. Remove RH engine mounting bracket.
26. Remove idler pulley and bracket.

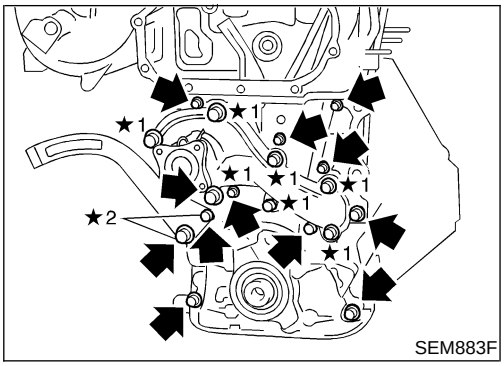

27. Remove water pump pulley and water pump.
28. Remove front cover bolts and front cover as shown.
    ★1: Located on water pump
    ★2: Located on power steering pump adjusting bar, remove the bar
- Inspect for oil leakage at front oil seal. Replace seal if oil leak is present.

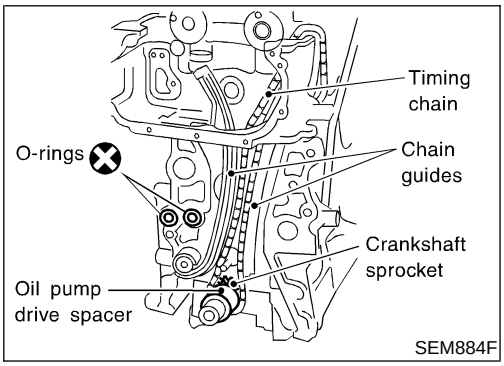

29. Remove timing chain.
30. Remove oil pump drive spacer.
31. Remove chain guides.
32. Remove crankshaft sprocket.

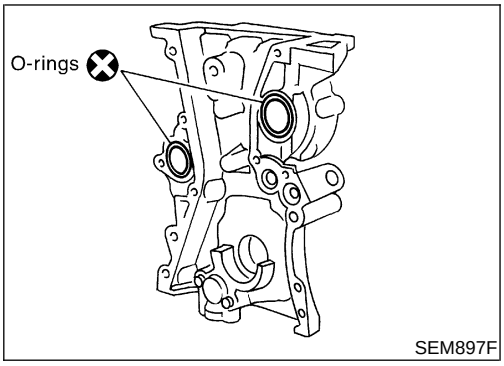

33. Remove O-rings from cylinder block and front cover.

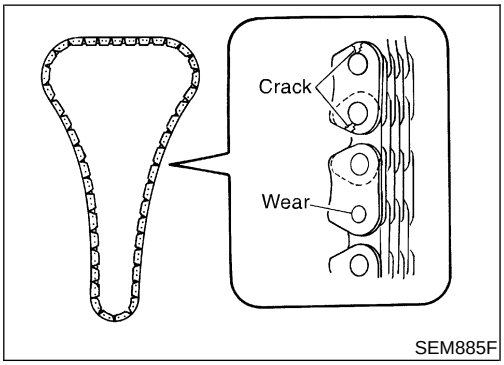

Inspection

NIEM0053

Check for cracks and excessive wear at roller links. Replace if necessary.

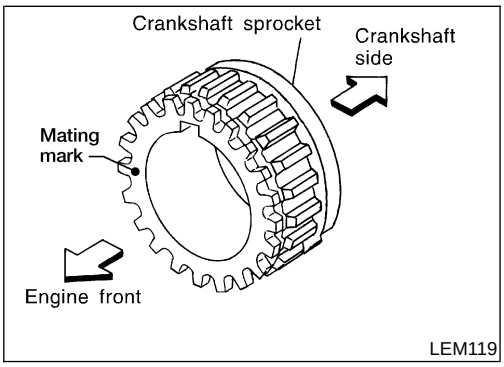

Installation

NIEM0054

1. Install crankshaft sprocket on crankshaft.
- **Make sure mating marks on crankshaft sprocket face front of engine.**

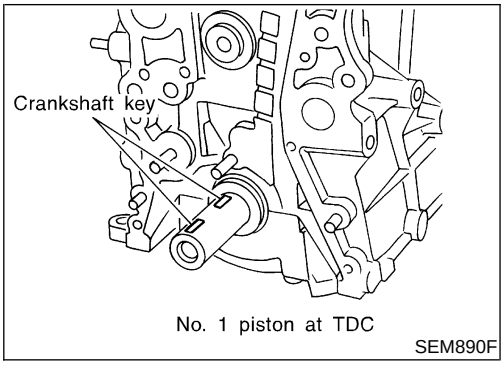

2. Position crankshaft so that No. 1 piston is at TDC and crankshaft key is at 12 o'clock.

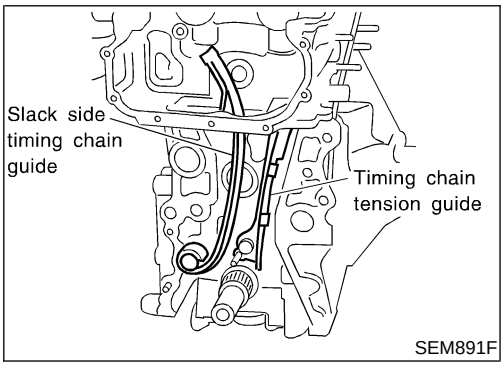

3. Install slack side timing chain guide and timing chain tension guide.

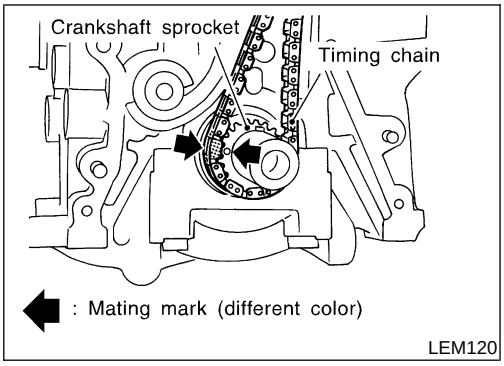

4. Install timing chain on crankshaft sprocket.
- **Set timing chain by aligning its mating mark with that on the crankshaft sprocket.**
- **Make sure sprocket's mating mark faces engine front.**

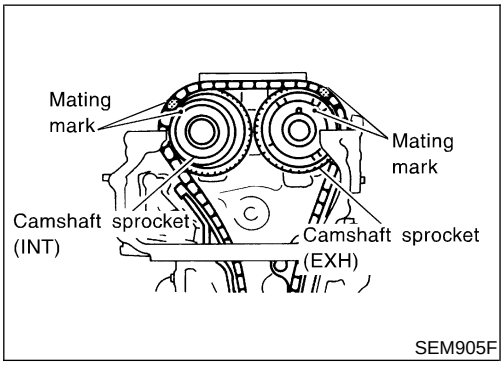

5. Install camshaft sprockets.
- **Set timing chain by aligning mating marks with those of camshaft sprockets.**

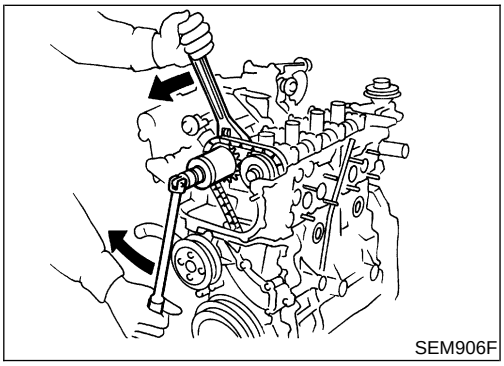

6. Install camshaft sprocket bolts to correct torque.
- **Apply new engine oil to bolt threads and seat surface.**

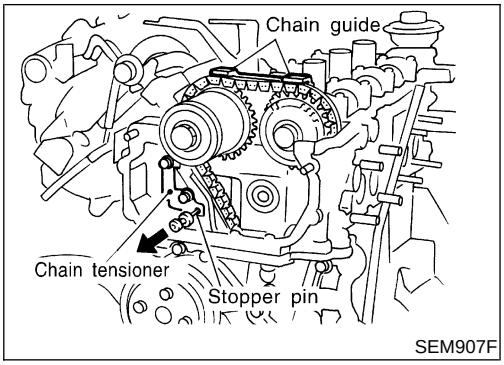

7. Install chain tensioner.
- **Before installing chain tensioner, insert a suitable pin into pin hole of chain tensioner.**
- **After installing chain tensioner, remove the pin.**
8. Install timing chain guide.

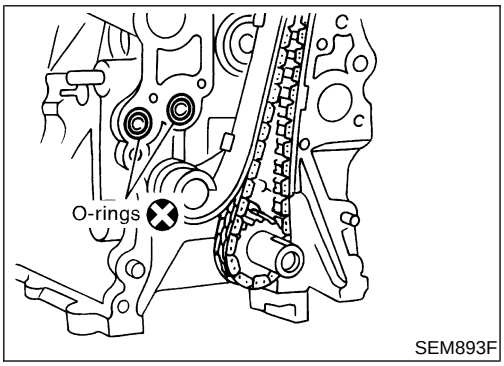

9. Install O-rings to cylinder block.

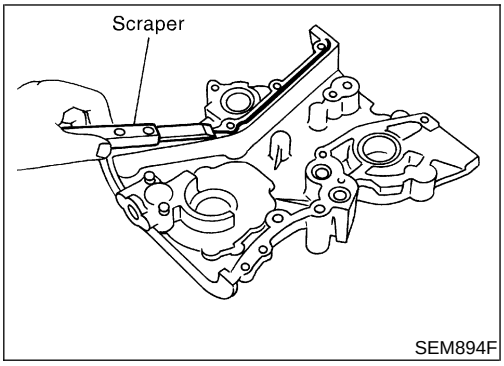

10. Before installing front cover, remove all traces of RTV silicone sealant from mating surface using a scraper.
- Also remove traces of RTV silicone sealant from mating surface of cylinder block.

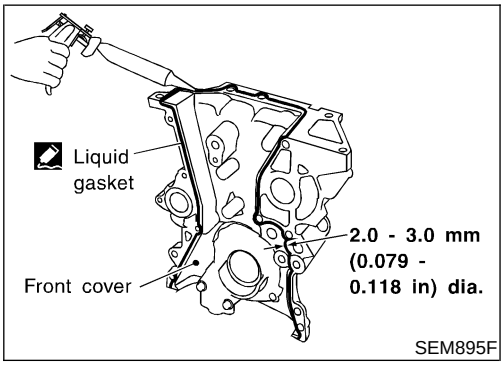

11. Apply a continuous bead of Genuine RTV silicone sealant Part No. 999MP-A7007 or equivalent to mating surface of front cover.
- **Check alignment of mating marks on chain and crankshaft sprocket.**
- **Align oil drive spacer with oil pump.**
- **Place timing chain to the side of chain guide. This prevents the chain from making contact with water seal area of front cover.**

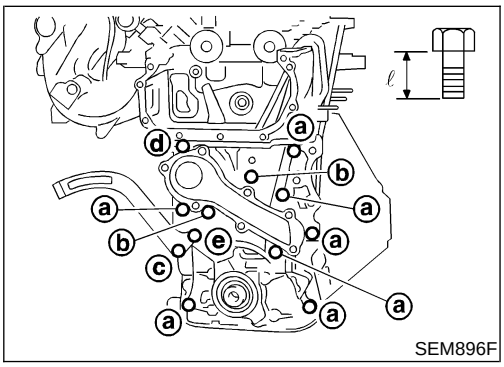

12. Install front cover.

Bolt No.	Tightening torque N·m (kg-m, in-lb)	"ℓ" mm (in)
a	6.9 - 9.5 (0.70 - 0.97, 61 - 84)	20 (0.79)
b	6.9 - 9.5 (0.70 - 0.97, 61 - 84)	40 (1.57)
c	17 - 24 (1.7 - 2.4, 148 - 208*)	70 (2.76)
d	6.9 - 9.5 (0.70 - 0.97, 61 - 84)	72.8 (2.866)
e	6.9 - 9.5 (0.70 - 0.97, 61 - 84)	12 (0.47)

*: 12 - 17 ft-lb

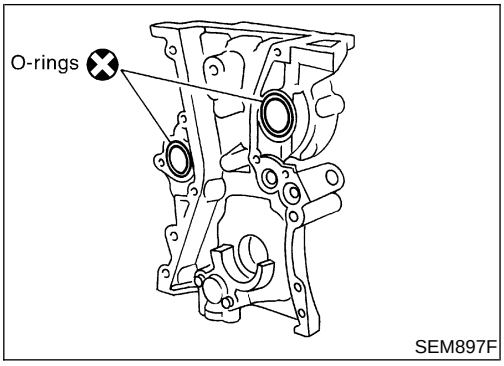

- **Make sure two O-rings are present.**
- **Be careful not to damage oil seal when installing front cover.**

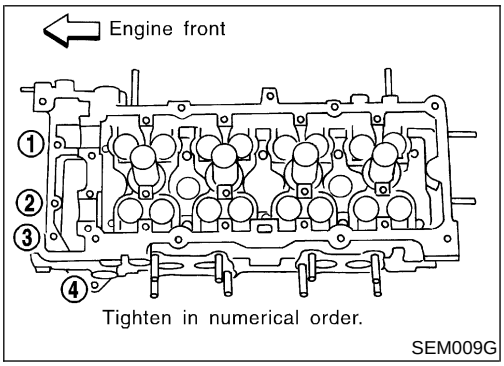

13. Install cylinder head bolts at engine front side as shown.
- **Tightening procedure**
  Tighten bolts (1 - 4) to 6.3 to 8.3 N·m (0.64 to 0.85 kg-m, 55.8 to 73.5 in-lb).

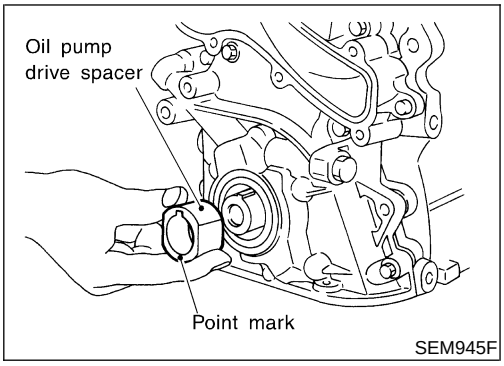

14. Install oil pump drive spacer.
15. Install water pump and water pump pulley.
    Refer to ***LC-12***, "Removal and Installation".
16. Install idler pulley and bracket.

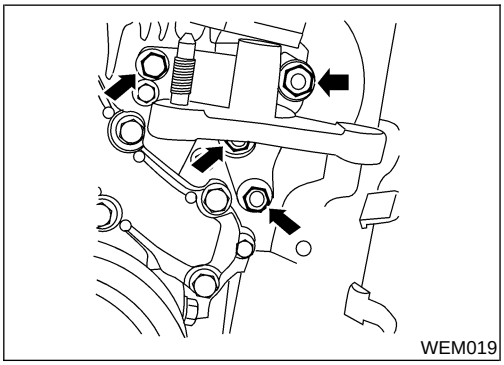

17. Install RH engine mounting bracket.
18. Install RH engine mounting.
19. Install oil pan. Refer to "Installation", EM-18.
20. Install crankshaft pulley.
21. Remove ring gear stopper.
22. Install starter motor.

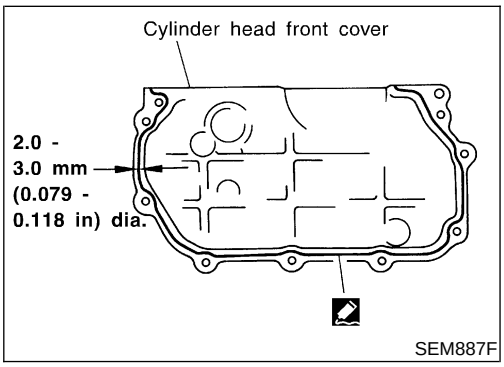

23. Install cylinder head front cover.
- Apply RTV silicone sealant to cylinder head front cover.
- Use Genuine RTV silicone sealant Part No. 999MP-A7007 or equivalent.

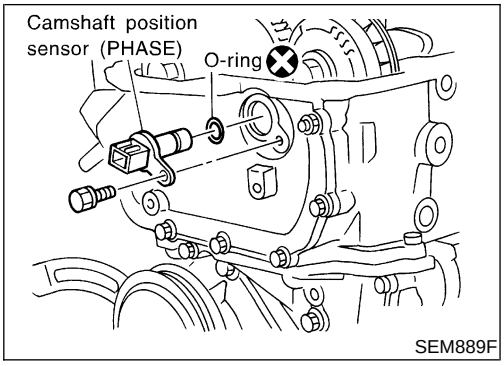

24. Install camshaft position sensor (PHASE).

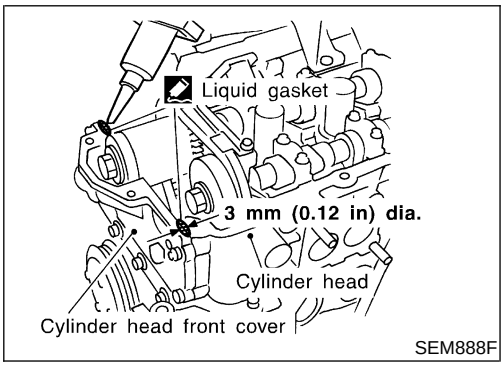

25. Before installing rocker cover, apply a bead of Genuine RTV silicone sealant Part No. 999MP-A7007 to mating surface of cylinder head as shown.
26. Install rocker cover gasket into rocker cover.

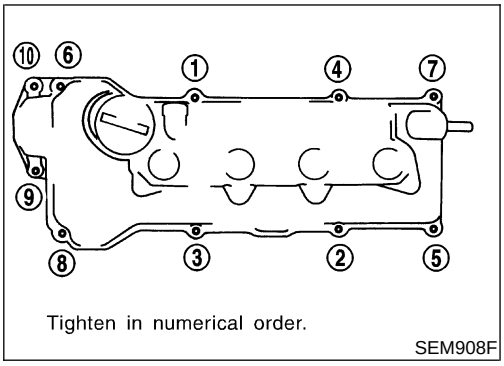

27. Install rocker cover and tighten in numerical order as shown in the figure.
28. Install spark plugs.
29. Install ignition coils.
30. Install front exhaust tube.
31. Install front/right-side splash undercover.
32. Install front RH wheel.
33. Install drive belts.
    For adjusting drive belt deflection, refer to ***MA-16***, "Checking Drive Belts".
34. Reinstall parts in reverse order of removal.

Replacement

NIEM0055

VALVE OIL SEAL

NIEM0055S01

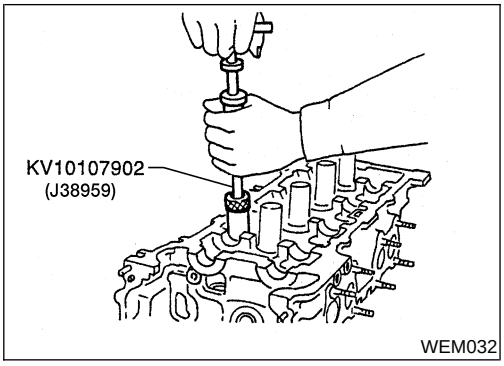

WEM032

1. Remove rocker cover.
2. Remove camshaft.
3. Remove valve spring. Refer to “Components”, EM-31.
4. Remove valve oil seal with Tool.

Piston concerned should be set at TDC to prevent valve from falling.

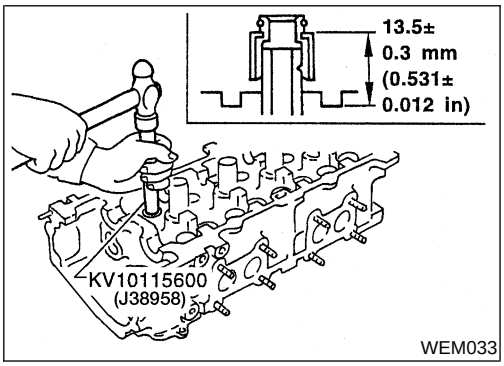

WEM033

5. Apply new engine oil to new valve oil seal and install it with Tool.

FRONT OIL SEAL

NIEM0055S02

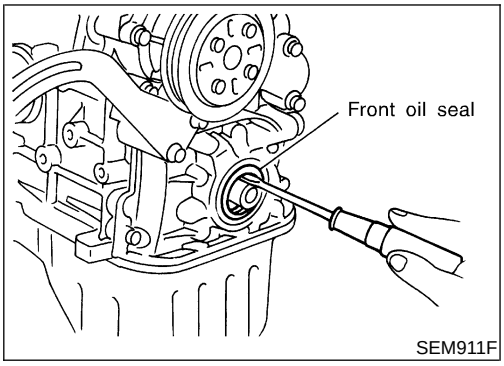

SEM911F

1. Remove the following parts:
- Engine under cover
- RH engine side cover
- Generator and power steering drive belts
- Crankshaft pulley
2. Remove front oil seal from front cover.
- **Be careful not to scratch front cover.**

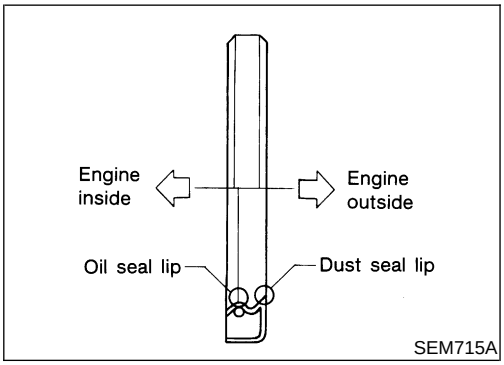

SEM715A

3. Apply new engine oil to new oil seal and install it using a suitable tool.
- Install new oil seal in the direction shown.

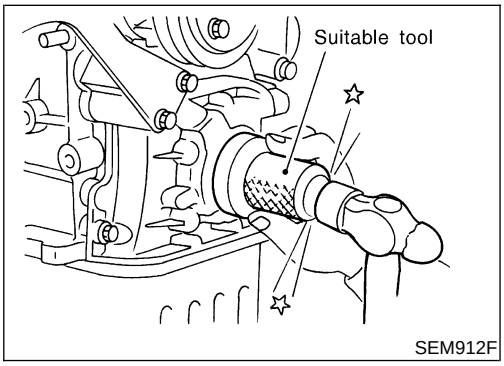

SEM912F

REAR OIL SEAL

=NIEM0055S03

1. Remove transaxle. Refer to ***MT-12***, "Removal" or ***AT-274***, "Removal".
2. Remove flywheel or drive plate.

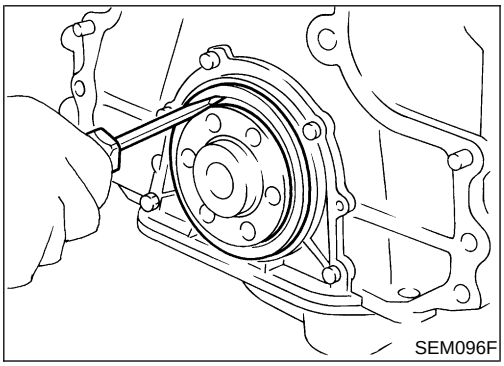

3. Remove rear oil seal.
- **Be careful not to scratch rear oil seal retainer.**

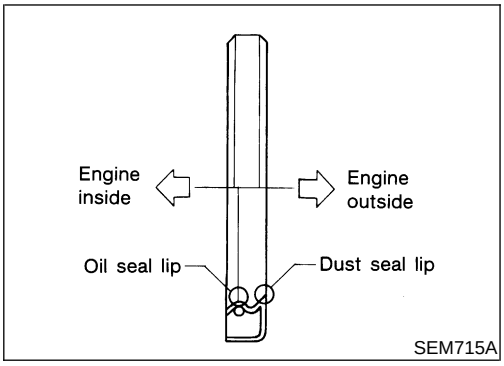

4. Apply new engine oil to new oil seal and install it using a suitable tool.
- Install new oil seal in the direction shown.

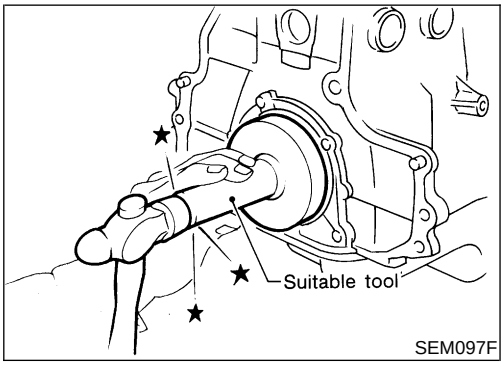

Components

NIEM0056

SEC. 111•130

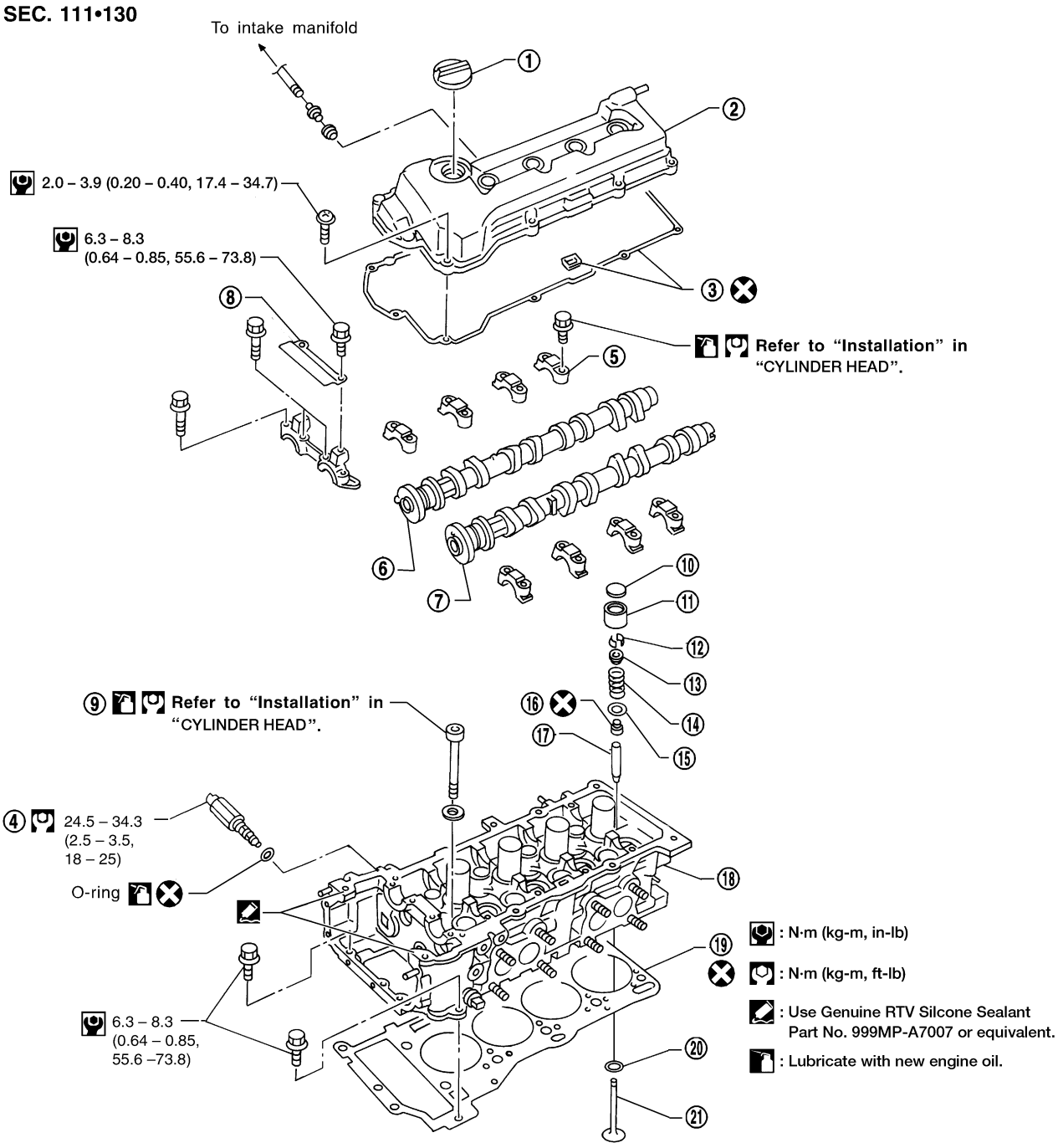

1. Oil filler cap
2. Rocker cover
3. Rocker cover gasket
4. Intake valve timing control solenoid
5. Camshaft bracket
6. Intake camshaft
7. Exhaust camshaft
8. Timing chain guide
9. Cylinder head bolt
10. Shim
11. Valve lifter
12. Valve cotter
13. Valve spring retainer
14. Valve spring
15. Valve spring seat
16. Valve oil seal
17. Valve guide
18. Cylinder head
19. Cylinder head gasket
20. Valve seat
21. Valve

CAUTION:

- **When installing camshaft and oil seal, lubricate contacting surfaces with new engine oil.**
- **When tightening cylinder head bolts, camshaft sprocket bolts and camshaft bracket bolts, lubricate bolt threads and seat surfaces with new engine oil.**
- **Attach tags to valve lifters so as not to mix them up.**

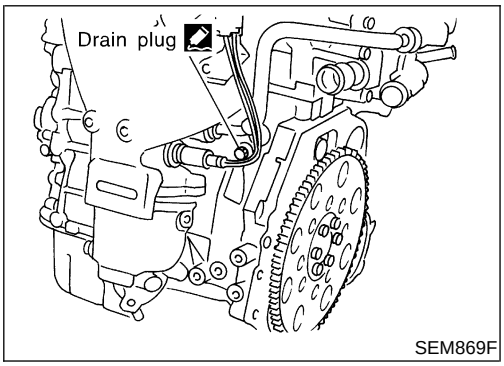

Removal

NIEM0057

1. Drain engine coolant from radiator and cylinder block.
   Be careful not to spill coolant on drive belts.
2. Release fuel pressure.
   Refer to ***EC-67*** [QG18DE (except Calif. CA Model)], or ***EC-743*** [QG18DE (Calif. CA Model)], "Fuel Pressure Release".
3. Remove air duct to intake manifold collector.
4. Remove engine drive belts.
5. Remove front splash undercovers.
6. Remove front exhaust tube.
7. Before removing intake manifold collector from engine, the following parts should be disconnected to remove intake manifold collector:

- EGR tube
- Fuel injector connectors
- Ground harness
- Breather pipe

Harness connectors for:

- IACV-AAC valve
- Throttle position sensor
- Throttle position switch
- EGR temperature sensor
- Water hoses from collector
- Heater hoses
- PCV hose

Vacuum hoses for:

- EVAP canister
- Power brake booster
- Fuel pressure regulator

8. Remove intake manifold rear supports.
9. Remove exhaust manifold.

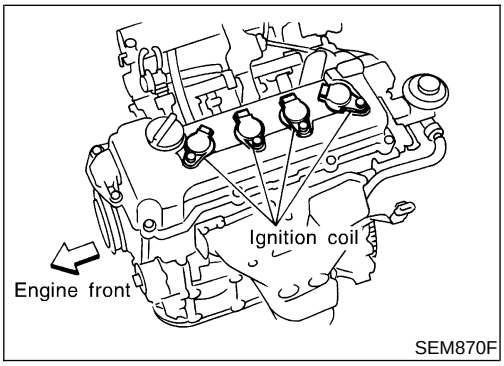

10. Remove ignition coils.
11. Remove spark plugs.

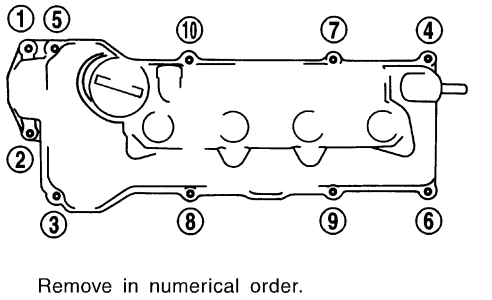

SEM871F

12. Remove rocker cover bolts in numerical order as shown in the figure.

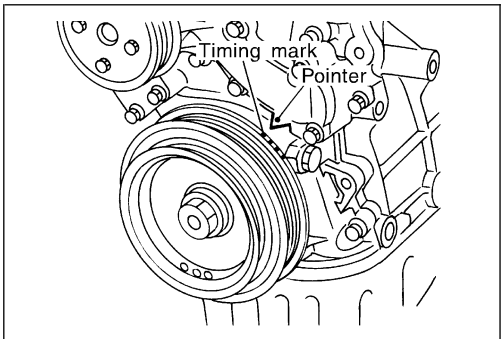

SEM872F

13. Set No. 1 piston at TDC on its compression stroke.

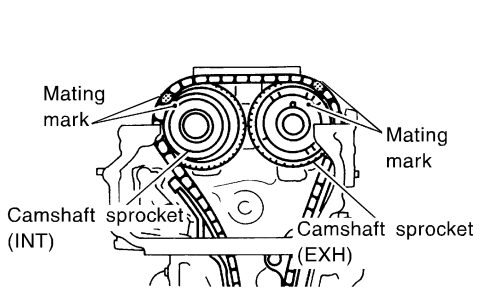

SEM905F

- Rotate crankshaft until mating mark on camshaft sprocket is set at position indicated in figure at left.

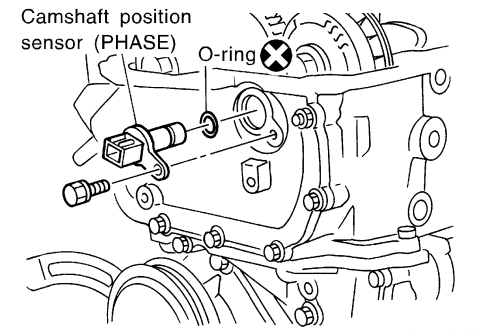

SEM889F

14. Remove camshaft position sensor (PHASE).
- **Do not allow any magnetic materials to contact the camshaft position sensor (PHASE).**
- **Be careful not to damage sensor.**
15. Remove intake valve timing control solenoid.
16. Remove cylinder head front cover.

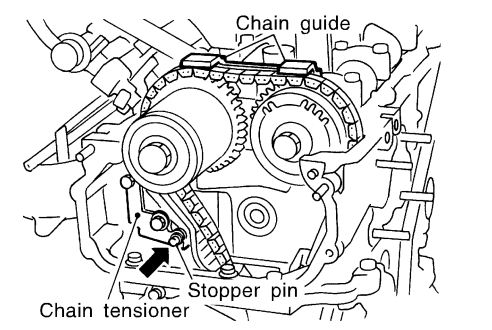

SEM875F

17. Remove timing chain guide from camshaft bracket.
18. Attach a suitable stopper pin to chain tensioner.
19. Remove chain tensioner.

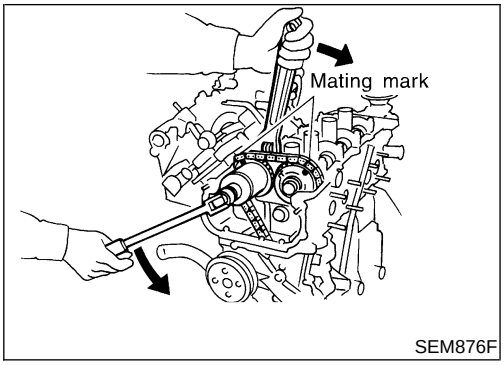

20. Remove camshaft sprocket bolts.
- **Apply paint to timing chain and cam sprockets for alignment during installation.**
21. Remove camshaft sprockets.

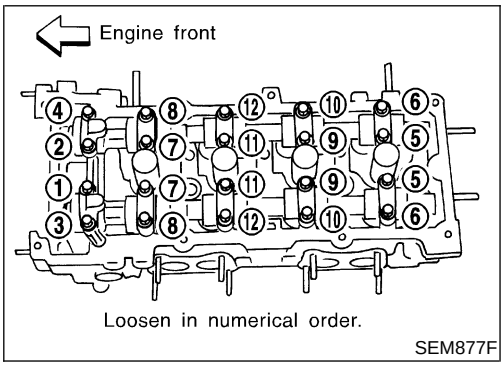

22. Remove camshaft brackets and camshafts.
- **Apply I.D. marks to brackets to ensure correct reassembly.**
- **Bolts should be loosened in two or three steps.**

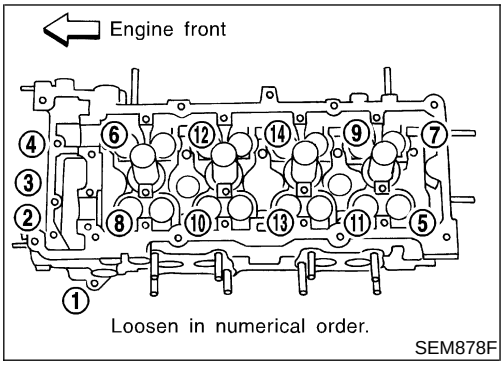

23. Remove cylinder head bolts.
24. Remove cylinder head with intake manifold.
- **Head warpage or cracking could result from removing in incorrect order.**
- **Cylinder head bolts should be loosened in two or three steps.**

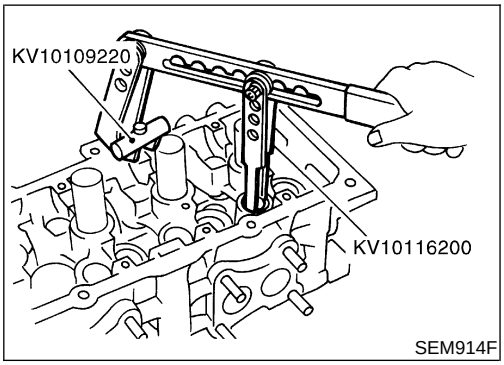

Disassembly

NIEM0058

1. Remove valve components with Tool.
2. Remove valve oil seal with a suitable tool.

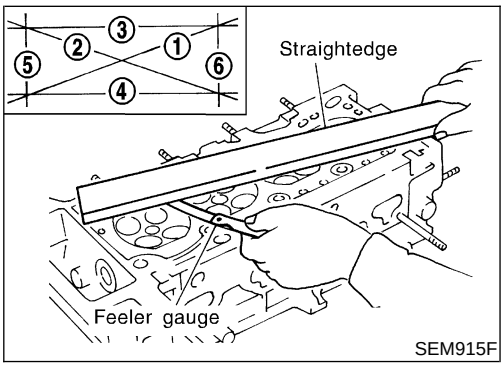

Inspection

NIEM0059

CYLINDER HEAD DISTORTION

NIEM0059S01

- Clean surface of cylinder head.
- Use a reliable straightedge and feeler gauge to check the flatness of cylinder head mating surface.
- Check along six positions shown in figure.

Head surface flatness:

Standard: Less than 0.03 mm (0.0012 in)

Limit: 0.1 mm (0.004 in)

If beyond the specified limit, replace or resurface it.

Resurfacing limit:

The limit for cylinder head resurfacing is determined by the amount of cylinder block resurfacing.

Amount of cylinder head resurfacing is "A".

Amount of cylinder block resurfacing is "B".

The maximum limit is as follows:

A + B = 0.2 mm (0.008 in)

After resurfacing cylinder head, check that camshaft rotates freely by hand. If resistance is felt, replace cylinder head.

Nominal cylinder head height:

117.8 - 118.0 mm (4.638 - 4.646 in)

CAMSHAFT VISUAL CHECK

NIEM0059S02

Check camshaft for scratches, seizure and wear.

CAMSHAFT RUNOUT

NIEM0059S03

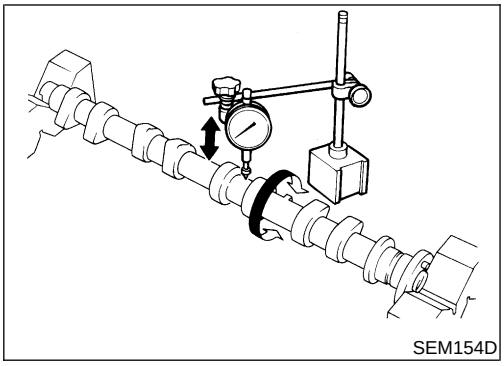
SEM154D

1. Measure camshaft runout at the center journal.

Runout (Total indicator reading):

Standard

Less than 0.02 mm (0.0008 in)

Limit

0.1 mm (0.004 in)

2. If it exceeds the limit, replace camshaft.

CAMSHAFT CAM HEIGHT

NIEM0059S04

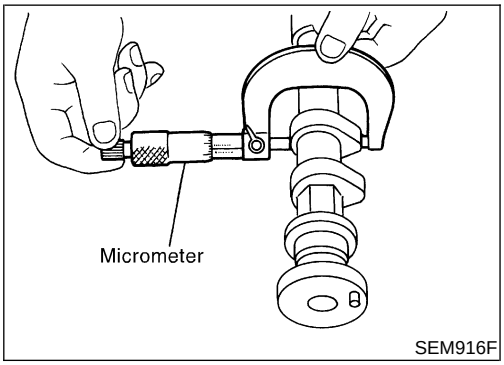

SEM916F

1. Measure camshaft cam height.

Standard cam height:

Intake:

40.565 - 40.755 mm (1.5970 - 1.6045 in)

Exhaust:

40.056 - 40.246 mm (1.5770 - 1.5845 in)

Cam wear limit:

0.20 mm (0.0079 in)

2. If wear is beyond the limit, replace camshaft.

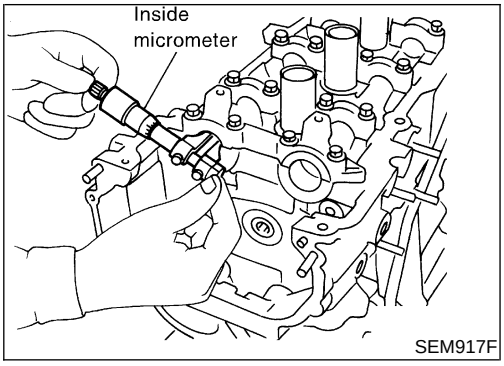

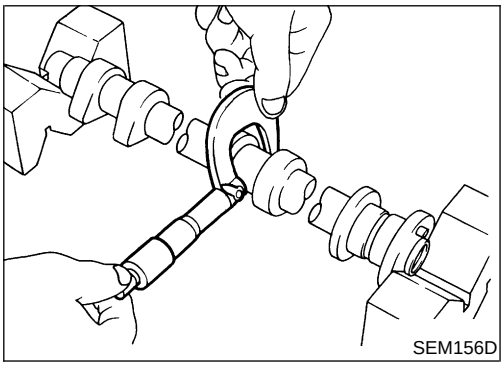

CAMSHAFT JOURNAL CLEARANCE

=NIEM0059S05

1. Install camshaft bracket and tighten bolts to the specified torque.
2. Measure inner diameter of camshaft bearing.
   Standard inner diameter:
   No. 1 bearing
   28.000 - 28.021 mm (1.1024 - 1.1032 in)
   No. 2 to No. 5 bearings
   Intake: 23.985 – 24.006 mm (0.9443 – 0.9451 in)
   Exhaust: 24.000 - 24.021 mm (0.9449 - 0.9457 in)
3. Measure outer diameter of camshaft journal.
   Standard outer diameter:
   No. 1 journal
   27.935 - 27.955 mm (1.0998 - 1.1006 in)
   No. 2 to No. 5 journals
   23.935 - 23.955 mm (0.9423 - 0.9431 in)
4. If clearance exceeds the limit, replace camshaft and/or cylinder head.
   Camshaft journal clearance:
   Standard
   Intake: 0.030 - 0.071 mm (0.0012 - 0.0028 in)
   Exhaust: 0.045 - 0.086 mm (0.0018 - 0.0034 in)
   Limit
   Intake: 0.135 mm (0.0053 in)
   Exhaust: 0.150 mm (0.0059 in)

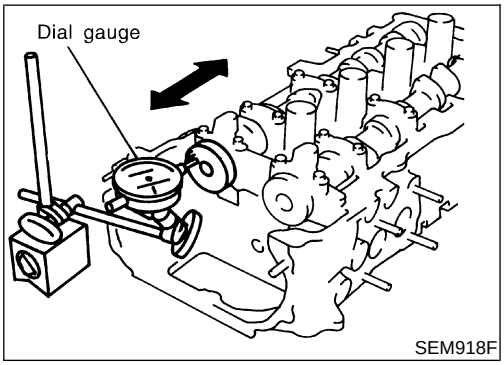

CAMSHAFT END PLAY

NIEM0059S06

1. Install camshaft in cylinder head. Refer to "Inspection", EM-24.
2. Measure camshaft end play.
   Camshaft end play:
   Standard
   0.115 - 0.188 mm (0.0045 - 0.0074 in)
   Limit
   0.20 mm (0.0079 in)
3. If limit is exceeded, replace camshaft and remeasure end play.

- **If limit is still exceeded after replacing camshaft, replace cylinder head.**

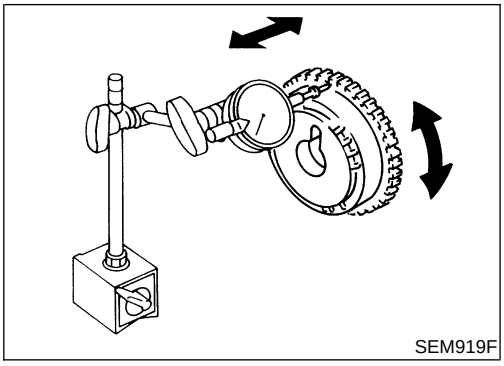
SEM919F

CAMSHAFT SPROCKET RUNOUT

NIEM0059S07

1. Install sprocket on camshaft.
2. Measure camshaft sprocket runout.

   Runout (Total indicator reading):
   Limit 0.15 mm (0.0059 in)
3. If it exceeds the limit, replace camshaft sprocket.

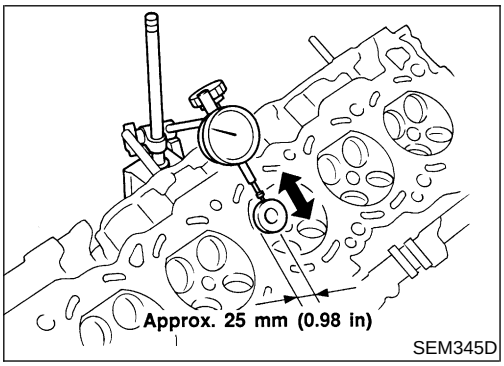

SEM345D

VALVE GUIDE CLEARANCE

NIEM0059S08

1. Measure valve deflection as shown in figure. (Valve and valve guide wear the most in this direction.)

   Valve deflection limit (Dial gauge reading):
   Intake & Exhaust
   0.2 mm (0.008 in)

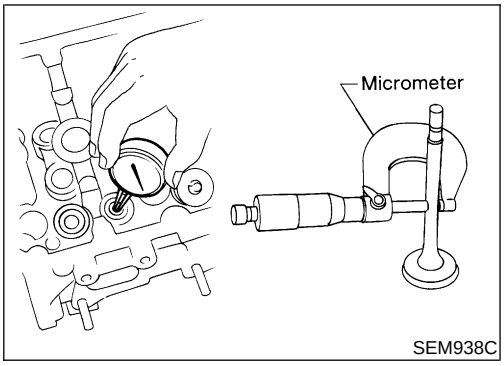

SEM938C

2. If it exceeds the limit, check valve to valve guide clearance.

a. Measure valve stem diameter and valve guide inner diameter.
b. Calculate valve to valve guide clearance.
   Valve stem to valve guide clearance = valve guide inner diameter − valve stem diameter.
c. Check that clearance is within specification.

Unit: mm (in)

	Standard	Limit
Intake	0.020 - 0.050 (0.0008 - 0.0020)	0.1 (0.004)
Exhaust	0.040 - 0.070 (0.0016 - 0.0028)	0.1 (0.004)

- If it exceeds the limit, replace valve and remeasure clearance.
- **If limit is still exceeded after replacing valve, replace valve guide.**

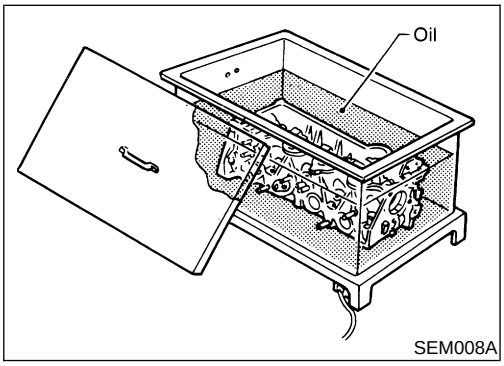

SEM008A

VALVE GUIDE REPLACEMENT

NIEM0059S09

1. To remove valve guide, heat cylinder head to 110 to 130°C (230 to 266°F).

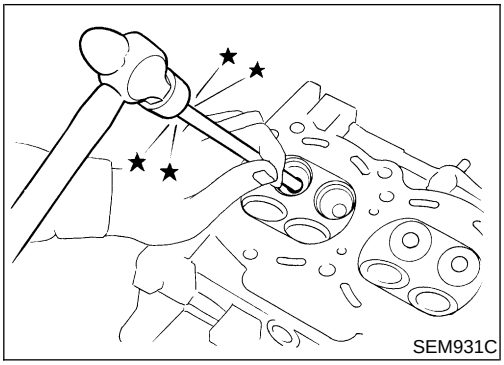
SEM931C

2. Drive out valve guide with a press [under a 20 kN (2 ton, 2.2 US ton, 2.0 Imp ton) pressure] or hammer and suitable tool.

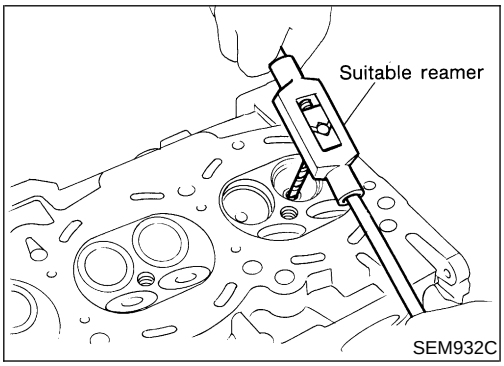

SEM932C

3. Ream cylinder head valve guide hole.

   Valve guide hole diameter
   (for service parts):
   Intake & Exhaust
   9.685 - 9.696 mm (0.3813 - 0.3817 in)

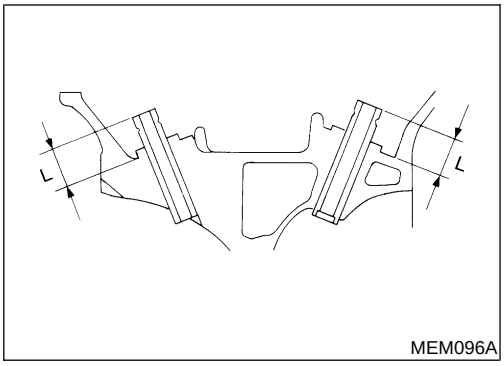

MEM096A

4. Heat cylinder head to 110 to 130°C (230 to 266°F) and press service valve guide into cylinder head.

   Projection "L":
   11.5 - 11.7 mm (0.453 - 0.461 in)

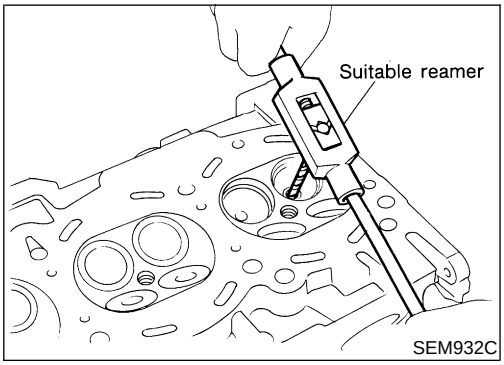

SEM932C

5. Ream valve guide.

   Finished size:
   Intake & Exhaust
   5.500 - 5.515 mm (0.2165 - 0.2171 in)

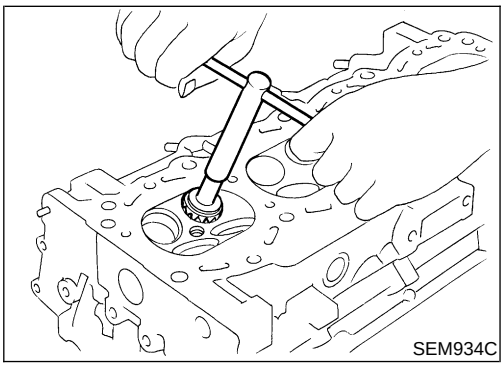
SEM934C

VALVE SEATS

NIEM0059S10

Check valve seats for pitting at contact surface. Resurface or replace if excessively worn.

- **Before repairing valve seats, check valve and valve guide for wear. If they have worn, replace them. Then correct valve seat.**
- **Use both hands to cut uniformly.**

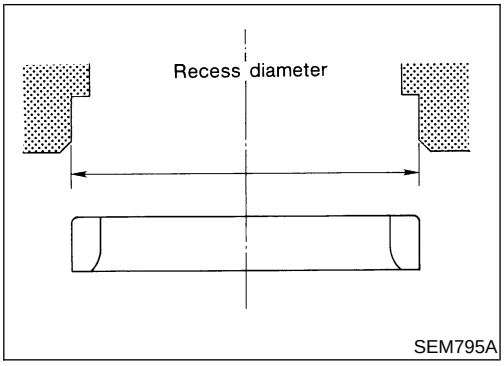

SEM795A

REPLACING VALVE SEAT FOR SERVICE PARTS

NIEM0059S11

1. Bore out old seat until it collapses. Set machine depth stop so that boring cannot contact the bottom face of seat recess in cylinder head.
2. Ream cylinder head recess.

   Reaming bore for service valve seat
   Oversize [0.5 mm (0.020 in)]:
   Intake
   31.500 - 31.516 mm (1.2402 - 1.2408 in)
   Exhaust
   26.500 - 26.516 mm (1.0433 - 1.0439 in)

Use the valve guide center for reaming to ensure valve seat will have the correct fit.

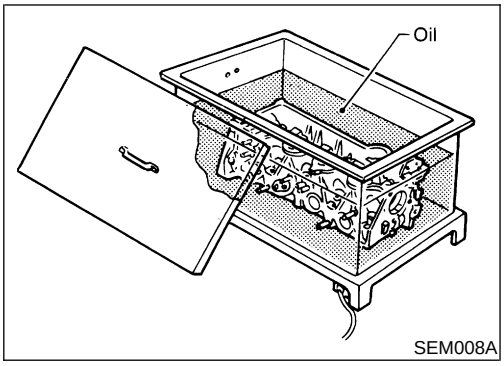

SEM008A

3. Heat cylinder head to 110 to 130°C (230 to 266°F).
4. Press fit valve seat until it seats on the bottom.
5. Cut or grind valve seat using suitable tool to the specified dimensions as shown in "VALVE SEAT", EM-71.
6. After cutting, lap valve seat with abrasive compound.

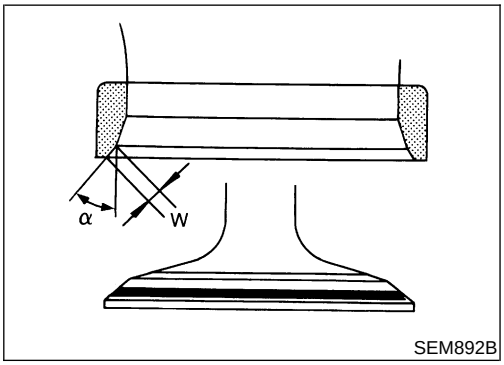

SEM892B

7. Check valve seating condition.

   Seat face angle "α":
   44°53′ - 45°07′
   Contacting width "W":
   Intake
   1.06 - 1.34 mm (0.0417 - 0.0528 in)
   Exhaust
   1.34 - 1.63 mm (0.0528 - 0.0642 in)

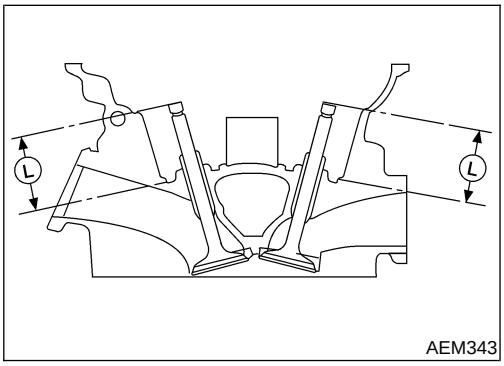

AEM343

8. Use a depth gauge to measure the distance "L" between the mounting surface of the cylinder head spring seat and the valve stem end. If the distance is shorter than specified, repeat step 5 above to correct it. If the distance is longer, replace the valve seat.

   Valve seat resurface limit:
   Intake
   35.95 - 36.55 mm (1.4154 - 1.4390 in)
   Exhaust
   35.92 - 36.52 mm (1.4142 - 1.4378 in)

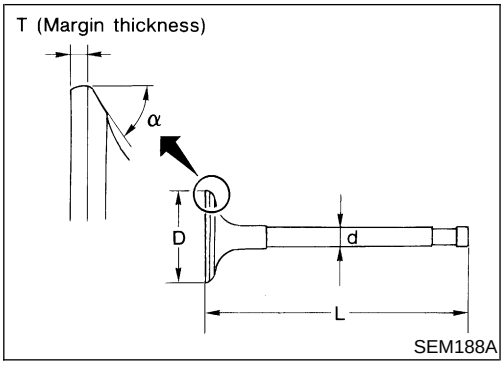

SEM188A

VALVE DIMENSIONS

NIEM0059S12

Check dimensions of each valve. Refer to "VALVE", EM-67 for dimensions.

When valve head has been worn down to 0.5 mm (0.020 in) in margin thickness, replace valve.

Grinding allowance for valve stem tip is 0.2 mm (0.008 in) or less.

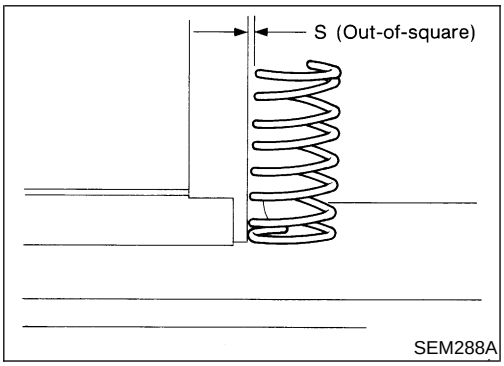

SEM288A

VALVE SPRING

NIEM0059S13

Squareness

NIEM0059S1301

1. Measure dimension "S".

   Out-of-square "S":

   Less than 1.75 mm (0.0689 in)

2. If it exceeds the limit, replace spring.

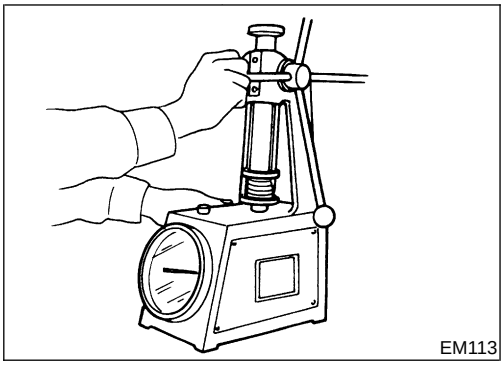
EM113

Pressure

NIEM0059S1302

Check valve spring pressure at specified spring height.

Pressure:

Standard

370.0 N (37.73 kg, 83.19 lb) at 23.64 mm (0.9307 in)

Limit

More than 347.8 N (35.46 kg, 78.19 lb) at 23.64 mm (0.9307 in)

If not within specification, replace spring.

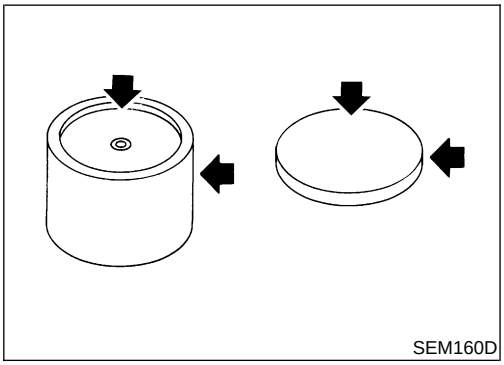
SEM160D

VALVE LIFTER AND VALVE SHIM

NIEM0059S14

1. Check contact and sliding surfaces for wear or scratches.

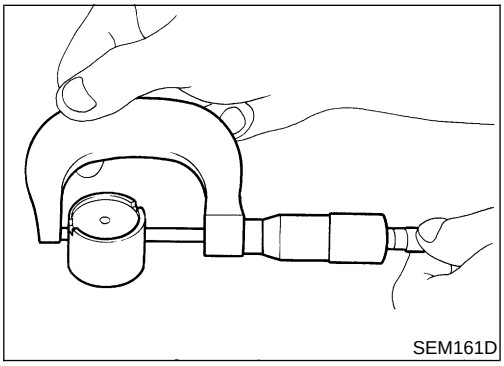
SEM161D

2. Check diameter of valve lifter and valve lifter guide bore.

   Valve lifter outside diameter:

   29.960 - 29.975 mm (1.1795 - 1.1801 in)

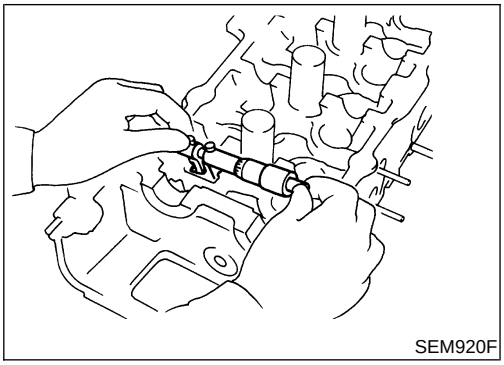
SEM920F

Lifter guide inside diameter:
30.000 - 30.021 mm (1.1811 - 1.1819 in)
Clearance between valve lifter and valve lifter guide:
0.025 - 0.065 mm (0.0010 - 0.0026 in)

If it exceeds the limit, replace valve lifter or cylinder head which exceeds the standard diameter tolerance.

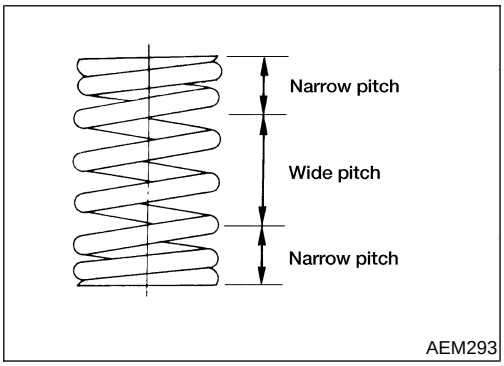

AEM293

Assembly

NIEM0061

1. Install valve component parts.

- **Always use new valve oil seal. Refer to "VALVE OIL SEAL", EM-29.**
- **Before installing valve oil seal, install valve spring seat.**
- **After installing valve components, tap valve stem tip with a plastic hammer to assure a proper fit.**
- **Install valve spring (narrow pitch at both ends of spring) with either end toward cylinder head.**

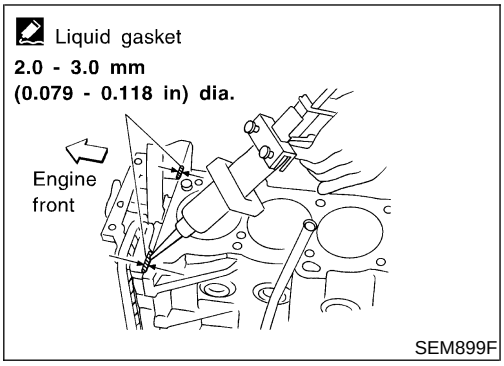

SEM899F

Installation

NIEM0062

1. Before installing cylinder head gasket, apply a bead of Genuine RTV silicone sealant Part No. 999MP-A7007 or equivalent to mating surface of cylinder block as shown.
2. Install cylinder head gasket.

- **When installing cylinder head with manifolds, use a new cylinder head gasket.**

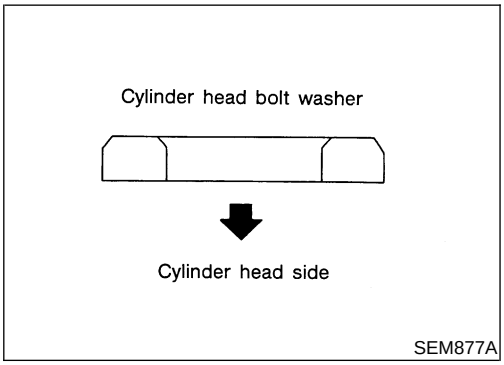

SEM877A

3. Install cylinder head with intake manifolds.

- **Be sure to install washers between bolts and cylinder head.**
- **Do not rotate crankshaft and camshaft separately, or valves will strike piston heads.**
- **Apply new engine oil to cylinder head bolt threads and seat surfaces.**

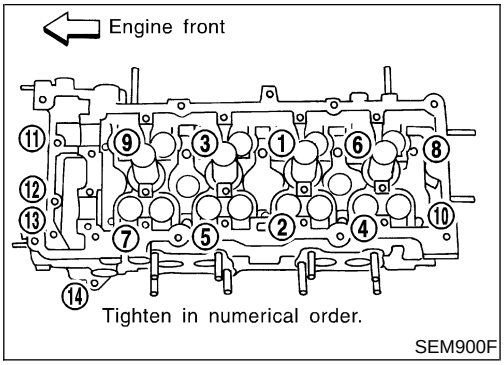

- **Tightening procedure**

a) **Tighten bolts to 29 N·m (3 kg-m, 22 ft-lb).**
b) **Tighten bolts to 59 N·m (6 kg-m, 43 ft-lb).**
c) **Loosen bolts completely.**
d) **Tighten bolts to 29 N·m (3 kg-m, 22 ft-lb).**
e) **Turn bolts 50 to 55 degrees clockwise or if angle wrench is not available, tighten bolts to 59±4.9 N·m (6±0.5 kg-m, 43±3.6 ft-lb).**
f) **Tightening bolts (11 - 14) to 6.3 to 8.3 N·m (0.64 to 0.85 kg-m, 55.8 to 73.5 in-lb).**

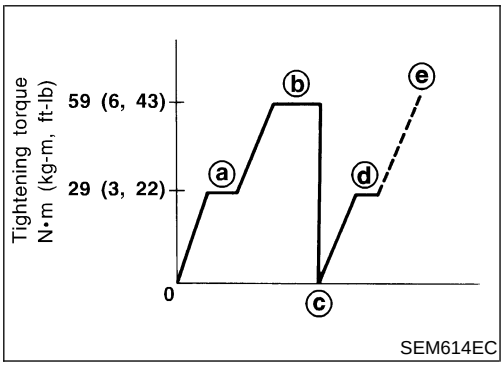

	Tightening torque N·m (kg-m, ft-lb)				
	a	**b**	**c**	**d**	**e**, **f**
Bolts (**1** - **10**)	29 (3, 22)	59 (6, 43)	0 (0, 0)	29 (3, 22)	50 - 55 degrees or 59±4.9 (6±0.5, 43±3.6 ft-lb)
Bolts (**11** - **14**)	—	—	—	—	6.3 - 8.3 (0.64 - 0.85, 55.8 - 73.5 in-lb)

4. Install camshaft.

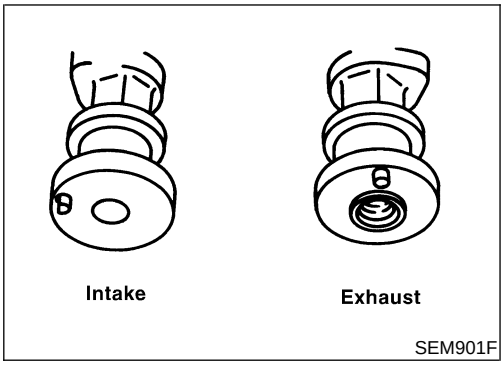

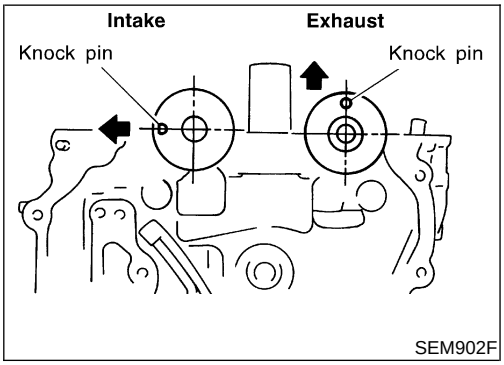

- **Make sure camshafts are aligned as shown in figure.**

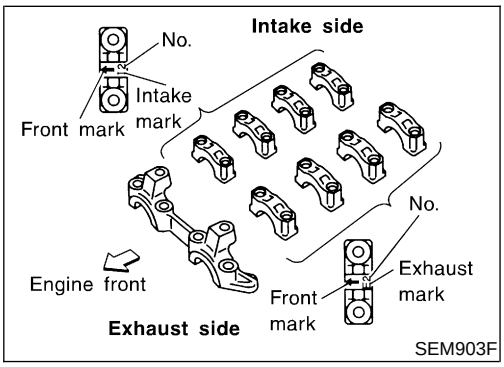

5. Install camshaft brackets.

- **Make sure camshaft brackets are aligned as marked during disassembly.**

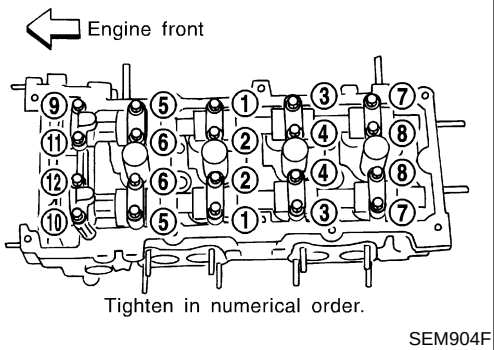

SEM904F

- **Apply new engine oil to bolt threads and seat surface.**
- **Tighten camshaft bracket bolts in the following steps.**

a) **a Tighten bolts 9 - 12, then 1 - 8.**
2.0 N·m (0.204 kg-m, 17.7 in-lb)

b) **b Tighten bolts 1 - 12.**
5.9 N·m (0.60 kg-m, 52.2 in-lb)

c) **c Tighten bolts 1 - 12.**
9.0 - 11.8 N·m (0.91 - 1.20 kg-m, 79 - 104 in-lb)

- **If any part of valve assembly or camshaft is replaced, check valve clearance according to reference data.**
After completing assembly check valve clearance. Refer to "Valve Clearance", EM-45.

Reference data valve clearance (Cold):
Intake
0.25 - 0.33 mm (0.010 - 0.013 in)
Exhaust
0.32 - 0.40 mm (0.013 - 0.016 in)

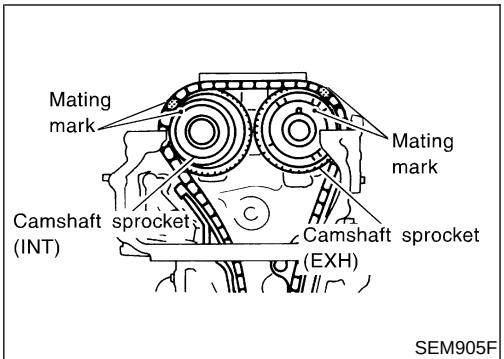

SEM905F

6. Install camshaft sprockets.
- **Set timing chain by aligning mating marks with those of camshaft sprockets.**

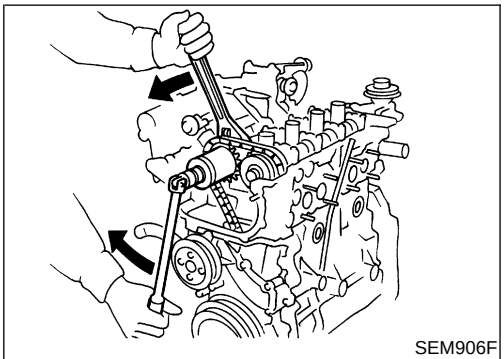
SEM906F

7. Install camshaft sprocket bolts to correct torque. Refer to "Components", EM-20.
- **Apply new engine oil to bolt threads and seat surface.**

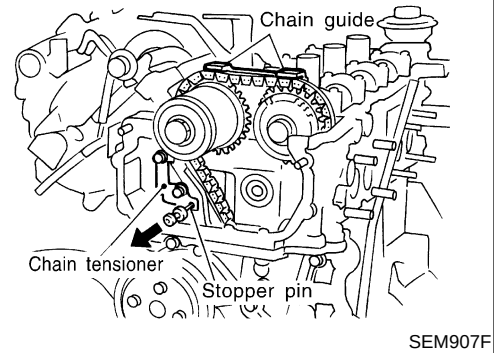

SEM907F

8. Install chain tensioner.
- **Before installing chain tensioner, insert a suitable pin into pin hole of chain tensioner.**
- **After installing chain tensioner, remove the pin.**

9. Install timing chain guide.

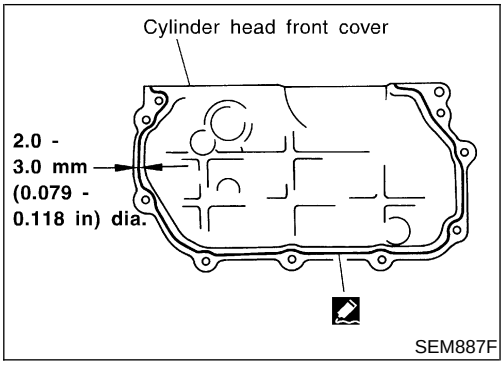

10. Install cylinder head front cover.
- Apply RTV silicone sealant to cylinder head front cover.
- Use Genuine RTV silicone sealant Part No. 999MP-A7007 or equivalent.

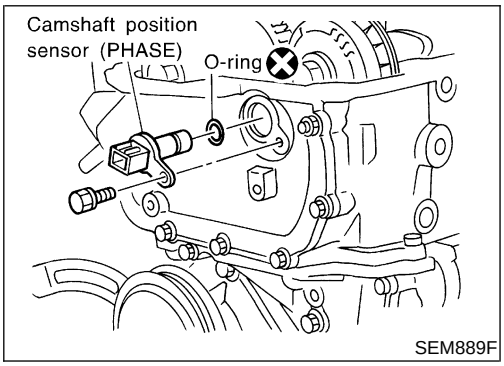

11. Install camshaft position sensor (PHASE).
12. Install intake valve timing control solenoid.

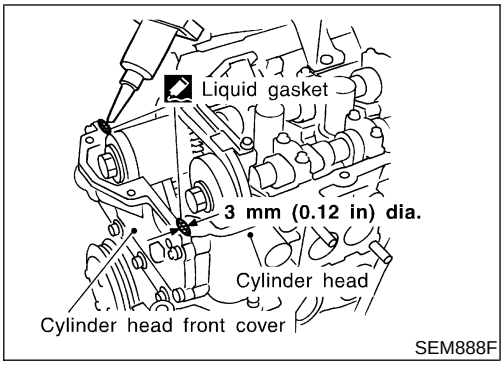

13. Before installing rocker cover, apply a bead of Genuine RTV silicone sealant Part No. 999MP-A7007 or equivalent to mating surface of cylinder head as shown.

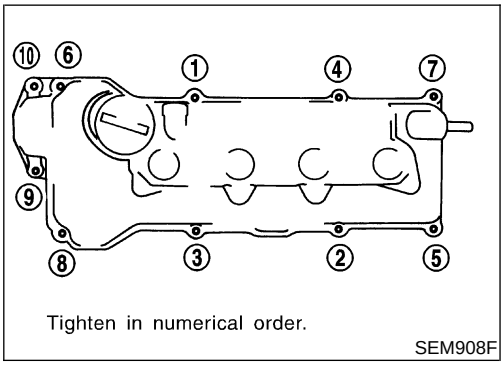

14. Install rocker cover with rocker cover gasket and tighten bolts in numerical order as shown in the figure.
15. Install spark plugs.
16. Install ignition coils.
17. Install exhaust manifold.
18. Install intake manifold rear supports.

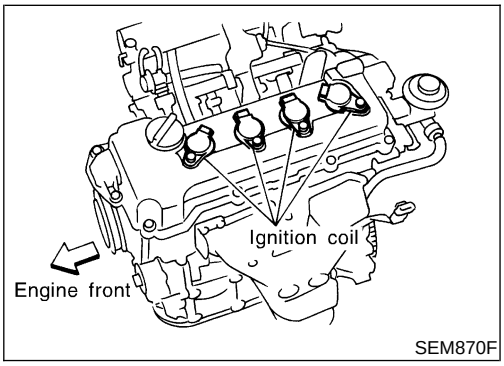

19. Connect the following components.
- EGR tube
- Ignition coils
- Fuel injector connectors
- Ground harness
- Breather pipe

  Harness connectors for:
- IACV-AAC valve
- Throttle position sensor
- Throttle position switch

- EGR temperature sensor
- Water hoses from collector
- Heater hoses
- PCV hose

Vacuum hoses for:

- EVAP canister
- Power brake booster
- Fuel pressure regulator

20. Install front exhaust tube.
21. Install front engine side covers.
22. Install air duct to intake manifold collector.
23. Install drive belts.
    For adjusting drive belt deflection, refer to ***MA-16***, "Checking Drive Belts".
24. Install fuel pump fuse. Erase DTC if any DTC appears. Refer to ***EC-98*** [QG18DE (except Calif. CA Model)] or ***EC-769*** [QG18DE (Calif. CA Model)], "HOW TO ERASE EMISSION-RELATED DIAGNOSTIC INFORMATION".

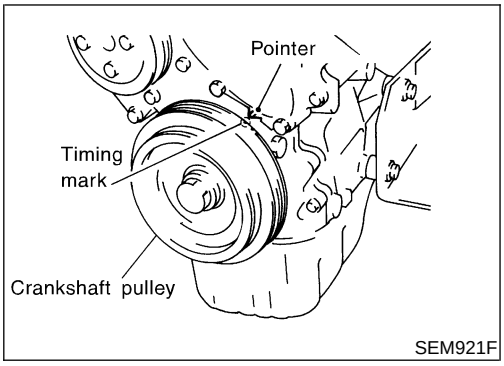

Valve Clearance

NIEM0060

CHECKING

NIEM0060S01

Check valve clearance while engine is warm and not running.

1. Remove rocker cover.
2. Remove all spark plugs.
3. Set No. 1 cylinder at TDC on its compression stroke.

- Align pointer with TDC mark on crankshaft pulley.
- Check that valve lifters on No. 1 cylinder are loose and valve lifters on No. 4 are tight.
- If not, turn crankshaft one revolution (360°) and align as described above.

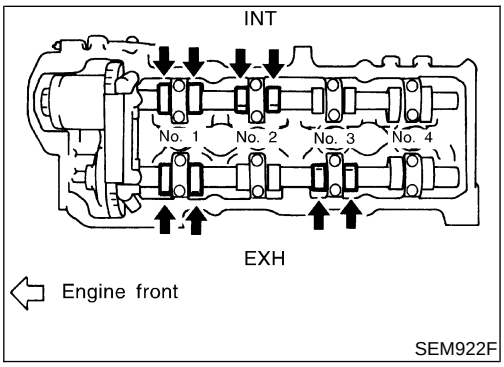

4. Check only those valves shown in the figure.

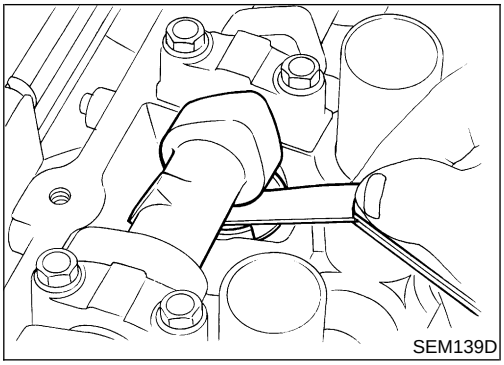
SEM139D

- Using a feeler gauge, measure clearance between valve lifter and camshaft.
- Record any valve clearance measurements which are out of specification. They will be used later to determine the required replacement adjusting shim.

Valve clearance for checking (Hot):
Intake
0.21 - 0.47 mm (0.008 - 0.019 in)
Exhaust
0.30 - 0.56 mm (0.012 - 0.022 in)

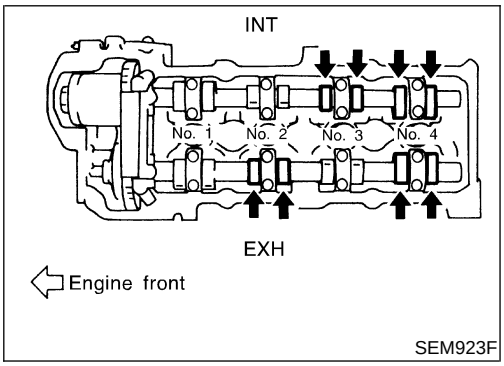

SEM923F

5. Turn crankshaft one revolution (360°) and align mark on crankshaft pulley with pointer.
6. Check only those valves shown in the figure.
- Use the same procedure as mentioned in step 4.
7. If all valve clearances are within specification, install the following parts:
- Rocker cover
- All spark plugs

ADJUSTING

NIEM0060S02

Adjust valve clearance while engine is cold.

1. Turn crankshaft. Position cam lobe upward on camshaft for valve that must be adjusted.
2. Place Tool (1) around camshaft as shown in figure.

Before placing Tool (1), rotate notch toward center of cylinder head. (See figure.) This will simplify shim removal later.

CAUTION:
Be careful not to damage cam surface with Tool (1).

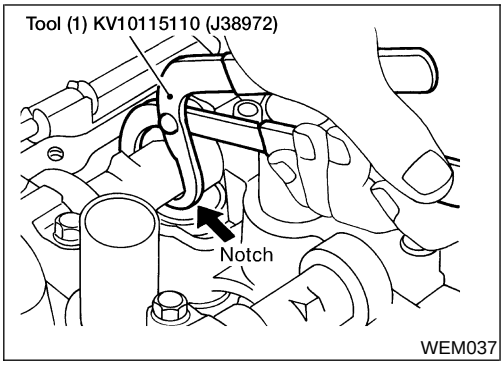

WEM037

3. Rotate Tool (1) so that valve lifter is pushed down.

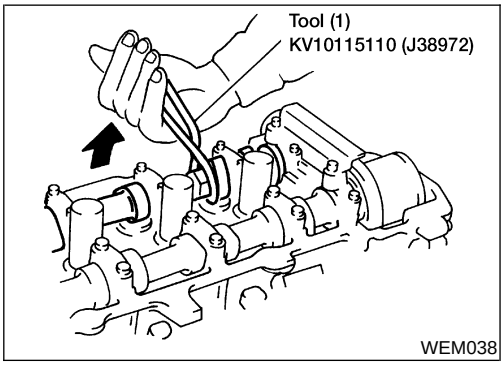

WEM038

4. Place Tool (2) between camshaft and valve lifter to retain valve lifter.

CAUTION:
- **Tool (2) must be placed as close to camshaft bracket as possible.**
- **Be careful not to damage cam surface with Tool (2).**

5. Remove Tool (1).

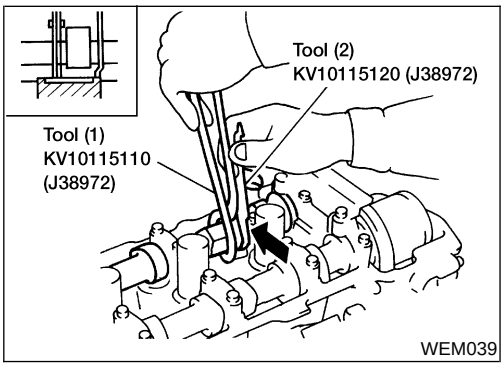

WEM039

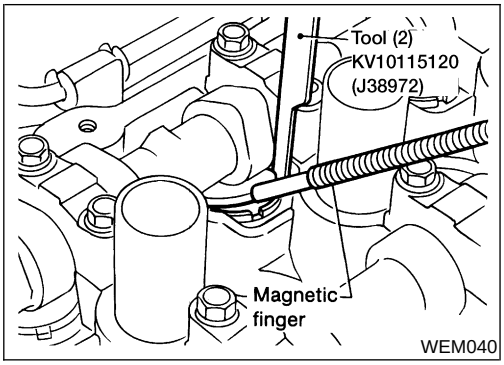

6. Remove adjusting shim using a small screwdriver and a magnetic finger.
7. Determine replacement adjusting shim size using the following formula.

- Use a micrometer to determine thickness of removed shim.
- Calculate thickness of new adjusting shim so valve clearance comes within specified values.
  R = Thickness of removed shim
  N = Thickness of new shim
  M = Measured valve clearance

  Intake:

  N = R + [M − 0.37 mm (0.0146 in)]

  Exhaust:

  N = R + [M − 0.40 mm (0.0157 in)]

Shims are available in 50 sizes from 2.00 mm (0.0787 in) to 2.98 mm (0.1173 in), in steps of 0.02 mm (0.0008 in).

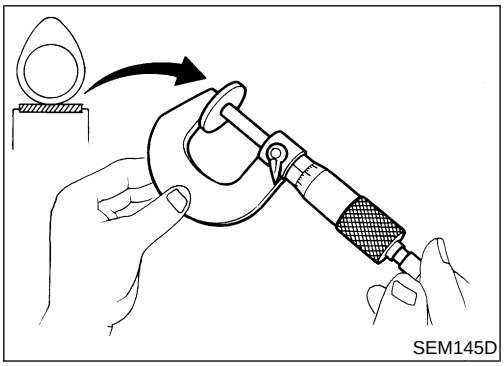

- Select the closest size shim to the calculated thickness. Refer to chart in "AVAILABLE SHIMS", EM-68.

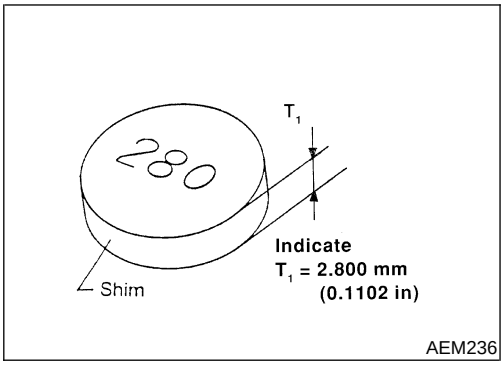

8. Install new shim using a suitable tool.

- **Install with the surface on which the thickness is stamped facing down.**

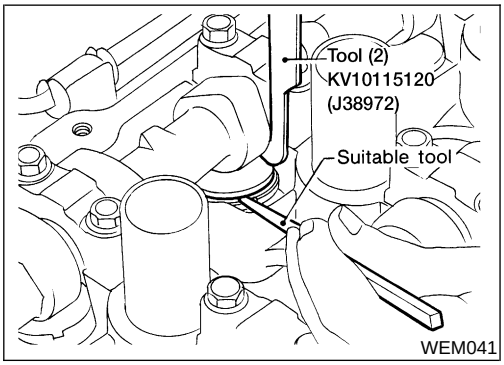

9. Place Tool (1) as explained in steps 2 and 3.
10. Remove Tool (2).
11. Remove Tool (1).

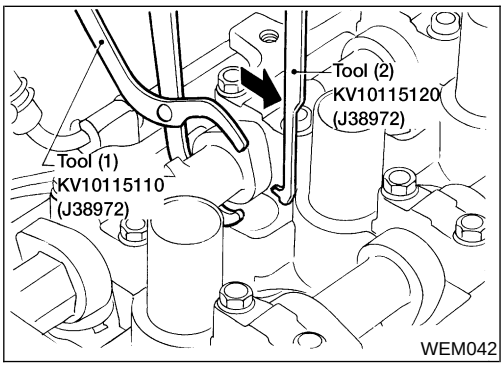

12. Recheck valve clearance.

Valve clearance:

Unit: mm (in)

Valve	For adjusting		For checking
	Hot	Cold* (reference data)	Hot
Intake	0.32 - 0.40 (0.013 - 0.016)	0.25 - 0.33 (0.010 - 0.013)	0.21 - 0.47 (0.008 - 0.019)
Exhaust	0.37 - 0.45 (0.015 - 0.018)	0.32 - 0.40 (0.013 - 0.016)	0.30 - 0.56 (0.012 - 0.022)

*: At a temperature of approximately 20°C (68°F)

Whenever valve clearances are adjusted to cold specifications, check that the clearances satisfy hot specifications and adjust again if necessary.

Removal and Installation

NIEM0063

SEC. 112

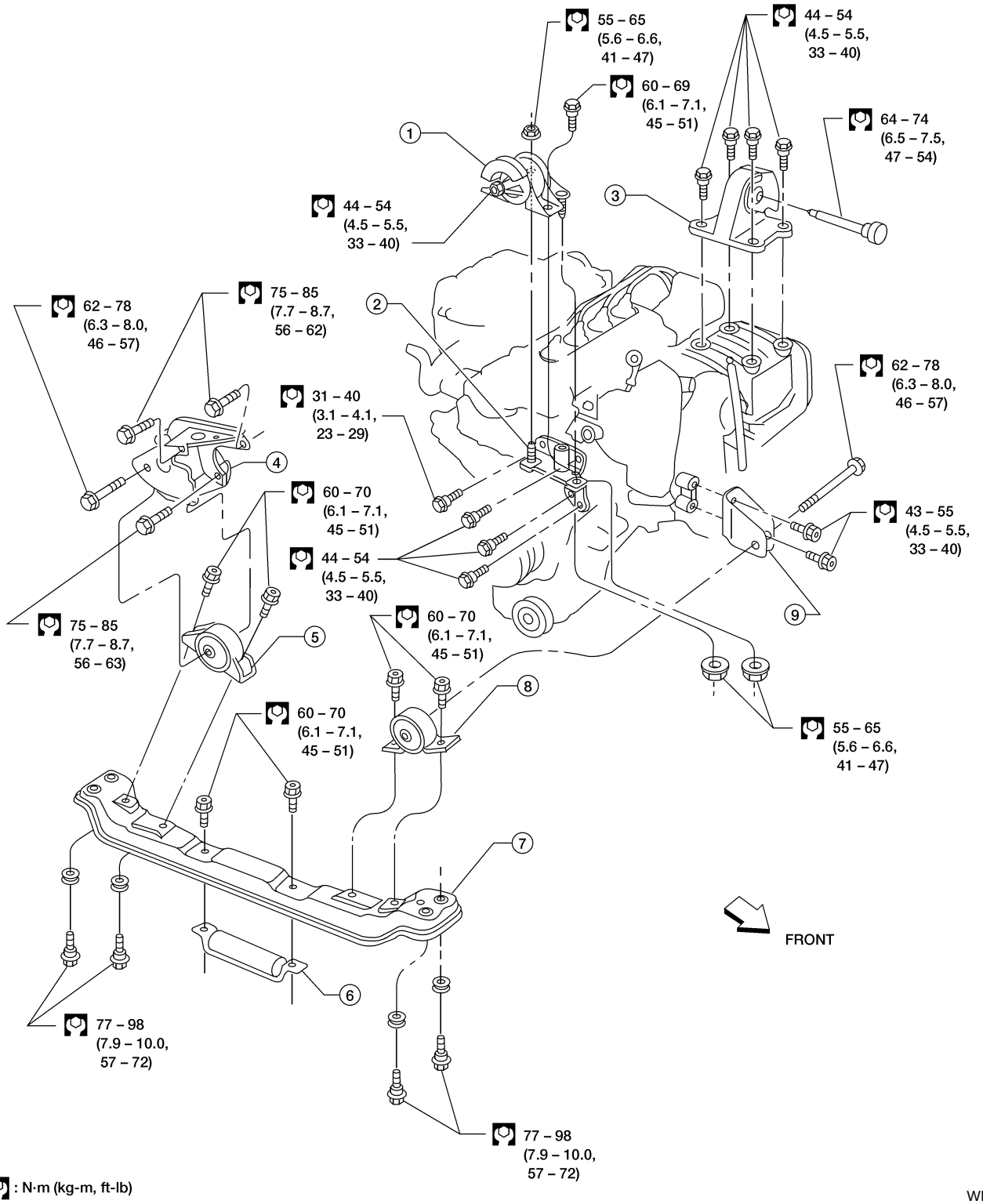

1. RH engine mounting
2. RH engine mounting bracket
3. LH engine mounting
4. Rear engine mounting bracket
5. Rear engine mounting
6. Dynamic damper
7. Center member
8. Front engine mounting
9. Front engine mounting bracket

WARNING:

- **Position vehicle on a flat and solid surface.**
- **Place chocks at front and back of rear wheels.**
- **Do not remove engine until exhaust system has completely cooled off, otherwise, you may burn yourself and/or fire may break out in fuel line.**
- **Before disconnecting fuel hose, release pressure. Refer to *EC-67* [QG18DE (except Calif. CA Model)], or *EC-743* [QG18DE (Calif. CA Model)], "Fuel Pressure Release".**
- **Be sure to lift engine and transaxle in a safe manner.**
- **For engines not equipped with engine slingers, attach proper slingers and bolts described in PARTS CATALOG.**

CAUTION:

- **When lifting engine, be sure to clear surrounding parts. Use special care near accelerator wire casing, brake lines and brake master cylinder.**
- **When lifting the engine, always use engine slingers in a safe manner.**
- **When removing drive shaft, be careful not to damage grease seal of transaxle.**
- **Before separating engine and transaxle, remove crankshaft position sensor (POS) from the cylinder block assembly.**
- **Always be extra careful not to damage edge of crankshaft position sensor (POS), or signal plate teeth.**

Engine cannot be removed separately from transaxle. Remove engine with transaxle as an assembly.

REMOVAL

NIEM0063S01

1. Refer to ***EC-67*** [QG18DE (except Calif. CA Model)], or ***EC-743*** [QG18DE (Calif. CA Model)], "Fuel Pressure Release".
2. Drain coolant from radiator and cylinder block. Refer to ***MA-17***, "Changing Engine Coolant".
3. Remove coolant reservoir tank.
4. Drain engine oil.
5. Remove battery and battery tray.
6. Remove air cleaner and air duct.
7. Remove drive belts.
8. Remove generator and air conditioner compressor from engine.
9. Remove power steering oil pump from engine and position aside.

Power steering oil pump does not need to be disconnected from power steering tubes.

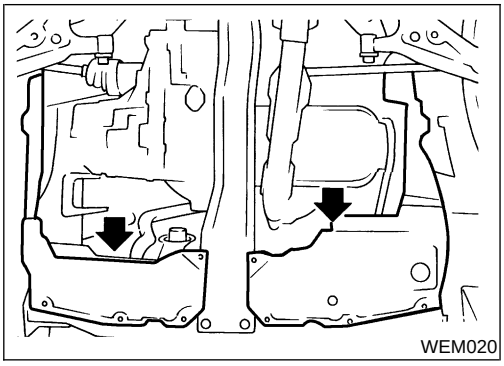
WEM020

10. Remove the following parts:
- RH and LH front tires
- Front splash undercovers
- RH and LH drive shaft. Refer to ***AX-12***, "REMOVAL".

When removing drive shaft, be careful not to damage transaxle side grease seal.

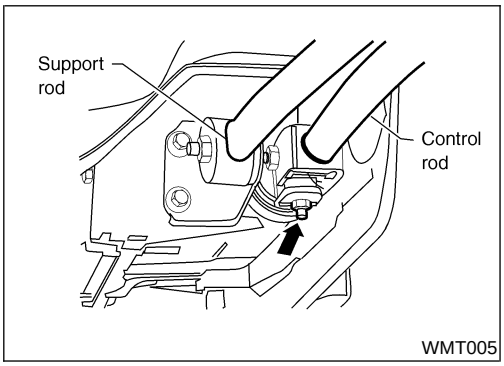

WMT005

- Disconnect control rod and support rod from transaxle. (M/T models.) Refer to ***MT-16***, "Transaxle Gear Control".
- Disconnect control cable from transaxle. (A/T models.) Refer to ***AT-272***, "Control Cable Adjustment".

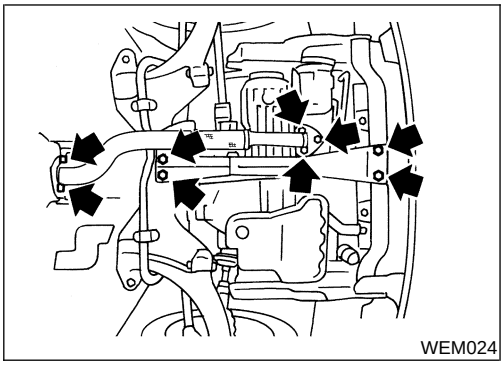
WEM024

- Center member
- Front exhaust tube
- Stabilizer bar
- Cooling fan
- Radiator
- EGR tube
- Fuel injector connectors
- Ground harness
- Breather pipe

Harness connectors for:
- IACV-AAC valve
- Throttle position sensor
- Throttle position switch
- EGR temperature sensor
- Heated oxygen sensors
- Water hoses from collector
- Heater hoses
- PCV hose
- Intake valve timing control solenoid

Vacuum hoses for:
- EVAP canister
- Power brake booster
- Fuel pressure regulator

11. Lift up engine slightly and disconnect or remove all engine mountings.

When lifting engine, be sure to clear surrounding parts. Use special care near brake tubes and brake master cylinder.

12. Remove engine with transaxle as shown.

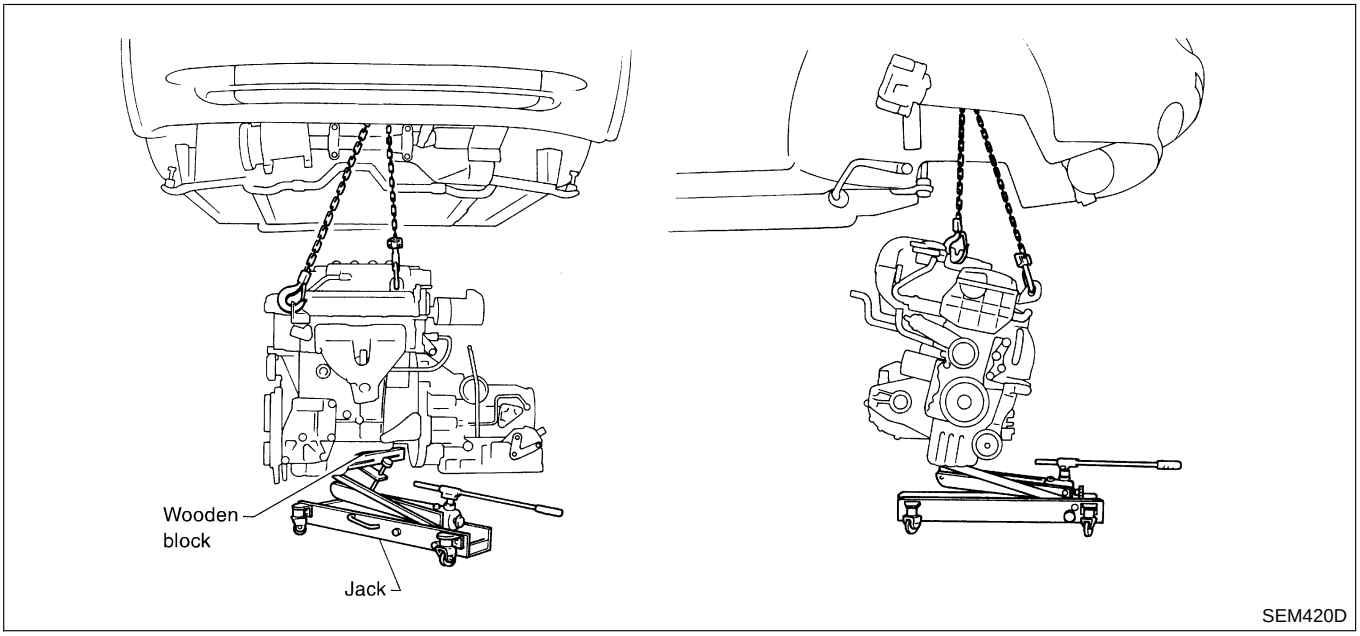

INSTALLATION

NIEM0063S02

- Install in reverse order of removal.

Components

NIEM0064

SEC. 110•120•226

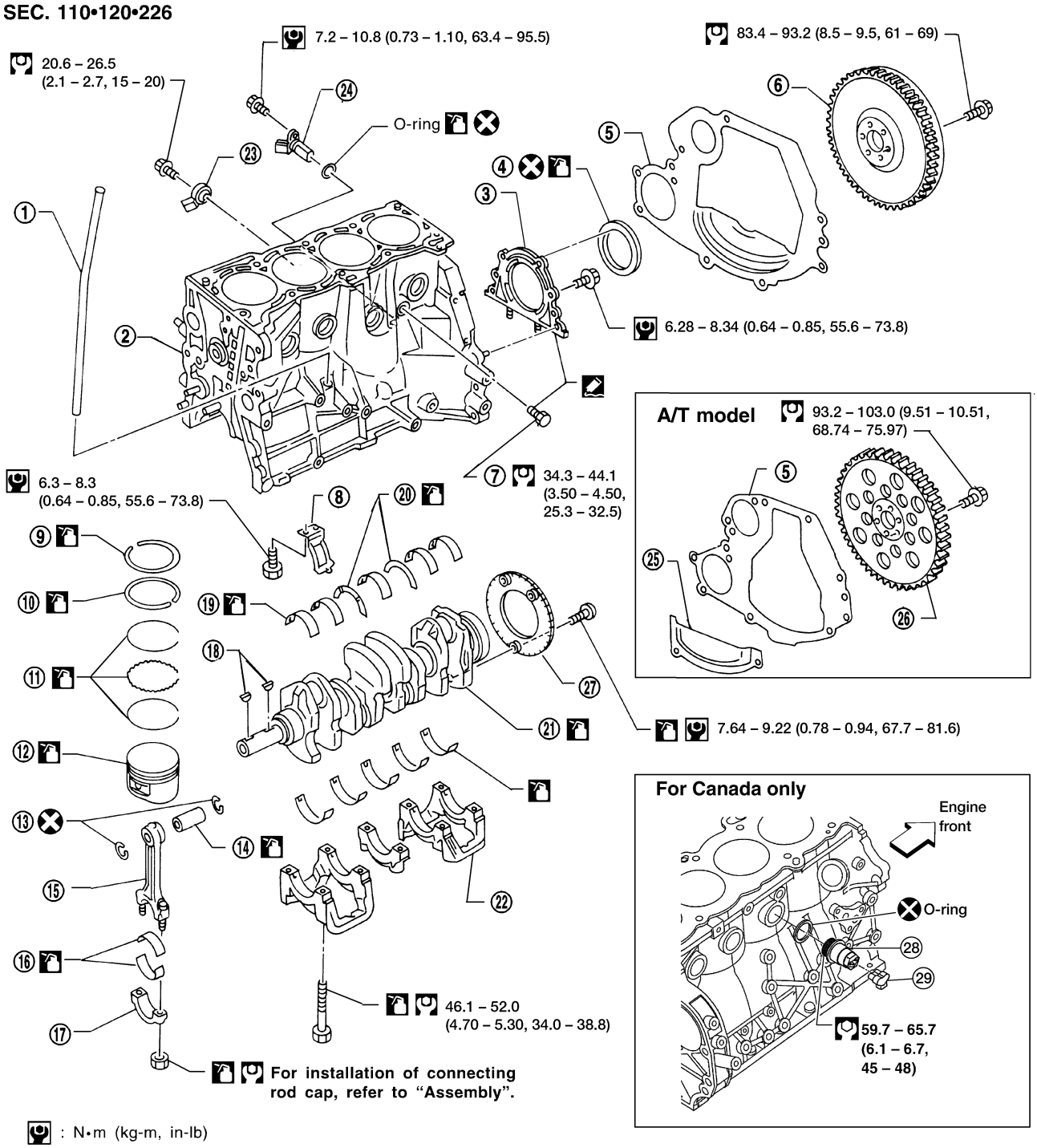

: N•m (kg-m, in-lb)

: N•m (kg-m, ft-lb)

: Use Genuine RTV Silicone Sealant Part No. 999MP-A7007 or equivalent.

: Lubricate with new engine oil.

WEM029

1. Oil level gauge guide
2. Cylinder block
3. Rear oil seal retainer
4. Rear oil seal
5. Rear plate
6. Flywheel
7. Drain plug
8. Baffle plate
9. Top ring
10. 2nd ring
11. Oil ring
12. Piston
13. Snap ring
14. Piston pin
15. Connecting rod
16. Connecting rod bearing
17. Connecting rod cap
18. Key

Components (Cont'd)

19. Main bearing
20. Thrust bearing
21. Crankshaft
22. Main bearing cap
23. Knock sensor
24. Crankshaft position sensor (POS)
25. Rear lower plate
26. Drive plate
27. Signal plate
28. Block heater (Canada only)
29. Connector protective cap (Canada only)

Removal and Installation

NIEM0065

CAUTION:

- **When installing sliding parts such as bearings and pistons, apply engine oil on the sliding surfaces.**
- **Place removed parts, such as bearings and bearing caps, in their proper order and direction.**
- **When installing connecting rod nuts and main bearing cap bolts, apply new engine oil to threads and seating surfaces.**
- **Do not allow any magnetic materials to contact the signal plate teeth of flywheel or drive plate, and rear plate.**
- **Remove the crankshaft position sensor (POS).**
- **Be careful not to damage sensor edges and signal plate teeth.**

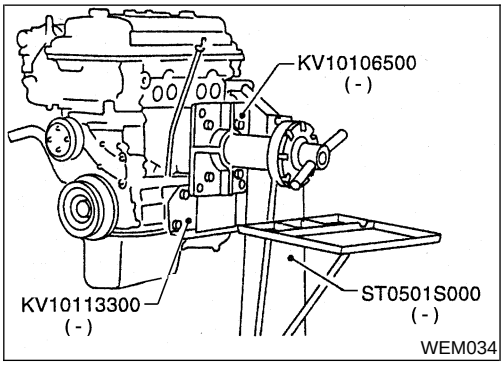

Disassembly

NIEM0066

PISTON AND CRANKSHAFT

NIEM0066S01

1. Place engine on a work stand.
2. Drain coolant and oil.
3. Remove timing chain.
   Refer to "Components", EM-20.

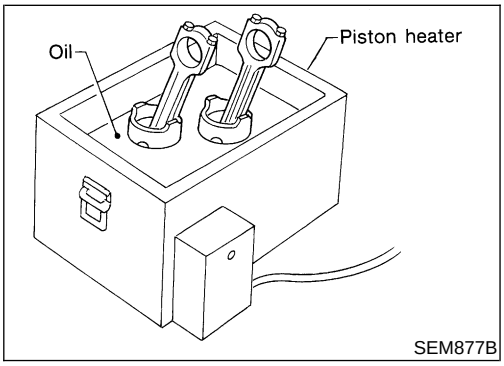

4. Remove pistons with connecting rod.
   - When disassembling piston and connecting rod, remove snap ring first. Then heat piston to 60 to 70°C (140 to 158°F) or use piston pin press stand at room temperature.

CAUTION:

- **When piston rings are not replaced, make sure that piston rings are mounted in their original positions.**
- **When replacing piston rings, if there is no punch mark, install with either side up.**

5. Measure crankshaft end play. Refer to "CRANKSHAFT", EM-63.

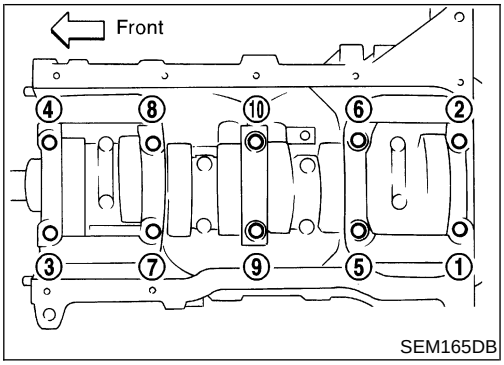

SEM165DB

6. Loosen main bearing caps in numerical order as shown in figure.
7. Remove bearing caps, main bearings and crankshaft.
- **Bolts should be loosened in two or three steps.**

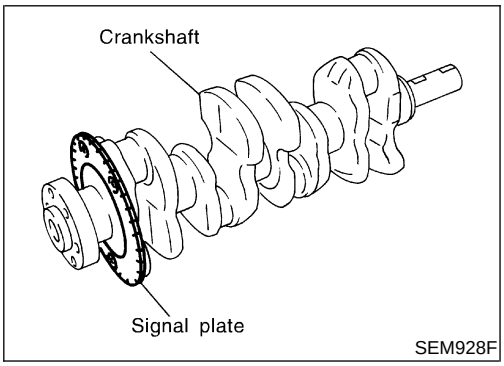

SEM928F

8. Remove signal plate from crankshaft.

Inspection

PISTON AND PISTON PIN CLEARANCE

NIEM0067

NIEM0067S01

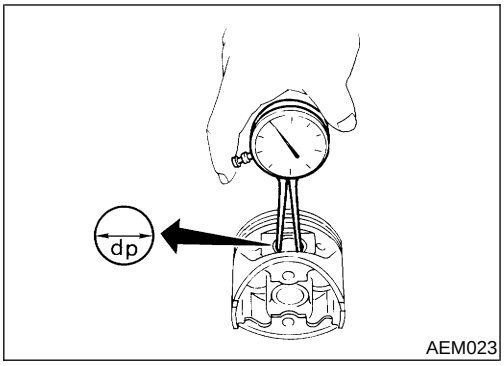

AEM023

1. Measure inner diameter of piston pin hole "dp".
   Standard diameter "dp":
   18.993 - 19.005 mm (0.7478 - 0.7482 in)

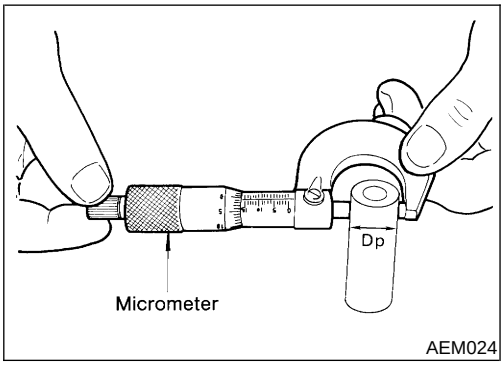

AEM024

2. Measure outer diameter of piston pin "Dp".
   Standard diameter "Dp":
   18.989 - 19.001 mm (0.7476 - 0.7481 in)
3. Calculate piston pin clearance.
   Dp − dp: 0.002 - 0.006 (0.0001 - 0.0002 in)
   If it exceeds the above value, replace piston assembly with pin.

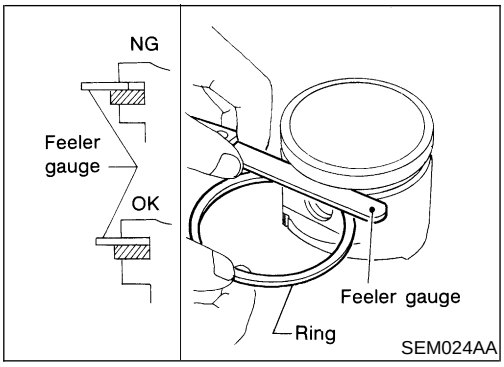

PISTON RING SIDE CLEARANCE

=NIEM0067S02

Side clearance:

Top ring

0.045 - 0.080 mm (0.0018 - 0.0031 in)

2nd ring

0.030 - 0.070 mm (0.0012 - 0.0028 in)

Oil ring

0.065 - 0.135 mm (0.0026 - 0.0053 in)

Max. limit of side clearance:

0.2 mm (0.008 in)

If out of specification, replace piston and/or piston ring assembly.

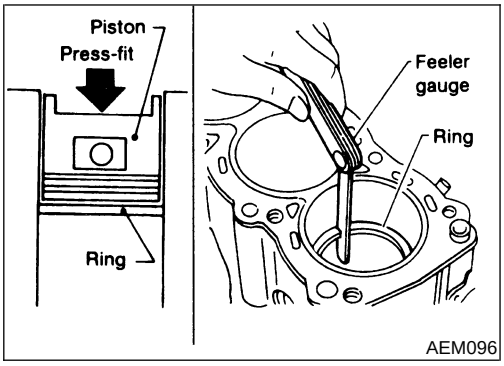

PISTON RING END GAP

NIEM0067S03

End gap:

Top ring 0.20 - 0.39 mm (0.0079 - 0.0154 in)

2nd ring 0.32 - 0.56 mm (0.0126 - 0.0220 in)

Oil ring 0.20 - 0.69 mm (0.0079 - 0.0272 in)

Max. limit of ring gap:

Top ring 0.49 mm (0.0193 in)

2nd ring 0.64 mm (0.0252 in)

Oil ring 1.09 mm (0.0429 in)

If out of specification, replace piston ring. If gap exceeds maximum limit with a new ring, rebore cylinder and use oversized piston and piston rings.

Refer to "Piston, Piston Ring and Piston Pin", EM-73.

- When replacing the piston, check the cylinder block surface for scratches or seizure. If scratches or seizure is found, hone or replace the cylinder block.

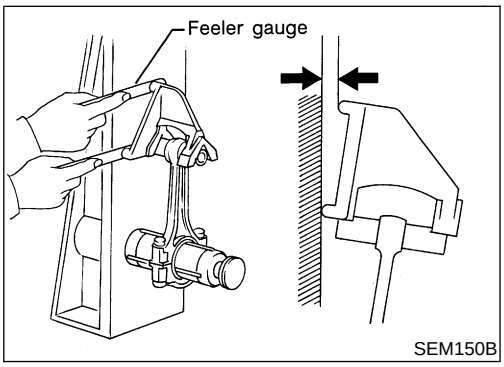

CONNECTING ROD BEND AND TORSION

NIEM0067S04

Bend:

Limit 0.15 mm (0.0059 in)

per 100 mm (3.94 in) length

Torsion:

Limit 0.3 mm (0.012 in)

per 100 mm (3.94 in) length

If it exceeds the limit, replace connecting rod assembly.

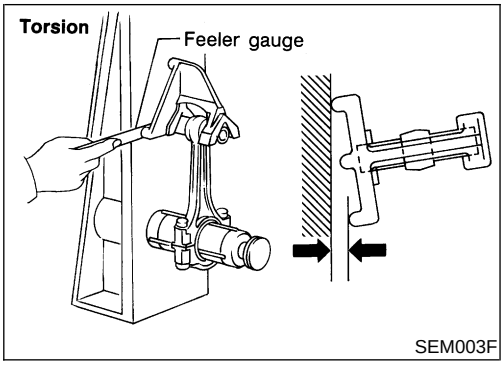

SEM003F

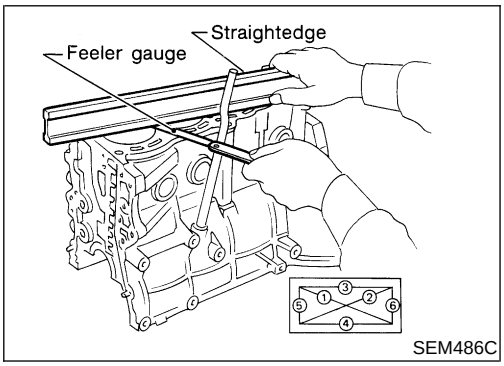

SEM486C

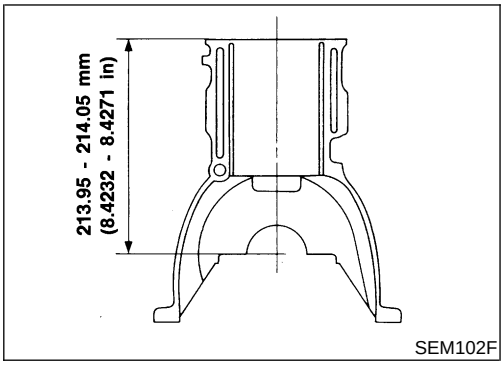

SEM102F

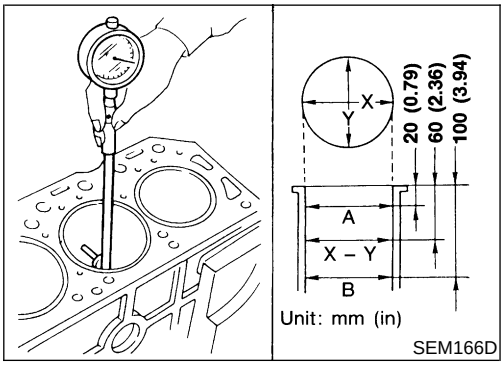

SEM166D

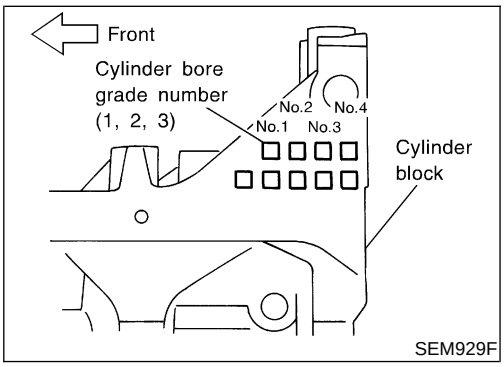

SEM929F

CYLINDER BLOCK DISTORTION AND WEAR

NIEM0067S05

Clean upper surface of cylinder block.

Use a reliable straightedge and feeler gauge to check the flatness of cylinder block surface. Check along six positions shown in figure.

Block surface flatness:

Standard Less than 0.03 mm (0.0012 in)

Limit 0.10 mm (0.004 in)

If out of specification, resurface it.

The limit for cylinder block resurfacing is determined by the amount of cylinder head resurfacing.

Amount of cylinder head resurfacing is "A".
Amount of cylinder block resurfacing is "B".

The maximum limit is as follows:

A + B = 0.2 mm (0.008 in)

Nominal cylinder block height from crankshaft center:

213.95 - 214.05 mm (8.4232 - 8.4271 in)

If necessary, replace cylinder block.

PISTON-TO-BORE CLEARANCE

NIEM0067S06

1. Using a bore gauge, measure cylinder bore for wear, out-of-round and taper.

   Standard inner diameter (Grade No. 1):

   80.000 - 80.010 mm (3.1496 - 3.1500 in)

   Wear limit:

   0.2 mm (0.008 in)

   Out-of-round (X − Y) standard:

   Less than 0.015 mm (0.0006 in)

   Taper (A − B) standard:

   Less than 0.01 mm (0.0004 in)

   If it exceeds the limit, rebore all cylinders. Replace cylinder block if necessary.

2. Check for score and seizure. If seizure is found, hone it.

- **If cylinder block or piston is replaced, match piston grade with grade number on cylinder block lower surface.**

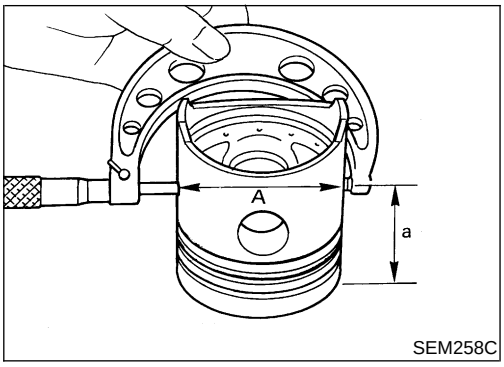

3. Measure piston skirt diameter.

   Piston diameter "A":

   Refer to "Piston, Piston Ring and Piston Pin", EM-73.

   Measuring point "a" (Distance from the top):

   42.3 mm (1.665 in)

4. Check that piston-to-bore clearance is within specification.

   Piston-to-bore clearance = cylinder bore measurement "B" − Piston diameter "A":

   0.025 - 0.045 mm (0.0010 - 0.0018 in)

5. Determine piston oversize according to amount of cylinder wear.

- **Oversize pistons are available for service. Refer to "Piston", EM-73.**

6. Cylinder bore size is determined by adding piston-to-bore clearance to piston diameter "A".

   Rebored size calculation:

   D = A + B − C

   where,

   D: Bored diameter

   A: Piston diameter as measured

   B: Piston-to-bore clearance

   C: Honing allowance 0.02 mm (0.0008 in)

7. Install main bearing caps and tighten bolts to the specified torque. This will prevent distortion of cylinder bores.
8. Cut cylinder bores.

- **When any cylinder needs boring, all other cylinders must also be bored.**
- **Do not cut too much out of cylinder bore at a time. Cut only 0.05 mm (0.0020 in) or so at a time.**

9. Hone cylinders to obtain specified piston-to-bore clearance.
10. Measure finished cylinder bore for out-of-round and taper.

- **Measurement should be done after cylinder bore cools down.**

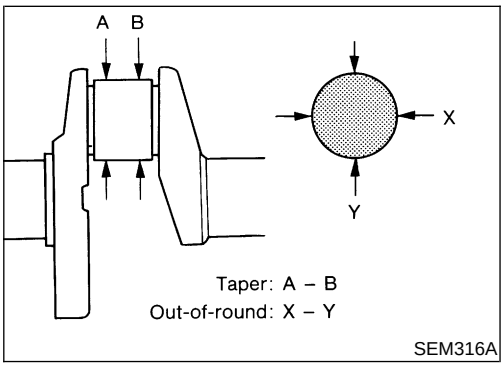

CRANKSHAFT

NIEM0067S07

1. Check crankshaft main and pin journals for score, wear or cracks.
2. With a micrometer, measure journals for taper and out-of-round.

   Out-of-round, Standard (X − Y):

   Less than 0.003 mm (0.0001 in)

   Taper, Standard (A − B):

   Less than 0.004 mm (0.0002 in)

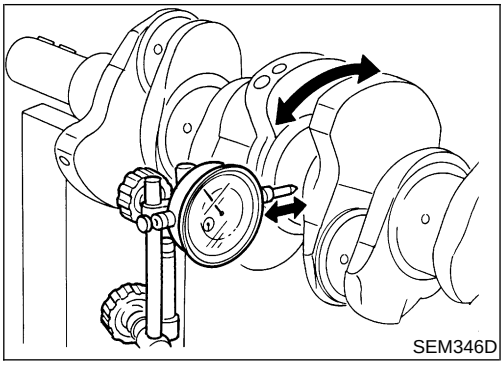
SEM346D

3. Measure crankshaft runout.

Runout, Standard (Total indicator reading):
Less than 0.04 mm (0.0016 in)

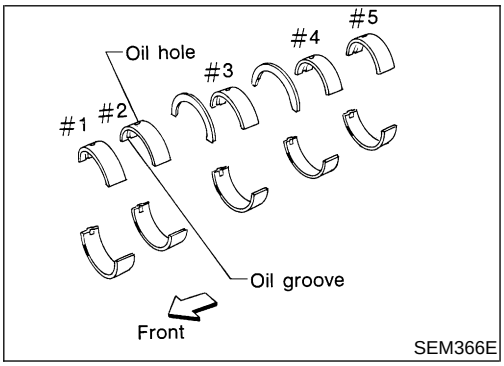

SEM366E

BEARING CLEARANCE

NIEM0067S08

- Use Method A or Method B. Method A is preferred because it is more accurate.

Method A (Using bore gauge and micrometer)

Main bearing

NIEM0067S0801

1. Set main bearings in their proper positions on cylinder block and main bearing cap.

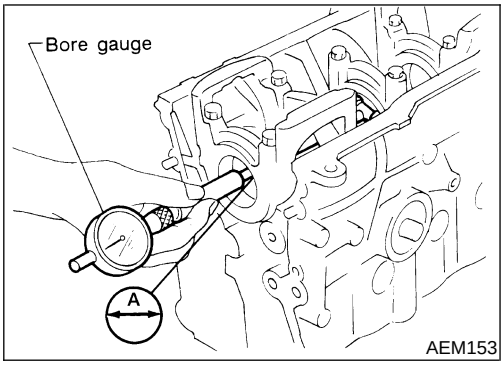

AEM153

2. Install main bearing cap to cylinder block.

Tighten all bolts in correct order in two or three stages. Refer to "CRANKSHAFT", EM-63.

3. Measure inner diameter "A" of each main bearing.

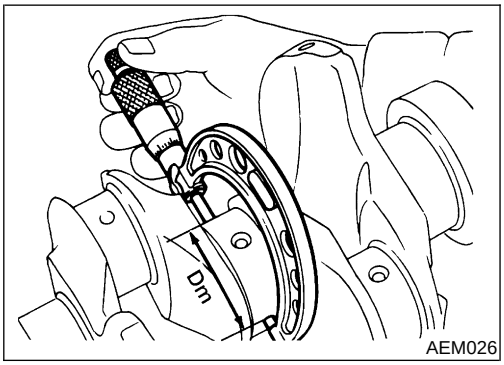

AEM026

4. Measure outer diameter "Dm" of each main journal in crankshaft.
5. Calculate main bearing clearance.

Main bearing clearance = A − Dm
Standard: 0.018 - 0.042 mm (0.0007 - 0.0017 in)
Limit: 0.1 mm (0.004 in)

If it exceeds the limit, replace bearing.
If clearance cannot be adjusted within standard of any bearing, grind crankshaft journal and use undersized bearing.

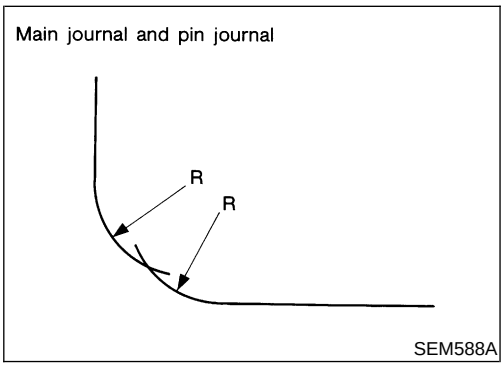

SEM588A

When grinding crank pin and crank journal:

- **Grind until clearance is within specified standard bearing clearance.**
- **Fillets should be finished as shown in the figure. R: 2.3 - 2.5 mm (0.091 - 0.098 in)**

Refer to "Bearing Clearance", EM-76 for standard bearing clearance and available spare parts.

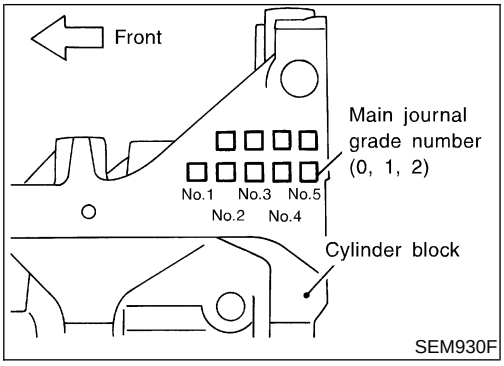

6. If the crankshaft is replaced, select thickness of main bearings as follows:
a. Grade number of each cylinder block main journal is punched on the respective cylinder block. These numbers are punched in either Arabic or Roman numerals.

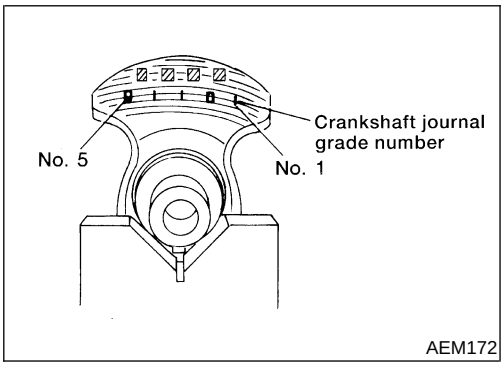

b. Grade number of each crankshaft main journal is punched on the respective crankshaft. These numbers are punched in either Arabic or Roman numerals.
c. Select main bearing with suitable thickness according to the following table.

Main bearing grade color:

Crankshaft main journal grade number	Cylinder block main journal grade number		
	0	1 or I	2 or II
0	0 (Black)	1 (Brown)	2 (Green)
1 or I	1 (Brown)	2 (Green)	3 (Yellow)
2 or II	2 (Green)	3 (Yellow)	4 (Blue)

For example:
Cylinder block main journal grade number: 1
Crankshaft main journal grade number: 2
Main bearing grade number = 1 + 2 = 3 (Yellow)

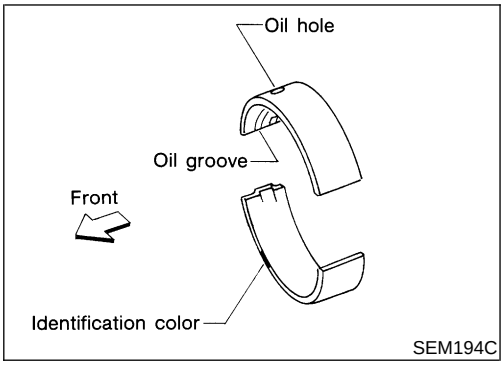

Connecting Rod Bearing (Big End)

NIEM0067S0802

1. Install connecting rod bearing to connecting rod and cap.
2. Install connecting rod cap to connecting rod.

Tighten bolts to the specified torque.

3. Measure inner diameter "C" of each bearing.

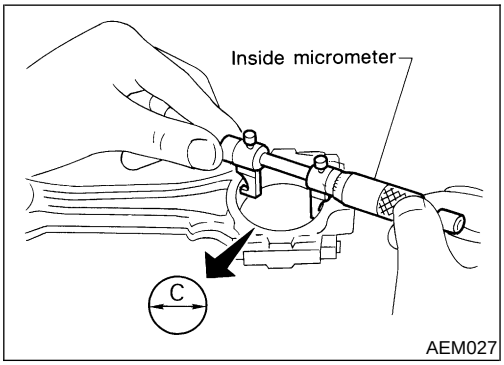

4. Measure outer diameter "Dp" of each crankshaft pin journal.
5. Calculate connecting rod bearing clearance.

Connecting rod bearing clearance = C − Dp
Standard: 0.014 - 0.039 mm (0.0006 - 0.0015 in)
Limit: 0.1 mm (0.004 in)

If it exceeds the limit, replace bearing.
If clearance cannot be adjusted using any standard bearing grade, grind crankshaft journal and use undersized bearing. Refer to "BEARING CLEARANCE, step 5", EM-59.

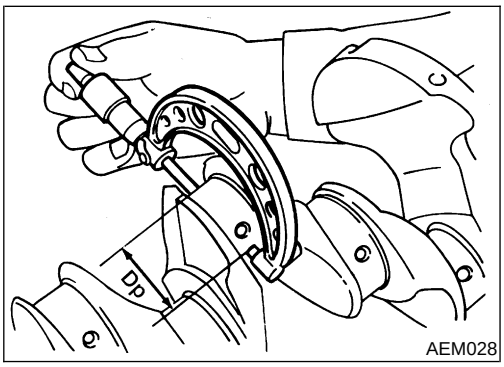

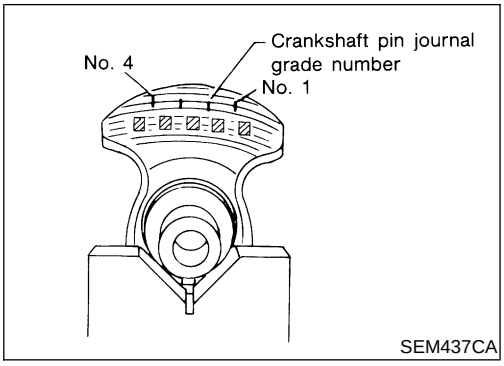

SEM437CA

- If a new bearing, crankshaft or connecting rod is replaced, select connecting rod bearing according to the following table.

Connecting rod bearing grade number:
These numbers are punched in either Arabic or Roman numerals.

Crankshaft pin journal grade number	Connecting rod bearing grade color
0	—
1or I	Brown
2 or II	Green

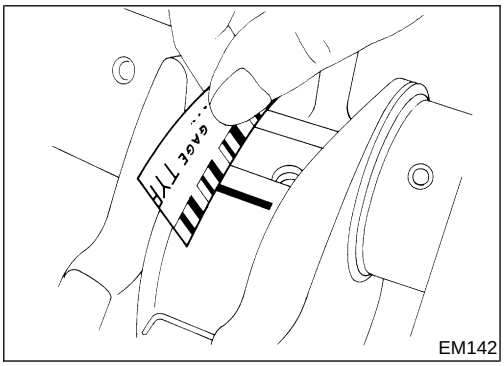
EM142

Method B (Using Plastigage)

CAUTION:

- **Do not turn crankshaft or connecting rod while Plastigage is being inserted.**
- **If incorrect bearing clearance exists, use a thicker or undersized main bearing to ensure specified clearance.**

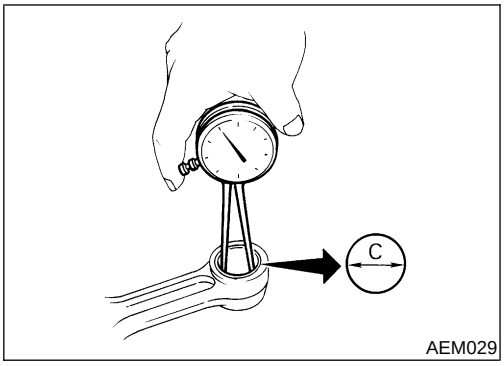

AEM029

CONNECTING ROD BUSHING CLEARANCE (SMALL END)

NIEM0067S09

1. Measure inner diameter "C" of bushing.

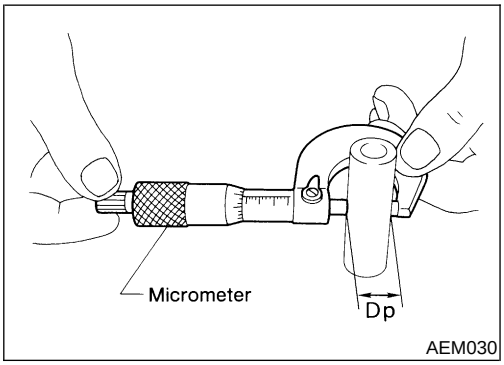

AEM030

2. Measure outer diameter "Dp" of piston pin.
3. Calculate piston pin to connecting rod bushing clearance.

Piston pin to connecting rod bushing clearance = C – Dp

Standard:

0.005 - 0.017 mm (0.0002 - 0.0007 in)

Limit:

0.023 mm (0.0009 in)

If it exceeds the limit, replace connecting rod assembly or connecting rod bushing and/or piston pin.

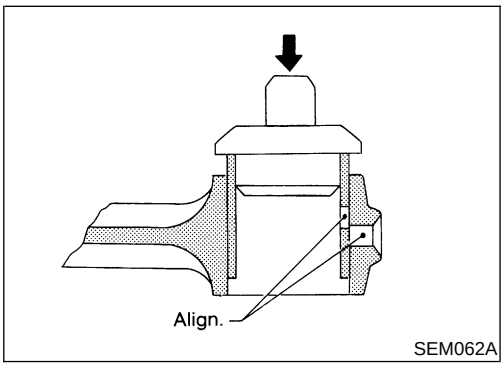

SEM062A

REPLACEMENT OF CONNECTING ROD BUSHING (SMALL END)

NIEM0067S10

1. Drive in small end bushing until it is flush with end surface of rod.

Be sure to align the oil holes.

2. Ream the bushing so that clearance with piston pin is within specification.

Piston pin to connecting rod bushing clearance:

0.005 - 0.017 mm (0.0002 - 0.0007 in)

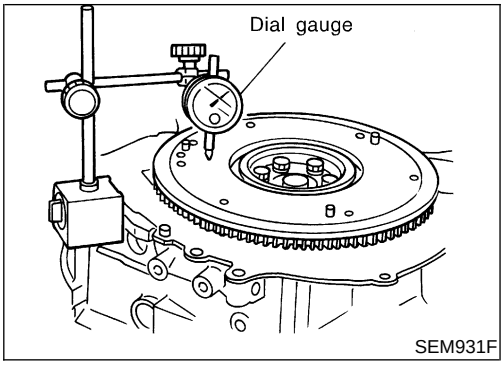

FLYWHEEL/DRIVE PLATE RUNOUT

NIEM0067S11

Runout (Total indicator reading):

Flywheel (M/T models)

Less than 0.15 mm (0.0059 in)

Drive plate (A/T models)*

Less than 0.2 mm (0.008 in)

***Measuring points: Approximately 115 mm (4.53 in) from crankshaft center**

CAUTION:

- **Do not allow any magnetic materials to contact the ring gear teeth and rear plate.**
- **Do not resurface flywheel. Replace as necessary.**

Assembly

NIEM0068

PISTON

NIEM0068S01

1. Install new snap ring on one side of piston pin hole.

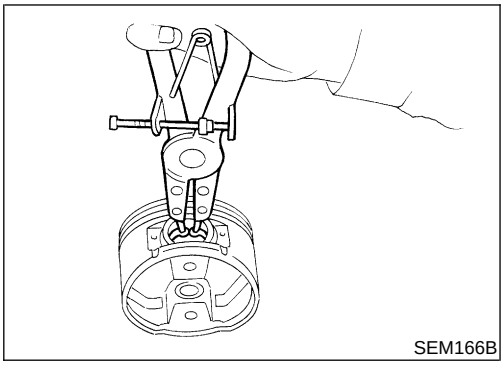

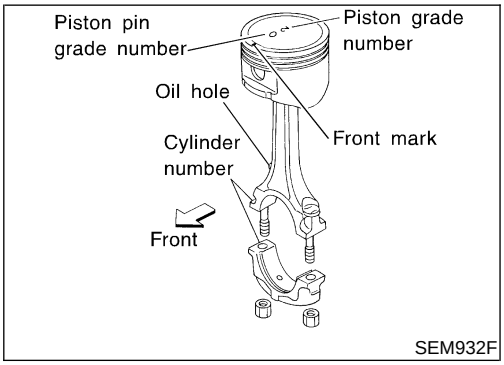

2. Heat piston to 60 to 70°C (140 to 158°F) and assemble piston, piston pin, connecting rod and new snap ring.

- **Align the direction of piston and connecting rod.**
- **Numbers stamped on connecting rod and cap correspond to each cylinder.**
- **After assembly, make sure connecting rod swings smoothly.**

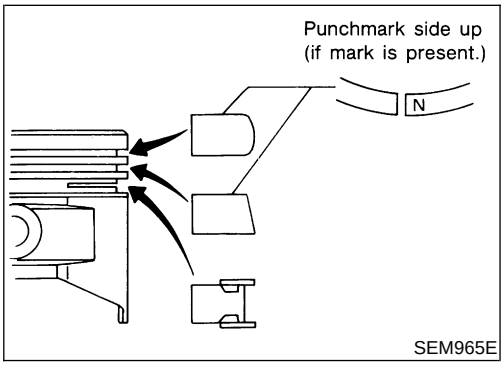

3. Set piston rings as shown.

CAUTION:

- **When piston rings are not replaced, make sure that piston rings are mounted in their original position.**
- **Install new piston rings either side up if there is no punch mark.**

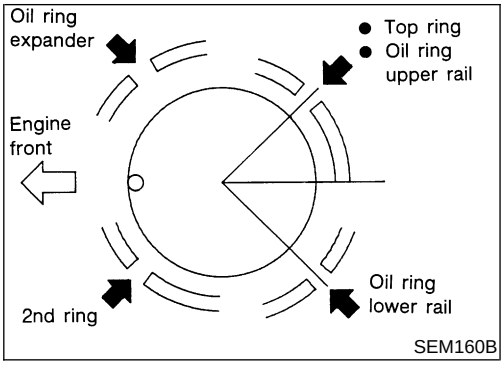

SEM160B

- **Align piston rings so that end gaps are positioned as shown.**

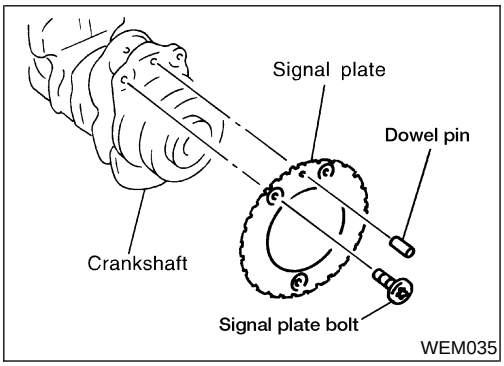

WEM035

CRANKSHAFT

NIEM0068S02

1. Install signal plate to crankshaft using dowel pin to properly position the signal plate. Remove the dowel pin after the signal plate bolts are tightened.
- Tighten bolts to 7.64 - 9.22 N·m (0.78 - 0.94 kg-m, 67.7 - 81.6 in-lb)

Dowel pin diameter: 6 mm (3/16 in)

2. Set main bearings in their proper positions on cylinder block and main bearing cap.
- **Confirm that correct main bearings are selected by using Method A or Method B. Refer to "BEARING CLEARANCE", EM-59.**
- **Apply new engine oil to bearing surfaces.**

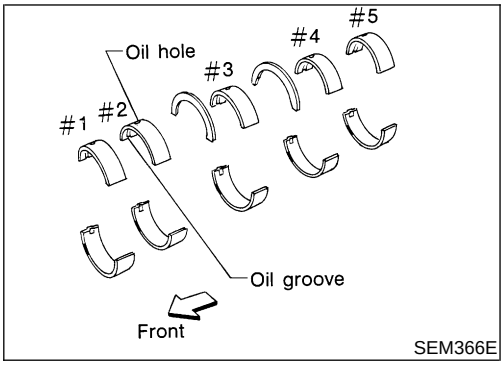

SEM366E

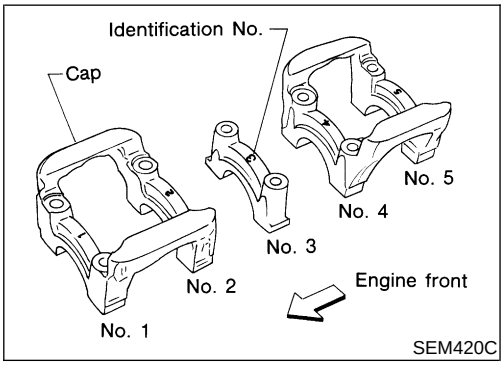

SEM420C

3. Install crankshaft and main bearing caps and tighten bolts to the specified torque.
- **Apply new engine oil to the bolt thread and seat surface.**
- **Prior to tightening bearing cap bolts, shift crankshaft back and forth to properly seat the bearing caps.**
- **Tighten bearing cap bolts gradually in two or three stages. Start with center bearing and move outward as shown in figure.**
- **After securing bearing cap bolts, make sure crankshaft turns smoothly by hand.**

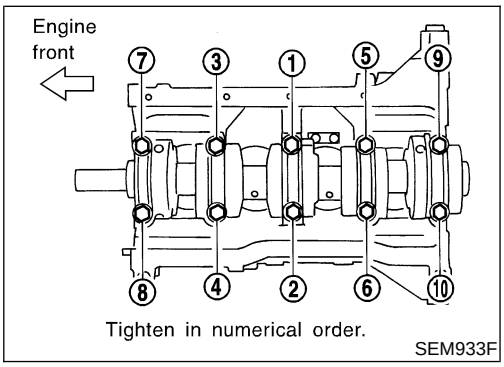

SEM933F

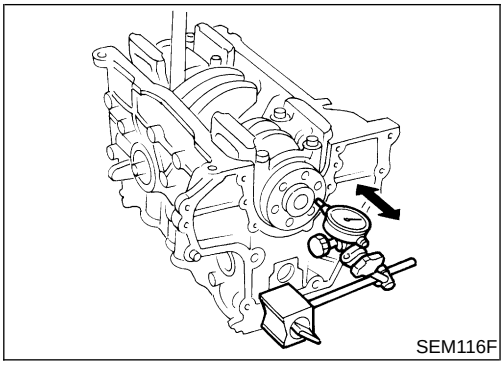
SEM116F

4. Measure crankshaft end play.

Crankshaft end play:

Standard

0.060 - 0.220 mm (0.0024 - 0.0087 in)

Limit

0.3 mm (0.012 in)

If beyond the limit, replace thrust bearing with new ones.

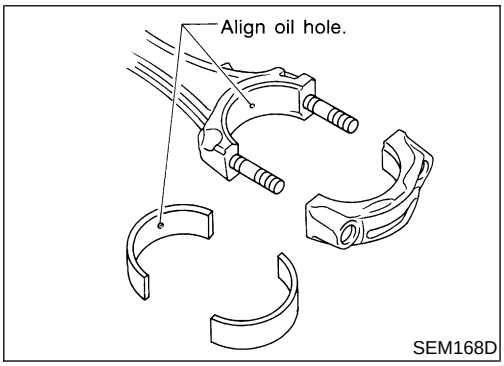

SEM168D

5. Install connecting rod bearings in connecting rods and connecting rod caps.

- **Confirm that correct bearings are used. Refer to "Connecting Rod Bearing (Big End)", EM-60.**
- **Install bearings so that oil hole in connecting rod aligns with oil hole of bearing.**
- **Apply new engine oil to bolt threads and bearing surfaces.**

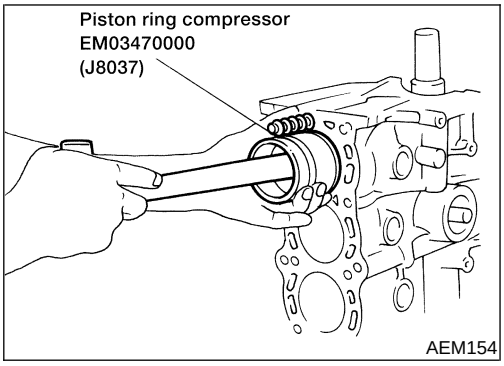

AEM154

6. Install pistons with connecting rods.

a. Install them into corresponding cylinders with Tool.

- **Make sure connecting rod does not scratch cylinder wall.**
- **Make sure connecting rod bolts do not scratch crankshaft pin journals.**
- **Arrange so that front mark on piston head faces engine.**
- **Apply new engine oil to piston rings and sliding surface of piston.**

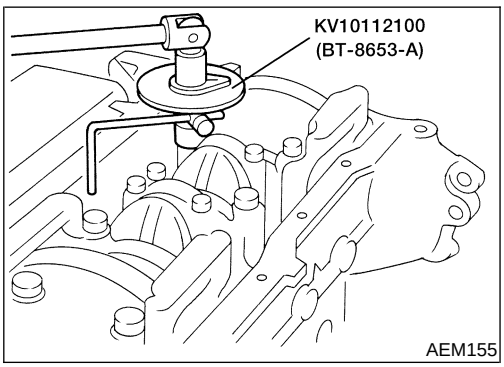

AEM155

b. Install connecting rod caps.
Apply new engine oil to bolt threads and nut seating surfaces.
Tighten connecting rod cap nuts in the following procedure:

- **Tighten to 13.72 to 15.68 N·m (1.399 to 1.599 kg-m, 10.120 - 11.566 ft-lb).**
- **Turn nuts to 35° to 40° degrees clockwise with an angle wrench. If an angle wrench is not available, tighten nuts to 23 to 28 N·m (2.3 to 2.9 kg-m, 17 to 21 ft-lb).**

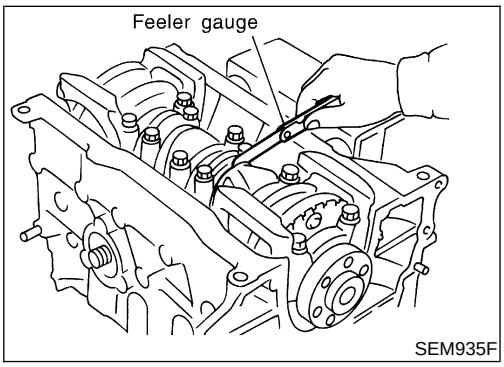

SEM935F

7. Measure connecting rod side clearance.

Connecting rod side clearance:

Standard

0.200 - 0.470 mm (0.0079 - 0.0185 in)

Limit

0.52 mm (0.0205 in)

If beyond the limit, replace connecting rod and/or crankshaft.

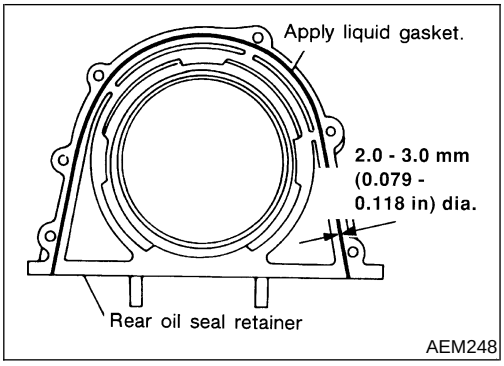

8. Install rear oil seal retainer.
a. Before installing rear oil seal retainer, remove old RTV silicone sealant from cylinder block and retainer.
b. Apply a continuous bead of RTV silicone sealant to rear oil seal retainer.

- **Use Genuine RTV silicone sealant Part No. 999MP-A7007 or equivalent.**
- **Apply around inner side of bolt holes.**

9. Install crankshaft position sensor (POS).

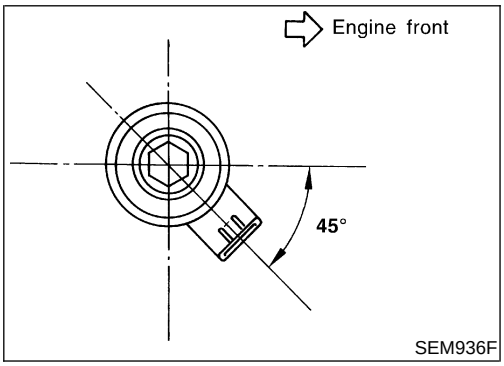

10. Install knock sensor at correct angle at the correct angle.

General Specifications

NIEM0069

Engine		QG18DE
Classification		Gasoline
Cylinder arrangement		4, in-line
Displacement cm^3 (cu in)		1,769 (107.94)
Bore × stroke mm (in)		80.0 x 88.0 (3.150 x 3.465)
Valve arrangement		DOHC
Firing order		1-3-4-2
Number of piston rings	Compression	2
	Oil	1
Number of main bearings		5
Compression ratio		9.5

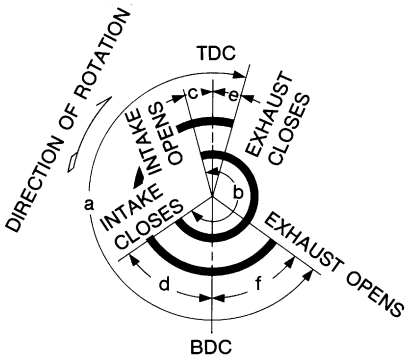

EM120

	a	b	c	d	e	f
Valve timing	222°	234°	-3° (17°)	57° (37°)	4°	38°

( ): Intake valve timing control ON

Compression Pressure

NIEM0070

Unit: kPa (bar, kg/cm^2, psi)/350 rpm

Standard	1,324 (13.24, 13.5, 192)
Minimum	1,157 (11.57, 11.5, 168)
Difference limit between cylinders	98 (0.98, 1.0, 14)

Cylinder Head

NIEM0071

Unit: mm (in)

	Standard	Limit
Head surface flatness	Less than 0.03 (0.0012)	0.1 (0.004)
Height	117.8 - 118.0 (4.638 - 4.646)	—

Valve

VALVE

NIEM0072

NIEM0072S01
Unit: mm (in)

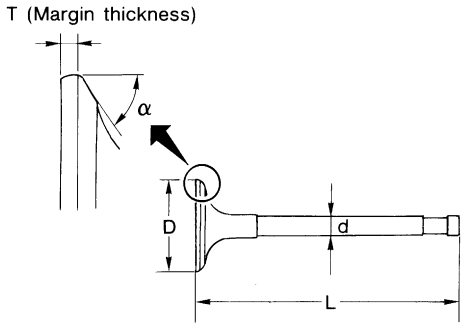

SEM188A

Valve head diameter “D”	Intake	29.9 - 30.2 (1.177 - 1.189)
	Exhaust	24.9 - 25.2 (0.980 - 0.992)
Valve length “L”	Intake	92.00 - 92.50 (3.6220 - 3.6417)
	Exhaust	92.37 - 92.87 (3.6366 - 3.6563)
Valve stem diameter “d”	Intake	5.465 - 5.480 (0.2152 - 0.2157)
	Exhaust	5.445 - 5.460 (0.2144 - 0.2150)
Valve face angle “α”		45°15′ - 45°45′
Valve margin “T” limit		1.05 - 1.35 (0.0413 - 0.0531)
Valve stem end surface grinding limit		0.2 (0.008)

VALVE SPRING

NIEM0072S02

Free height mm (in)		41.19 (1.622)
Pressure N (kg, lb) at height mm (in)	Standard	370.0 (37.73, 83.19) at 23.64 (0.9307)
	Limit	347.8 (35.46, 78.19)at 23.64 (0.9307)
Out-of-square mm (in)		Less than 1.75 (0.0689)

VALVE LIFTER

NIEM0072S03
Unit: mm (in)

Valve lifter outside diameter	29.960 - 29.975 (1.1795 - 1.1801)
Lifter guide inside diameter	30.000 - 30.021 (1.1811 - 1.1819)
Clearance between valve lifter and valve lifter guide	0.025 - 0.065 (0.0010 - 0.0026)

VALVE CLEARANCE

NIEM0072S04
Unit: mm (in)

	For adjusting		For checking
	Hot	Cold* (reference data)	Hot
Intake	0.32 - 0.40 (0.013 - 0.016)	0.25 - 0.33 (0.010 - 0.013)	0.21 - 0.47 (0.008 - 0.019)
Exhaust	0.37 - 0.45 (0.015 - 0.018)	0.32 - 0.40 (0.013 - 0.016)	0.30 - 0.56 (0.012 - 0.022)

*: At a temperature of approximately 20°C (68°F)

Whenever valve clearances are adjusted to cold specifications, check that the clearances satisfy hot specifications and adjust again if necessary.

VALVE GUIDE

NIEM0072S05

Unit: mm (in)

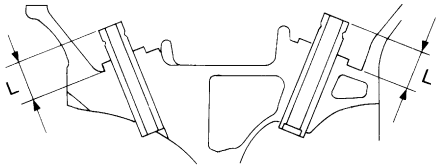

MEM096A

		Intake		Exhaust	
		Standard	Service	Standard	Service
Valve guide	Outer diameter	9.523 - 9.534 (0.3749 - 0.3754)	9.723 - 9.734 (0.3828 - 0.3832)	9.523 - 9.534 (0.3749 - 0.3754)	9.723 - 9.734 (0.3828 - 0.3832)
	Inner diameter [Finished size]	5.500 - 5.515 (0.2165 - 0.2171)		5.500 - 5.515 (0.2165 - 0.2171)	
Cylinder head valve guide hole diameter		9.475 - 9.496 (0.3730 - 0.3739)	9.685 - 9.696 (0.3813 - 0.3817)	9.475 - 9.496 (0.3730 - 0.3739)	9.685 - 9.696 (0.3813 - 0.3817)
Interference fit of valve guide		0.027 - 0.059 (0.0011 - 0.0023)	0.027 - 0.049 (0.0011 - 0.0019)	0.027 - 0.059 (0.0011 - 0.0023)	0.027 - 0.049 (0.0011 - 0.0019)
Stem to guide clearance		0.020 - 0.050 (0.0008 - 0.0020)		0.040 - 0.070 (0.0016 - 0.0028)	
Valve deflection limit (Dial gauge reading)		0.2 (0.008)			
Projection length "L"		11.5 - 11.7 (0.453 - 0.461)			

AVAILABLE SHIMS

NIEM0072S06

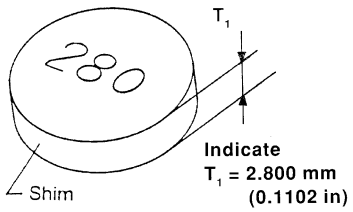

AEM236

Thickness mm (in)	Identification mark
2.00 (0.0787)	200
2.02 (0.0795)	202
2.04 (0.0803)	204
2.06 (0.0811)	206
2.08 (0.0819)	208
2.10 (0.0827)	210
2.12 (0.0835)	212
2.14 (0.0843)	214
2.16 (0.0850)	216

2.18 (0.0858)	218
2.20 (0.0866)	220
2.21 (0.0870)	221
2.22 (0.0874)	222
2.23 (0.0877)	223
2.24 (0.0882)	224
2.25 (0.0885)	225
2.26 (0.0890)	226
2.27 (0.0893)	227
2.28 (0.0898)	228
2.29 (0.0901)	229
2.30 (0.0906)	230
2.31 (0.0909)	231
2.32 (0.0913)	232
2.33 (0.0917)	233
2.34 (0.0921)	234
2.35 (0.0925)	235
2.36 (0.0929)	236
2.37 (0.0933)	237
2.38 (0.0937)	238
2.39 (0.0940)	239
2.40 (0.0945)	240
2.41 (0.0948)	241
2.42 (0.0953)	242
2.43 (0.0956)	243
2.44 (0.0961)	244
2.45 (0.0964)	245
2.46 (0.0969)	246
2.47 (0.0972)	247
2.48 (0.0976)	248
2.49 (0.0980)	249
2.50 (0.0984)	250
2.51 (0.0988)	251
2.52 (0.0992)	252
2.53 (0.0996)	253
2.54 (0.1000)	254
2.55 (0.1003)	255
2.56 (0.1008)	256
2.57 (0.1011)	257
2.58 (0.1016)	258
2.59 (0.1019)	259

2.60 (0.1024)	260
2.61 (0.1027)	261
2.62 (0.1031)	262
2.63 (0.1035)	263
2.64 (0.1039)	264
2.65 (0.1043)	265
2.66 (0.1047)	266
2.68 (0.1055)	268
2.70 (0.1063)	270
2.72 (0.1071)	272
2.74 (0.1079)	274
2.76 (0.1087)	276
2.78 (0.1094)	278
2.80 (0.1102)	280
2.82 (0.1110)	282
2.84 (0.1118)	284
2.86 (0.1126)	286
2.88 (0.1134)	288
2.90 (0.1142)	290
2.92 (0.1150)	292
2.94 (0.1157)	294
2.96 (0.1165)	296
2.98 (0.1173)	298

VALVE SEAT

NIEM0072S07
Unit: mm (in)

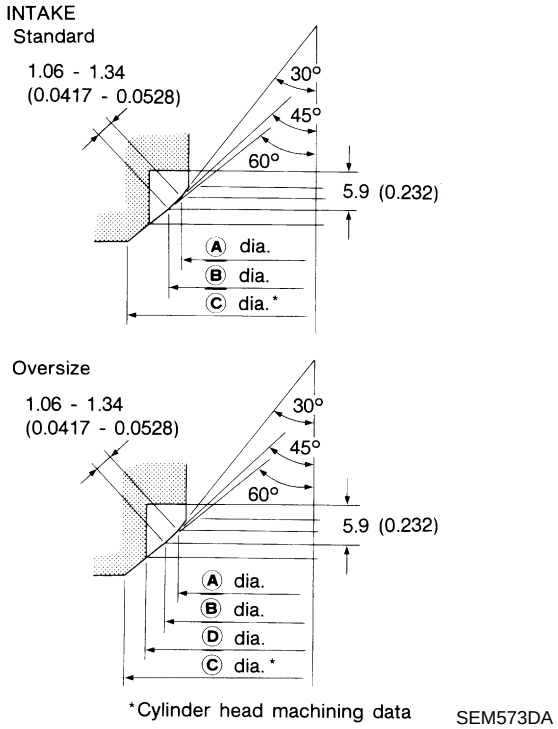

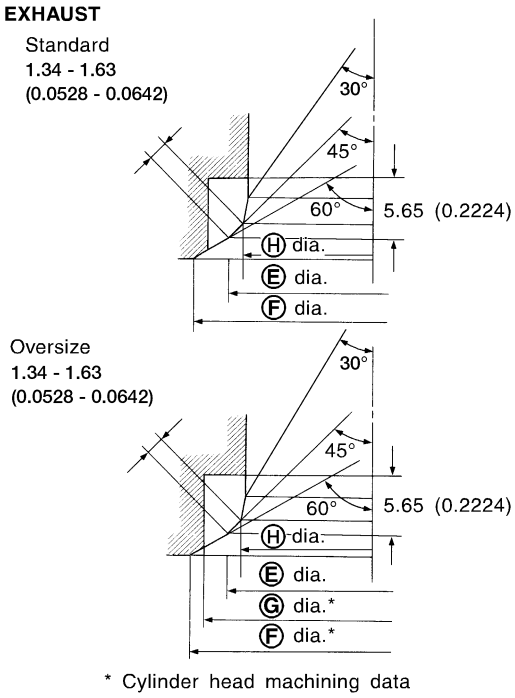

Dia.	Specification	Dia.	Specification
A	27.8 - 28.0 (1.094 - 1.102)	E	24.5 - 24.7 (0.965 - 0.972)
B	29.5 - 29.7 (1.161 - 1.169)	F	26.500 - 26.516 (1.0433 - 1.0439)
C	31.9 - 32.1 (1.256 - 1.264)	G	26.2 - 26.4 (1.031 - 1.039)
D	31.500 - 31.516 (1.2402 - 1.2408)	H	22.4 - 22.6 (0.8819 - 0.8898)

VALVE SEAT RESURFACE LIMIT

NIEM0072S08
Unit: mm (in)

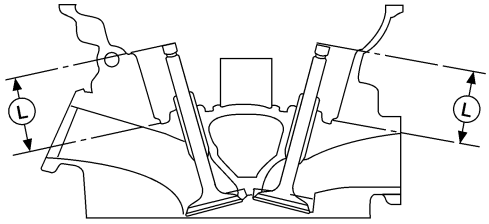

AEM343

Depth (L)	Intake	35.95 - 36.55 (1.4154 - 1.4390)
	Exhaust	35.92 - 36.52 (1.4142 - 1.4378)

Camshaft and Camshaft Bearing

NIEM0073

Unit: mm (in)

Cam height “A”	Intake	40.565 - 40.755 (1.5970 - 1.6045)
	Exhaust	40.056 - 40.246 (1.5770 - 1.5845)
Cam wear limit		0.20 (0.0079)

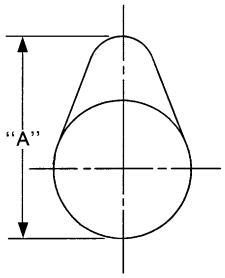

EM671

		Standard	Limit
Camshaft journal to bearing clearance		Intake: 0.030 - 0.071 (0.0012 - 0.0028) Exhaust: 0.045 - 0.086 (0.0018 - 0.0034)	Intake: 0.135 (0.0053) Exhaust: 0.150 (0.0059)
Inner diameter of camshaft bearing	No. 1	28.000 - 28.021 (1.1024 - 1.1032)	—
	No. 2 to No. 5	Intake: 23.985 - 24.006 (0.9443 - 0.9451) Exhaust: 24.000 - 24.021 (0.9449 - 0.9457)	
Outer diameter of camshaft journal	No. 1	27.935 - 27.955 (1.0998 - 1.1006)	—
	No. 2 to No. 5	23.935 - 23.955 (0.9423 - 0.9431)	
Camshaft runout [TIR*]		Less than 0.02 (0.0008)	0.1 (0.004)
Camshaft end play		0.115 - 0.188 (0.0045 - 0.0074)	0.20 (0.0079)

*Total indicator reading

Cylinder Block

NIEM0074
Unit: mm (in)

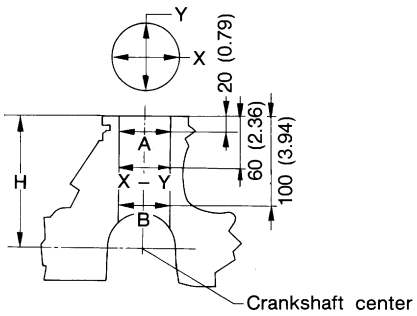

SEM171D

			Standard	Limit
Surface flatness			Less than 0.03 (0.0012)	0.1 (0.004)
Height “H” (nominal)			213.95 - 214.05 (8.4232 - 8.4271)	—
Cylinder bore inner diameter	Standard	Grade No. 1	80.000 - 80.010 (3.1496 - 3.1500)	0.2 (0.008)
		Grade No. 2	80.010 - 80.020 (3.1500 - 3.1504)	
		Grade No. 3	80.020 - 80.030 (3.1504 - 3.1508)	
	Out-of-round (X − Y)		Less than 0.015 (0.0006)	—
	Taper (A − B)		Less than 0.01 (0.0004)	—
	Difference in inner diameter between cylinders		0.05 (0.0020)	0.2 (0.008)

Piston, Piston Ring and Piston Pin

NIEM0075

PISTON

NIEM0075S01
Unit: mm (in)

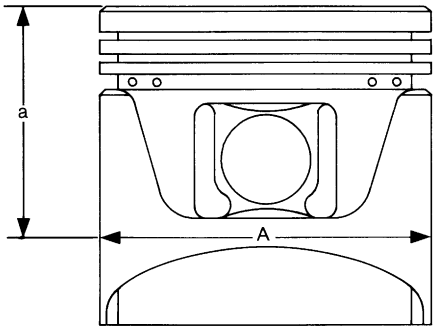

SEM882E

Piston skirt diameter “A”	Standard	Grade No. 1	79.965 - 79.975 (3.1482 - 3.1486)
		Grade No. 2	79.975 - 79.985 (3.1486 - 3.1490)
		Grade No. 3	79.985 - 79.995 (3.1490 - 3.1494)
	0.25 (0.0098) oversize (service)		80.215 - 80.245 (3.1581 - 3.1592)
	0.5 (0.020) oversize (service)		80.465 - 80.495 (3.1679 - 3.1691)
“a” dimension			42.3 (1.665)
Piston pin hole inner diameter			18.993 - 19.005 (0.7478 - 0.7482)
Piston to bore clearance			0.025 - 0.045 (0.0010 - 0.0018)

PISTON RING

NIEM0075S02
Unit: mm (in)

		Standard	Limit
Side clearance	Top	0.045 - 0.080 (0.0018 - 0.0031)	0.2 (0.008)
	2nd	0.030 - 0.070 (0.0012 - 0.0028)	
	Oil	0.065 - 0.135 (0.0026 - 0.0053)	
End gap	Top	0.20 - 0.39 (0.0079 - 0.0154)	0.49 (0.0193)
	2nd	0.32 - 0.56 (0.0126 - 0.0220)	0.64 (0.0252)
	Oil	0.20 - 0.69 (0.0079 - 0.0272)	1.09 (0.0429)

PISTON PIN

NIEM0075S03
Unit: mm (in)

Piston pin outer diameter		18.989 - 19.001 (0.7476 - 0.7481)
Piston pin to piston clearance		0.002 - 0.006 (0.0001 - 0.0002)
Piston pin to connecting rod bushing clearance (small end)	Standard	0.005 - 0.017 (0.0002 - 0.0007)
	Limit	0.023 (0.0009)

Connecting Rod

NIEM0076
Unit: mm (in)

Center distance		140.45 - 140.55 (5.5295 - 5.5335)
Bend limit [per 100 (3.94)]		0.15 (0.0059)
Torsion limit [per 100 (3.94)]		0.3 (0.012)
Connecting rod bushing inner diameter* (small end)		19.000 - 19.012 (0.7480 - 0.7485)
Connecting rod big end inner diameter		43.000 - 43.013 (1.6929 - 1.6934)
Side clearance	Standard	0.200 - 0.470 (0.0079 - 0.0185)
	Limit	0.52 (0.0205)

*After installing in connecting rod

Crankshaft

NIEM0077
Unit: mm (in)

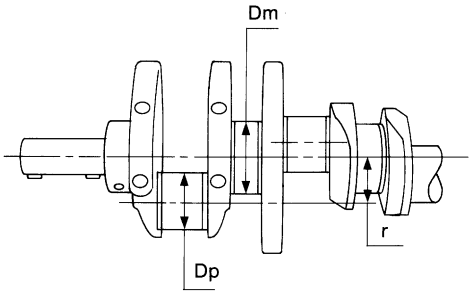

SEM954C

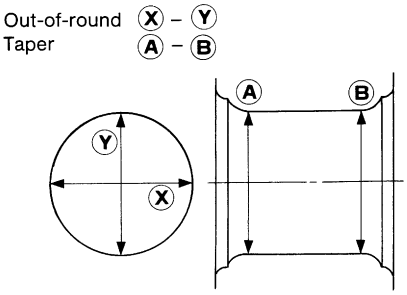

EM715

Main journal dia. “Dm”	Grade No. 0	49.956 - 49.964 (1.9668 - 1.9671)
	Grade No. 1	49.948 - 49.956 (1.9665 - 1.9668)
	Grade No. 2	49.940 - 49.948 (1.9661 - 1.9665)
Pin journal dia. “Dp”	Grade No. 0	39.968 - 39.974 (1.5735 - 1.5738)
	Grade No. 1	39.962 - 39.968 (1.5733 - 1.5735)
	Grade No. 2	39.956 - 39.962 (1.5731 - 1.5733)
Center distance “r”		43.95 - 44.05 (1.7303 - 1.7342)
Out-of-round (X − Y)	Standard	Less than 0.003 (0.0001)
	Limit	Less than 0.005 (0.0002)
Taper (A − B)	Standard	Less than 0.004 (0.0002)
	Limit	Less than 0.005 (0.0002)
Runout [TIR*]	Standard	Less than 0.04 (0.0016)
	Limit	Less than 0.05 (0.0020)
Free end play	Standard	0.060 - 0.220 (0.0024 - 0.0087)
	Limit	0.3 (0.012)

*: Total indicator reading

Main Bearing

=NIEM0078

STANDARD

NIEM0078S01

Grade No.	Thickness “T” mm (in)	Identification color
0	1.827 - 1.831 (0.0719 - 0.0720)	Black
1	1.831 - 1.835 (0.0720 - 0.0722)	Brown
2	1.835 - 1.839 (0.0722 - 0.0724)	Green
3	1.839 - 1.843 (0.0724 - 0.0725)	Yellow
4	1.843 - 1.847 (0.0725 - 0.0727)	Blue

UNDERSIZE

NIEM0078S02

Unit: mm (in)

	Thickness “T”
0.25 (0.0098)	1.960 - 1.964 (0.0772 - 0.0773)
0.50 (0.0197)	2.085 - 2.089 (0.0821 - 0.0822)

Connecting Rod Bearing

NIEM0079

STANDARD SIZE

NIEM0079S01

Unit: mm (in)

Grade No.	Thickness	Identification color or number
0	1.503 - 1.506 (0.0592 - 0.0593)	—
1	1.506 - 1.509 (0.0593 - 0.0594)	Brown
2	1.509 - 1.512 (0.0594 - 0.0595)	Green

UNDERSIZE

NIEM0079S02

Unit: mm (in)

Grade No.	Thickness	Identification color or number
0.08 (0.0031)	1.542 - 1.546 (0.0607 - 0.0609)	—
0.12 (0.0047)	1.562 - 1.566 (0.0615 - 0.0617)	—
0.25 (0.0098)	1.627 - 1.631 (0.0641 - 0.0642)	—

Bearing Clearance

NIEM0080

Unit: mm (in)

Main bearing clearance	Standard	0.018 - 0.042 (0.0007 - 0.0017)
	Limit	0.1 (0.004)
Connecting rod bearing clearance	Standard	0.014 - 0.039 (0.0006 - 0.0015)
	Limit	0.1 (0.004)

Miscellaneous Components

NIEM0081

Unit: mm (in)

Flywheel runout [TIR*]	Less than 0.15 (0.0059)
Drive plate runout [TIR*]	Less than 0.2 (0.008)
Camshaft sprocket runout [TIR*]	Less than 0.15 (0.0059)

*: Total indicator reading at measuring point 115 mm (4.53 in) from crankshaft center.

Parts Requiring Angular Tightening

NIEM0001

- Use an angle wrench for the final tightening of the following engine parts:

a) Cylinder head bolts
b) Main bearing cap bolts
c) Connecting rod cap nuts

- Do not use a torque value for final tightening.
- The torque value for these parts are for a preliminary step.
- Ensure thread and seat surfaces are clean and coated with engine oil.

Liquid Gasket Application Procedure

NIEM0002

1. **Use a scraper to remove old RTV silicone sealant from mating surfaces and grooves. Also, completely clean any oil from these areas.**
2. **Apply a continuous bead of RTV silicone sealant to mating surfaces. (Use Genuine RTV silicone sealant Part No. 999MP-A7007 or equivalent.)**
   - **For oil pan, be sure RTV silicone sealant diameter is 4.0 to 5.0 mm (0.157 to 0.197 in).**
   - **For areas except oil pan, be sure RTV silicone sealant diameter is 2.0 to 3.0 mm (0.079 to 0.118 in).**
3. **Apply RTV silicone sealant around the inner side of bolt holes (unless otherwise specified).**
4. **Assembly should be done within 5 minutes after coating.**
5. **Wait at least 30 minutes before refilling engine oil and engine coolant.**

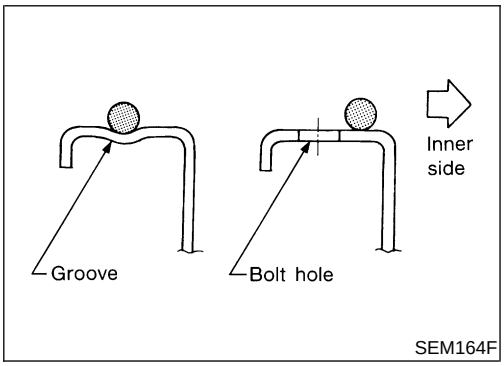

SEM164F

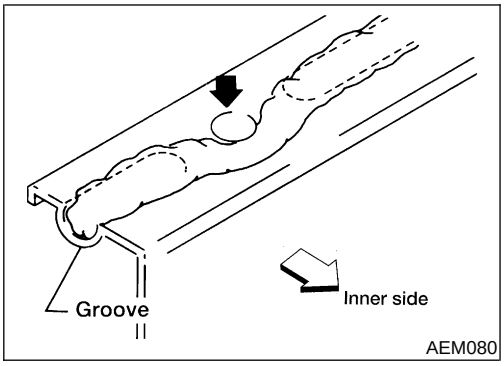

AEM080

Special Service Tools

NIEM0003

The actual shapes of Kent-Moore tools may differ from those of special service tools illustrated here.

Tool number (Kent-Moore No.) Tool name	Description	
ST0501S000 (—) Engine stand assembly 1 ST05011000 (—) Engine stand 2 ST05012000 (—) Base	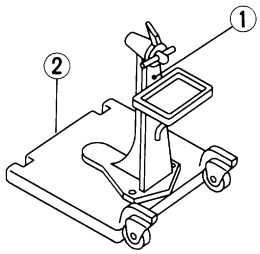 NT042	Disassembling and assembling
KV10106500 (—) Engine stand shaft	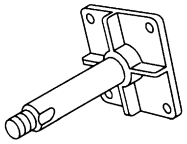 NT028	
KV10115300 (—) Engine sub-attachment	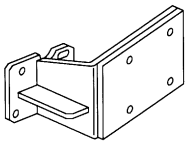 NT008	
ST10120000 (J24239-01) Cylinder head bolt wrench	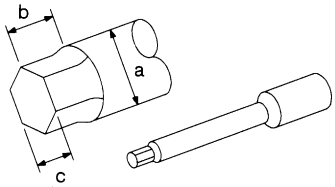 NT583	Loosening and tightening cylinder head bolt **a: 13 (0.51) dia.** **b: 12 (0.47)** **c: 10 (0.39)** Unit: mm (in)
KV10116200 (J26336-B) Valve spring compressor 1 KV10115900 (J26336-20) Attachment	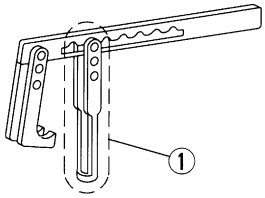 NT022	Disassembling valve mechanism
KV10115600 (J38958) Valve oil seal drift	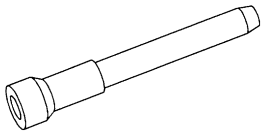 NT024	Installing valve oil seal
KV10107902 (J38959) Valve oil seal puller	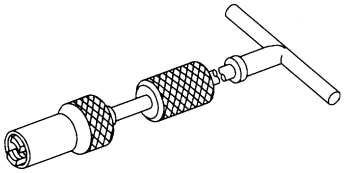 NT011	Displacement valve lip seal

Tool number (Kent-Moore No.) Tool name	Description
KV10115700 (J38957) Dial gauge stand	Adjusting shims 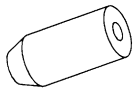 NT012
(J38957-N) Valve shim gauge plate kit 1 — (J35772) Plastic case 2 — (J38957-8) Dial indicator 3 — (J38957-2) Collar 4 — (J38957-1) Plate 5 — (—) Hex bolts	Measuring valve shims 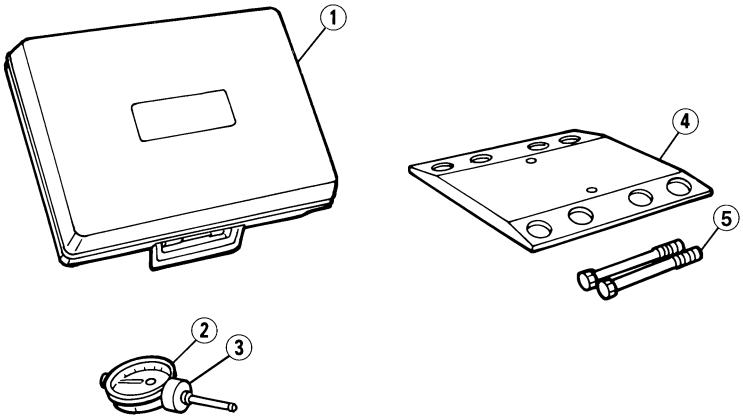 AEM274
EM03470000 (J8037) Piston ring compressor	Installing piston assembly into cylinder bore 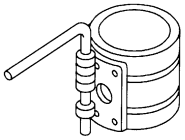 NT044
KV10107400 (J26365-12, J26365) Piston pin press stand 1 KV10107310 (—) Center shaft 2 ST13040020 (—) Stand 3 ST13040030 (—) Spring 4 KV10107320 (—) Cap 5 ST13040050 (—) Drift	Disassembling and assembling piston pin 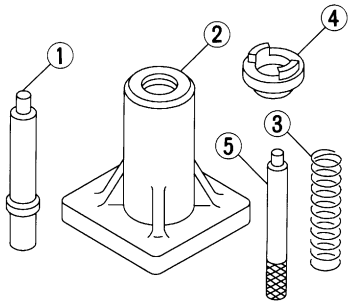 NT013
KV10111100 (J37228) Seal cutter	Removing oil pan 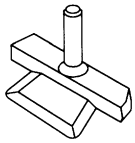 NT046

Special Service Tools (Cont'd)

Tool number (Kent-Moore No.) Tool name	Description	
WS39930000 (—) Tube presser	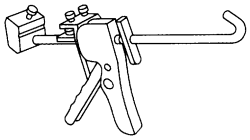 NT052	Pressing the tube of liquid gasket
KV10112100 (BT-8653-A) Angle wrench	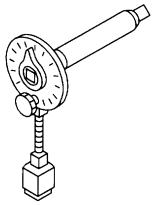 NT014	Tightening bolts for bearing cap, cylinder head, etc.
ST16610001 (J23907) Pilot bushing puller	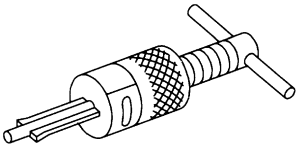 NT045	Removing pilot bushing
(J36471-A) Front (heated) oxygen sensor wrench	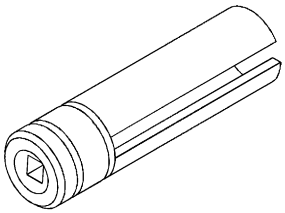 NT379	Loosening or tightening front (heated) oxygen sensor

Commercial Service Tools

NIEM0004

Tool number (Kent-Moore No.) Tool name	Description	
(J-43897–18) (J-43897–12) Oxygen sensor thread cleaner	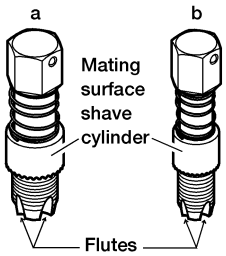 \ AEM488	Reconditioning the exhaust system threads before installing a new oxygen sensor (Use with anti-seize lubricant shown below.) **a: J-43897-18 [18 mm dia.] for zirconia oxygen sensor** **b: J-43897-12 [12 mm dia.] for titania oxygen sensor**
Anti-seize lubricant (Permatex 133AR or equivalent meeting MIL specification MIL-A-907)	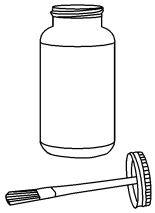 AEM489	Lubricating oxygen sensor thread cleaning tool when reconditioning exhaust system threads

Tool number (Kent-Moore No.) Tool name	Description	
Spark plug wrench	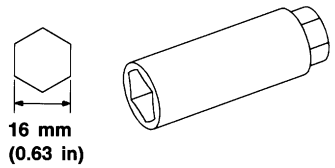 NT047	Removing and installing spark plug
Valve seat cutter set	 NT048	Finishing valve seat dimensions
Piston ring expander	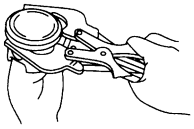 NT030	Removing and installing piston ring
Valve guide drift	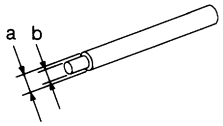 NT015	Removing and installing valve guide **Intake & Exhaust:** **a: 9.5 mm (0.374 in) dia.** **b: 5.0 mm (0.197 in) dia.**
Valve guide reamer	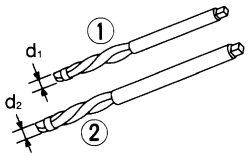 NT016	Reaming valve guide 1 or hole for oversize valve guide 2 **Intake & Exhaust:** **d_1: 6.0 mm (0.236 in) dia.** **d_2: 10.175 mm (0.4006 in) dia.**
Front oil seal drift	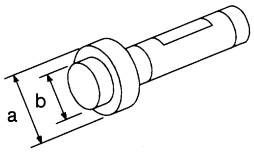 NT049	Installing front oil seal **a: 75 mm (2.95 in) dia.** **b: 45 mm (1.77 in) dia.**
Rear oil seal drift	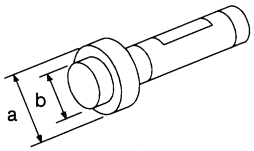 NT049	Installing rear oil seal **a: 110 mm (4.33 in) dia.** **b: 80 mm (3.15 in) dia.**

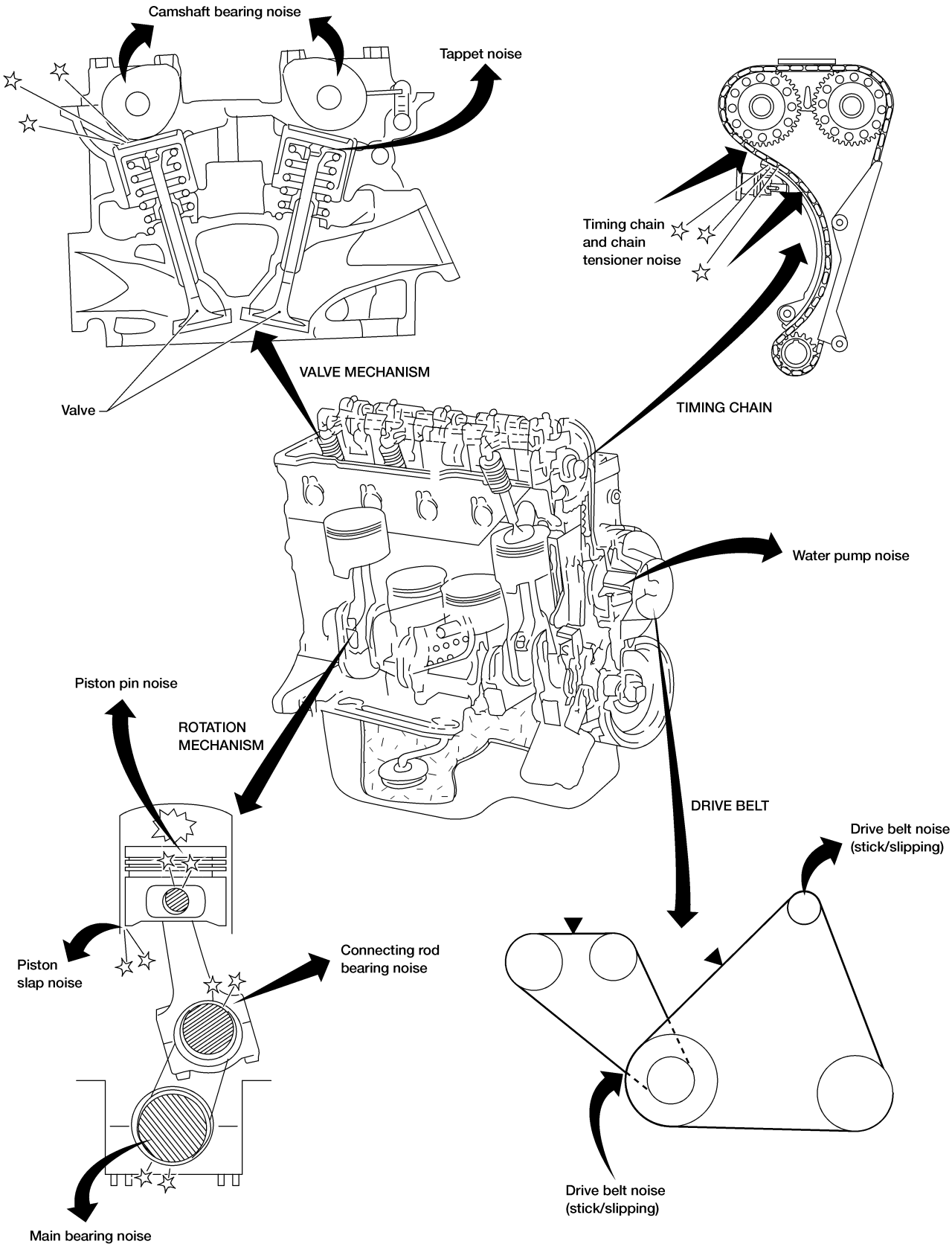
Camshaft bearing noise
Tappet noise
Valve
VALVE MECHANISM
Timing chain
and chain
tensioner noise
TIMING CHAIN
Water pump noise
Piston pin noise
ROTATION
MECHANISM
DRIVE BELT
Drive belt noise
(stick/slipping)
Piston
slap noise
Connecting rod
bearing noise
Drive belt noise
(stick/slipping)
Main bearing noise

AEM400

Use the table below to help you find the cause of the symptom.

1. Locate the area where noise occurs.
2. Confirm the type of noise.
3. Specify the operating condition of the engine.
4. Check the specified noise source.

If necessary, repair or replace these parts.

NVH Troubleshooting — Engine Noise

NIEM0005S01

Location of noise	Type of noise	Operating condition of engine						Source of noise	Check item	Reference page
		Before warm-up	After warm-up	When start-ing	When idling	When racing	While driv-ing			
Top of engine Rocker cover Cylinder head	Ticking or clicking	C	A	—	A	B	—	Tappet noise	Hydraulic lash adjuster	EM-116
	Rattle	C	A	—	A	B	C	Camshaft bearing noise	Camshaft journal clear-ance Camshaft runout	EM-111, 111
Crankshaft pulley Cylinder Block (Side of engine) Oil pan	Slap or knock	—	A	—	B	B	—	Piston pin noise	Piston and piston pin clearance Connecting rod bushing clearance	EM-132, 138
	Slap or rap	A	—	—	B	B	A	Piston slap noise	Piston-to-bore clearance Piston ring side clearance Piston ring end gap Connecting rod bend and torsion	EM-134, 132, 133, 133
	Knock	A	B	C	B	B	B	Connecting rod bearing noise	Connecting rod bearing clearance (Big end) Connecting rod bushing clearance (Small end)	EM-137, 138
	Knock	A	B	—	A	B	C	Main bearing noise	Main bearing clearance Crankshaft runout	EM-135, 135
Front of engine Timing chain cover	Tapping or ticking	A	A	—	B	B	B	Timing chain and chain tensioner noise	Timing chain cracks and wear	EM-98
Front of engine	Squeak-ing or fizzing	A	B	—	B	—	C	Other drive belts (Stick-ing or slip-ping)	Drive belt deflection	***MA-25***, “Checking Drive Belts”
	Creaking	A	B	A	B	A	B	Other drive belts (Slip-ping)	Idler pulley bearing operation	
	Squall Creak	A	B	—	B	A	B	Water pump noise	Water pump operation	***LC-30***, “INSPEC-TION”

A: Closely related B: Related C: Sometimes related —: Not related

Removal and Installation

NIEM0006

SEC.140•150•210•220•221•233•493

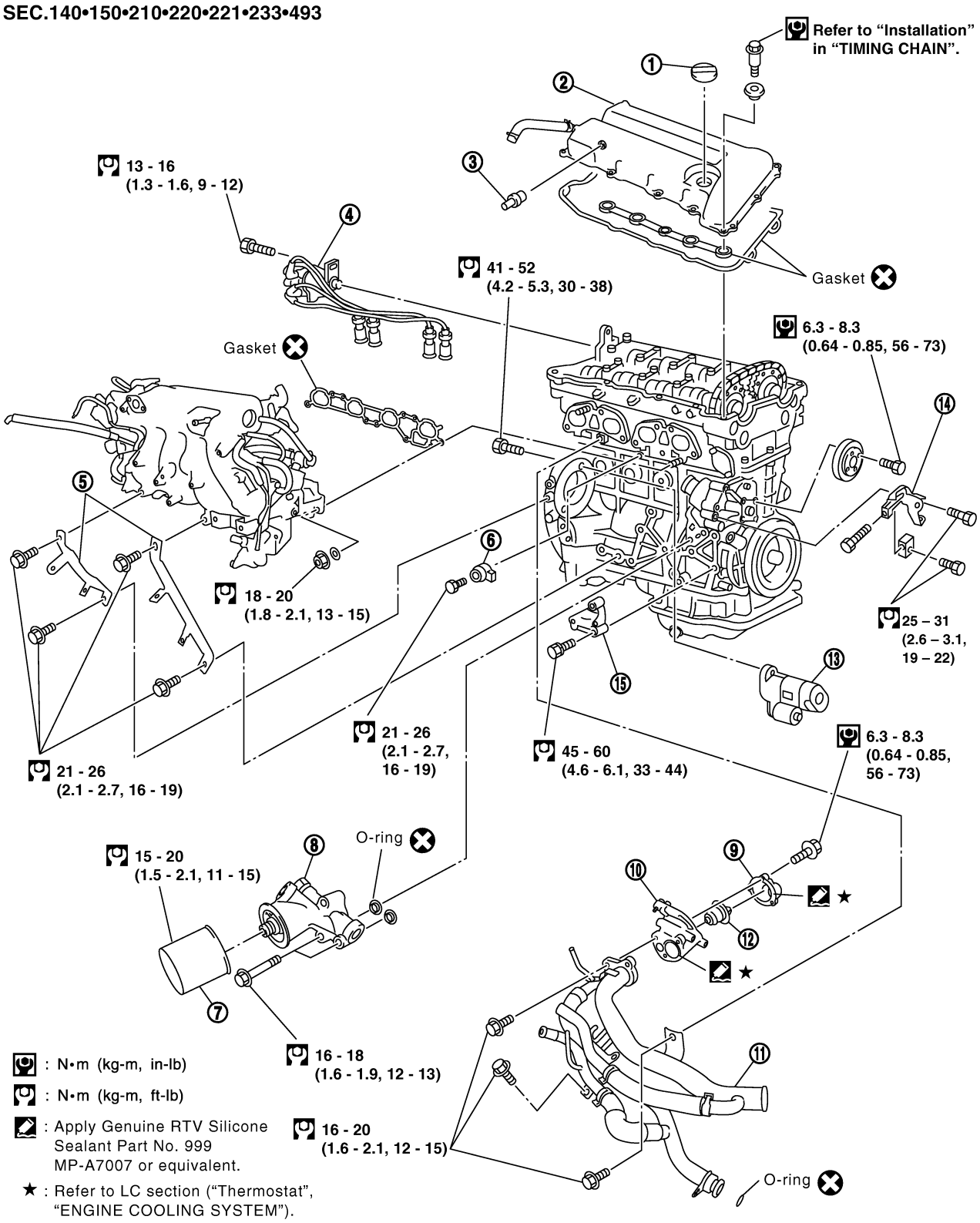

WEM075

1. Oil filler cap
2. Rocker cover
3. PCV valve
4. Distributor
5. Intake manifold supports
6. Knock sensor
7. Oil filter
8. Oil filter bracket
9. Water inlet
10. Thermostat housing
11. Water pipe assembly
12. Thermostat
13. Starter motor
14. Power steering oil pump adjusting bar
15. Power steering oil pump bracket

SEC. 140•146•147•148•163•164•210•226

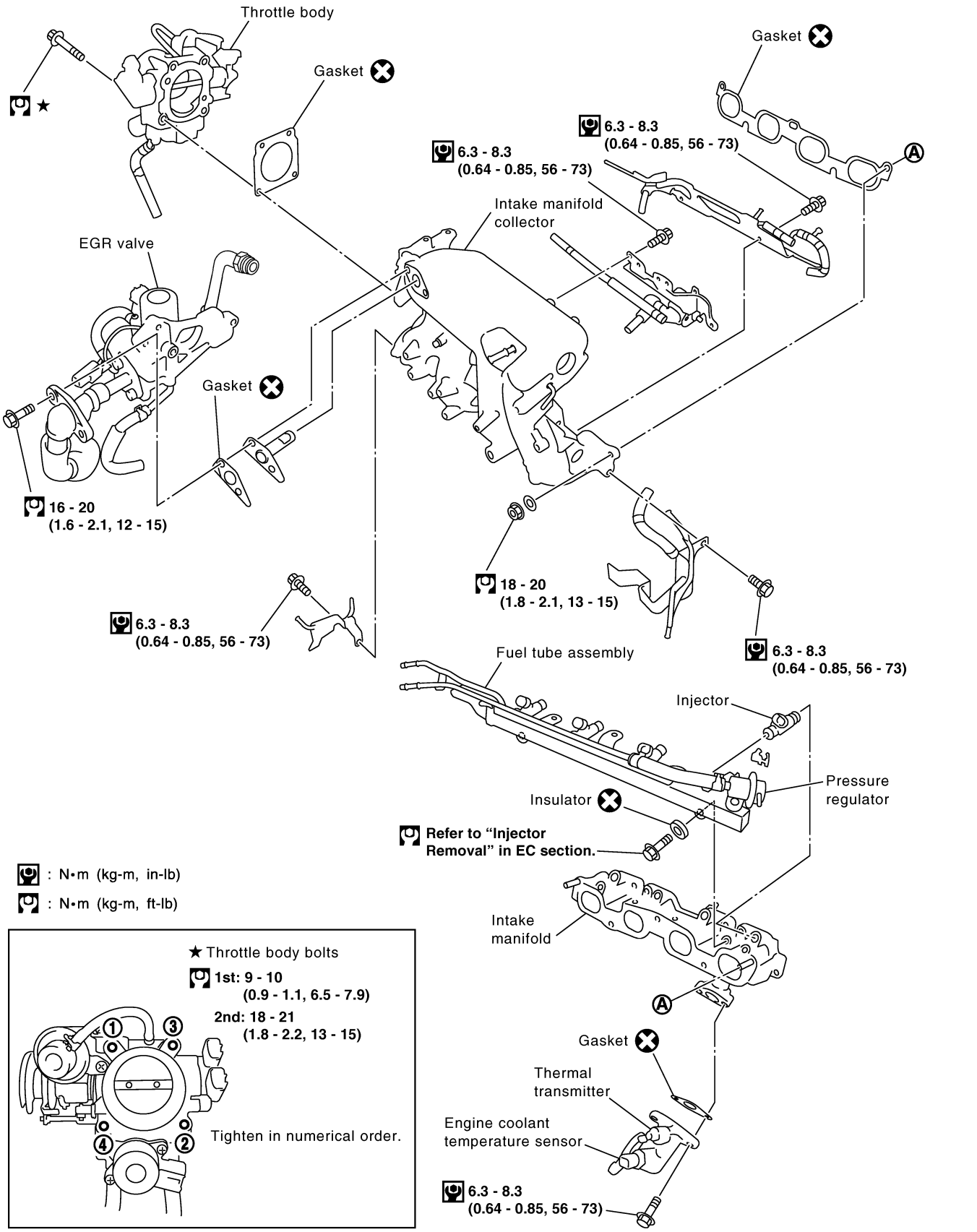

SEC. 140•230•275

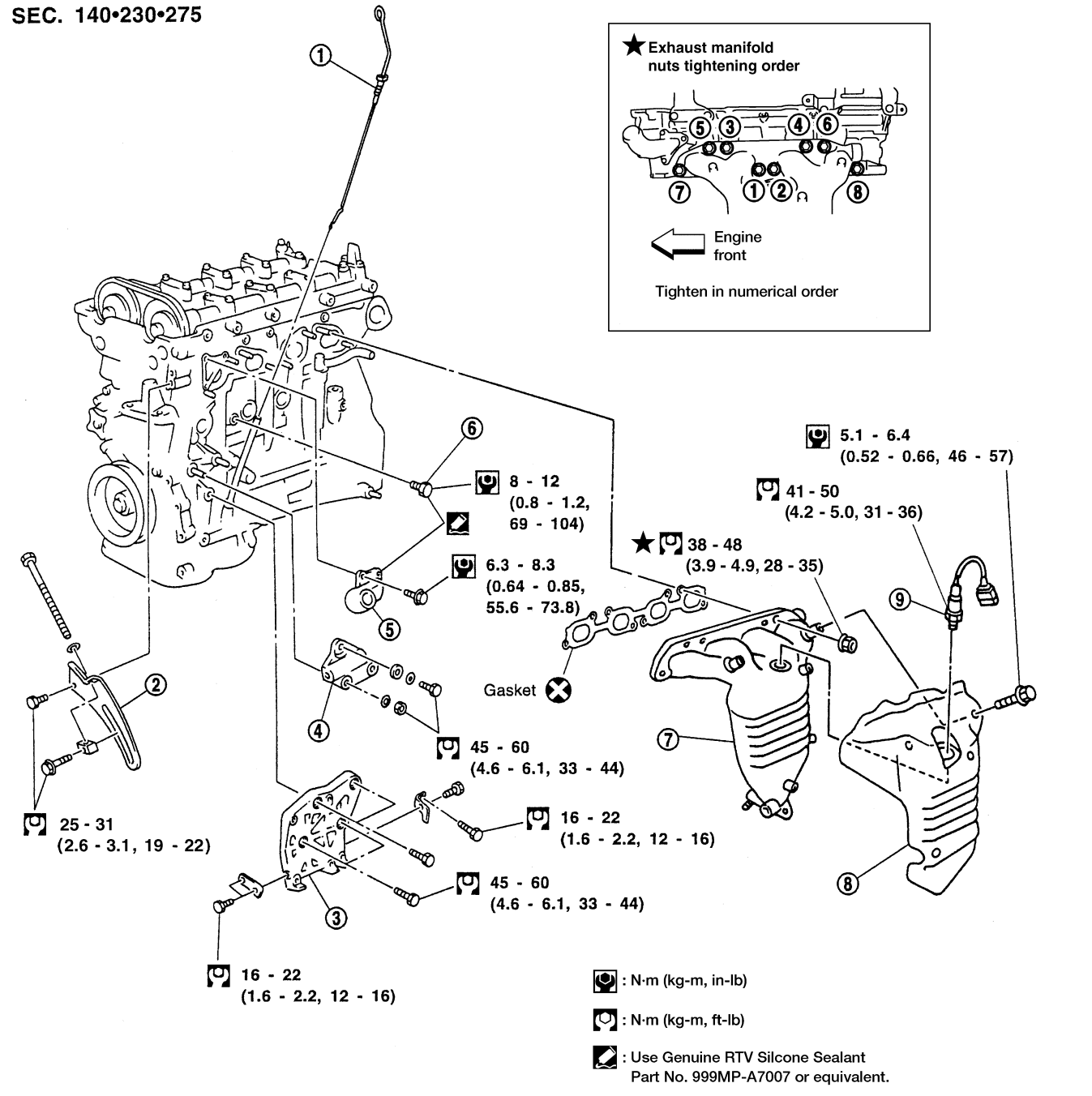

1. Oil level gauge
2. Generator adjusting bar
3. A/C compressor bracket
4. Generator bracket
5. Water outlet
6. Cylinder block drain plug
7. Exhaust manifold (With three way catalyst)
8. Exhaust manifold cover
9. Heated oxygen sensor 1 (Front)

MEASUREMENT OF COMPRESSION PRESSURE

1. Warm up engine.
2. Turn ignition switch OFF.
3. Release fuel pressure.
   Refer to ***EC-1403*** (SR20DE), “Fuel Pressure Release”.
4. Remove all spark plugs.
5. Disconnect distributor coil harness connector.

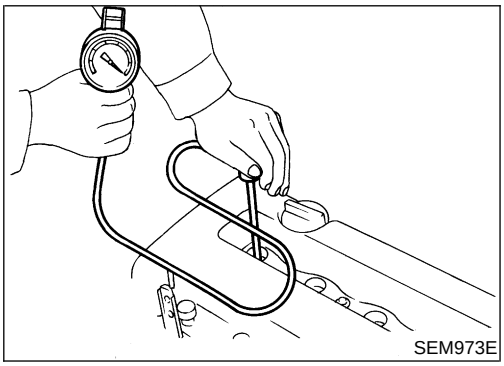
SEM973E


20 mm (0.79 in) dia.

Use compressor tester whose end (rubber portion) is less than 20 mm (0.79 in) dia. Otherwise, it may be caught by cylinder head during removal.

SEM387C

6. Attach a compression tester to No. 1 cylinder.
7. Depress accelerator pedal fully to keep throttle valve wide open.
8. Crank engine and record highest gauge indication.
9. Repeat the measurement on each cylinder.

- **Always use a fully-charged battery to obtain specified engine speed.**

Compression pressure: kPa (kg/cm^2, psi)/rpm

Standard

1,275 (13.0, 185)/300

Minimum

1,079 (11.0, 156)/300

Difference limit between cylinders

98 (1.0, 14)/300

10. If compression in one or more cylinders is low, pour a small amount of engine oil into cylinders through spark plug holes and retest compression.

- If adding oil helps compression, piston rings may be worn or damaged. If so, replace piston rings after checking piston.
- **If pressure stays low, a valve may be sticking or seating improperly. Inspect and repair valve and valve seat. Refer to “VALVE SEAT”, EM-147. If valve or valve seat is damaged excessively, replace them.**
- If compression stays low in two cylinders that are next to each other, then the cylinder head gasket may be leaking. If so, replace cylinder head gasket.

11. Install spark plugs and fuel pump fuse.
12. Connect the distributor coil harness connector.
13. Erase DTC if any DTC appears. Refer to ***EC-1433***, “HOW TO ERASE EMISSION-RELATED DIAGNOSTIC INFORMATION”.

Components

NIEM0008

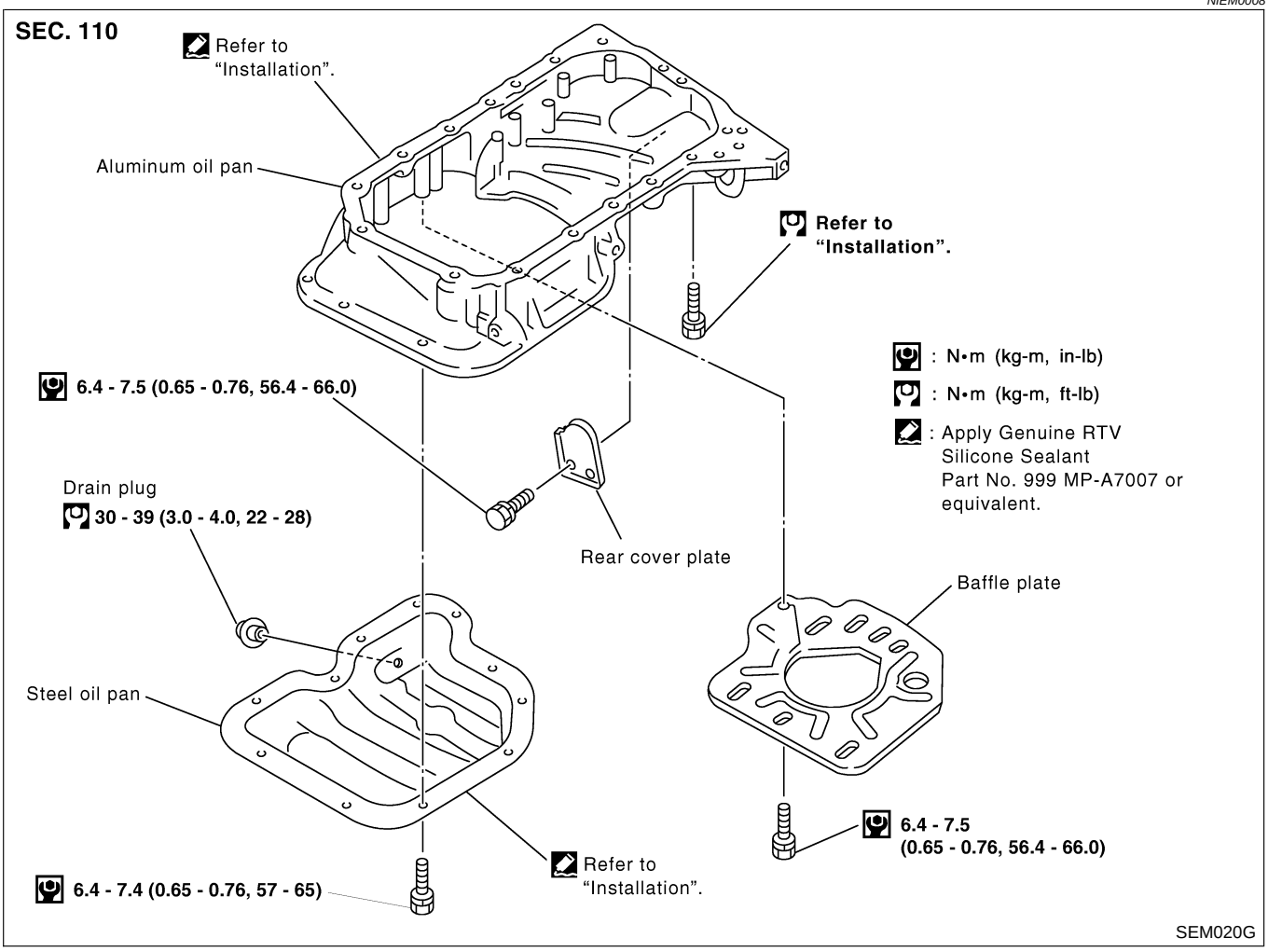

Removal

NIEM0009

1. Remove engine side cover.
2. Drain engine oil.

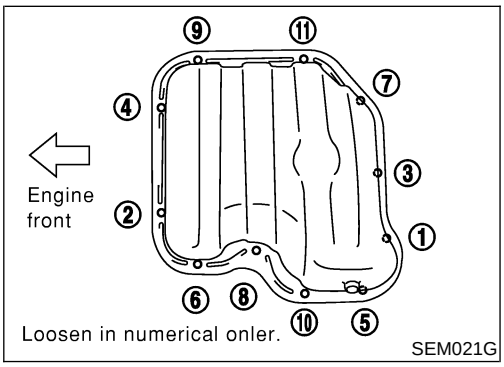

3. Remove steel oil pan bolts in numerical order.

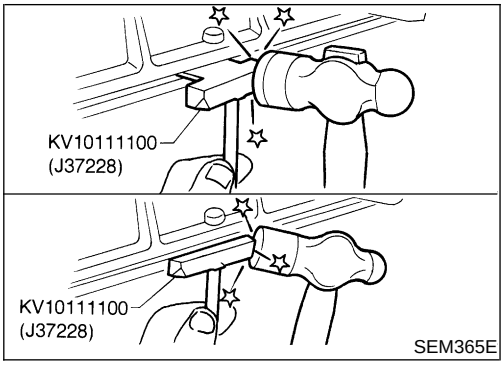

4. Remove steel oil pan.
a. Insert Tool between aluminum oil pan and steel oil pan.
- **Be careful not to damage aluminum mating surface.**
- **Do not insert screwdriver, or oil pan flange will be damaged.**

b. Slide Tool by tapping on the side of the Tool with a hammer.
c. Remove steel oil pan.
5. Remove front exhaust tube. Refer to ***FE-15***, "Removal and Installation".
6. Set a suitable transmission jack under transaxle and lift engine with engine slinger.
7. Remove center member.
8. Remove A/T control cable. (A/T only)

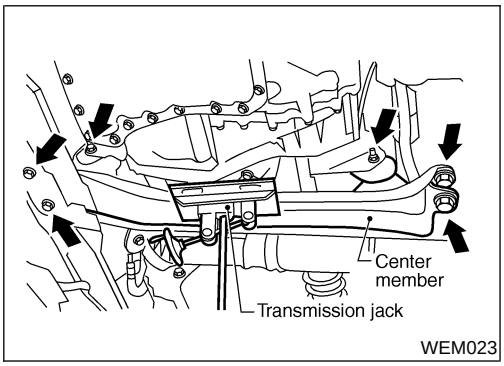

9. Remove A/C compressor gussets.

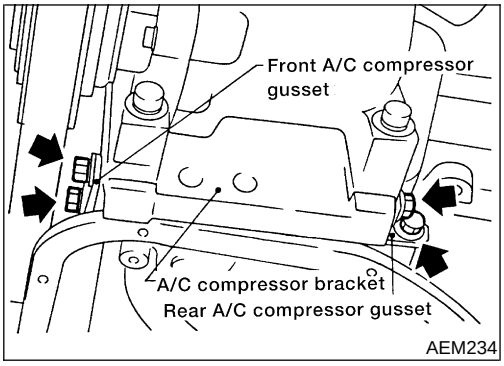

10. Remove rear cover plate.

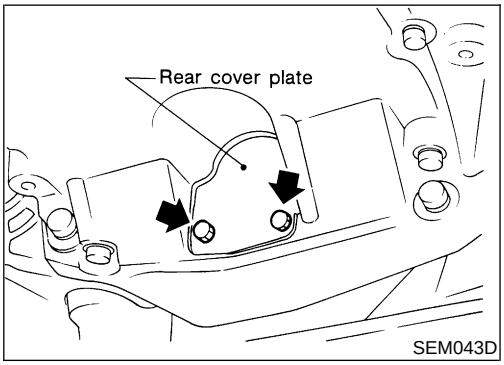

11. Remove aluminum oil pan bolts in numerical order.

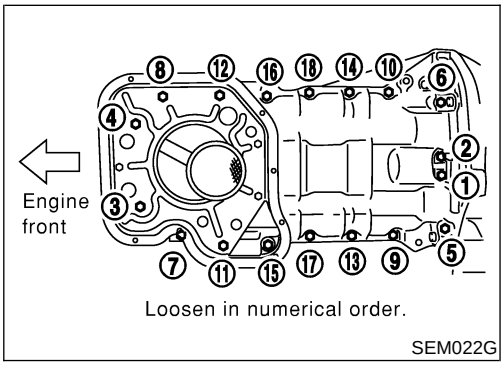

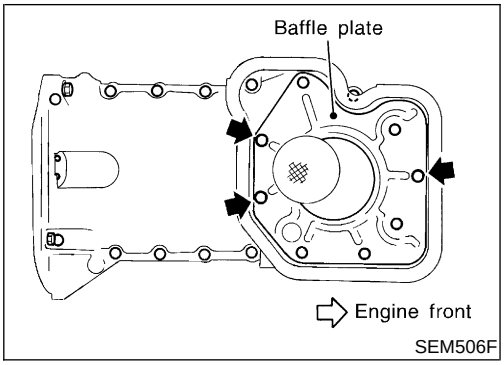

SEM506F

12. Remove baffle plate.

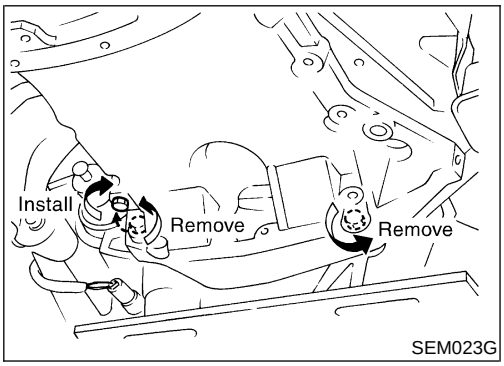

SEM023G

13. Remove two engine-to-transaxle bolts and install one of them into open bolt hole as shown. Tighten installed bolt to separate aluminum oil pan from cylinder block.
14. Remove aluminum oil pan.

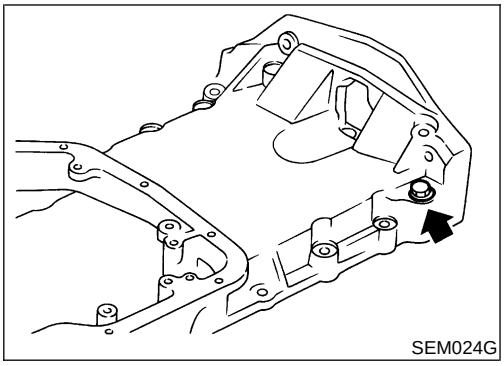
SEM024G

15. Remove the engine-to-transaxle bolt previously installed in aluminum oil pan.

Installation

NIEM0010

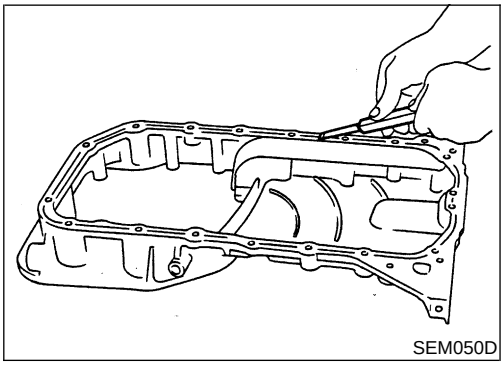
SEM050D

1. Install aluminum oil pan.

a. Use a scraper to remove old RTV silicone sealant from mating surfaces.

- **Also remove old RTV silicone sealant from mating surfaces of cylinder block and front cover.**

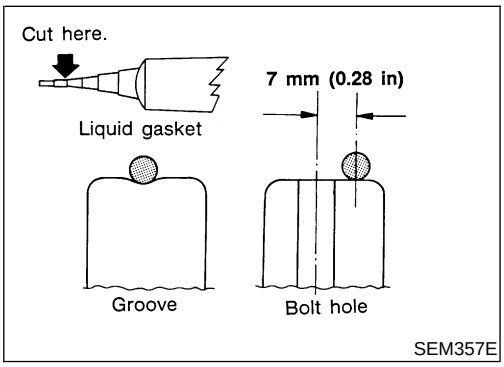

SEM357E

b. Apply a continuous bead of RTV silicone sealant to mating surface of aluminum oil pan.

- **Use Genuine RTV silicone sealant Part No. 999MP-A7007 or equivalent.**
- **Apply to groove on mating surface.**
- **Allow 7 mm (0.28 in) clearance around bolt holes.**

Installation (Cont'd)

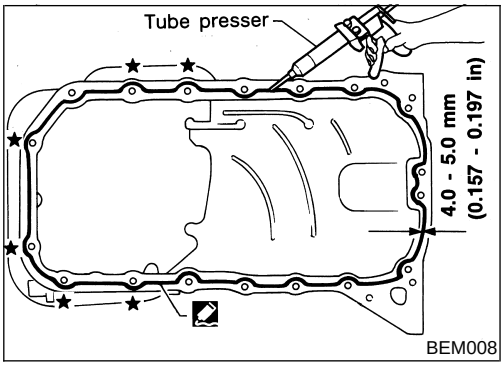

- **For areas marked with "★", apply RTV silicone sealant around the outer side of the bolt hole as shown.**
- **Be sure RTV silicone sealant diameter is 4.0 to 5.0 mm (0.157 to 0.197 in).**
- **Attaching should be done within 5 minutes after coating.**

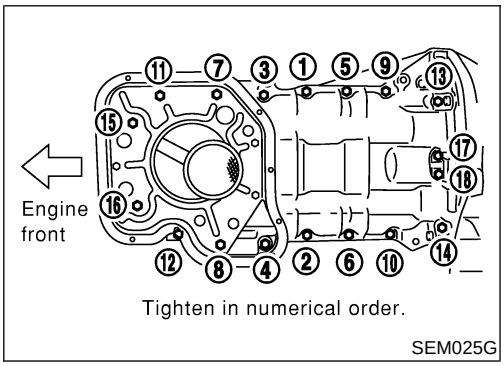

c. Tighten nuts and bolts in numerical order.

Bolts 1 - 16:

: 16 - 19 N·m (1.6 - 1.9 kg-m, 12 - 14 ft-lb)

Bolts 17, 18:

: 6.4 - 7.5 N·m (0.65 - 0.76 kg-m, 56.4 - 66.0 in-lb)

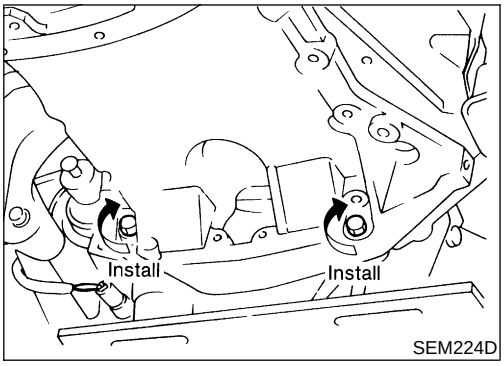

2. Install the two engine-to-transaxle bolts.
For tightening torque, refer to ***MT-15***, "Installation" or ***AT-275***, "Installation".
3. Install rear cover plate.

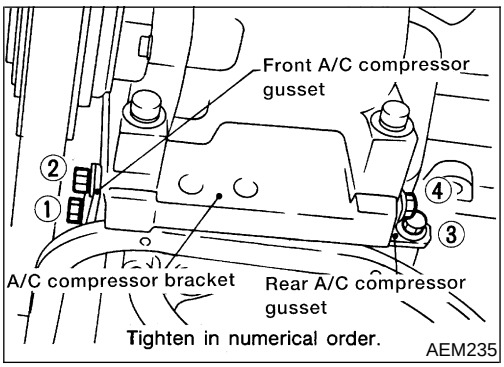

4. Install A/C compressor gussets.
5. Install A/T control cable. (A/T only)
6. Install center member.
7. Install front exhaust tube.
8. Install baffle plate.

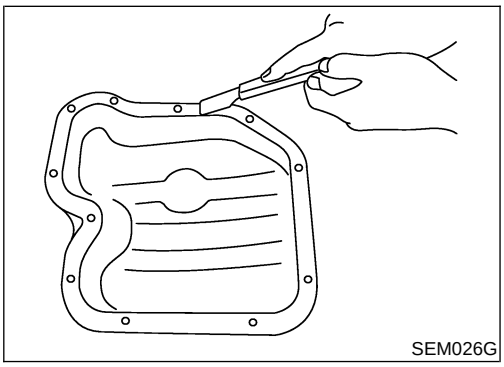

9. Install steel oil pan.

a. Use a scraper to remove old RTV silicone sealant from mating surface of steel oil pan.

- **Also remove old RTV silicone sealant from mating surface of aluminum oil pan.**

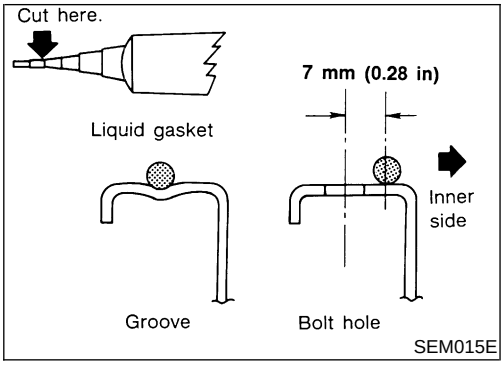

b. Apply a continuous bead of RTV silicone sealant to mating surface of steel oil pan.

- **Use Genuine RTV silicone sealant Part No. 999MP-A7007 or equivalent.**
- **Apply to groove on mating surface.**
- **Allow 7 mm (0.28 in) clearance around bolt hole.**

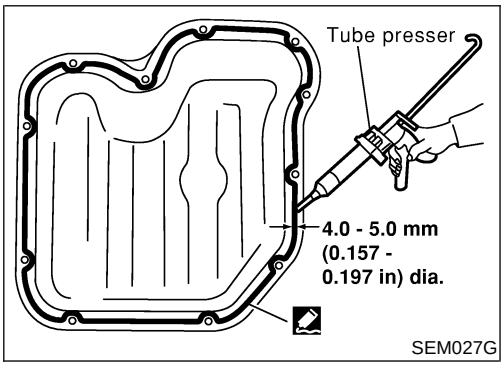

- **Be sure RTV silicone sealant diameter is 4.0 to 5.0 mm (0.157 to 0.197 in).**
- **Attaching should be done within 5 minutes after coating.**

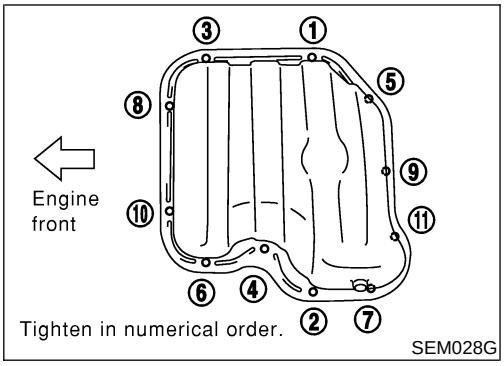

c. Tighten bolts in numerical order as shown.

- **Wait at least 30 minutes before refilling engine oil.**

Components

NIEM0011

CAUTION:

- **After removing timing chain, do not turn crankshaft and camshaft separately, or valves will strike piston heads.**
- **When installing rocker arms, camshafts, chain tensioner, oil seals, or other sliding parts, lubricate contacting surfaces with new engine oil.**
- **Apply new engine oil to bolt threads and seat surfaces when installing cylinder head, camshaft sprockets, crankshaft pulley, and camshaft brackets.**

SEC. 120•130•135

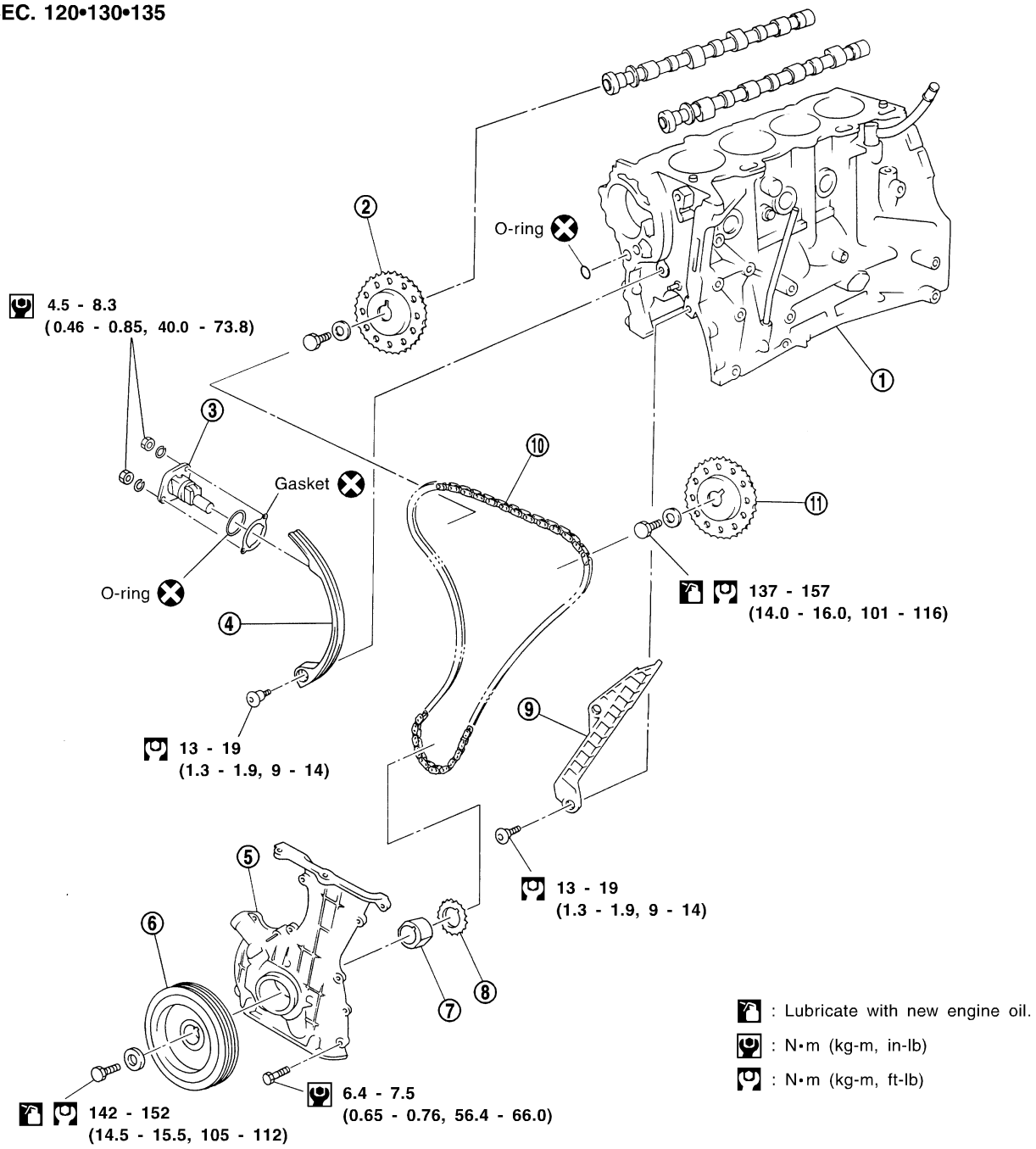

1. Cylinder block
2. RH camshaft sprocket
3. Chain tensioner
4. Chain guide
5. Front cover
6. Crankshaft pulley
7. Oil pump drive spacer
8. Crankshaft sprocket
9. Chain guide
10. Timing chain
11. LH camshaft sprocket

Removal

NIEM0012

1. Remove front RH wheel.
2. Remove front/right-side splash undercover.
3. Remove air duct to intake manifold.
4. Remove A/C compressor. Refer to ***HA-66***, “REMOVAL AND INSTALLATION”.
5. Remove drive belts and water pump pulley.
6. Disconnect the following parts:
- Power brake booster vacuum hose
- Spark plug wires
7. Remove all spark plugs.

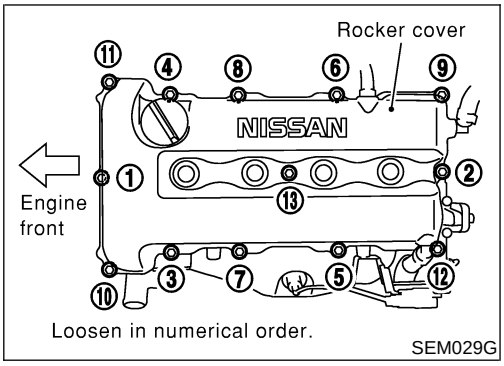

8. Remove rocker cover bolts in numerical order.
9. Remove rocker cover.

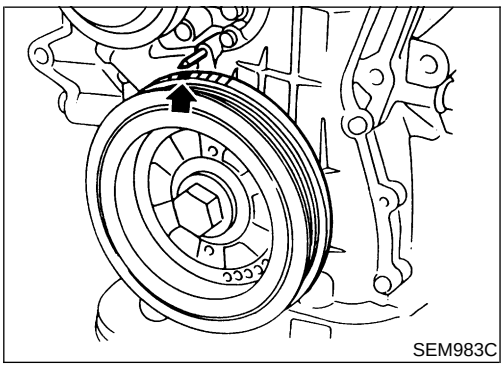

10. Set No. 1 piston at TDC of its compression stroke.

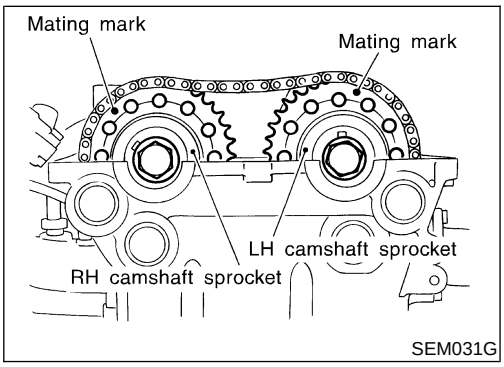

- **Rotate crankshaft until mating mark on camshaft sprocket is set at position indicated in figure.**
11. Remove chain tensioner.

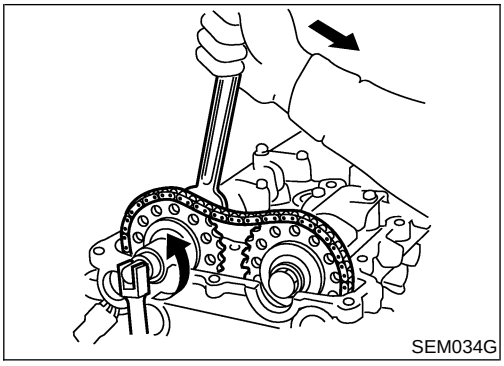
SEM034G

12. Remove camshaft sprockets.
- **For retiming in cylinder head removal, apply paint mark to timing chain matched with mating marks of camshaft sprockets.**

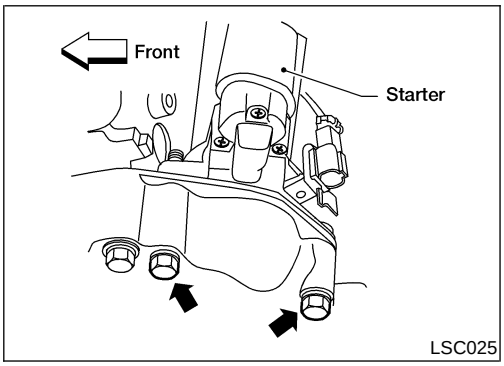

LSC025

13. Remove starter motor.
- Lock flywheel for crankshaft pulley removal.

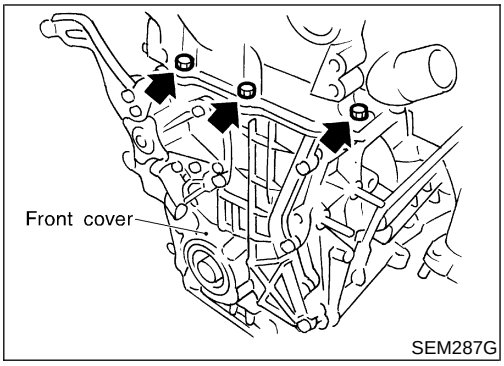

SEM287G

14. Remove cylinder head outside bolts.
15. Remove oil pan.
    Refer to "Components", EM-89.

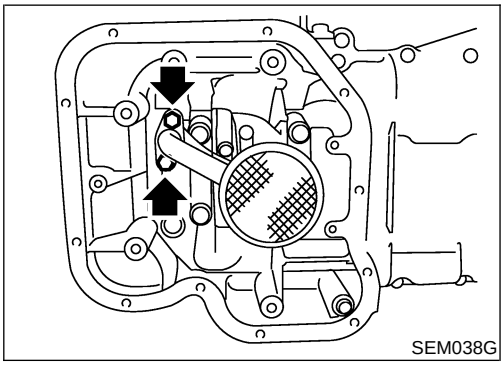
SEM038G

16. Remove oil strainer.

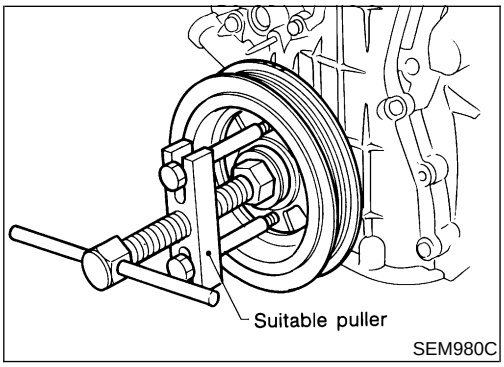

SEM980C

17. Remove crankshaft pulley.

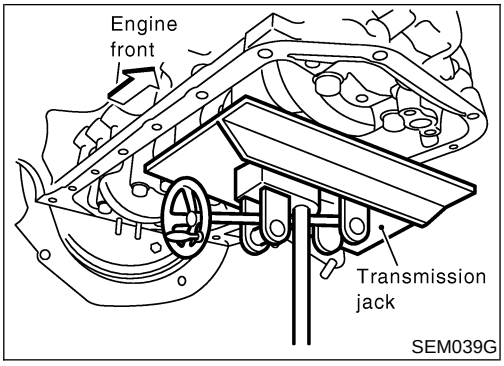

18. Set a suitable transmission jack.
19. Reposition the coolant reservoir aside.

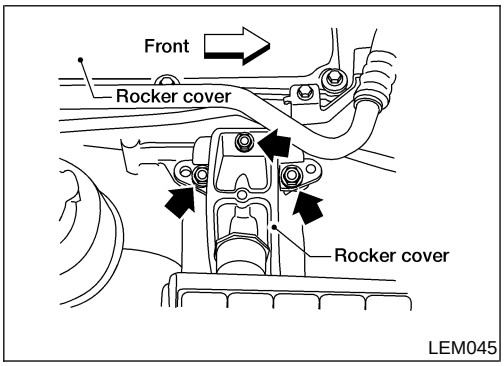

20. Remove RH engine mounting.

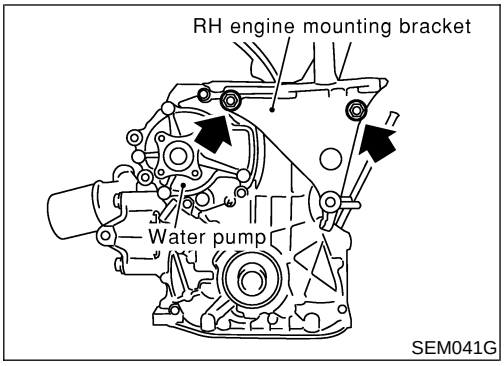

21. Remove RH engine mounting bracket.

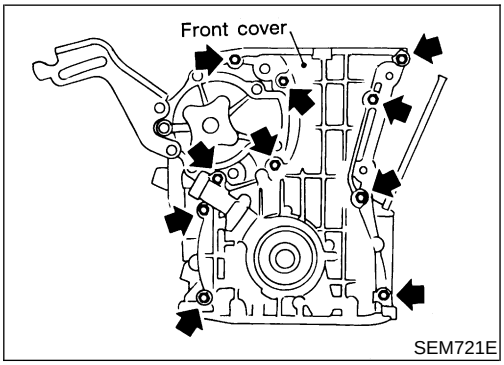

22. Remove front cover and oil pump drive spacer.
- **Be careful not to damage oil pump drive spacer and front oil seal.**
- **Be careful not to tear or damage the cylinder head gasket.**
- **Inspect for oil leakage at front oil seal. Replace seal if oil leak is present.**

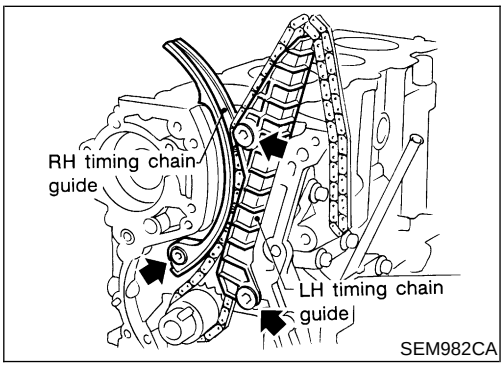

23. Remove timing chain guides and timing chain.
24. Remove the crankshaft sprocket.

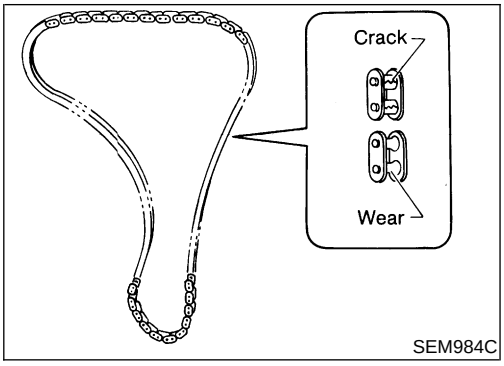

Inspection

NIEM0013

Check for cracks and excessive wear at roller links. Replace chain if necessary.

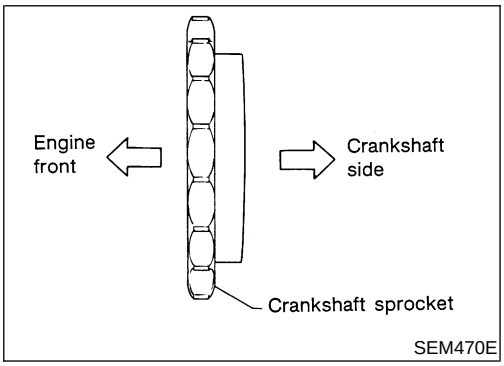

Installation

NIEM0014

1. Install crankshaft sprocket on crankshaft.

- **Make sure that mating marks on crankshaft sprocket face front of engine.**

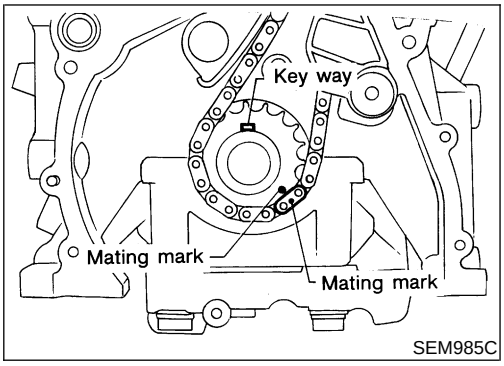

2. Position crankshaft so that No. 1 piston is set at TDC and key way is at 12 o'clock. Fit timing chain on crankshaft sprocket, aligning the mating marks.

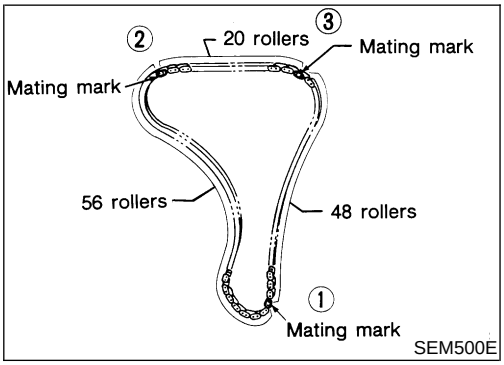

- Mating mark color on timing chain.
  - **1: Yellow**
  - **2, 3: Blue**

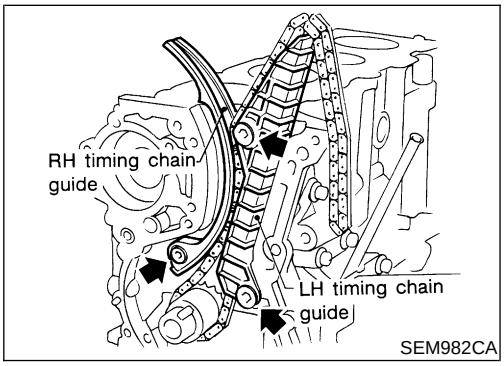

3. Install timing chain and timing chain guides.

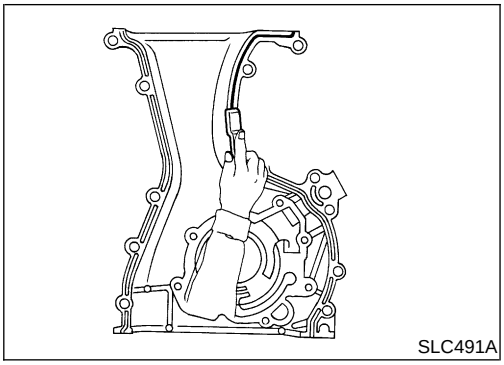
SLC491A

4. Use a scraper to remove old RTV silicone sealant from mating surface of front cover.
- **Also remove old RTV silicone sealant from mating surface of cylinder block.**

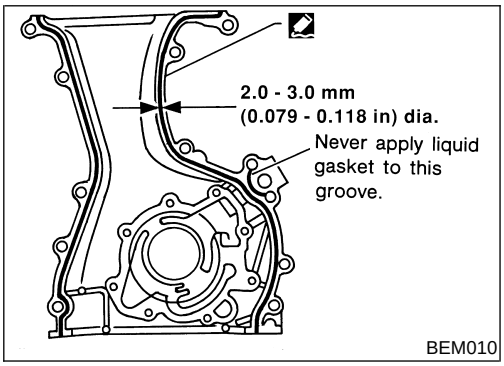

BEM010

5. Apply a continuous bead of RTV silicone sealant to front cover.
- **Also apply liquid gasket to matching surface of cylinder head gasket.**
- **Use Genuine RTV silicone sealant Part No. 999MP-A7007 or equivalent.**
  Be sure to install new front oil seal in the right direction. Refer to "FRONT OIL SEAL", EM-103.

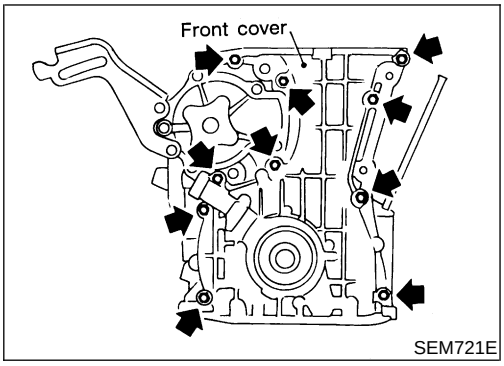

SEM721E

6. Install oil pump drive spacer and front cover.

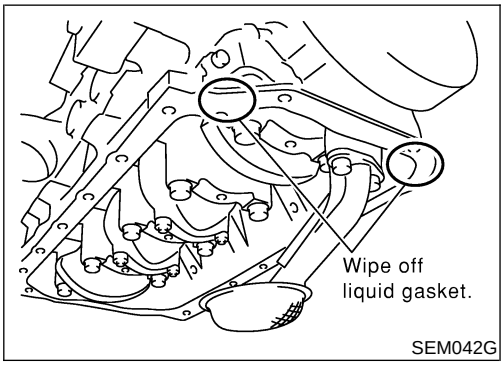

SEM042G

- Wipe off excessive RTV silicone sealant.

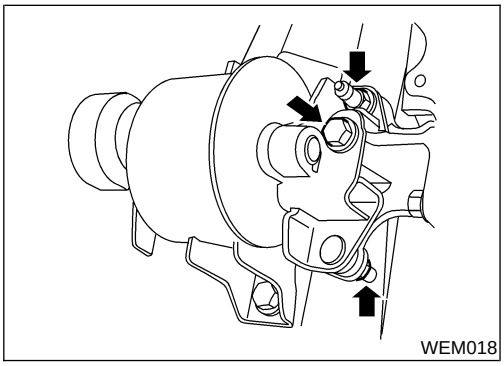
WEM018

7. Install RH engine mounting and bracket. Refer to "Removal and Installation", EM-127.

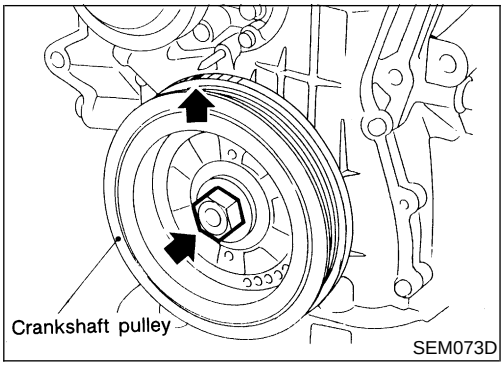

8. Install crankshaft pulley.
9. Set No. 1 piston at TDC of its compression stroke.

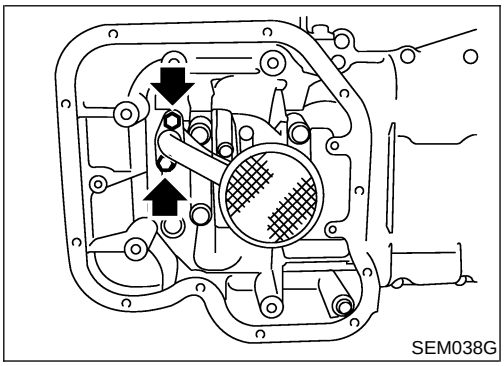

10. Install oil strainer.
11. Install oil pan.
    Refer to "Components", EM-89.

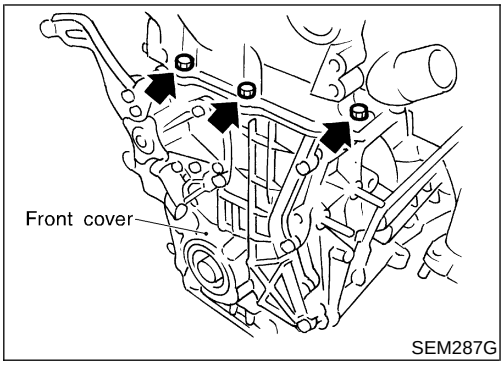

12. Install cylinder head outside bolts.

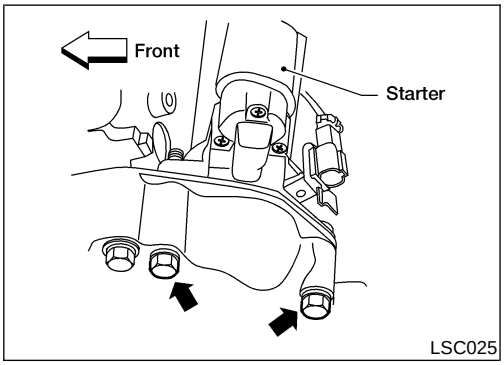

13. Install starter motor.

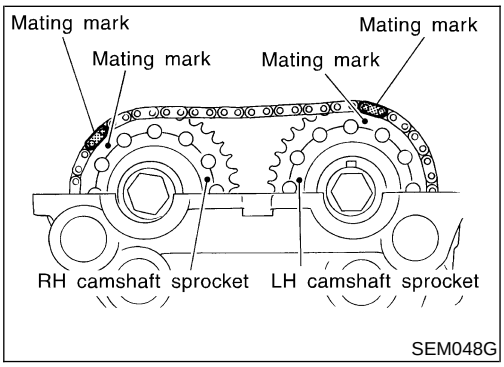

14. Install camshaft sprockets and timing chain on them.
    Line up mating marks on timing chain with mating marks on camshaft sprockets.
    Apply new engine oil to threads and seating surfaces of camshaft sprocket bolts before installing them.

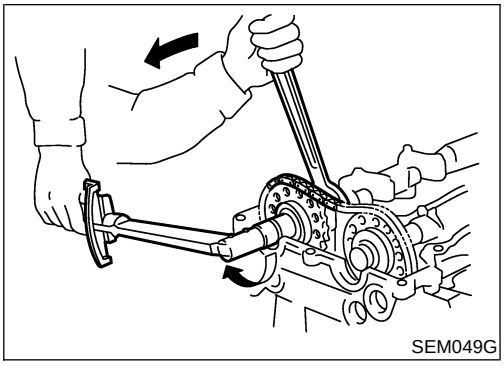
SEM049G

- Lock camshafts as shown in figure and tighten to specified torque.
  : 137 - 157 N·m (14.0 - 16.0 kg-m, 101 - 116 ft-lb)

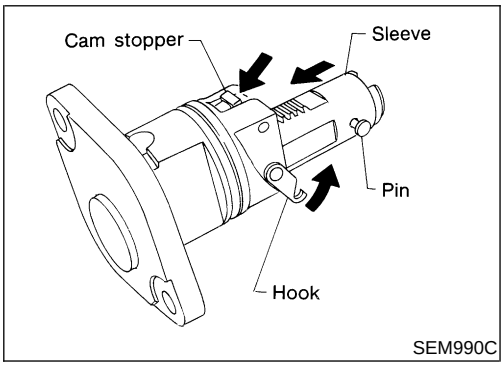

SEM990C

15. Install chain tensioner.

Make sure the camshaft sprockets are tightened completely. Press cam stopper down and "press-in" sleeve until hook can be engaged on pin. When tensioner is bolted in position the hook will release automatically. Make sure arrow "A" points toward engine front.

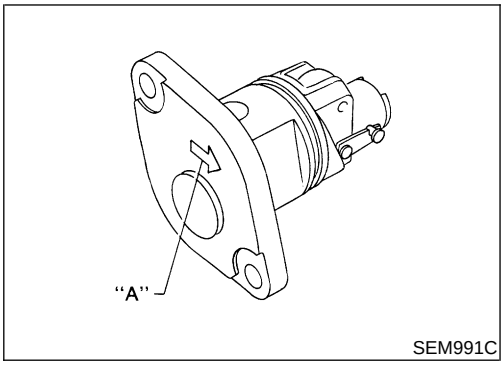

SEM991C

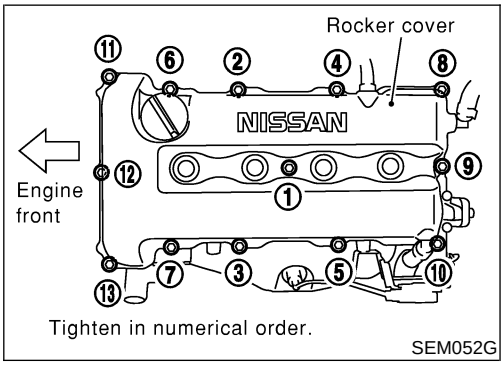

SEM052G

16. Install rocker cover with a new gasket and oil separator.
- **Be sure to install washers between bolts and rocker cover.**
- **Tightening procedure**
  STEP 1: Tighten bolts 1 - 10 - 11 - 13 - 8 in that order.
  STEP 2: Tighten bolts 1 - 13 in that order.
  : 8 - 10 N·m (0.8 - 1.0 kg-m, 69 - 87 in-lb)

17. Install the following parts:
- Spark plugs
- Water pump pulley and drive belts.
  For adjusting drive belt deflection, refer to ***MA-25***, "Checking Drive Belts".
- Front RH wheel
- Front/right-side splash undercovers

18. Connect the following:
- Power brake booster vacuum hose
- Spark plug wires

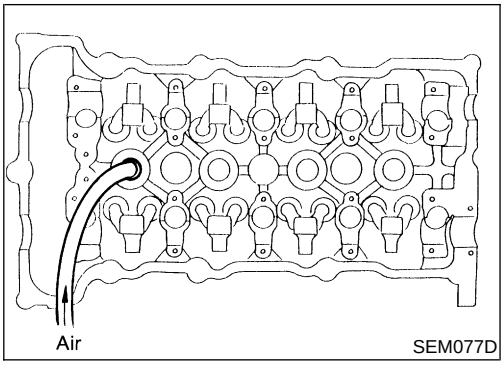

Replacement

NIEM0015

VALVE OIL SEAL

NIEM0015S01

1. Remove accelerator wire.
2. Remove rocker cover.
3. Remove camshafts and sprockets. Refer to “Components”, EM-105.
4. Remove spark plugs.
5. Install air hose adapter into spark plug hole and apply air pressure to hold valves in place. Apply a pressure of 490 kPa (5 kg/cm^2, 71 psi).
6. Remove rocker arm, rocker arm guide and shim.

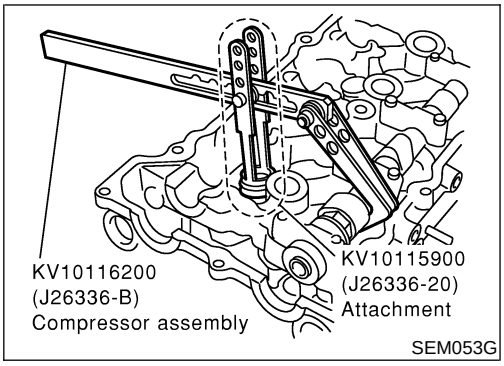

7. Remove valve spring with Tool. Temporarily install camshaft as shown.

Piston concerned should be set at TDC to prevent valve from falling into engine cylinder.

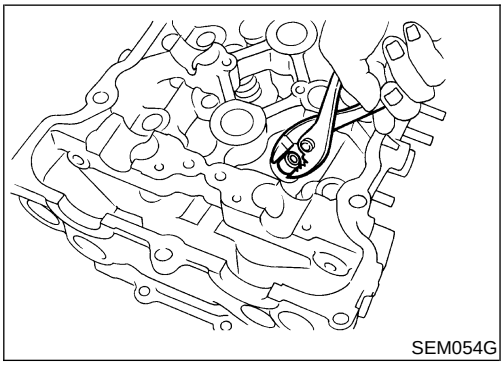

8. Remove valve oil seal with a suitable tool.

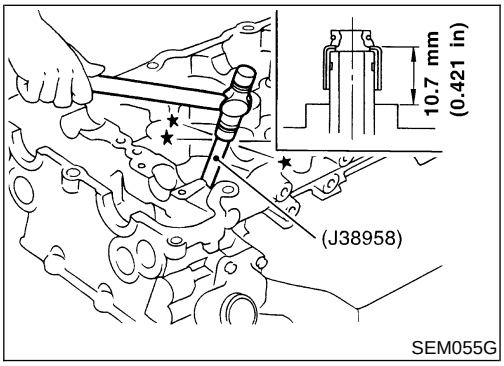

9. Apply new engine oil to new valve oil seal and install it with Tool.

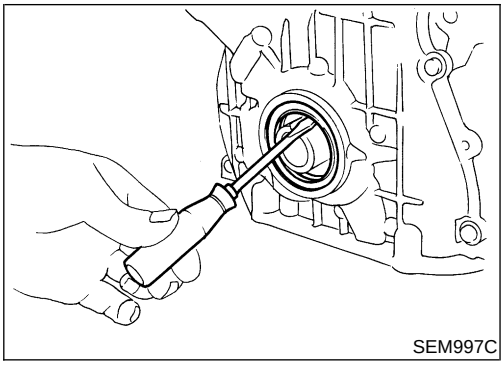
SEM997C

FRONT OIL SEAL

NIEM0015S02

1. Remove the following parts:
- Front/right-side splash undercover
- Front RH wheel and engine side cover
- Drive belts
- Crankshaft pulley
2. Remove front oil seal.

Be careful not to scratch front cover.

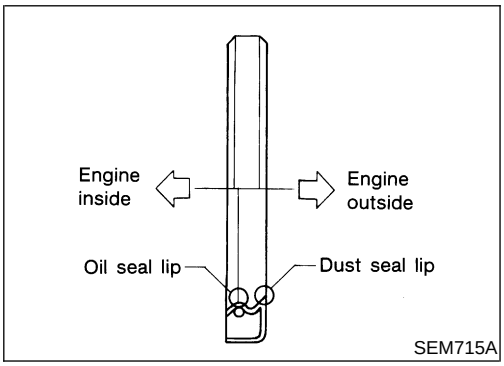

SEM715A

3. Apply new engine oil to new oil seal and install it using a suitable tool.
- **Install new oil seal in the direction shown.**

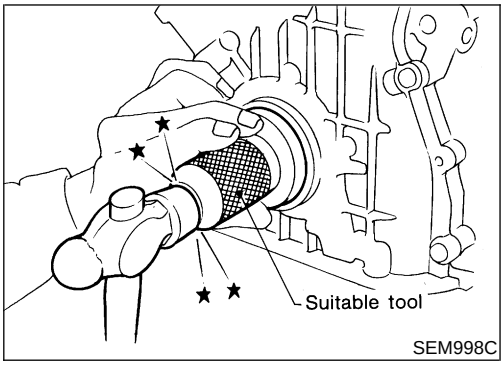

SEM998C

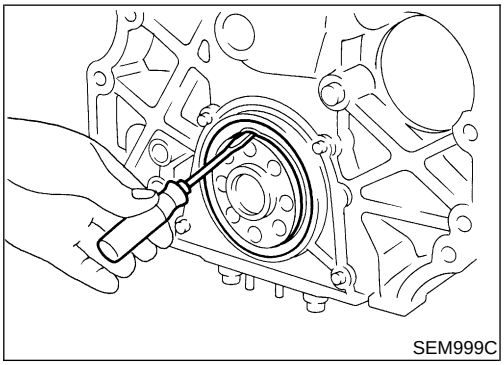
SEM999C

REAR OIL SEAL

NIEM0015S03

1. Remove transaxle. Refer to ***MT-12*** (M/T) or ***AT-274*** (A/T), "Removal".
2. Remove flywheel or drive plate.
3. Remove rear oil seal.
- **Be careful not to scratch rear oil seal retainer.**

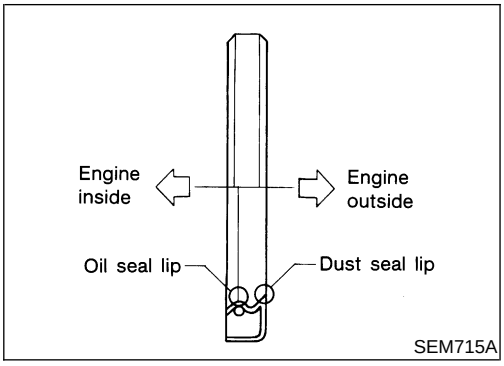

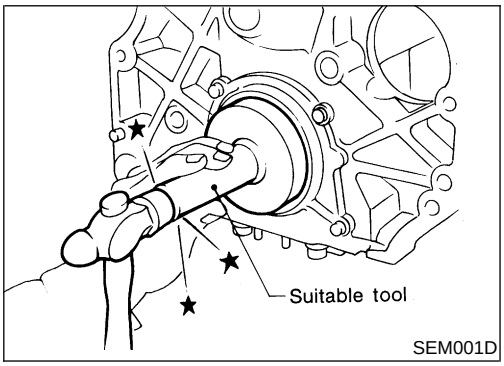

4. Apply new engine oil to new oil seal and install it using a suitable tool.

- **Install new oil seal in the direction shown.**

Components

NIEM0016

SEC. 111•130

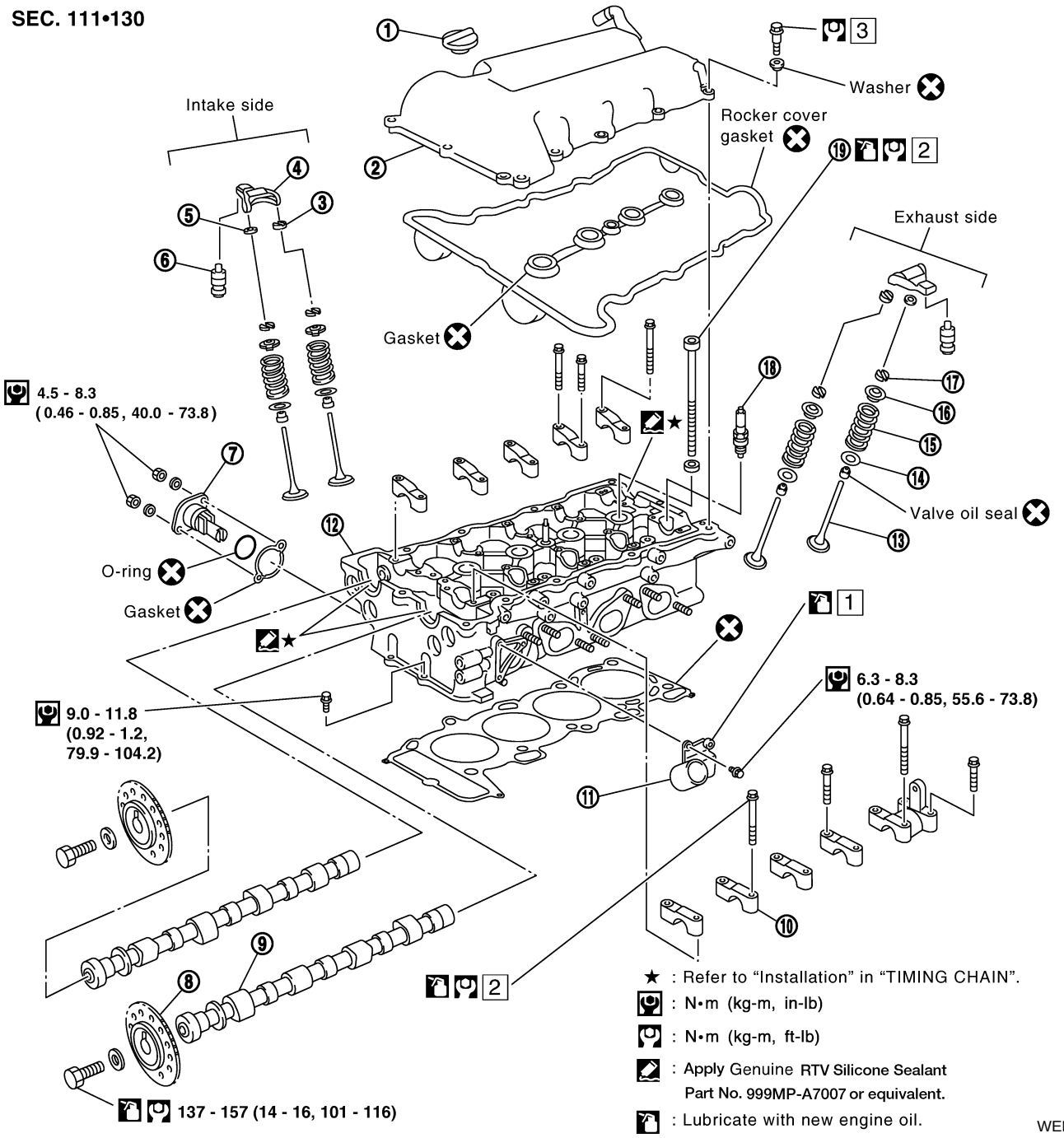

1. Oil filler cap
2. Rocker cover
3. Rocker arm guide
4. Rocker arm
5. Shim
6. Hydraulic lash adjuster
7. Chain tensioner
8. Camshaft sprocket
9. Camshaft
10. Camshaft bracket
11. Water outlet
12. Cylinder head
13. Valve
14. Valve spring seat
15. Valve spring
16. Valve spring retainer
17. Valve collet
18. Spark plug
19. Cylinder head bolt

1. Refer to ***LC-32***, "Water Outlet".
2. Refer to "Installation", EM-120.
3. Refer to "Installation", EM-98.

Removal

NIEM0017

1. Release fuel pressure.
   Refer to ***EC-1403*** (SR20DE), “Fuel Pressure Release”.
2. Remove front/right-side splash undercover.
3. Remove the front exhaust pipe. Refer to ***FE-15***, ”Exhaust System”.
4. Remove front RH wheel and engine side cover.
5. Drain coolant by removing cylinder block drain plug and radiator drain cock. Refer to ***MA-26***, “Changing Engine Coolant”.
6. Remove the generator. Refer to ***SC-34***, “Removal”.
7. Remove air duct to intake manifold.
8. Remove power steering pump.
9. Remove drive belts and water pump pulley.
10. Disconnect the following parts:

- Power brake booster vacuum hose
- Fuel hoses and pressure regulator
- Spark plug wires
- Engine harness, place aside
- Heated oxygen sensor 1 (front)
- Heated oxygen sensor 2 (rear)
- EVAP canister purge volume control solenoid valve connector
- PCV valve
- IACV-AAC valve
- TP sensor
- TP switch
- EGR volume control
- EGR temperature sensor
- Intake valve timing control position sensor
- Power steering hoses

11. Remove all spark plugs.

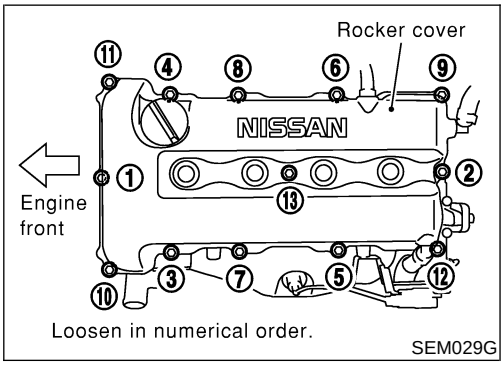

12. Remove rocker cover bolts in numerical order.
13. Remove rocker cover.

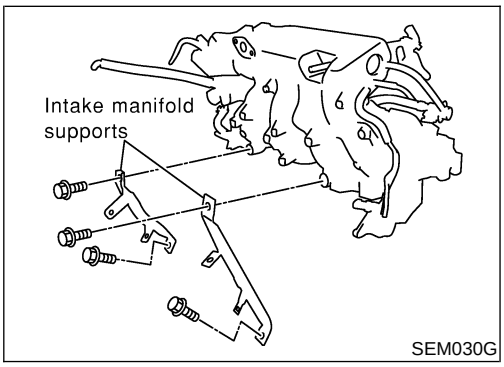

14. Remove intake manifold supports.

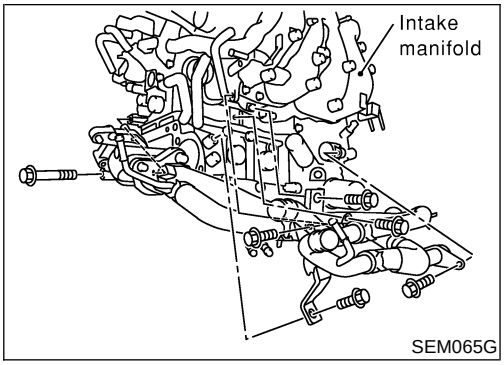

SEM065G

15. Remove water pipe assembly.

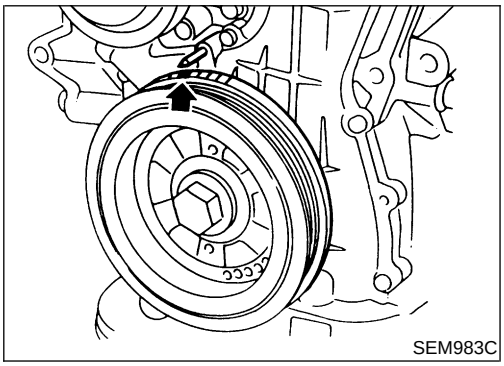
SEM983C

16. Set No. 1 piston at TDC of its compression stroke.

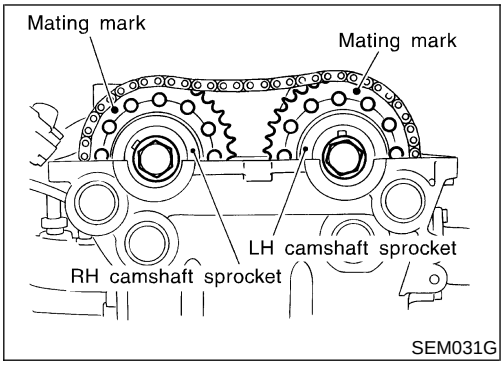

SEM031G

- **Rotate crankshaft until mating mark on camshaft sprocket is set at position indicated in figure.**

17. Remove chain tensioner.

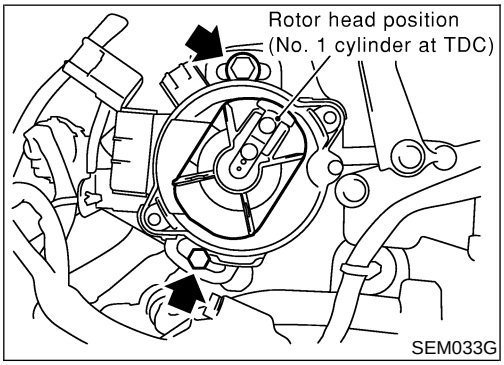

SEM033G

18. Remove distributor.

Do not turn rotor with distributor removed.

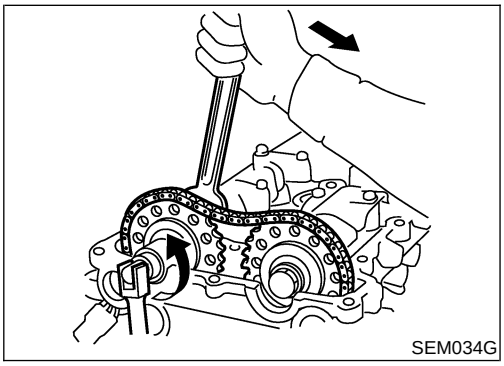
SEM034G

19. Remove camshaft sprockets.

- **For retiming in cylinder head removal, apply paint mark to timing chain matched with mating marks of camshaft sprockets.**

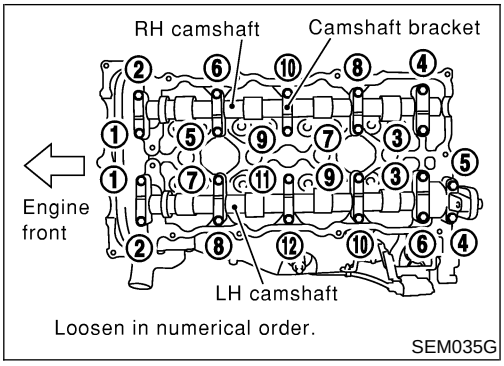

20. Remove camshaft brackets and camshafts.
- **Mark these parts' original positions for reassembly.**

21. Remove water hoses for heater core.
22. Remove front oxygen sensor.

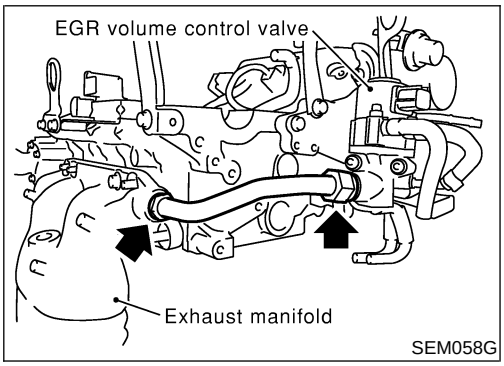

23. Remove exhaust manifold cover.
24. Remove EGR tube.

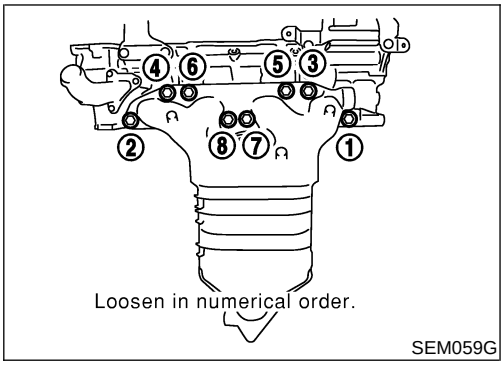

25. Remove exhaust manifold bolts as shown.
26. Remove exhaust manifold.

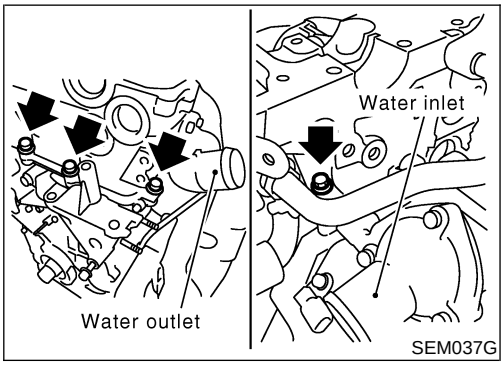

27. Remove cylinder head outside bolts.

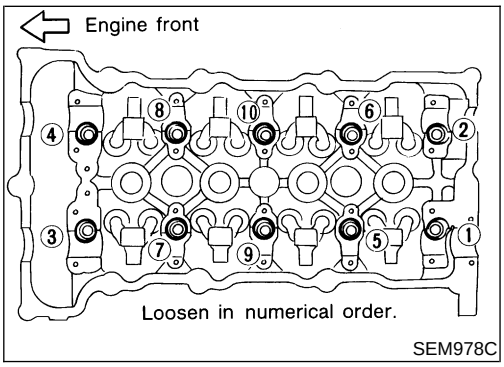

28. Remove cylinder head bolts in numerical order.
- **Removing bolts in incorrect order could result in a warped or cracked cylinder head.**
- **Loosen cylinder head bolts in two or three steps.**

29. Remove cylinder head completely with intake manifold.
- Remove the old gasket material.

30. Remove generator.
    Refer to ***SC-34***, "Removal".

Disassembly

NIEM0018

CAUTION:

- **When installing rocker arms, camshaft and oil seal, lubricate contacting surfaces with new engine oil.**
- **When tightening cylinder head bolts, camshaft sprocket bolts and camshaft bracket bolts, lubricate bolt threads and seat surfaces with new engine oil.**

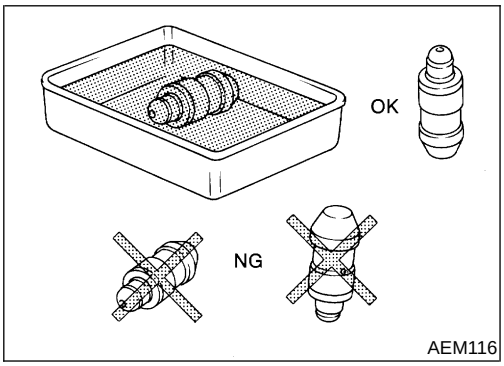

- **If a hydraulic lash adjuster is kept on its side, there is a risk of air entering it. When hydraulic lash adjusters are removed, stand them straight up or soak them in new engine oil.**
- **Do not disassemble hydraulic lash adjusters.**
- **Attach tags to lash adjusters so as not to mix them up.**

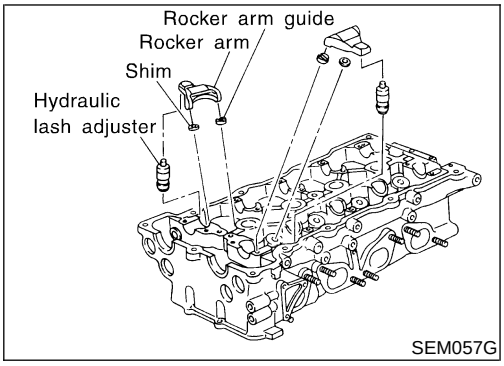

1. Remove rocker arms, shims, rocker arm guides and hydraulic lash adjusters from cylinder head.

CAUTION:

Keep parts in order so they can be installed in their original positions during assembly.

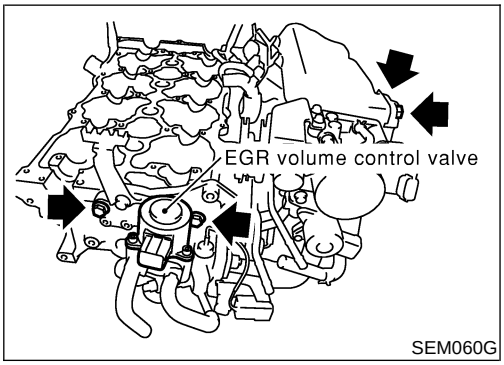

2. Remove EGR volume control valve assembly.

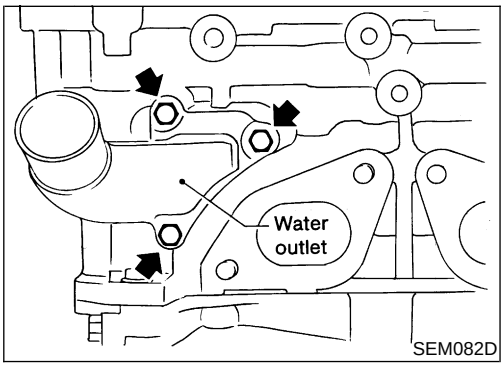

3. Remove water outlet.

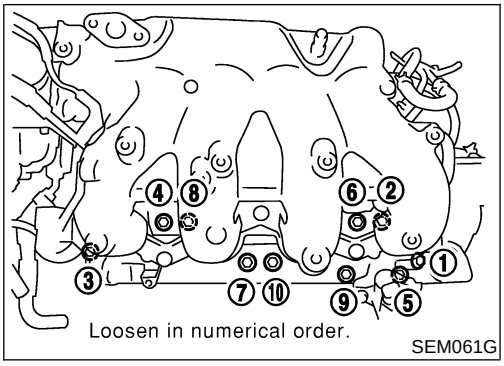

4. Remove intake manifold with intake manifold collector as shown.

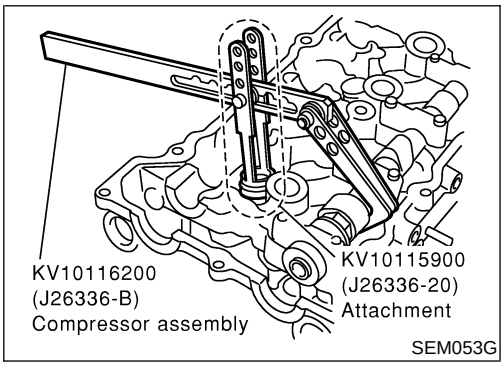

5. Remove valve components with Tool. Install camshaft temporarily.

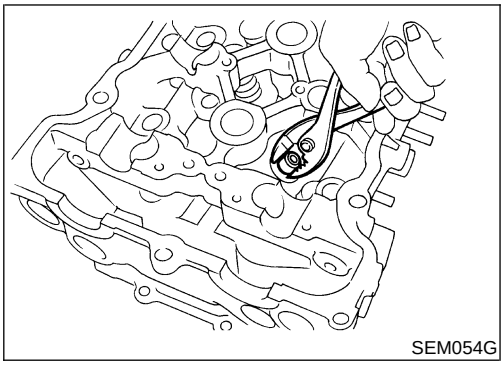

6. Remove valve oil seal with a suitable tool.

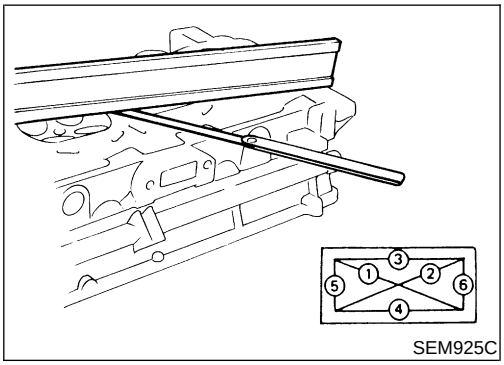

Inspection

NIEM0019

CYLINDER HEAD DISTORTION

NIEM0019S01

- Clean mating surface of cylinder head.
- Use a reliable straightedge and feeler gauge to check the flatness of cylinder head mating surface.
- Check along six positions shown in figure.

Head surface flatness:

Standard: Less than 0.03 mm (0.0012 in)

Limit: 0.1 mm (0.004 in)

If beyond the specified limit, replace or resurface it.

Resurfacing limit:

The limit for cylinder head resurfacing is determined by the amount of cylinder block resurfacing.

Amount of cylinder head resurfacing is "A".

Amount of cylinder block resurfacing is "B".

The maximum limit is as follows:

A + B = 0.2 mm (0.008 in)

After resurfacing cylinder head, check that camshaft rotates freely by hand. If resistance is felt, cylinder head must be replaced.

Nominal cylinder head height:

136.9 - 137.1 mm (5.390 - 5.398 in)

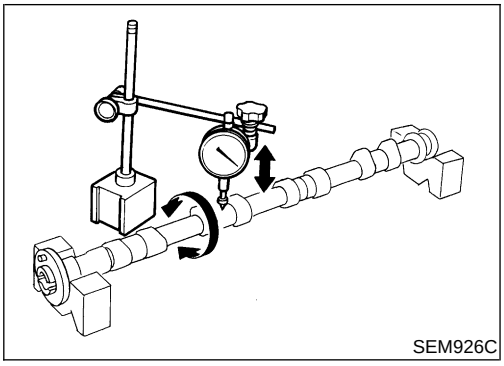
SEM926C

CAMSHAFT VISUAL CHECK

NIEM0019S02

Check camshaft for scratches, seizure and wear.

CAMSHAFT RUNOUT

NIEM0019S03

1. Measure camshaft runout at the center journal.
   Runout (Total indicator reading):
   Standard: Less than 0.02 mm (0.0008 in)
   Limit: 0.1 mm (0.004 in)
2. If it exceeds the limit, replace camshaft.

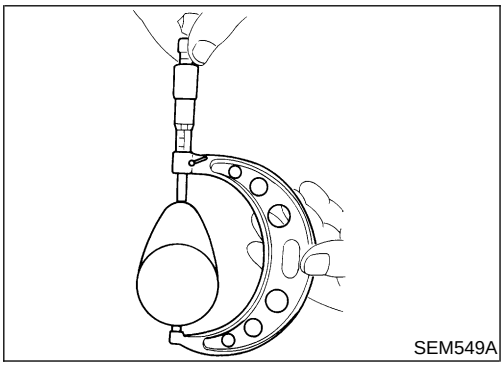
SEM549A

CAMSHAFT CAM HEIGHT

NIEM0019S04

1. Measure camshaft cam height.
   Standard cam height:
   Intake
   37.680 - 37.870 mm (1.4835 - 1.4909 in)
   Exhaust
   37.309 - 37.499 mm (1.4689 - 1.4763 in)
   Cam height wear limit:
   Intake & Exhaust: 0.2 mm (0.008 in)
2. If wear is beyond the limit, replace camshaft.

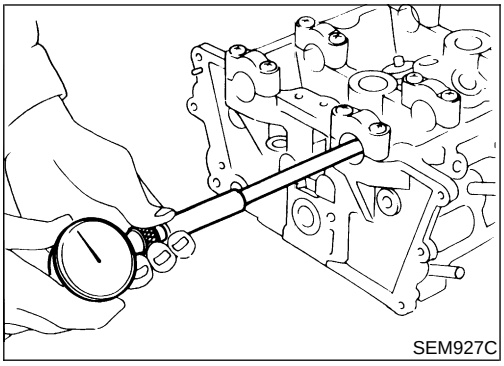
SEM927C

CAMSHAFT JOURNAL CLEARANCE

NIEM0019S05

1. Install camshaft bracket and tighten bolts. Refer to "Installation", EM-120.
2. Measure inner diameter of camshaft bearing.
   Standard inner diameter:
   28.000 - 28.021 mm (1.1024 - 1.1032 in)

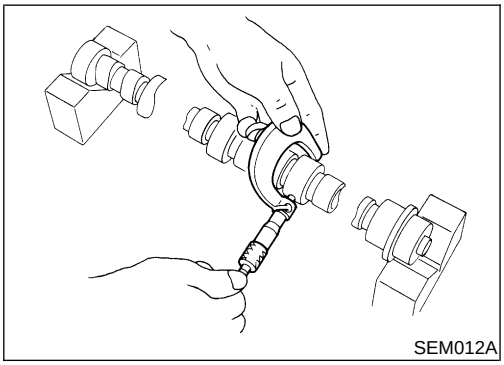
SEM012A

3. Measure outer diameter of camshaft journal.
   Standard outer diameter:
   27.935 - 27.955 mm (1.0998 - 1.1006 in)
4. Calculate camshaft journal clearance.
   Camshaft journal clearance = standard inner diameter − standard outer diameter:
   Standard
   0.030 - 0.071 mm (0.0012 - 0.0028 in)
   Limit
   0.15 mm (0.0059 in)
5. If clearance exceeds the limit, replace camshaft and remeasure camshaft journal clearance.

- If clearance still exceeds the limit after replacing camshaft, replace cylinder head.

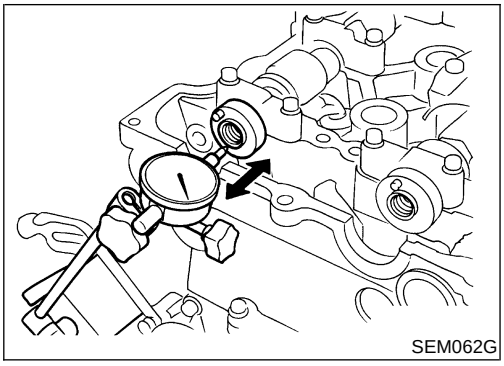
SEM062G

CAMSHAFT END PLAY

NIEM0019S06

1. Install camshaft in cylinder head. Refer to "Installation", EM-98.
2. Measure camshaft end play.

   Camshaft end play:

   Standard

   0.055 - 0.139 mm (0.0022 - 0.0055 in)

   Limit

   0.20 mm (0.0079 in)
3. If end play exceeds the limit, replace camshaft and remeasure camshaft end play.

- If end play still exceeds the limit after replacing camshaft, replace cylinder head.

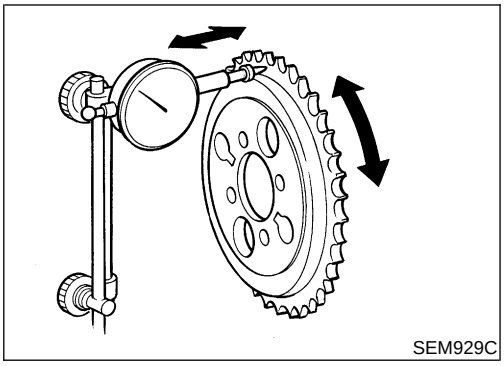
SEM929C

CAMSHAFT SPROCKET RUNOUT

NIEM0019S07

1. Install sprocket on camshaft.
2. Measure camshaft sprocket runout.

   Runout (Total indicator reading):

   Limit 0.25 mm (0.0098 in)
3. If it exceeds the limit, replace camshaft sprocket.

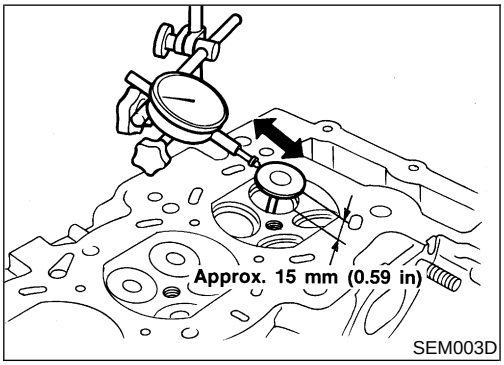

SEM003D

VALVE GUIDE CLEARANCE

NIEM0019S08

1. Measure valve deflection as shown in illustration. (Valve and valve guide mostly wear in this direction.)

   Valve deflection limit (Dial gauge reading):

   Intake & Exhaust

   0.2 mm (0.008 in)

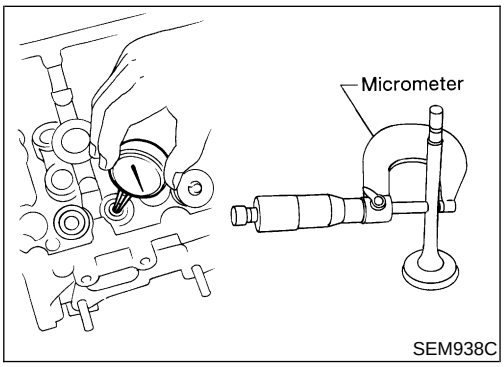

SEM938C

2. If it exceeds the limit, check valve to valve guide clearance.

a. Measure valve stem diameter and valve guide inner diameter.

b. Calculate valve to valve guide clearance.

   Valve stem to valve guide clearance = valve guide inner diameter − valve stem diameter:

   Standard

   Intake 0.020 - 0.053 mm (0.0008 - 0.0021 in)

   Exhaust 0.040 - 0.073 mm (0.0016 - 0.0029 in)

   Limit

   Intake 0.08 mm (0.0031 in)

Exhaust 0.1 mm (0.004 in)

c. If it exceeds the limit, replace valve and remeasure clearance.

- If clearance still exceeds the limit after replacing valve, replace valve guide.

VALVE GUIDE REPLACEMENT

NIEM0019S09

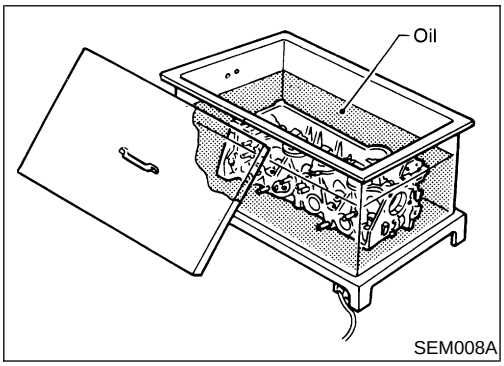

SEM008A

1. To remove valve guide, heat cylinder head to 110 to 130°C (230 to 266°F).

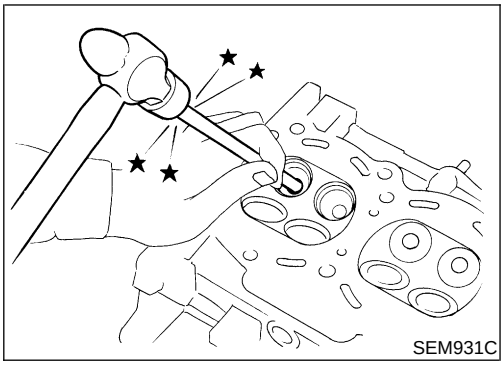
SEM931C

2. Drive out valve guide with a press (under a 20 kN [2 ton, 2.2 US ton, 2.0 Imp ton] pressure) or hammer and suitable tool.

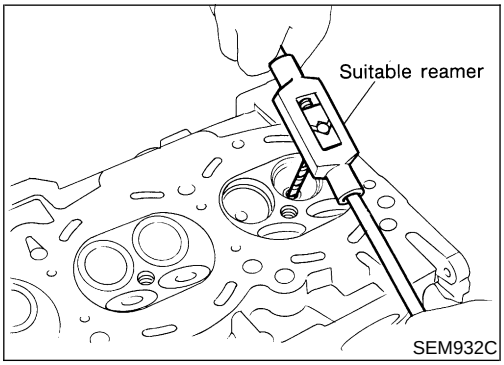

SEM932C

3. Ream cylinder head valve guide hole.

   Valve guide hole diameter
   (for service parts):
   Intake & Exhaust
   10.175 - 10.196 mm (0.4006 - 0.4014 in)

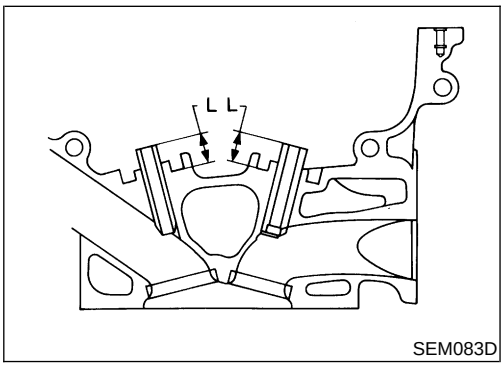

SEM083D

4. Heat cylinder head to 110 to 130°C (230 to 266°F) and press service valve guide into cylinder head.

   Projection "L":
   14.0 - 14.2 mm (0.551 - 0.559 in)

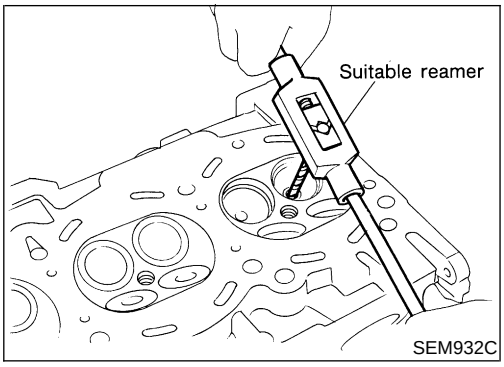

5. Ream valve guide.

Finished size:

Intake & Exhaust

6.000 - 6.018 mm (0.2362 - 0.2369 in)

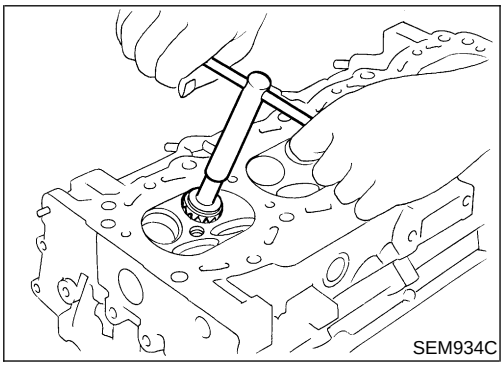

VALVE SEATS

NIEM0019S10

Check valve seats for pitting at contact surface. Resurface or replace if excessively worn.

- **Before repairing valve seats, check valve and valve guide for wear. If they are worn, replace them. Then correct valve seat.**
- **Use both hands to cut uniformly.**

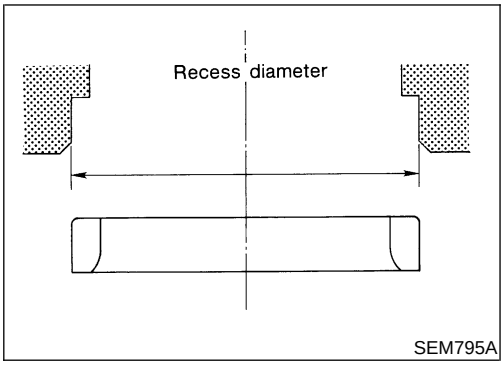

REPLACING VALVE SEAT FOR SERVICE PARTS

NIEM0019S11

1. Bore out old seat until it collapses. Set machine depth stop so that boring cannot contact bottom face of seat recess in cylinder head.
2. Ream cylinder head recess.

Reaming bore for service valve seat

Oversize [0.5 mm (0.020 in)]:

Intake 35.500 - 35.516 mm (1.3976 - 1.3983 in)

Exhaust 31.500 - 31.516 mm (1.2402 - 1.2408 in)

Use the valve guide center for reaming to ensure valve seat will have the correct fit.

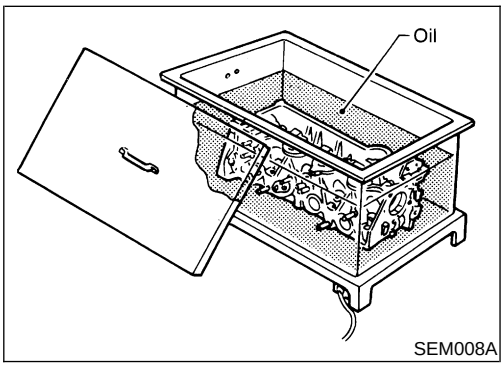

3. Heat cylinder head to 110 to 130°C (230 to 266°F).
4. Press fit valve seat until it seats on the bottom.

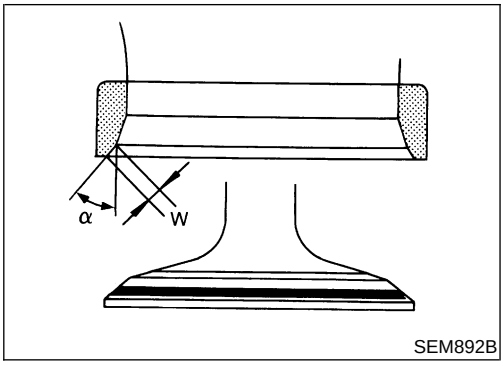

SEM892B

5. Cut or grind valve seat to the specified dimensions using a suitable tool. Refer to "VALVE SEAT", EM-147.
6. After cutting, lap valve seat with abrasive compound.
7. Check valve seating condition.

Seat face angle "α":
44°53′ - 45°07′
Contacting width "W":
Intake
1.05 - 1.35 mm (0.0413 - 0.0531 in)
Exhaust
1.25 - 1.55 mm (0.0492 - 0.0610 in)

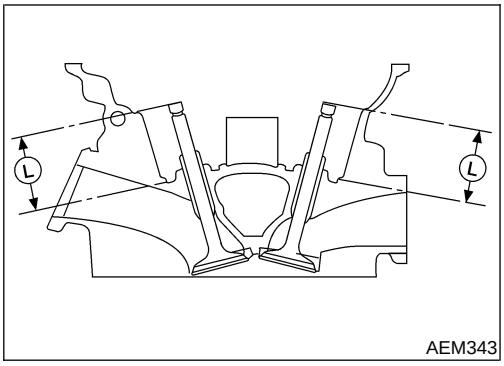

AEM343

Use a depth gauge to measure the distance between the mounting surface of the cylinder head spring seat and the valve stem end. If the distance is shorter than the specified valve, repeat step 5 above to adjust it.
If it is longer, replace the valve seat with a new one.

Valve seat resurface limit:
42.74 - 43.26 mm (1.6827 - 1.7031 in)

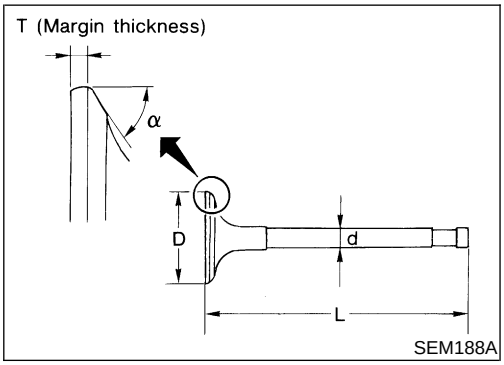

SEM188A

VALVE DIMENSIONS

NIEM0019S12

Check dimensions of each valve. Refer to "VALVE", EM-144.
When valve head has been worn down to 0.5 mm (0.020 in) in margin thickness, replace valve. Refer to "VALVE", EM-144.
Grinding allowance for valve stem tip is 0.2 mm (0.008 in) or less.

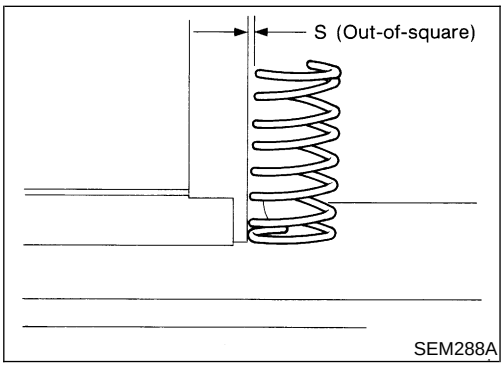

SEM288A

VALVE SPRING

NIEM0019S13

Squareness

NIEM0019S1301

1. Measure dimension "S".

Out-of-square "S":
Less than 2.1 mm (0.0827 in)

2. If it exceeds the limit, replace spring.

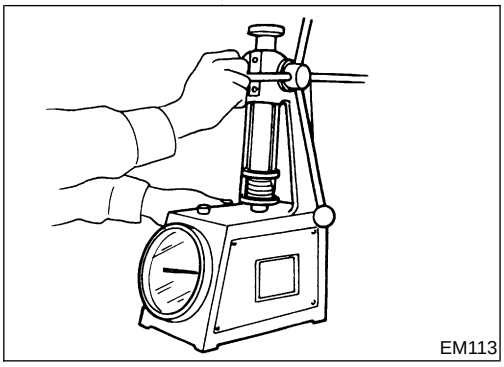
EM113

Pressure

NIEM0019S1302

Check valve spring pressure at specified spring height.

Pressure:

Standard

519 - 571 N (52.9 - 58.2 kg, 116.7 - 128.4 lb) at 27.0 mm (1.063 in)

Limit

More than 491.8 N (50.16 kg, 110.56 lb) at 27.0 mm (1.063 in)

If not within specification, replace spring.

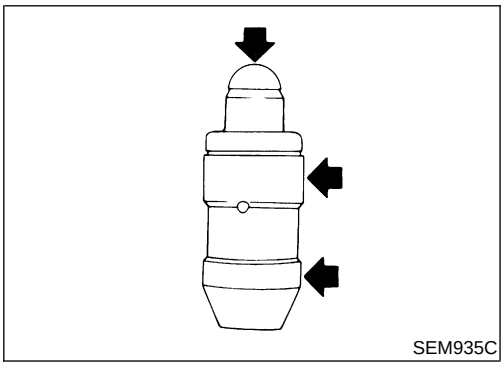
SEM935C

HYDRAULIC LASH ADJUSTER

NIEM0019S14

1. Check contact and sliding surfaces for wear or score.

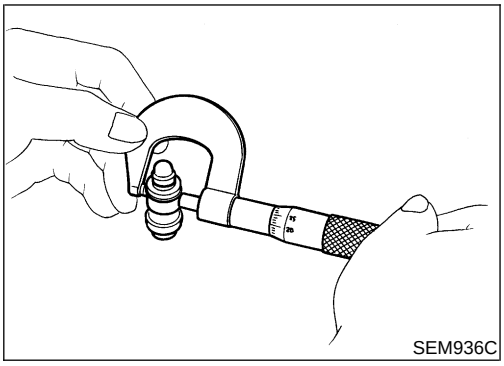
SEM936C

2. Check diameter of lash adjuster.

Outer diameter:

16.980 - 16.993 mm (0.6685 - 0.6690 in)

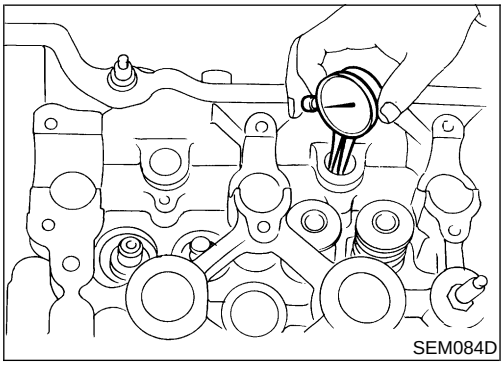
SEM084D

3. Check lash adjuster guide hole diameter.

Inner diameter:

17.000 - 17.020 mm (0.6693 - 0.6701 in)

Standard clearance between lash adjuster and adjuster guide hole:

0.007 - 0.040 mm (0.0003 - 0.0016 in)

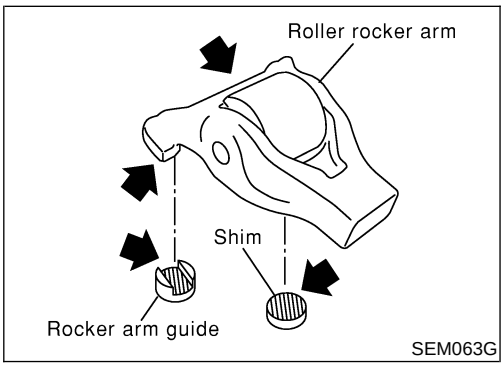

SEM063G

ROCKER ARM, SHIM AND ROCKER ARM GUIDE

NIEM0019S15

Check contact and sliding surfaces of rocker arms, shims and rocker arm guides for wear or score.

Assembly

NIEM0020

CAUTION:

- **When installing rocker arms, camshaft and oil seal, lubricate contacting surfaces with new engine oil.**
- **When tightening cylinder head bolts, camshaft sprocket bolts and camshaft bracket bolts, lubricate bolt threads and seat surfaces with new engine oil.**

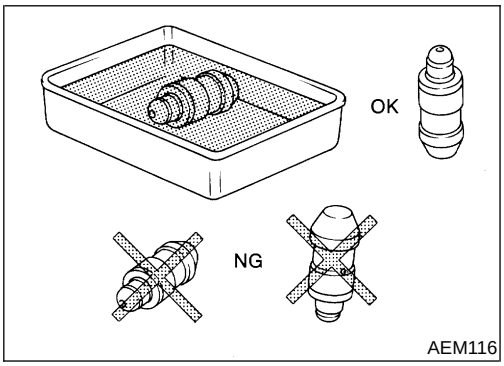

AEM116

- **If a hydraulic lash adjuster is kept on its side, there is a risk of air entering it. When hydraulic lash adjusters are removed, stand them straight up or soak them in new engine oil.**
- **Do not disassemble hydraulic lash adjusters.**
- **Attach tags to lash adjusters so as not to mix them up.**

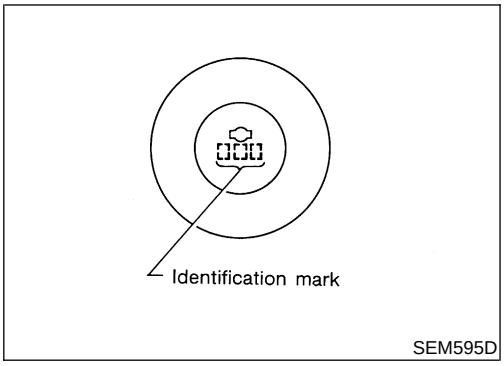

SEM595D

1. Install valve component parts.

- **Install valves, noting their identification marks as indicated in the table below.**

Valve	Identification mark
Intake valve	2J3
Exhaust valve	J21

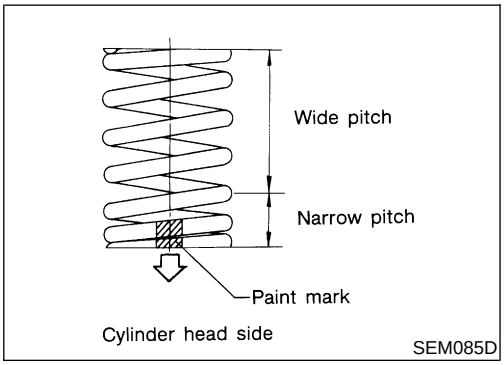

SEM085D

- **Always use new valve oil seal.**
  Refer to "VALVE OIL SEAL", EM-102.
- **Before installing valve oil seal, install valve spring seat.**
- **Install valve spring (uneven pitch type) with its narrow pitched side (paint mark) toward cylinder head side.**
- **After installing valve components, use plastic hammer to lightly tap valve stem tip to assure a proper fit.**

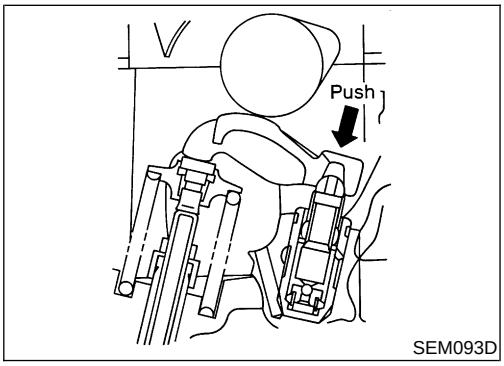

SEM093D

2. Check hydraulic lash adjusters.

a. Push on the rocker arm above the hydraulic lash adjuster. If it moves 1 mm (0.04 in) or more, there is air in the high pressure chamber of hydraulic lash adjuster.
Noise will be emitted from hydraulic lash adjuster if engine is started without bleeding air.

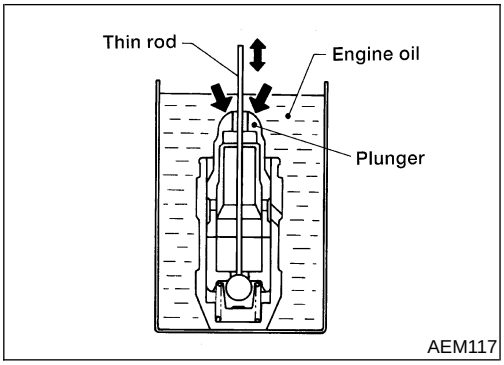

b. Remove hydraulic lash adjuster and dip in a container filled with new engine oil. While pushing plunger as shown in figure, lightly push check ball using a thin rod. Air is completely bled when plunger no longer moves.

Air cannot be bled from this type of lash adjuster by running engine.

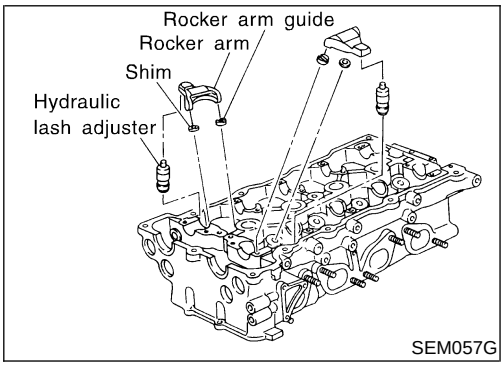

3. Remove camshafts, rocker arms and shims. For future reference, identify each shim with the cylinder it was removed from. Since the shims are reusable, it may not be necessary to replace all of the existing shims.

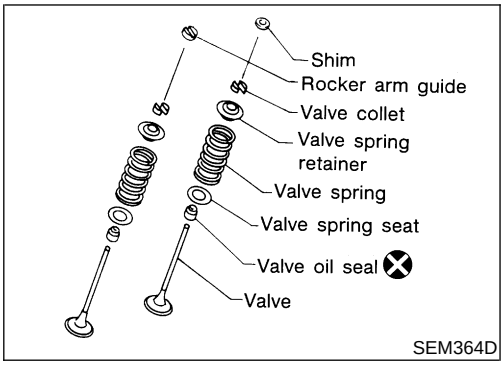

4. Before attempting any measurement, make sure the valve, valve spring, collet, retainer and rocker arm guide are properly installed in the head.

- **Always replace rocker arm guide with a new one.**

CAUTION:
Install parts in their original positions.

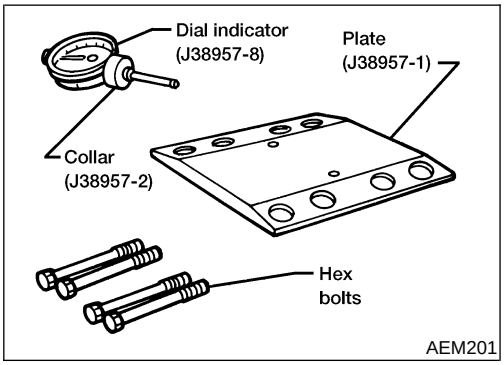

5. Install the J38957-1 gauge plate into the tapped holes at the cam journals and secure it to the head using two of the hex bolts supplied with the kit. (The two remaining bolts are spares.)

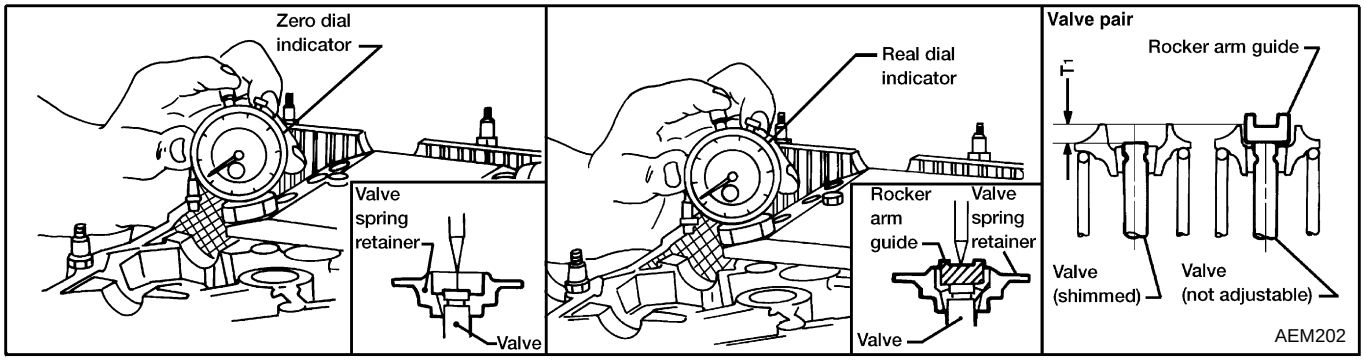

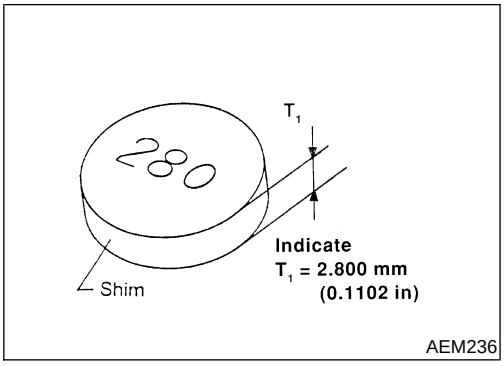

6. Place the J38957-2 collar on the J38957-8 dial indicator. Make sure the dished side of the collar is facing "up" (toward the dial indicator). Secure the collar to the dial indicator by tightening the set screw in the collar.
7. Place the indicator and collar over #1 cylinder intake valve shim side. Slide the tip of the dial indicator through the access hole and place it on the end of the valve stem. While resting the dial indicator collar on the gauge plate, "zero" the dial indicator.
8. Move the dial indicator and collar to the adjacent hole in the gauge plate and place the tip of the indicator in the center of the rocker arm guide. Write down the dial indicator reading. This measured distance between the valve stem end and the contact surface of the rocker arm guide is the "T_1" dimension.
9. Match the measured "T_1" dimension (in inches) to the available shim chart (in millimeters). Refer to "AVAILABLE SHIM", EM-146. (The "T_1" dimension is equivalent to the thickness and size designation of the valve shim.) Select the closest size shim to the measured "T_1" dimension. For example, if the measured "T_1" dimension is 0.1152 in. use a 2.925 mm shim. Shims are available in 17 different thicknesses ranging from 2.800 mm (0.1102 in.) to 3.200 mm (0.1260 in.) and increase in increments of 0.025 mm (0.0010 in.).
10. Repeat this procedure on the remaining cylinders.
11. Install rocker arms.

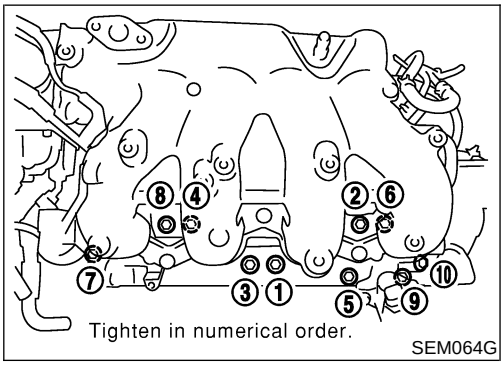

12. Install intake manifold with intake manifold collector as shown.

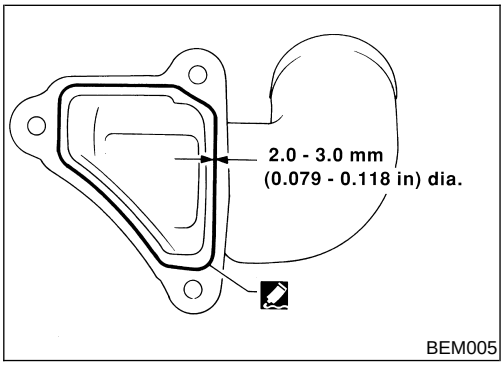

13. Install water outlet.

a. Remove old RTV silicone sealant from mating surface of water outlet.

- **Also remove old RTV silicone sealant from mating surface of cylinder head.**

b. Apply a continuous bead of RTV silicone sealant to mating surface of water outlet.

- **Use Genuine RTV silicone sealant Part No. 999MP-A7007 or equivalent.**

Installation

NIEM0021

1. Install generator.
   Refer to ***SC-34***, “INSTALLATION”.

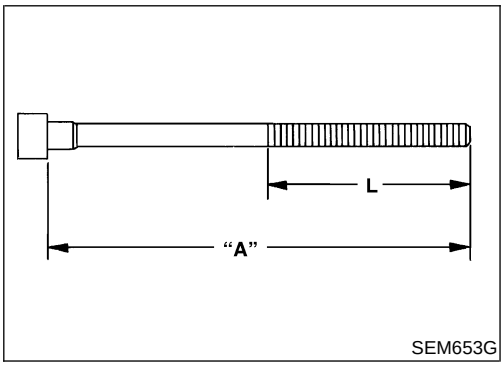

SEM653G

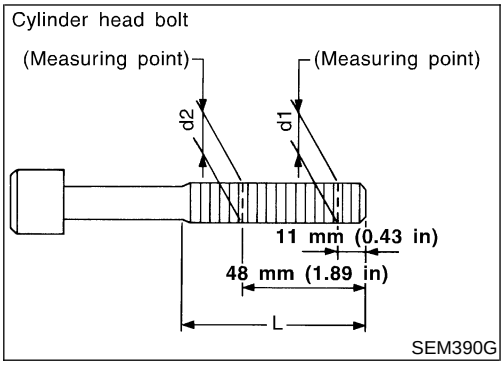

SEM390G

2. Install cylinder head completely with intake and exhaust manifolds and exhaust manifold heat shield.
- **Apply engine oil to threads and seating surfaces of cylinder head bolts before installing them.**
- **Be sure to install washers between bolts and cylinder head.**

CAUTION:
Old style bolt:
- **Old style bolt identification:**
  L: 75 mm (2.95 in)

If cylinder head bolt exceeds limit of dimension “A”, replace it.
Dimension “A”:
158.2 mm (6.228 in)

CAUTION:
New style bolt:
- **New style bolt identification:**
  L: 55 mm (2.17 in)

Cylinder head bolts are tightened by plastic zone tightening method. Whenever the size difference between d1 and d2 exceeds the limit, replace them with new ones.
Limit (d1 - d2):
0.15 mm (0.0059 in)
- **If reduction of outer diameter appears in a position other than d2, use it as d2 point.**

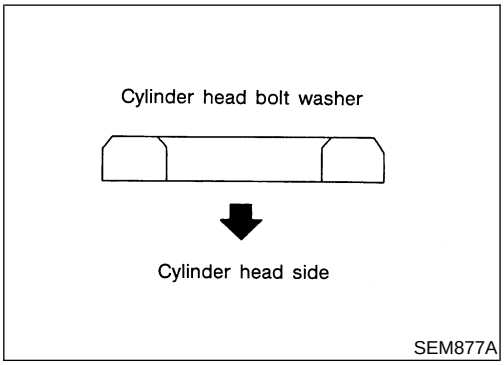

SEM877A

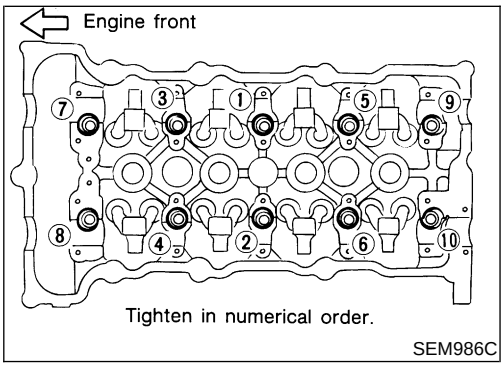

SEM986C

3. Tighten cylinder head bolts using the following procedure.
a. **Tighten all bolts to 39.2 N·m (4.0 kg-m, 29 ft-lb).**
b. **Tighten all bolts to 78.5 N·m (8.0 kg-m, 58 ft-lb).**
c. **Loosen all bolts completely.**
d. **Tighten all bolts to 34.5 – 44 N·m (3.6 – 4.4 kg-m, 26 – 32 ft-lb).**

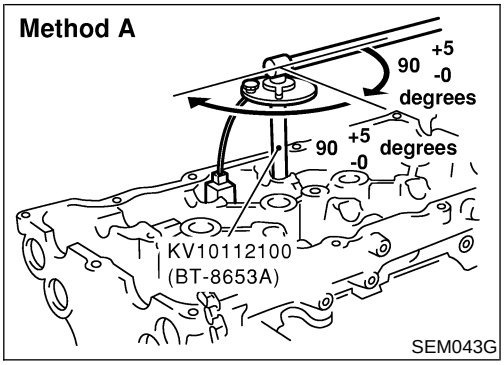

e. **Method A:**
Turn all bolts 90 to 95 degrees clockwise with Tool or suitable angle wrench.
Method B:
If an angle wrench is not available, mark all cylinder head bolts on the side facing engine front. Then, turn each cylinder head bolt 90 to 95 degrees clockwise.

f. **Turn all bolts another 90 to 95 degrees clockwise.**

g. **Ensure that paint mark on each bolt faces the rear of the engine. (Method B only)**

Do not turn any bolt 180 to 190 degrees clockwise all at once.

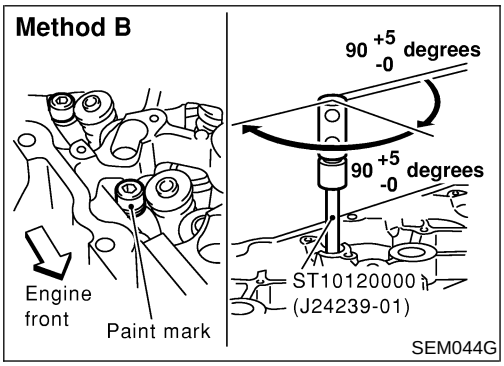

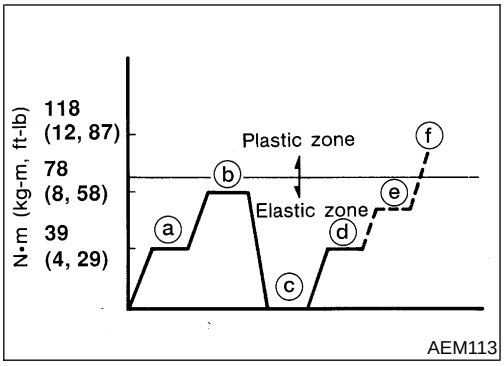

	Tightening torque N·m (kg-m, ft-lb)
a	39.2 (4.0, 29)
b	78.5 (8.0, 58)
c	0 (0, 0)
d	34.5 - 44 (3.6 - 4.4, 26 - 32)
e	90 - 95 degrees (90 degrees preferred)
f	90 - 95 degrees (90 degrees preferred)

4. Install cylinder head outside bolts.

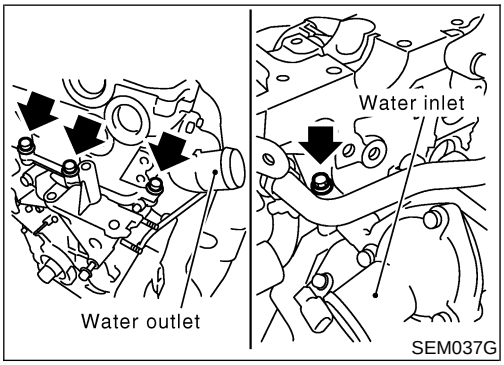

5. Install exhaust manifold.

- Tighten exhaust manifold bolts in numerical order.

Exhaust manifold:
: 37.8 - 48.1 N·m (3.9 - 4.9 kg-m, 28 - 35 ft-lb)

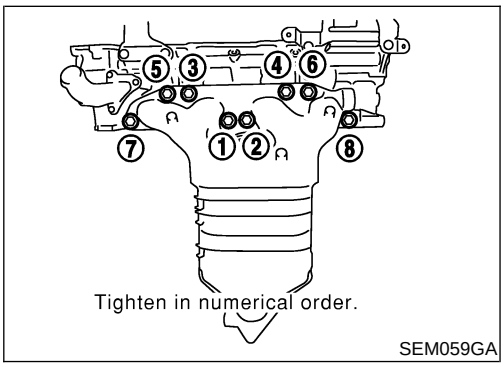

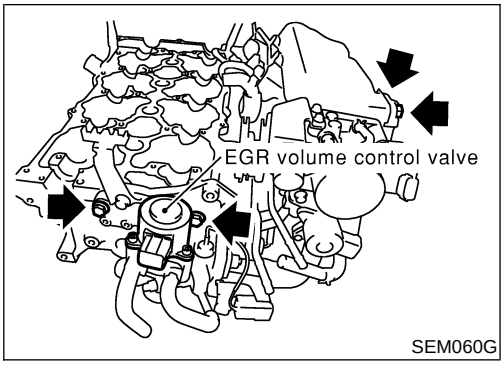

6. Install EGR volume control valve assembly.

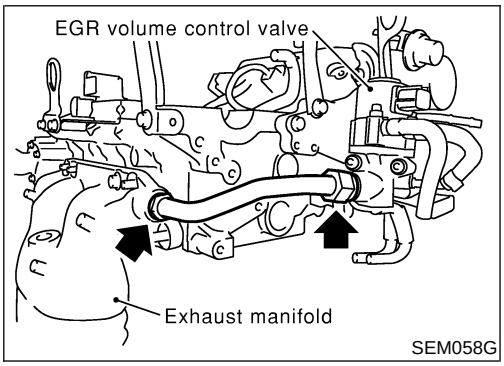

7. Install EGR tube.
8. Install exhaust manifold cover.
9. Install the following water hoses:
- Water hoses for heater.

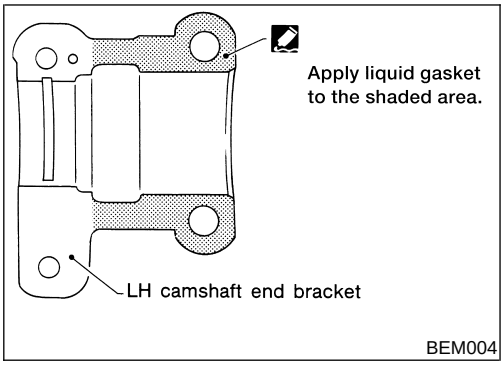

10. Remove old RTV silicone sealant from mating surface of LH camshaft end bracket.
- **Also remove old RTV silicone sealant from mating surface of cylinder head.**
11. Apply RTV silicone sealant to mating surface of LH camshaft end bracket as shown in illustration.
- **Use Genuine RTV silicone sealant Part No. 999MP-A7007 or equivalent.**

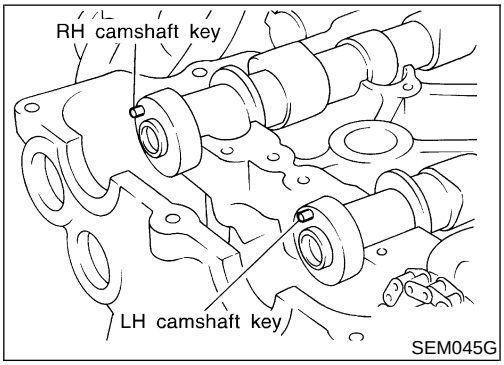

12. Install camshafts, camshaft brackets.
- Position camshaft.
- LH camshaft key at about 12 o'clock.
- RH camshaft key at about 12 o'clock.
  Apply new engine oil to bearing and cam surfaces of camshafts before installing them.

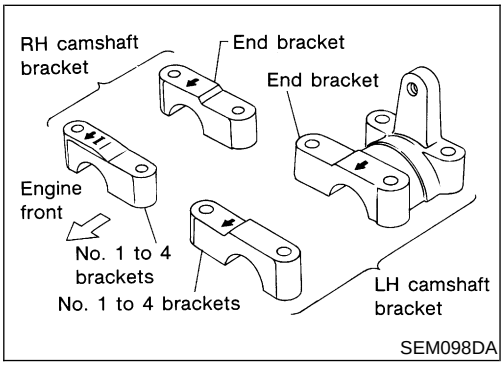

- Position camshaft brackets as shown in the illustration.
  Apply new engine oil to threads and seating surfaces of camshaft bracket bolts before installing them.

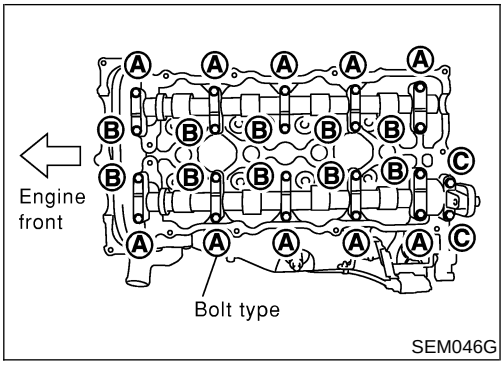

- **Arrange bolts (Size and length).**
  A: M6 x 53.8 mm (2.12 in)
  B: M6 x 37 mm (1.46 in)
  C: M8 x 35 mm (1.38 in)

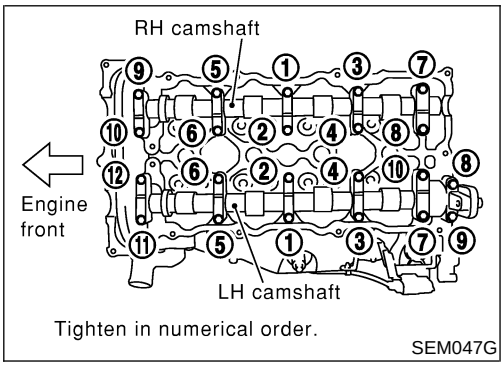

- **Tightening procedure**

  STEP 1:

  RH camshaft

  Tighten bolts 9 - 10 in that order then tighten bolts 1 - 8 in numerical order.

  : 2 N·m (0.2 kg-m, 17 in-lb)

  LH camshaft

  Tighten bolts 11 - 12 in that order then tighten bolts 1 - 10 in numerical order.

  : 2 N·m (0.2 kg-m, 17 in-lb)

  STEP 2:

  Tighten bolts in numerical order.

  : 6 N·m (0.6 kg-m, 52 in-lb)

  STEP 3:

  Tighten bolts in numerical order.

  Bolt type A B D

  : 9.8 - 11.8 N·m (1.0 - 1.2 kg-m, 7.2 - 8.7 ft-lb)

  Bolt type C

  : 18 - 25 N·m (1.8 - 2.6 kg-m, 13 - 19 ft-lb)

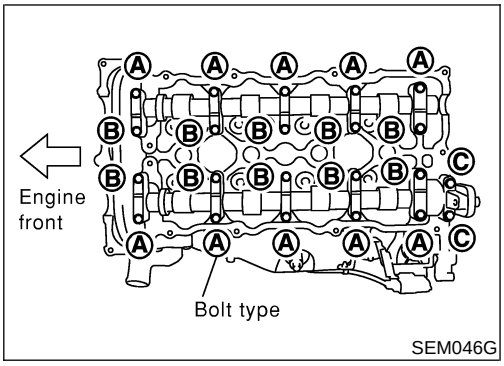

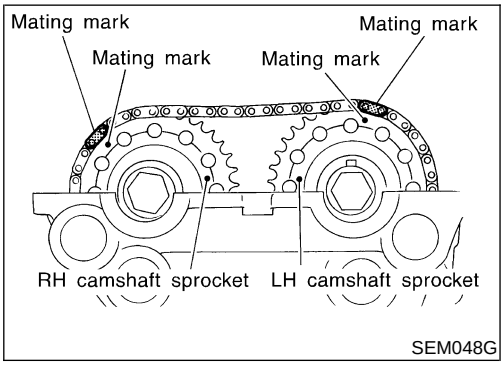

13. Install camshaft sprockets and timing chain on them.
    Line up mating marks on timing chain with mating marks on camshaft sprockets.

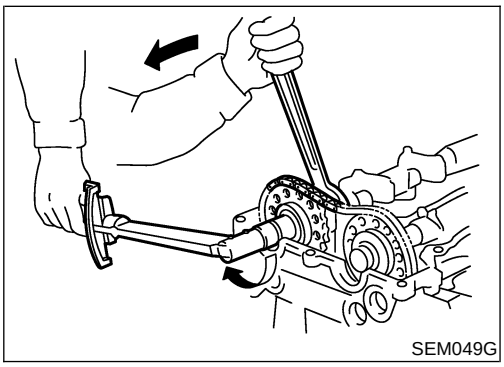

- Lock camshafts as shown in figure and tighten to specified torque.

  : 137 - 157 N·m (14.0 - 16.0 kg-m, 101 - 116 ft-lb)

Apply new engine oil to threads and seating surfaces of camshaft sprocket bolts before installing them.

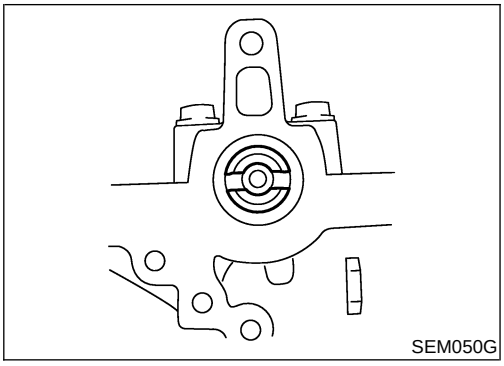
SEM050G

14. Install distributor.

- **Make sure that position of camshaft is as shown in figure.**

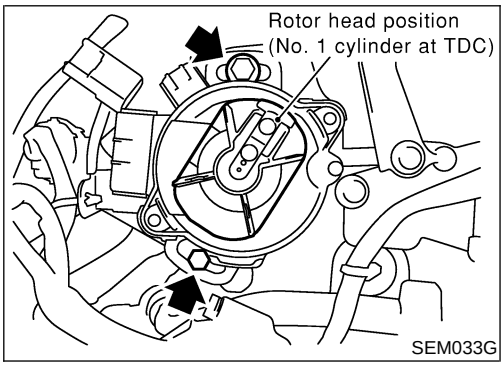

SEM033G

- **Make sure that No. 1 piston is set at TDC and that distributor rotor is set at No. 1 cylinder spark position.**

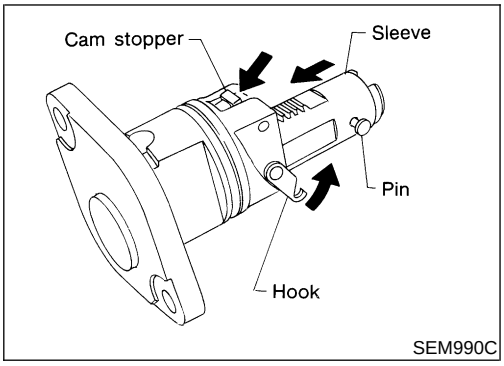

SEM990C

15. Install chain tensioner.

Make sure the camshaft sprockets are tightened completely. Press cam stopper down and "press-in" sleeve until hook can be engaged on pin. When tensioner is bolted in position the hook will release automatically. Make sure arrow "A" points toward engine front.

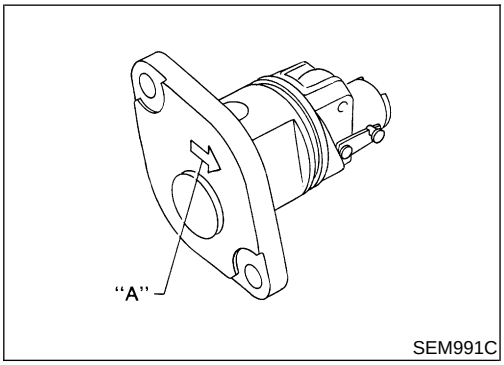

SEM991C

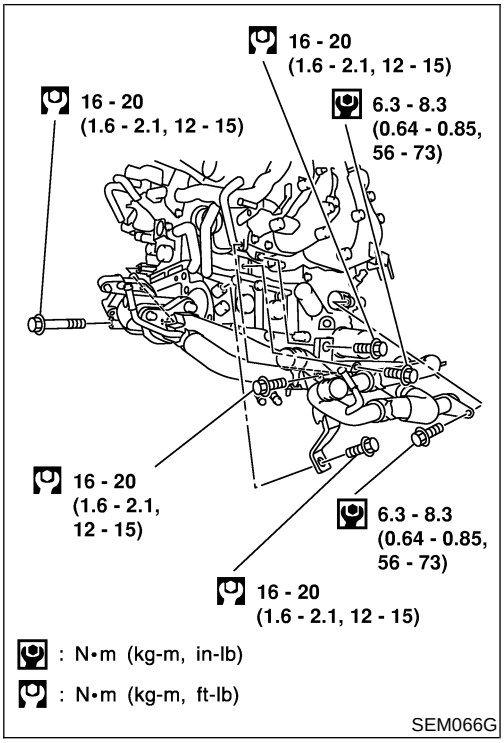

16. Install thermostat housing with water pipe.

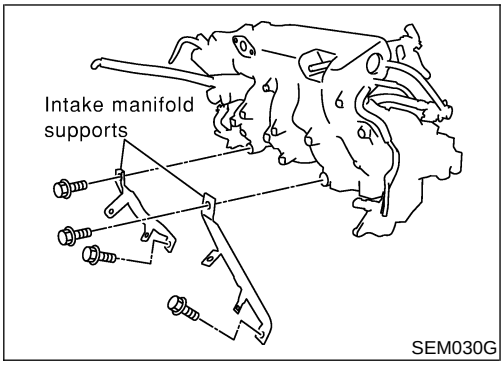

17. Install intake manifold supports.

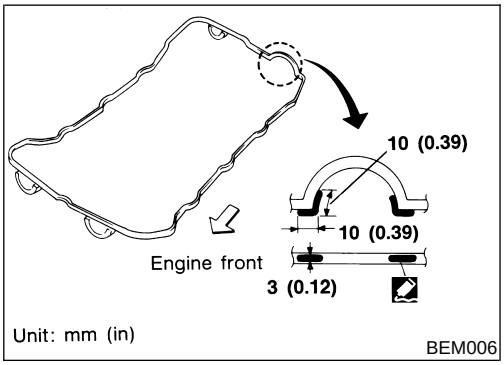

18. Remove old RTV silicone sealant from mating surfaces of rocker cover and cylinder head.
19. Apply a continuous bead of RTV silicone sealant to rocker cover gasket and cylinder head as shown in the illustrations.

- **Use Genuine RTV silicone sealant Part No. 999MP-A7007 or equivalent.**

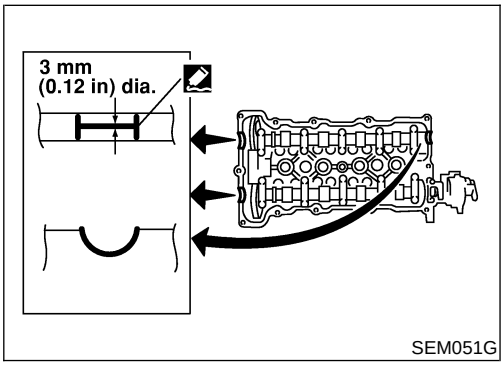

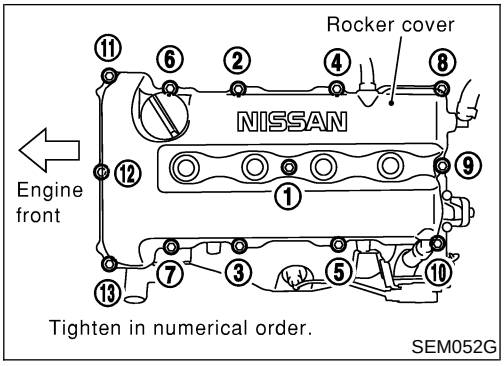

20. Install rocker cover and oil separator.
- **Be sure to install washers between bolts and rocker cover.**
- **Tightening procedure**

  STEP 1: Tighten bolts 1 - 12 - 11 - 13 - 8 in that order.

  STEP 2: Tighten bolts 1 - 13 in that order.

  : 8 - 10 N·m (0.8 - 1.0 kg-m, 69 - 87 in-lb)

21. Install the following parts:
- Spark plugs and wires
- Power steering pump and hoses
- Water pump pulley and drive belts.
  For adjusting drive belt deflection, refer to ***MA-25***, "Checking Drive Belts".
- Refit hoses and refill with coolant.
  Refer to ***MA-26***, "Changing Engine Coolant".
- Front RH wheel
- Front/right-side splash undercover
- Fuel pump fuse

22. Connect the following:
- Power brake booster vacuum hose
- Fuel hoses and pressure regulator
- Air duct to intake manifold
- Heated oxygen sensor 1 (front)
- Heated oxygen sensor 2 (rear)
- EVAP canister purge volume control solenoid valve connector
- PCV valve
- IACV-AAC valve
- TP sensor
- TP switch
- EGR volume control
- EGR temperature sensor
- Intake valve timing control position sensor

23. Erase DTC if any DTC appears. Refer to ***EC-1433***, "HOW TO ERASE EMISSION-RELATED DIAGNOSTIC INFORMATION".

Removal and Installation

NIEM0022

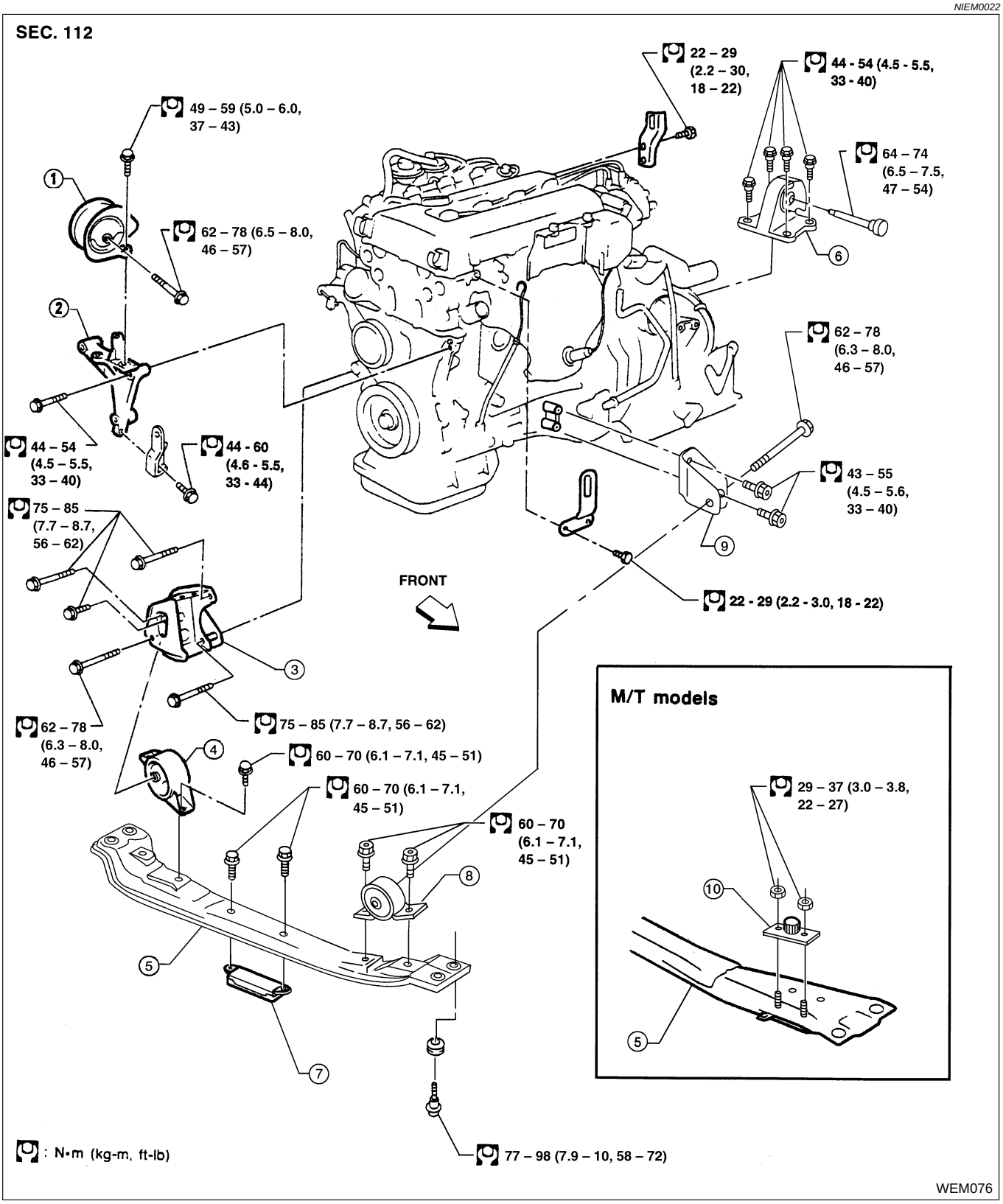

1. RH engine mounting
2. RH engine mounting bracket
3. Rear engine mounting bracket
4. Rear engine mounting
5. Center member
6. LH engine mounting
7. Dynamic damper (A/T model)
8. Front engine mounting
9. Front engine mounting bracket
10. Damper (M/T model)

WARNING:

- **Position vehicle on a flat and solid surface.**
- **Place chocks at front and back of rear wheels.**
- **Do not remove engine until exhaust system has completely cooled off, otherwise you may burn yourself and/or fire may break out in fuel line.**
- **Before disconnecting fuel hose, release pressure. Refer to *EC-1403*, "Fuel Pressure Release".**
- **Before removing front axle from transaxle, place safety stands under designated front supporting points. Refer to *GI-49*, "Garage Jack and Safety Stand".**
- **Be sure to lift engine and transaxle in a safe manner.**
- **For engines not equipped with engine slingers, attach proper slingers and bolts described in PARTS CATALOG.**

CAUTION:

- **When lifting engine, be sure to clear surrounding parts. Use special care near accelerator wire casing, brake lines and brake master cylinder.**
- **In lifting the engine, always use engine slingers in a safe manner.**
- **In removing drive shaft, be careful not to damage grease seal of transaxle.**
- **Before separating engine and transaxle, remove the crankshaft position sensor (POS) from the assembly.**
- **Always be extra careful not to damage edge of crankshaft position sensor (POS) or ring gear teeth.**

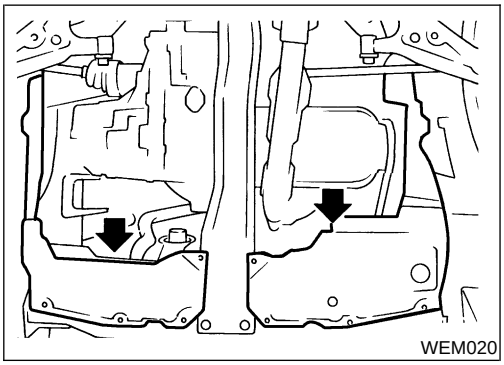

REMOVAL

NIEM0022S01

1. Remove the front splash undercovers.
2. Drain coolant from both cylinder block and radiator. Refer to ***MA-26***, "Changing Engine Coolant".
3. Drain engine oil.
4. Remove air cleaner assembly and duct.
5. Remove the battery and battery tray.
6. Disconnect the following:
   - Vacuum hoses
   - Heater hoses
   - A/T cooler hoses
   - Power steering hoses
   - Fuel lines
   - Wires
   - Harnesses and connectors
   - Throttle cable
   - ASCD cable
   - A/T control cable
7. Remove the cooling fans, radiator and recovery tank.
8. Remove front LH and RH wheels and drive shafts. Refer to ***AX-12***, "REMOVAL".

9. Remove front exhaust pipe.
10. Remove starter and intake manifold supports.
11. Remove the drive belts.
12. Remove power steering oil pump and A/C compressor.
13. Set a suitable transmission jack under transaxle. Lift engine with engine slinger.

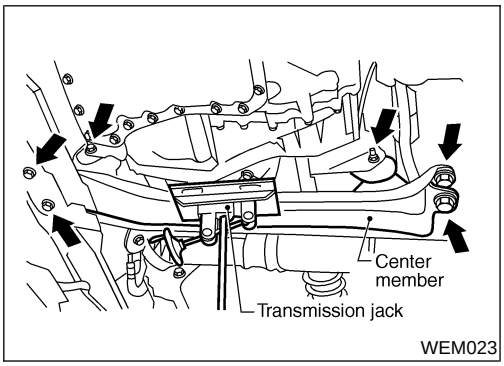

14. Remove center member.
15. Remove generator and adjusting bracket.
16. Remove engine mounting bolts from both sides, then slowly lower transmission jack.
17. Remove engine with transaxle.

INSTALLATION

NIEM0022S02

1. Install in the reverse order of removal.

Components

NIEM0023

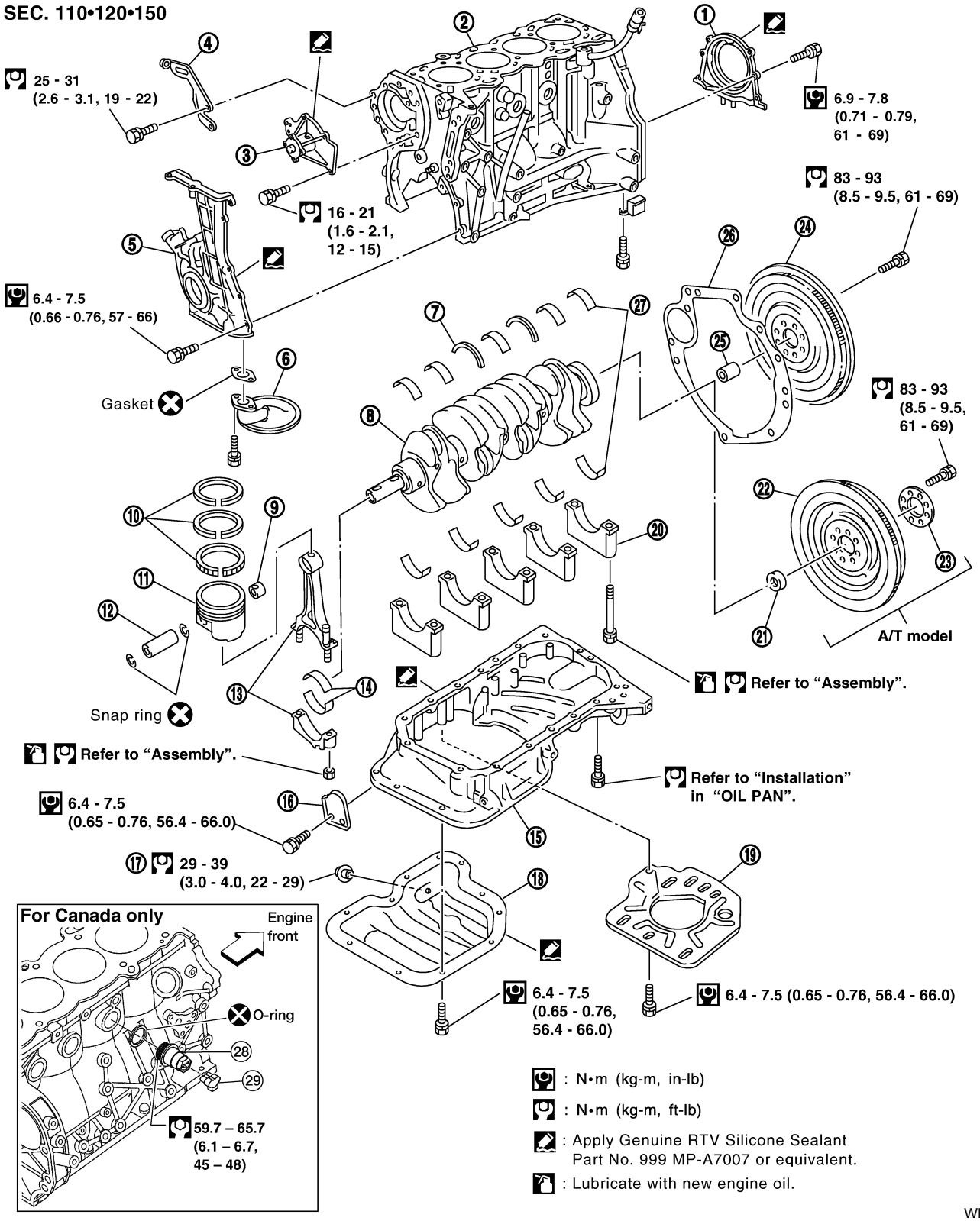

WEM148

1. Rear oil seal retainer
2. Cylinder block
3. Water pump
4. Power steering oil pump adjusting bar
5. Front cover with oil pump
6. Oil strainer
7. Thrust bearing
8. Crankshaft
9. Connecting rod bushing
10. Piston rings
11. Piston
12. Piston pin
13. Connecting rod
14. Connecting rod bearing
15. Aluminum oil pan
16. Rear cover plate
17. Oil pan drain plug

18. Steel oil pan
19. Baffle plate
20. Main bearing cap
21. Pilot converter
22. Drive plate
23. Reinforcement plate
24. Flywheel
25. Pilot bushing
26. Rear plate
27. Main bearing
28. Block heater (Canada only)
29. Connector protective cap (Canada only)

Removal and Installation

NIEM0024

CAUTION:

- **When installing sliding parts (bearings, pistons, etc.), lubricate contacting surfaces with new engine oil.**
- **Place removed parts such as bearings and bearing caps in their proper order and direction.**
- **When installing connecting rod nuts and main bearing cap bolts, apply new engine oil to threads and seating surfaces.**
- **Do not allow any magnetic materials to contact the ring gear teeth of flywheel or drive plate.**

Disassembly

NIEM0025

PISTON AND CRANKSHAFT

NIEM0025S01

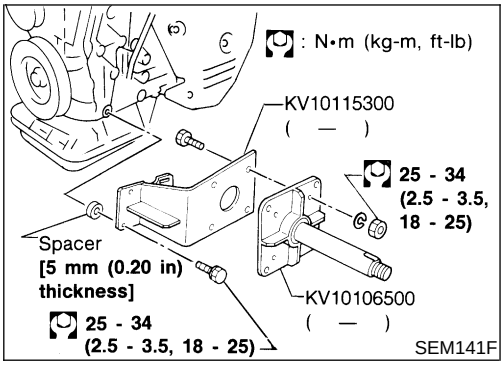

1. Place engine on engine stand (ST0501S000) using engine stand shaft (KV10106500) and engine sub-attachment (KV10115300).
2. Remove cylinder head and timing chain.
   Refer to "Removal", EM-106.
3. Remove oil pan.
   Refer to "Components", EM-89.

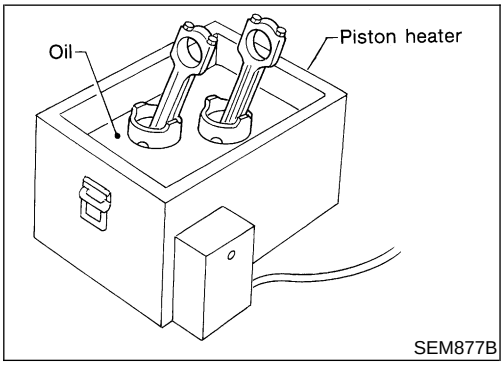

4. Remove pistons with connecting rods.

- To disassemble piston and connecting rod, first remove snap rings. Heat piston to 60 to 70°C (140 to 158°F) then use piston pin press to remove pin.
- **When piston rings are not replaced, make sure that piston rings are mounted in their original positions.**
- **When replacing piston rings, if there is no punchmark, install with either side up.**

5. Remove rear oil seal retainer.

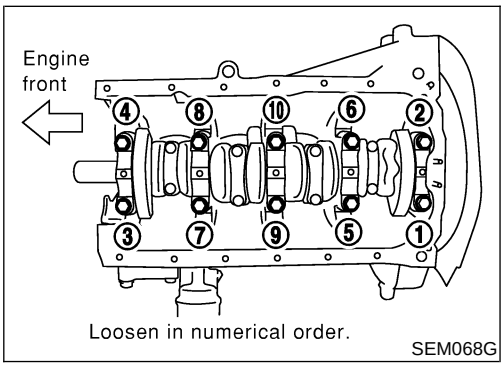

6. Remove main bearing cap and crankshaft as shown.

- **Bolts should be loosened in two or three steps.**

Inspection

NIEM0026

PISTON AND PISTON PIN CLEARANCE

NIEM0026S01

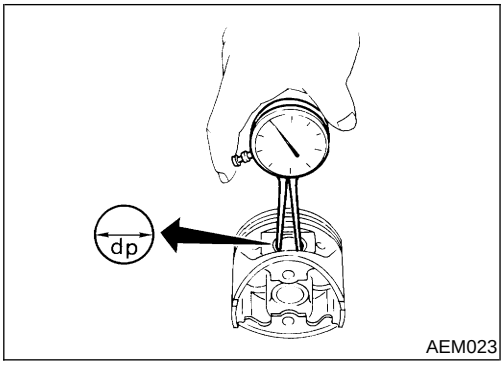

AEM023

1. Measure inner diameter of piston pin hole “dp”.
   Standard diameter “dp”:
   21.993 - 22.005 mm (0.8659 - 0.8663 in)

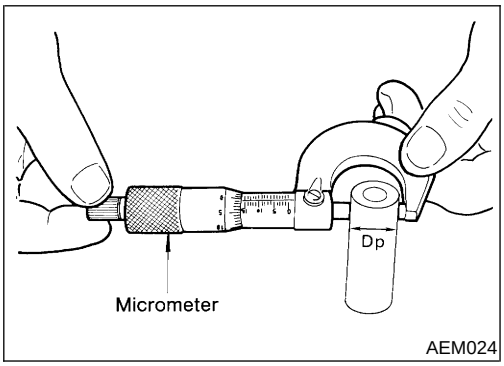

AEM024

2. Measure outer diameter of piston pin “Dp”.
   Standard diameter “Dp”:
   21.989 - 22.001 mm (0.8657 - 0.8622 in)
3. Calculate interference fit of piston pin to piston.
   Dp − dp: 0.002 - 0.006 mm (0.0001 - 0.0002 in)
   If it exceeds the above value, replace piston assembly with pin.

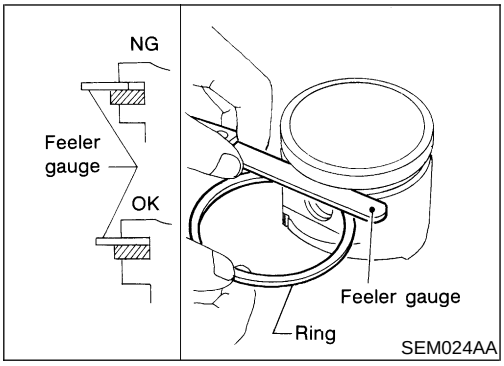

SEM024AA

PISTON RING SIDE CLEARANCE

NIEM0026S02

Side clearance:
- **Top ring**
  - **0.040 - 0.080 mm (0.0016 - 0.0031 in)**
- **2nd ring**
  - **0.030 - 0.070 mm (0.0012 - 0.0028 in)**
- **Oil ring**
  - **0.065 - 0.135 mm (0.0026 - 0.0053 in)**

Max. limit of side clearance:
- **Top and 2nd ring**
  - **0.1 mm (0.004 in)**
- **Oil ring**
  - **—**

If out of specification, replace piston ring. If clearance exceeds maximum limit with new ring, replace piston.

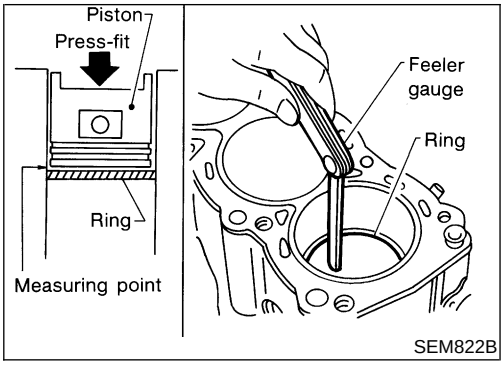

SEM822B

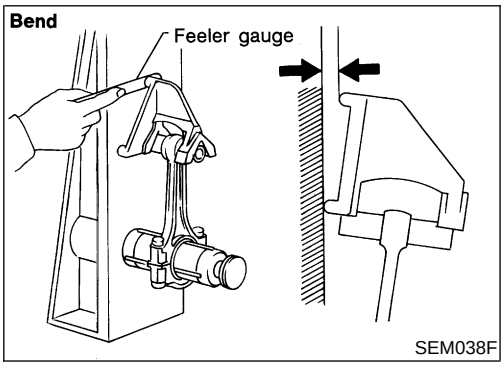

SEM038F

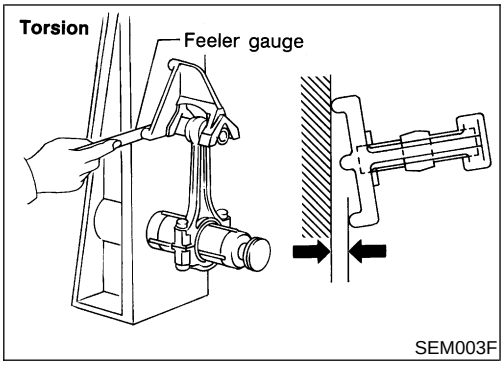

SEM003F

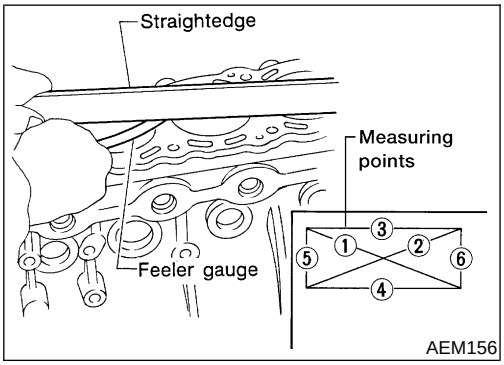

AEM156

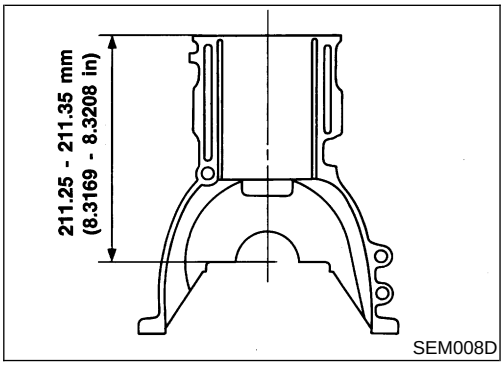

SEM008D

PISTON RING END GAP

NIEM0026S03

End gap:

Top ring 0.20 - 0.39 mm (0.0079 - 0.0154 in)
2nd ring 0.35 - 0.59 mm (0.0138 - 0.0232 in)
Oil ring 0.20 - 0.69 mm (0.0079 - 0.0272 in)

Max. limit of ring gap:

Top ring 0.53 mm (0.0209 in)
2nd ring 0.7 mm (0.0276 in)
Oil ring 0.95 mm (0.0374 in)

If out of specification, replace piston ring. If gap exceeds maximum limit with a new ring, rebore cylinder and use oversized piston and piston rings. Refer to "PISTON", EM-150.

- When replacing the piston, check cylinder block surface for scratches or seizure. If scratches or seizure are found, hone or replace the cylinder block.

CONNECTING ROD BEND AND TORSION

NIEM0026S04

Bend:

Limit 0.15 mm (0.0059 in)
per 100 mm (3.94 in) length

Torsion:

Limit 0.30 mm (0.0118 in)
per 100 mm (3.94 in) length

If it exceeds the limit, replace connecting rod assembly.

CYLINDER BLOCK DISTORTION AND WEAR

NIEM0026S05

Clean upper surface of cylinder block.
Use a reliable straightedge and feeler gauge to check the flatness of cylinder block surface. Check along six positions shown in figure.

Block surface flatness:

Standard Less than 0.03 mm (0.0012 in)
Limit 0.10 mm (0.0039 in)

If out of specification, resurface it.
The limit for cylinder block resurfacing is determined by the amount of cylinder head resurfacing.

Amount of cylinder head resurfacing is "A".
Amount of cylinder block resurfacing is "B".

The maximum limit is as follows:

A + B = 0.2 mm (0.0079 in)

Nominal cylinder block height from crankshaft center:

211.25 - 211.35 mm (8.3169 - 8.3208 in)

If necessary, replace cylinder block.

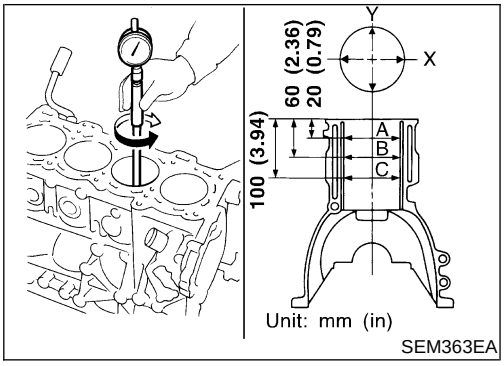

SEM363EA

PISTON-TO-BORE CLEARANCE

NIEM0026S06

1. Using a bore gauge, measure cylinder bore for wear, out-of-round and taper.

   Standard inner diameter. Refer to "Cylinder Block", EM-149.

   Wear limit:

   0.20 mm (0.0079 in)

   Out-of-round (X − Y) standard:

   0.015 mm (0.0006 in)

   Taper (A − B and A − C) standard:

   0.010 mm (0.0004 in)

   If it exceeds the limit, rebore all cylinders. Replace cylinder block if necessary.

2. Check for score and seizure. If seizure is found, hone it.

- **If cylinder block and piston are replaced, match piston grade with grade number on cylinder block upper surface.**

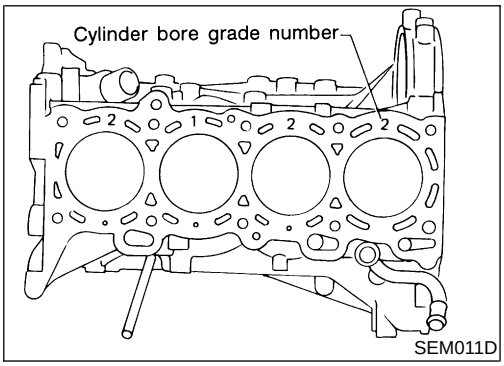

SEM011D

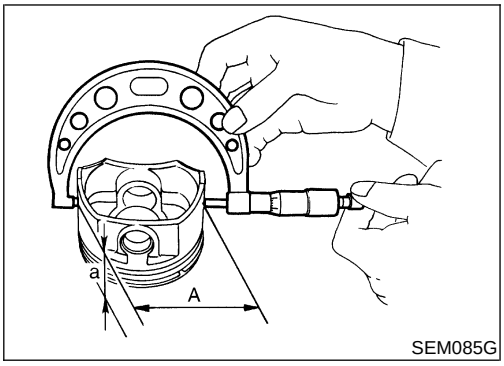

SEM085G

3. Measure piston skirt diameter.

   Piston diameter "A": Refer to "PISTON", EM-150.

   Measuring point "a" (Distance from the top):

   45.0 mm (1.772 in)

4. Check that piston-to-bore clearance is within specification.

   Piston-to-bore clearance = bore measurement "C" − Piston diameter "A":

   0.010 - 0.030 mm (0.0004 - 0.0012 in)

5. Determine piston oversize according to amount of cylinder wear.

Oversize pistons are available for service. Refer to "PISTON", EM-150.

6. Cylinder bore size is determined by adding piston-to-bore clearance to piston diameter "A".

   Rebored size calculation:

   D = A + B − C

   where,

   D: Bored diameter

   A: Piston diameter as measured

   B: Piston-to-bore clearance

   C: Honing allowance 0.02 mm (0.0008 in)

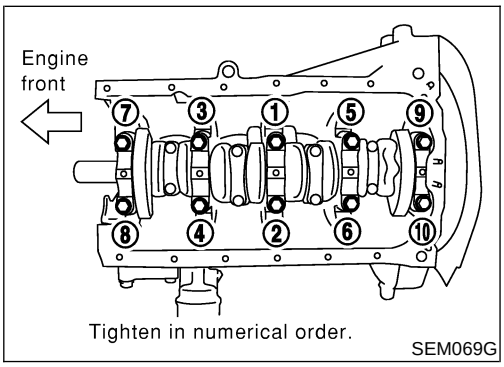

SEM069G

7. Install main bearing caps and tighten to the specified torque. This will prevent distortion of cylinder bores, otherwise cylinder bores may be distorted in final assembly.
8. Cut cylinder bores.

- **When any cylinder needs boring, all other cylinders must also be bored.**
- **Do not cut too much out of cylinder bore at a time. Cut only 0.05 mm (0.0020 in) or so at a time.**

9. Hone cylinders to obtain specified piston-to-bore clearance.
10. Measure finished cylinder bore for out-of-round and taper.
- **Measurement should be done after cylinder bore cools down.**

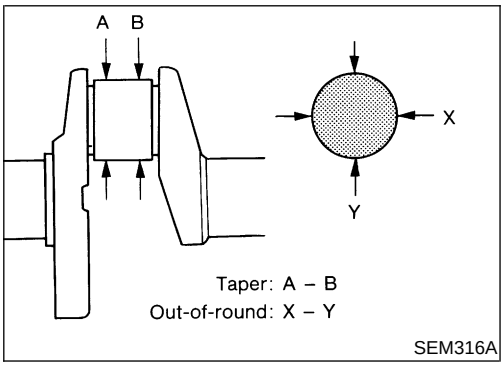

SEM316A

CRANKSHAFT

NIEM0026S07

1. Check crankshaft main and pin journals for score, wear or cracks.
2. With a micrometer, measure journals for taper and out-of-round.

Out-of-round (X − Y) and Taper (A − B):
Main journal: Less than 0.005 mm (0.0002 in)
Pin journal: Less than 0.003 mm (0.0001 in)

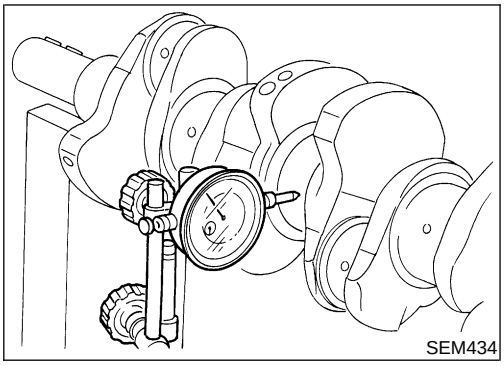
SEM434

3. Measure crankshaft runout.

Runout Limit (Total indicator reading):
Less than 0.05 mm (0.0020 in)

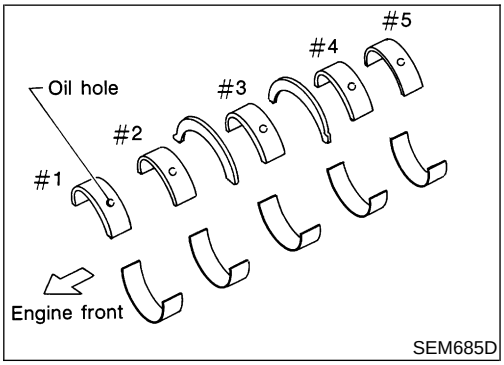

SEM685D

BEARING CLEARANCE

NIEM0026S08

- Use Method A or Method B. Method A is preferred because it is more accurate.

Method A (Using bore gauge and micrometer)

Main bearing

NIEM0026S0801

1. Set main bearings in their proper positions on cylinder block and main bearing cap.
2. Install main bearing cap and main bearing beam to cylinder block.

Tighten all bolts in correct order in two or three stages. Refer to "CRANKSHAFT", EM-140.

3. Measure inner diameter "A" of each main bearing.

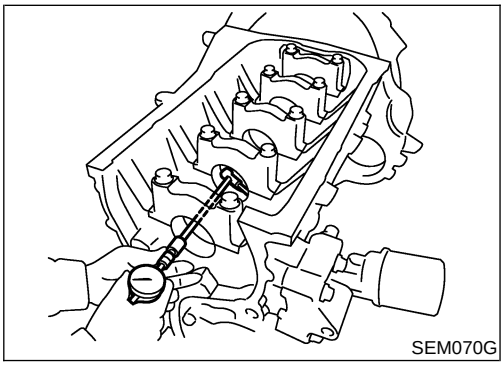
SEM070G

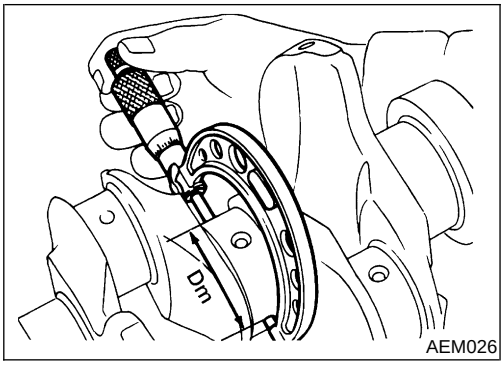

AEM026

4. Measure outer diameter "Dm" of each crankshaft main journal.
5. Calculate main bearing clearance.

Main bearing clearance = A − Dm

Standard: 0.004 - 0.022 mm (0.0002 - 0.0009 in)

Limit: 0.050 mm (0.0020 in)

If it exceeds the limit, replace bearing.

- If clearance cannot be adjusted within the standard of any bearing, grind crankshaft main journal and use undersized bearing.

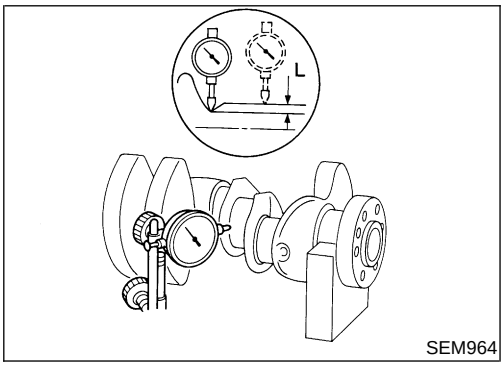

SEM964

- **When grinding crankshaft journal, confirm that "L" dimension in fillet roll is more than the specified limit.**

  "L": 0.05 mm (0.002 in)
- **Refer to "Crankshaft", EM-152 for grinding crankshaft and available service parts.**

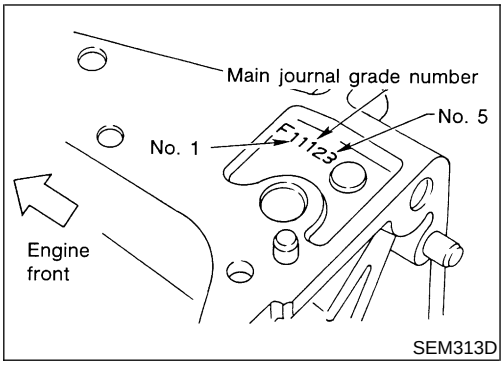

SEM313D

- If crankshaft is replaced, select thickness of main bearings as follows:

a. Grade number of each cylinder block main journal is punched on the respective cylinder block. These numbers are punched in either Arabic or Roman numerals.

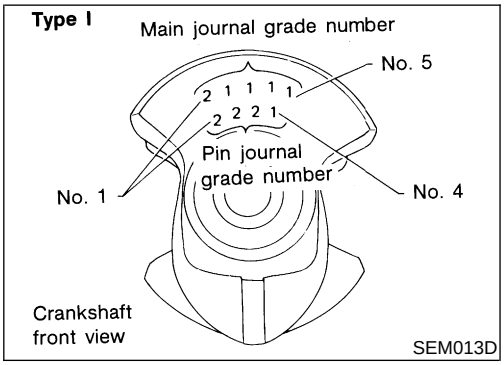

SEM013D

b. Grade number of each crankshaft main journal is punched on the respective crankshaft. These numbers are punched in either Arabic or Roman numerals.

c. Select main bearing with suitable thickness according to the following table.

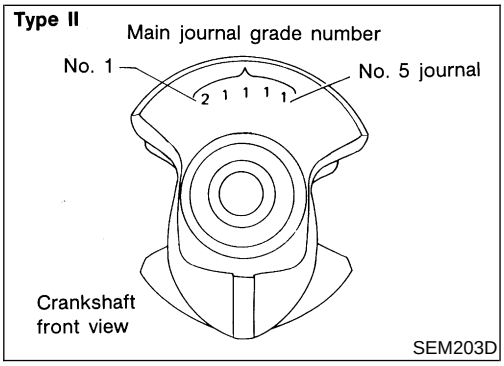

SEM203D

How to Select Main Bearings
(Identification mark and color)

NIEM0026S0802

Crankshaft main journal grade number	Cylinder block main journal grade number			
	0	1 or I	2 or II	3 or III
0	0 (A, Black)	1 (B, Brown)	2 (C, Green)	3 (D, Yellow)
1 or I	1 (B, Brown)	2 (C, Green)	3 (D, Yellow)	4 (E, Blue)
2 or II	2 (C, Green)	3 (D, Yellow)	4 (E, Blue)	5 (F, Pink)
3 or III	3 (D, Yellow)	4 (E, Blue)	5 (F, Pink)	6 (G, No color)

For example:

Cylinder block main journal grade number: 1
Crankshaft main journal grade number: 2
Main bearing grade number =
1 + 2 = 3 (D, Yellow)

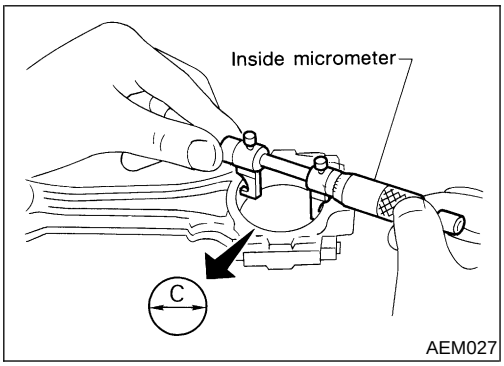

AEM027

Connecting Rod Bearing (Big end)

NIEM0026S0803

1. Install connecting rod bearing to connecting rod and cap.
2. Install connecting rod cap to connecting rod.

Tighten bolts to the specified torque. Refer to "CRANKSHAFT", EM-140.

3. Measure inner diameter "C" of each bearing.

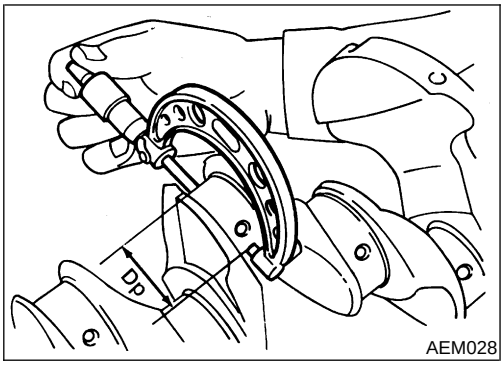

AEM028

4. Measure outer diameter "Dp" of corresponding crankshaft pin journal.
5. Calculate connecting rod bearing clearance.

Connecting rod bearing clearance = C − Dp
Standard: 0.020 - 0.045 mm (0.0008 - 0.0018 in)
Limit: 0.065 mm (0.0026 in)

If it exceeds the limit, replace bearing.

- If clearance cannot be adjusted within the standard of any bearing, grind crankshaft journal and use undersized bearing. Refer to "BEARING CLEARANCE", EM-135 for fillet roll remarks, grinding crankshaft and available service parts.
- If crankshaft is replaced with a new one, select connecting rod bearing according to the following table.

Connecting rod bearing grade number:
These numbers are punched in either Arabic or Roman numerals.

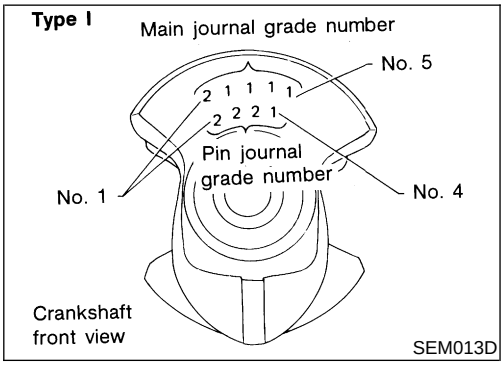

SEM013D

Crank pin grade number	Connecting rod bearing grade number
0	0
1 or I	1
2 or II	2

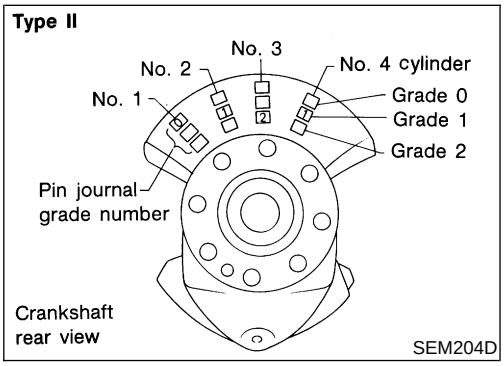

SEM204D

Identification color:
Grade 0; No color
Grade 1; Black
Grade 2; Brown

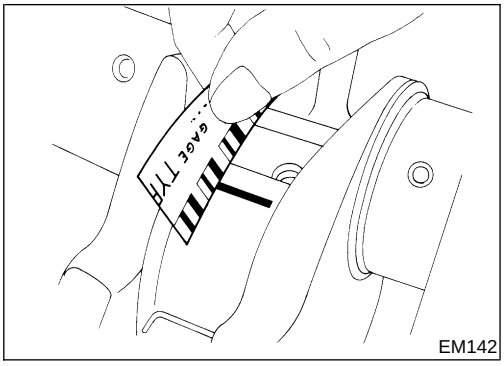

EM142

Method B (Using Plastigage)

CAUTION:

- **Do not turn crankshaft or connecting rod while Plastigage is being inserted.**
- **If incorrect bearing clearance exists, use a thicker or undersized main bearing to ensure specified clearance.**

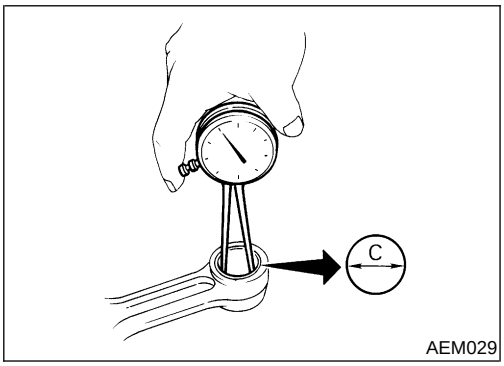

AEM029

CONNECTING ROD BUSHING CLEARANCE (SMALL END)

NIEM0026S09

1. Measure inner diameter "C" of bushing.

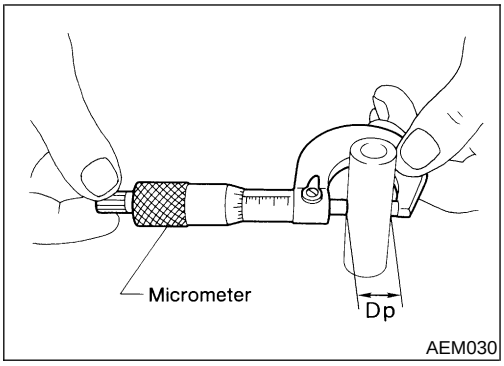

AEM030

2. Measure outer diameter "Dp" of piston pin.
3. Calculate connecting rod bushing clearance.
   Connecting rod bushing clearance = C − Dp
   Standard:
   0.005 - 0.017 mm (0.0002 - 0.0007 in)
   Limit:
   0.023 mm (0.0009 in)
   If it exceeds the limit, replace connecting rod assembly or connecting rod bushing and/or piston set with pin.

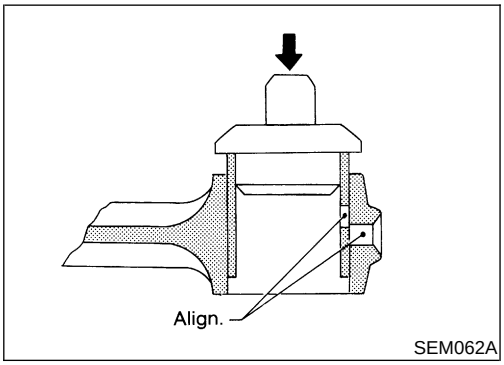

SEM062A

REPLACEMENT OF CONNECTING ROD BUSHING (SMALL END)

NIEM0026S10

1. Drive in small end bushing until it is flush with end surface of rod.

Be sure to align the oil holes.

2. Ream the bushing so that clearance with piston pin is within specification.
   Clearance between connecting rod bushing and piston pin:
   0.005 - 0.017 mm (0.0002 - 0.0007 in)

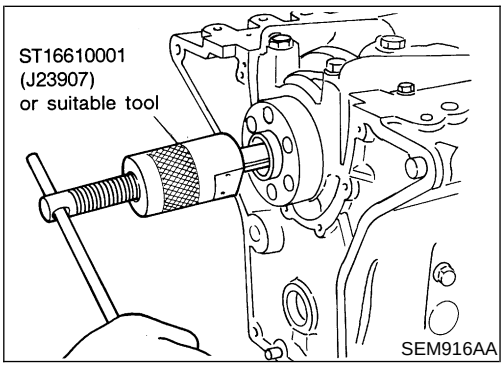

SEM916AA

REPLACEMENT OF PILOT BUSHING (M/T) OR PILOT CONVERTER (A/T)

NIEM0026S11

1. Remove pilot bushing or pilot converter using Tool or suitable tool.

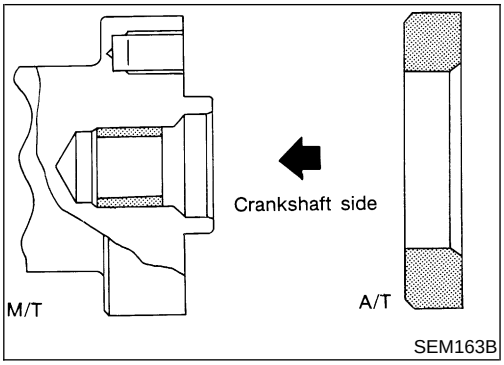

SEM163B

2. Install pilot bushing or pilot converter as shown.

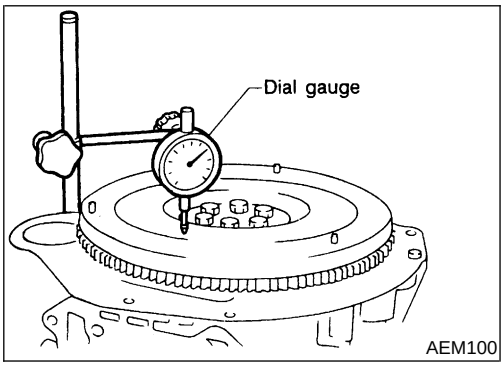

AEM100

FLYWHEEL/DRIVE PLATE RUNOUT

NIEM0026S12

Runout (Total indicator reading):
Flywheel (M/T model)
Less than 0.15 mm (0.006 in)
Drive plate (A/T model)
Less than 0.20 mm (0.008 in)

CAUTION:

- **Be careful not to damage the ring gear teeth.**
- **Check the drive plate for deformation or cracks.**
- **Do not allow any magnetic materials to contact the ring gear teeth.**
- **Do not resurface flywheel. Replace as necessary.**

Assembly

NIEM0027

PISTON

NIEM0027S01

1. Install new snap ring on one side of piston pin hole.

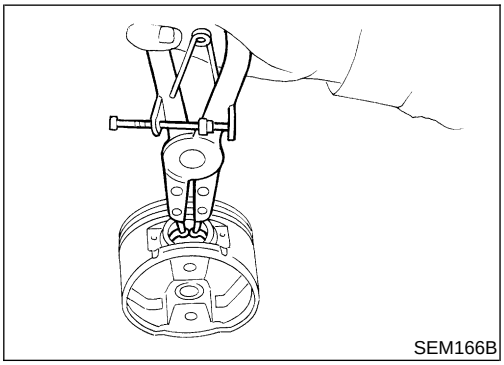
SEM166B

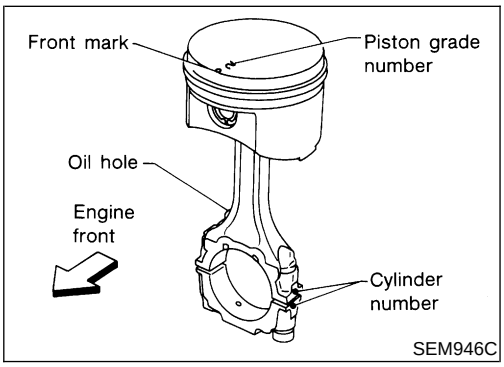

SEM946C

2. Heat piston to 60 to 70°C (140 to 158°F) and assemble piston, piston pin, connecting rod and new snap ring.

- **Align the direction of piston and connecting rod.**
- **Numbers stamped on connecting rod and cap correspond to each cylinder.**
- **After assembly, make sure connecting rod swings smoothly.**

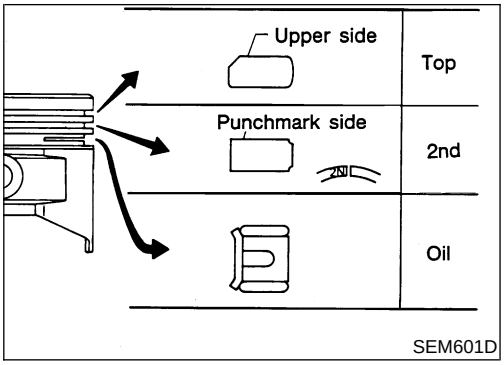

3. Set piston rings as shown.

CAUTION:

- **When piston rings are not replaced, make sure that piston rings are mounted in their original positions.**
- **Install new piston rings either side up if there is no punch mark.**

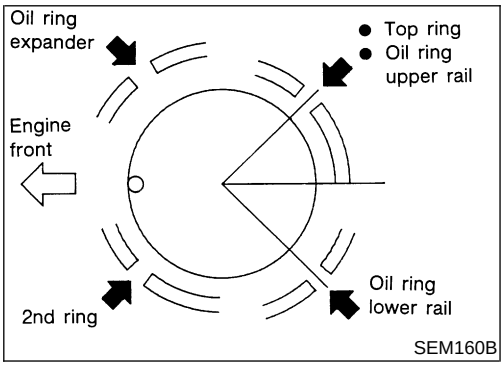

- **Align piston rings so that end gaps are positioned as shown.**

CRANKSHAFT

NIEM0027S02

1. Set main bearings in their proper positions on cylinder block and main bearing cap.

- **Confirm that correct main bearings are selected by using Method A or Method B. Refer to "BEARING CLEARANCE", EM-135.**
- **Apply new engine oil to bearing surfaces.**

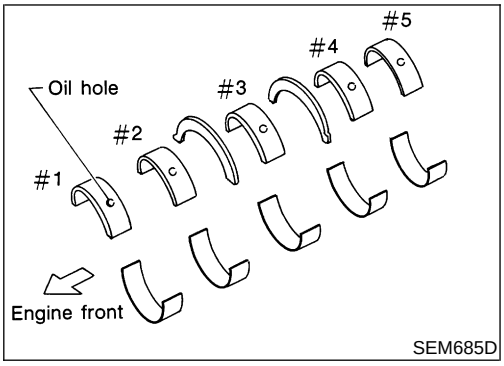

2. Install crankshaft and main bearing caps, then tighten bolts to the specified torque.

- **Prior to tightening bearing cap bolts, shift crankshaft back and forth to properly seat the bearing cap.**
- **Apply new engine oil to threads and seating surfaces of bearing cap bolts before installing them.**
- **Tightening procedure:**

a. **Tighten all bolts to 7 to 12 N·m (0.7 to 1.3 kg-m, 61 to 112 ft-lb).**

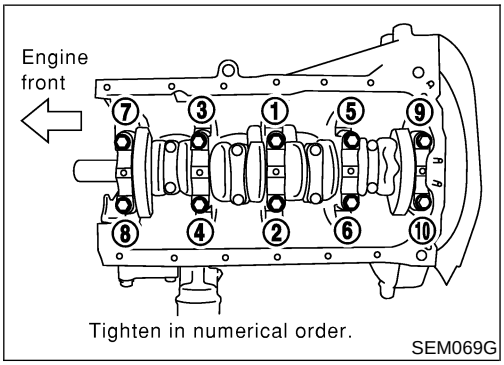

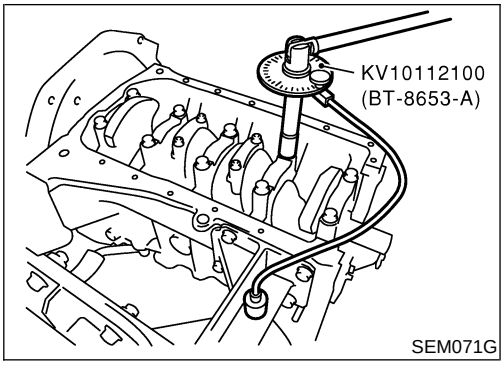

b. **Turn all bolts 70 to 80 degrees clockwise with Tool or suitable angle wrench.**

c. **Loosen all bolts completely.**

d. **Tighten all bolts to 33 to 38 N·m (3.3 to 3.9 kg-m, 24 to 28 ft-lb).**

e. **Turn all bolts 30 to 35 degrees clockwise with Tool or suitable angle wrench.**

- **If an angle wrench is not available, mark all bearing cap bolts on the side facing engine rear. Then, turn each bolt specified degrees clockwise. Confirm angle of degrees with a graduator, not by eye measurement.**
- **After securing bearing cap bolts, make sure crankshaft turns smoothly by hand.**

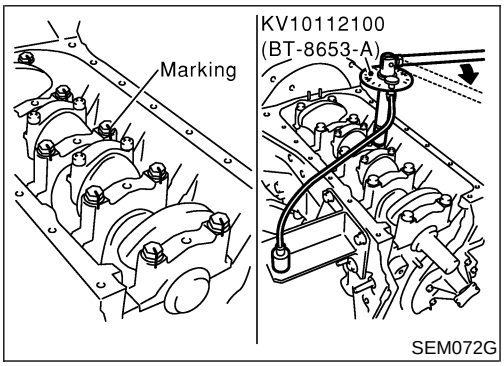

3. Measure crankshaft end play.

Crankshaft end play:
Standard
0.10 - 0.26 mm (0.0039 - 0.0102 in)
Limit
0.30 mm (0.0118 in)

If beyond the limit, replace thrust bearing with new one.

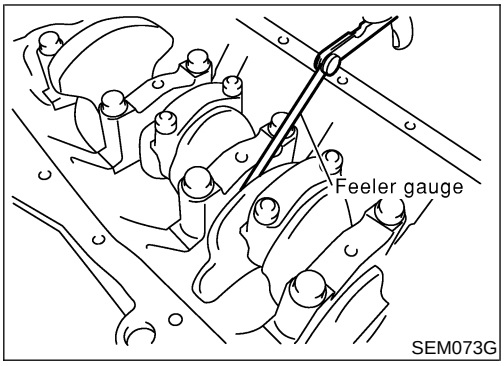

4. Install connecting rod bearings in connecting rods and connecting rod caps.

- **Confirm that correct bearings are used. Refer to "How to Select Main Bearings", EM-136.**
- **Install bearings so that oil hole in connecting rod aligns with oil hole of bearing.**
- **Apply new engine oil to bolt threads and bearing surfaces.**

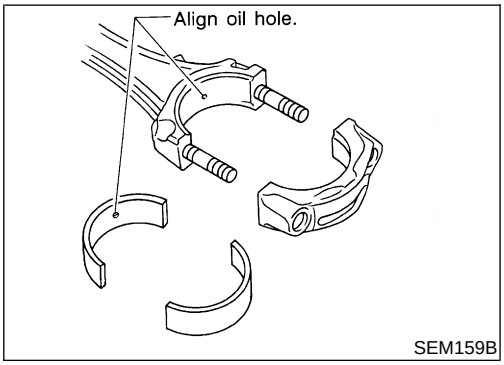

5. Install pistons with connecting rods.

a. Install them into corresponding cylinders with Tool.

- **Make sure connecting rod does not scratch cylinder wall.**
- **Make sure connecting rod bolts do scratch crankshaft pin journals.**
- **Arrange so that front mark on piston head faces engine front.**
- **Apply new engine oil to piston rings and sliding surface of piston.**

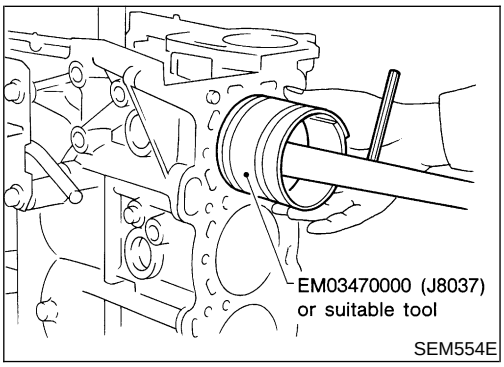

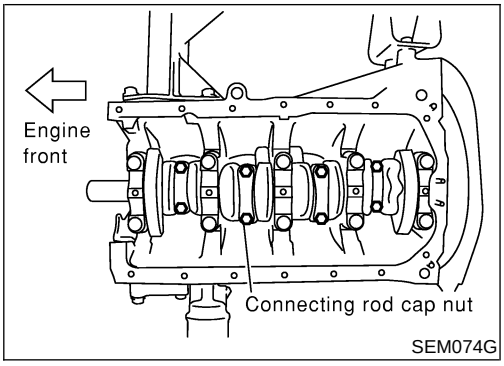

b. Install connecting rod caps.

- **Apply new engine oil to threads and seat surfaces.**

Tighten connecting rod cap nuts using the following procedure:

a) **Tighten nuts to 13.7 to 15.7 N·m (1.4 to 1.6 kg-m, 10.1 to 11.5 ft-lb).**

b) **Turn all nuts 60 to 65 degrees clockwise. If an angle wrench is not available, tighten nuts to 38 to 44 N·m (3.9 to 4.5 kg-m, 28 to 33 ft-lb).**

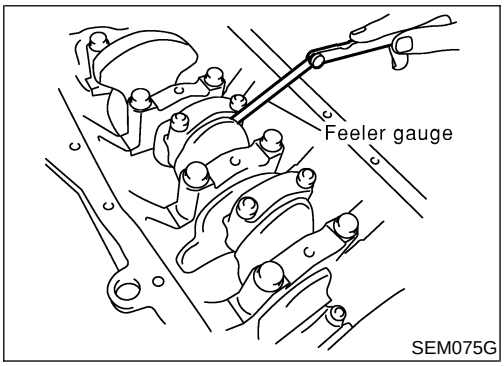

6. Measure connecting rod side clearance.

Connecting rod side clearance:

Standard

0.20 - 0.35 mm (0.0079 - 0.0138 in)

Limit

0.40 mm (0.0157 in)

If beyond the limit, replace connecting rod and/or crankshaft.

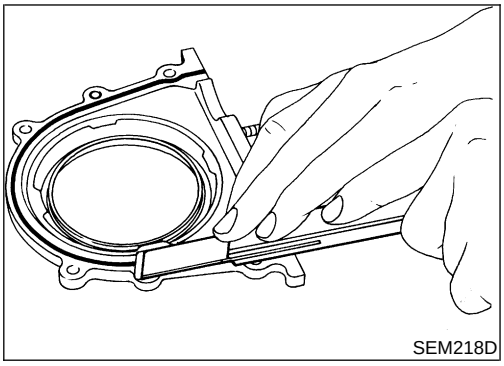

7. Install rear oil seal retainer.

a. Before installing rear oil seal retainer, remove old RTV silicone sealant from mating surface.

- Also remove old RTV silicone sealant from mating surface of cylinder block.

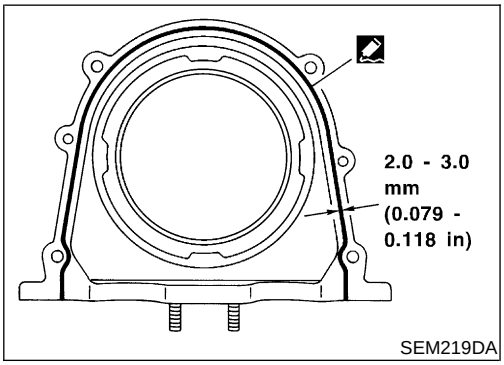

b. Apply a continuous bead of RTV silicone sealant to mating surface of rear oil seal retainer.

- **Use Genuine RTV silicone sealant Part No. 999MP-A7007 or equivalent.**
- **Apply around inner side of bolt holes.**

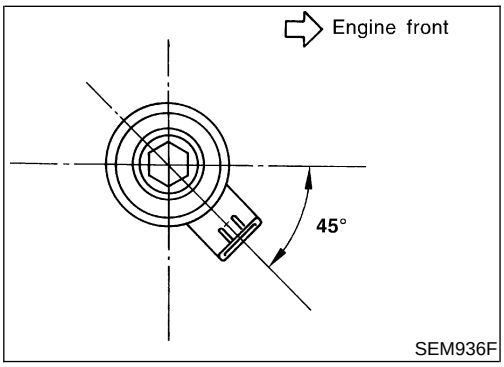

8. Install knock sensor at correct angle.

- For Canadian vehicles, increase installation angle to 90°.

General Specifications

NIEM0028

Cylinder arrangement		In-line 4
Displacement cm^3 (cu in)		1,998 (121.92)
Bore and stroke mm (in)		86 x 86 (3.39 x 3.39)
Valve arrangement		DOHC
Firing order		1-3-4-2
Number of piston rings	Compression	2
	Oil	1
Number of main bearings		5
Compression ratio		9.8

Valve timing
Unit: degree

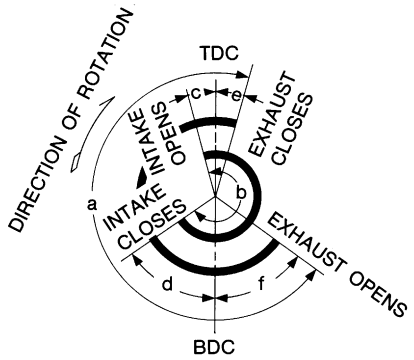

EM120

a	b	c	d	e	f
232°	240°	6°	54°	3°	49°

Compression Pressure

NIEM0029

Unit: kPa (kg/cm^2, psi)/300 rpm

Compression pressure	Standard	1,275 (13.01, 184.9)
	Minimum	1,079 (11.01, 156.5)
	Differential limit between cylinders	98 (1.0, 14)

Cylinder Head

NIEM0030

Unit: mm (in)

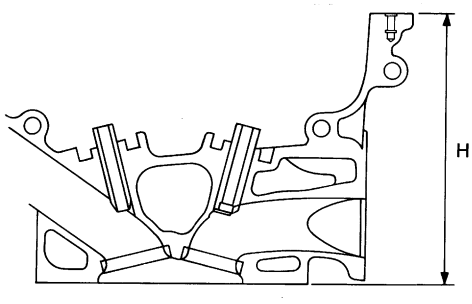

SEM043F

	Standard	Limit
Head surface distortion	Less than 0.03 (0.0012)	0.1 (0.004)
Nominal cylinder head height “H”	136.9 - 137.1 (5.390 - 5.398)	
Resurfacing limit*	0.2 (0.008)*	

*Total amount of cylinder head resurfacing plus cylinder block resurfacing

Valve

VALVE

NIEM0031

NIEM0031S01
Unit: mm (in)

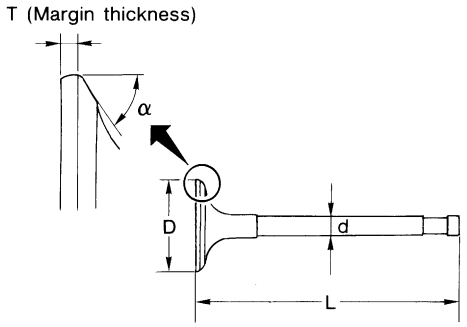

SEM188A

Valve head diameter “D”	Intake	34.0 - 34.3 (1.339 - 1.350)
	Exhaust	30.0 - 30.3 (1.181 - 1.193)
Valve length “L”	Intake	97.04 – 97.16 (3.8205 – 3.8252)
	Exhaust	97.66 - 97.78 (3.8449 - 3.8496)
Valve stem diameter “d”	Intake	5.965 - 5.980 (0.2348 - 0.2354)
	Exhaust	5.945 - 5.960 (0.2341 - 0.2346)
Valve seat angle “α”	Intake	45°15′ - 45°45′
	Exhaust	
Valve margin “T”	Intake	1.1 (0.043)
	Exhaust	1.3 (0.051)
Valve margin “T” limit		More than 0.5 (0.020)
Valve stem end surface grinding limit		Less than 0.2 (0.008)

VALVE SPRING

NIEM0031S02

Free height mm (in)		47.53 (1.8713)
Pressure N (kg, lb) at height mm (in)	Standard	519 - 571 (52.9 - 58.2, 116.7 - 128.4) at 27.0 (1.063)
	Limit	More than 491.8 (50.16, 110.56) at 27.0 (1.063)
Out-of-square mm (in)		Less than 2.1 (0.0827)

HYDRAULIC LASH ADJUSTER (HLA)

NIEM0031S03
Unit: mm (in)

HLA outer diameter	16.980 - 16.993 (0.6685 - 0.6690)
HLA guide hole diameter	17.000 - 17.020 (0.6693 - 0.6701)
Clearance between HLA and HLA guide hole	0.007 - 0.040 (0.0003 - 0.0016)

VALVE GUIDE

NIEM0031S04
Unit: mm (in)

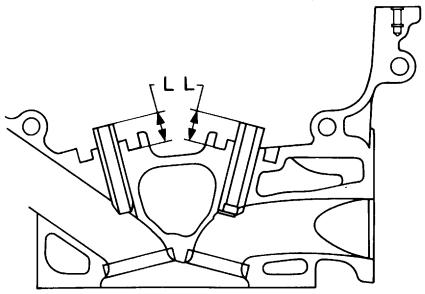

SEM083D

		Standard	Service
Valve guide Outer diameter	Intake	10.023 - 10.034 (0.3946 - 0.3950)	10.223 - 10.234 (0.4025 - 0.4029)
	Exhaust	10.023 - 10.034 (0.3946 - 0.3950)	10.223 - 10.234 (0.4025 - 0.4029)
Valve guide Inner diameter (Finished size)	Intake	6.000 - 6.018 (0.2362 - 0.2369)	
	Exhaust	6.000 - 6.018 (0.2362 - 0.2369)	
Cylinder head valve guide hole diameter	Intake	9.975 - 9.996 (0.3927 - 0.3935)	10.175 - 10.196 (0.4006 - 0.4014)
	Exhaust	9.975 - 9.996 (0.3927 - 0.3935)	10.175 - 10.196 (0.4006 - 0.4014)
Interference fit of valve guide		0.027 - 0.059 (0.0011 - 0.0023)	
		Standard	Limit
Stem to guide clearance	Intake	0.020 - 0.053 (0.0008 - 0.0021)	0.08 (0.0031)
	Exhaust	0.040 - 0.073 (0.0016 - 0.0029)	0.1 (0.004)
Valve deflection limit		0.2 (0.008)	
Projection length "L"		14.0 - 14.2 (0.551 - 0.559)	

VALVE SHIM CLEARANCE ADJUSTMENT

NIEM0031S05
Unit: mm (in)

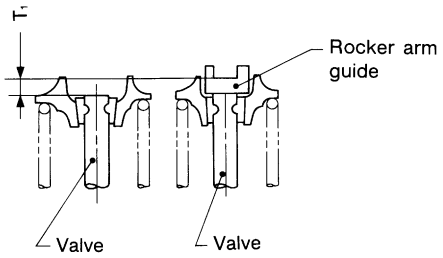

SEM095D

Valve shim clearance (cold) Intake & Exhaust	Less than 0.025 (0.001)
Shim thickness "T_1"	T_1 ± 0.025 (0.001)

AVAILABLE SHIM

NIEM0031S06

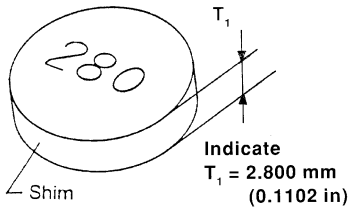

AEM236

Thickness mm (in)	Identification mark
2.800 (0.1102)	28 00
2.825 (0.1112)	28 25
2.850 (0.1122)	28 50
2.875 (0.1132)	28 75
2.900 (0.1142)	29 00
2.925 (0.1152)	29 25
2.950 (0.1161)	29 50
2.975 (0.1171)	29 75
3.000 (0.1181)	30 00
3.025 (0.1191)	30 25
3.050 (0.1201)	30 50
3.075 (0.1211)	30 75
3.100 (0.1220)	31 00
3.125 (0.1230)	31 25
3.150 (0.1240)	31 50
3.175 (0.1250)	31 75
3.200 (0.1260)	32 00

VALVE SEAT

NIEM0031S07
Unit: mm (in)

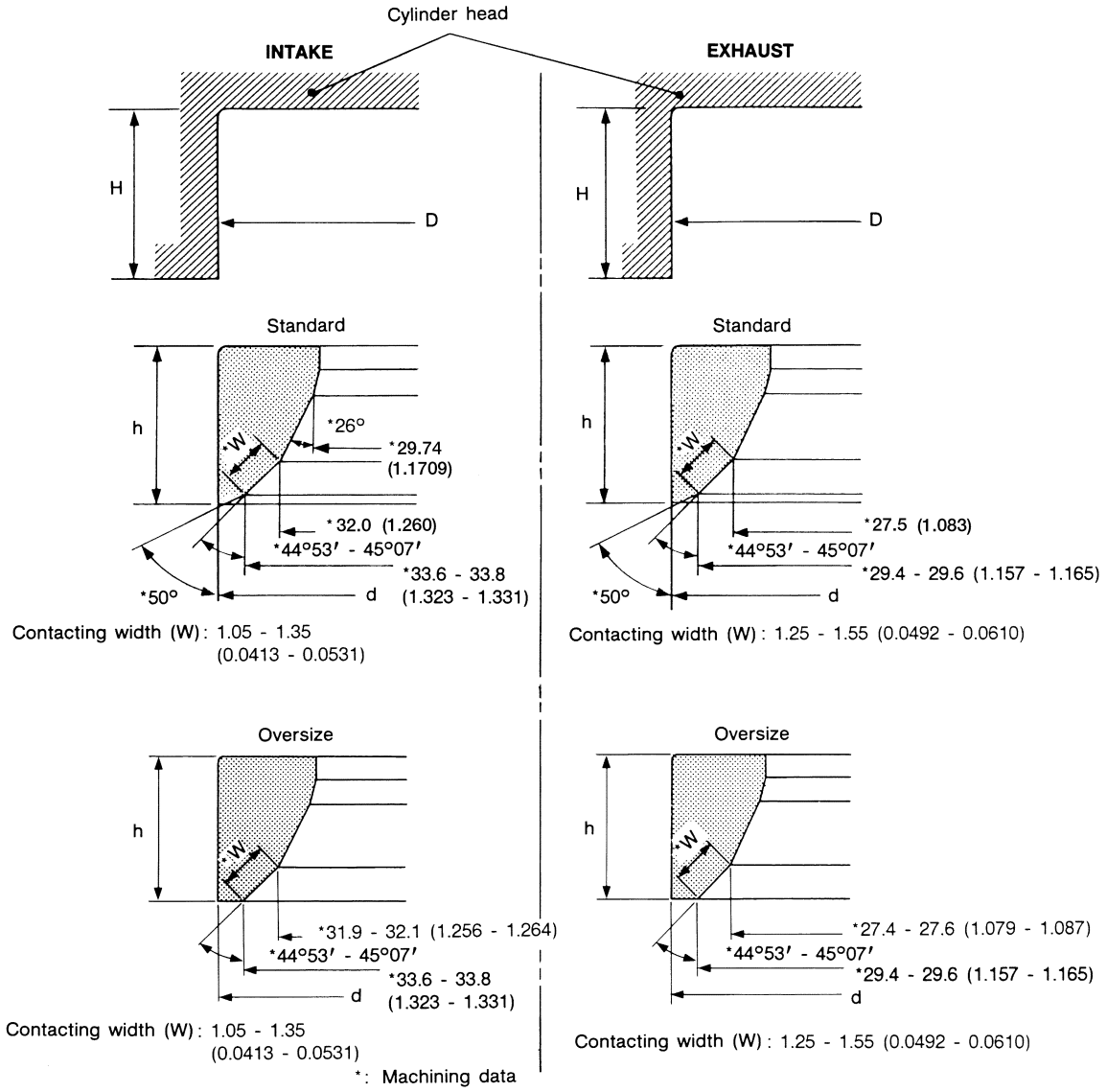

WEM096

		Standard	Service
Cylinder head seat recess diameter (D)	In.	35.000 - 35.016 (1.3780 - 1.3786)	35.500 - 35.516 (1.3976 - 1.3983)
	Ex.	31.000 - 31.016 (1.2205 - 1.2211)	31.500 - 31.516 (1.2402 - 1.2408)
Valve seat interference fit	In.	0.064 - 0.096 (0.0025 - 0.0038)	
	Ex.	0.064 - 0.096 (0.0025 - 0.0038)	
Valve seat outer diameter (d)	In.	35.080 - 35.096 (1.3811 - 1.3817)	35.580 - 35.596 (1.4008 - 1.4014)
	Ex.	31.080 - 31.096 (1.2236 - 1.2242)	31.580 - 31.596 (1.2433 - 1.2439)
Depth (H)	In.	6.25 (0.2461)	
	Ex.	6.25 (0.2461)	
Height (h)		6.2 - 6.3 (0.244 - 0.248)	5.4 - 5.5 (0.213 - 0.217)

VALVE SEAT RESURFACE LIMIT

NIEM0031S08

Unit: mm (in)

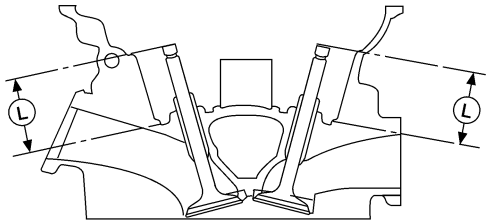

AEM343

Depth (L)	42.74 - 43.26 (1.6827 - 1.7031)

Camshaft and Camshaft Bearing

NIEM0032

Unit: mm (in)

	Standard	Limit
Camshaft journal to bearing clearance	0.030 - 0.071 (0.0012 - 0.0028)	0.15 (0.0059)
Inner diameter of camshaft bearing	28.000 - 28.021 (1.1024 - 1.1032)	—
Outer diameter of camshaft journal	27.935 - 27.955 (1.0998 - 1.1006)	—
Camshaft runout [TIR*]	Less than 0.02 (0.0008)	0.1 (0.004)
Camshaft sprocket runout [TIR*]	Less than 0.25 (0.0098)	—
Camshaft end play	0.055 - 0.139 (0.0022 - 0.0055)	0.20 (0.0079)

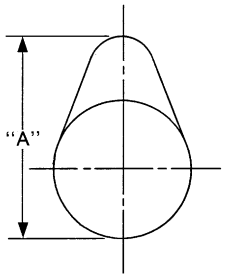

EM671

Cam height "A"	Intake	37.680 - 37.870 (1.4835 - 1.4909)
	Exhaust	37.309 - 37.499 (1.4689 - 1.4763)
Wear limit of cam height		0.2 (0.008)
Valve lift	Intake	9.4 (0.370)
	Exhaust	8.8 (0.346)

*Total indicator reading

Cylinder Block

NIEM0033
Unit: mm (in)

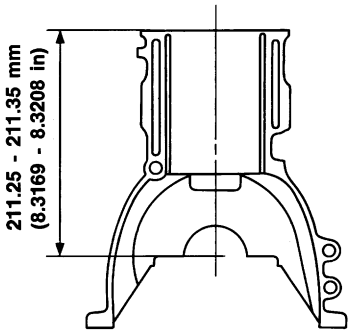

SEM008D

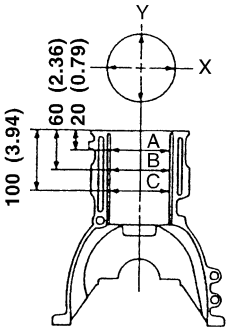

SEM686DB

Nominal cylinder block height from crankshaft center	Standard		211.25 - 211.35 (8.3169 - 8.3208)
Surface flatness	Standard		Less than 0.03 (0.0012)
	Limit		0.10 (0.0039)
Cylinder bore Inner diameter	Standard	Grade No. 1	86.000 - 86.010 (3.3858 - 3.3862)
		Grade No. 2	86.010 - 86.020 (3.3862 - 3.3866)
		Grade No. 3	86.020 - 86.030 (3.3866 - 3.3870)
	Wear limit		0.20 (0.0079)
Out-of-round (X − Y)			Less than 0.015 (0.0006)
Taper (A − B and A − C)			Less than 0.010 (0.0004)
Difference in inner diameter between cylinders	Limit		Less than 0.05 (0.0020)
Main journal inner diameter	Grade No. 0		58.944 - 58.950 (2.3206 - 2.3209)
	Grade No. 1		58.950 - 58.956 (2.3209 - 2.3211)
	Grade No. 2		58.956 - 58.962 (2.3211 - 2.3213)
	Grade No. 3		58.962 - 58.968 (2.3213 - 2.3216)

Piston, Piston Ring and Piston pin

NIEM0034

PISTON

NIEM0034S01
Unit: mm (in)

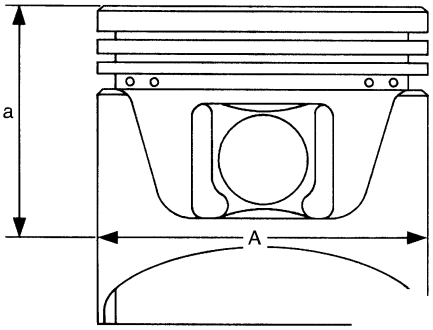

SEM086G

Piston skirt diameter “A” Standard	Grade No. 1	85.980 - 85.990 (3.3850 - 3.3854)
	Grade No. 2	85.990 - 86.000 (3.3854 - 3.3858)
	Grade No. 3	86.000 - 86.010 (3.3858 - 3.3862)
	0.20 (0.0079) oversize (Service)	86.180 - 86.210 (3.3929 - 3.3941)
“a” dimension		45.0 (1.772)
Piston clearance to cylinder block		0.010 - 0.030 (0.0004 - 0.0012)
Piston pin hole diameter		21.993 - 22.005 (0.8659 - 0.8663)

PISTON RING

NIEM0034S02
Unit: mm (in)

Side clearance	Top	Standard	0.040 - 0.080 (0.0016 - 0.0031)
		Limit	0.1 (0.004)
	2nd	Standard	0.030 - 0.070 (0.0012 - 0.0028)
		Limit	0.1 (0.004)
	Oil	Standard	0.065 - 0.135 (0.0026 - 0.0053)
		Limit	—
Ring end gap	Top	Standard	0.20 - 0.39 (0.0079 - 0.0154)
		Limit	0.53 (0.0209)
	2nd	Standard	0.35 - 0.59 (0.0138 - 0.0232)
		Limit	0.7 (0.0276)
	Oil	Standard	0.20 - 0.69 (0.0079 - 0.0272)
		Limit	0.95 (0.0374)

PISTON PIN

NIEM0034S03
Unit: mm (in)

Piston pin outer diameter		21.989 - 22.001 (0.8657 - 0.8622)
Interference fit of piston pin to piston		0.002 - 0.006 (0.0001 - 0.0002)
Piston pin to connecting rod bushing clearance	Standard	0.005 - 0.017 (0.0002 - 0.0007)
	Limit	0.023 (0.0009)

* Values measured at ambient temperature of 20°C (68°F)

Connecting Rod

NIEM0035

Unit: mm (in)

Center distance		136.25 - 136.35 (5.3642 - 5.3681)
Bend [per 100 (3.94)]	Limit	0.15 (0.0059)
Torsion [per 100 (3.94)]	Limit	0.30 (0.0118)
Connecting rod small end inner diameter		24.980 - 25.000 (0.9835 - 0.9843)
Piston pin bushing inner diameter*		22.000 - 22.012 (0.8661 - 0.8666)
Connecting rod big end inner diameter		51.000 - 51.013 (2.0079 - 2.0084)
Side clearance	Standard	0.20 - 0.35 (0.0079 - 0.0138)
	Limit	0.40 (0.0157)

*After installing in connecting rod

Crankshaft

NIEM0036
Unit: mm (in)

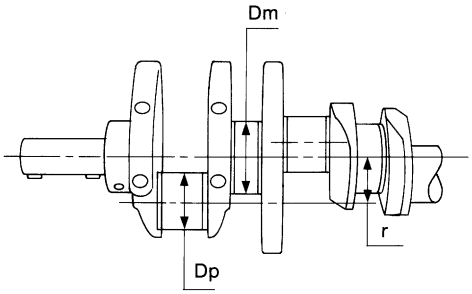

SEM954C

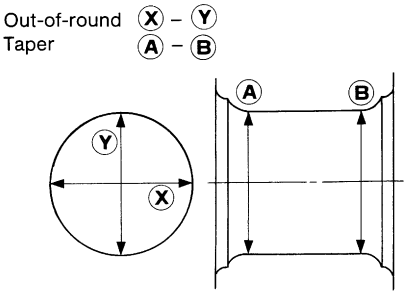

EM715

Main journal dia. “Dm”	Grade No. 0	54.974 - 54.980 (2.1643 - 2.1646)
	Grade No. 1	54.968 - 54.974 (2.1641 - 2.1643)
	Grade No. 2	54.962 - 54.968 (2.1639 - 2.1641)
	Grade No. 3	54.956 - 54.962 (2.1636 - 2.1639)
Pin journal dia. “Dp”	Grade No. 0	47.968 - 47.974 (1.8885 - 1.8887)
	Grade No. 1	47.962 - 47.968 (1.8883 - 1.8885)
	Grade No. 2	47.956 - 47.962 (1.8880 - 1.8883)
Center distance “r”		42.96 - 43.04 (1.6913 - 1.6945)
Out-of-round (X − Y) Standard	Main journal	Less than 0.005 (0.0002)
	Pin journal	Less than 0.003 (0.0001)
Taper (A − B) Standard	Main journal	Less than 0.005 (0.0002)
	Pin journal	Less than 0.003 (0.0001)
Runout [TIR]	Standard	Less than 0.025 (0.0010)
	Limit	Less than 0.05 (0.0020)
Free end play	Standard	0.10 - 0.26 (0.0039 - 0.0102)
	Limit	0.30 (0.0118)
Fillet minimum thickness “L”		0.05 (0.002)

Main Bearing

NIEM0037

STANDARD

NIEM0037S01

Unit: mm (in)

Grade number	Thickness “T”	Width “W”	Identification color (mark)
0	1.977 - 1.980 (0.0778 - 0.0780)	18.9 - 19.1 (0.744 - 0.752)	Black (A)
1	1.980 - 1.983 (0.0780 - 0.0781)		Brown (B)
2	1.983 - 1.986 (0.0781 - 0.0782)		Green (C)
3	1.986 - 1.989 (0.0782 - 0.0783)		Yellow (D)
4	1.989 - 1.992 (0.0783 - 0.0784)		Blue (E)
5	1.992 - 1.995 (0.0784 - 0.0785)		Pink (F)
6	1.995 - 1.998 (0.0785 - 0.0787)		No color (G)

UNDERSIZE

NIEM0037S02

Unit: mm (in)

Undersize	Thickness “T”	Main journal diameter “Dm”
0.25 (0.0098)	2.109 - 2.117 (0.0830 - 0.0833)	Grind so that bearing clearance is the specified value.

Connecting Rod Bearing

NIEM0038

STANDARD SIZE

NIEM0038S01

Unit: mm (in)

Grade number	Thickness “T”	Width “W”	Identification color (mark)
0	1.500 - 1.503 (0.0591 - 0.0592)	16.9 - 17.1 (0.665 - 0.673)	No color (A)
1	1.503 - 1.506 (0.0592 - 0.0593)		Black (B)
2	1.506 - 1.509 (0.0593 - 0.0594)		Brown (C)

UNDERSIZE

NIEM0038S02

Unit: mm (in)

Undersize	Thickness “T”	Crank pin journal diameter “Dp”
0.08 (0.0031)	1.541 - 1.549 (0.0607 - 0.0610)	Grind so that bearing clearance is the specified value.
0.12 (0.0047)	1.561 - 1.569 (0.0615 - 0.0618)	
0.25 (0.0098)	1.626 - 1.634 (0.0640 - 0.0643)	

Bearing Clearance

NIEM0039

Unit: mm (in)

Main bearing clearance	Standard	0.004 - 0.022 (0.0002 - 0.0009)
	Limit	0.05 (0.0020)
Connecting rod bearing clearance	Standard	0.020 - 0.045 (0.0008 - 0.0018)
	Limit	0.065 (0.0026)

Miscellaneous Components

NIEM0040

Unit: mm (in)

Camshaft sprocket runout limit [TIR]	0.25 (0.0098)
Flywheel runout limit [TIR]	0.15 (0.006)
Drive plate runout limit [TIR]	0.20 (0.008)

NOTES