BRAKE SYSTEM

SECTION BR

CONTENTS

PRECAUTIONS 3
Supplemental Restraint System (SRS) "AIR BAG" and "SEAT BELT PRE-TENSIONER"....3
Precautions for Brake System....3
Wiring Diagrams and Trouble Diagnosis....4
PREPARATION 5
Commercial Service Tools 5
NOISE, VIBRATION AND HARSHNESS (NVH) TROUBLESHOOTING 6
NVH Troubleshooting Chart....6
ON-VEHICLE SERVICE 7
Checking Brake Fluid Level....7
Checking Brake Line 7
Changing Brake Fluid 7
Brake Burnishing Procedure....7
Bleeding Brake System 8
BRAKE HYDRAULIC LINE....9
Hydraulic Circuit....9
Removal....9
Inspection....10
Installation....10
DUAL PROPORTIONING VALVE....11
Inspection....11
BRAKE PEDAL AND BRACKET....12
Removal and Installation 12
Inspection....12
Adjustment 12
BRAKE PEDAL HEIGHT....12
STOP LAMP SWITCH AND ASCD CANCEL SWITCH CLEARANCE 13
MASTER CYLINDER....14
Removal....14
Disassembly....14
Inspection....15
Assembly 15
Installation....16
BRAKE BOOSTER....17
On-vehicle Service....17
OPERATING CHECK 17
AIRTIGHT CHECK 17
Removal....17
Inspection....17
OUTPUT ROD LENGTH CHECK 17
Installation....18
VACUUM HOSE....19
Removal and Installation 19
Inspection....19
HOSES AND CONNECTORS 19
CHECK VALVE 19
FRONT DISC BRAKE 20
Component 20
Pad Replacement 20
Removal....21
Disassembly....21
Inspection....22
CALIPER....22
ROTOR....22
Assembly 23
Installation....23
REAR DISC BRAKE....24
Component 24
Pad Replacement 24
Removal....26
Disassembly....27
Inspection....28
CALIPER....28
ROTOR....28
Assembly 29
Installation....31
REAR DRUM BRAKE 32
Components....32
Removal....32
Inspection....33
WHEEL CYLINDER....33
WHEEL CYLINDER OVERHAUL....33
DRUM....34
LINING....34
Installation....35
PARKING BRAKE CONTROL....36

CONTENTS (Cont'd)

Components....36
Removal and Installation....36
Inspection....36
Adjustment....37

ABS

DESCRIPTION....38
Purpose....38
Operation....38
ABS Hydraulic Circuit....38
System Components....39
System Description....39
SENSOR....39
CONTROL UNIT (BUILT-IN ABS ACTUATOR AND ELECTRIC UNIT)....39
ABS ACTUATOR AND ELECTRIC UNIT....40
Component Parts and Harness Connector Location....41
Schematic....42
Wiring Diagram - ABS -....43
ON BOARD DIAGNOSTIC SYSTEM DESCRIPTION....46
Self-diagnosis....46
FUNCTION....46
SELF-DIAGNOSIS PROCEDURE....46
HOW TO READ SELF-DIAGNOSTIC RESULTS (MALFUNCTION CODES)....47
HOW TO ERASE SELF-DIAGNOSTIC RESULTS (MALFUNCTION CODES)....47
CONSULT-II....48
CONSULT-II APPLICATION TO ABS....48
ECU (ABS CONTROL UNIT) PART NUMBER MODE....48
CONSULT-II Inspection Procedure....49
SELF-DIAGNOSIS PROCEDURE....49
SELF-DIAGNOSTIC RESULTS MODE....50
DATA MONITOR PROCEDURE....51
ACTIVE TEST PROCEDURE....51
DATA MONITOR MODE....52
ACTIVE TEST MODE....53
TROUBLE DIAGNOSIS - INTRODUCTION....54
How to Perform Trouble Diagnoses for Quick and Accurate Repair....54
INTRODUCTION....54
TROUBLE DIAGNOSIS - BASIC INSPECTION....55
Preliminary Check....55
Ground Circuit Check....58
ABS ACTUATOR AND ELECTRIC UNIT GROUND....58
TROUBLE DIAGNOSIS - GENERAL DESCRIPTION....59
Malfunction Code/Symptom Chart....59
TROUBLE DIAGNOSES FOR SELF-DIAGNOSTIC ITEMS....60
Wheel Sensor or Rotor....60
DIAGNOSTIC PROCEDURE....60
ABS Actuator Solenoid Valve and Solenoid Valve Relay....63
DIAGNOSTIC PROCEDURE....63
Motor Relay or Motor....65
DIAGNOSTIC PROCEDURE....65
Low Voltage....67
DIAGNOSTIC PROCEDURE....67
Control Unit....69
DIAGNOSTIC PROCEDURE....69
TROUBLE DIAGNOSES FOR SYMPTOMS....70
1. ABS Works Frequently....70
2. Unexpected Pedal Action....70
3. Long Stopping Distance....71
4. ABS Does Not Work....73
5. Pedal Vibration and Noise....73
6. Warning Lamp Does Not Come On When Ignition Switch Is Turned On....74
7. Warning Lamp Stays On When Ignition Switch Is Turned On....76
REMOVAL AND INSTALLATION....79
Front Wheel Sensor....79
Rear Wheel Sensor....79
Sensor Rotor....80
REMOVAL....80
INSTALLATION....80
Actuator....81
REMOVAL....81
INSTALLATION....81

SERVICE DATA AND SPECIFICATIONS (SDS)....82
General Specifications....82
Disc Brake....82
Drum Brake....82
Brake Pedal....82
Parking Brake....83

Supplemental Restraint System (SRS) "AIR BAG" and "SEAT BELT PRE-TENSIONER"

NIBR0001

The Supplemental Restraint System such as "AIR BAG" and "SEAT BELT PRE-TENSIONER" used along with a seat belt, helps to reduce the risk or severity of injury to the driver and front passenger for certain types of collision. The SRS system composition which is available to NISSAN MODEL B15 is as follows:

- For a frontal collision
  The Supplemental Restraint System consists of driver air bag module (located in the center of the steering wheel), front passenger air bag module (located on the instrument panel on passenger side), front seat belt pre-tensioners, a diagnosis sensor unit, warning lamp, wiring harness and spiral cable.
- For a side collision
  The Supplemental Restraint System consists of front side air bag module (located in the outer side of front seat), side air bag (satellite) sensor, diagnosis sensor unit (one of components of air bags for a frontal collision), wiring harness, warning lamp (one of components of air bags for a frontal collision).

Information necessary to service the system safely is included in the **RS section** of this Service Manual.

WARNING:

- **To avoid rendering the SRS inoperative, which could increase the risk of personal injury or death in the event of a collision which would result in air bag inflation, all maintenance should be performed by an authorized NISSAN dealer.**
- **Improper maintenance, including incorrect removal and installation of the SRS, can lead to personal injury caused by unintentional activation of the system. For removal of Spiral Cable and Air Bag Module, see the RS section.**
- **Do not use electrical test equipment on any circuit related to the SRS unless instructed to in this Service Manual. Spiral cable and wiring harnesses covered with yellow insulation tape either just before the harness connectors or for the complete harness are related to the SRS.**

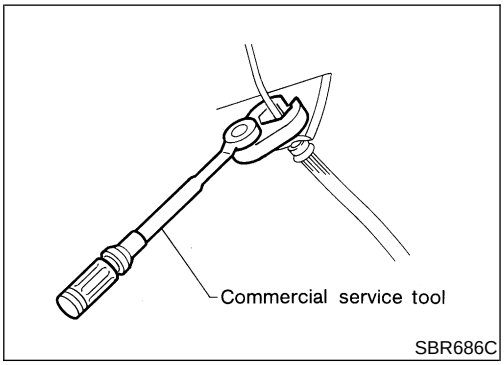

Precautions for Brake System

NIBR0002

- **Recommended fluid is brake fluid "DOT 3".**
- **Never reuse drained brake fluid.**
- **Be careful not to splash brake fluid on painted areas.**
- **To clean or wash all parts of master cylinder, disc brake caliper and wheel cylinder, use clean brake fluid.**
- **Never use mineral oils such as gasoline or kerosene. They will ruin rubber parts of the hydraulic system.**
- **Use flare nut wrench when removing and installing brake tube.**
- **Always torque brake lines when installing.**
- **Burnish the brake contact surfaces after refinishing or replacing drums or rotors, after replacing pads or linings, or if a soft pedal occurs at very low mileage.**
  Refer to "Brake Burnishing Procedure", BR-7.

WARNING:

- **Clean brake pads and shoes with a waste cloth, then wipe with a dust collector.**

Wiring Diagrams and Trouble Diagnosis

NIBR0003

When you read wiring diagrams, refer to the following:

- ***GI-11***, “HOW TO READ WIRING DIAGRAMS”
- ***EL-9***, “POWER SUPPLY ROUTING”

When you perform trouble diagnosis, refer to the following:

- ***GI-36***, “How To Follow Test Groups In Trouble Diagnoses”
- ***GI-25***, “HOW TO PERFORM EFFICIENT DIAGNOSIS FOR AN ELECTRICAL INCIDENT”

Commercial Service Tools

NIBR0004

Tool name	Description	
1 Flare nut crowfoot 2 Torque wrench	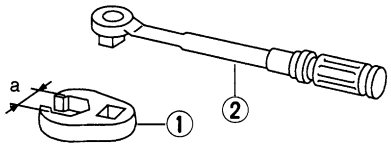 NT360	Removing and installing each brake piping **a: 10 mm (0.39 in)**
Brake fluid pressure gauge	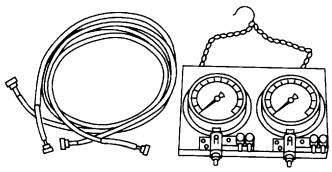 NT151	Measuring brake fluid pressure

NVH Troubleshooting Chart

NIBR0005S01

Use the chart below to help you find the cause of the symptom. If necessary, repair or replace these parts.

Reference page			BR-20, 24	BR-20, 24	BR-20, 24	—	—	BR-22, 28	—	—	—	BR-22, 28	***AX-3***, NVH	***AX-3***, NVH	***SU-4***	***SU-4***	***SU-4***	***ST-5***. NVH
Possible cause and SUSPECTED PARTS			Pads - damaged	Pads - uneven wear	Shims damaged	Rotor imbalance	Rotor damage	Rotor runout	Rotor deformation	Rotor deflection	Rotor rust	Rotor thickness variation	DRIVE SHAFT	AXLE	SUSPENSION	TIRES	ROAD WHEEL	STEERING
Symptom	BRAKE	Noise	X	X	X								X	X	X	X	X	X
		Shake				X							X	X	X	X	X	X
		Shimmy, Judder				X	X	X	X	X	X	X		X	X	X	X	X

X: Applicable

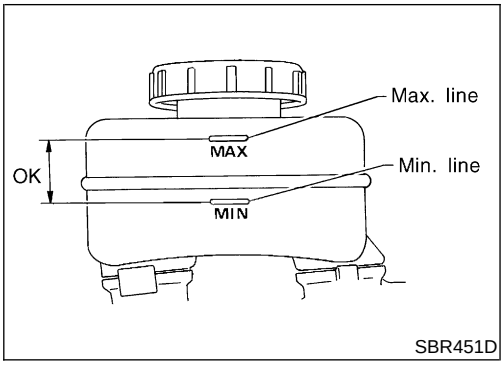

SBR451D

Checking Brake Fluid Level

NIBR0006

- Check fluid level in reservoir tank. It should be between Max and Min lines on reservoir tank.
- If fluid level is extremely low, check brake system for leaks.
- Release parking brake lever and see if brake warning lamp goes off. If not, check brake system for leaks.

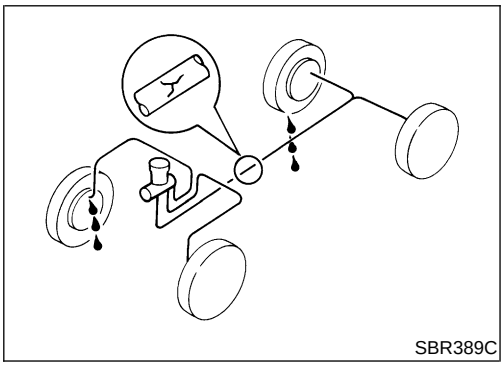
SBR389C

Checking Brake Line

NIBR0007

CAUTION:

If leakage occurs around joints, retighten or, if necessary, replace damaged parts.

1. Check brake lines (tubes and hoses) for cracks, deterioration or other damage. Replace any damaged parts.
2. Check for oil leakage by fully depressing brake pedal while engine is running.

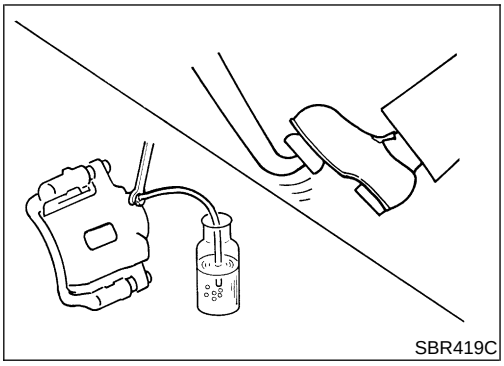
SBR419C

Changing Brake Fluid

NIBR0008

CAUTION:

- **Refill with new brake fluid "DOT 3".**
- **Always keep fluid level higher than minimum line on reservoir tank.**
- **Never reuse drained brake fluid.**
- **Be careful not to splash brake fluid on painted areas; it may cause paint damage. If brake fluid is splashed on painted areas, wash it away with water immediately.**

1. Clean inside of reservoir tank, and refill with new brake fluid.
2. Connect a vinyl tube to each air bleeder valve.
3. Drain brake fluid from each air bleeder valve by depressing brake pedal.
4. Refill until brake fluid comes out of each air bleeder valve. Use same procedure as in bleeding hydraulic system to refill brake fluid. Refer to "Bleeding Brake System", BR-8.

Brake Burnishing Procedure

NIBR0036

Burnish the brake contact surfaces according to the following procedure after refinishing or replacing drums or rotors, after replacing pads or linings, or if a soft pedal occurs at very low mileage.

CAUTION:

Only perform this procedure under safe road and traffic conditions. Use extreme caution.

1. Drive the vehicle on a straight smooth road at 50 km/h (31 MPH).
2. Use medium brake pedal/foot effort to bring the vehicle to a complete stop from 50 km/h (31 MPH). Adjust brake pedal/foot

pressure such that vehicle stopping time equals 3 to 5 seconds.

3. To cool the brake system, drive the vehicle at 50 km/h (31 MPH) for 1 minute without stopping.
4. Repeat steps 1 to 3, 10 times or more to complete the burnishing procedure.

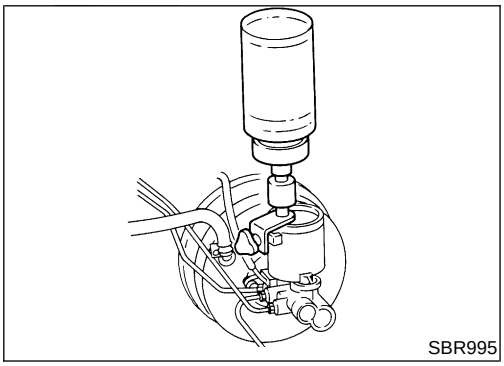
SBR995

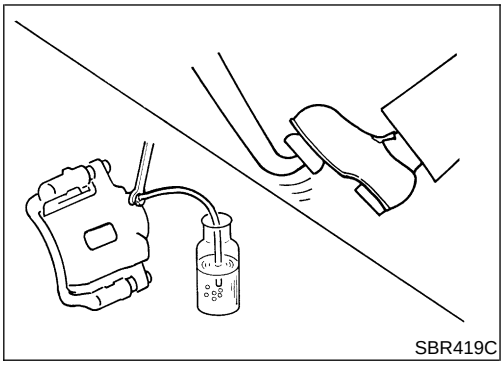
SBR419C

Bleeding Brake System

NIBR0009

CAUTION:

- **Carefully monitor brake fluid level at master cylinder during bleeding operation.**
- **Fill reservoir with new brake fluid "DOT 3". Make sure it is full at all times while bleeding air out of system.**
- **Place a container under master cylinder to avoid spillage of brake fluid.**
- **For models with ABS, turn ignition switch OFF and disconnect ABS actuator and electric unit connectors or battery ground cable.**
- Bleed air in the following order.
  Right rear brake → Left front brake → Left rear brake → Right front brake

1. Connect a transparent vinyl tube to air bleeder valve.
2. Fully depress brake pedal several times.
3. With brake pedal depressed, open air bleeder valve to release air.
4. Close air bleeder valve.
5. Release brake pedal slowly.
6. Repeat steps 2. through 5. until clear brake fluid comes out of air bleeder valve.
7. Tighten air bleeder valve.

   Torque air bleeder valve:

   Front and rear disc brake

   : 7 - 9 N·m (0.7 - 0.9 kg-m, 61 - 78 in-lb)

   Rear disc brake

   : 6.9 - 8.8 N·m (0.71 - 0.89 kg-m, 61 - 77 in-lb)

Hydraulic Circuit

NIBR0010

Without anti-lock brake system
(Models with dual proportioning valve built into master cylinder)
(built-in type)

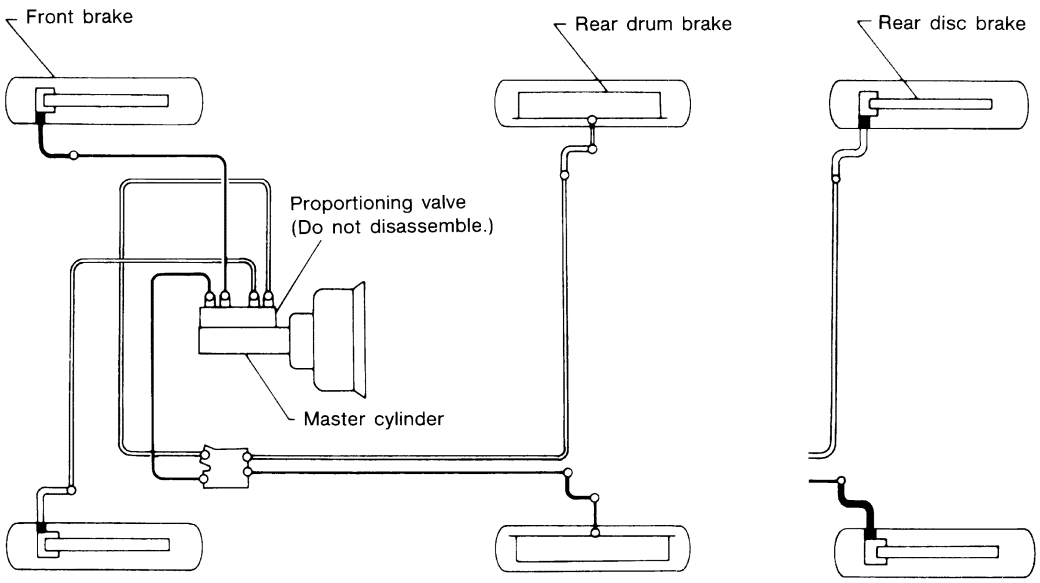

With anti-lock brake system

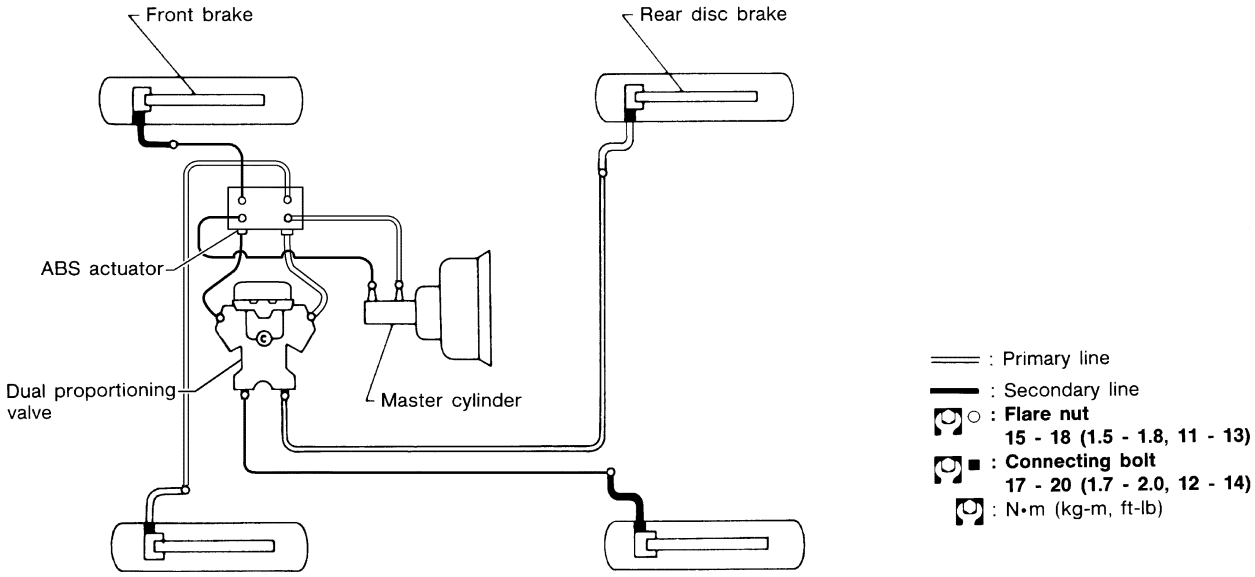

WBR074

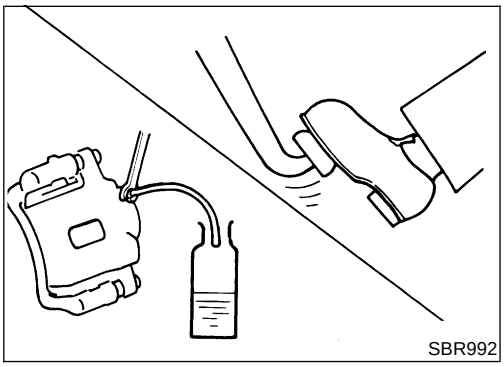

SBR992

Removal

NIBR0011

CAUTION:

- **Be careful not to splash brake fluid on painted areas; it may cause paint damage. If brake fluid is splashed on painted areas, wash it away with water immediately.**
- **All hoses must be free from excessive bending, twisting and pulling.**

1. Connect vinyl tube to air bleeder valve.
2. Drain brake fluid from each air bleeder valve by depressing brake pedal.

3. Remove flare nut connecting brake tube and hose, then withdraw lock spring.
4. Cover openings to prevent entrance of dirt whenever disconnecting brake line.

Inspection

NIBR0012

Check brake lines (tubes and hoses) for cracks, deterioration or other damage. Replace any damaged parts.

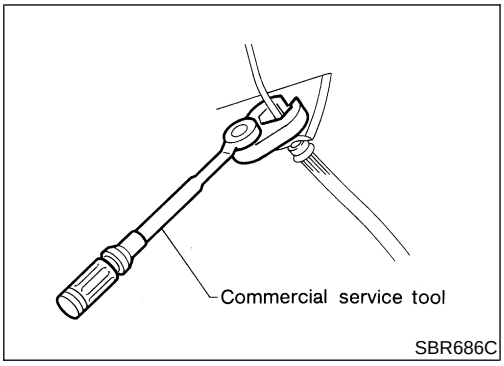

Installation

NIBR0013

CAUTION:

- **Refill with new brake fluid "DOT 3".**
- **Never reuse drained brake fluid.**

1. Tighten all flare nuts and connecting bolts.

   Specification:

   Flare nut

   : 15 - 18 N·m (1.5 - 1.8 kg-m, 11 - 13 ft-lb)

   Connecting bolt

   : 17 - 20 N·m (1.7 - 2.0 kg-m, 12 - 14 ft-lb)
2. Refill until new brake fluid comes out of each air bleeder valve.
3. Bleed air. Refer to "Bleeding Brake System", BR-8.

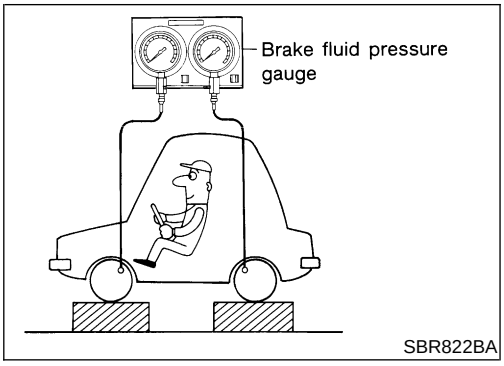

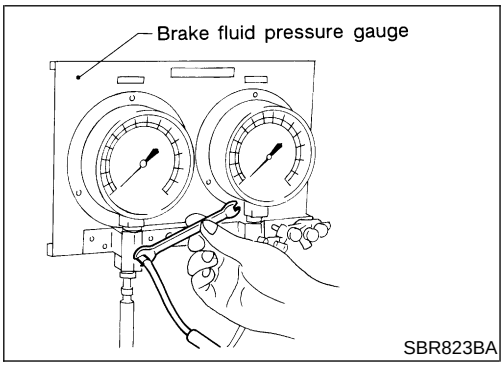

Inspection

NIBR0014

CAUTION:

- **Carefully monitor brake fluid level at master cylinder.**
- **Use new brake fluid "DOT 3".**
- **Be careful not to splash brake fluid on painted areas; it may cause paint damage. If brake fluid is splashed on paint areas, wash it away with water immediately.**

1. Connect Tool to air bleeders of front and rear brakes on either LH and RH side.
2. Bleed air from the Tool.
3. Check fluid pressure by depressing brake pedal.

Unit: kPa (kg/cm^2, psi)

Applied model	All 1.8L	2.0L non-ABS	2.0L with ABS
Applied pressure (Front brake)	7,355 (75, 1,067)	6,374 (65, 924)	6,374 (65, 924)
Output pressure (Rear brake)	5,099 - 5,492 (52 - 56, 740 - 796)	3,775 - 4,168 (38 - 42, 548 - 604)	4,119 - 4,511 (42 - 46, 597 - 654)

If output pressure is out of specification, replace dual proportioning valve.

4. Bleed air after disconnecting the Tool. Refer to "Bleeding Brake System", BR-8.

Removal and Installation

NIBR0015

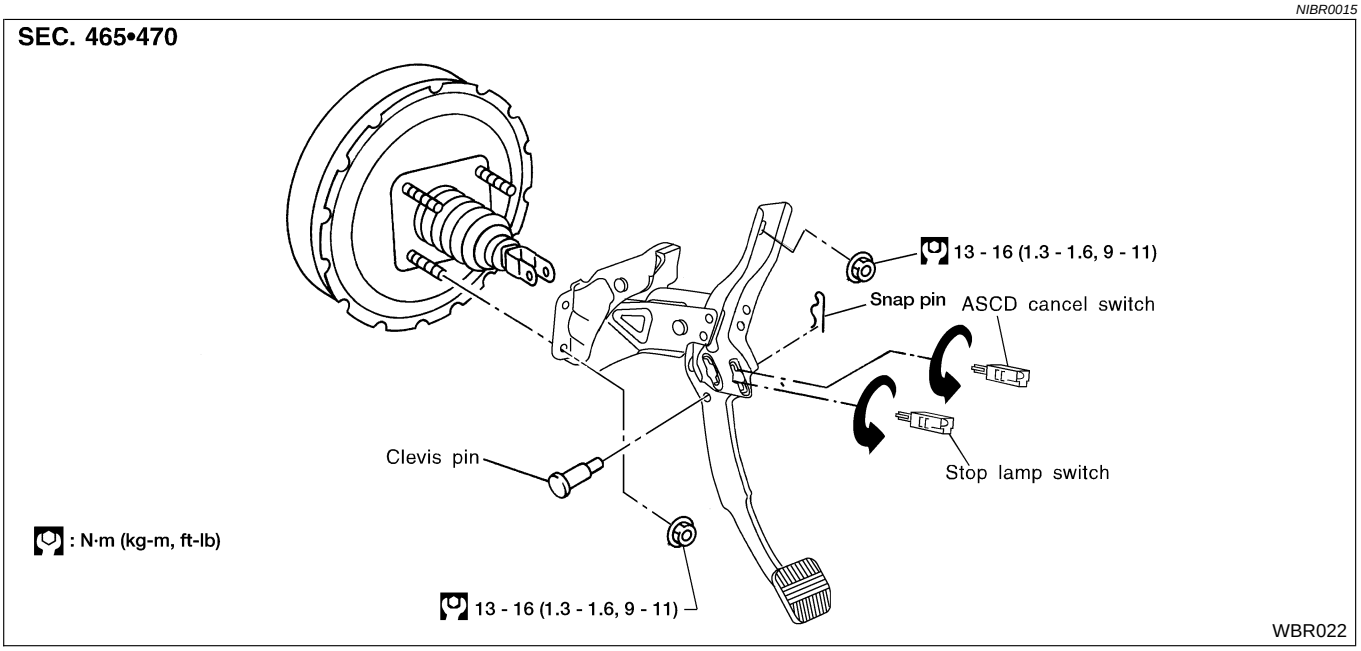

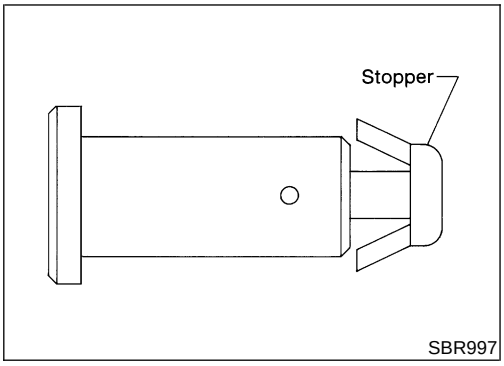

Inspection

NIBR0016

Check brake pedal for following items.

- Brake pedal bend
- Clevis pin deformation
- Crack of any welded portion
- Crack or deformation of clevis pin stopper

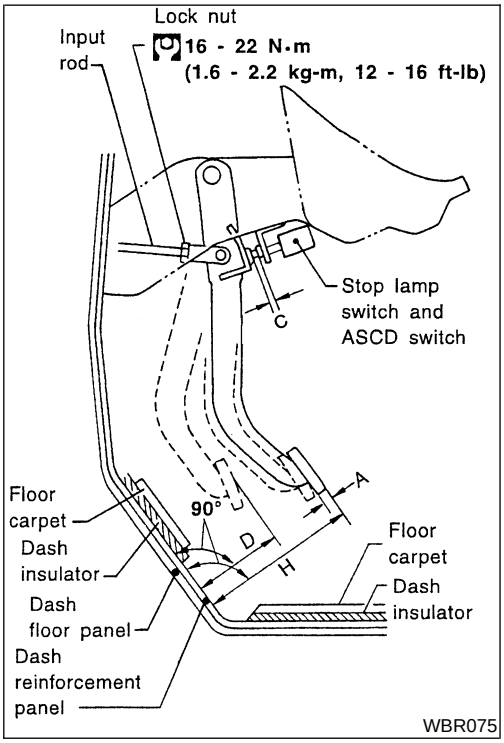

Adjustment

NIBR0017

BRAKE PEDAL HEIGHT

NIBR0017S01

Check brake pedal free height from metal panel. Adjust if necessary.

H: Free height
Refer to “Brake Pedal”, BR-82.
D: Depressed height
90 mm (3.54 in)
Under force of 490 N (50 kg, 110 lb) with engine running
A: Pedal free play at pedal pad
1.0 - 3.0 mm (0.039 - 0.118 in)

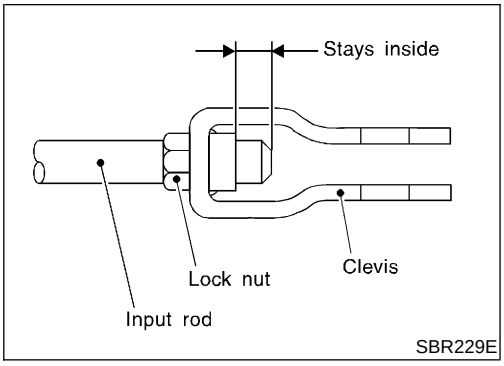

1. Loosen lock nut and adjust pedal free height by turning brake booster input rod. Then tighten lock nut.
2. Check pedal free play.
   Make sure that stop lamps go off when pedal is released.
3. Check brake pedal's depressed height while engine is running. If lower than specification, check brake system for leaks, accumulation of air or any damage to components (master cylinder, wheel cylinder, etc.); then make necessary repairs.

STOP LAMP SWITCH AND ASCD CANCEL SWITCH CLEARANCE

NIBR0017S02

1. Twist and pull to remove switch.
2. Pull up on brake pedal pad and hold.
3. Insert switch into retainer until switch plunger is completely depressed.
4. Turn the switch until it locks into place in the brake pedal bracket.
5. Release the brake pedal pad.

NOTE:
When turning the switch to lock into place, the switch backs off the stopper to the correct clearance automatically.

Removal

NIBR0095

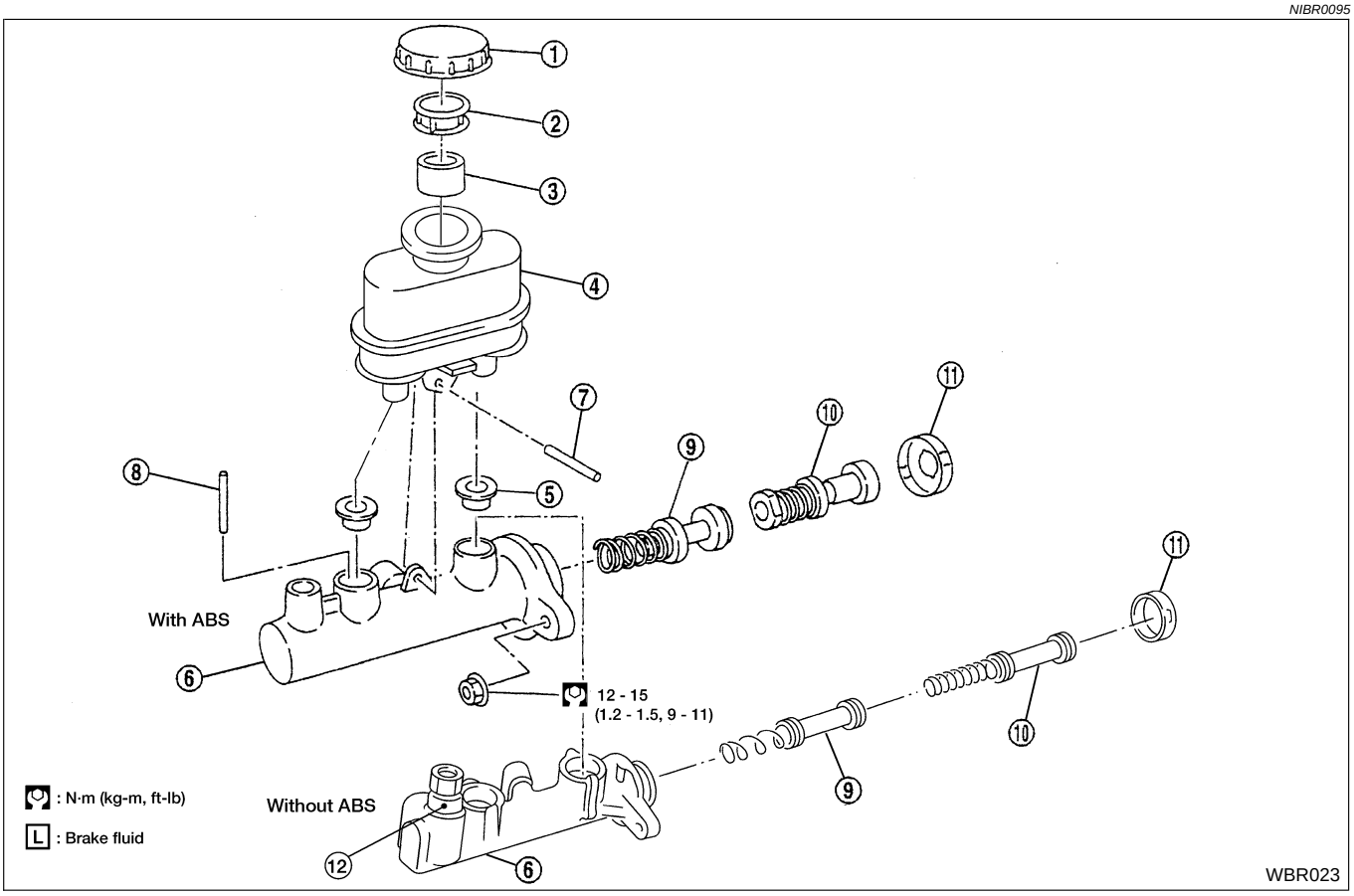

1. Reservoir cap
2. Oil filter
3. Float
4. Reservoir tank
5. Seal
6. Cylinder body
7. Spring pin (with ABS)
8. Piston stopper pin (with ABS)
9. Secondary piston assembly
10. Primary piston assembly
11. Stopper cap
12. Proportioning valve (without ABS)

CAUTION:
Be careful not to splash brake fluid on painted areas; it may cause paint damage. If brake fluid is splashed on painted areas, wash it away with water immediately.

1. Connect a vinyl tube to air bleeder valve.
2. Drain brake fluid from each air bleeder valve, depressing brake pedal to empty fluid from master cylinder.
3. Remove brake lines' flare nuts.
4. Remove master cylinder mounting nuts.

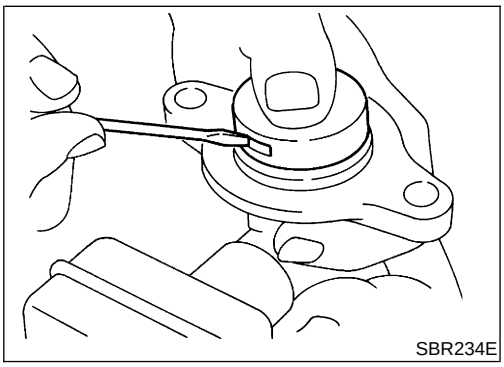

Disassembly

NIBR0096

1. Bend claws of stopper cap outward and remove stopper cap.

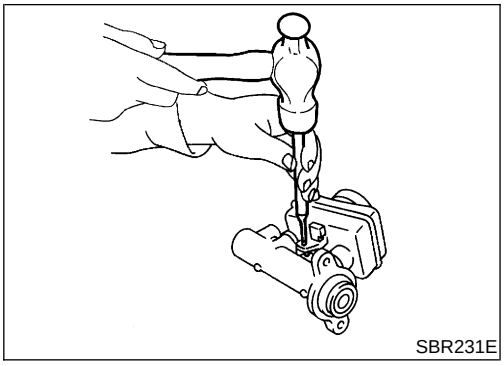
SBR231E

2. Drive out spring pin from cylinder body (with ABS).
3. Draw out reservoir tank and seals.

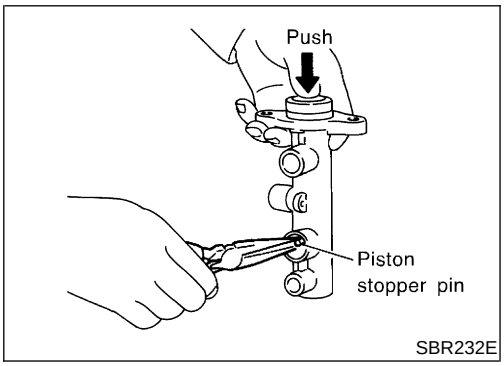

SBR232E

4. Remove piston stopper pin while piston is pushed into cylinder (with ABS).
5. Remove piston assemblies.
   If it is difficult to remove secondary piston assembly, gradually apply compressed air through fluid outlet.

Inspection

NIBR0097

Check for the following items.
Replace any part if damaged.
Master cylinder:

- Pin holes or scratches on inner wall.

Piston:

- Deformation of or scratches on piston cups.

Assembly

NIBR0098

1. Insert secondary piston assembly. Then insert primary piston assembly.

- **Pay attention to alignment of secondary piston slit with valve stopper mounting hole of cylinder body (with ABS).**

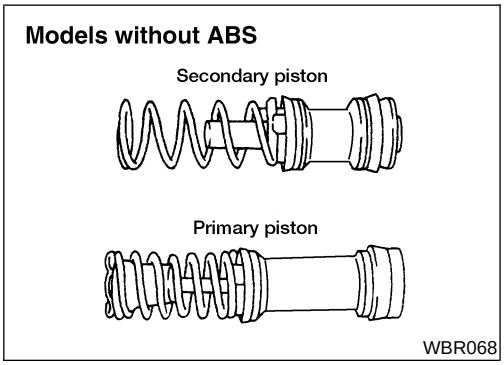

WBR068

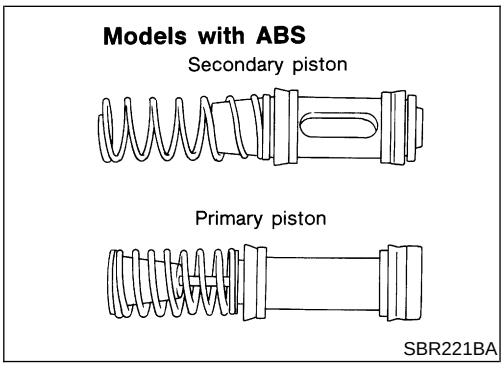

SBR221BA

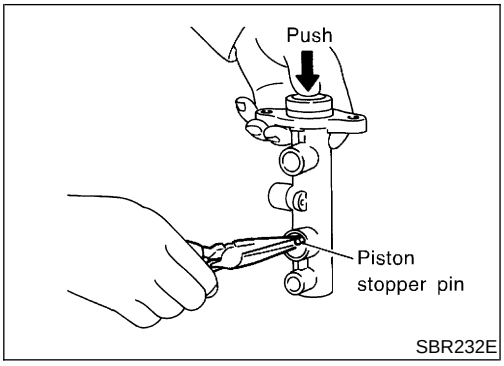

SBR232E

2. Install piston stopper pin while piston is pushed into cylinder (with ABS).
3. Push reservoir tank seals and reservoir tank into cylinder body.
4. Install spring pin (with ABS).

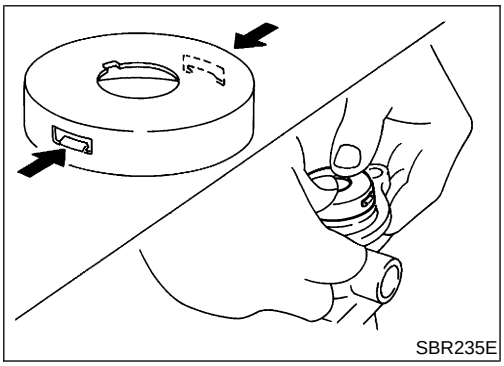
SBR235E

5. Install stopper cap.

Before installing stopper cap, ensure that claws are bent inward.

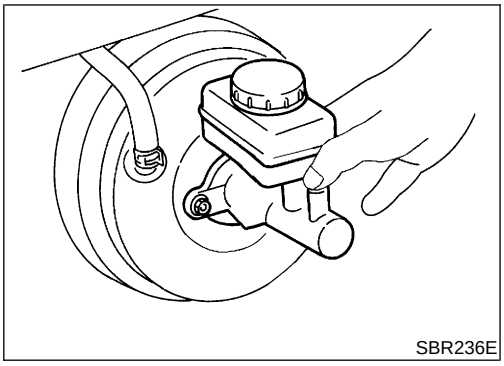
SBR236E

Installation

NIBR0099

CAUTION:

- **Refill with new brake fluid "DOT 3".**
- **Never reuse drained brake fluid.**

1. Place master cylinder onto brake booster and secure mounting nuts lightly.
2. Torque mounting nuts.

   : 12 - 15 N·m (1.2 - 1.5 kg-m, 9 - 11 ft-lb)
3. Fill reservoir tank with new brake fluid "DOT 3".
4. Plug all ports on master cylinder with fingers to prevent air suction while releasing brake pedal.
5. Have driver depress brake pedal slowly several times until no air comes out of master cylinder.
6. Fit brake lines to master cylinder.
7. Tighten flare nuts.

   : 15 - 18 N·m (1.5 - 1.8 kg-m, 11 - 13 ft-lb)
8. Bleed air from brake system. Refer to "Bleeding Brake System", BR-8.

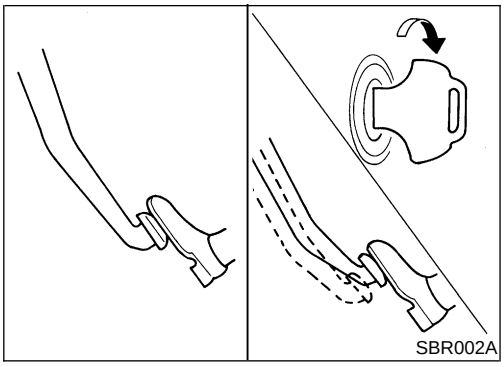

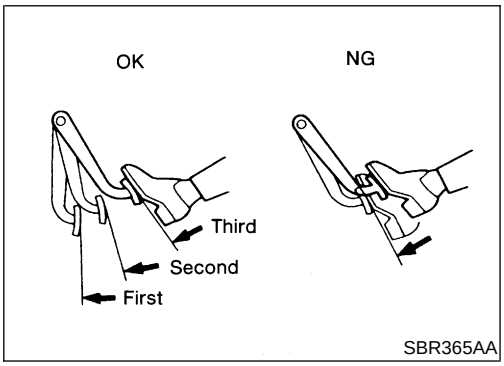

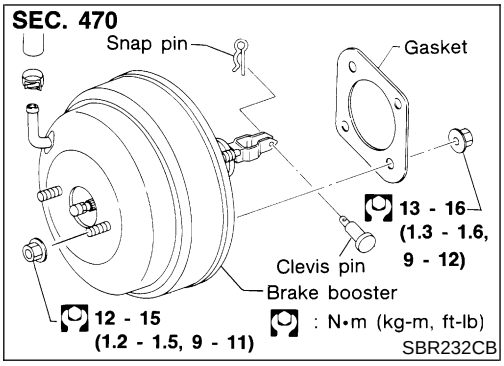

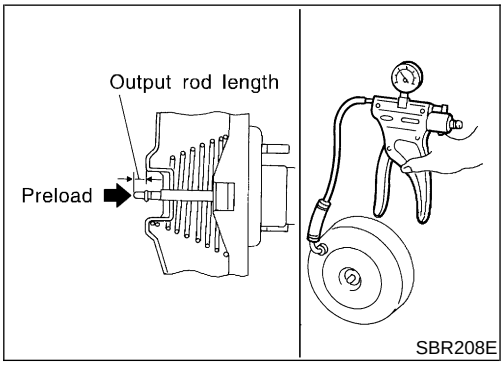

On-vehicle Service

NIBR0023

OPERATING CHECK

NIBR0023S01

1. Stop engine and depress brake pedal several times. Check that pedal stroke does not change.
2. Depress brake pedal, then start engine. If pedal goes down slightly, operation is normal.

AIRTIGHT CHECK

NIBR0023S02

1. Start engine, and stop it after one or two minutes. Depress brake pedal several times slowly. The pedal should go further down the first time, and then it should gradually rise thereafter.
2. Depress brake pedal while engine is running, and stop engine with pedal depressed. The pedal stroke should not change after holding pedal down for **30 seconds.**

Removal

NIBR0024

CAUTION:

- **Be careful not to splash brake fluid on painted areas; it may cause paint damage. If brake fluid is splashed on painted areas, wash it away with water immediately.**
- **Be careful not to deform or bend brake lines, during removal of booster.**

Inspection

NIBR0025

OUTPUT ROD LENGTH CHECK

NIBR0025S01

1. Apply vacuum of −66.7 kPa (−500 mmHg, −19.69 inHg) to brake booster with a handy vacuum pump.
2. Add preload of 19.6 N (2 kg, 4.4 lb) to output rod.
3. Check output rod length.

   Specified length:

   10.275 - 10.525 mm (0.4045 - 0.4144 in)

Installation

NIBR0026

CAUTION:

- **Be careful not to deform or bend brake lines, during installation of booster.**
- **Replace clevis pin if damaged.**
- **Refill with new brake fluid “DOT 3”.**
- **Never reuse drained brake fluid.**
- **Take care not to damage brake booster mounting bolt thread when installing. Due to the acute angle of installation, the threads can be damaged with the dash panel.**

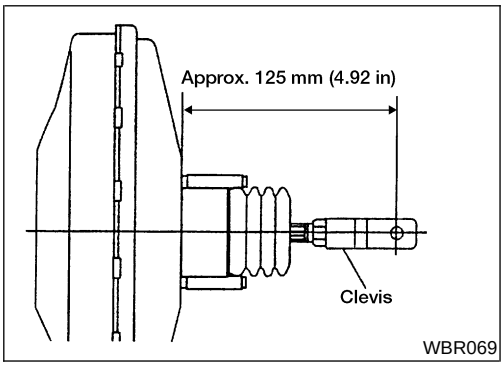

1. Before fitting booster, temporarily adjust clevis to dimension shown.
2. Fit booster, then secure mounting nuts (brake pedal bracket to master cylinder) lightly.
3. Connect brake pedal and booster input rod with clevis pin.
4. Secure mounting nuts.

   Specification:

   : 13 - 16 N·m (1.3 - 1.6 kg-m, 9 - 12 ft-lb)
5. Install master cylinder. Refer to “Installation” in “MASTER CYLINDER”, BR-16.
6. Adjust brake pedal height. Refer to “Adjustment”, BR-12.
7. Bleed air. Refer to “Bleeding Brake System”, BR-8.

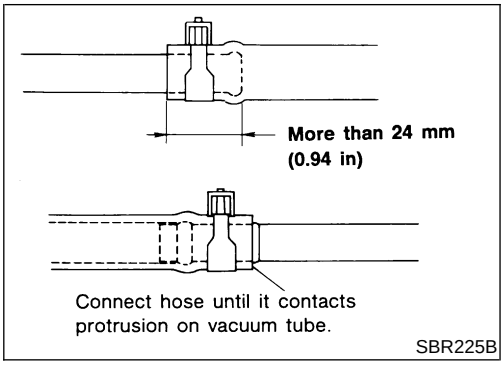

Removal and Installation

NIBR0027

CAUTION:

When installing vacuum hoses, pay attention to the following points.

- **Do not apply any oil or lubricants to vacuum hose with check valve.**
- **Insert vacuum tube into vacuum hose as shown.**
- **Install vacuum hose with internal check valve, paying attention to its direction.**

Inspection

NIBR0028

HOSES AND CONNECTORS

NIBR0028S01

Check vacuum lines and connections for airtightness, improper attachment chafing and deterioration.

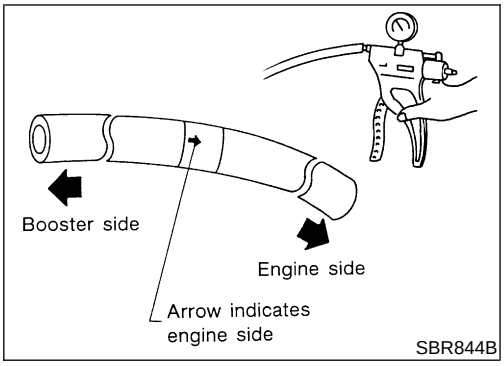

CHECK VALVE

NIBR0028S02

Check vacuum with a vacuum pump.

Connect to booster side	Vacuum should exist.
Connect to engine side	Vacuum should not exist.

Component

NIBR0030

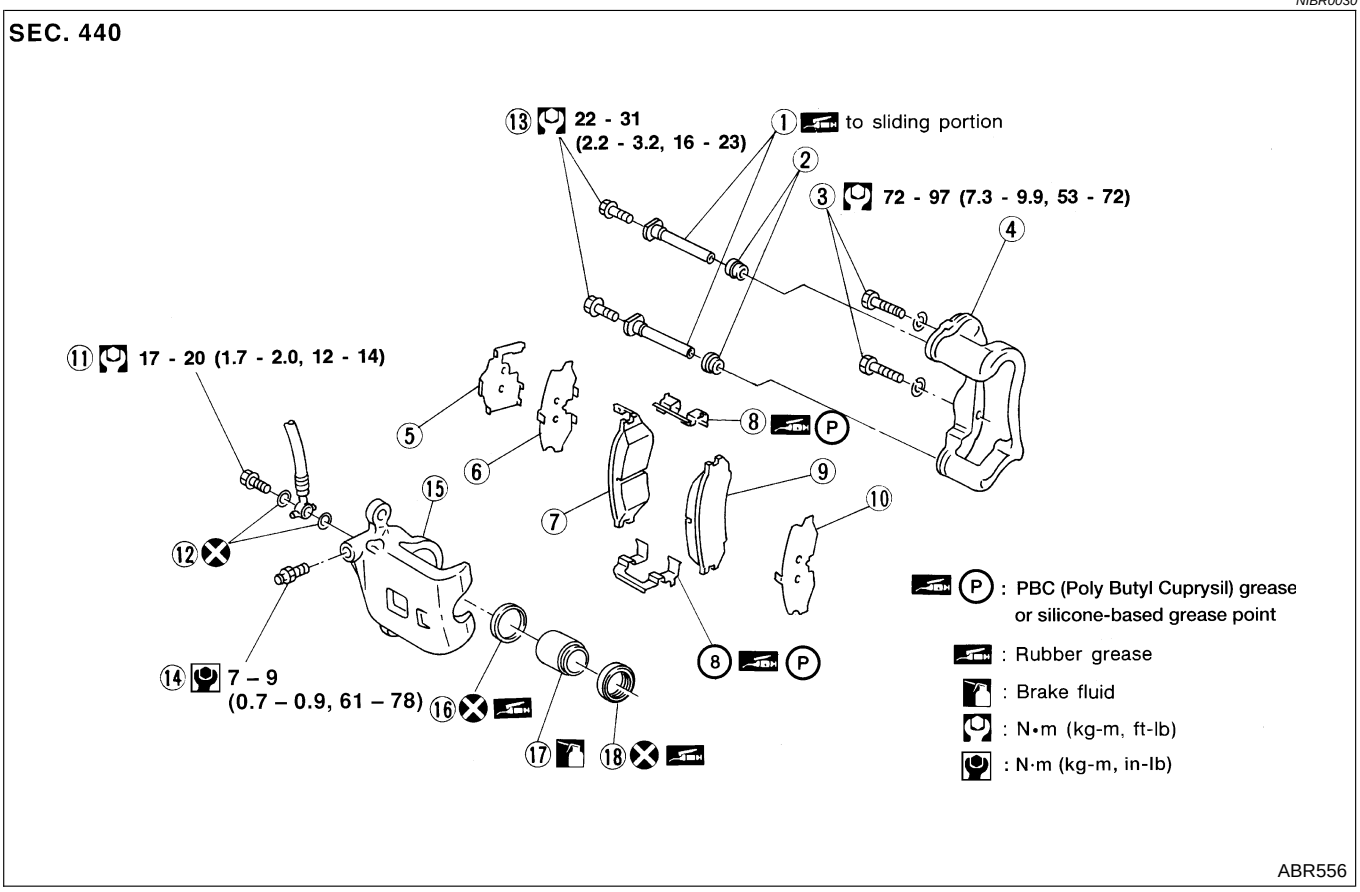

1. Main pin
2. Pin boot
3. Torque member fixing bolt
4. Torque member
5. Shim cover
6. Inner shim
7. Inner pad
8. Pad retainer
9. Outer pad
10. Outer shim
11. Connecting bolt
12. Copper washer
13. Main pin bolt
14. Air bleeder valve
15. Cylinder body
16. Piston seal
17. Piston
18. Piston boot

Pad Replacement

NIBR0029

WARNING:

Clean brake pads with a vacuum dust collector to minimize the hazard of airborne particles or other materials.

CAUTION:

- **When cylinder body is open, do not depress brake pedal because piston will pop out.**
- **Be careful not to damage piston boot or get oil on rotor. Always replace shims when replacing pads.**
- **If shims are rusted or show peeling of the rubber coat, replace them with new shims.**

- **It is not necessary to remove connecting bolt except for disassembly or replacement of caliper assembly. In this case, suspend cylinder body with wire so as not to stretch brake hose.**
- **Burnish the brake contact surfaces after refinishing or replacing drums or rotors, after replacing pads or linings, or if a soft pedal occurs at very low mileage.**
  Refer to "Brake Burnishing Procedure", BR-7.

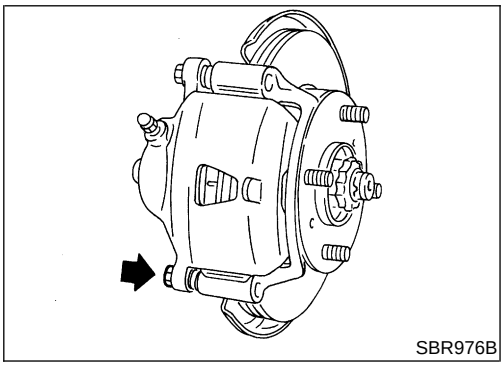
SBR976B

1. Remove master cylinder reservoir cap.
2. Remove pin bolt.
3. Open cylinder body upward. Then remove pad with retainers, inner and outer shims.

   Standard pad thickness (CL25VA, CL25VB):
   11 mm (0.43 in)
   Pad wear limit (CL25VA, CL25VB):
   2.0 mm (0.079 in)

   Carefully monitor brake fluid level because brake fluid will return to reservoir when pushing back piston.

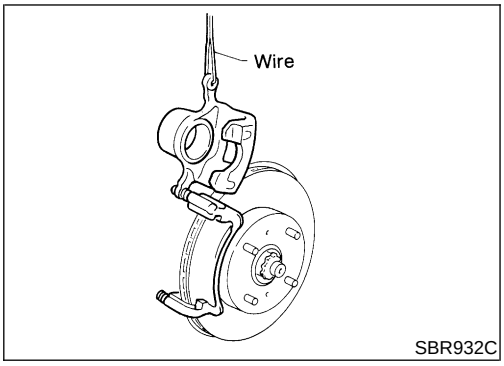

SBR932C

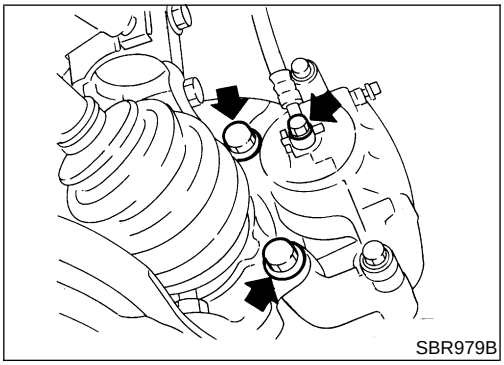
SBR979B

Removal

NIBR0031

WARNING:
Clean brake pads with a vacuum dust collector to minimize the hazard of airborne particles or other materials.

Remove torque member fixing bolts and brake hose connecting bolt.
It is not necessary to remove brake hose connecting bolt except for disassembly or replacement of caliper assembly. In this case, suspend caliper assembly with wire so as not to stretch brake hose.

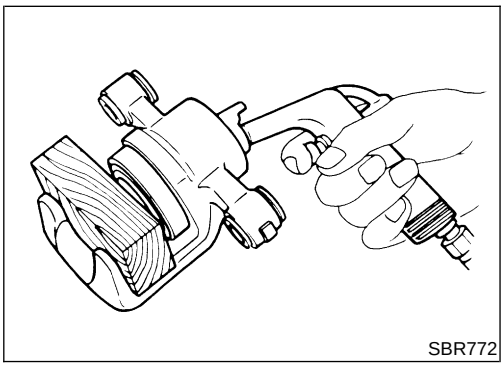
SBR772

Disassembly

NIBR0032

WARNING:
Do not place your fingers in front of piston.

CAUTION:
Do not scratch or score cylinder wall.

1. Push out piston with piston boot with compressed air.
2. Remove piston seal with a suitable tool.

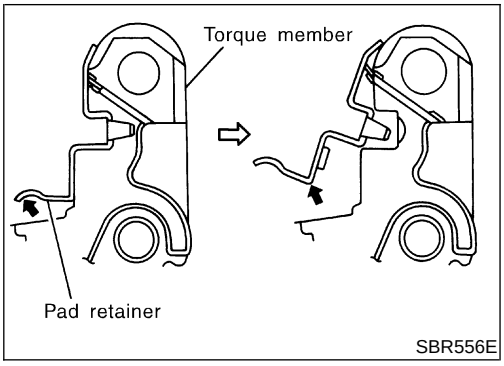

CAUTION:
When removing the pad retainer from the torque member, lift it up and out in the direction of the arrows in the figure.

Inspection

NIBR0033

CALIPER

NIBR0033S01

Cylinder Body

NIBR0033S0101

- Check inside surface of cylinder for score, rust, wear, damage or presence of foreign materials. If any of the above conditions are observed, replace cylinder body.
- Minor damage from rust or foreign materials may be eliminated by polishing surface with a fine emery paper. Replace cylinder body if necessary.

CAUTION:
Use brake fluid to clean. Never use mineral oil.

Piston

NIBR0033S0102

CAUTION:
Piston sliding surface is plated. Do not polish with emery paper even if rust or foreign materials are stuck to sliding surface.

Check piston for score, rust, wear, damage or presence of foreign materials. Replace if any of the above conditions are observed.

Slide Pin, Pin Bolt and Pin Boot

NIBR0033S0103

Check for wear, cracks or other damage. Replace if any of the above conditions are observed.

ROTOR

NIBR0033S02

Rubbing Surface

NIBR0033S0201

Check rotor for roughness, cracks or chips.

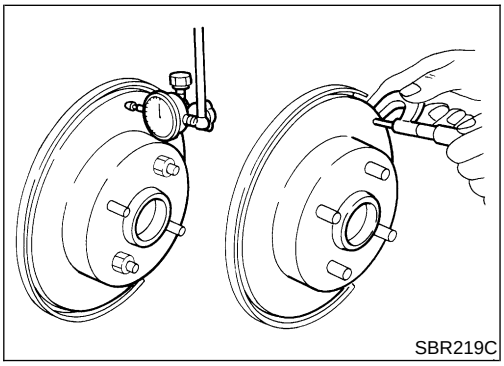

Runout

NIBR0033S0202

1. Secure rotor to wheel hub with at least two nuts (M12 x 1.25).
2. Check runout using a dial indicator.
   Make sure that wheel bearing axial end play is within the specifications before measuring. Refer to *AX-4*, "FRONT WHEEL BEARING".
   Maximum runout:
   0.07 mm (0.0028 in)
3. If the runout is out of specification, find minimum runout position as follows:

a. Remove nuts and rotor from wheel hub.

b. Shift the rotor one hole and secure rotor to wheel hub with nuts.
c. Measure runout.
d. Repeat steps a. to c. so that minimum runout position can be found.
4. If the runout is still out of specification, turn rotor with on-car brake lathe ("MAD, DL-8700", "AMMCO 700 and 705" or equivalent).

Thickness

NIBR0033S0203

Thickness variation (At least 8 positions):
Maximum 0.01 mm (0.0004 in)

If thickness variation exceeds the specification, turn rotor with on-car brake lathe.

Rotor repair limit:
20.0 mm (0.787 in)

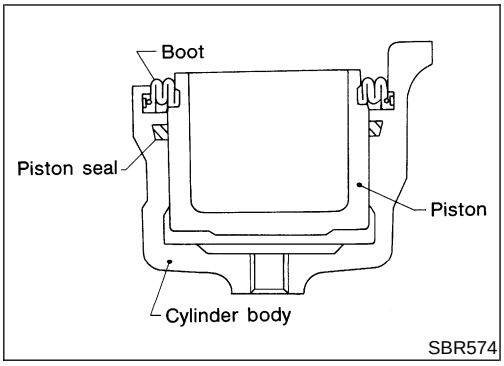

Assembly

NIBR0034

1. Insert piston seal into groove on cylinder body.
2. With piston boot fitted to piston, insert piston boot into groove on cylinder body and install piston.
3. Properly secure piston boot.

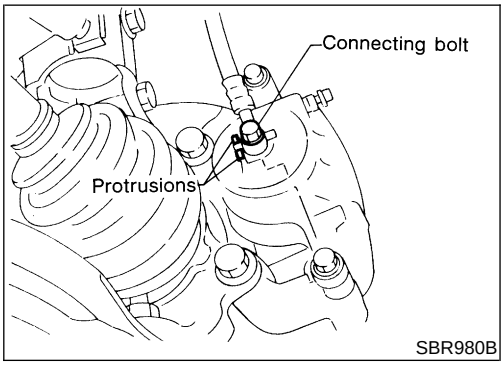

Installation

NIBR0035

CAUTION:

- **Refill with new brake fluid "DOT 3".**
- **Never reuse drained brake fluid.**

1. Install brake hose to caliper securely.
2. Install all parts and secure all bolts.
3. Bleed air. Refer to "Bleeding Brake System", BR-8.

Component

NIBR0038

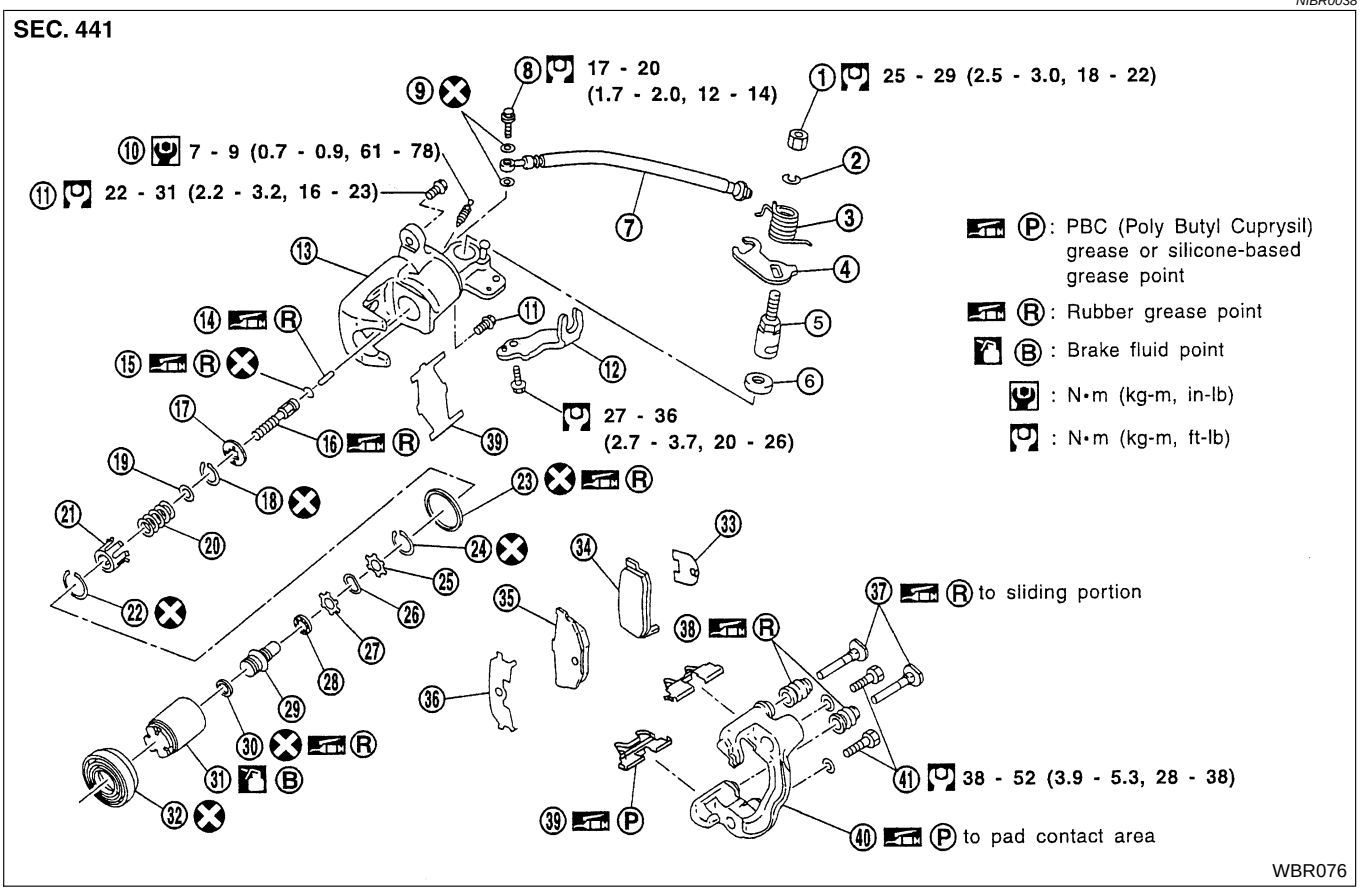

1. Nut
2. Washer
3. Return spring
4. Parking brake lever
5. Cam
6. Cam boot
7. Brake hose
8. Connecting bolt
9. Copper washer
10. Air bleeder valve
11. Pin bolt
12. Cable mounting bracket
13. Cylinder
14. Strut
15. O-ring
16. Push rod
17. Key plate
18. Ring C
19. Seat
20. Spring
21. Spring cover
22. Ring B
23. Piston seal
24. Ring A
25. Spacer
26. Wave washer
27. Spacer
28. Ball bearing
29. Adjust nut
30. Cup
31. Piston
32. Dust seal
33. Inner shim
34. Inner pad
35. Outer pad
36. Outer shim
37. Pin
38. Pin boot
39. Pad retainer
40. Torque member
41. Torque member fixing bolt

Pad Replacement

NIBR0037

WARNING:

Clean brake pads with a vacuum dust collector to minimize the hazard of airborne particles or other materials.

CAUTION:

- **When cylinder body is open, do not depress brake pedal because piston will pop out.**
- **Be careful not to damage piston boot or get oil on rotor. Always replace shims in replacing pads.**
- **If shims are rusted or show peeling of rubber coat, replace them with new shims.**

- **It is not necessary to remove connecting bolt except for disassembly or replacement of caliper assembly. In this case, suspend cylinder body with wire so as not to stretch brake hose.**
- **Burnish the brake contact surfaces after refinishing or replacing drums or rotors, after replacing pads or linings, or if a soft pedal occurs at very low mileage.**
  Refer to "Brake Burnishing Procedure", "ON-VEHICLE SERVICE", BR-7.

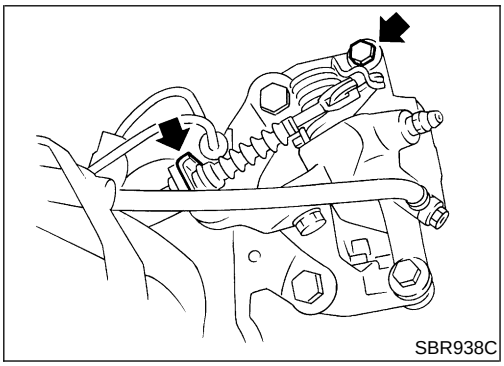
SBR938C

1. Remove master cylinder reservoir cap.
2. Remove brake cable mounting bolt and lock spring.
3. Release parking brake control lever, then disconnect cable from the caliper.
4. Remove upper pin bolt.
5. Open cylinder body downward. Then remove pad retainers, and inner and outer shims.

   Standard pad thickness:
   10 mm (0.39 in)
   Pad wear limit:
   2.0 mm (0.079 in)

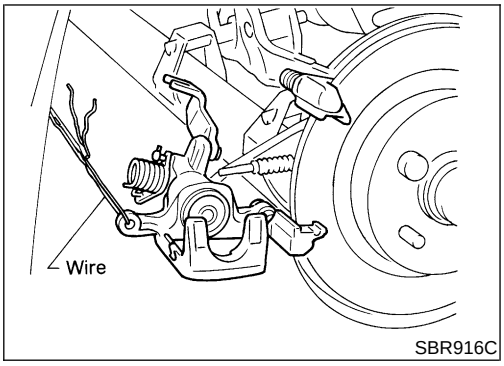

SBR916C

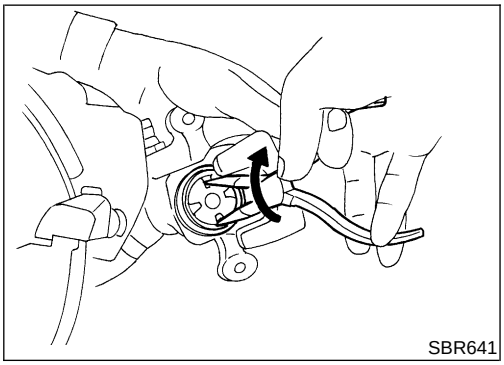
SBR641

6. When installing new pads, push piston into cylinder body by gently turning piston clockwise, as shown.
   Carefully monitor brake fluid level because brake fluid will return to reservoir when pushing back piston.

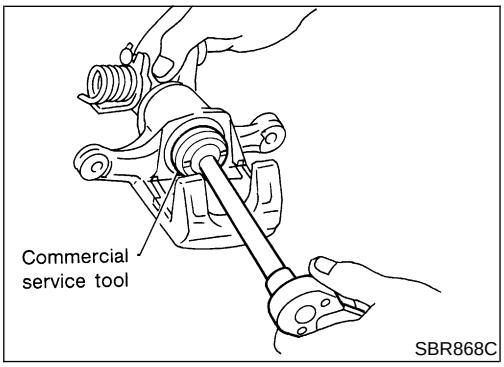

SBR868C

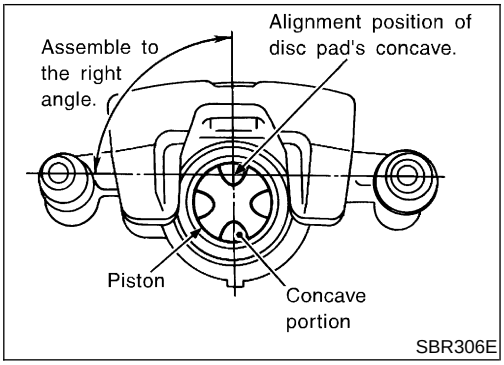

7. Adjust the piston to the right angle as shown in the figure.

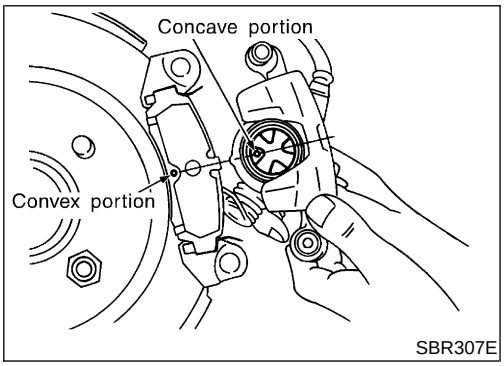

8. As shown in the figure, align the piston's concave to the pad's convex, then install the cylinder body to the torque member.

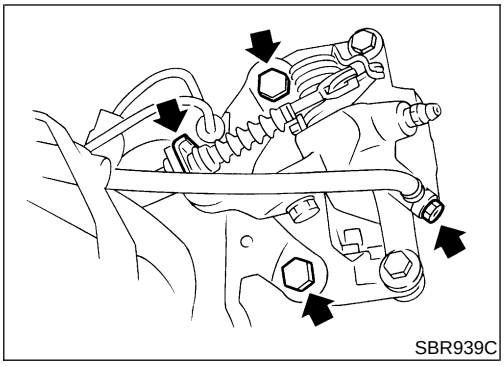

Removal

NIBR0039

WARNING:

Clean brake pads with a vacuum dust collector to minimize the hazard of airborne particles or other materials.

1. Remove brake cable mounting bolt and lock spring.
2. Release parking brake control lever, then disconnect cable from the caliper.
3. Remove torque member fixing bolts and brake hose connecting bolt.

It is not necessary to remove brake hose connecting bolt except for disassembly or replacement of caliper assembly. In this case, suspend caliper assembly with wire so as not to stretch brake hose.

4. Remove caliper assembly.

Disassembly

NIBR0040

1. Remove piston by turning it counterclockwise with suitable commercial service tool or long nose pliers.

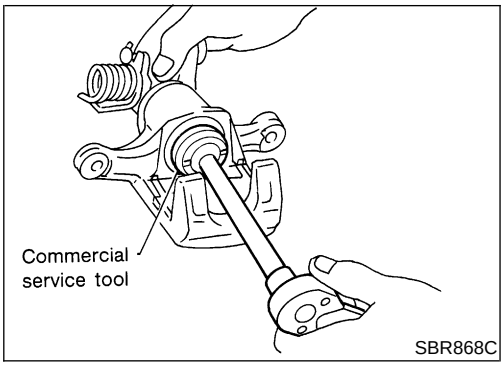

SBR868C

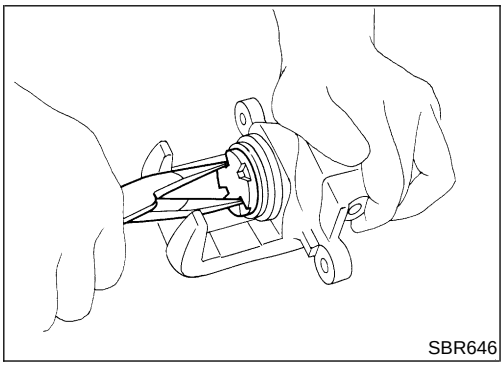
SBR646

2. Pry off ring A from piston with suitable pliers and remove cup, adjuster, bearing, spacers, and washer.

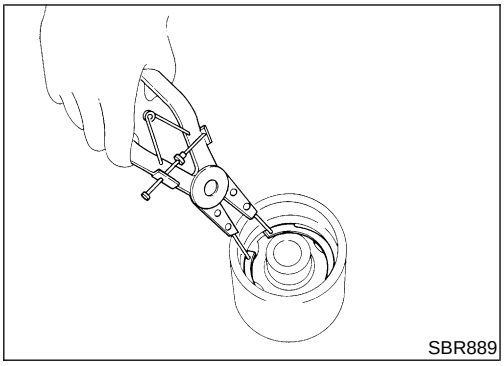
SBR889

3. Disassemble cylinder body.
   a. Pry off ring B with suitable pliers, then remove spring cover, spring and seat.
   b. Pry off ring C, then remove key plate, push rod and rod.

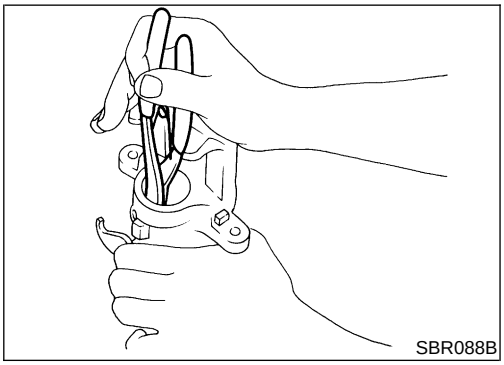
SBR088B

   c. Remove piston seal with a suitable tool.
   Be careful not to damage cylinder body.

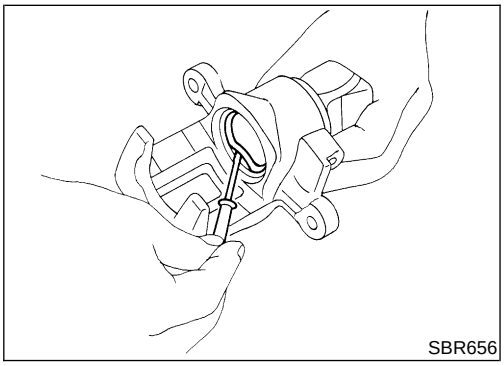
SBR656

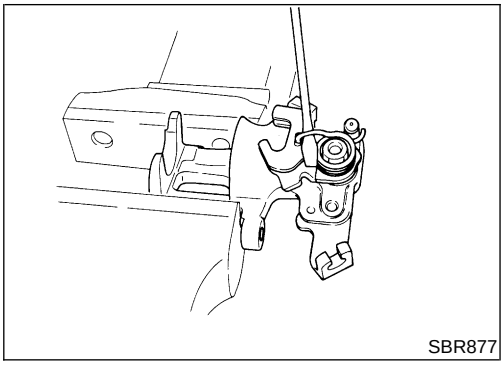
SBR877

4. Remove return spring, toggle lever and cable guide.

Inspection

NIBR0041

CALIPER

NIBR0041S01

CAUTION:

Use brake fluid to clean cylinder. Never use mineral oil.

Cylinder Body

NIBR0041S0101

- Check inside surface of cylinder for score, rust, wear, damage or presence of foreign materials. If any of the above conditions are observed, replace cylinder body.
- Minor damage from rust or foreign materials may be eliminated by polishing surface with a fine emery paper.
  Replace cylinder body if necessary.

Torque Member

NIBR0041S0102

Check for wear, cracks or other damage. Replace if necessary.

Piston

NIBR0041S0103

CAUTION:

Piston sliding surface is plated. Do not polish with emery paper even if rust or foreign matter is stuck to sliding surface.

Check piston for score, rust, wear, damage or presence of foreign materials.
Replace if any of the above conditions are observed.

Pin and Pin Boot

NIBR0041S0104

Check for wear, cracks or other damage.
Replace if any of the above conditions are observed.

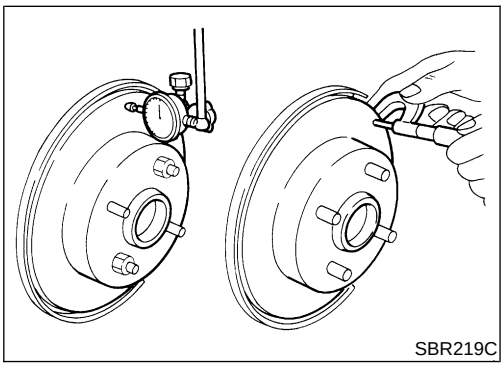
SBR219C

ROTOR

NIBR0041S02

Rubbing Surface

NIBR0041S0201

Check rotor for roughness, cracks or chips.

Runout

NIBR0041S0202

1. Secure rotor to wheel hub with two nuts (M12 x 1.25).
2. Check runout using a dial indicator.

Make sure that axial end play is within the specifications before measuring. Refer to *AX-22*, "REAR WHEEL BEARING".

3. Change relative positions of rotor and wheel hub so that runout is minimized.

Maximum runout:
0.07 mm (0.0028 in)

Thickness

NIBR0041S0203

Rotor repair limit:
Standard thickness
9 mm (0.354 in)
Minimum thickness
8 mm (0.315 in)
Thickness variation (At least 8 portions)
Maximum 0.02 mm (0.0008 in)

Assembly

NIBR0042

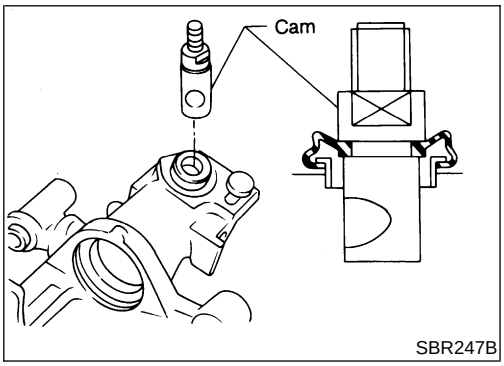

1. Insert cam with depression facing towards open end of cylinder.

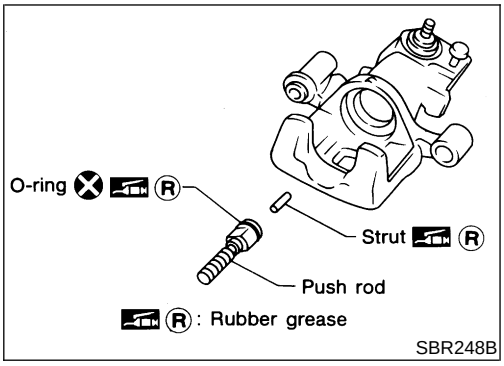

2. Generously apply rubber grease to strut and push rod to make insertion easy.

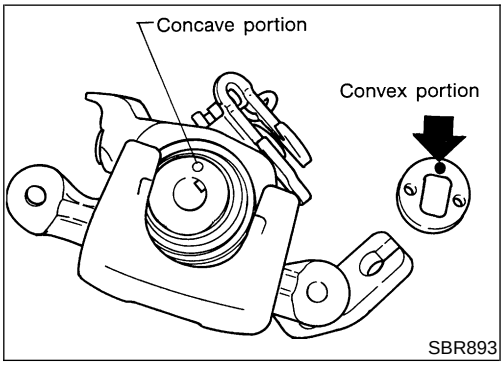

3. Fit push rod into square hole in key plate. Also match convex portion of key plate with concave portion of cylinder.

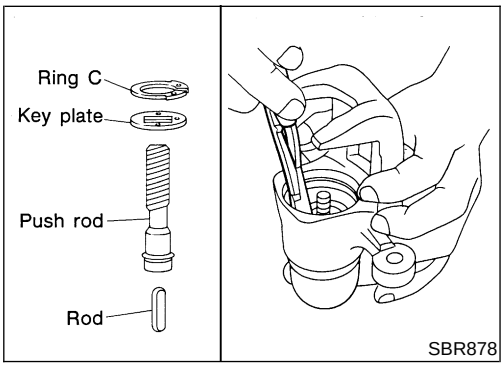

4. Install ring C with a suitable tool.

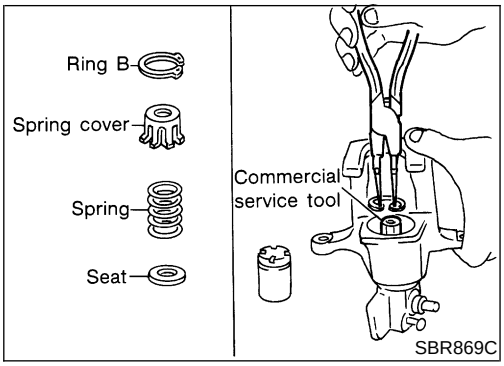

5. Install seat, spring, spring cover and ring B with suitable press and drift.

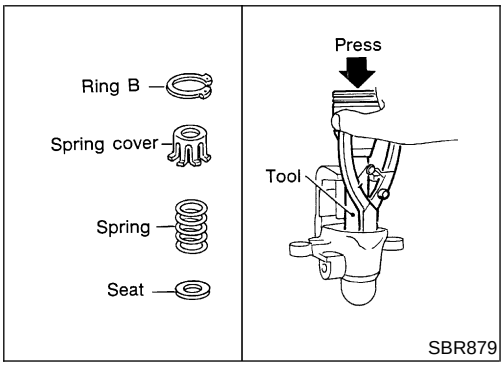

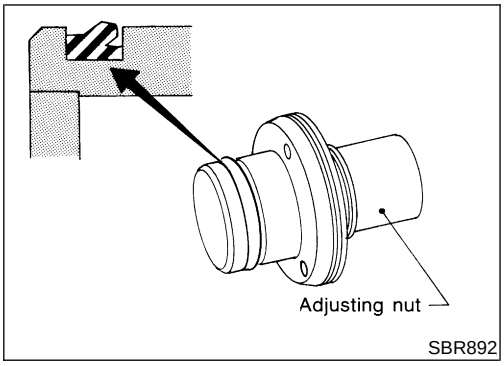

6. Install cup in the specified direction.

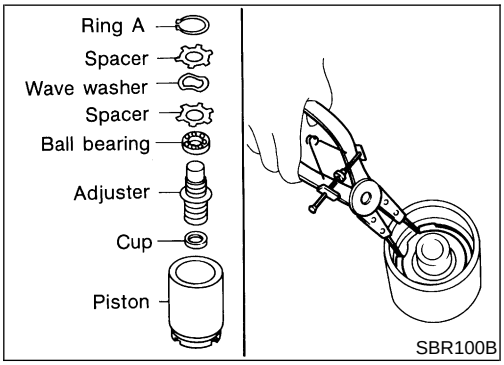

7. Install cup, adjuster, bearing, spacers, washer and ring A with a suitable tool.

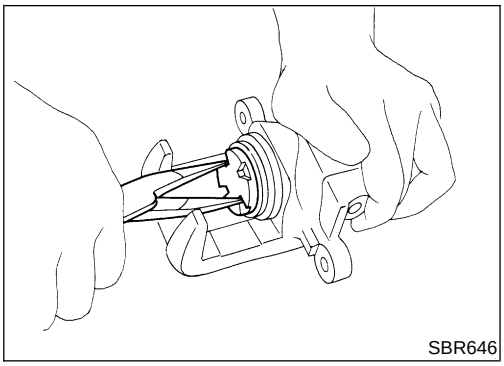
SBR646

8. Insert piston seal into groove on cylinder body.
9. With piston boot fitted to piston, insert piston boot into groove on cylinder body and fit piston by turning it clockwise with long nose pliers, or suitable tool.

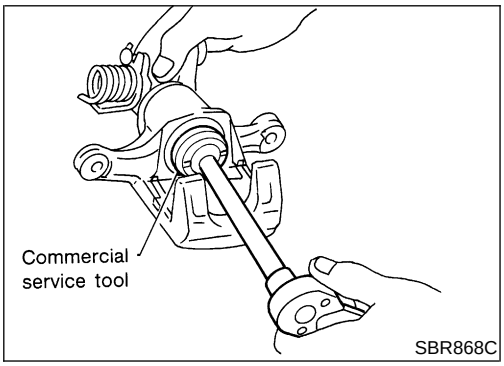

SBR868C

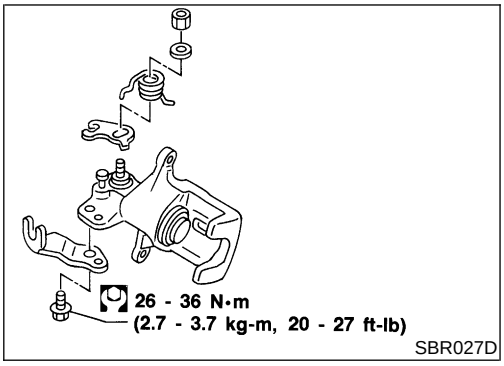

SBR027D

10. Fit toggle lever, return spring and cable guide.

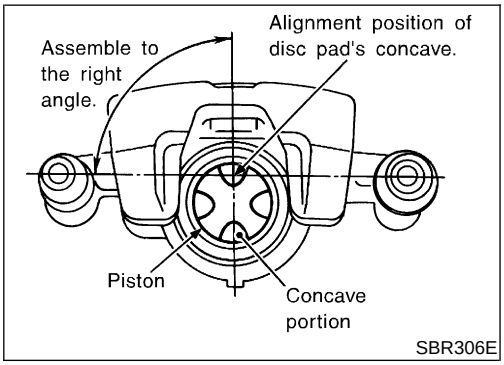

SBR306E

11. Adjust the piston to the right angle as shown in the figure.

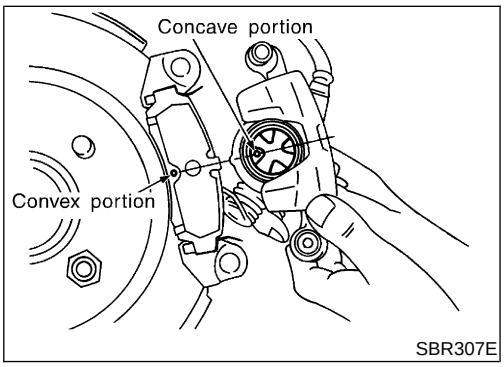

SBR307E

Installation

NIBR0043

CAUTION:

- **Refill with new brake fluid "DOT 3".**
- **Never reuse drained brake fluid.**

1. Install caliper assembly.
   - As shown in the figure, align the piston's concave to the pad's convex, then install the cylinder body to the torque member.
2. Install brake hose to caliper securely.
3. Install all parts and secure all bolts.
4. Bleed air. Refer to "Bleeding Brake System", BR-8.

Components

NIBR0100

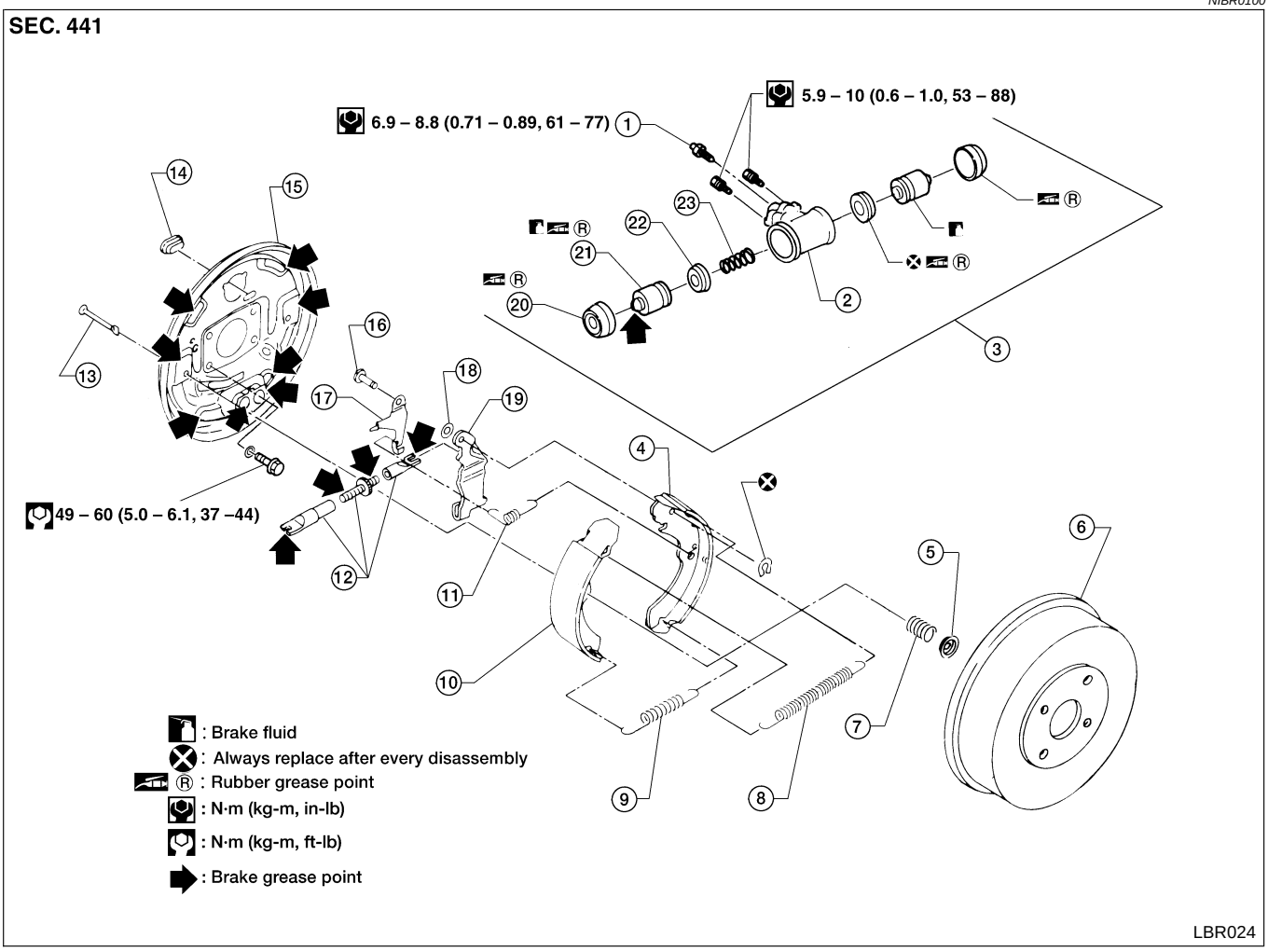

1. Air bleeder valve
2. Cylinder body
3. Wheel cylinder
4. Shoe
5. Retainer ring
6. Brake drum
7. Shoe hold-down spring
8. Return spring
9. Return spring
10. Shoe
11. Adjuster spring
12. Adjuster
13. Shoe hold-down pin
14. Adjuster plug
15. Back plate
16. Retainer
17. Adjusting lever
18. Washer
19. Toggle lever
20. Dust cover
21. Piston
22. Piston cap
23. Spring

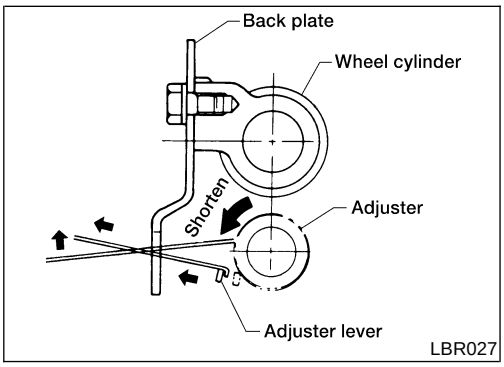

Removal

NIBR0101

WARNING:

Clean brake lining with a vacuum dust collector to minimize the hazard of airborne materials or other materials.

CAUTION:

Make sure parking brake lever is completely released.

1. Release parking brake lever fully, then remove drum.
   If drum is hard to remove, the following procedures should be carried out.

a. Remove adjuster plug. Shorten adjuster as shown to make clearance between brake shoe and drum.

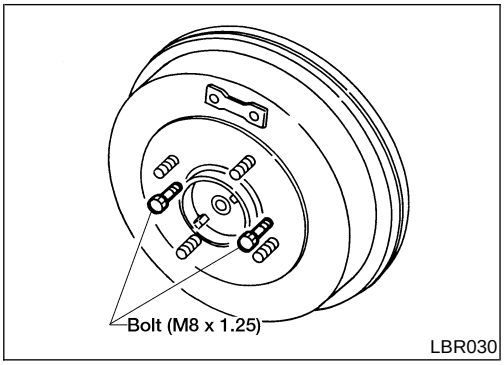

LBR030

b. Install two bolts as shown. Tighten the two bolts gradually.

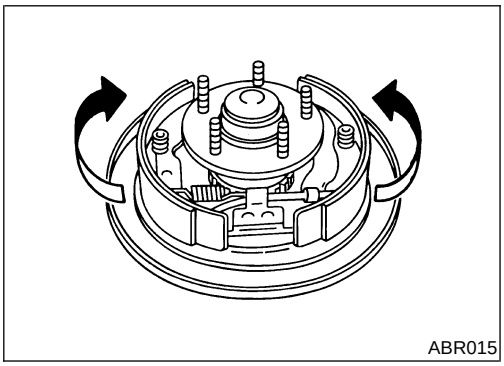
ABR015

2. After removing retainer, remove spring by rotating shoes.

Be careful not to damage parking brake cable when separating it.

3. Remove adjuster.
4. Disconnect parking brake cable from toggle lever.

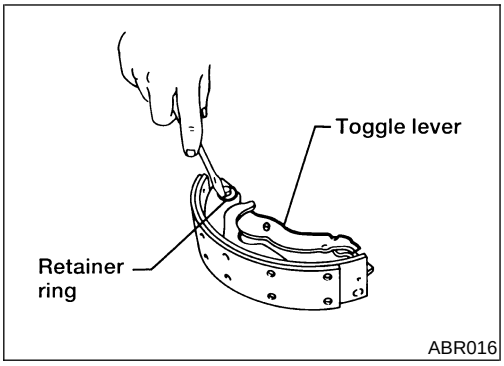

ABR016

5. Remove retainer ring with a suitable tool. Then separate toggle lever and brake shoe.

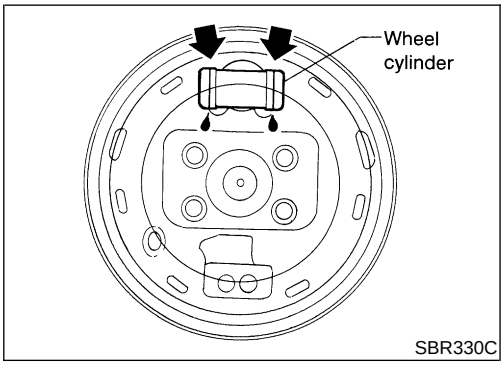

SBR330C

Inspection

NIBR0102

WHEEL CYLINDER

NIBR0102S01

- Check wheel cylinder for leakage.
- Check for wear, damage and loose conditions. Replace if any such condition exists.

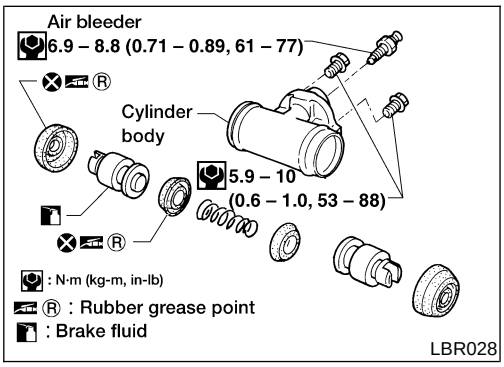

LBR028

WHEEL CYLINDER OVERHAUL

NIBR0102S02

- Check all internal parts for wear, rust and damage. Replace if necessary.
- Be careful not to scratch cylinder when installing pistons.

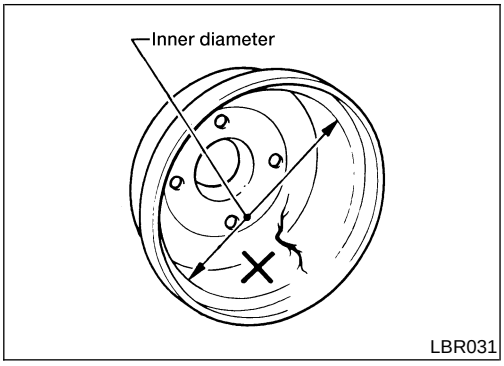

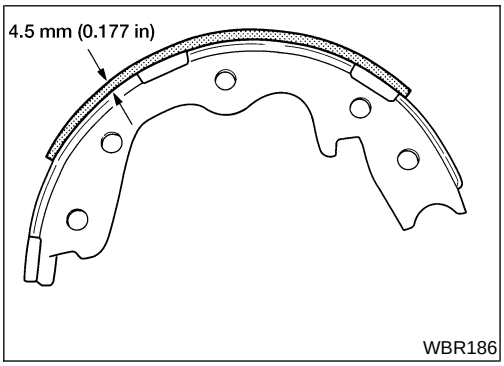

DRUM

NIBR0102S03

Maximum inner diameter:
204.5 mm (8.05 in)
Out-of-roundness:
0.03 mm (0.0012 in) or less

- Contact surface should be fine finished with No. 120 to 150 emery paper.
- Using a drum lathe, resurface brake drum if it shows score, partial wear or stepped wear.
- After brake drum has been completely reconditioned or replaced, check drum and shoes for proper contact pattern.

LINING

NIBR0102S04

Check lining thickness.

Standard lining thickness:
4.5 mm (0.177 in)
Lining wear limit:
1.5 mm (0.059 in)

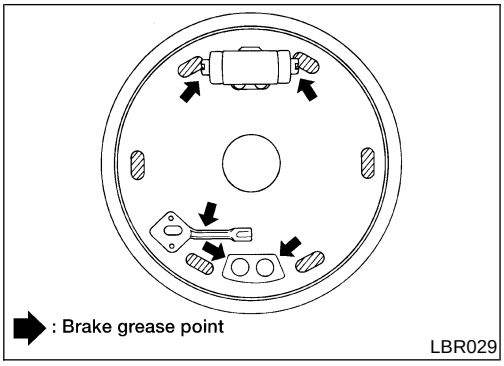

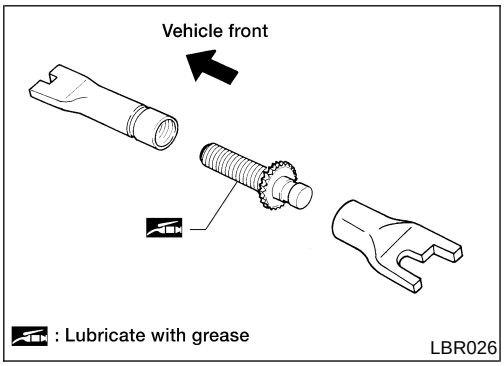

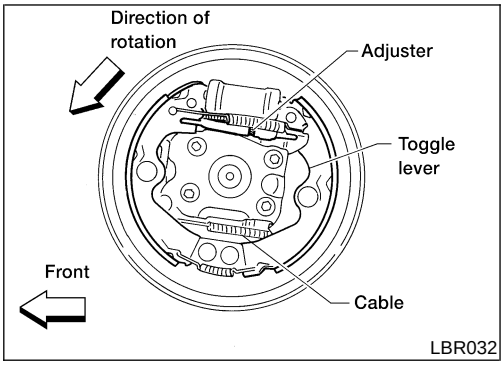

Installation

=NIBR0103

- **Always perform shoe clearance adjustment. Refer to "Adjustment", BR-37.**
- **Burnish the brake contact surfaces after refinishing or replacing drums, after replacing linings, or if a soft pedal occurs at very low mileage. Refer to "Brake Burnishing Procedure", BR-7.**

1. Fit toggle lever to brake shoe with retainer ring.
2. Apply brake grease to the contact areas shown at left.
3. Shorten adjuster by rotating it.
   - Pay attention to direction of adjuster.

Wheel	Screw
Left	Left-hand thread
Right	Right-hand thread

4. Connect parking brake cable to toggle lever.
5. Install all parts.

Be careful not to damage wheel cylinder piston boots.

6. Check that all parts are installed properly.

Pay attention to direction of adjuster assembly.

7. Install brake drum.
8. When installing new wheel cylinder or overhauling wheel cylinder, bleed air. Refer to "Bleeding Brake System", BR-8.
9. Adjust parking brake. Refer to "Adjustment", BR-37.

Components

NIBR0044

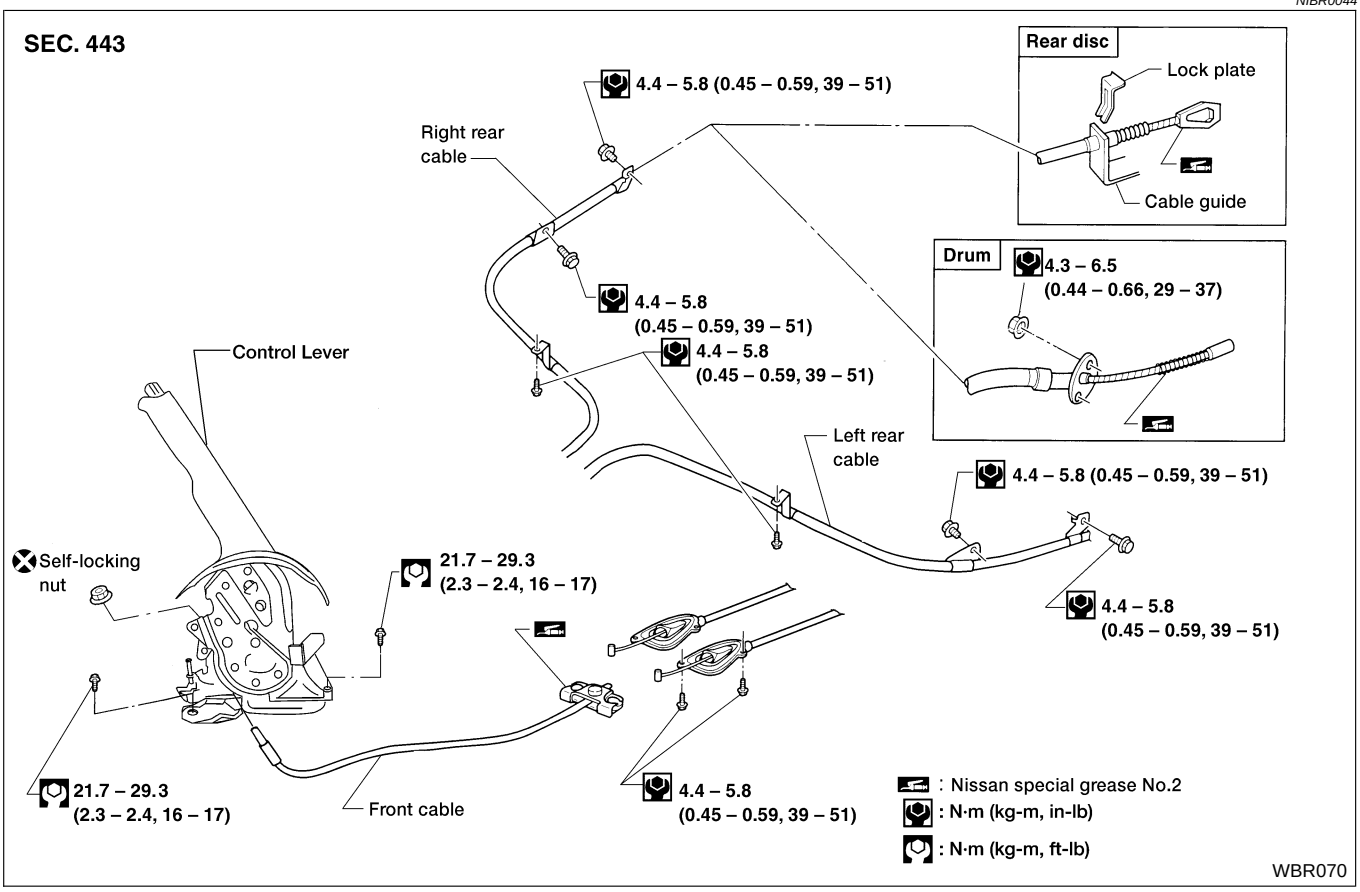

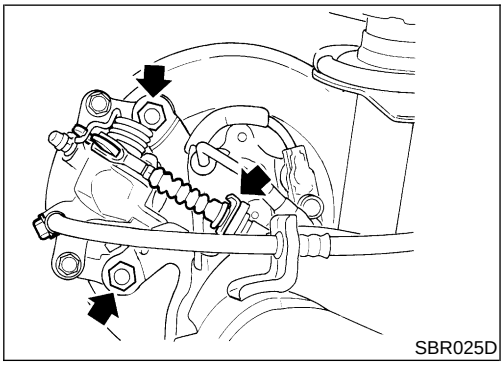

Removal and Installation

NIBR0045

1. Remove center console. Refer to ***BT-21***, “Removal and Installation”.
2. Disconnect the parking brake front cable.
3. Remove the control lever.
4. Remove bolts, slacken off and remove the front cable.
5. Remove lock plate and disconnect cable.
6. Remove the rear cables.

Inspection

NIBR0046

1. Check control lever or parking brake pedal assembly for wear or other damage. Replace if necessary.
2. Check cables for discontinuity or deterioration. Replace if necessary.
3. Check warning lamp and switch. Replace if necessary.
4. Check parts at each connecting portion and, if found deformed or damaged, replace.

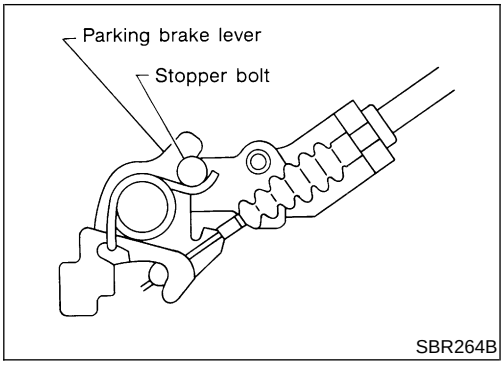

Adjustment

=NIBR0047

Pay attention to the following points after adjustment.

1) There is no drag when control lever is being released.
2) Be sure that toggle lever returns to stopper when parking brake lever is released.

1. Loosen parking brake cable.
2. Depress brake pedal fully more than five times.
3. Operate control lever 10 times or more with a full stroke [215.2 mm (8.47 in)].
4. Adjust control lever by turning adjusting nut.
5. Pull control lever with specified amount of force. Check lever stroke and ensure smooth operation.

   Number of notches:

   6 - 7 [196 N (20 kg, 44 lb)]
6. Bend warning lamp switch plate. Warning lamp should come on when lever is pulled or depressed one notch. It should go off when the lever is fully released.

Purpose

NIBR0104

The Anti-Lock Brake System (ABS) consists of electronic and hydraulic components. It allows for control of braking force so locking of the wheels can be avoided.

1) Improves proper tracking performance through steering wheel operation.
2) Eases obstacle avoidance through steering wheel operation.
3) Improves vehicle stability.

Operation

NIBR0105

- When the vehicle speed is less than 10 km/h (6 MPH) this system does not work.
- The Anti-Lock Brake System (ABS) has a self-test function. The system turns on the ABS warning lamp for 1 second each time the ignition switch is turned “ON”. After the engine is started, the ABS warning lamp turns off. The system performs a test the first time the vehicle reaches 6 km/h (4 MPH). A mechanical noise may be heard as the ABS performs this self-test. This is a normal part of the self-test feature. If a malfunction is found during this check, the ABS warning lamp will stay on.
- While driving, a mechanical noise may be heard during ABS operation. This is a normal condition.

ABS Hydraulic Circuit

NIBR0106

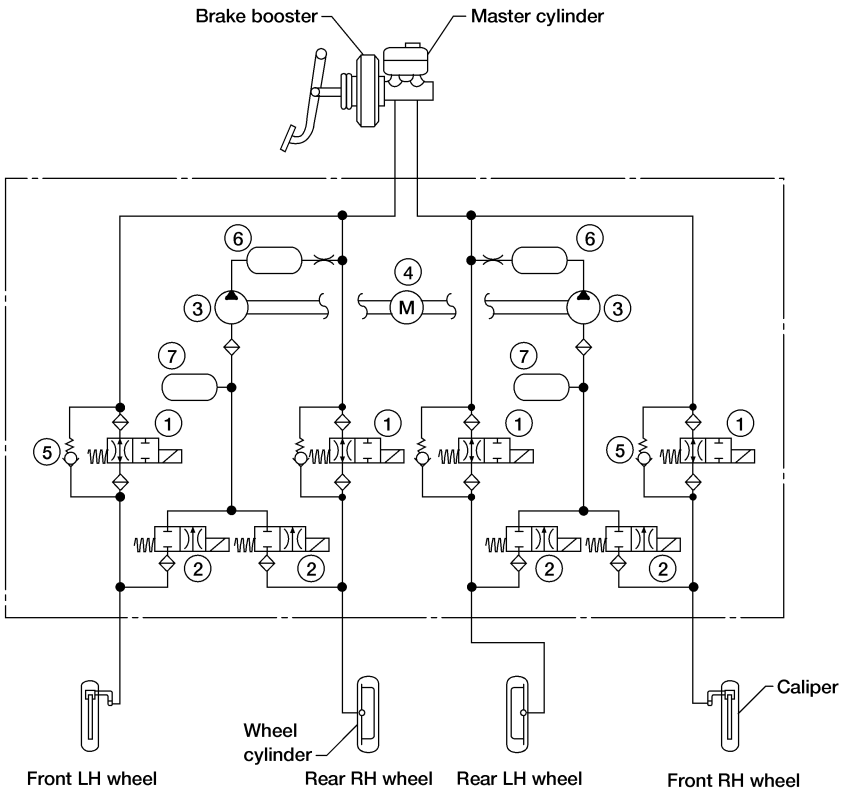

ABR752

1. Inlet solenoid valve
2. Outlet solenoid valve
3. Pump
4. Motor
5. Bypass check valve
6. Damper
7. Solenoid valve relay actuator

System Components

NIBR0107

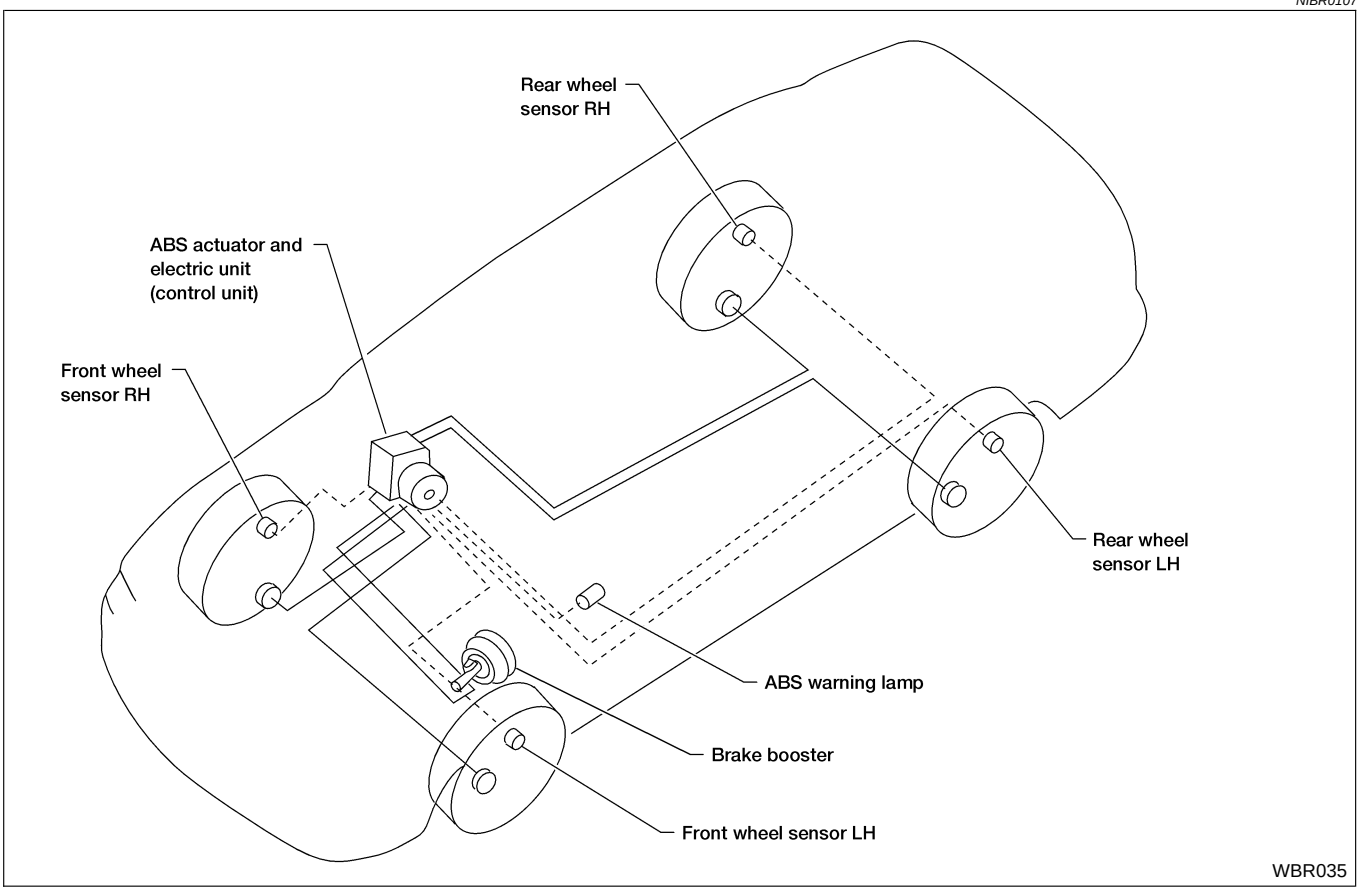

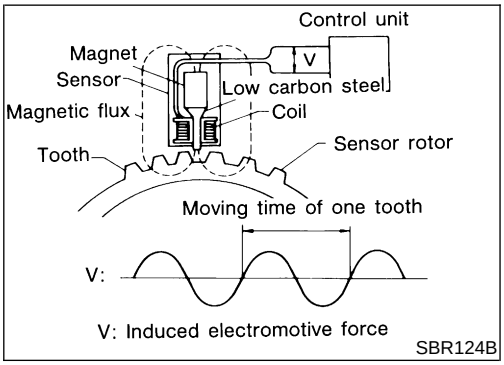

System Description

NIBR0108

SENSOR

NIBR0108S01

The sensor unit consists of a gear-shaped sensor rotor and a sensor element. The element contains a bar magnet around which a coil is wound. The front sensors are installed on the front spindles and the rear sensors are installed on the rear spindles. As the wheel rotates, the sensor generates a sine-wave pattern. The frequency and voltage increase(s) as the rotating speed increases.

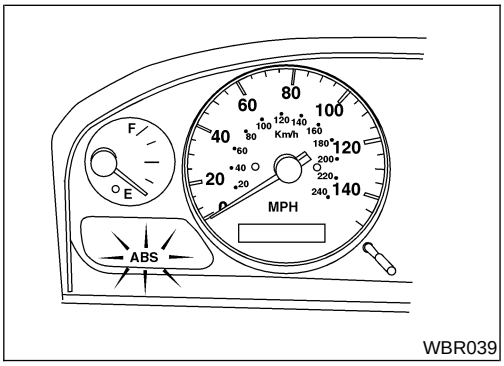

CONTROL UNIT (BUILT-IN ABS ACTUATOR AND ELECTRIC UNIT)

NIBR0108S02

The control unit computes the wheel rotating speed by the signal current sent from the sensor. Then it supplies a DC current to the actuator solenoid valve. It also controls ON-OFF operation of the valve relay and motor relay. If any electrical malfunction should be detected in the system, the control unit causes the warning lamp to light up. In this condition, the ABS will be deactivated by the control unit, and the vehicle's brake system reverts to normal operation. (For control unit layout, refer to "ABS ACTUATOR AND ELECTRIC UNIT", BR-40.)

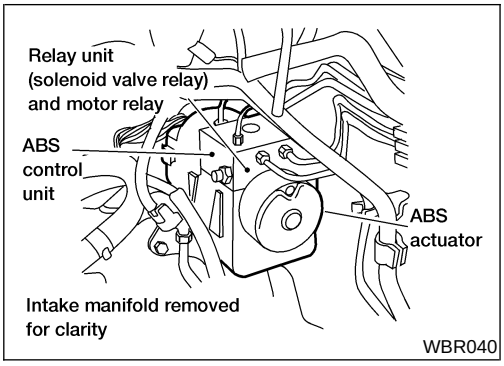

ABS ACTUATOR AND ELECTRIC UNIT

NIBR0108S03

The ABS actuator and electric unit contains:

- An electric motor and pump
- Two relays
- Eight solenoid valves, each inlet and outlet for
  - — LH front
  - — RH front
  - — LH rear
  - — RH rear
- ABS control unit

This component controls the hydraulic circuit and increases, holds or decreases hydraulic pressure to all or individual wheels. The ABS actuator and electric unit is serviced as an assembly.

ABS Actuator Operation

NIBR0108S0301

		Inlet solenoid valve	Outlet solenoid valve	
Normal brake operation		OFF (Open)	OFF (Closed)	Master cylinder brake fluid pressure is directly transmitted to caliper via the inlet solenoid valve.
ABS operation	Pressure hold	ON (Closed)	OFF (Closed)	Hydraulic circuit is shut off to hold the caliper brake fluid pressure.
	Pressure decrease	ON (Closed)	ON (Open)	Caliper brake fluid is sent to reservoir via the outlet solenoid valve. Then it is pushed up to the master cylinder by pump.
	Pressure increase	OFF (Open)	OFF (Closed)	Master cylinder brake fluid pressure is transmitted to caliper.

Component Parts and Harness Connector Location

NIBR0109

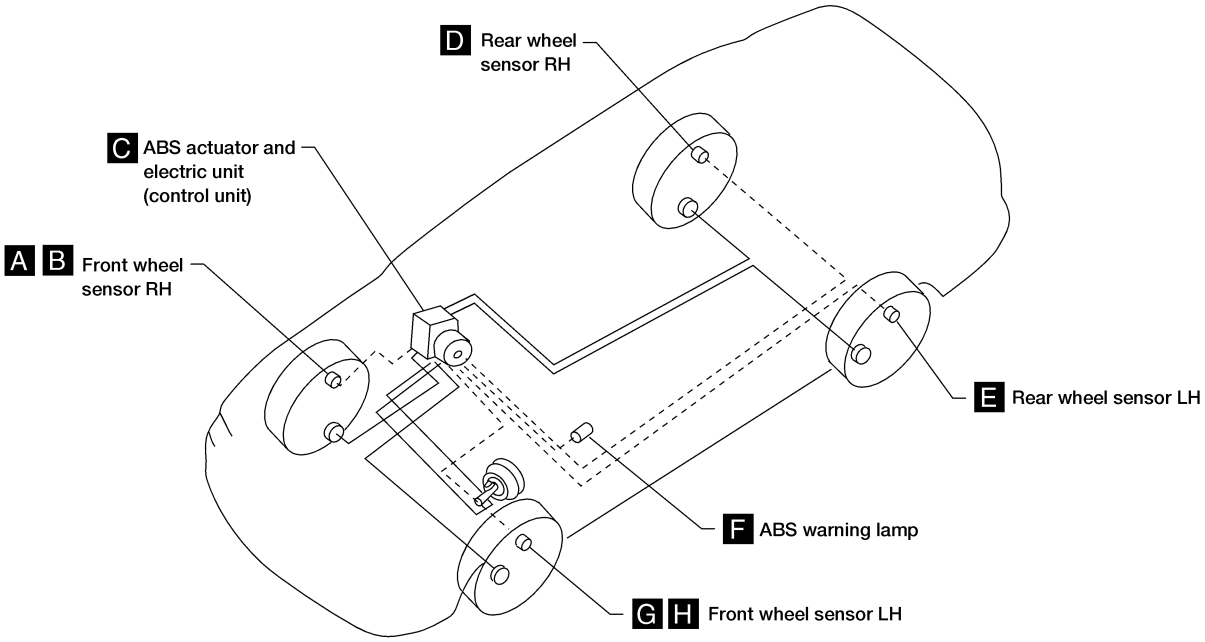

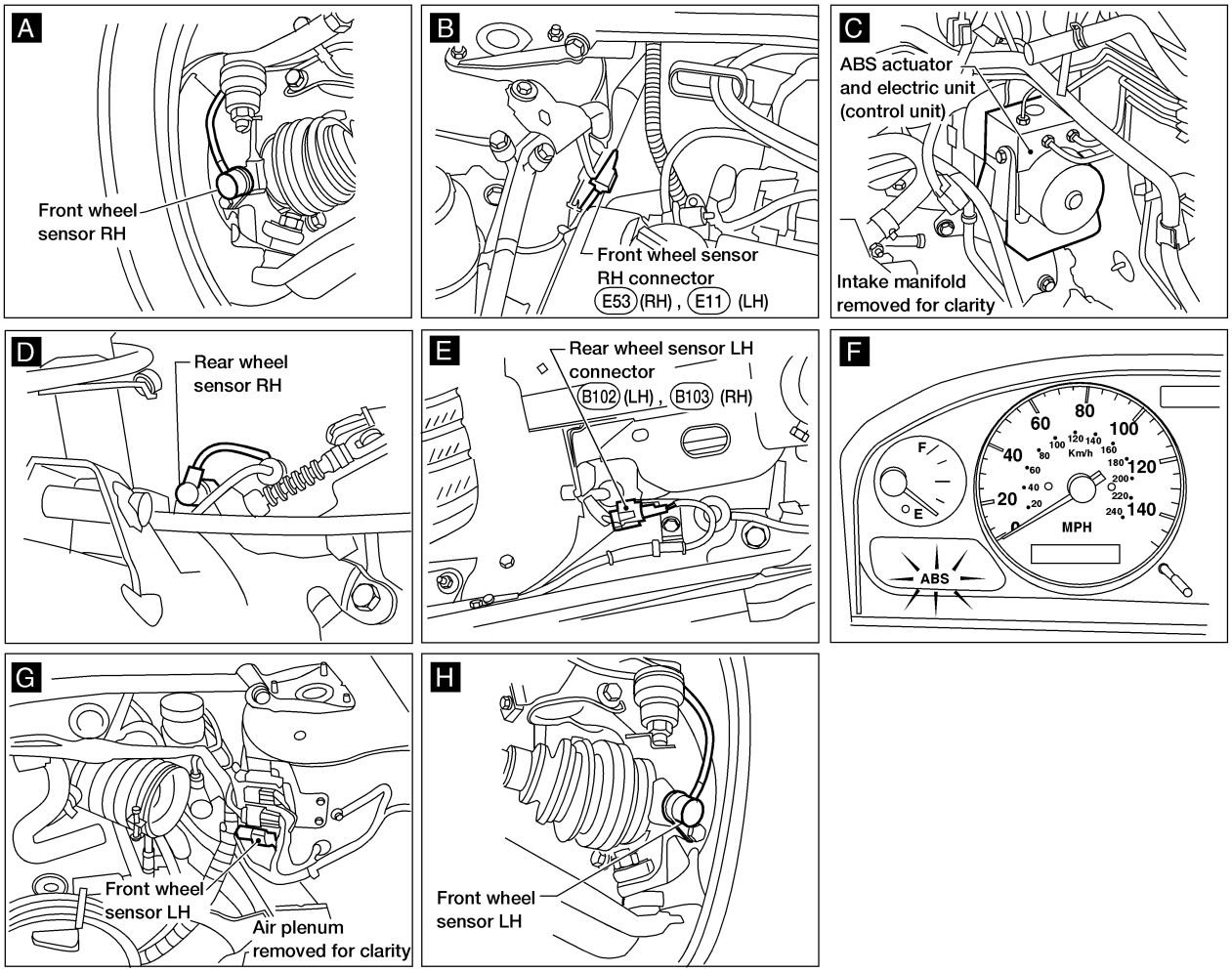

WBR046

Schematic

NIBR0110

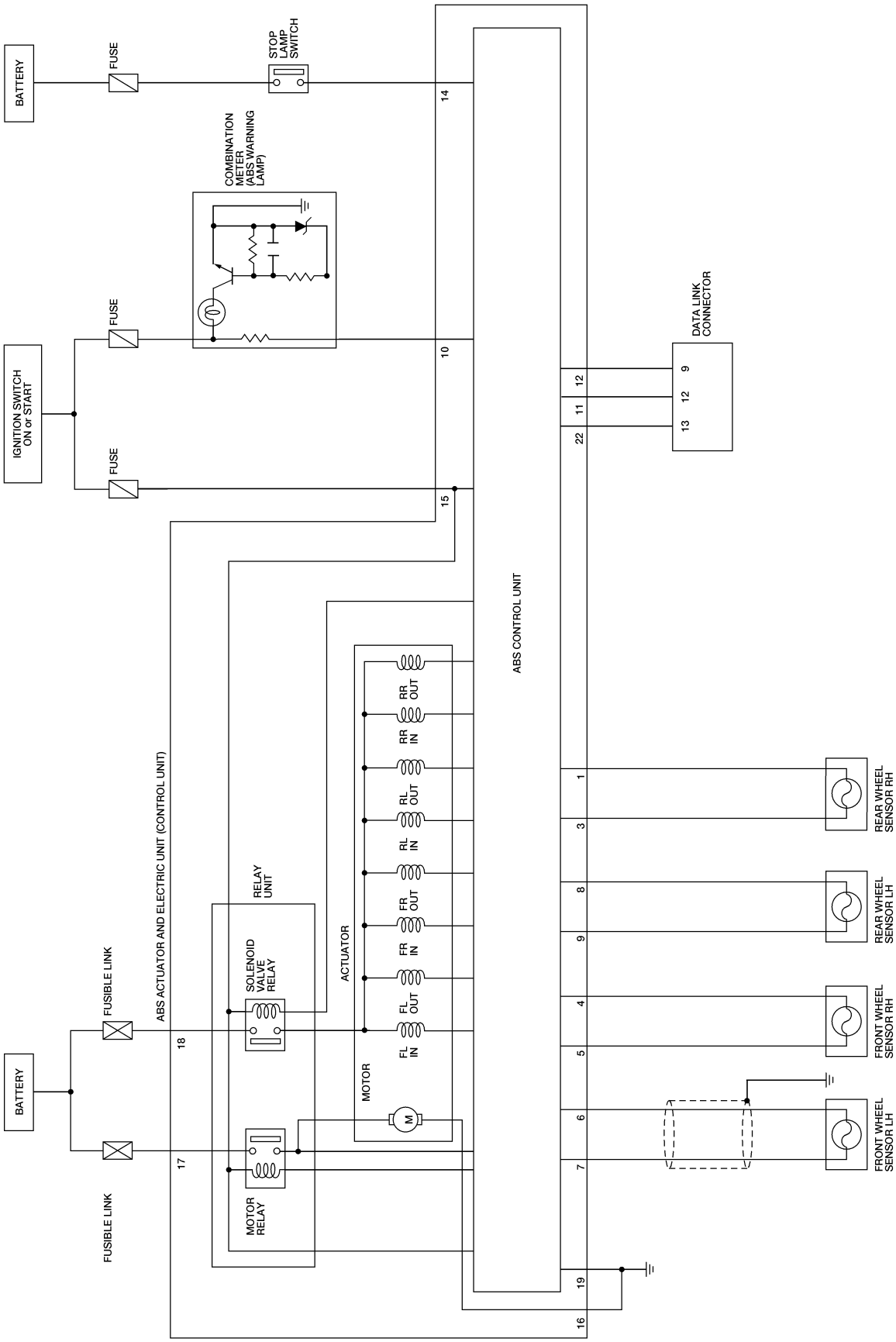

WBR018

Wiring Diagram — ABS —

NIBR0111

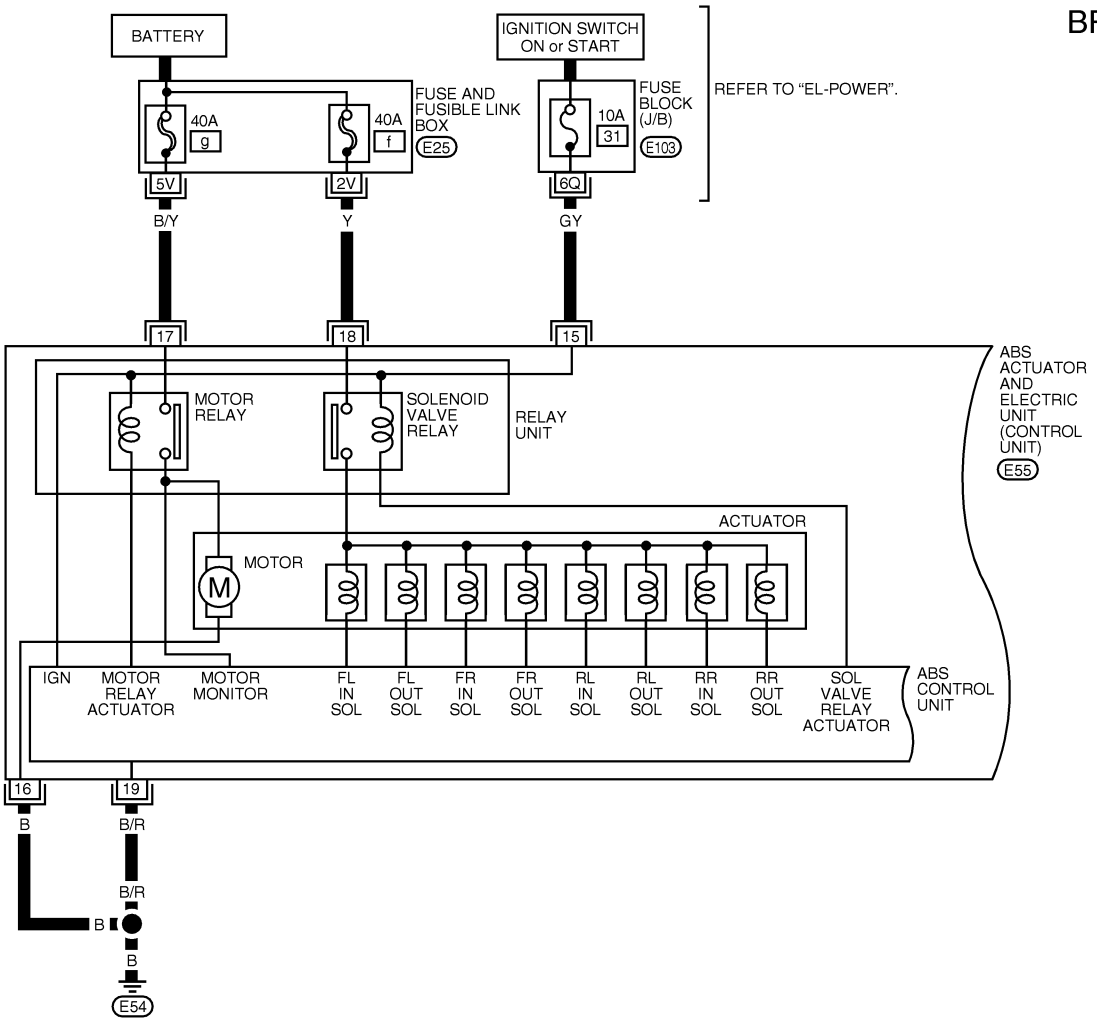

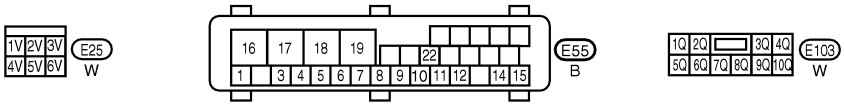

WBR019

ABS ACTUATOR AND ELECTRIC UNIT (CONTROL UNIT)
TERMINALS AND REFERENCE VALUE MEASURED BETWEEN EACH TERMINAL AND GROUND

TERMINAL	WIRE COLOR	ITEM	CONDITION	DATA (DC)
15	GY	POWER SOURCE (FUSE)	IGNITION ON OR START	BATTERY VOLTAGE
16	B	GROUND	—	—
17	B/Y	POWER SOURCE (FUSE)	BATTERY	BATTERY VOLTAGE
18	Y	POWER SOURCE (FUSE)	BATTERY	BATTERY VOLTAGE
19	B/R	GROUND	—	—

LBR071

BR-ABS-02

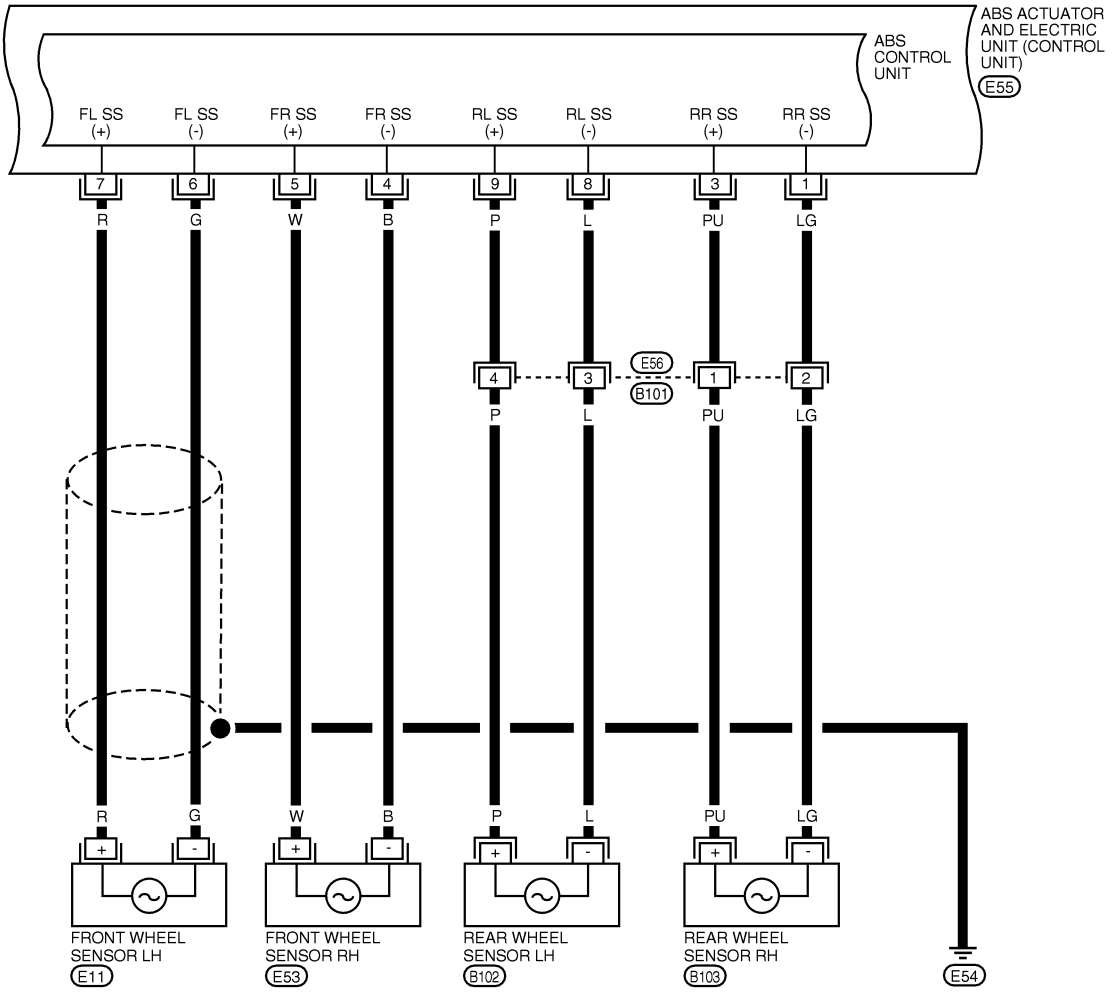

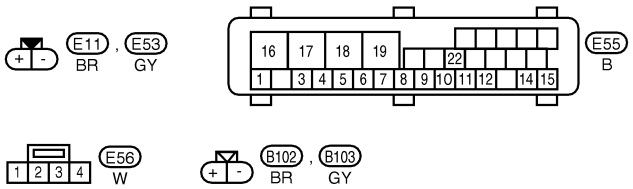

WBR020

ABS ACTUATOR AND ELECTRIC UNIT (CONTROL UNIT)
TERMINALS AND REFERENCE VALUE MEASURED BETWEEN EACH TERMINAL AND GROUND

TERMINAL	WIRE COLOR	ITEM	CONDITION	DATA (DC)
1	LG	REAR WHEEL SENSOR RH	WHEN VEHICLE CRUISES AT 30 KM/H (19 MPH)	PULSE FRONT: APPROX. 190 HZ REAR: APPROX. 190 HZ
3	PU	REAR WHEEL SENSOR RH		
4	B	FRONT WHEEL SENSOR RH		
5	W	FRONT WHEEL SENSOR RH		
6	G	FRONT WHEEL SENSOR LH		
7	R	FRONT WHEEL SENSOR LH		
8	L	REAR WHEEL SENSOR LH		
9	P	REAR WHEEL SENSOR LH		

LBR072

BR-ABS-03

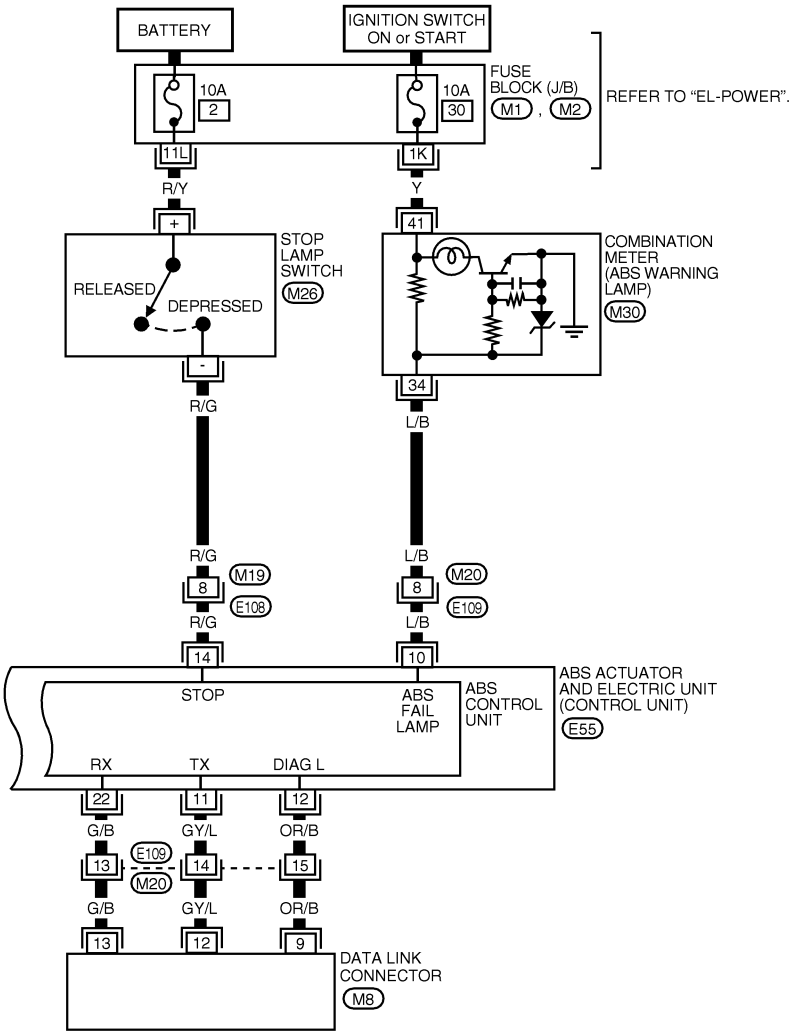

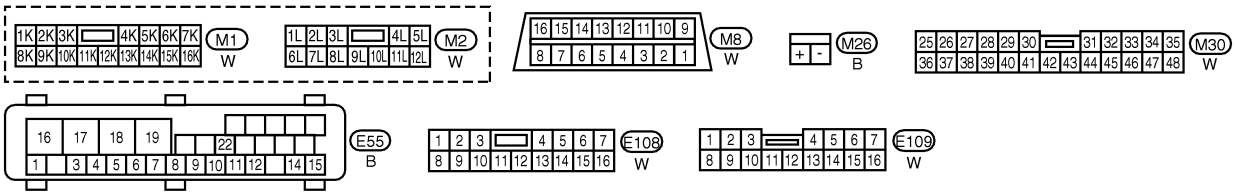

WBR021

ABS ACTUATOR AND ELECTRIC UNIT (CONTROL UNIT)
TERMINALS AND REFERENCE VALUE MEASURED BETWEEN EACH TERMINAL AND GROUND

TERMINAL	WIRE COLOR	ITEM	CONDITION	DATA (DC)
10	L/B	ABS WARNING LAMP IN IN COMBINATION METER	WHEN ABS LAMP IS ACTIVE	APPROX. 0V
			WHEN ABS LAMP IS NOT ACTIVE	BATTERY VOLTAGE
11	GY/L	DATA LINK CONNECTOR	—	—
12	OR/B	DATA LINK CONNECTOR	—	—
14	R/G	STOP LAMP SWITCH	WHEN BRAKE PEDAL IS DEPRESSED	BATTERY VOLTAGE
			WHEN BRAKE PEDAL IS RELEASED	APPROX. 0V
22	G/B	DATA LINK CONNECTOR	—	—

LBR073

Self-diagnosis

NIBR0112

FUNCTION

NIBR0112S01

- When a problem occurs in the ABS, the warning lamp on the instrument panel comes on. To start the self-diagnostic results mode, ground the self-diagnostic (check) terminal located on “Data Link Connector”. The location of the malfunction is indicated by the warning lamp flashing.

SELF-DIAGNOSIS PROCEDURE

NIBR0112S02

1. Drive vehicle over 30 km/h (19 MPH) for at least one minute.
2. Turn ignition switch OFF.
3. Ground terminal 9 of “Data Link Connector” with a suitable harness.
4. Turn ignition switch ON while grounding terminal 9.
   Do not depress brake pedal.

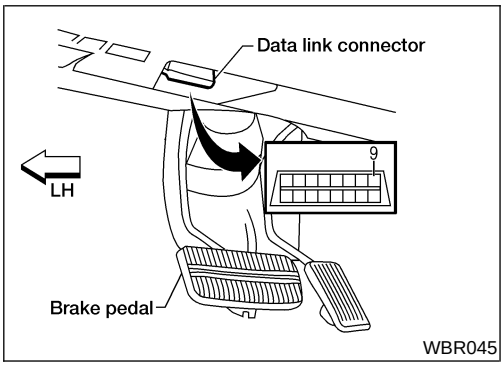

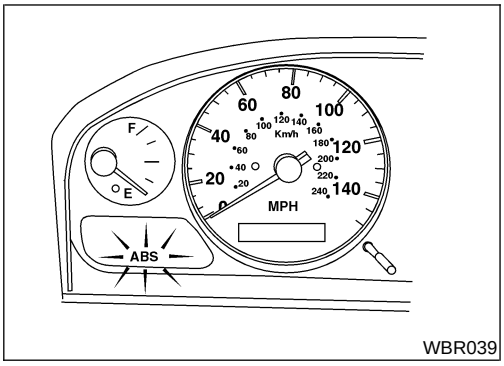

5. After 3.0 seconds, the warning lamp starts flashing to indicate the malfunction code No. (See NOTE.)
6. Verify the location of the malfunction with the malfunction code chart. Refer to “Malfunction Code/Symptom Chart”, BR-59. Then make the necessary repairs following the diagnostic procedures.
7. After the malfunctions are repaired, erase the malfunction codes stored in the control unit. Refer to “HOW TO ERASE SELF-DIAGNOSTIC RESULTS (MALFUNCTION CODES)”, BR-47.
8. Rerun the self-diagnostic results mode to verify that the malfunction codes have been erased.

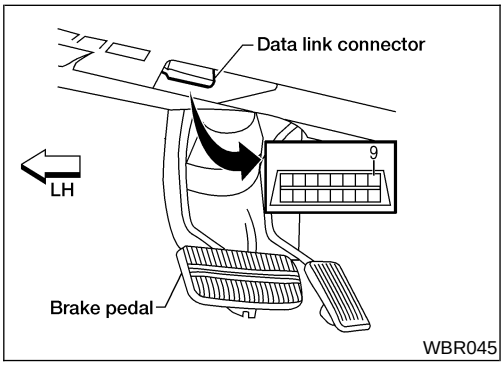

9. Disconnect the check terminal from the ground. The self-diagnostic results mode is now complete.
10. Check warning lamp for deactivation after driving vehicle over 30 km/h (19 MPH) for at least one minute.
11. After making certain that warning lamp does not come on, test the ABS in a safe area to verify that it functions properly.

NOTE:
The indication terminates after 5 minutes.
However, when the ignition switch is turned from OFF to ON, the indication starts flashing again.

HOW TO READ SELF-DIAGNOSTIC RESULTS (MALFUNCTION CODES)

=NIBR0112S03

1. Determine the code No. by counting the number of times the warning lamp flashes on and off.
2. When several malfunctions occur at one time, up to three code numbers can be stored; the latest malfunction will be indicated first.
3. The indication begins with the start code 12. After that a maximum of three code numbers appear in the order of the latest one first. The indication then returns to the start code 12 to repeat (the indication will stay on for five minutes at the most).
4. The malfunction code chart is given on page "Malfunction Code/Symptom Chart", BR-59.

Example: Code No. 32 REAR SENSOR SHORT-CIRCUIT

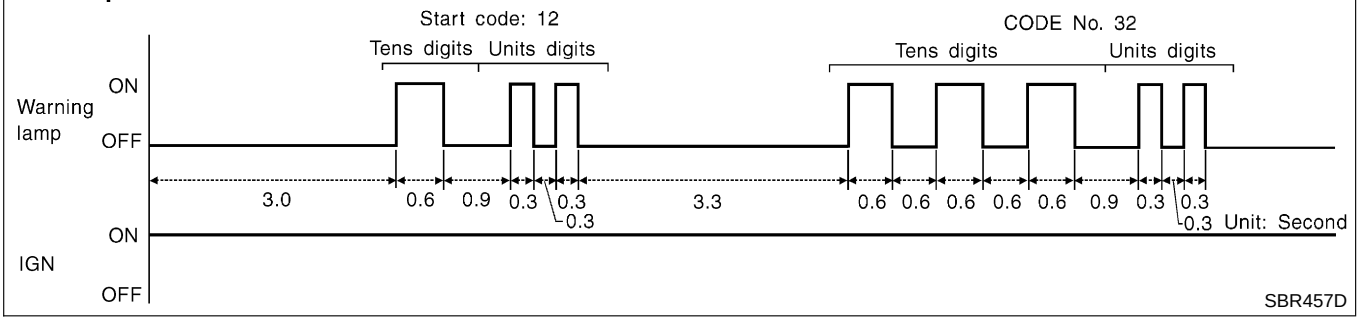

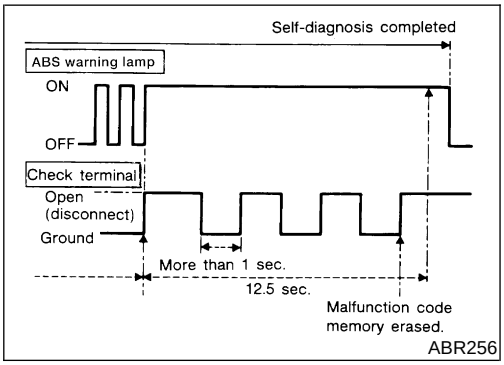

HOW TO ERASE SELF-DIAGNOSTIC RESULTS (MALFUNCTION CODES)

NIBR0112S04

1. Disconnect the check terminal from ground (ABS warning lamp will stay lit).
2. Within 12.5 seconds, ground the check terminal three times. Each terminal ground must last more than 1 second. The ABS warning lamp goes out after the erase operation has been completed.
3. Perform self-diagnosis again. Refer to "SELF-DIAGNOSIS PROCEDURE", BR-46. Only the start code should appear, no malfunction codes.

CONSULT-II

=NIBR0113

CONSULT-II APPLICATION TO ABS

NIBR0113S01

ITEM	SELF-DIAGNOSTIC RESULTS	DATA MONITOR	ACTIVE TEST
Front right wheel sensor	×	×	—
Front left wheel sensor	×	×	—
Rear right wheel sensor	×	×	—
Rear left wheel sensor	×	×	—
ABS sensor	×	—	—
Stop lamp switch	—	×	—
Front right inlet solenoid valve	×	×	×
Front right outlet solenoid valve	×	×	×
Front left inlet solenoid valve	×	×	×
Front left outlet solenoid valve	×	×	×
Rear right inlet solenoid valve	×	×	×
Rear right outlet solenoid valve	×	×	×
Rear left inlet solenoid valve	×	×	×
Rear left outlet solenoid valve	×	×	×
Actuator solenoid valve relay	×	×	—
Actuator motor relay (ABS MOTOR is shown on the Data Monitor screen.)	×	×	×
ABS warning lamp	—	×	—
Battery voltage	×	×	—
Control unit	×	—	—

×: Applicable
—: Not applicable

ECU (ABS CONTROL UNIT) PART NUMBER MODE

NIBR0113S02

Ignore the ECU part number displayed in the ECU PART NUMBER MODE. Refer to parts catalog to order the ECU.

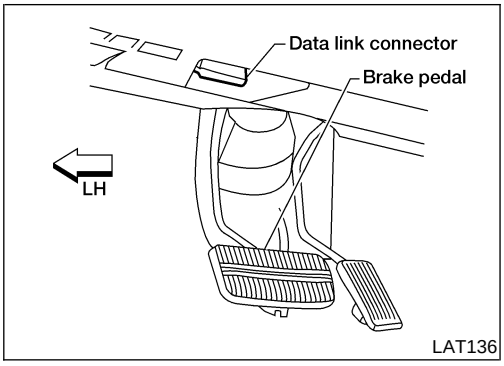

LAT136

CONSULT-II Inspection Procedure

=NIBR0114

SELF-DIAGNOSIS PROCEDURE

NIBR0114S01

1. Turn ignition switch OFF.
2. Connect CONSULT-II to Data Link Connector.
3. Start engine.
4. Drive vehicle over 30 km/h (19 MPH) for at least one minute.

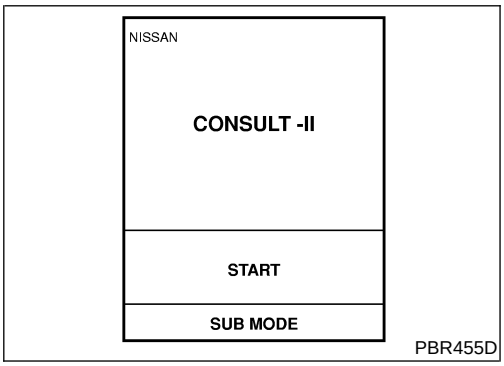

PBR455D

5. Stop vehicle with engine running and touch “START” on CONSULT-II screen.

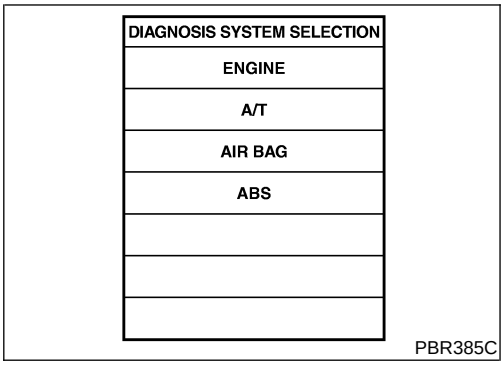

PBR385C

6. Touch “ABS”.

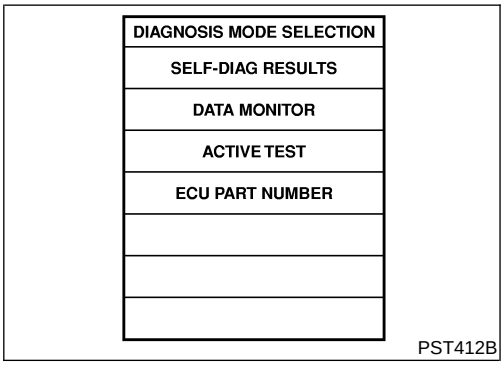

PST412B

7. Touch “SELF-DIAG RESULTS”.

- The screen shows the detected malfunction and how many times the ignition switch has been turned ON since the malfunction.

8. Make the necessary repairs following the diagnostic procedures.

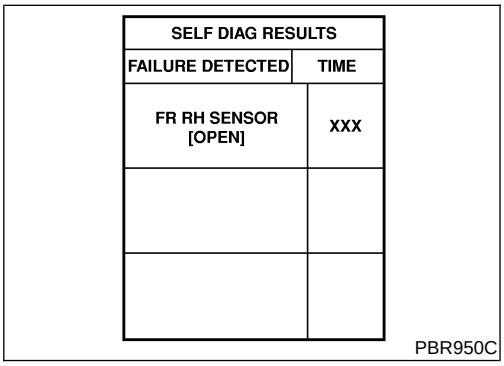

PBR950C

9. After the malfunctions are repaired, erase the self-diagnostic results stored in the control unit by touching “ERASE”.
10. Check warning lamp for deactivation after driving vehicle over 30 km/h (19 MPH) for at least one minute.
11. Test the ABS in a safe area to verify that it functions properly.

SELF-DIAGNOSTIC RESULTS MODE

NIBR0114S02

Diagnostic item	Diagnostic item is detected when ...	Reference Page
FR RH SENSOR★ [OPEN]	● Circuit for front right wheel sensor is open. (An abnormally high input voltage is entered.)	BR-60
FR LH SENSOR★ [OPEN]	● Circuit for front left wheel sensor is open. (An abnormally high input voltage is entered.)	BR-60
RR RH SENSOR★ [OPEN]	● Circuit for rear right sensor is open. (An abnormally high input voltage is entered.)	BR-60
RR LH SENSOR★ [OPEN]	● Circuit for rear left sensor is open. (An abnormally high input voltage is entered.)	BR-60
FR RH SENSOR★ [SHORT]	● Circuit for front right wheel sensor is shorted. (An abnormally low input voltage is entered.)	BR-60
FR LH SENSOR★ [SHORT]	● Circuit for front left wheel sensor is shorted. (An abnormally low input voltage is entered.)	BR-60
RR RH SENSOR★ [SHORT]	● Circuit for rear right sensor is shorted. (An abnormally low input voltage is entered.)	BR-60
RR LH SENSOR★ [SHORT]	● Circuit for rear left sensor is shorted. (An abnormally low input voltage is entered.)	BR-60
ABS SENSOR★ [ABNORMAL SIGNAL]	● Teeth damage on sensor rotor or improper installation of wheel sensor. (Abnormal wheel sensor signal is entered.)	BR-60
FR RH IN ABS SOL [OPEN, SHORT]	● Circuit for front right inlet solenoid valve is open. (An abnormally low output voltage is entered.)	BR-63
FR LH IN ABS SOL [OPEN, SHORT]	● Circuit for front left inlet solenoid valve is open. (An abnormally low output voltage is entered.)	BR-63
FR RH OUT ABS SOL [OPEN, SHORT]	● Circuit for front right outlet solenoid valve is open. (An abnormally low output voltage is entered.)	BR-63
FR LH OUT ABS SOL [OPEN, SHORT]	● Circuit for front left outlet solenoid valve is open. (An abnormally low output voltage is entered.)	BR-63
RR RH IN ABS SOL [OPEN, SHORT]	● Circuit for rear right inlet solenoid valve is shorted. (An abnormally high output voltage is entered.)	BR-63
RR LH IN ABS SOL [OPEN, SHORT]	● Circuit for rear left inlet solenoid valve is shorted. (An abnormally high output voltage is entered.)	BR-63
RR RH OUT ABS SOL [OPEN, SHORT]	● Circuit for rear right outlet solenoid valve is shorted. (An abnormally high output voltage is entered.)	BR-63
RR LH OUT ABS SOL [OPEN, SHORT]	● Circuit for rear left outlet solenoid valve is shorted. (An abnormally high output voltage is entered.)	BR-63
ABS ACTUATOR RELAY [ABNORMAL]	● Actuator solenoid valve relay is ON, even if control unit sends off signal. ● Actuator solenoid valve relay is OFF, even if control unit sends on signal.	BR-63
ABS MOTOR RELAY [ABNORMAL]	● Circuit for ABS motor relay is open or shorted. ● Circuit for actuator motor is open or shorted. ● Actuator motor relay is stuck.	BR-65
BATTERY VOLT [VB-LOW]	● Power source voltage supplied to ABS control unit is abnormally low.	BR-67
CONTROL UNIT	● Function of calculation in ABS control unit has failed.	BR-69

★: If one or more wheels spin on a rough or slippery road for 40 seconds or more, the ABS warning lamp will illuminate. This does not indicate a malfunction. Only in the case of the short-circuit (Code Nos. 26, 22, 32 and 36), after repair the ABS warning lamp also illuminates when the ignition switch is turned ON. In this case, drive the vehicle at speeds greater than 30 km/h (19 MPH) for approximately 1 minute as specified in "SELF-DIAGNOSIS PROCEDURE", BR-46. Check to ensure that the ABS warning lamp goes out while the vehicle is being driven.

DATA MONITOR PROCEDURE

NIBR0114S03

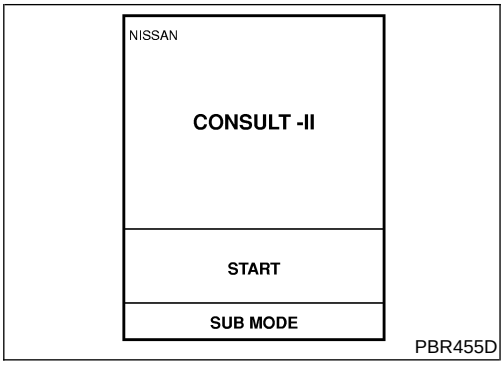

PBR455D

1. Turn ignition switch OFF.
2. Connect CONSULT-II to Data Link Connector.
3. Turn ignition switch ON.
4. Touch "START" on CONSULT-II screen.

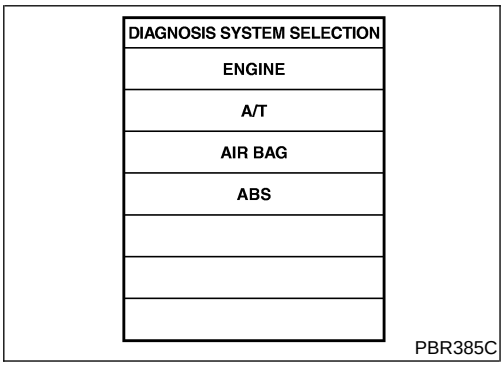

PBR385C

5. Touch "ABS".

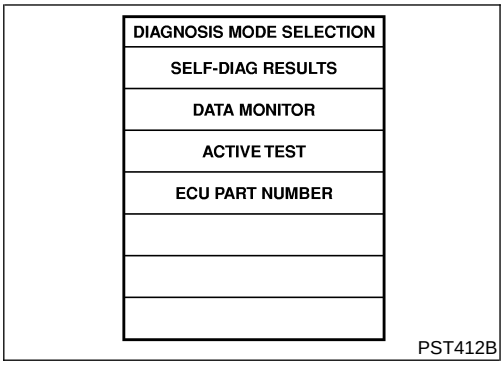

PST412B

6. Touch "DATA MONITOR".

ACTIVE TEST PROCEDURE

NIBR0114S04

- When conducting Active test, vehicle must be stationary.
- When ABS warning lamp stays on, never conduct Active test.

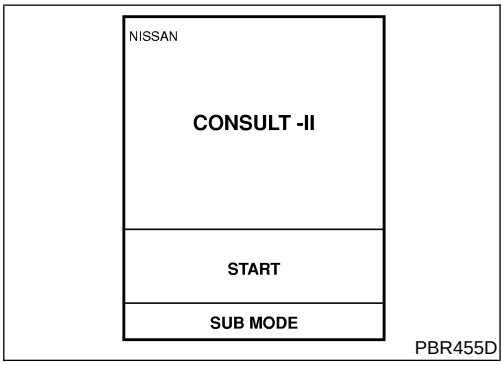

PBR455D

1. Turn ignition switch OFF.
2. Connect CONSULT-II to Data Link Connector.
3. Start engine.
4. Touch "START" on CONSULT-II screen.

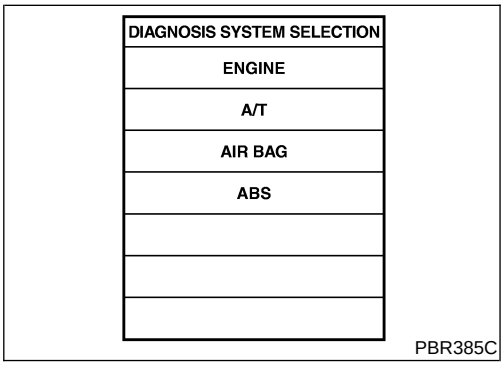

PBR385C

5. Touch "ABS".

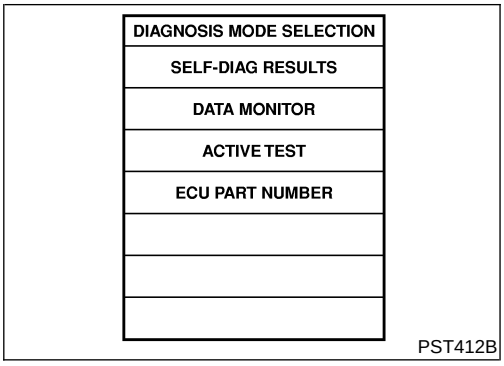

6. Touch "ACTIVE TEST".

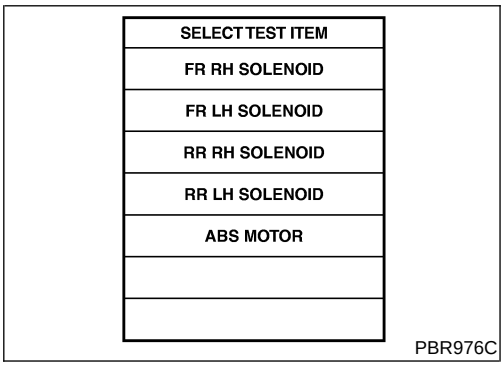

7. Select active test item by touching screen.

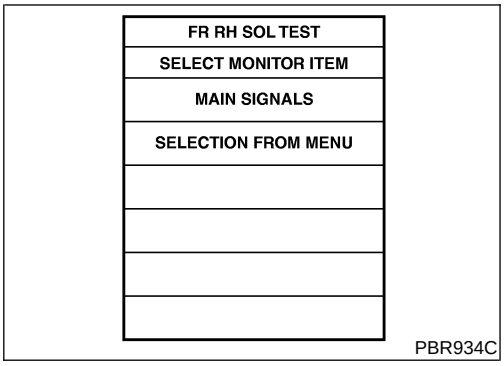

8. Touch "START".
9. Carry out the active test by touching screen key.

DATA MONITOR MODE

NIBR0114S05

MONITOR ITEM	CONDITION	SPECIFICATION
FR RH SENSOR FR LH SENSOR RR RH SENSOR RR LH SENSOR	Drive vehicle. (Each wheel is rotating.)	Wheel speed signal (Almost the same speed as speedometer.)
STOP LAMP SW	Brake is depressed.	Depress the pedal: ON Release the pedal: OFF
FR RH IN SOL FR RH OUT SOL FR LH IN SOL FR LH OUT SOL RR RH IN SOL RR RH OUT SOL RR LH IN SOL RR LH OUT SOL	1. Drive vehicle at speeds over 30 km/h (19 MPH) for at least 1 minute. 2. Engine is running.	Operating conditions for each solenoid valve are indicated. ABS is not operating: OFF
MOTOR RELAY		ABS is not operating: OFF ABS is operating: ON

MONITOR ITEM	CONDITION	SPECIFICATION
ACTUATOR RELAY	Ignition switch is ON or engine is running.	Ignition switch ON (Engine stops): OFF Engine running: ON
WARNING LAMP		ABS warning lamp is turned on: ON ABS warning lamp is turned off: OFF
BATTERY VOLT		Power supply voltage for control unit

ACTIVE TEST MODE

NIBR0114S06

TEST ITEM	CONDITION	JUDGEMENT		
FR RH SOL FR LH SOL RR RH SOL RR LH SOL	Engine is running.	Brake fluid pressure control operation		
			IN SOL	OUT SOL
		UP (Increase):	OFF	OFF
		KEEP (Hold):	ON	OFF
		DOWN (Decrease):	ON	ON
ABS MOTOR		ABS actuator motor ON: Motor runs (ABS motor relay ON) OFF: Motor stops (ABS motor relay OFF)		

NOTE:
Active test will automatically stop ten seconds after the test starts. (TEST IS STOPPED monitor shows ON.)

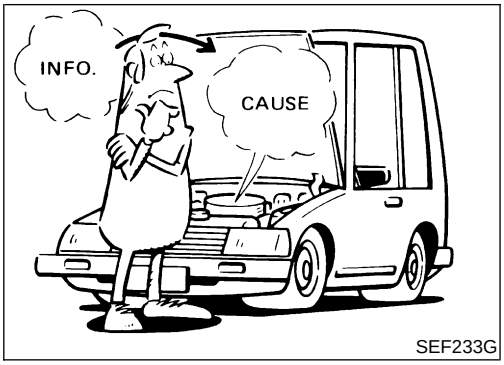

SEF233G

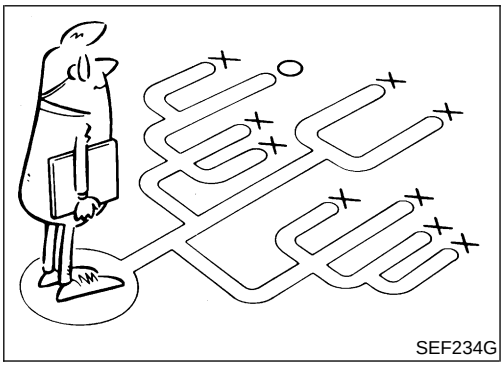
SEF234G

How to Perform Trouble Diagnoses for Quick and Accurate Repair

NIBR0115

INTRODUCTION

NIBR0115S01

The ABS system has an electronic control unit to control major functions. The control unit accepts input signals from sensors and instantly drives the actuators. It is essential that both kinds of signals are proper and stable. It is also important to check for conventional problems: such as air leaks in booster lines, lack of brake fluid, or other problems with the brake system.

It is much more difficult to diagnose a problem that occurs intermittently rather than continuously. Most intermittent problems are caused by poor electric connections or faulty wiring. In this case, careful checking of suspicious circuits may help prevent the replacement of good parts.

A visual check only may not find the cause of the problems, so a road test should be performed.

Before undertaking actual checks, take a few minutes to talk with a customer who approaches with an ABS complaint. The customer is a very good source of information on such problems; especially intermittent ones. By talking to the customer, find out what symptoms are present and under what conditions they occur. Start your diagnosis by looking for “conventional” problems first. This is one of the best ways to troubleshoot brake problems on an ABS controlled vehicle.

Also check related Service bulletins for information.

Preliminary Check

NIBR0116

1	CHECK BRAKE FLUID	
Check brake fluid for contamination.		
Has brake fluid been contaminated?		
Yes	▶	Replace. GO TO 2.
No	▶	GO TO 2.

2	CHECK BRAKE FLUID LEVEL	
Check brake fluid level in reservoir tank. Low fluid level may indicate brake pad wear or leakage from brake line.		
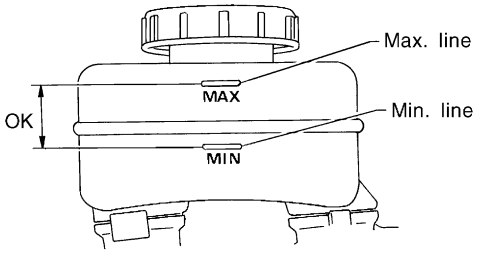 SBR451D		
Is brake fluid filled between MAX and MIN lines on reservoir tank ?		
Yes	▶	GO TO 3.
No	▶	Fill up brake fluid. GO TO 3.

3	CHECK BRAKE LINE	
Check brake line for leakage.		
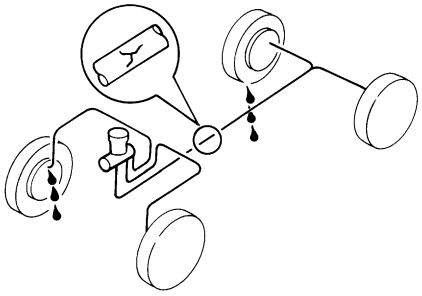 SBR389C		
Is leakage present at or around brake lines, tubes or hoses or are any of these parts cracked or damaged?		
Yes	▶	Repair. GO TO 4.
No	▶	GO TO 4.

4	CHECK BRAKE BOOSTER OPERATION

Check brake booster for operation. Refer to "OPERATING CHECK", BR-17. Also, check air tightness. Refer to "AIRTIGHT CHECK", BR-17.

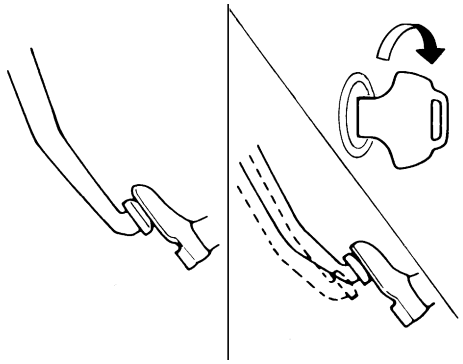

SBR058C

Is brake booster airtight and functioning properly?

Yes	▶	GO TO 5.
No	▶	Replace. GO TO 5.

5	CHECK BRAKE PAD AND ROTOR

Check brake pad and rotor.
Refer to "Pad Replacement", BR-20, "ROTOR", BR-22.

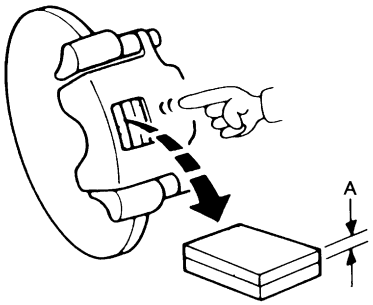

SBR059C

Are brake pads and rotors functioning properly?

Yes	▶	GO TO 6.
No	▶	Replace.

6	RECHECK BRAKE FLUID LEVEL

Check brake fluid level in reservoir tank again.

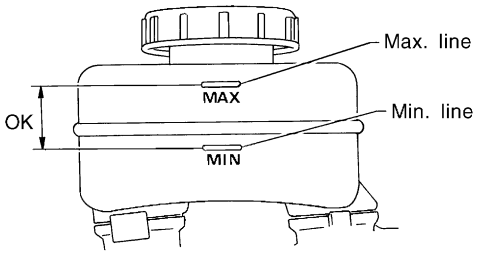

SBR451D

Is brake fluid filled between MAX and MIN lines on reservoir tank ?

Yes	▶	GO TO 7.
No	▶	Fill up brake fluid.

7	CHECK WARNING LAMP ACTIVATION

Check warning lamp activation.

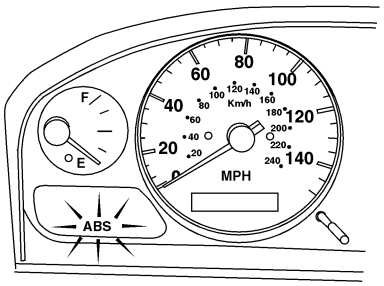

WBR039

Does warning lamp turn on when ignition switch is turned ON?

Yes	▶	GO TO 8.
No	▶	Check fuse, warning lamp bulb and warning lamp circuit.

8	CHECK WARNING LAMP DEACTIVATION

Check warning lamp for deactivation after engine is started.

Does warning lamp turn off when engine is started?

Yes	▶	GO TO 9.
No (with Consult-II)	▶	Refer to "SELF-DIAGNOSIS PROCEDURE", BR-49.
No (without Consult-II)	▶	Refer to "SELF-DIAGNOSIS PROCEDURE", BR-49.

9	DRIVE VEHICLE

Drive vehicle at speeds over 30 km/h (19 MPH) for at least one minute.

Does warning lamp remain off after vehicle has been driven at 30 km/h (19 MPH) for at least one minute?

Yes	▶	**INSPECTION END**
No (with Consult-II)	▶	Refer to "SELF-DIAGNOSIS PROCEDURE", BR-49.
No (without Consult-II)	▶	Refer to "SELF-DIAGNOSIS PROCEDURE", BR-49.

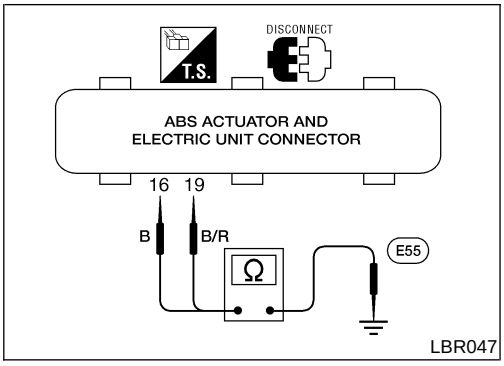

Ground Circuit Check

=NIBR0117

ABS ACTUATOR AND ELECTRIC UNIT GROUND

NIBR0117S01

- Check resistance between ABS actuator and electric unit connector terminals and ground.

  Resistance: approximately 0Ω

Malfunction Code/Symptom Chart

NIBR0118

Code No. (No. of warning lamp flashes)	Malfunctioning part	Reference Page
12	Self-diagnosis could not detect any malfunctions.	—
45	Actuator front left outlet solenoid valve	BR-63
46	Actuator front left inlet solenoid valve	BR-63
41	Actuator front right outlet solenoid valve	BR-63
42	Actuator front right inlet solenoid valve	BR-63
51	Actuator rear right outlet solenoid valve	BR-63
52	Actuator rear right inlet solenoid valve	BR-63
55	Actuator rear left outlet solenoid valve	BR-63
56	Actuator rear left inlet solenoid valve	BR-63
25 ★1	Front left sensor (open-circuit)	BR-60
26 ★1	Front left sensor (short-circuit)	BR-60
21 ★1	Front right sensor (open-circuit)	BR-60
22 ★1	Front right sensor (short-circuit)	BR-60
31 ★1	Rear right sensor (open-circuit)	BR-60
32 ★1	Rear right sensor (short-circuit)	BR-60
35 ★1	Rear left sensor (open-circuit)	BR-60
36 ★1	Rear left sensor (short-circuit)	BR-60
18 ★1	Sensor rotor	BR-60
61 ★3	Actuator motor or motor relay	BR-65
63	Solenoid valve relay	BR-63
57 ★2	Power supply (Low voltage)	BR-67
71	Control unit	BR-69
Warning lamp stays on when ignition switch is turned ON.	Control unit power supply circuit Warning lamp bulb circuit Control unit or control unit connector Solenoid valve relay stuck Power supply for solenoid valve relay coil	BR-76
Warning lamp does not come on when ignition switch is turned ON.	Fuse, warning lamp bulb or warning lamp circuit Control unit	BR-74
Pedal vibration and noise	—	BR-73
Long stopping distance	—	BR-71
Unexpected pedal action	—	BR-70
ABS does not work	—	BR-73
ABS works frequently	—	BR-70

★1: If one or more wheels spin on a rough or slippery road for 40 seconds or more, the ABS warning lamp will illuminate. This does not indicate a malfunction. Only in the case of the short-circuit (Code Nos. 26, 22, 32 and 36), after repair the ABS warning lamp also illuminates when the ignition switch is turned ON. In this case, drive the vehicle at speeds greater than 30 km/h (19 MPH) for approximately 1 minute as specified in “SELF-DIAGNOSIS PROCEDURE”, BR-46. Check to ensure that the ABS warning lamp goes out while the vehicle is being driven.

★2: The trouble code “57”, which refers to a low power supply voltage, does not indicate that the ABS control unit is malfunctioning. Do not replace the ABS control unit with a new one.

★3: The trouble code “61” can sometimes appear when the ABS motor is not properly grounded. If it appears, be sure to check the condition of the ABS motor ground circuit connection.

Wheel Sensor or Rotor

DIAGNOSTIC PROCEDURE

NIBR0119

Malfunction code No. 21, 22, 25, 26, 31, 32, 35, 36 or 18

NOTE:
Wheel position should be distinguished by code No. except code No. 18 (sensor rotor).

1	INSPECTION START
Wheel sensor inspection	

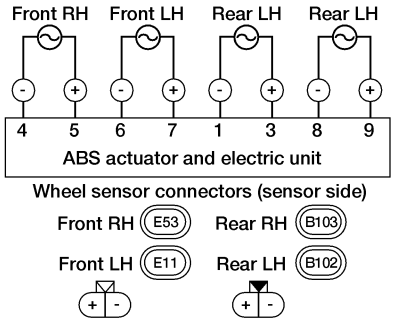

LBR048

▶	GO TO 2.

2	CHECK CONNECTOR
1. Disconnect connectors from ABS actuator and electric unit and wheel sensor of malfunction code No. Check terminals for damage or loose connection. Then reconnect connectors. 2. Carry out self-diagnosis again.	
Does warning lamp activate again?	
Yes ▶	GO TO 3.
No ▶	**INSPECTION END**

3	CHECK WHEEL SENSOR ELECTRICAL

1. Disconnect ABS actuator and electric unit connector.
2. Check resistance between ABS actuator and electric unit connector E55 (body side) terminals.
   Code No. 21 or 22 (Front RH wheel)
   Terminals 4 and 5
   Code No. 25 or 26 (Front LH wheel)
   Terminals 6 and 7
   Code No. 31 or 32 (Rear RH wheel)
   Terminals 1 and 3
   Code No. 35 or 36 (Rear LH wheel)
   Terminals 8 and 9

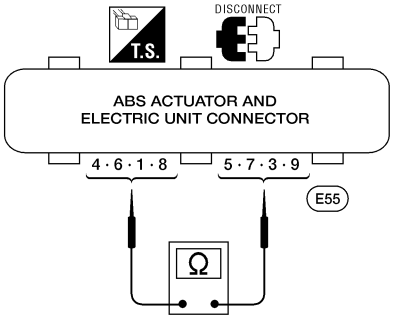

Resistance:
Front 1.45 - 1.85 k Ω
Rear 1.45 - 1.85 k Ω

LBR049

Is front resistance 1.45 - 1.85 kΩ and rear resistance 1.45 - 1.85 kΩ?

Yes	▶	GO TO 5.
No	▶	GO TO 4.

4	CHECK WHEEL SENSOR

Check each sensor for resistance.

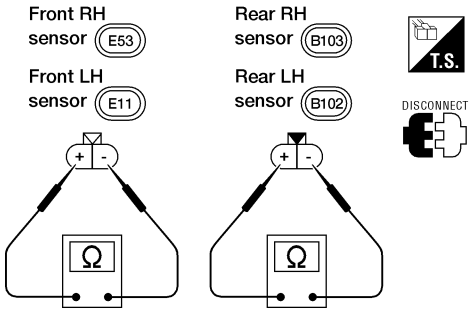

Resistance:
Front 1.45 - 1.85 k Ω
Rear 1.45 - 1.85 k Ω

LBR050

Is front resistance 1.45 - 1.85 kΩ and rear resistance 1.45 - 1.85 kΩ?

Yes	▶	**Check the following.** If NG, repair harness or connectors. ● Harness connectors E11, E53, E55, B102, B103 ● Harness for open or short between wheel sensor connectors and ABS actuator and electric unit
No	▶	Replace wheel sensor.

5	CHECK TIRE

Check for inflation pressure, wear and size of each tire. (See NOTE)

Are tire pressure and size correct and is tire wear within specifications?

Yes	▶	GO TO 6.
No	▶	Adjust tire pressure or replace tire(s). (See NOTE)

6	CHECK WHEEL BEARING	
Check wheel bearing axial end play. (See NOTE) **Is wheel bearing axial end play within specifications? Refer to "Front Wheel Bearing", *AX-4*, "Rear Wheel Bearing", *AX-22* .**		
Yes	▶	GO TO 7.
No	▶	Check wheel bearing. Refer to "Front Wheel Bearing", ***AX-4***, "Rear Wheel Bearing", ***AX-22*** .

7	CHECK SENSOR ROTOR	
Check sensor rotor for teeth damage. (See NOTE) **Is sensor rotor free from damage?**		
Yes	▶	Check ABS actuator and electric unit pin terminals for damage or the connection of ABS actuator and electric unit harness connector. Reconnect ABS actuator and electric unit harness connector. Then retest.
No	▶	Replace sensor rotor. (See NOTE)

ABS Actuator Solenoid Valve and Solenoid Valve Relay

DIAGNOSTIC PROCEDURE

=NIBR0120

Malfunction code No. 41, 45, 51, 55, 42, 46, 52, 56, 63

1	INSPECTION START
Solenoid valve relay inspection	
▶	GO TO 2.

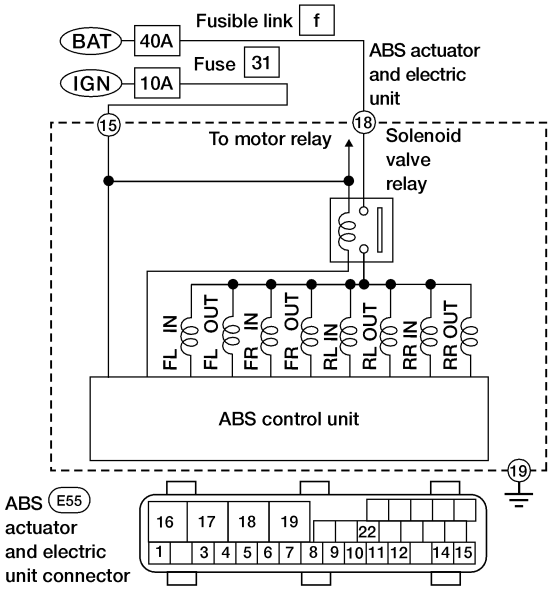

WBR051

2	CHECK FUSE
Check 40A fusible link f. For fuse layout, refer to “Schematic”, ***EL-9***.	
Is fusible link OK?	
Yes ▶	GO TO 3.
No ▶	GO TO 6.

3	CHECK CONNECTOR
1. Disconnect connector from ABS actuator and electric unit. Check terminals for damage or loose connection. Then reconnect connector. 2. Carry out self-diagnosis again.	
Does warning lamp activate again?	
Yes ▶	GO TO 4.
No ▶	**INSPECTION END**

4	CHECK ABS ACTUATOR AND ELECTRIC UNIT GROUND CIRCUIT
Refer to “ABS ACTUATOR AND ELECTRIC UNIT GROUND”, BR-58.	
Is ground circuit OK?	
Yes ▶	GO TO 5.
No ▶	Repair harness or connector.

5	CHECK SOLENOID VALVE POWER SUPPLY CIRCUIT

1. Disconnect ABS actuator and electric unit connector.
2. Check voltage between ABS actuator and electric unit connector E55 (body side) terminal 18 and ground.

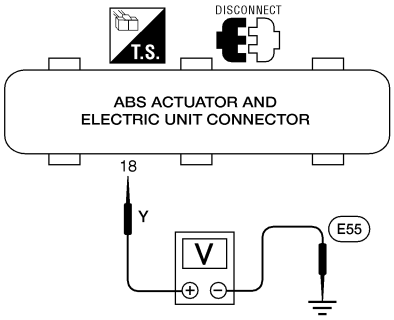

LBR052

Does battery voltage exist?

Yes	▶	Replace ABS actuator and electric unit.
No	▶	**Check the following.** If NG, repair harness or connectors. ● Harness connector E55 ● Harness for open or short between ABS actuator and electric unit and fusible link.

6	REPLACE FUSE

Replace 40A fusible link h. For fuse layout, refer to ***EL-9***, "Schematic".

Does the fusible link blow out when ignition switch is turned ON?

Yes	▶	GO TO 7.
No	▶	**INSPECTION END**

7	CHECK SOLENOID VALVE RELAY POWER SUPPLY CIRCUIT FOR SHORT

1. Disconnect battery cable and ABS actuator and electric unit connector.
2. Check continuity between ABS actuator and electric unit connector E55 (body side) terminal 18 and ground.

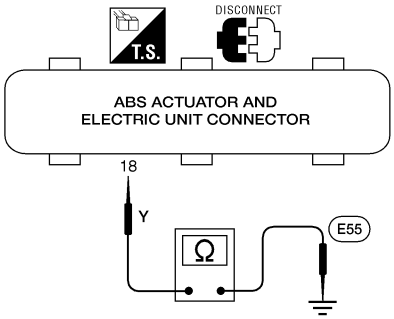

Continuity should exist

LBR053

Does continuity exist?

Yes	▶	**Check the following.** If NG, repair harness or connector. ● Harness connector E55 ● Harness for open or short between ABS actuator and electric unit and fusible link.
No	▶	Replace ABS actuator and electric unit.

Motor Relay or Motor

DIAGNOSTIC PROCEDURE

=NIBR0121

Malfunction code No. 61

1	INSPECTION START

ABS motor relay inspection

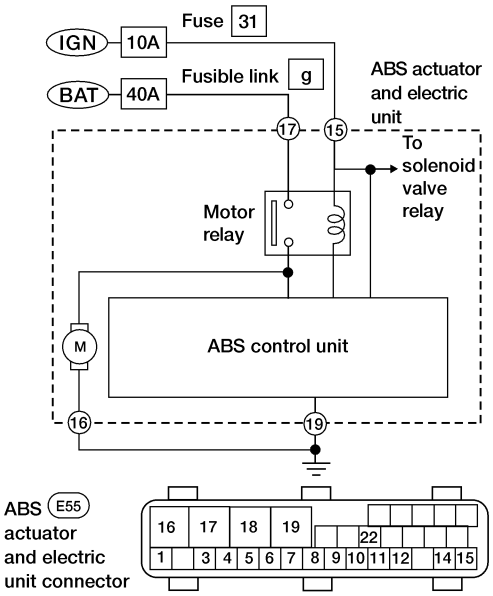

WBR054

▶	GO TO 2.

2	CHECK FUSIBLE LINK

Check 40A fusible link **g**. For fusible link layout, refer to “Schematic”, ***EL-9***.

Is fusible link OK?

Yes	▶	GO TO 3.
No	▶	GO TO 6.

3	CHECK CONNECTOR

1. Disconnect ABS actuator and electric unit connector. Check terminals for damage or loose connection. Then reconnect connector.
2. Carry out self-diagnosis again.

Does warning lamp activate again?

Yes	▶	GO TO 4.
No	▶	**INSPECTION END**

4	CHECK ABS ACTUATOR AND ELECTRIC UNIT GROUND CIRCUIT

Refer to “ABS ACTUATOR AND ELECTRIC UNIT GROUND”, BR-58.

Is ground circuit OK?

Yes	▶	GO TO 5.
No	▶	Repair harness or connector.

5	CHECK MOTOR RELAY POWER SUPPLY CIRCUIT

1. Disconnect ABS actuator and electric unit connector.
2. Check voltage between ABS actuator and electric unit connector E55 (body side) terminal 17 and ground.

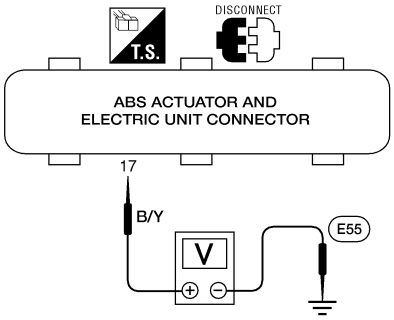

LBR055

Does battery voltage exist?

Yes	▶	Replace ABS actuator and electric unit.
No	▶	**Check the following.** If NG, repair harness or connector. ● Harness connector E55 ● Harness for open or short between ABS actuator and electric unit and fusible link

6	REPLACE FUSIBLE LINK

Replace 40A fusible link h. For fuse layout, refer to ***EL-9***, "Schematic."

Does the fusible link blow out when ignition switch is turned ON?

Yes	▶	GO TO 7.
No	▶	**INSPECTION END**

7	CHECK ABS ACTUATOR MOTOR POWER SUPPLY CIRCUIT FOR SHORT

1. Disconnect battery cable and ABS actuator and electric unit connector.
2. Check continuity between ABS actuator and electric unit connector E55 (body side) terminal 17 and ground.

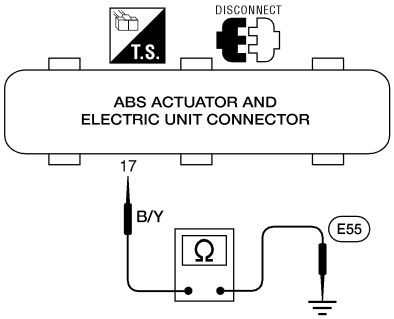

LBR056

Continuity should not exist.

Does continuity exist?

Yes	▶	**Check the following.** If NG, repair harness or connector. ● Harness connector E55 ● Harness for open or short between ABS actuator and electric unit and fusible link
No	▶	Replace ABS actuator and electric unit.

Low Voltage

DIAGNOSTIC PROCEDURE

NIBR0122

Malfunction code No. 57

1	INSPECTION START
ABS actuator and electric unit power supply and ground circuit inspection	

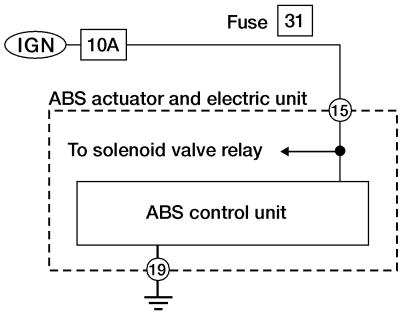

LBR057

▶	GO TO 2.

2	CHECK FUSE
Check 10A fuse No. 31. For fuse layout, refer to"Schematic", ***EL-9***.	
Is fuse OK?	
Yes ▶	GO TO 3.
No ▶	GO TO 6.

3	CHECK CONNECTOR
1. Disconnect ABS actuator and electric unit connector. Check terminals for damage or loose connections. Then reconnect connector. 2. Carry out self-diagnosis again.	
Does warning lamp activate again?	
Yes ▶	GO TO 4.
No ▶	**INSPECTION END**

4	CHECK ABS ACTUATOR AND ELECTRIC UNIT GROUND CIRCUIT
Refer to "ABS ACTUATOR AND ELECTRIC UNIT GROUND", BR-58.	
Is ground circuit OK?	
Yes ▶	GO TO 5.
No ▶	Repair harness or connector.

5	CHECK ABS ACTUATOR AND ELECTRIC UNIT POWER SUPPLY CIRCUIT

1. Disconnect ABS actuator and electric unit connector.
2. Check voltage between ABS actuator and electric unit connector E55 (body side) terminal 15 and ground.

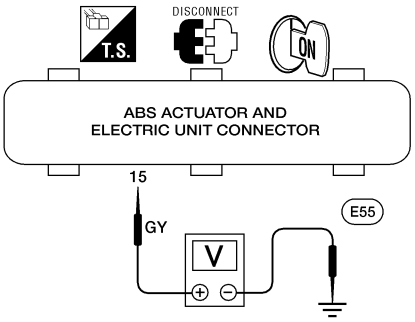

LBR058

Does battery voltage exist when ignition switch is turned ON?

Yes	▶	Replace ABS actuator and electric unit.
No	▶	**Check the following.** If NG, repair harness or connector. ● Harness connector E55 ● Harness for open or short between ABS actuator and electric unit and fuse

6	REPLACE FUSE

Replace 10A fuse 31. For fuse layout, refer to ***EL-9***, "Schematic".

Does the fuse blow out when ignition switch is turned ON?

Yes	▶	GO TO 7.
No	▶	**INSPECTION END**

7	CHECK ABS ACTUATOR AND ELECTRIC UNIT POWER SUPPLY CIRCUIT FOR SHORT

1. Disconnect battery cable and ABS actuator and electric unit connector.
2. Check continuity between ABS actuator and electric unit connector E55 (body side) terminal 15 and ground.

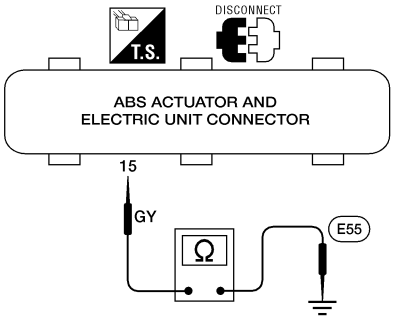

LBR059

Continuity should not exist.

Does continuity exist?

Yes	▶	**Check the following.** If NG, repair harness or connector. ● Harness connector E55 ● Harness for open or short between ABS actuator and electric unit and fuse
No	▶	Replace ABS actuator and electric unit.

Control Unit

DIAGNOSTIC PROCEDURE

=NIBR0123

Malfunction code No. 71

1	INSPECTION START
ABS actuator and electric unit power supply and ground circuit inspection	

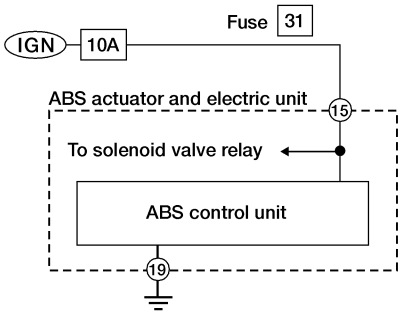

LBR057

▶	GO TO 2.

2	CHECK CONNECTOR
1. Disconnect ABS actuator and electric unit connector. Check terminals for damage or loose connection. Then reconnect connector. 2. Carry out self-diagnosis again.	
Does warning lamp activate again?	
Yes ▶	GO TO 3.
No ▶	**INSPECTION END**

3	CHECK ABS ACTUATOR AND ELECTRIC UNIT POWER SUPPLY CIRCUIT
Check voltage. Refer to “CHECK ABS ACTUATOR AND ELECTRIC UNIT POWER SUPPLY CIRCUIT”, BR-68.	
Does battery voltage exist when ignition switch is turned ON?	
Yes ▶	GO TO 4.
No ▶	Repair.

4	CHECK WARNING LAMP INDICATION
Does warning lamp indicate code No. 71 again?	
Yes or No	
Yes ▶	Replace ABS actuator and electric unit.
No ▶	Inspect the system according to the code No.

1. ABS Works Frequently

NIBR0124

1	CHECK BRAKE FLUID PRESSURE	
Check brake fluid pressure distribution. Refer to “Inspection”, BR-11.		
Is brake fluid pressure distribution normal?		
Yes	▶	GO TO 2.
No	▶	Repair. Then perform Preliminary Check. Refer to “Preliminary Check”, BR-55.

2	CHECK WHEEL SENSOR	
1. Check wheel sensor connector for terminal damage or loose connections. 2. Perform wheel sensor mechanical check. Refer to “CHECK SENSOR ROTOR”, BR-62.		
Is wheel sensor mechanism OK?		
Yes	▶	GO TO 3.
No	▶	Repair.

3	CHECK FRONT AXLE	
Check front axles for excessive looseness. Refer to “Front Wheel Bearing”, ***AX-4***.		
Is front axle installed properly?		
Yes	▶	Go to “CHECK WARNING LAMP INDICATION”, BR-71.
No	▶	Repair.

2. Unexpected Pedal Action

NIBR0125

1	CHECK BRAKE PEDAL STROKE	
Check brake pedal stroke.		
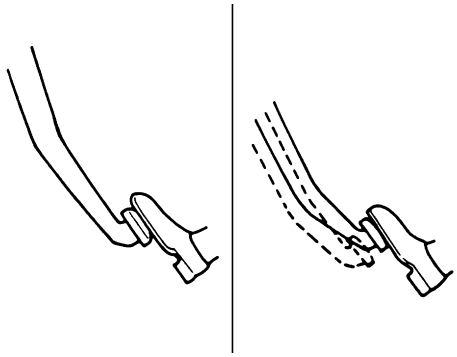 SBR540A		
Is brake pedal stroke excessively large?		
Yes	▶	Perform Preliminary Check. Refer to “Preliminary Check”, BR-55.
No	▶	GO TO 2.

2	CHECK MECHANICAL BRAKE SYSTEM PERFORMANCE	
Disconnect ABS actuator and electric unit connector and check whether brake is effective. **Does brake system function properly when brake pedal is depressed?**		
Yes	▶	GO TO 3.
No	▶	Perform Preliminary Check. Refer to "Preliminary Check", BR-55.

3	CHECK WARNING LAMP INDICATION	
Ensure warning lamp remains off while driving. 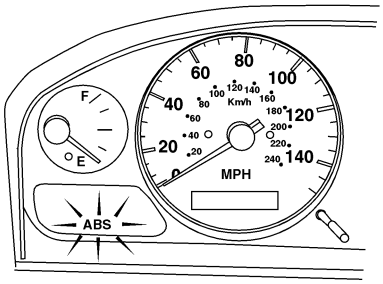 WBR039 **Is warning lamp turned off?**		
Yes	▶	GO TO 4.
No (with Consult-II)	▶	Carry out self-diagnosis. Refer to "SELF-DIAGNOSIS PROCEDURE", BR-49.
No (without Consult-II)	▶	Carry out self-diagnosis. Refer to "SELF-DIAGNOSIS PROCEDURE", BR-46.

4	CHECK WHEEL SENSOR	
1. Check wheel sensor connector for terminal damage or loose connection. 2. Perform wheel sensor mechanical check. Refer to "CHECK SENSOR ROTOR", BR-62. **Is wheel sensor mechanism OK?**		
Yes	▶	Check ABS actuator and electric unit pin terminals for damage or the connection of ABS actuator and electric unit harness connector. Reconnect ABS actuator and electric unit harness connector. Then retest.
No	▶	Repair.

3. Long Stopping Distance

NIBR0126

1	CHECK MECHANICAL BRAKE SYSTEM PERFORMANCE	
Disconnect ABS actuator and electric unit connector and check whether stopping distance is still long. **Does brake system function properly when brake pedal is depressed?**		
Yes	▶	Perform Preliminary Check and air bleeding (if necessary).
No	▶	Go to "CHECK WARNING LAMP INDICATION", BR-71.

NOTE:
Stopping distance may be longer for vehicles without ABS when road condition is slippery.

4. ABS Does Not Work

=NIBR0127

1	CHECK WARNING LAMP INDICATION	
Does the ABS warning lamp activate?		
	Yes or No	
Yes (with Consult-II)	▶	Carry out self-diagnosis. Refer to “SELF-DIAGNOSIS PROCEDURE”, BR-49.
Yes (without Consult-II)	▶	Carry out self-diagnosis. Refer to “SELF-DIAGNOSIS PROCEDURE”, BR-46.
No	▶	Go to “CHECK WARNING LAMP INDICATION”, BR-71.

NOTE:
ABS does not work when vehicle speed is under 10 km/h (6 MPH).

5. Pedal Vibration and Noise

NIBR0128

1	INSPECTION START	
Pedal vibration and noise inspection		
	▶	GO TO 2.

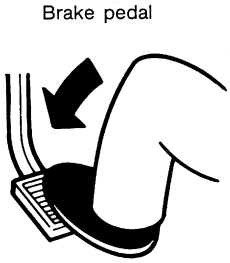

SAT797A

2	CHECK SYMPTOM	
1. Apply brake. 2. Start engine.		
	Does the symptom appear only when engine is started?	
Yes (with Consult-II)	▶	Carry out self-diagnosis. Refer to “SELF-DIAGNOSIS PROCEDURE”, BR-49.
Yes (without Consult-II)	▶	Carry out self-diagnosis. Refer to “SELF-DIAGNOSIS PROCEDURE”, BR-46.
No	▶	Go to “CHECK WARNING LAMP INDICATION”, BR-71.

NOTE:
ABS may operate and cause vibration under any of the following conditions.

- Applying brake gradually when shifting or operating clutch.
- Low friction (slippery) road.
- High speed cornering.
- Driving over bumps and pot holes.

- Engine speed is over 5,000 rpm with vehicle stopped.

6. Warning Lamp Does Not Come On When Ignition Switch Is Turned On

NIBR0129

1	INSPECTION START
Warning lamp circuit inspection	

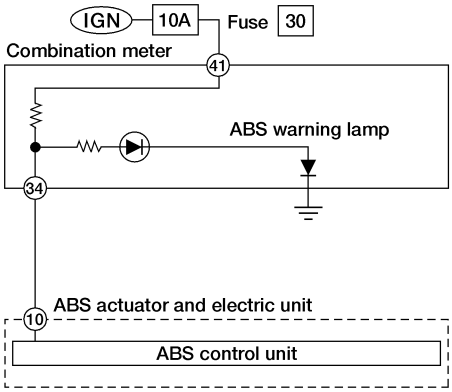

WBR060

▶	GO TO 2.

2	CHECK FUSE
Check 10A fuse No. 30. For fuse layout, refer to “Schematic”, ***EL-9***.	
Is fuse OK?	
Yes ▶	GO TO 3.
No ▶	Replace fuse.

3	CHECK WARNING LAMP ACTIVATE

Disconnect ABS actuator and electric unit connector.

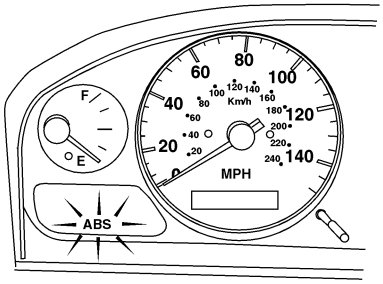

WBR039

Does the warning lamp activate?

Yes	▶	Replace ABS actuator and electric unit.
No	▶	GO TO 4.

4	CHECK HARNESS FOR SHORT

1. Disconnect ABS actuator and electric unit connector and combination meter connector M30.
2. Check continuity between ABS actuator and electric unit connector E55 (body side) terminal 10 and ground.

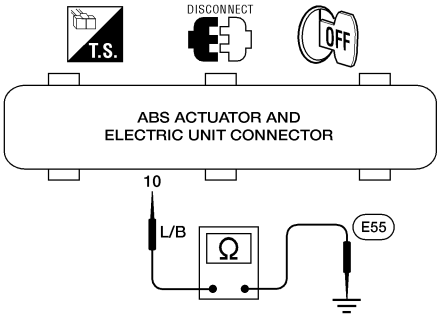

Continuity should not exist

LBR061

Does continuity exist?

Yes	▶	Repair harness or connectors.
No	▶	**Check combination meter.** Refer to ***EL-106***, "WARNING LAMPS," "WITH TACHOMETER".

7. Warning Lamp Stays On When Ignition Switch Is Turned On

=NIBR0130

1	INSPECTION START
ABS control unit inspection.	

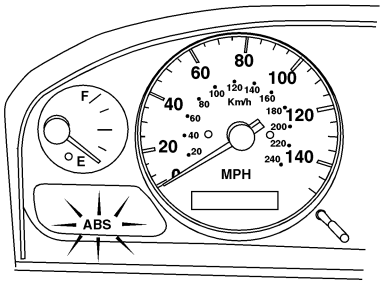

WBR039

	▶	GO TO 2.

2	CHECK FUSE	
Check 10A fuse No. 31. For fuse layout, refer to “Schematic”, ***EL-9***.		
Is fuse OK?		
Yes	▶	GO TO 3.
No	▶	GO TO 8.

3	CHECK HARNESS CONNECTOR	
Check ABS actuator and electric unit pin terminals for damage or bad connection of ABS actuator and electric unit harness connector. Reconnect ABS actuator and electric unit harness connector. Then retest.		
Does warning lamp stay on when ignition switch is turned ON?		
Yes	▶	GO TO 4.
No	▶	**INSPECTION END**

4	CHECK ABS ACTUATOR AND ELECTRIC UNIT GROUND CIRCUIT	
Refer to “ABS ACTUATOR AND ELECTRIC UNIT GROUND”, BR-58.		
Is ground circuit OK?		
Yes	▶	GO TO 5.
No	▶	Repair harness or connector.

5	CHECK ABS ACTUATOR AND ELECTRIC UNIT POWER SUPPLY CIRCUIT

1. Disconnect ABS actuator and electric unit connector.
2. Check voltage between ABS actuator and electric unit connector E55 (body side) terminal 15 and ground.

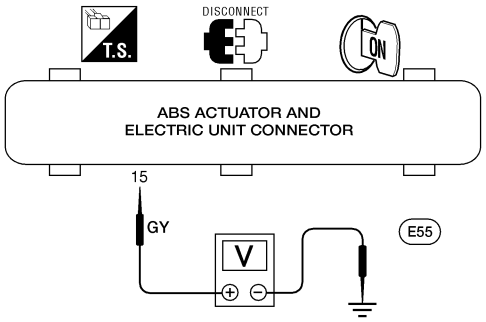

LBR063

Does battery voltage exist when ignition switch is turned ON?

Yes	▶	GO TO 6.
No	▶	**Check the following.** If NG, repair harness or connector. ● Harness connector E55 ● Harness for open or short between ABS actuator and electric unit and fuse

6	CHECK WARNING LAMP

1. Disconnect ABS actuator and electric unit connector.
2. Connect suitable wire between ABS actuator and electric unit connector E55 (body side) terminal 10 and ground.

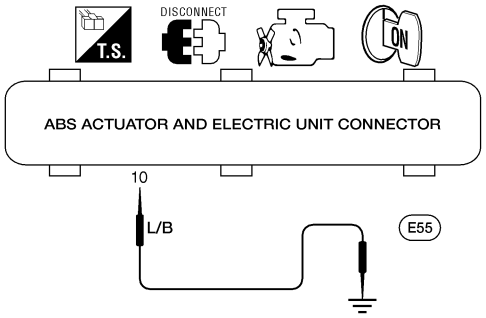

LBR064

Does the warning lamp deactivate?

Yes	▶	Replace ABS actuator and electric unit.
No	▶	GO TO 7.

7	CHECK ABS WARNING LAMP CONTROL CIRCUIT FOR OPEN

1. Disconnect combination meter connector M30.
2. Check continuity between combination meter connector M30 (body side) terminal 34 (with Tachometer), 38 (without Tachometer) and ABS actuator and electric unit connector E55 (body side) terminal 10.
   NOTE:
   Connect positive lead of multimeter to combination meter connector M30 (body side) terminal 34 (with Tachometer), 38 (without Tachometer) and negative lead to ABS actuator and electric unit connector E55 (body side) terminal 10.

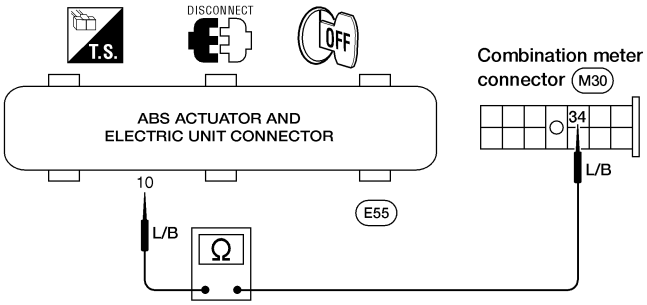

LBR065

Continuity should exist.

Does continuity exist?

Yes	▶	**Check combination meter.** Refer to ***EL-106***, "WARNING LAMPS", "WITH TACHOMETER".
No	▶	GO TO 8.

8	REPLACE FUSE

Replace fuse.

Does the fuse blow out when ignition switch is turned ON?

Yes	▶	GO TO 9.
No	▶	**INSPECTION END**

9	CHECK ABS ACTUATOR AND ELECTRIC UNIT POWER SUPPLY CIRCUIT FOR SHORT

1. Disconnect battery cable and ABS actuator and electric unit connector.
2. Check continuity between ABS actuator and electric unit connector E55 (body side) terminal 15 and ground.

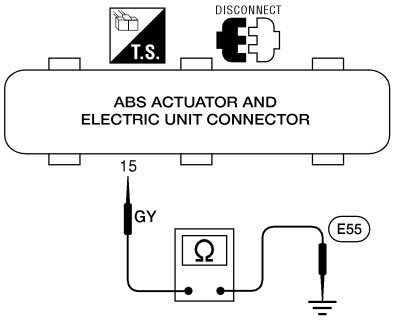

LBR066

Continuity should not exist.

Does continuity exist?

Yes	▶	**Check the following.** If NG, repair harness or connector. ● Harness connector E55 ● Harness for open or short between ABS actuator and electric unit and fuse
No	▶	Replace ABS actuator and electric unit.

REMOVAL AND INSTALLATION

CAUTION:
Be careful not to damage sensor edge and sensor rotor teeth. When removing the front or rear wheel hub assembly, disconnect the ABS wheel sensor from the assembly and move it away.

Front Wheel Sensor

NIBR0131S01

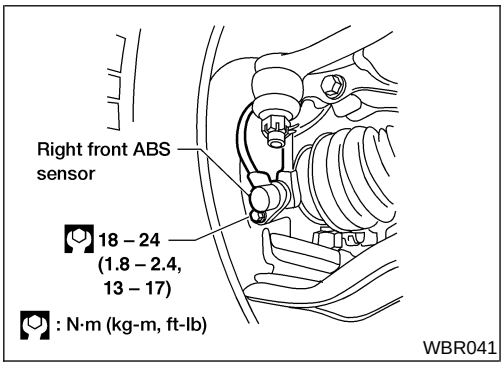

Rear Wheel Sensor

NIBR0131S02

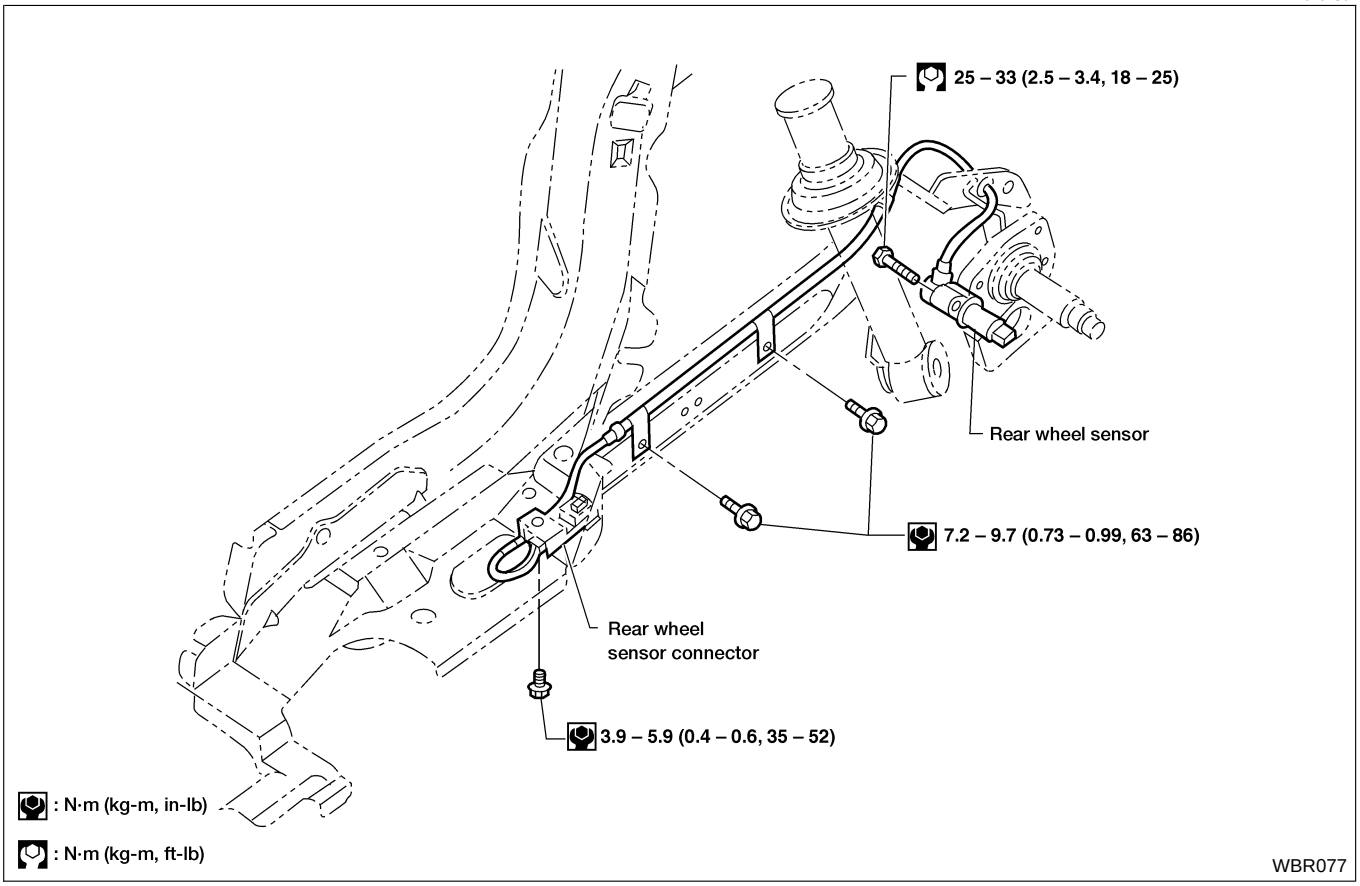

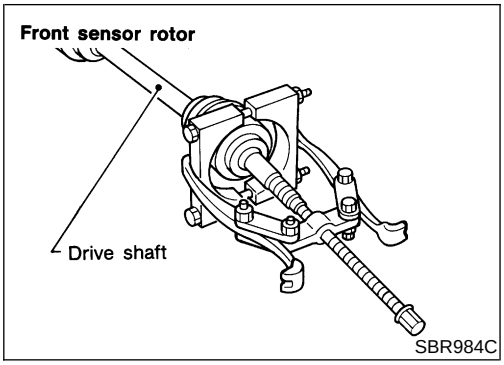

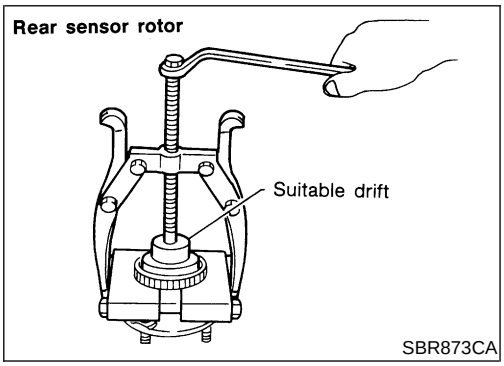

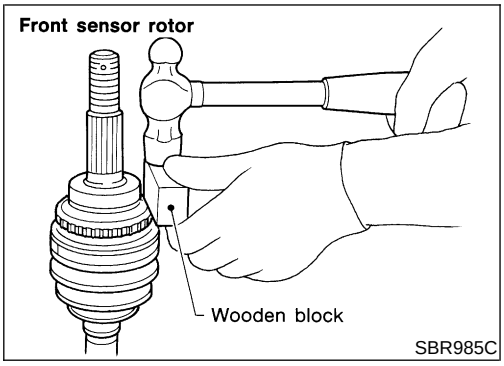

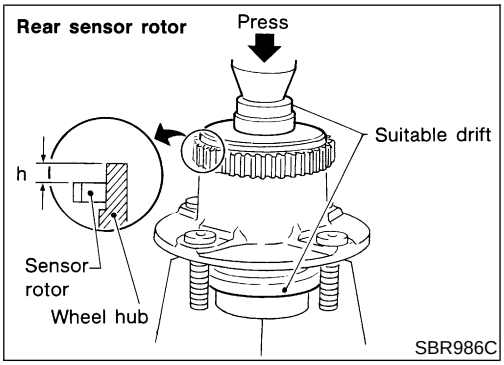

Sensor Rotor

NIBR0131S03

REMOVAL

NIBR0131S0301

1. Remove the drive shaft or rear wheel hub. Refer to “Removal”, ***AX-12*** or “Removal”, ***AX-23*** respectively.
2. Remove the sensor rotor using suitable puller, drift and bearing replacer.

INSTALLATION

NIBR0131S0302

Install the sensor rotor. For front sensor rotor, use hammer and wooden block. For rear sensor rotor, use suitable drift and press.

- Always replace sensor rotor with new one.

- Pay attention to the dimension of rear sensor rotor as shown in figure.

  Rear Disc

  h: 1.5 - 2.5 mm (0.06 - 0.10 in)

  Rear Drum

  h: 17.7 - 18.7 mm (0.70 - 0.74 in)

Actuator

NIBR0131S04

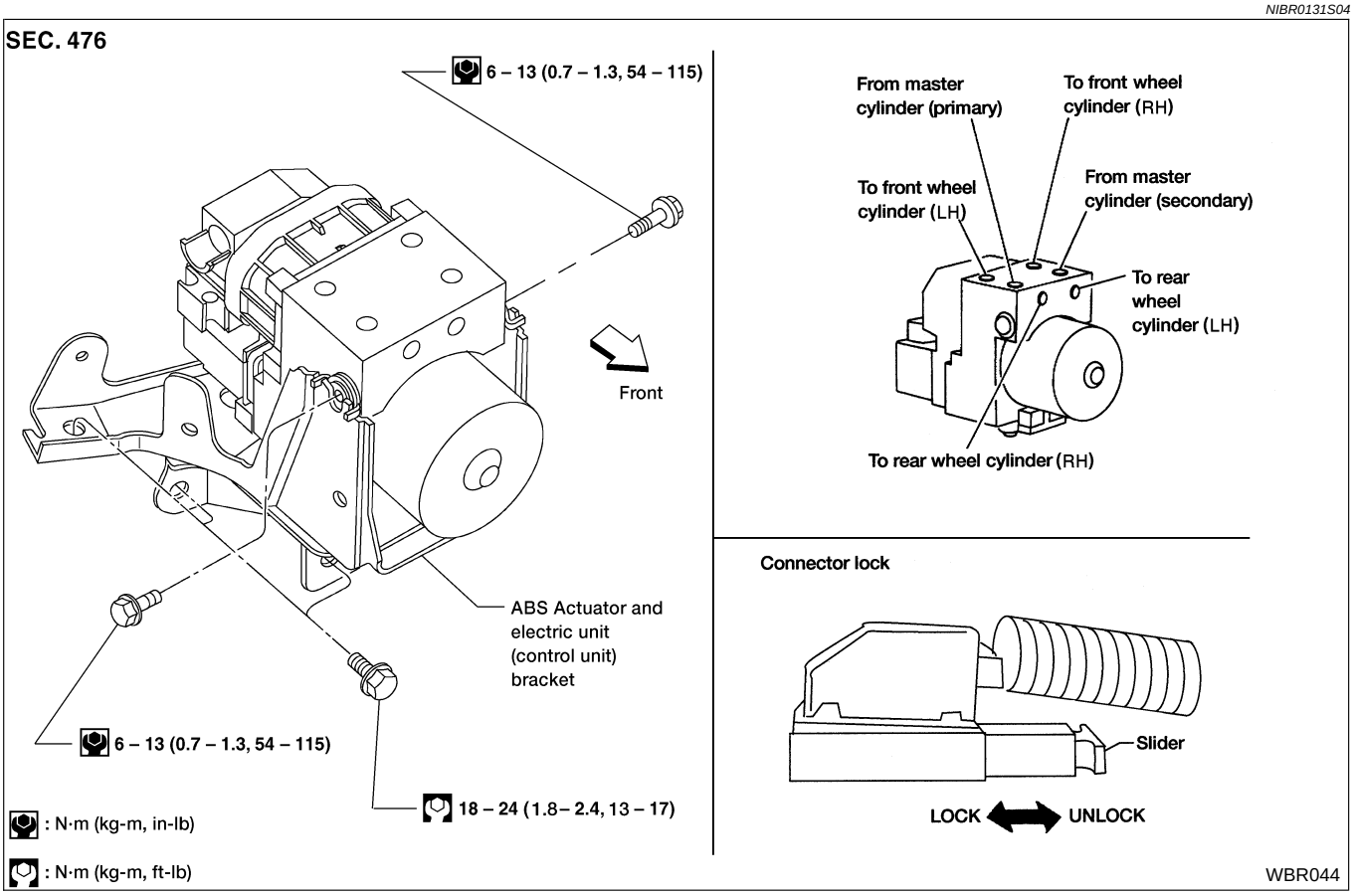

REMOVAL

NIBR0131S0401

1. Disconnect negative battery cable.
2. Drain brake fluid. Refer to “Changing Brake Fluid”, BR-7.
3. Remove the A/C high pressure and A/C low pressure lines. Refer to ***HA-75***, “Removal and Installation”.
4. Remove mounting bracket bolts and nuts.
5. Disconnect harness connector and brake lines.

INSTALLATION

NIBR0131S0402

1. Connect brake lines temporarily.
2. Tighten bolts.
3. Tighten brake lines.
4. Connect harness connector and negative battery cable.
5. Refill and bleed the brake fluid. Then bleed air. Refer to “Bleeding Brake System”, BR-8.
6. Install the A/C high pressure and A/C low pressure lines. Evacuate and recharge the A/C system. Refer to ***HA-61***, “Evacuating System and Charging Refrigerant”.

General Specifications

NIBR0077
Unit: mm (in)

Applied Model		QG18DE	SR20DE
Front brake	Brake model	CL25VA	CL25VB
	Cylinder bore diameter	57.2 (2.252)	
	Pad length × width × thickness	125.6 × 46.0 × 11.0 (4.94 × 1.811 × 0.433)	
	Rotor outer diameter × thickness	257 × 22 (10.12 × 0.87)	280 × 22 (11.02 × 0.87)
Rear brake	Brake model	LT20G	CL9HC
	Cylinder bore diameter/caliper bore diameter	17.45 (11/16)	33.96 (1.3370)
	Lining length × width × thickness	219.4 × 35 × 4.5 (8.64 × 1.38 × 0.177)	89.1 × 39.5 × 10 (3.508 × 1.555 × 0.39)
	Drum inner diameter/Disc diameter × thickness	203.2 (8)	258 × 9 (10.16 × 0.35)
Master cylinder	Cylinder bore diameter	23.81 (15/16)	
Control valve	Valve model	Dual proportioning valve	
	Split point [kPa (kg/cm^2, psi)] × reducing ratio	1,961 (20,284) × 0.2	2,942 (30,427) × 0.2
Brake booster	Booster model	M215T	
	Diaphragm diameter	Primary: 230 (9.06) Secondary: 205 (8.07)	
Brake fluid	Recommended brake fluid	DOT 3	

Disc Brake

NIBR0078
Unit: mm (in)

Brake model	CL25VA/CL25VB (Front)	CL9HC (Rear)
Pad wear limit Minimum thickness	2.0 (0.079)	2.0 (0.079)
Rotor repair limit Minimum thickness	20.0 (0.787)	8.0 (0.315)

Drum Brake

NIBR0132
Unit: mm (in)

Brake model		LT20G
Lining wear limit	Minimum thickness	1.5 (0.059)
Drum repair limit	Maximum inner diameter	204.5 (8.05)
	Maximum out-of round	0.03 (0.0012)

Brake Pedal

NIBR0079
Unit: mm (in)

Free height “H”*	M/T	156 - 166 (6.14 - 6.54)
	A/T	164.9 - 174.9 (6.49 - 6.89)
Depressed height ″D″ [under force of 490 N (50 kg, 110 lb) with engine running]		90 (3.54)
Pedal free play ″A″		1.0 - 3.0 (0.039 - 0.118)

*: Measured from surface of dash reinforcement panel.

Parking Brake

NIBR0080

Type	Lever
Number of notches [under force of 196 N (20 kg, 44 lb)]	6 - 7
Number of notches when warning lamp comes on	1

NOTES