REAR AXLE & REAR SUSPENSION

SECTION RA

CONTENTS

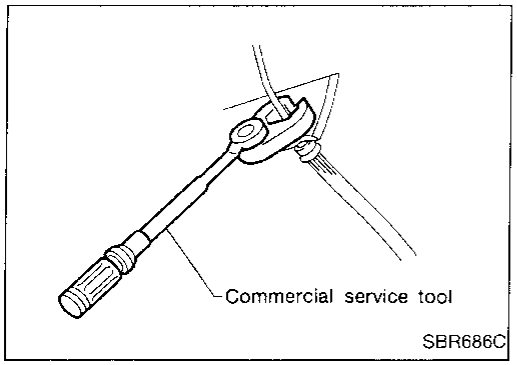

Precautions

- **When installing rubber parts, final tightening must be carried out under unladen condition* with tires on ground.**
  ***: Fuel, radiator coolant and engine oil full. Spare tire, jack, hand tools and mats in designated positions.**
- **Use flare nut wrench when removing or installing brake tubes.**
- **After installing removed suspension parts, check wheel alignment and adjust if necessary.**
- **Always torque brake lines when installing.**

Special Service Tools

The actual shapes of Kent-Moore tools may differ from those of special service tools illustrated here.

Tool number (Kent-Moore No.) Tool name	Description	
KV40101000 (J25604-01) Axle stand	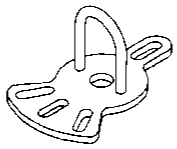 NT159	Removing rear axle shaft
ST36230000 (J25840-A) Sliding hammer	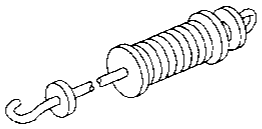 NT126	Removing rear axle shaft
ST38020000 (—) Bearing lock nut wrench	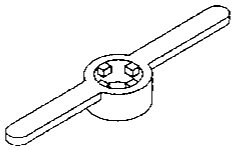 NT160	Removing wheel bearing lock nut
HT72480000 (J25852-B) Rear axle shaft bearing puller	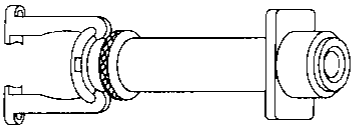 NT161	Removing wheel bearing
ST37840000 (—) Rear axle shaft guide	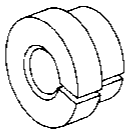 NT162	Installing rear axle shaft

Commercial Service Tools

Tool name	Description	
① Flare nut crowfoot ② Torque wrench	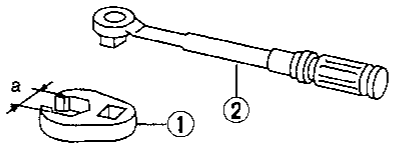 NT360	Removing and installing each brake piping **a: 10 mm (0.39 in)**
Rear axle oil seal drift	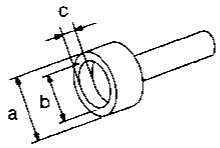 NT163	Installing oil seal **a: 74 mm (2.91 in) dia.** **b: 68 mm (2.68 in) dia.** **c: 10 mm (0.39 in)**

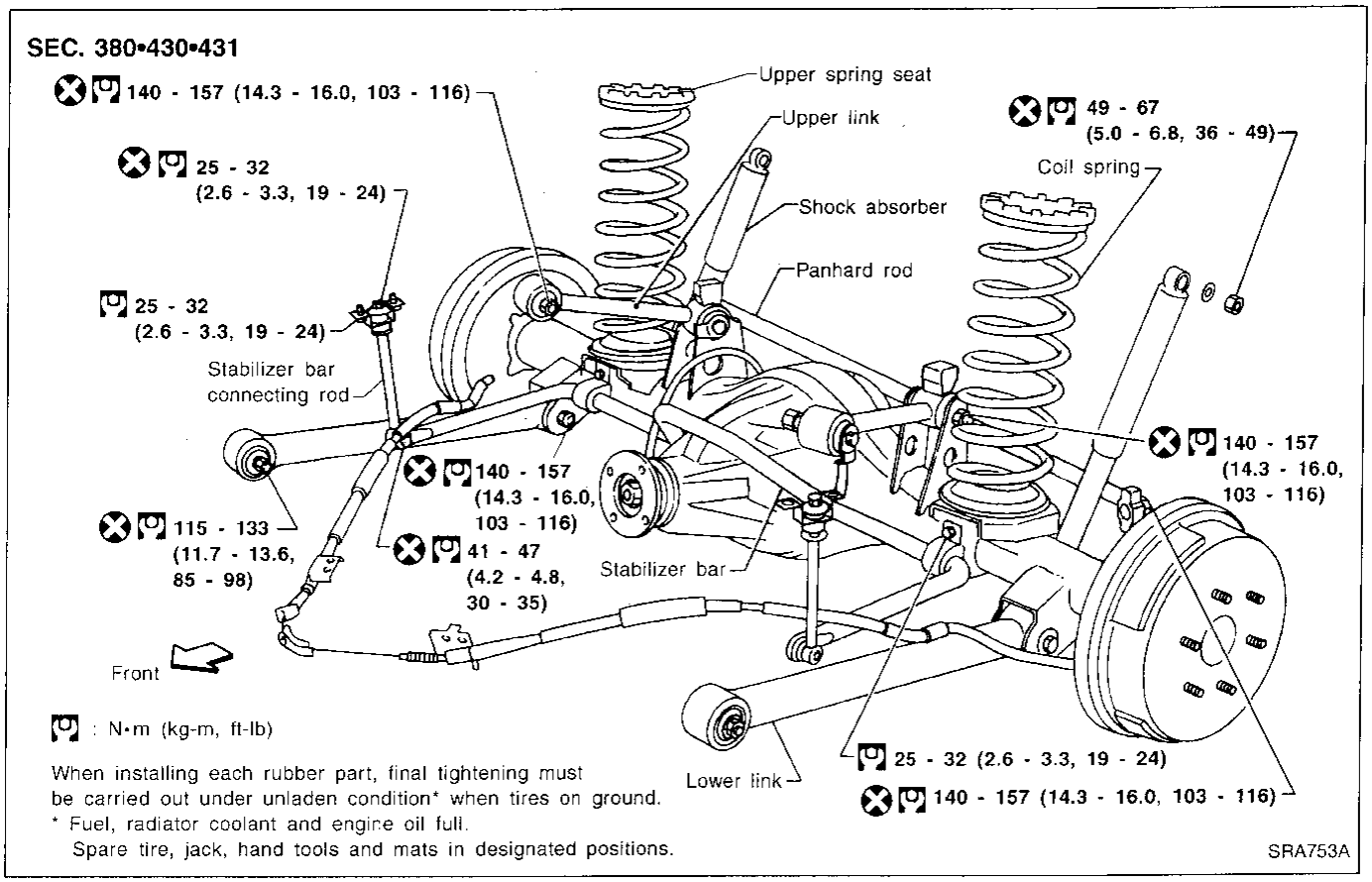
SEC. 380•430•431
140 - 157 (14.3 - 16.0, 103 - 116)
25 - 32 (2.6 - 3.3, 19 - 24)
25 - 32 (2.6 - 3.3, 19 - 24)
Stabilizer bar connecting rod
115 - 133 (11.7 - 13.6, 85 - 98)
140 - 157 (14.3 - 16.0, 103 - 116)
41 - 47 (4.2 - 4.8, 30 - 35)
Front
Upper spring seat
Upper link
Shock absorber
Panhard rod
Stabilizer bar
Lower link
49 - 67 (5.0 - 6.8, 36 - 49)
Coil spring
140 - 157 (14.3 - 16.0, 103 - 116)
25 - 32 (2.6 - 3.3, 19 - 24)
140 - 157 (14.3 - 16.0, 103 - 116)
: N•m (kg-m, ft-lb)
When installing each rubber part, final tightening must be carried out under unladen condition* when tires on ground.
* Fuel, radiator coolant and engine oil full.
Spare tire, jack, hand tools and mats in designated positions.
SRA753A

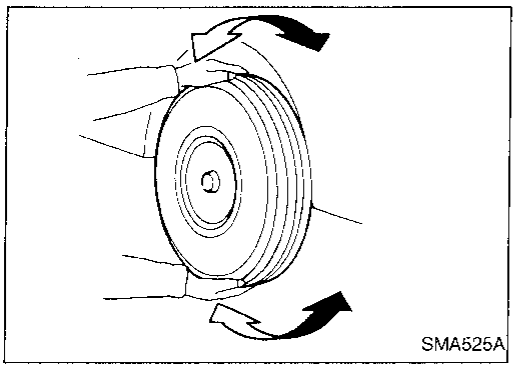

Rear Axle and Rear Suspension Parts

Check rear axle and rear suspension parts for excessive play, wear or damage.

- Shake each rear wheel to check for excessive play.
- Retighten all nuts and bolts to the specified torque.
  Tightening torque: Refer to REAR SUSPENSION, RA-10.

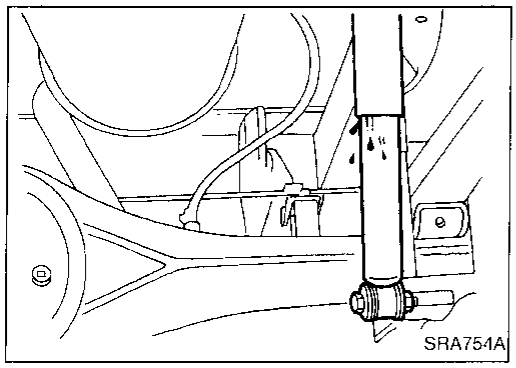

- Check shock absorber for oil leakage or other damage.
- Check shock absorber bushing for excessive wear or other damage.
- Check wheelarch height. Refer to FA section ("Front Axle and Front Suspension Parts", "ON-VEHICLE SERVICE").

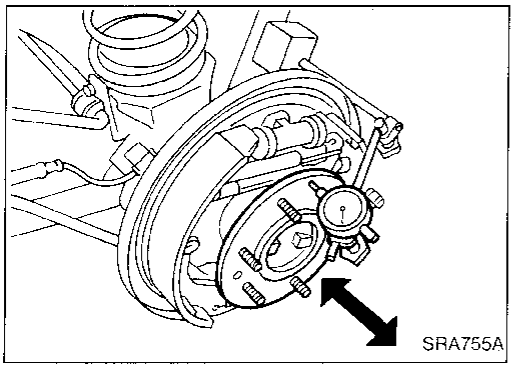

Rear Wheel Bearing

- Check that wheel bearings operate smoothly.
- Check axial end play.
  Axial end play:
  0 mm (0 in)

Components

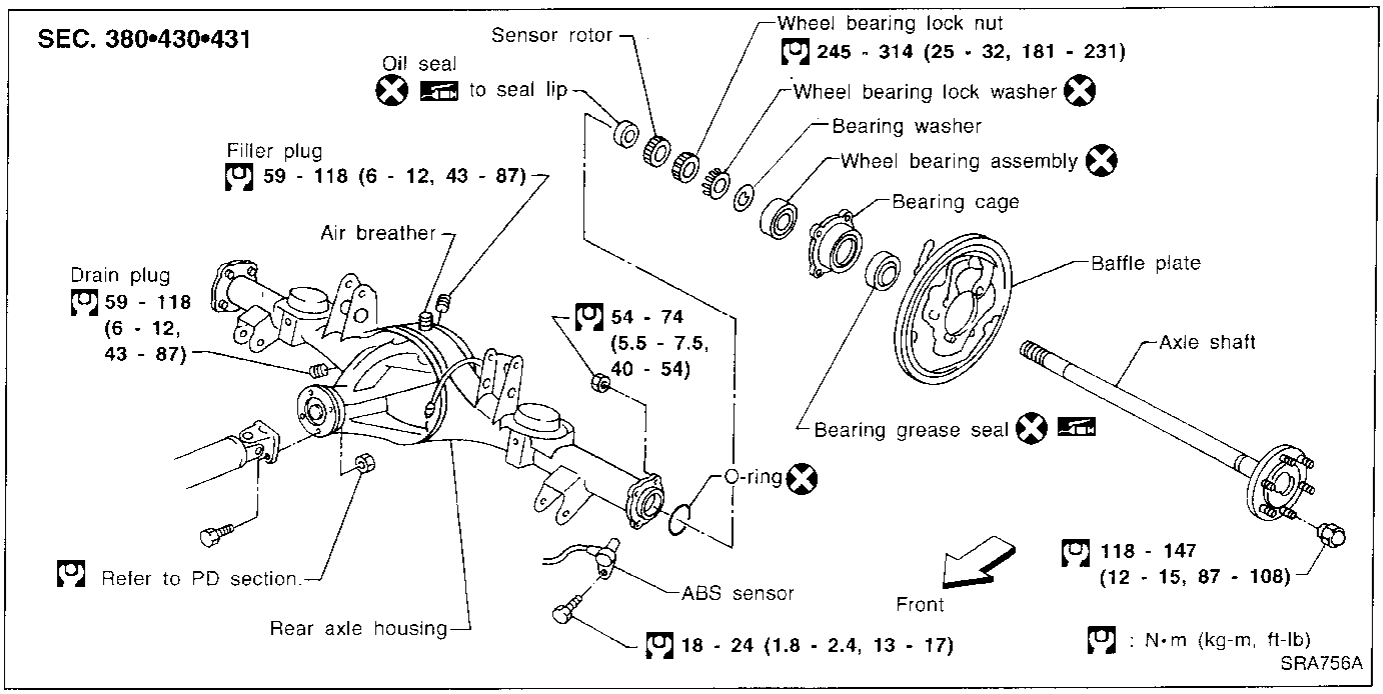

Removal

CAUTION:

- **Before removing the rear axle, disconnect the ABS wheel sensor from the assembly. Then move it away from the axle. Failure to do so may result in damage to the sensor wires and the sensor becoming inoperative.**
- **Wheel bearing does not require maintenance.**
- If growling noise is emitted from wheel bearing during operation, replace wheel bearing assembly.
- If the wheel bearing assembly is removed, it must be renewed. The old assembly must not be re-used.

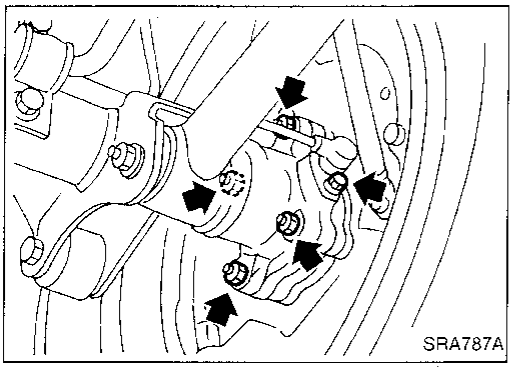

1. Disconnect parking brake cable and brake tube.
2. Remove nuts securing wheel bearing cage with baffle plate.

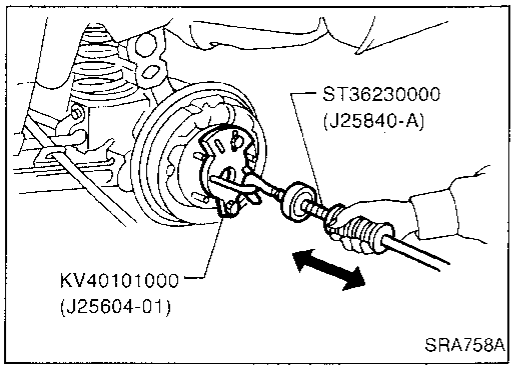

3. Draw out axle shaft with Tool.

When drawing out axle shaft, be careful not to damage oil seal.

Removal (Cont'd)

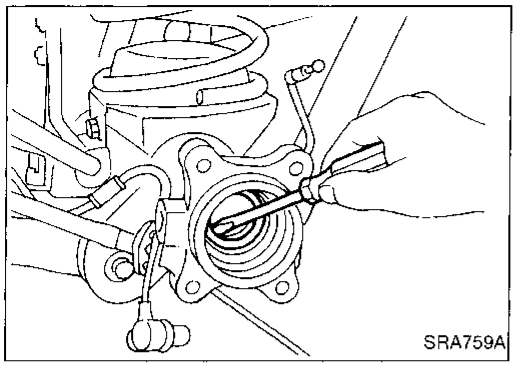

4. Remove oil seal with a screwdriver.

Do not reuse oil seal once it is removed. Always install new one.

5. Remove ABS sensor rotor.

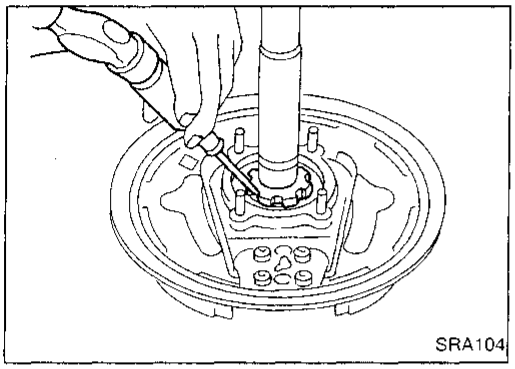

6. Unbend lock washer with a screwdriver.

Do not reuse lock washer once removed. Always install new one.

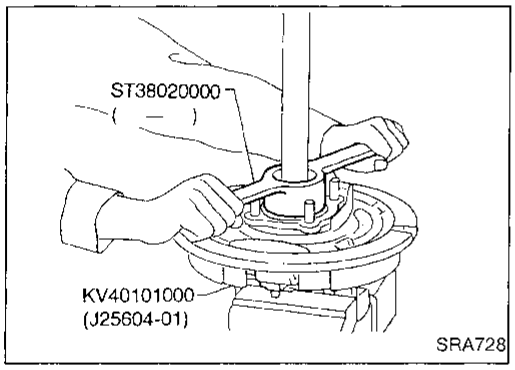

7. Remove bearing lock nut with Tool.

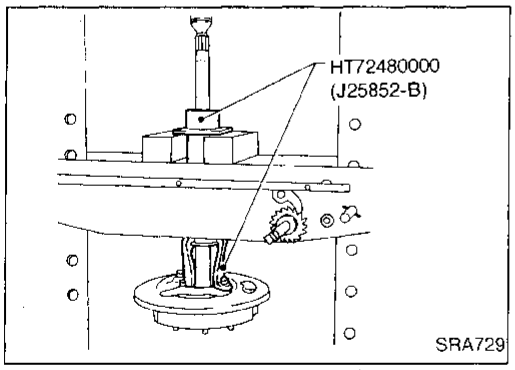

8. Remove wheel bearing together with bearing cage and baffle plate from axle shaft.

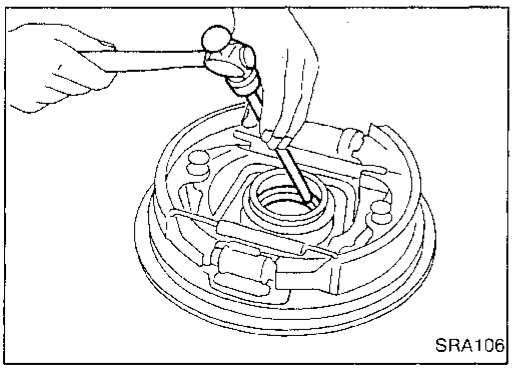

9. Remove grease seal with a screwdriver.
10. Remove wheel bearing assembly with a brass drift.

Inspection

AXLE SHAFT

Check axle shaft for straightness, cracks, damage, wear or distortion. Replace if necessary.

BEARING CAGE

Check bearing cage for deformation or cracks. Replace if necessary.

REAR AXLE HOUSING

Check rear axle housing for yield, deformation or cracks. Replace if necessary.

Installation

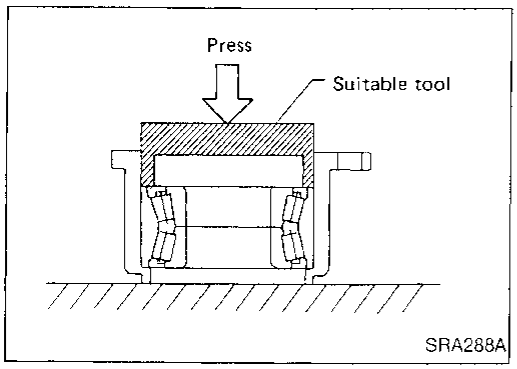

1. Press new wheel bearing until it bottoms end face of bearing cage.
   Maximum load P:
   39 kN (4 ton, 4.4 US ton, 3.9 Imp ton)

Always press outer race of wheel bearing during installation.

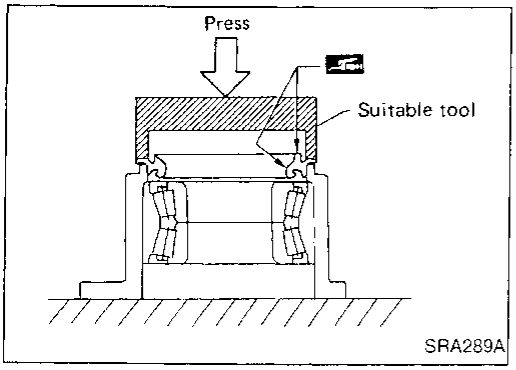

2. Press new grease seal until it bottoms end face of bearing cage.

After installing new grease seal, coat sealing lip with multi-purpose grease.

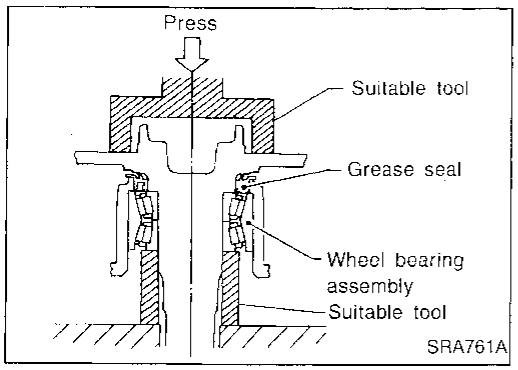

3. Press axle shaft into inner race of wheel bearing.
   Maximum load P:
   47.1 kN (4.8 ton, 5.3 US ton, 4.72 Imp ton)

Be careful not to damage or deform grease seal.

Installation (Cont'd)

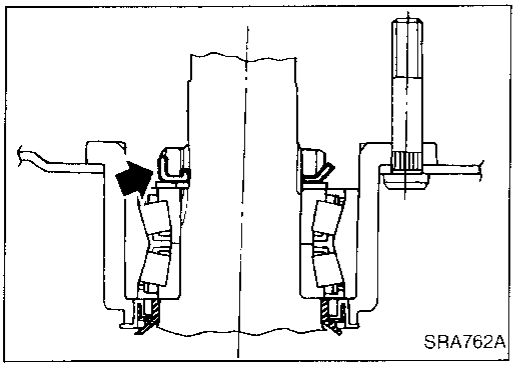

4. Install plain washer and a new wheel bearing lock washer.
5. Tighten wheel bearing lock nut to specified torque.
   : 245 - 314 N·m (25 - 32 kg-m, 181 - 231 ft-lb)

Fit wheel bearing lock washer lip in wheel bearing lock nut groove correctly by tightening lock nut. Be sure to bend it up.

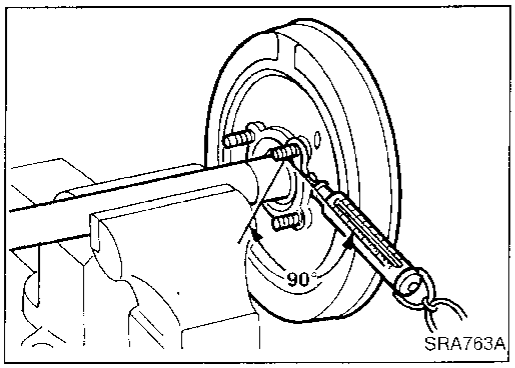

6. Check wheel bearing preload.
a. Turn bearing cage (with respect to axle shaft) two or three times. It must turn smoothly.
b. Attach spring gauge to bearing cage bolt (as shown at left) and pull it at a speed of 10 rpm to measure preload.
   Spring gauge indication:
   6.9 - 48.1 N (0.7 - 4.9 kg, 1.5 - 10.8 lb)

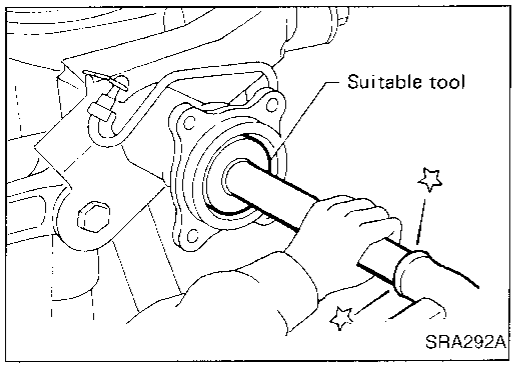

7. Install new oil seal to rear axle housing using a suitable tool.

After installing new oil seal, coat sealing lip with multi-purpose grease.

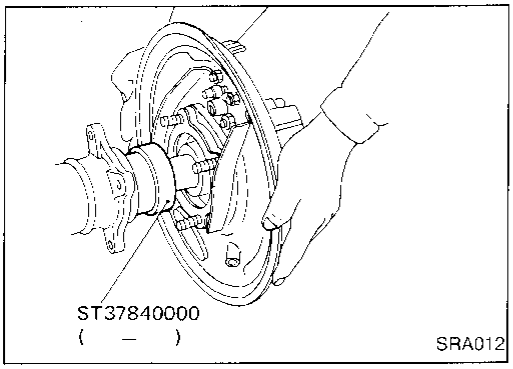

8. Press ABS sensor rotor onto axle shaft until it contacts wheel bearing lock nut.
9. Position axle shafts in rear axle housing with Tool as a guide.

Be careful not to damage oil seal.

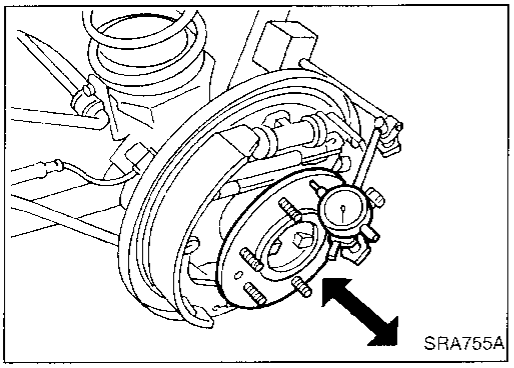

10. Check axial end play.
a. Check that wheel bearings operate smoothly.
b. Check axial end play.
   Axial end play:
   0 mm (0 in)

SEC. 380•430•431

When installing rubber parts, final tightening must be carried out under unladen condition* with tires on ground.

*** Fuel, radiator coolant and engine oil full. Spare tire, jack, hand tools and mats in designated positions.**

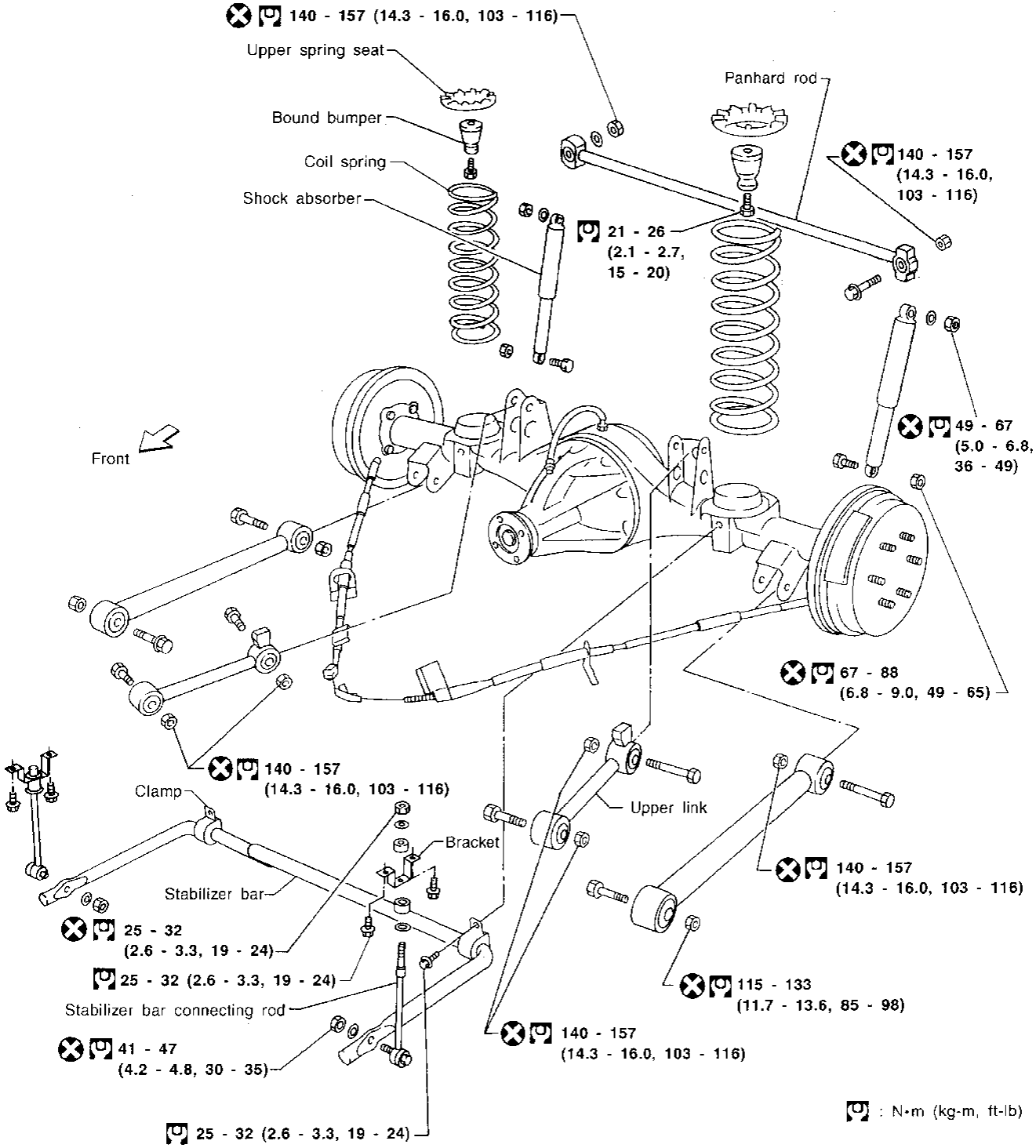

SRA765A

Removal and Installation

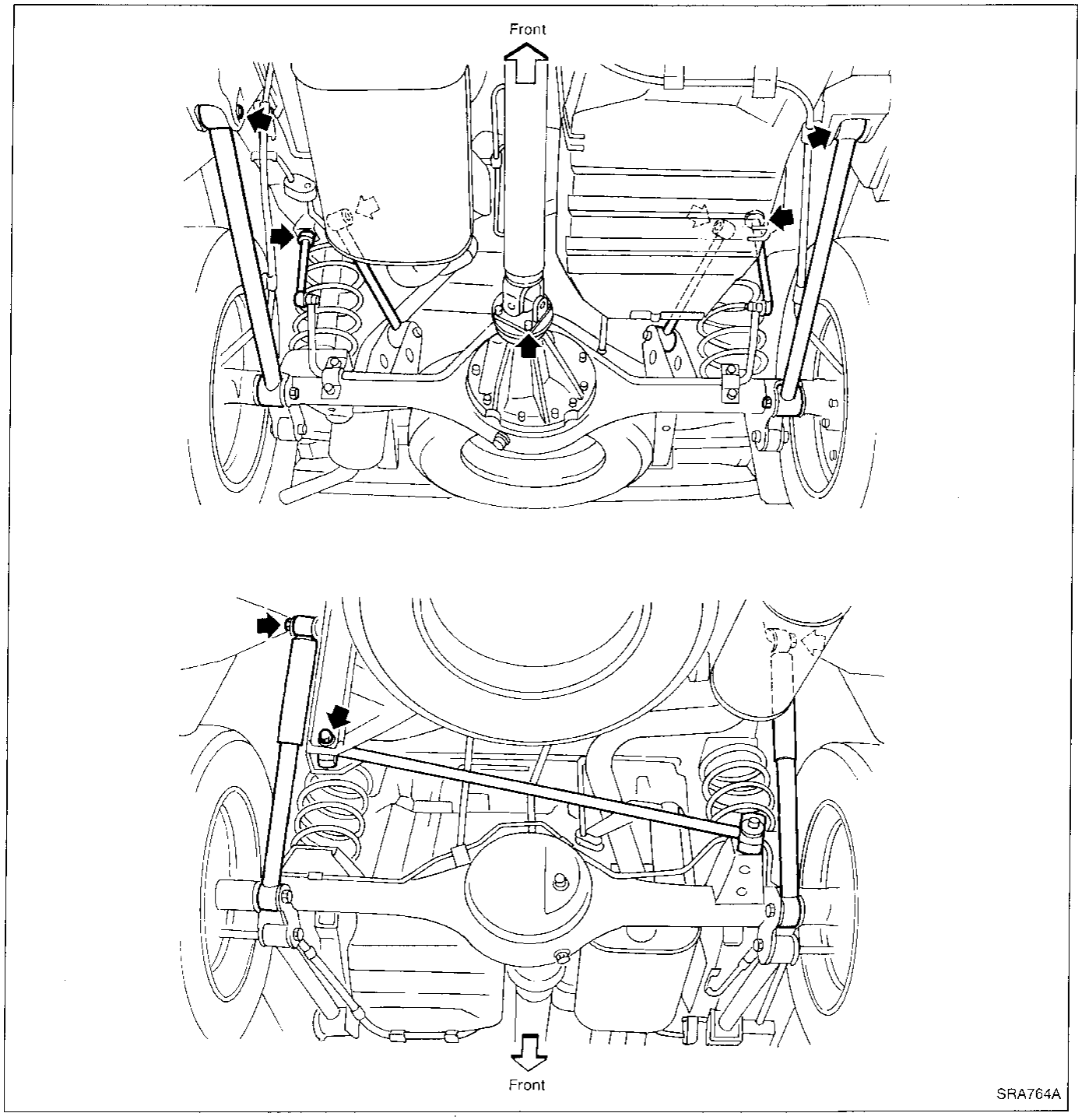

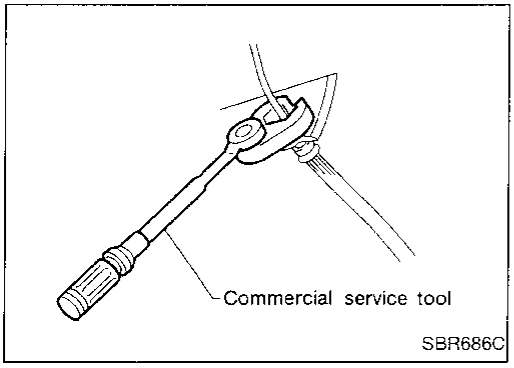

- Support axle and suspension components with a suitable jack and block.
- Disconnect brake hydraulic line and parking brake cables at back plates.

CAUTION:

- **Use flare nut wrench when removing or installing brake tubes.**
- **Before removing the rear suspension assembly, disconnect the ABS wheel sensor from the assembly. Then move it away from the rear suspension assembly. Failure to do so may result in damage to the sensor wires and the sensor becoming inoperative.**

Removal and Installation (Cont'd)

- Remove stabilizer bar from body.
- Remove upper links and lower links from body.
- Remove panhard rod from body.
- Disconnect rear end of propeller shaft. Refer to PD section.
- Remove upper end nuts of shock absorber.

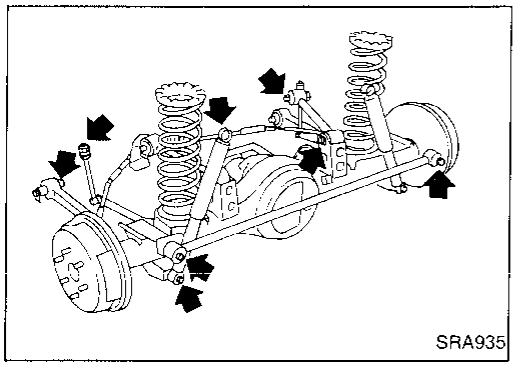

Final tightening for rubber parts requires to be carried out under unladen condition with tires on ground.

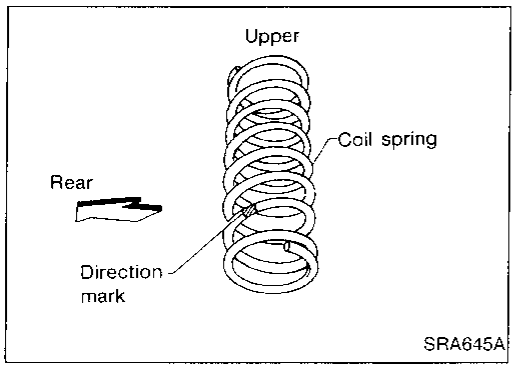

Coil Spring and Shock Absorber

REMOVAL AND INSTALLATION

Refer to "Removal and Installation", "REAR SUSPENSION", RA-11.

When installing coil spring, pay attention to its direction.
Be sure spring rubber seat is not twisted and has not slipped off when installing coil spring.

INSPECTION

- Check coil spring for yield, deformation or cracks.
- Check shock absorber for oil leakage, cracks or deformation.
- Check all rubber parts for wear, cracks or deformation. Replace if necessary.

Upper Link, Lower Link and Panhard Rod

INSPECTION

Check for cracks, distortion or other damage. Replace if necessary.

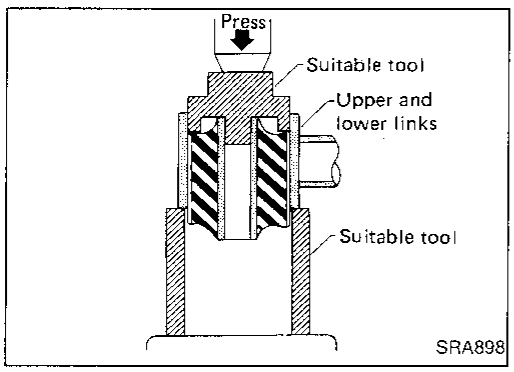

BUSHING REPLACEMENT

Check for cracks or other damage. Replace with suitable tool if necessary.

- Remove bushing with suitable tool.

Upper Link, Lower Link and Panhard Rod (Cont'd)

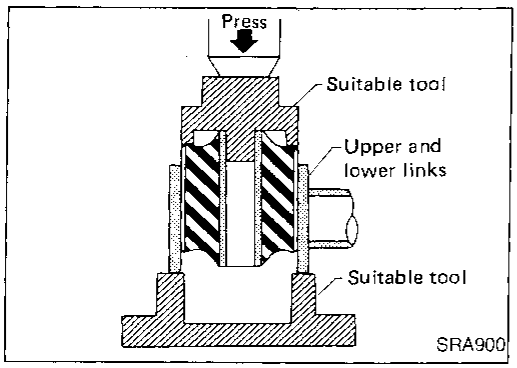

When installing bushing, apply a coat of 1% soapy water to outer wall of bushing.
Always install new bushing.
Do not tap end face of bushing directly with a hammer.

INSTALLATION

When installing each link, pay attention to direction of nuts and bolts.
When installing each rubber part, final tightening must be carried out under unladen condition with tires on ground.

Stabilizer Bar

REMOVAL AND INSTALLATION

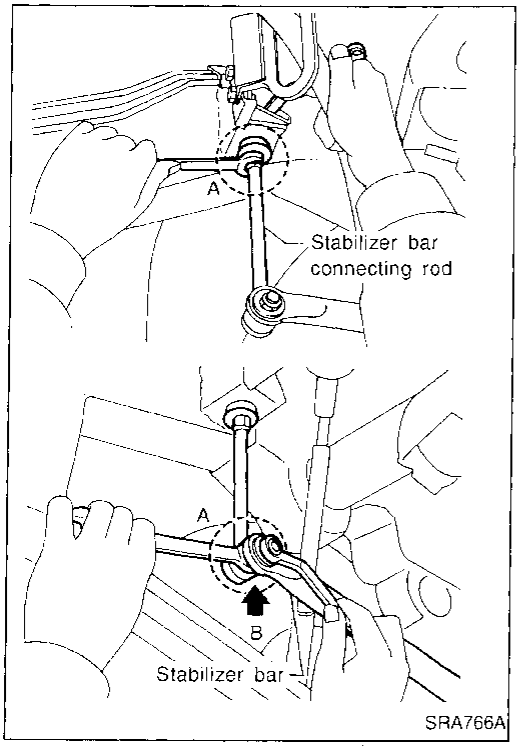

- When removing and installing stabilizer bar, fix portion A.

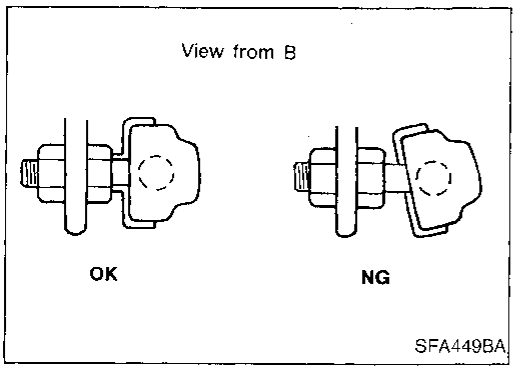

- Install stabilizer bar with ball joint socket properly placed.

General Specifications

Suspension type	5-link type rigid with coil spring
Shock absorber type	Double-acting hydraulic
Stabilizer	Standard equipment

Inspection and Adjustment

WHEEL BEARING

Wheel bearing axial end play mm (in)	0 (0)
Wheel bearing lock nut Tightening torque N·m (kg-m, ft-lb)	245 - 314 (25 - 32, 181 - 231)
Wheel bearing preload measured at bearing cage bolt N (kg, lb)	6.9 - 48.1 (0.7 - 4.9, 1.5 - 10.8)