SECTION EX
EXHAUST SYSTEM

CONTENTS

PREPARATION

PFP:00002

Special Service Tools

EBS003GD

The actual shapes of Kent-Moore tools may differ from those of special service tools illustrated here.

Tool number (Kent-Moore No.) Tool name		Description
KV10114400 (J-38365) Heated oxygen sensor wrench	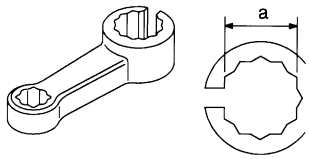 S-NT636	Loosening or tightening heated oxygen sensor **For 22 mm (0.87 in) width hexagon nut**

Commercial Service Tools

EBS003GE

(Kent-Moore No.) Tool name		Description
(J-43897-18) (J-43897-12) Heated oxygen sensor thread cleaner	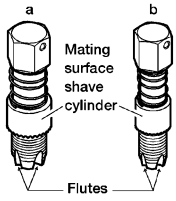 AEM488	Reconditioning the exhaust system threads before installing a new heated oxygen sensor (Use with anti-seize lubricant shown below.) **a: J-43897-18 (18 mm dia.) for zirconia heated oxygen sensor** **b: J-43897-12 (12 mm dia.) for titania heated oxygen sensor**
Anti-seize lubricant (Permatex 133AR or equivalent meeting MIL specification MIL-A-907)	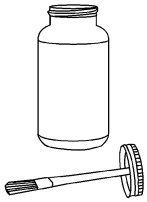 AEM489	Lubricating heated oxygen sensor thread cleaner when reconditioning exhaust system threads
Power tool	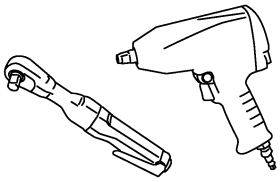 PBIC0190E	Loosening bolts and nuts

EXHAUST SYSTEM

PFP:20100

Checking Exhaust System

EBS004VQ

Check exhaust pipes, muffler and mounting for improper attachment, leaks, cracks, damage or deterioration.

- If anything is found, repair or replace damaged parts.

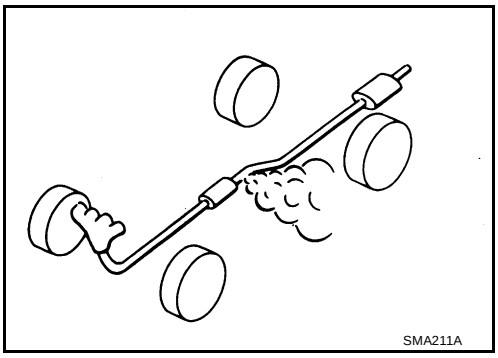

Removal and Installation

EBS001JQ

CAUTION:

- **Be sure to use genuine exhaust system parts or equivalents which are specially designed for heat resistance, corrosion resistance, and shape.**
- **Perform the operation with the exhaust system fully cooled down because the system will be hot just after engine stops.**
- **Be careful not to cut your hand on the insulator edge.**

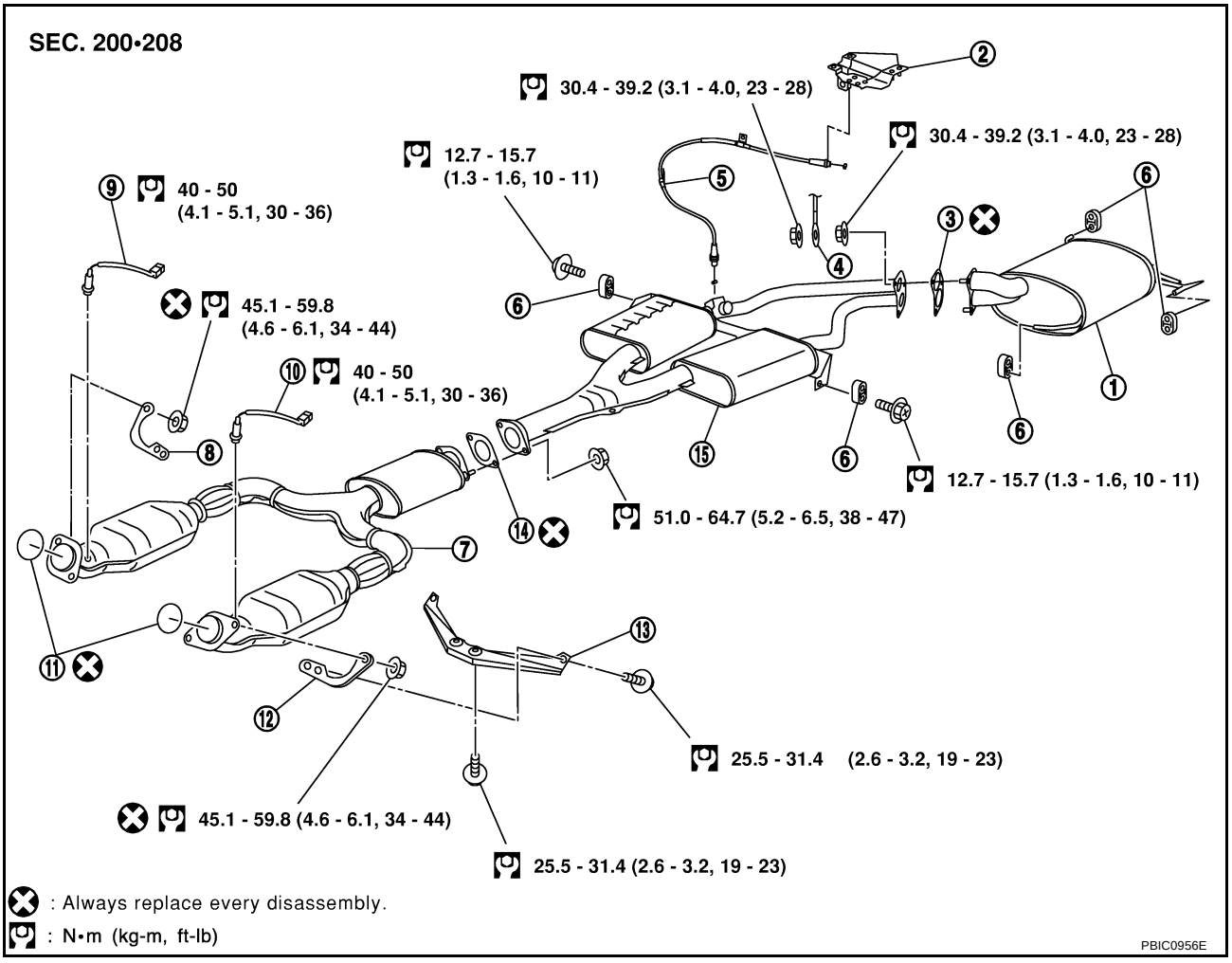

1.	Main muffler	2.	Actuator	3.	Gasket
4.	Ground cable	5.	Cable	6.	Mounting rubber
7.	Exhaust front tube	8.	Bracket	9.	Heated oxygen sensor 2 (bank 2)

10. Heated oxygen sensor 2 (bank 1)	11. Ring gasket	12. Bracket
13. Bracket	14. Gasket	15. Center muffler

REMOVAL

1. Remove cable from exhaust control valve. Refer to Dual mode muffler, EX-9, "Removal and Installation" .
2. Remove heated oxygen sensor 2 as follows:

NOTE:
Information for parts installation/disassembly is as follows although the information is not needed in view of installation/disassembly procedure.

a. Disconnect harness connector of each heated oxygen sensor 2.

b. Using heated oxygen sensor wrench (SST), remove both left and right heated oxygen sensor 2.
   - Put marks to identify installation positions of each heated oxygen sensor 2.

CAUTION:
Be careful not to damage heated oxygen sensor.

NOTE:
Figure is shown as an example of right bank.

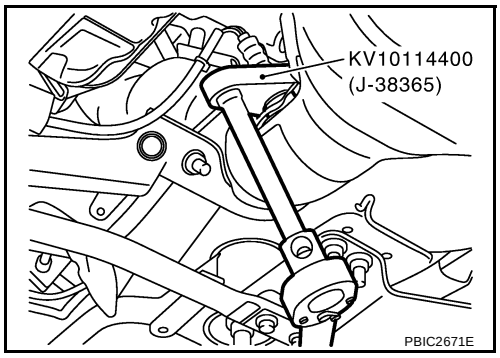

3. Disconnect each joint and mounting using power tool.

INSTALLATION

Install in the reverse order of removal.

CAUTION:

- **Always replace exhaust gaskets with new ones when reassembling.**
- **When using heated oxygen sensor wrench [KV10114400 (J-38365)], tighten to the middle of specified torque because length of tool may induce slight indication increase. (Do not tighten to the maximum specified torque.)**
- **Discard any heated oxygen sensor which has been dropped from a height of more than 0.5 m (19.7 in) onto a hard surface such as a concrete floor; use a new one.**
- **Before installing a new heated oxygen sensor, clean exhaust system threads using the heated oxygen sensor thread cleaner [commercial service tool: J-43897-18 or J-43897-12], and apply anti-seize lubricant (commercial service tool).**
- **Do not over torque heated oxygen sensor. Doing so may cause damage to the heated oxygen sensor, resulting in the MIL coming on.**
- **If the insulator is badly deformed, repair or replace it. If deposits such as mud pile up on the insulator, remove them.**
- **When installing insulator avoid large gaps or interference between insulator and each exhaust pipe.**
- **Remove deposits and left over gasket material from the sealing surface of each connection. Connect them securely to avoid gas leakage.**
- **Temporarily tighten mounting nuts on the exhaust manifold side and mounting bolts on the vehicle side. Check each part for unusual interference, and then tighten them to the specified torque.**
- **When installing each clamp, align the protrusion on insulator with the clamp hole.**
- **When installing each mounting rubber, avoid twisting or unusual extension in up/down and right/left directions.**

- **Install mounting rubbers on rear main muffler as shown.**

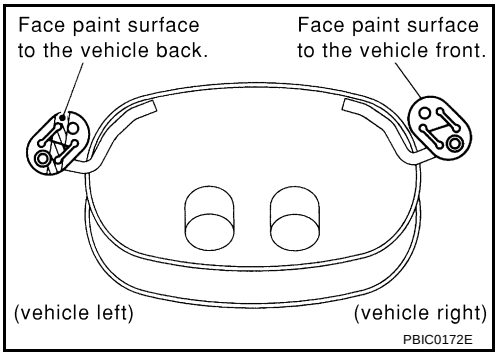

INSPECTION AFTER INSTALLATION

Install in the reverse order of removal paying attention to the followings.

- Check clearance between tail tube and bumper is even.
- With engine running, check exhaust tube joints for gas leakage and unusual noises.
- Check to ensure that mounting brackets and mounting insulators are installed properly and free from undue stress. Improper installation could result in excessive noise and vibration.

DUAL MODE MUFFLER

PFP:20130

Component Parts Location

EBS011TR

NOTE:
Refer to EX-9, "Removal and Installation" about Muffler control unit and Cable.

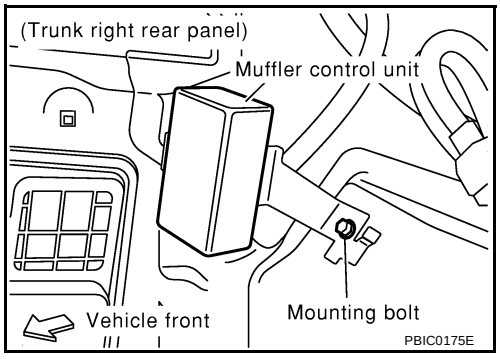

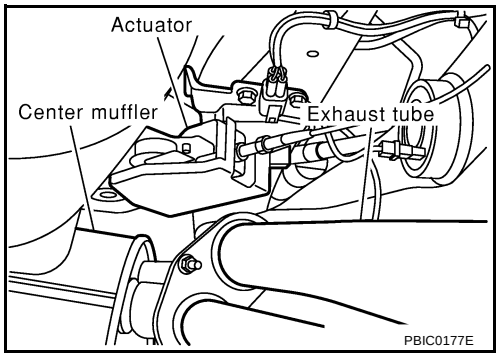

WIRING DIAGRAM -VEXH-

EBS011TS

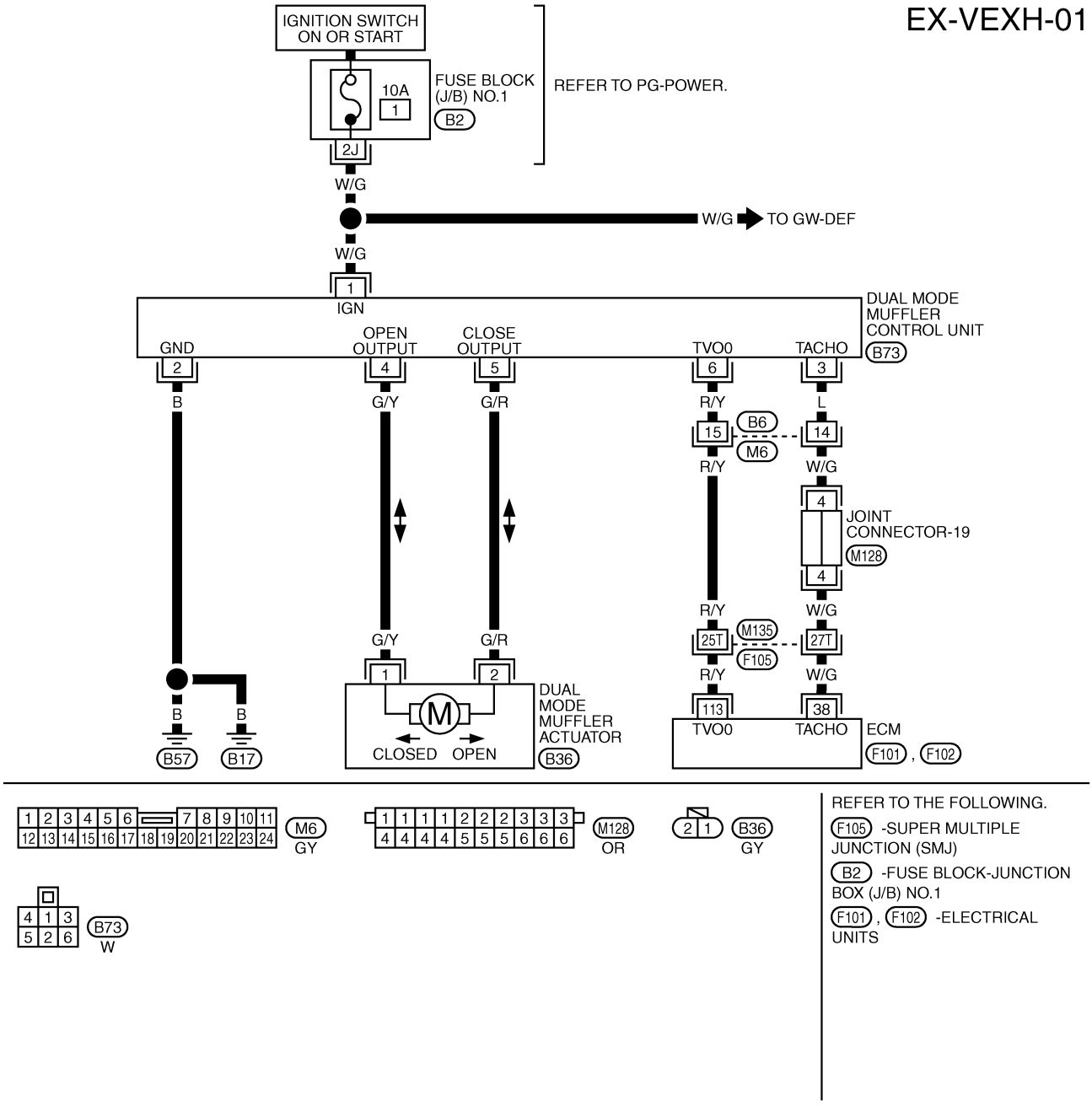

Terminals and Reference Value for Dual Mode Muffler Control Unit

EBS011TT

Terminal No. (Wire color)	Item	condition: Ignition switch	condition: Operation or condition	Voltage (V)
1 (W/G)	Ignition switch	OFF		0
		ON		Battery voltage
2 (B)	Ground	ON		0
3 (L)	Engine speed signal	—	Idling	Approx. 4 - 6
4 (G/Y)	Exhaust control valve signal (Open)	ON	CLOSE	0 - 1
			OPEN	Battery voltage
5 (G/R)	Exhaust control valve signal (Close)		CLOSE	Battery voltage
			OPEN	0 - 1
6 (R/Y)	Accelerator pedal position signal	ON	Over half	More than approx. 2.4
			Below half	Approx. 0 - 2.4

Components Inspection

EBS011TU

EXHAUST CONTROL VALVE

Check operation of valve and actuator by revving engine.

Condition: Accelerator pedal opening	Condition: Engine rpm	Exhaust control valve
Below half (no-load)	Above approximate 4830 rpm	Open
	Below approximate 4730 rpm	Close
Over half (loaded)	—	Open

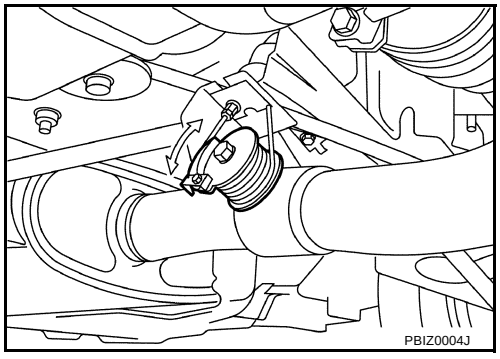

DUAL MODE MUFFLER ACTUATOR

Check voltage between terminals 1 and 2 of dual mode muffler actuator harness connector and ground.

Terminals (+)	Terminal (Wire color)	Terminals (-)	Exhaust control valve: Open	Exhaust control valve: Close
1	(G/Y)	GND	Battery voltage	0 - 1V
2	(G/R)		0 - 1V	Battery voltage

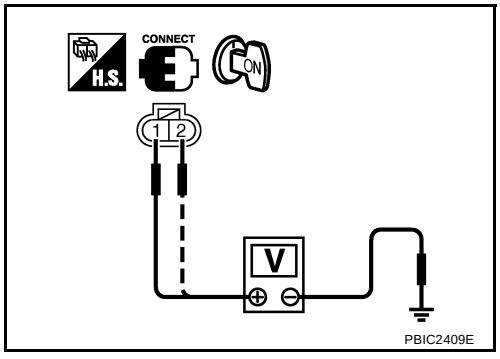

Removal and Installation

EBS00LS4

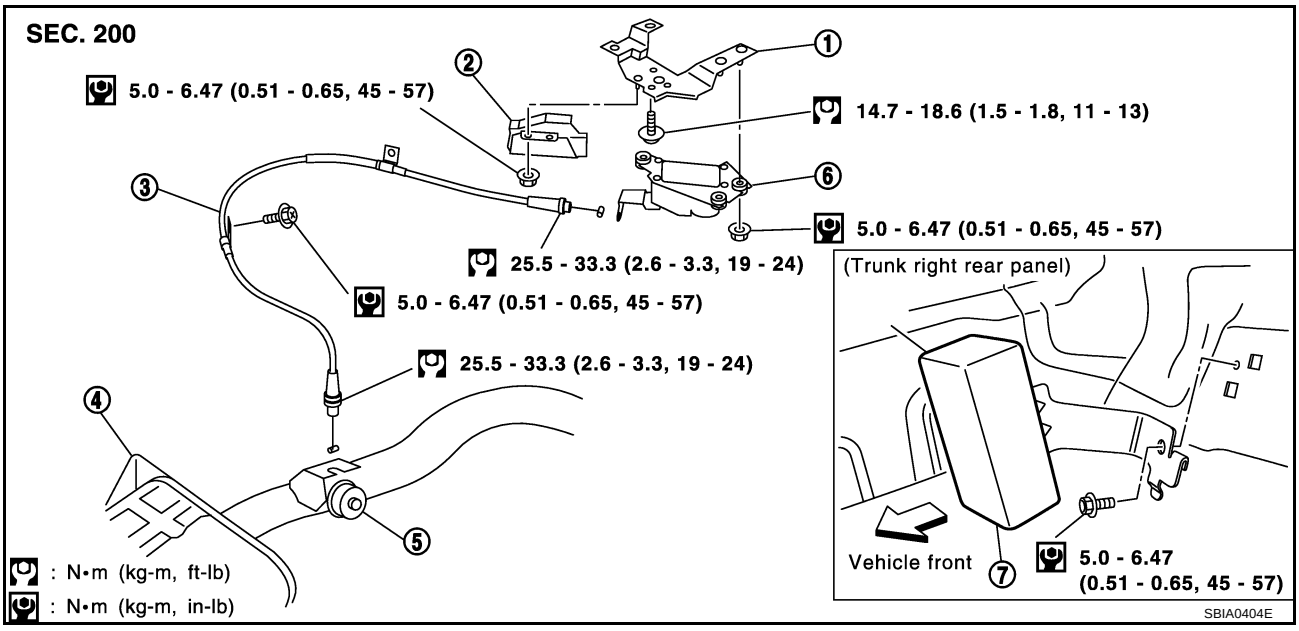

1.	Actuator mounting bracket	2.	Cover	3.	Cable
4.	Center muffler	5.	Exhaust control valve (Do not disassemble.)	6.	Actuator
7.	Muffler control unit				

NOTE:
Exhaust control valve is provided in center muffler and not permitted to disassemble.

REMOVAL (CABLE)

NOTE:
Removal and installation procedure is the same on both side of actuator and exhaust control valve.

1. Remove cable from actuator and exhaust control valve.
   - Loosen lock nut A.

     CAUTION:
     Do not loosen positioning nuts B and C.
2. Remove middle clamp bolt and cable.

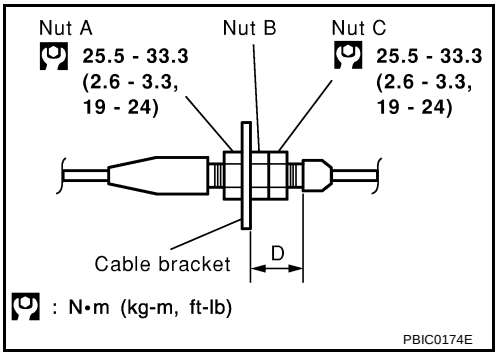

INSTALLATION (CABLE)

- Install in the reverse order of removal.
- Install cable on cable bracket and then tighten lock nut A to specified torque.
- To avoid twisting the cable when tightening the lock nut A, hold the positioning nut B or C with a wrench.
- If the positioning nuts B and C are loosened, place the nut B so that span D becomes 17.0 mm (0.669 in). Hold the nut B with a wrench and tighten the nut C to specified torque.

  NOTE:
  Additional adjustment is unnecessary.

REMOVAL (ACTUATOR)

1. Remove insulator on lower side of actuator.
2. Disconnect harness connector and cable from actuator.
   Refer to EX-9, "REMOVAL (CABLE)" .
3. Remove actuator.

INSTALLATION (ACTUATOR)

Install in the reverse order of removal.

REMOVAL (MUFFLER CONTROL UNIT)

1. Open trunk lid, and remove trunk side finisher (right).
2. Remove muffler control unit fixing bolt.
3. Disconnect harness connector and remove muffler control unit along with bracket.

   CAUTION:
   Do not drop or damage muffler control unit when removing.

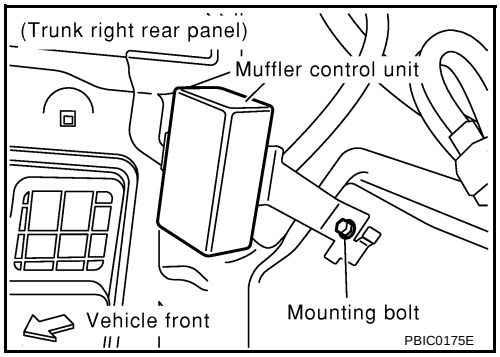

INSTALLATION

Install in the reverse order of removal.

SERVICE DATA AND SPECIFICATIONS (SDS)

PFP:00030

Tightening Torque

EBS001Z8

Unit: N·m (kg-m, ft-lb)
Unit: N·m (kg-m, in-lb)*

Exhaust system connections	
Between exhaust manifold and exhaust front tube	45.1 - 59.8 (4.6 - 6.1, 34 - 44)
Between exhaust front tube and center muffler	51.0 - 64.7 (5.2 - 6.5, 38 - 47)
Between center muffler and main muffler	30.4 - 39.2 (3.1 - 4.0, 23 - 28)
Exhaust mounting fixing bolts	
For exhaust front tube	25.5 - 31.4 (2.6 - 3.2, 19 - 23)
For center muffler	12.7 - 15.7 (1.3 - 1.6, 10 - 11)
Heated oxygen sensor 2 (bank 1) (bank 2)	40 - 50 (4.1 - 5.1, 30 - 36)
Dual mode muffler	
Muffler control unit	5.0 - 6.47 (0.51 - 0.65, 45 - 57)*
Actuator	5.0 - 6.47 (0.51 - 0.65, 45 - 57)*
Actuator mounting bracket	14.7 - 18.6 (1.5 - 1.8, 11 - 13)
Cover	5.0 - 6.47 (0.51 - 0.65, 45 - 57)*
Cable lock nut (Both actuator and valve side)	25.5 - 33.3 (2.6 - 3.3, 19 - 24)
Cable middle clamp tightening bolt	5.0 - 6.47 (0.51 - 0.65, 45 - 57)*