SECTION GW

GLASSES, WINDOW SYSTEM & MIRRORS

CONTENTS

PRECAUTIONS

PFP:00001

Precautions for Supplemental Restraint System (SRS) “AIR BAG” and “SEAT BELT PRE-TENSIONER”

NIS00216

The Supplemental Restraint System such as “AIR BAG” and “SEAT BELT PRE-TENSIONER”, used along with a front seat belt, helps to reduce the risk or severity of injury to the driver and front passenger for certain types of collision. This system includes seat belt switch inputs and dual stage front air bag modules. The SRS system uses the seat belt switches to determine the front air bag deployment, and may only deploy one front air bag, depending on the severity of a collision and whether the front occupants are belted or unbelted.
Information necessary to service the system safely is included in the SRS and SB section of this Service Manual.

WARNING:

- **To avoid rendering the SRS inoperative, which could increase the risk of personal injury or death in the event of a collision which would result in air bag inflation, all maintenance must be performed by an authorized NISSAN/INFINITI dealer.**
- **Improper maintenance, including incorrect removal and installation of the SRS, can lead to personal injury caused by unintentional activation of the system. For removal of Spiral Cable and Air Bag Module, see the SRS section.**
- **Do not use electrical test equipment on any circuit related to the SRS unless instructed to in this Service Manual. SRS wiring harnesses can be identified by yellow and/or orange harnesses or harness connectors.**

Precautions for Procedures without Cowl Top Cover

NIS00217

When performing the procedure after removing cowl top cover, cover the lower end of windshield with urethane, etc.

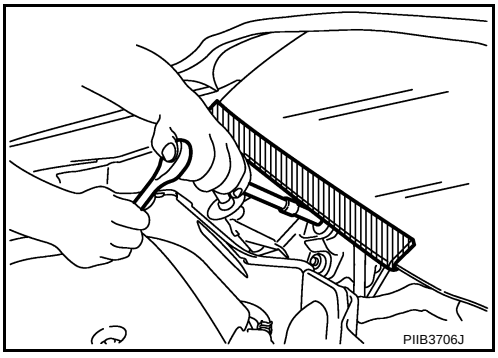

Handling for Adhesive and Primer

NIS00218

- Do not use an adhesive which is past its usable date. Shelf life of this product is limited to six months after the date of manufacture. Carefully adhere to the expiration or manufacture date printed on the box.
- Keep primers and adhesive in a cool, dry place. Ideally, they should be stored in a refrigerator.
- Open the seal of the primer and adhesive just before application. Discard the remainder.
- Before application, be sure to shake the primer container to stir the contents. If any floating material is found, do not use it.
- If any primer or adhesive contacts the skin, wipe it off with gasoline or equivalent and wash the skin with soap.
- When using primer and adhesive, always observe the precautions in the instruction manual.

PREPARATION

PFP:00002

Special Service Tools

NIS00219

The actual shapes of Kent-Moore tools may differ from those of special service tools illustrated here.

Tool number (Kent-Moore No.) Tool name		Description
(J-39570) Chassis ear	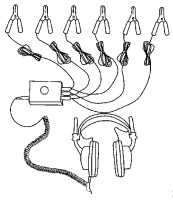 SIIA0993E	Locating the noise
(J-43980) NISSAN Squeak and Rattle Kit	 SIIA0994E	Repairing the cause of noise

Commercial Service Tools

NIS0021A

Tool name		Description
Engine ear	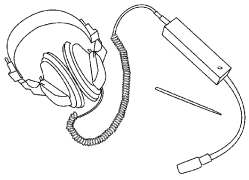 SIIA0995E	Locating the noise
Suction lifter	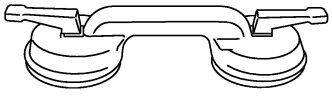 PIIB1805J	Holding the door glass

SQUEAK AND RATTLE TROUBLE DIAGNOSES

PFP:00000

Work Flow

NIS0021B

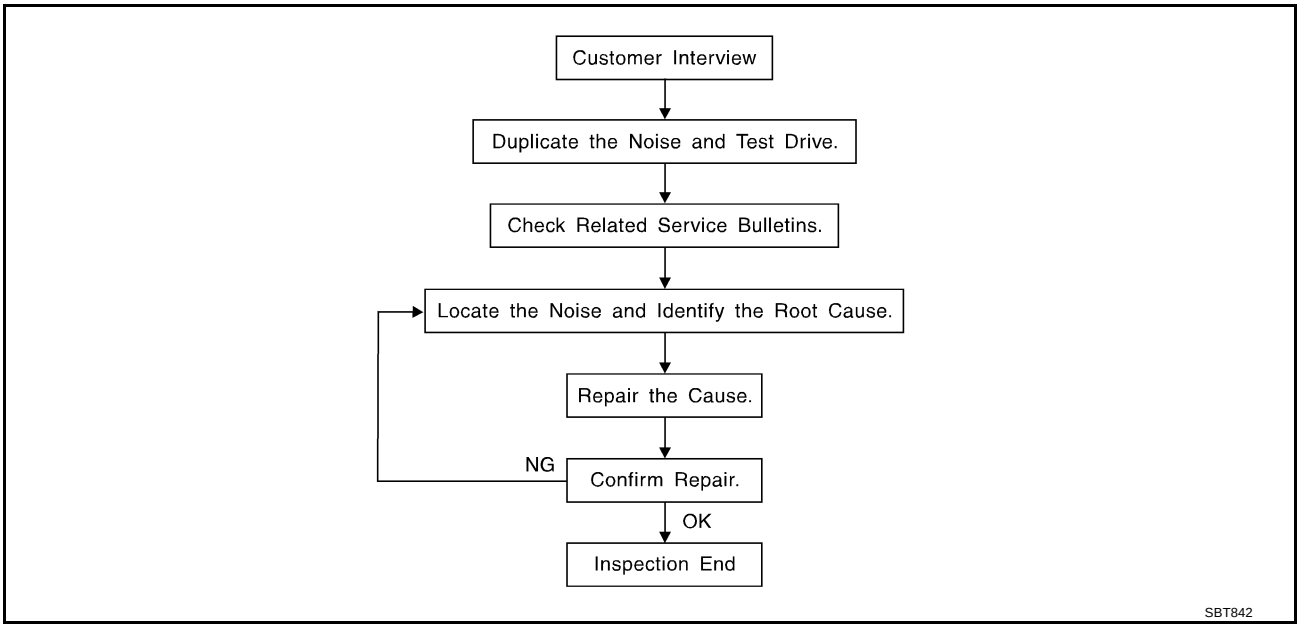

CUSTOMER INTERVIEW

Interview the customer if possible, to determine the conditions that exist when the noise occurs. Use the Diagnostic Worksheet during the interview to document the facts and conditions when the noise occurs and any customer's comments; refer to GW-9, "Diagnostic Worksheet" . This information is necessary to duplicate the conditions that exist when the noise occurs.

- The customer may not be able to provide a detailed description or the location of the noise. Attempt to obtain all the facts and conditions that exist when the noise occurs (or does not occur).
- If there is more than one noise in the vehicle, be sure to diagnose and repair the noise that the customer is concerned about. This can be accomplished by test driving the vehicle with the customer.
- After identifying the type of noise, isolate the noise in terms of its characteristics. The noise characteristics are provided so the customer, service adviser and technician are all speaking the same language when defining the noise.
- Squeak —(Like tennis shoes on a clean floor)
  Squeak characteristics include the light contact/fast movement/brought on by road conditions/hard surfaces=higher pitch noise/softer surfaces=lower pitch noises/edge to surface=chirping
- Creak—(Like walking on an old wooden floor)
  Creak characteristics include firm contact/slow movement/twisting with a rotational movement/pitch dependent on materials/often brought on by activity.
- Rattle—(Like shaking a baby rattle)
  Rattle characteristics include the fast repeated contact/vibration or similar movement/loose parts/missing clip or fastener/incorrect clearance.
- Knock —(Like a knock on a door)
  Knock characteristics include hollow sounding/sometimes repeating/often brought on by driver action.
- Tick—(Like a clock second hand)
  Tick characteristics include gentle contacting of light materials/loose components/can be caused by driver action or road conditions.
- Thump—(Heavy, muffled knock noise)
  Thump characteristics include softer knock/dead sound often brought on by activity.
- Buzz—(Like a bumble bee)
  Buzz characteristics include high frequency rattle/firm contact.
- Often the degree of acceptable noise level will vary depending upon the person. A noise that you may judge as acceptable may be very irritating to the customer.
- Weather conditions, especially humidity and temperature, may have a great effect on noise level.

DUPLICATE THE NOISE AND TEST DRIVE

If possible, drive the vehicle with the customer until the noise is duplicated. Note any additional information on the Diagnostic Worksheet regarding the conditions or location of the noise. This information can be used to duplicate the same conditions when you confirm the repair.
If the noise can be duplicated easily during the test drive, to help identify the source of the noise, try to duplicate the noise with the vehicle stopped by doing one or all of the following:

1) Close a door.
2) Tap or push/pull around the area where the noise appears to be coming from.
3) Rev the engine.
4) Use a floor jack to recreate vehicle “twist”.
5) At idle, apply engine load (electrical load, half-clutch on M/T models, drive position on A/T models).
6) Raise the vehicle on a hoist and hit a tire with a rubber hammer.

- Drive the vehicle and attempt to duplicate the conditions the customer states exist when the noise occurs.
- If it is difficult to duplicate the noise, drive the vehicle slowly on an undulating or rough road to stress the vehicle body.

CHECK RELATED SERVICE BULLETINS

After verifying the customer concern or symptom, check ASIST for Technical Service Bulletins (TSBs) related to that concern or symptom.
If a TSB relates to the symptom, follow the procedure to repair the noise.

LOCATE THE NOISE AND IDENTIFY THE ROOT CAUSE

1. Narrow down the noise to a general area. To help pinpoint the source of the noise, use a listening tool (Chassis Ear: J-39570, Engine Ear and mechanics stethoscope).
2. Narrow down the noise to a more specific area and identify the cause of the noise by:

- removing the components in the area that you suspect the noise is coming from.
  Do not use too much force when removing clips and fasteners, otherwise clips and fastener can be broken or lost during the repair, resulting in the creation of new noise.
- tapping or pushing/pulling the component that you suspect is causing the noise.
  Do not tap or push/pull the component with excessive force, otherwise the noise will be eliminated only temporarily.
- feeling for a vibration with your hand by touching the component(s) that you suspect is (are) causing the noise.
- placing a piece of paper between components that you suspect are causing the noise.
- looking for loose components and contact marks.
  Refer to GW-7, "Generic Squeak and Rattle Troubleshooting" .

REPAIR THE CAUSE

- If the cause is a loose component, tighten the component securely.
- If the cause is insufficient clearance between components:
  - separate components by repositioning or loosening and retightening the component, if possible.
  - insulate components with a suitable insulator such as urethane pads, foam blocks, felt cloth tape or urethane tape. A Nissan Squeak and Rattle Kit (J-43980) is available through your authorized Nissan Parts Department.

CAUTION:
Do not use excessive force as many components are constructed of plastic and may be damaged.

NOTE:
Always check with the Parts Department for the latest parts information.
The following materials are contained in the Nissan Squeak and Rattle Kit (J-43980). Each item can be ordered separately as needed.
URETHANE PADS [1.5 mm (0.059 in) thick]
Insulates connectors, harness, etc.
76268-9E005: 100 × 135 mm (3.94 × 5.31 in)/76884-71L01: 60 × 85 mm (2.36 × 3.35 in)/76884-71L02: 15 × 25 mm (0.59 × 0.98 in)
INSULATOR (Foam blocks)
Insulates components from contact. Can be used to fill space behind a panel.
73982-9E000: 45 mm (1.77 in) thick, 50 × 50 mm (1.97 × 1.97 in)/73982-50Y00: 10 mm (0.39 in) thick, 50 × 50 mm (1.97 × 1.97 in)

INSULATOR (Light foam block)
80845-71L00: 30 mm (1.18 in) thick, 30 × 50 mm (1.18 × 1.97 in)
FELT CLOTHTAPE
Used to insulate where movement does not occur. Ideal for instrument panel applications.
68370-4B000: 15 × 25 mm (0.59 × 0.98 in) pad/68239-13E00: 5 mm (0.20 in) wide tape roll
The following materials, not found in the kit, can also be used to repair squeaks and rattles.
UHMW (TEFLON) TAPE
Insulates where slight movement is present. Ideal for instrument panel applications.
SILICONE GREASE
Used in place of UHMW tape that will be visible or not fit. Will only last a few months.
SILICONE SPRAY
Use when grease cannot be applied.
DUCT TAPE
Use to eliminate movement.

CONFIRM THE REPAIR

Confirm that the cause of a noise is repaired by test driving the vehicle. Operate the vehicle under the same conditions as when the noise originally occurred. Refer to the notes on the Diagnostic Worksheet.

Generic Squeak and Rattle Troubleshooting

NIS0021C

Refer to Table of Contents for specific component removal and installation information.

INSTRUMENT PANEL

Most incidents are caused by contact and movement between:

1. The cluster lid A and instrument panel
2. Acrylic lens and combination meter housing
3. Instrument panel to front pillar garnish
4. Instrument panel to windshield
5. Instrument panel mounting pins
6. Wiring harnesses behind the combination meter
7. A/C defroster duct and duct joint

These incidents can usually be located by tapping or moving the components to duplicate the noise or by pressing on the components while driving to stop the noise. Most of these incidents can be repaired by applying felt cloth tape or silicon spray (in hard to reach areas). Urethane pads can be used to insulate wiring harness.

CAUTION:
Do not use silicone spray to isolate a squeak or rattle. If you saturate the area with silicone, you will not be able to recheck the repair.

CENTER CONSOLE

Components to pay attention to include:

1. Shifter assembly cover to finisher
2. A/C control unit and cluster lid C
3. Wiring harnesses behind audio and A/C control unit

The instrument panel repair and isolation procedures also apply to the center console.

DOORS

Pay attention to the:

1. Finisher and inner panel making a slapping noise
2. Inside handle escutcheon to door finisher
3. Wiring harnesses tapping
4. Door striker out of alignment causing a popping noise on starts and stops

Tapping or moving the components or pressing on them while driving to duplicate the conditions can isolate many of these incidents. You can usually insulate the areas with felt cloth tape or insulator foam blocks from the Nissan Squeak and Rattle Kit (J-43980) to repair the noise.

TRUNK

Trunk noises are often caused by a loose jack or loose items put into the trunk by the owner.
In addition look for:

1. Trunk lid dumpers out of adjustment
2. Trunk lid striker out of adjustment
3. The trunk lid torsion bars knocking together
4. A loose license plate or bracket

Most of these incidents can be repaired by adjusting, securing or insulating the item(s) or component(s) causing the noise.

SUNROOF/HEADLINING

Noises in the sunroof/headlining area can often be traced to one of the following:

1. Sunroof lid, rail, linkage or seals making a rattle or light knocking noise
2. Sunvisor shaft shaking in the holder
3. Front or rear windshield touching headlining and squeaking

Again, pressing on the components to stop the noise while duplicating the conditions can isolate most of these incidents. Repairs usually consist of insulating with felt cloth tape.

SEATS

When isolating seat noise it's important to note the position the seat is in and the load placed on the seat when the noise is present. These conditions should be duplicated when verifying and isolating the cause of the noise.
Cause of seat noise include:

1. Headrest rods and holder
2. A squeak between the seat pad cushion and frame
3. The rear seatback lock and bracket

These noises can be isolated by moving or pressing on the suspected components while duplicating the conditions under which the noise occurs. Most of these incidents can be repaired by repositioning the component or applying urethane tape to the contact area.

UNDERHOOD

Some interior noise may be caused by components under the hood or on the engine wall. The noise is then transmitted into the passenger compartment.
Causes of transmitted underhood noise include:

1. Any component mounted to the engine wall
2. Components that pass through the engine wall
3. Engine wall mounts and connectors
4. Loose radiator mounting pins
5. Hood bumpers out of adjustment
6. Hood striker out of adjustment

These noises can be difficult to isolate since they cannot be reached from the interior of the vehicle. The best method is to secure, move or insulate one component at a time and test drive the vehicle. Also, engine RPM or load can be changed to isolate the noise. Repairs can usually be made by moving, adjusting, securing, or insulating the component causing the noise.

Diagnostic Worksheet

NIS0021D

INFINITI

SQUEAK & RATTLE DIAGNOSTIC WORKSHEET

Dear Infiniti Customer:
We are concerned about your satisfaction with your Infiniti vehicle. Repairing a squeak or rattle sometimes can be very difficult. To help us fix your Infiniti right the first time, please take a moment to note the area of the vehicle where the squeak or rattle occurs and under what conditions. You may be asked to take a test drive with a service consultant or technician to ensure we confirm the noise you are hearing.

I. WHERE DOES THE NOISE COME FROM? (circle the area of the vehicle)
The illustrations are for reference only, and may not reflect the actual configuration of your vehicle.

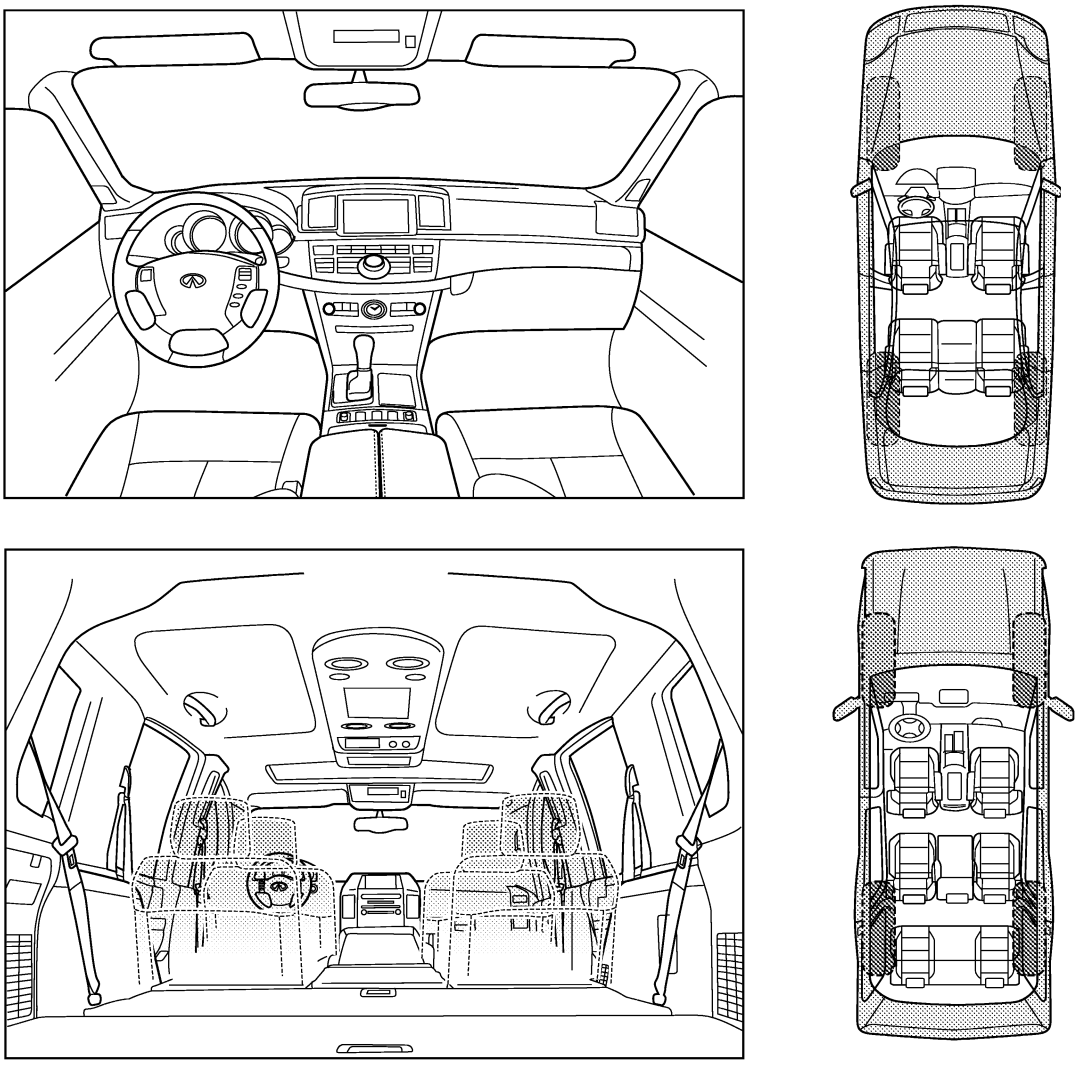

Continue to page 2 of the worksheet and briefly describe the location of the noise or rattle. In addition, please indicate the conditions which are present when the noise occurs.

PIIB8741E

SQUEAK & RATTLE DIAGNOSTIC WORKSHEET - page 2

Briefly describe the location where the noise occurs:

_____

_____

II. WHEN DOES IT OCCUR? (please check the boxes that apply)

- ☐ anytime
- ☐ 1st time in the morning
- ☐ only when it is cold outside
- ☐ only when it is hot outside
- ☐ after sitting out in the rain
- ☐ when it is raining or wet
- ☐ dry or dusty conditions
- ☐ other:

III. WHEN DRIVING:

- ☐ through driveways
- ☐ over rough roads
- ☐ over speed bumps
- ☐ only about ____ mph
- ☐ on acceleration
- ☐ coming to a stop
- ☐ on turns: left, right or either (circle)
- ☐ with passengers or cargo
- ☐ other: _____
- ☐ after driving _____ miles or _____ minutes

IV. WHAT TYPE OF NOISE

- ☐ squeak (like tennis shoes on a clean floor)
- ☐ creak (like walking on an old wooden floor)
- ☐ rattle (like shaking a baby rattle)
- ☐ knock (like a knock at the door)
- ☐ tick (like a clock second hand)
- ☐ thump (heavy, muffled knock noise)
- ☐ buzz (like a bumble bee)

TO BE COMPLETED BY DEALERSHIP PERSONNEL

Test Drive Notes:

_____

_____

_____

	YES	NO	Initials of person performing
Vehicle test driven with customer	☐	☐	_____
- Noise verified on test drive	☐	☐	_____
- Noise source located and repaired	☐	☐	_____
- Follow up test drive performed to confirm repair	☐	☐	_____

VIN: _____ Customer Name: _____

W.O.# _____ Date: _____

This form must be attached to Work Order

PIIB8742E

WINDSHIELD GLASS

PFP:72712

Removal and Installation

NIS0021E

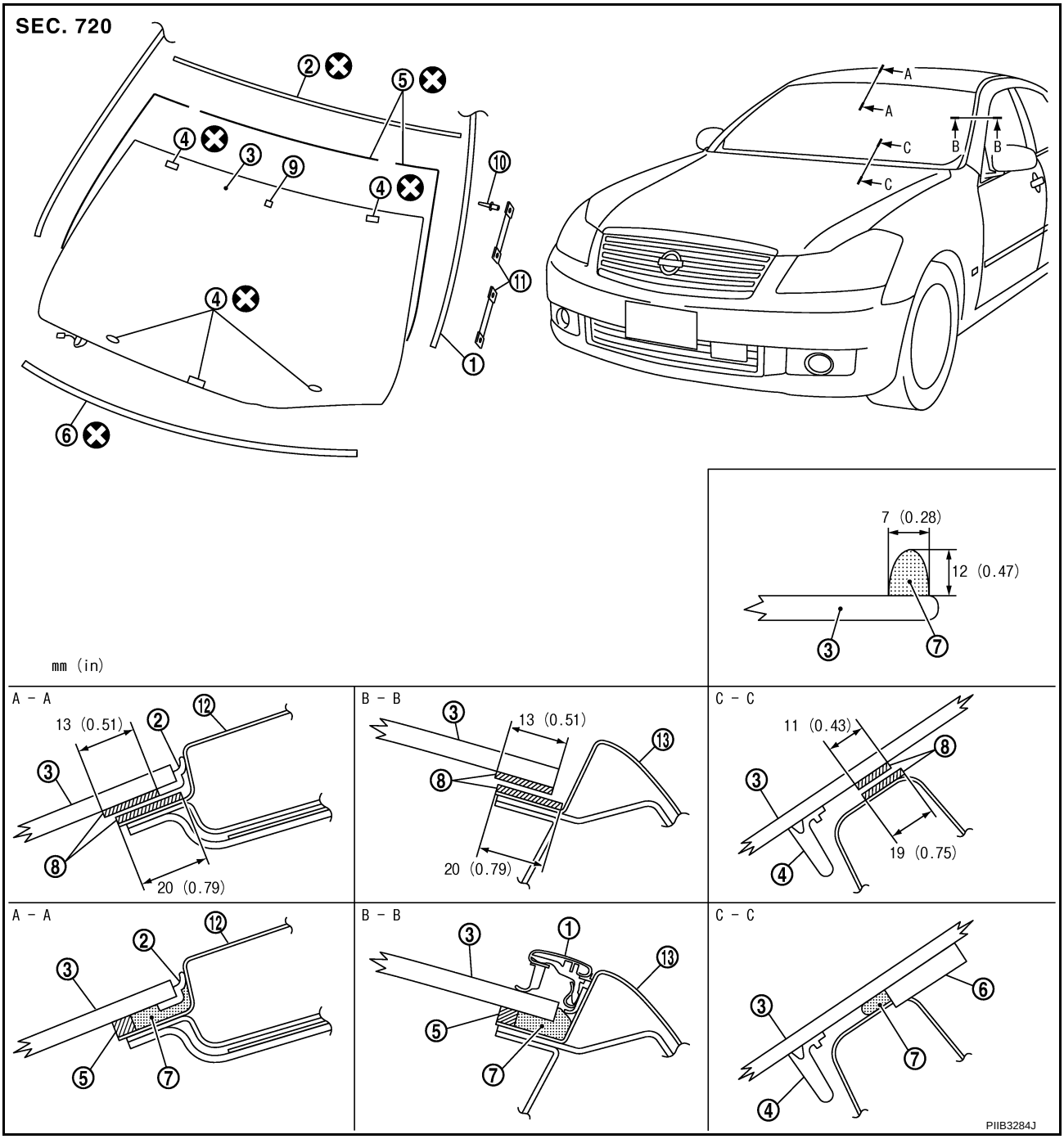

1. Roof side molding	2. Windshield molding (upper)	3. Windshield glass
4. Spacer	5. Dam rubber	6. Insulator
7. Adhesive	8. Primer	9. Mirror base
10. Rivet	11. Fastener	12. Roof panel
13. Body side outer panel		

REMOVAL

1. Remove the front pillar garnish. Refer to EI-37, "BODY SIDE TRIM" .
2. Partially remove the headlining (front edge). Refer to EI-52, "HEADLINING" .
3. Remove the front wiper arms. Refer to WW-43, "Removal and Installation of Front Wiper Arms, Adjustment of Wiper Arms Stop Location" .

4. Remove the cowl top cover. Refer to EI-18, "COWL TOP" .
5. Remove roof side molding. Refer to EI-25, "ROOF SIDE MOLDING" .
6. Apply a protective tape around the windshield glass to protect the painted surface from damage.
7. After removing moldings, remove glass using piano wire or power cutting tool A and an inflatable pump bag B.

NOTE:
If a windshield glass is to be reused, mark the body and the glass with mating marks.

WARNING:
When cutting the glass from the vehicle, always wear safety glasses and heavy gloves to help prevent glass splinters from entering your eyes or cutting your hands.

CAUTION:
- **When a windshield glass is to be reused, do not use a cutting knife or power cutting tool.**
- **Be careful not to scratch the glass when removing.**
- **Do not set or stand the glass on its edge. Small chips may develop into cracks.**

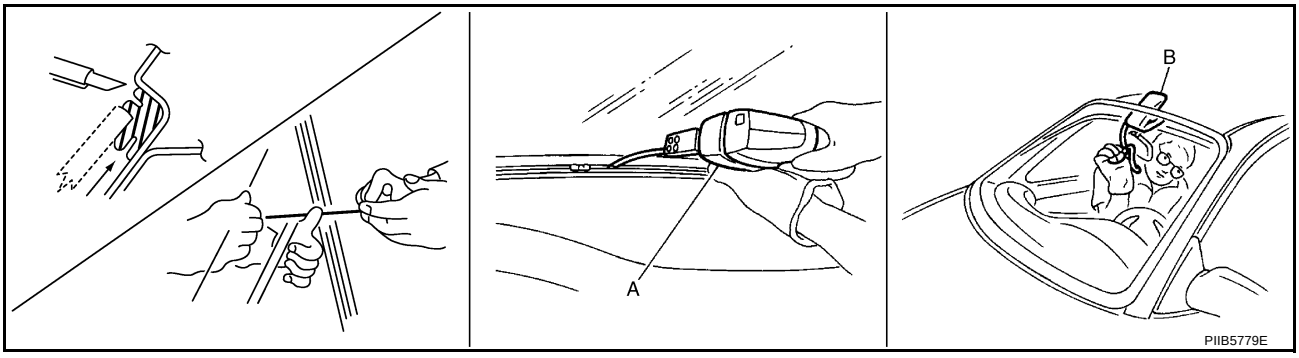

8. Remove the windshield glass, using suction lifter.

INSTALLATION

- The dam rubber should be installed in position.
- Use a genuine Nissan Urethane Adhesive Kit (if available) or equivalent and follow the instructions furnished with it.
- While the urethane adhesive is curing, open a door window. This will prevent the glass from being forced out by passenger room air pressure when a door is closed.
- The molding must be installed securely so that it is in position and leaves no gap.
- Inform the customer that the vehicle should remain stationary until the urethane adhesive has completely cured (preferably 24 hours). Curing time varies with temperature and humidity.

WARNING:
- **Keep heat and open flames away as primers and adhesive are flammable.**
- **The materials contained in the kit are harmful if swallowed, and may irritate skin and eyes. Avoid contact with the skin and eyes.**
- **Use in an open, well ventilated location. Avoid breathing the vapors. They can be harmful if inhaled. If affected by vapor inhalation, immediately move to an area with fresh air.**
- **Driving the vehicle before the urethane adhesive has completely cured may affect the performance of the windshield in case of an accident.**

CAUTION:
- **Do not use an adhesive which is past its usable term. Shelf life of this product is limited to six months after the date of manufacture. Carefully adhere to the expiration or manufacture date printed on the box.**
- **Keep primers and adhesive in a cool, dry place. Ideally, they should be stored in a refrigerator.**
- **Do not leave primers or adhesive cartridge unattended with their caps open or off.**
- **The vehicle should not be driven for at least 24 hours or until the urethane adhesive has completely cured. Curing time varies depending on temperature and humidity. The curing time will increase under lower temperature and lower humidity.**

Repairing Water Leaks for Windshield

Leaks can be repaired without removing and reinstalling glass.
If water is leaking between the urethane adhesive material and body or glass, determine the extent of leakage. This can be done by applying water to the windshield area while pushing glass outward.
To stop the leak, apply primer (if necessary) and then urethane adhesive to the leak point.

POWER WINDOW SYSTEM

PFP:25401

Component Parts and Harness Connector Location

NIS0021F

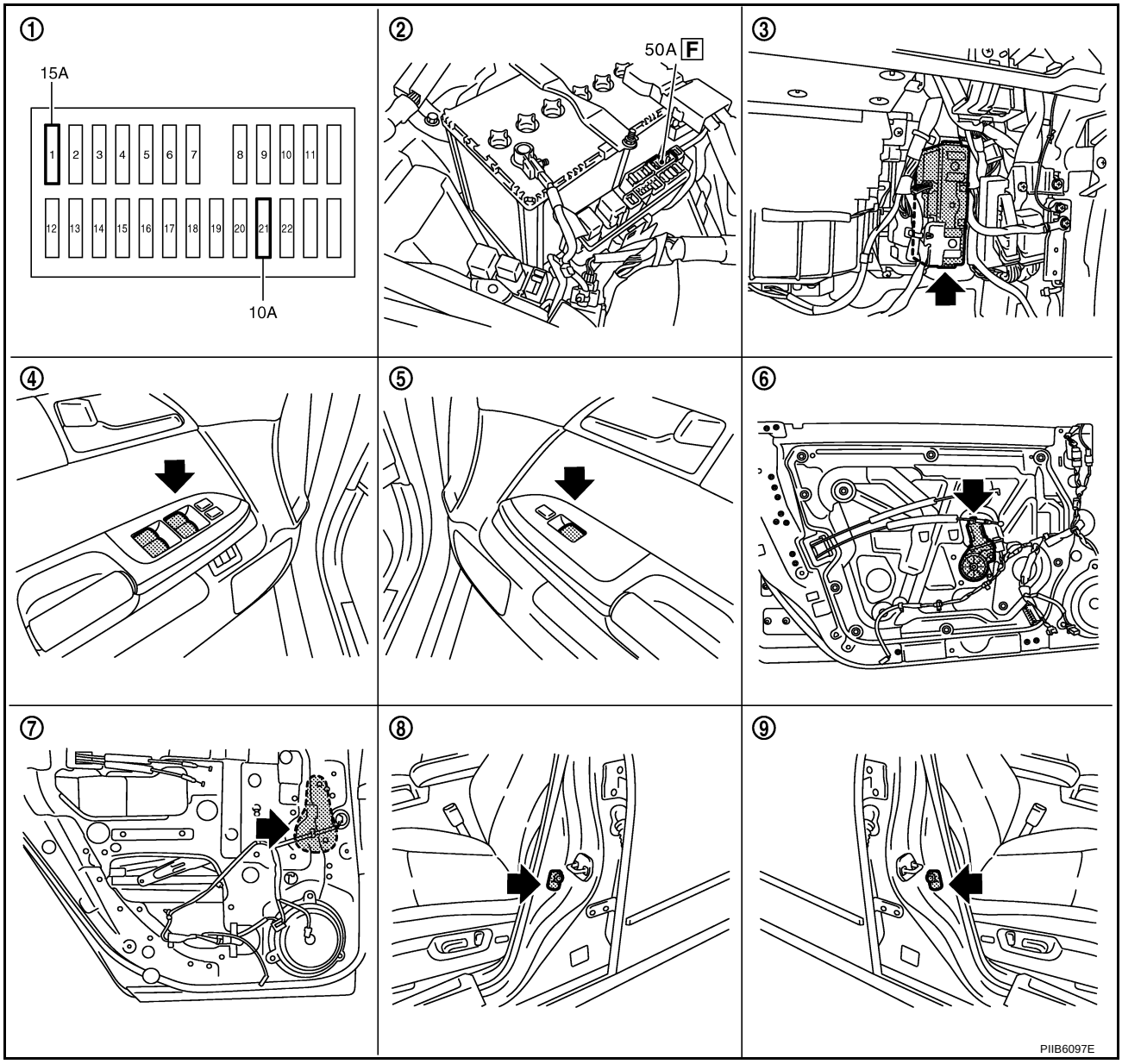

1.	Fuse block (J/B)	2.	Fusible link	3.	BCM M1, M2, M3
4.	Power window main switch D10, D11	5.	Power window sub-switch D46	6.	Power window motor (front driver side) D12
7.	Power window motor (rear LH) D58	8.	Front door switch driver side B11	9.	Front door switch passenger side B35

System Description

NIS0021G

Power is supplied at all time

- through 50A fusible link (letter **F** , located in the fuse and fusible link box)
- to BCM terminal 55, and
- through BCM terminal 54
- to power window main switch terminal 19
- to power window sub-switch (front passenger side) terminal 10
- to power window sub-switch (rear LH and RH) terminal 10.
- through 10A fuse [No. 21, located in the fuse block (J/B)]

- to BCM terminal 42.

With ignition switch in ON or START position,
Power is supplied

- through 15A fuse [No. 1, located in the fuse block (J/B)]
- to BCM terminal 38, and
- through BCM terminal 53
- to power window main switch terminal 10

Ground supplied

- to BCM terminal 52
- through body grounds M16 and M70.
- to power window main switch terminal 17
- through body grounds M16 and M70.
- to power window sub-switch (front passenger side) terminal 11
- through body grounds M16 and M70.
- to power window sub-switch (rear LH and RH) terminal 11
- through body grounds B5, B40 and B131.

MANUAL OPERATION

Front Driver Side Door

WINDOW UP

When the front LH switch in the power window main switch is pressed in the up position,
Power is supplied

- through power window main switch terminal 8
- to power window motor (front driver side) terminal 2.

Ground is supplied

- to power window motor (front driver side) terminal 1
- through power window main switch terminal 11.

Then, the motor raises the window until the switch is released.

WINDOW DOWN

When the front LH switch in the power window main switch is pressed in the down position
Power is supplied

- through power window main switch terminal 11
- to power window motor (front driver side) terminal 1.

Ground is supplied

- to power window motor (front driver side) terminal 2
- through power window main switch terminal 8.

Then, the motor lowers the window until the switch is released.

Front Passenger Side Door

POWER WINDOW SUB-SWITCH (FRONT PASSENGER SIDE) OPERATION

WINDOW UP

When the power window sub-switch (front passenger side) is pressed in the up position
Power is supplied

- through power window sub-switch (front passenger side) terminal 8
- to power window motor (front passenger side) terminal 2.

Ground is supplied

- to power window motor (front passenger side) terminal 1
- through power window sub-switch (front passenger side) terminal 9.

Then, the motor raises the window until the switch is released.

WINDOW DOWN

When the power window sub-switch (front passenger side) is pressed in the down position
Power is supplied

- through power window sub-switch (front passenger side) terminal 9
- to power window motor (front passenger side) terminal 1.

Ground is supplied

- to power window motor (front passenger side) terminal 2
- through power window sub-switch (front passenger side) terminal 8.

Then, the motor lowers the window until the switch is released.

POWER WINDOW MAIN SWITCH OPERATION

Signal is sent

- though power window main switch terminal 14.
- to power window sub-switch (front passenger side) terminal 16

The operation of power window after receive the signal is as same as operate the power window with power window sub-switch (front passenger side).

Rear Door (LH or RH)

POWER WINDOW SUB-SWITCH (REAR LH OR RH) OPERATION

WINDOW UP

When the power window sub-switch (rear LH or RH) is pressed in the up position
Power is supplied

- through power window sub-switch (rear LH or RH) terminal 8
- to power window motor (rear LH or RH) terminal 1.

Ground is supplied

- to power window motor (rear LH or RH) terminal 2
- through power window sub-switch (rear LH or RH) terminal 9.

Then, the motor raises the window until the switch is released.

WINDOW DOWN

When the power window sub-switch (rear LH or RH) is pressed in the down position
Power is supplied

- through power window sub-switch (rear LH or RH) terminal 9
- to power window motor (rear LH or RH) terminal 2.

Ground is supplied

- to power window motor (rear LH or RH) terminal 1
- through power window sub-switch (rear LH or RH) terminal 8.

Then, the motor lowers the window until the switch is released.

POWER WINDOW MAIN SWITCH OPERATION

Signal is sent

- though power window main switch terminal 14.
- to power window sub-switch (rear LH or RH) terminal 16

The operation of power window after receive the signal is as same as operate the power window sub-switch (rear LH or RH).

AUTO OPERATION

The power window AUTO feature enables the driver to open or close the window without holding the window switch in the down or up position.

POWER WINDOW SERIAL LINK

Power window main switch, any power window sub-switches and BCM transmit and receive the signal by power window serial link.
The under mentioned signal is transmitted from BCM to power window main switch and power window sub-switches.

- Keyless power window down signal.

The under mentioned signal is transmitted from power window main switch to power window sub-switch (front passenger side)

- Front passenger side door window operation signal.
- Power window control by key cylinder switch signal.
- Power window lock signal.
- Retained power operation signal.

The under mentioned signal is transmitted from power window main switch to power window sub-switch (rear LH or RH)

- Rear LH or RH side door window operation signal.
- Power window control by key cylinder switch signal.
- Power window lock signal.
- Retained power operation signal.

POWER WINDOW LOCK

The power window lock is designed to lock operation of all windows except for driver side door window.
When the lock position, the power window lock signal is transmitted to any power window sub-switches by power window serial link. This prevents the power window motors from operating.

RETAINED POWER OPERATION

When the ignition switch is turned to the OFF position from ON or START position.
Power is supplied for 45 seconds

- through BCM terminal 53
- to power window main switch terminal 10.

When power and ground are supplied, the BCM continues to be energized, and the power window can be operated.
The retained power operation is canceled when the driver or passenger side door is opened.
RAP signal period can be changed by CONSULT-II. Refer to GW-30, "CONSULT-II Function (BCM)" .

ANTI-PINCH SYSTEM

Power window main switch and each power window sub-switch recognizes and controls the door glass condition by reading encoder signals 1 and 2.

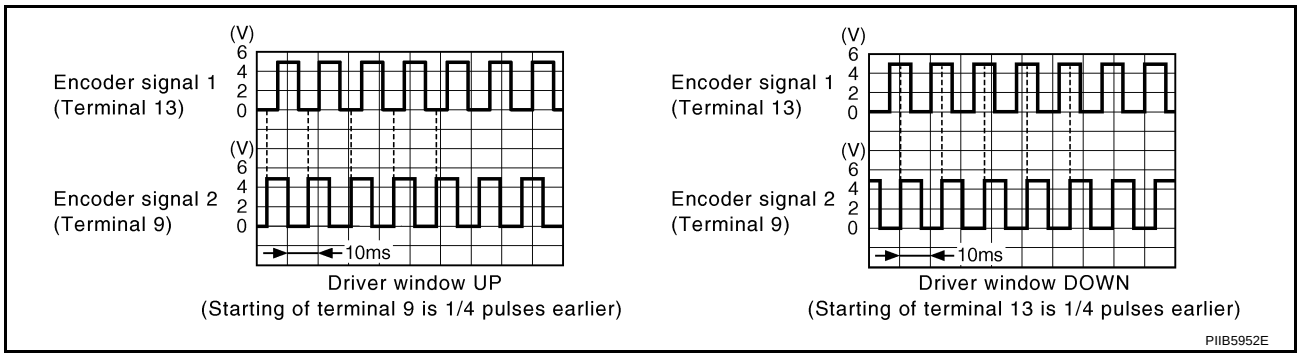

If a door glass is subject to a certain resistance due to a foreign material obstruction during the following close operation.

- automatic close operation when ignition switch is in the “ON” position
- automatic close operation during retained power operation
- Key cylinder switch close operation during retained power operation

The power window switch reads encoder signal 1, It stops UP operation of the motor, and sends a signal for down operation to lower the window by a certain amount (150mm, 5.91 in)

INITIALIZATION

Perform the initialization when the following operations are performed or when the auto up operation is not performed. Refer to GW-63 (Front door), GW-68 (Rear door).

- When the power supply to the power window main switch, power window sub-switch or each power window motor is cut off by the removal of battery terminal or the battery fuse is blown.
- Disconnection and connection of power window main switch or each power window sub-switch harness connector.
- Removal and installation of regulator assembly.
- Removal and installation of motor from regulator assembly.
- Operation of regulator assembly as an independent unit.
- Removal and installation of glass.
- Removal and installation of door glass run.

  CAUTION:
  The following operations are not performed under the condition that the initialization is not performed yet.

- Auto up operation
- Anti-pinch function
- Key cylinder switch close operation

FAIL-SAFE CONTROL

The encoder signal detects the up / down speed / detection of door glass. If the malfunction is detected to the encoder signal or the difference between the glass fully closed position (memorized in power window main switch or power window sub-switch) and the actual glass position is detected, it shifts into the fail-safe control

DTC	Condition
Pulse sensor detects malfunction	During the glass opening/closing operation, a pulse signal is continuously detected for the specified terms or more
Both pulse sensors detect malfunction	During the glass opening/closing operation, both pulse signals are not detected for the specified values or more
Pulse direction malfunction	The following condition is detected for the specified values or more. The pulse signal (detected during glass open/close operation) detects the opposite direction to the driving direction of power window motor.
Glass recognized position malfunction 1	During the glass opening/closing operation, the difference between the glass fully closed position (memorized in power window main switch or power window sub-switch) and the actual glass position is detected for the specified values or more.
Glass recognized position malfunction 2	During the glass opening/closing operation, a pulse count is detected that is above the glass full stroke
Glass fully closed position not updated malfunction	Continuously perform the glass open/close operation (with the glass not fully closed) at the specified value (approx. 10 time) or more

It is shifts into the fail-safe control, the initialization is not performed and the following function is not activated

- Auto up operation
- Anti-pinch function

It is shifts into the fail-safe control, performed the initialization to resume normal operation condition.

POWER WINDOW CONTROL BY THE KEY CYLINDER SWITCH

When ignition key switch is OFF, front power window can be opened or closed by turning the key cylinder switch UNLOCK / LOCK position more than 1.5 second over condition.

- Power window can be opened as the door key cylinder is kept fully turning to the UNLOCK position.
- Power window can be closed as the door key cylinder is kept fully turning to the LOCK position.

The power window DOWN stops when the following operations are carried out.

- While performing open / close the window, power window is stopped at the position as the door key cylinder is placed on NEUTRAL.
- When the ignition switch is turned ON while the power window DOWN is operated.

CAN Communication System Description

NIS0021H

CAN (Controller Area Network) is a serial communication line for real time application. It is an on-vehicle multiplex communication line with high data communication speed and excellent error detection ability. Many electronic control units are equipped onto a vehicle, and each control unit shares information and links with other control units during operation (not independent). In CAN communication, control units are connected with 2 communication lines (CAN H line, CAN L line) allowing a high rate of information transmission with less wiring. Each control unit transmits/receives data but selectively reads required data only.

CAN Communication Unit

NIS0021I

Refer to LAN-50, "CAN System Specification Chart"

Schematic

NIS0021J

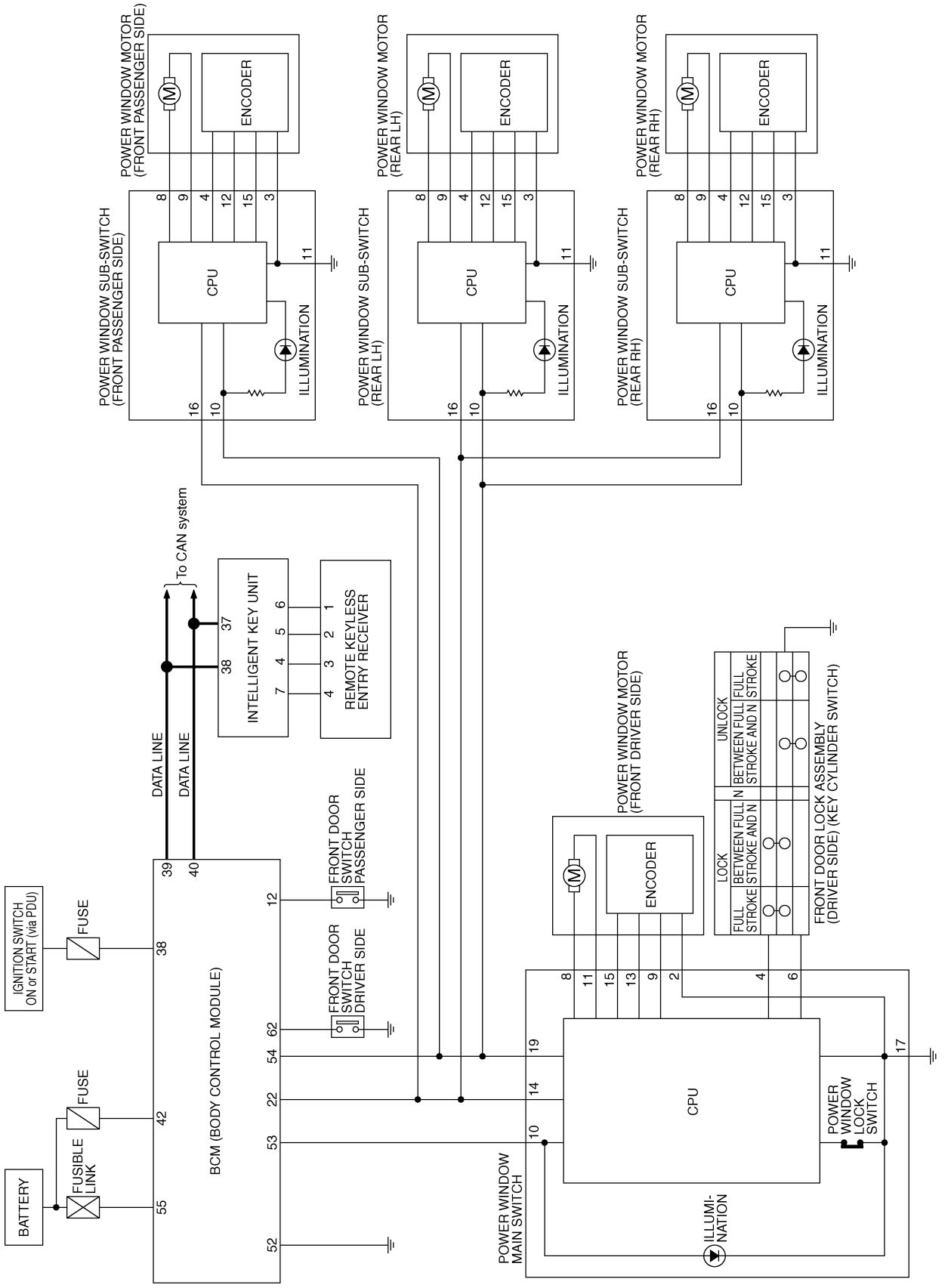

TIWT1344E

Wiring Diagram — WINDOW —

NIS0021K

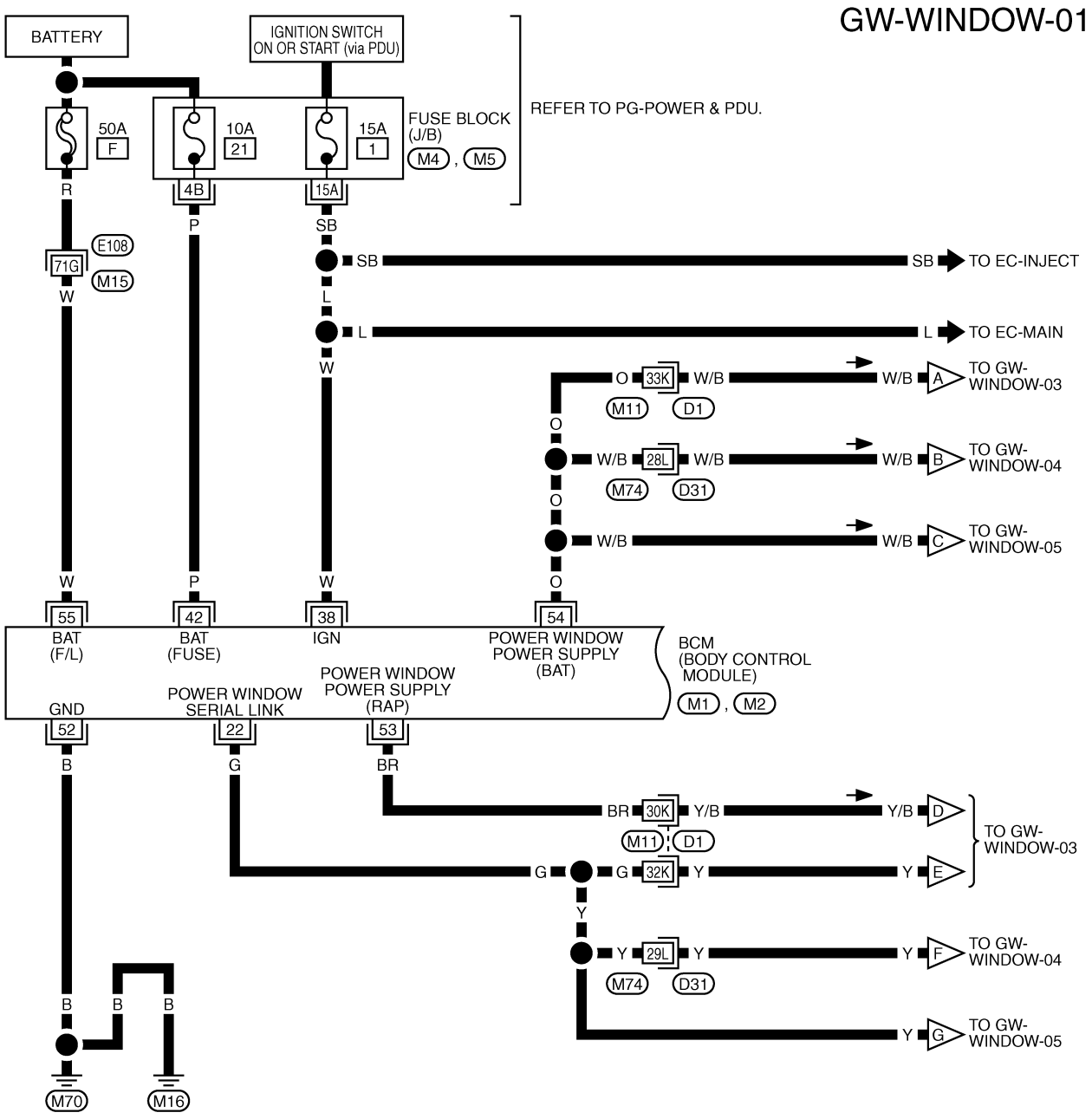

REFER TO THE FOLLOWING.
E108 , D1 , D31 -SUPER MULTIPLE JUNCTION (SMJ)
M4 , M5 -FUSE BLOCK-JUNCTION BOX (J/B)
M1 , M2 -ELECTRICAL UNITS

TIWT2111E

GW-WINDOW-02

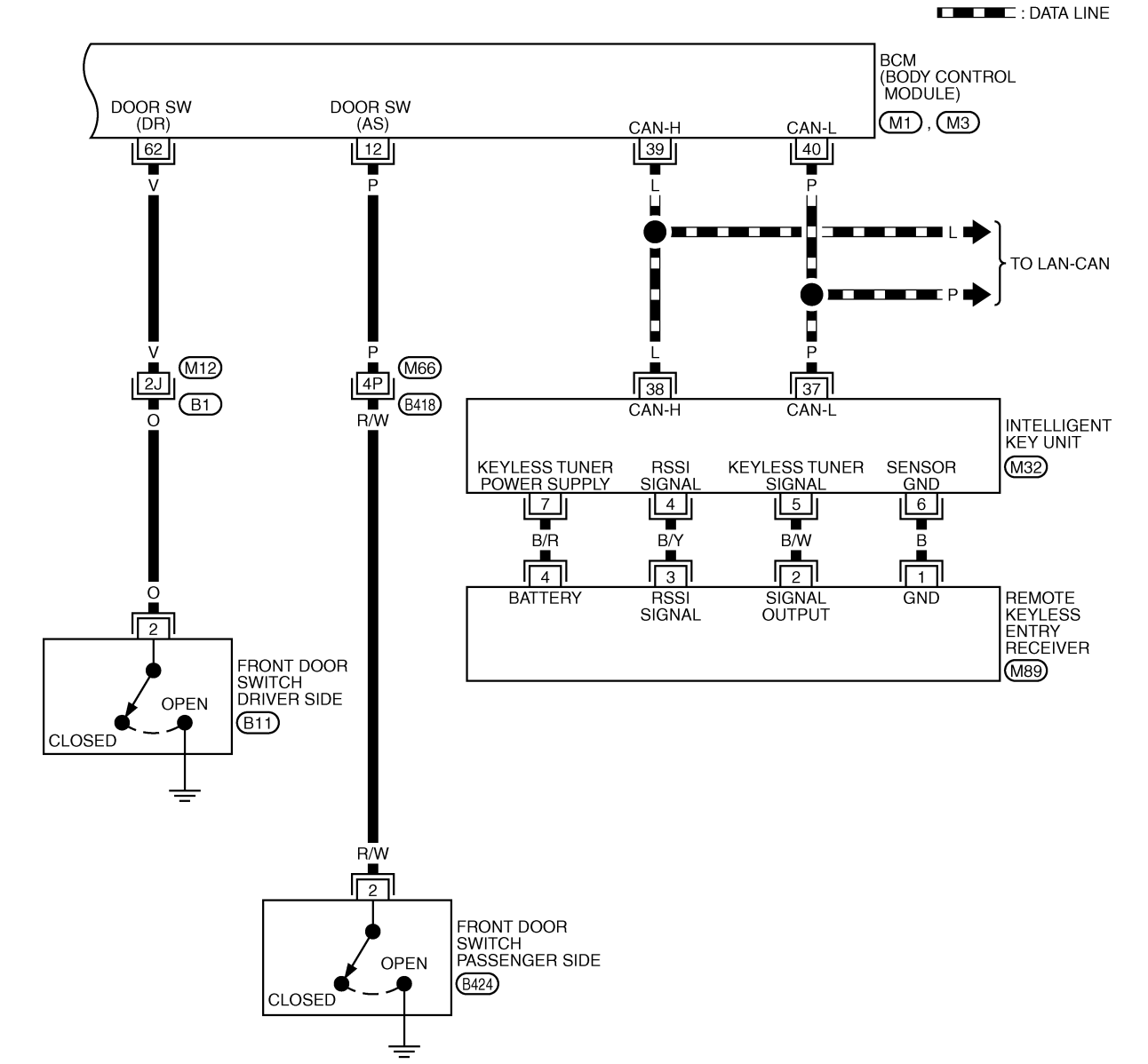

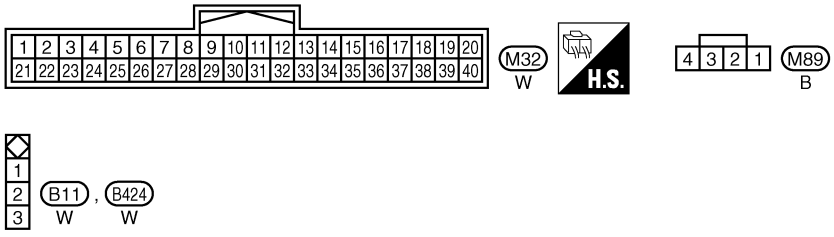

REFER TO THE FOLLOWING.

B1 , B418 -SUPER MULTIPLE JUNCTION (SMJ)

M1 , M3 -ELECTRICAL UNITS

TIWT2112E

GW-WINDOW-03

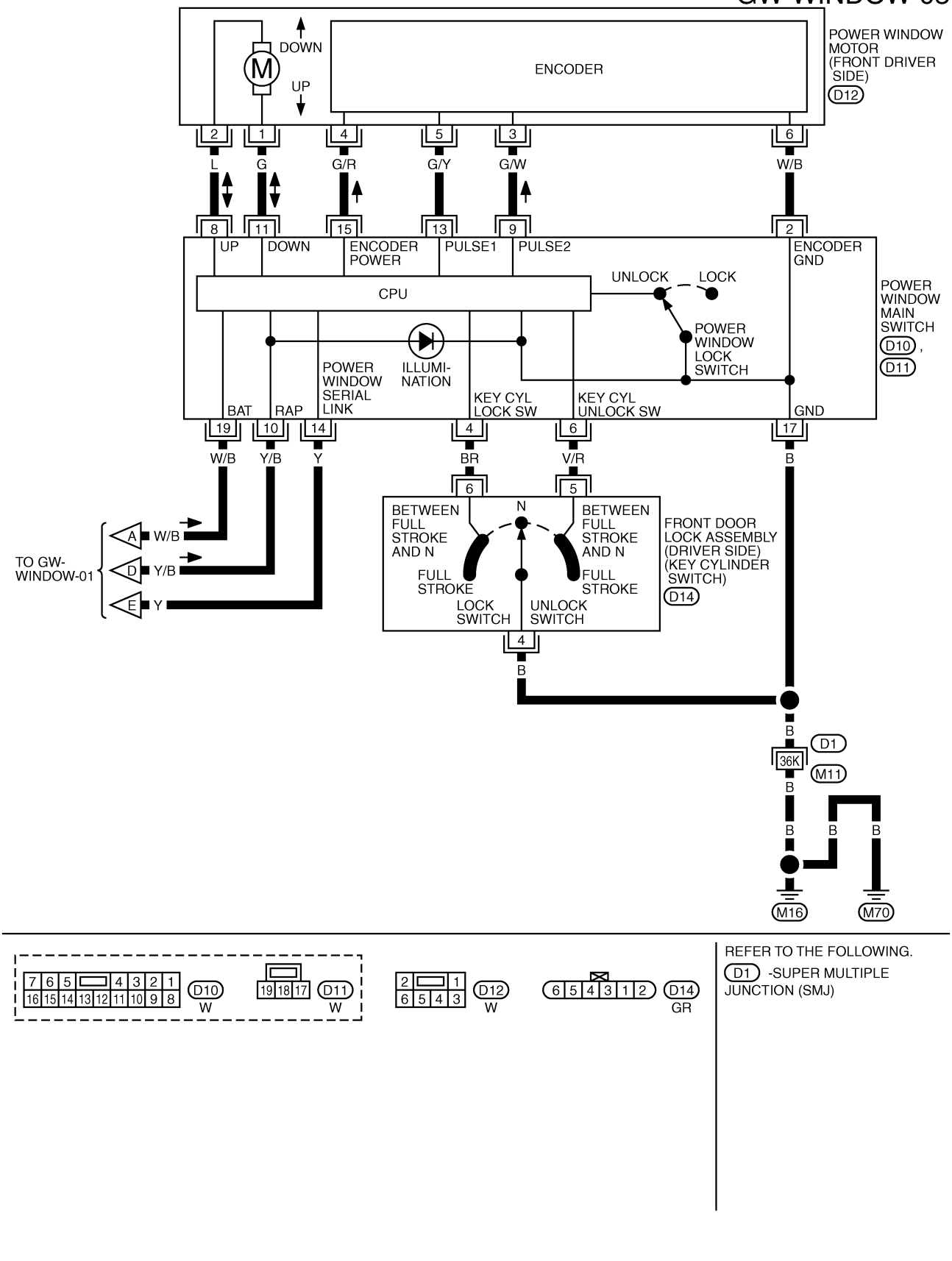

TIWT1347E

GW-WINDOW-04

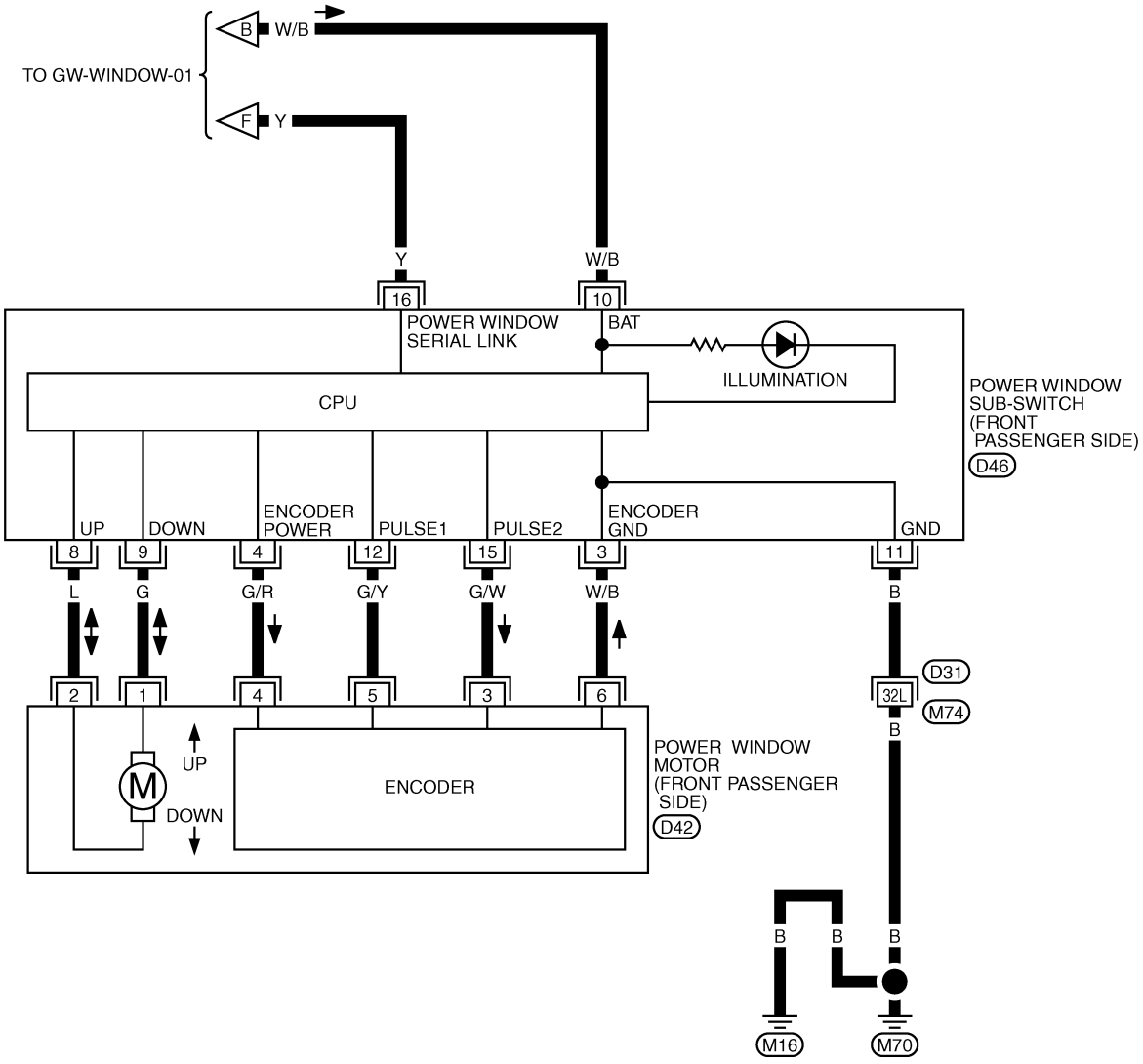

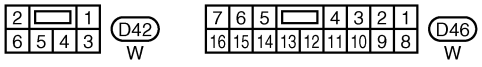

REFER TO THE FOLLOWING.

D31 -SUPER MULTIPLE JUNCTION (SMJ)

TIWT1348E

GW-WINDOW-05

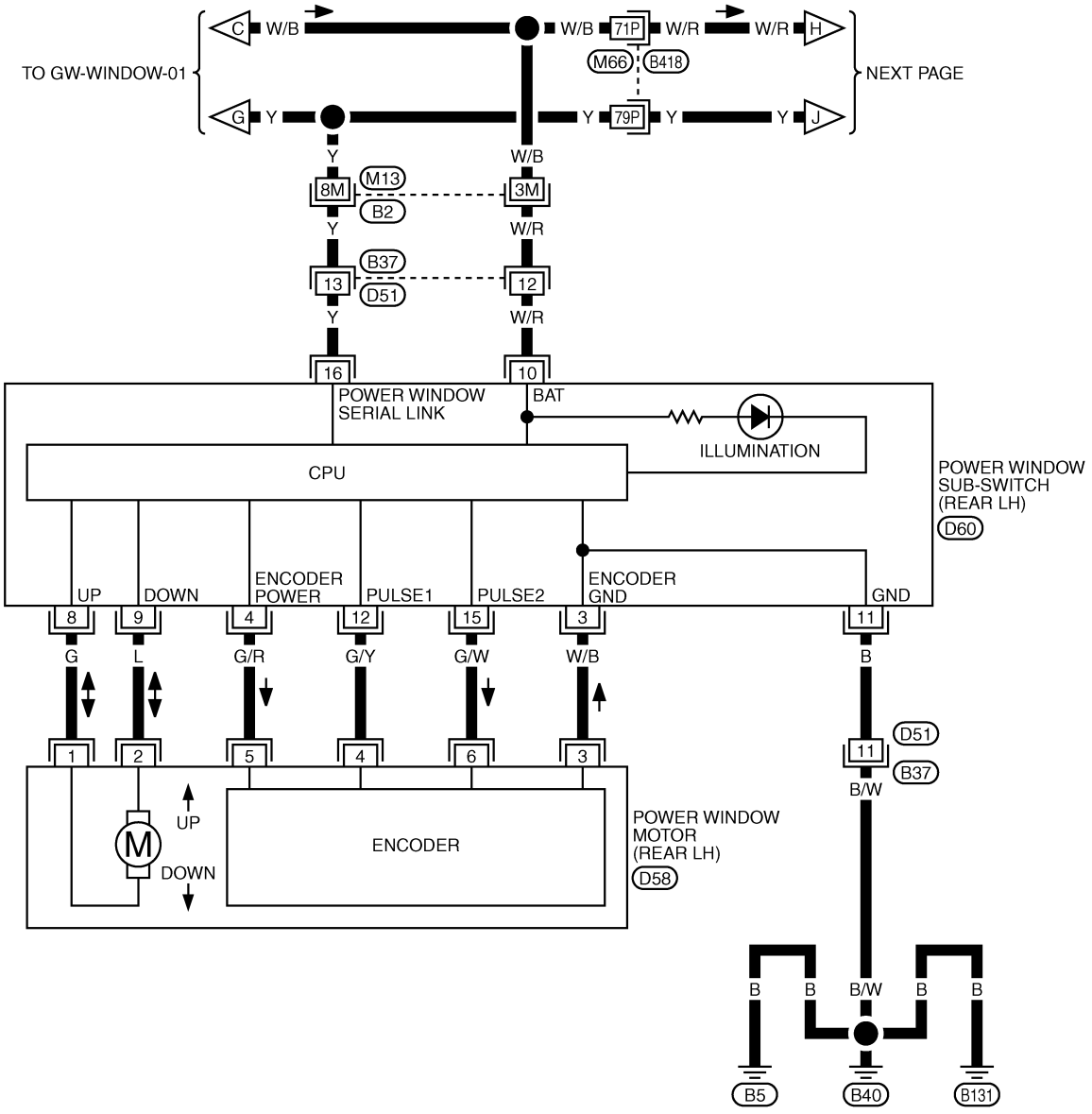

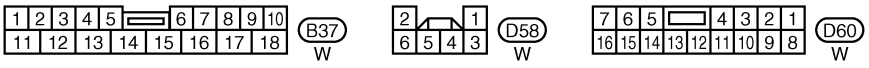

REFER TO THE FOLLOWING.
B2 , B418 -SUPER MULTIPLE JUNCTION (SMJ)

TIWT2036E

GW-WINDOW-06

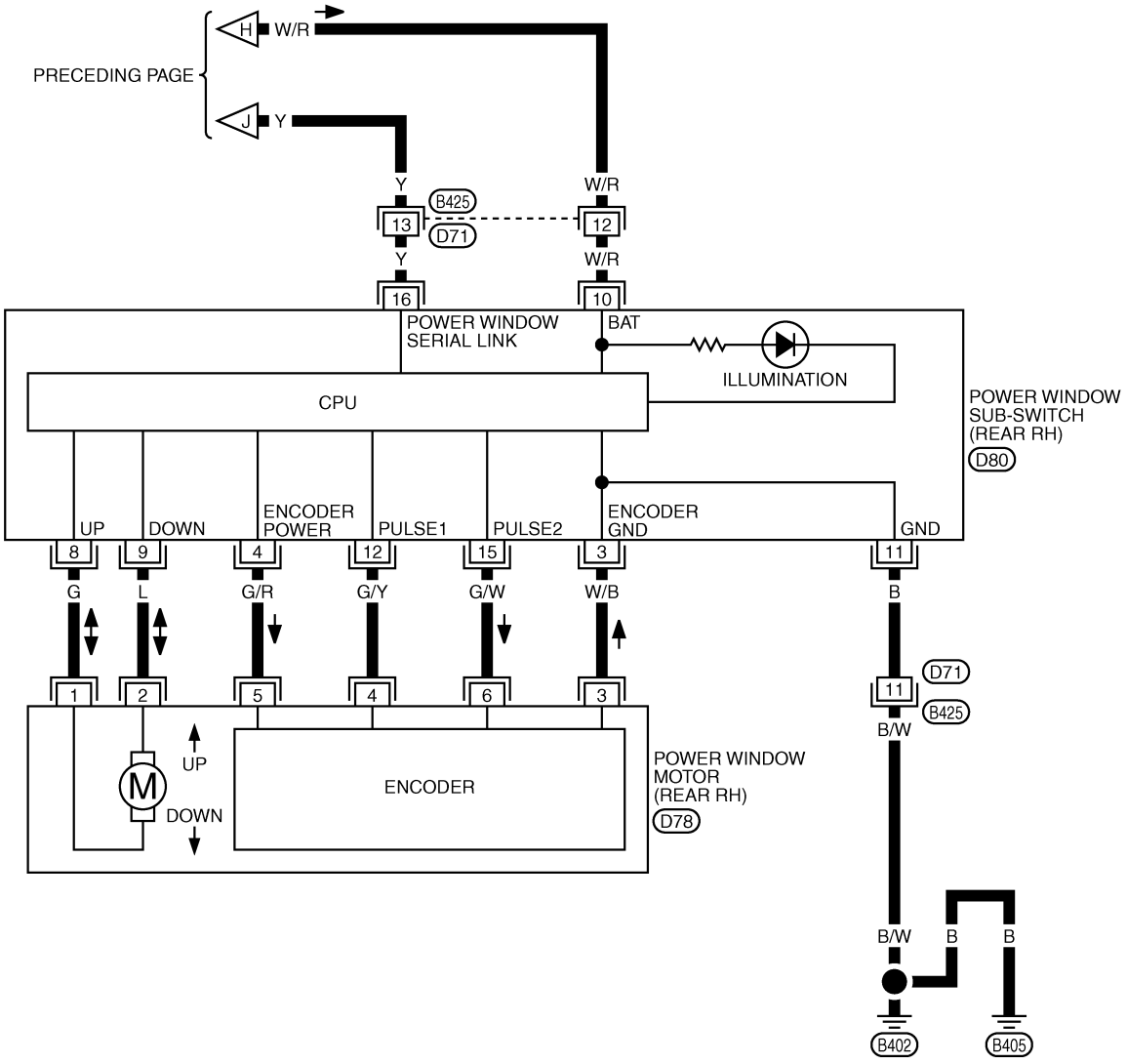

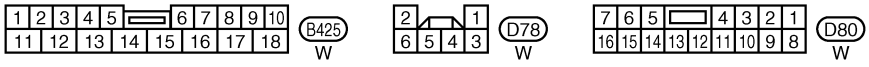

TIWT2037E

Terminal and Reference Value for BCM

NIS0021L

Terminal	Wire color	Item	Signal Input/ Output	Condition	Voltage [V] (Approx.)
12	P	Front door switch passenger side signal	Input	ON (Open)	0
				OFF (Close)	Battery voltage
22	G	Power window serial link	Input/ Output	IGN SW ON or power window timer operating.	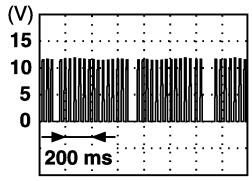 PIIA2344J
38	W	Ignition switch (ON or START)	Input	Ignition switch (ON or START position)	Battery voltage
39	L	CAN - H	Input/ Output	—	—
40	P	CAN - L	Input/ Output	—	—
42	P	Power source (Fuse)	Input	—	Battery voltage
52	B	Ground	—	—	0
53	BR	Rap signal	Output	IGN SW ON	Battery voltage
				Within 45 second after ignition switch is turned to OFF	Battery voltage
				When driver side or passenger side door is opened daring retained power operation	0
54	O	Power window power supply	Output	—	Battery voltage
55	W	Power source (Fusible link)	Input	—	Battery voltage
62	V	Front door switch driver side signal	Input	ON (Open)	0
				OFF (Close)	Battery voltage

Terminal and Reference Value for Power Window Main Switch

NIS0021M

Terminal	Wire color	Item	Signal Input/ Output	Condition	Voltage [V] (Approx.)
2	W/B	Encoder ground	—	—	0
4	BR	Door key cylinder switch LOCK signal	Input	Key position (Neutral → Locked)	5 → 0
6	V/R	Door key cylinder switch UNLOCK signal	Input	Key position (Neutral → Unlocked)	5 → 0
8	L	Front driver side power window motor UP signal	Output	When front LH switch in power window main switch is UP at operated.	Battery voltage
9	G/W	Encoder pulse signal 2	Input	When power window motor operates.	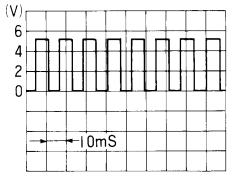 OCC3383D
10	Y/B	Rap signal	Input	IGN SW ON	Battery voltage
				Within 45 second after ignition switch is turned to OFF	Battery voltage
				When driver side or passenger side door is opened daring retained power operation	0
11	G	Front driver side power window motor DOWN signal	Output	When front LH switch in power window main switch is DOWN at operated.	Battery voltage
13	G/Y	Encoder pulse signal 1	Input	When power window motor operates.	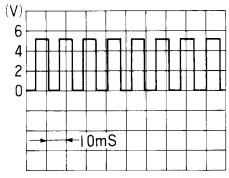 OCC3383D
14	Y	Power window serial link	Input/ Output	IGN SW ON or power window timer operating.	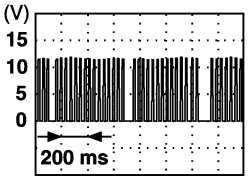 PIIA2344J
15	G/R	Encoder power supply	Output	When ignition switch ON or power window timer operates.	10
17	B	Ground	—	—	0
19	W/B	Battery power supply	Input	—	Battery voltage

Terminal and Reference Value for (Front and Rear) Power Window Sub-Switch

NIS0021N

Terminal	Wire color	Item	Signal Input/ Output	Condition	Voltage [V] (Approx.)
3	W/B	Encoder ground	—	—	0
4	G/R	Encoder power supply	Output	When ignition switch ON or power window timer operates	10
8	L (G)	Power window motor UP signal	Output	When power window motor is UP at operated.	Battery voltage
9	G (L)	Power window motor DOWN signal	Output	When power window motor is DOWN at operated.	Battery voltage
10	W/B (W/R)	Battery power supply	Input	—	Battery voltage
11	B	Ground	—	—	0
12	G/Y	Encoder pulse signal 1	Input	When power window motor operates.	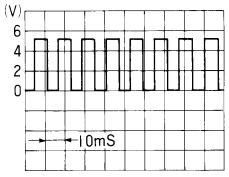 OCC3383D
15	G/W	Encoder pulse signal 2	Input	When power window motor operates.	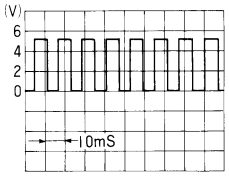 OCC3383D
16	Y	Power window serial link	Input/ Output	IGN SW ON or power window timer operating.	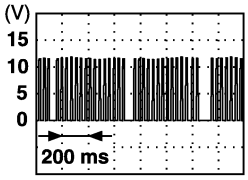 PIIA2344J

(): Power window sub-switch (rear LH or RH)

CONSULT-II Function (BCM)

NIS0021O

CONSULT-II can display each diagnostic item using the diagnostic test modes shown following.

BCM diagnostic test item	Check item diagnostic test mode	Content
RETAINED PWR	Work support	Changes setting of each function.
	Data monitor	Displays the input data of BCM in real time.

CONSULT-II START PROCEDURE

Refer to GI-38, "CONSULT-II Start Procedure"

WORK SUPPORT

Work item	Description
RETAINED PWR	Rap signal's power supply period can be changed by mode setting. Selects rap signal's power supply period between three steps ● MODE1 (45 sec.) / MODE2 (OFF) / MODE 3 (2 min.).

DATE MONITOR

Work item	Description
IGN ON SW	Indicates (ON / OFF) condition of ignition switch
DOOR SW–DR	Indicates (ON / OFF) condition of front door switch driver side
DOOR SW–AS	Indicates (ON / OFF) condition of front door switch passenger side

Work Flow

NIS0021P

1. Check the symptom and customer's requests.
2. Understand the outline of system. Refer to GW-14, "System Description"
3. According to the trouble diagnosis chart, repair or replace the cause of the malfunction.
   Refer to GW-30, "Trouble Diagnosis Symptom Chart"
4. Does power window system operate normally? Yes, GO TO 5, If No, GO TO 3.
5. INSPECTION END

Trouble Diagnosis Symptom Chart

NIS0021Q

- Make sure other systems using the signal of the following systems operate normally.

Symptom	Repair order	Refer to page
None of the power windows can be operated using any switch.	1. Check BCM power supply and ground circuit	GW-32
	2. Check power window main switch power supply and ground circuit	GW-33
	3. Check power window serial link	GW-54
Driver side power window alone does not operate.	1. Check power window motor (front driver side) circuit	GW-36
	2. Replace power window main switch	—
Front passenger side power window alone does not operate.	1. Check power window main switch power supply and ground circuit check	GW-33
	2. Check power window sub-switch (front passenger side) power and ground circuit	GW-34
	3. Check power window serial link	GW-54
	4. Check power window motor (front passenger side) circuit	GW-37
	5. Replace BCM	BCS-15

Symptom	Repair order	Refer to page
Rear LH or RH side power window alone does not operate	1. Check power window sub-switch (rear LH or RH) power and ground circuit	GW-35
	2. Check power window serial link (rear LH or RH)	GW-56
	3. Check power window motor (rear LH or RH) circuit	GW-38
	4. Replace rear power window switch (LH or RH)	—
Anti-pinch system does not operate normally (driver side)	1. Initialization	GW-63
	2. Door window sliding part malfunction ● A foreign material adheres to window glass or glass run rubber. ● Glass run rubber wear or deformation. ● Sash is tilted too much, or no enough.	—
	3. Encoder circuit check (driver side)	GW-40
Anti-pinch system does not operate normally (passenger side)	1. Initialization	GW-63
	2. Door window sliding part malfunction ● A foreign material adheres to window glass or glass run rubber. ● Glass run rubber wear or deformation. ● Sash is tilted too much, or no enough.	—
	3. Encoder circuit check (passenger side)	GW-43
Anti-pinch system does not operate normally (rear LH or RH)	1. Initialization	GW-68
	2. Door window sliding part malfunction ● A foreign material adheres to window glass or glass run rubber. ● Glass run rubber wear or deformation. ● Sash is tilted too much, or no enough.	—
	3. Encoder circuit check (rear LH or RH)	GW-46
Power window retained power operation does not operate properly	1. Check the retained power operation mode setting.	GW-30
	2. Check door switch	GW-50
	3. Replace BCM.	BCS-15
Does not operate by key cylinder switch	1. Initialization	GW-63
	2. Check door key cylinder switch	GW-52
	3. Replace power window main switch	—
Power window lock switch does not function	Check power window lock switch	GW-56
Auto operation does not operate but manual operate normally (driver side)	1. Initialization	GW-63
	2. Check encoder circuit (driver side)	GW-40
	3. Replace power window main switch	—
Auto operation does not operate but manual operate normally (passenger side)	1. Initialization	GW-63
	2. Encoder circuit check (passenger side)	GW-43
	3. Replace front power window switch (passenger side)	—
Auto operation does not operate but manual operate normally (rear LH or RH)	1. Initialization	GW-68
	2. Check encoder circuit (rear LH or RH)	GW-46
	3. Replace rear power window switch (LH or RH)	—

Check BCM Power Supply and Ground Circuit

NIS0021R

1. CHECK FUSE

- Check 15A fuse [No. 1, located in fuse block (J/B)]
- Check 10A fuse [No. 21, located in fuse block (J/B)]
- Check 50A fusible link (letter **F** , located in the fuse and fusible link box).

NOTE:
Refer to GW-14, "Component Parts and Harness Connector Location" .

OK or NG

OK >> GO TO 2.
NG >> If fuse is blown out, be sure to eliminate cause of malfunction before installing new fuse. Refer to PG-3, "POWER SUPPLY ROUTING CIRCUIT" .

2. CHECK POWER SUPPLY CIRCUIT

Check voltage between BCM connector and ground.

Terminals			Condition of ignition switch	Voltage (V) (Approx.)
(+)		(–)		
BCM connector	Terminal			
M1	38	Ground	ON	Battery voltage
M2	42		OFF	
	55			

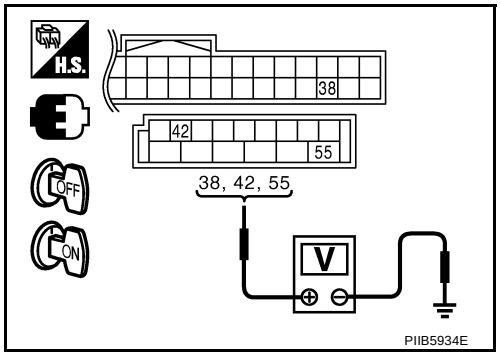

OK or NG

OK >> GO TO 3.
NG >> Check BCM power supply circuit for open or short.

3. CHECK GROUND CIRCUIT

1. Turn ignition switch OFF.
2. Disconnect BCM connector.
3. Check continuity between BCM connector and ground.

BCM connector	Terminal	Ground	Continuity
M2	52		Yes

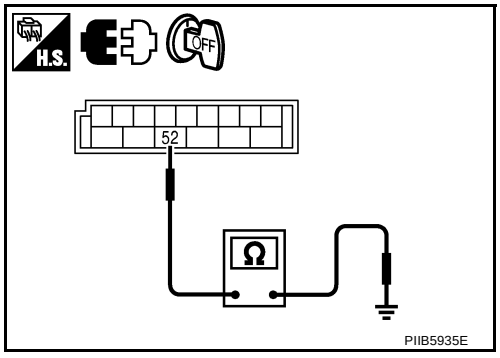

OK or NG

OK >> Power supply and ground circuit are OK.
NG >> Check BCM ground circuit for open or short.

Check power Window Main Switch Power Supply Circuit

NIS0021S

1. CHECK POWER SUPPLY CIRCUIT

1. Turn ignition switch ON.
2. Check voltage between power window main switch connector and ground.

Terminal			Voltage (V) (Approx.)
(+)		(–)	
Power window main switch connector	Terminal		
D10	10	Ground	Battery voltage
D11	19		

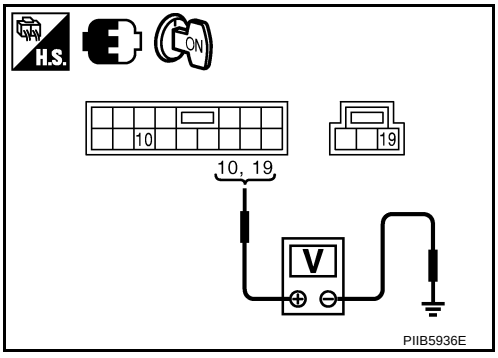

OK or NG

OK >> GO TO 2.
NG >> GO TO 3.

2. CHECK GROUND CIRCUIT

1. Turn ignition switch OFF.
2. Disconnect power window main switch connector.
3. Check continuity between power window main switch connector and ground.

Power window main switch connector	Terminal	Ground	Continuity
D11	17		Yes

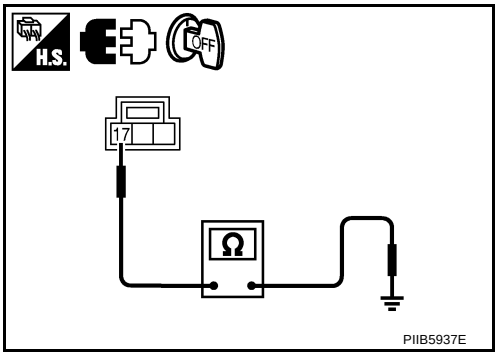

OK or NG

OK >> Power window main switch power supply and ground circuit are OK.
NG >> Repair or replace harness.

3. CHECK HARNESS CONTINUITY

1. Disconnect BCM and power window main switch connector.
2. Check continuity between BCM connector and power window main switch connector.

A		B		Continuity
BCM connector	Terminal	Power window main switch connector	Terminal	
M2	53	D10	10	Yes
	54	D11	19	

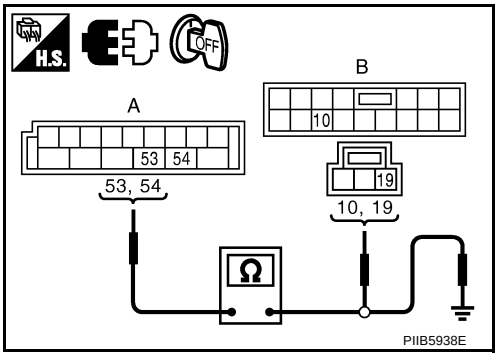

3. Check continuity between BCM connector and ground.

A		Ground	Continuity
BCM connector	Terminal		
M2	53		No
	54		

OK or NG

OK >> GO TO 4.
NG >> Repair or replace harness.

4. CHECK BCM OUTPUT SIGNAL

1. Connect BCM connector.
2. Turn ignition switch ON.
3. Check voltage between BCM connector and ground.

Terminals			Voltage (V) (Approx.)
(+)		(–)	
BCM connector	Terminal		
M2	53	Ground	Battery voltage
	54		

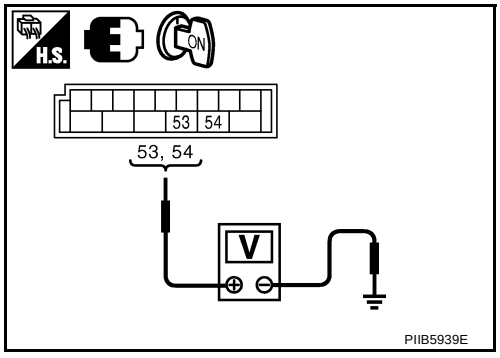

OK or NG

OK >> Check condition of harness and connector.
NG >> Replace BCM.

Check power Window Sub-Switch (Front Passenger Side) Power Supply and Ground Circuit

NIS0021T

1. CHECK POWER SUPPLY CIRCUIT

1. Turn ignition switch OFF.
2. Check voltage between power window sub-switch (front passenger side) connector and ground

Terminal			Voltage (V) (Approx.)
(+)		(–)	
Power window sub-switch (front passenger side) connector	Terminal		
D46	10	Ground	Battery voltage

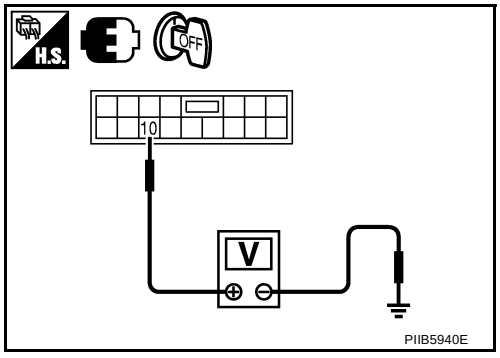

OK or NG

OK >> GO TO 2.
NG >> GO TO 3.

2. CHECK GROUND CIRCUIT

1. Disconnect power window sub-switch (front passenger side) connector.
2. Check continuity between power window sub-switch (front passenger side) connector and ground.

Power window sub-switch (front passenger side) connector	Terminal	Ground	Continuity
D46	11		Yes

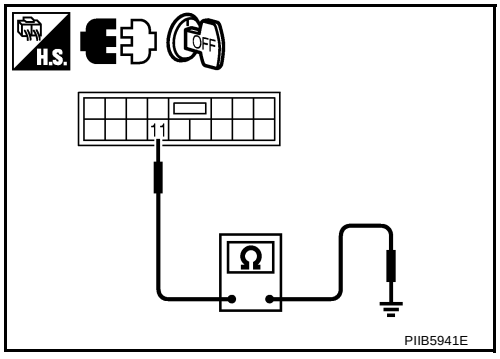

OK or NG

OK >> Power window sub-switch (front passenger side) power supply and ground circuit are OK.
NG >> Repair or replace harness.

3. CHECK HARNESS CONTINUITY

1. Disconnect BCM and power window sub-switch (front passenger side) connector.
2. Check continuity between BCM connector and power window sub-switch (front passenger side) connector.

A		B		Continuity
BCM connector	Terminal	Power window sub-switch (front passenger side) connector	Terminal	
M2	54	D46	10	Yes

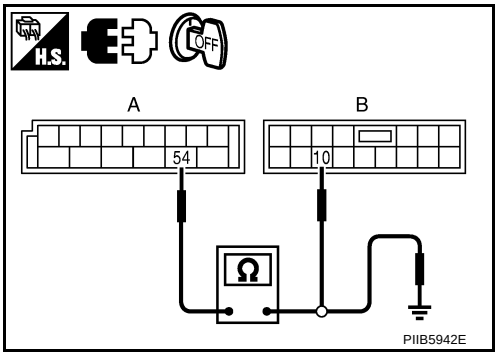

3. Check continuity between BCM connector and ground.

A		Ground	Continuity
BCM connector	Terminal		
M2	54		No

OK or NG

OK >> Check condition of harness and connector.
NG >> Repair or replace harness.

Check power Window Sub-Switch (Rear LH or RH) Power Supply and Ground Circuit

NIS0021U

1. CHECK POWER SUPPLY

1. Turn ignition switch OFF.
2. Check voltage between power window sub-switch (rear LH or RH) connector and ground.

Terminal			Voltage (V) (Approx.)
(+)		(–)	
Power window sub-switch (rear LH or RH) connector	Terminal		
D60 (LH) D80 (RH)	10	Ground	Battery voltage

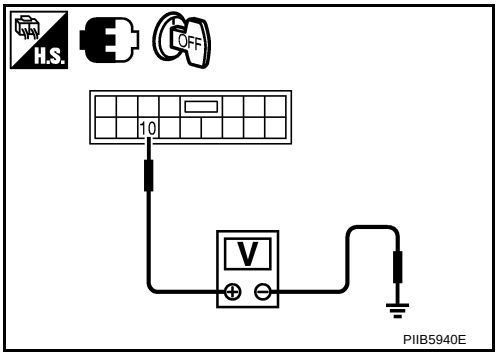

OK or NG

OK >> GO TO 2.
NG >> GO TO 3.

2. CHECK GROUND CIRCUIT

1. Disconnect power window sub-switch (rear LH or RH) connector.
2. Check continuity between power window sub-switch (rear LH or RH) connector and ground.

Power window sub-switch (rear LH or RH) connector	Terminal	Ground	Continuity
D60 (LH) D80 (RH)	11		Yes

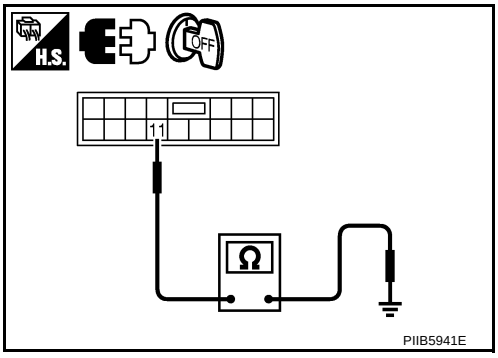

OK or NG

OK >> Power window sub-switch (rear LH or RH) power supply and ground circuit are OK. Refer to symptom chart.
NG >> Repair or replace harness.

3. CHECK HARNESS CONTINUITY

1. Disconnect BCM and power window sub-switch (rear LH or RH) connector.
2. Check continuity between BCM connector and power window sub-switch (rear LH or RH) connector.

A		B		Continuity
BCM connector	Terminal	Power window sub-switch (rear LH or RH) connector	Terminal	
M2	54	D60 (LH) D80 (RH)	10	Yes

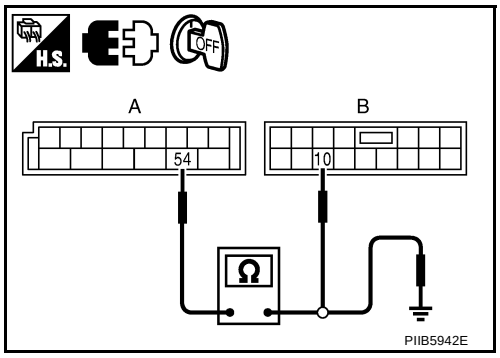

3. Check continuity between BCM connector and ground.

A		Ground	Continuity
BCM connector	Terminal		
M2	54		No

OK or NG

OK >> Check condition of harness and connector.
NG >> Repair or replace harness.

Check power Window Motor (Front Driver Side) Circuit

NIS0021V

1. CHECK POWER WINDOW MAIN SWITCH OUTPUT SIGNAL

1. Turn ignition switch ON.
2. Check voltage between power window main switch connector and ground.

Terminal			Window Condition	Voltage (V) (Approx.)
(+)		(–)		
Power window main switch connector	Terminal			
D10	8	Ground	UP	Battery voltage
			DOWN	0
	11		UP	0
			DOWN	Battery voltage

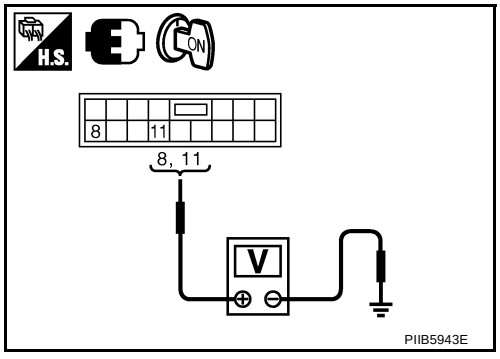

OK or NG

OK >> GO TO 2.
NG >> Replace power window main switch.

2. CHECK HARNESS CONTINUITY

1. Turn ignition switch OFF.
2. Disconnect power window main switch and power window motor (front driver side) connector.
3. Check continuity between power window main switch connector and power window motor (front driver side).

A		B		Continuity
Power window main switch connector	Terminal	Power window motor (front driver side) connector	Terminal	
D10	8	D12	2	Yes
	11		1	

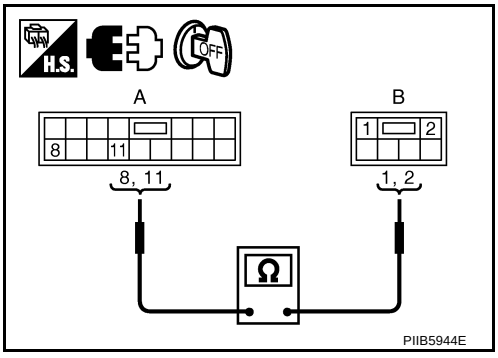

OK or NG

OK >> Replace power window motor (front driver side).
NG >> Repair or replace harness.

Check power Window Motor (Front Passenger Side) Circuit

NIS0021W

1. CHECK POWER WINDOW SUB-SWITCH (FRONT PASSENGER SIDE) OUTPUT SIGNAL

1. Turn ignition switch ON.
2. Check voltage between power window sub-switch (front passenger side) connector and ground.

Terminal			Window condition	Voltage (V) (Approx.)
(+)		(–)		
Power window sub-switch (front passenger side) connector	Terminal			
D46	8	Ground	UP	Battery voltage
			DOWN	0
	9		UP	0
			DOWN	Battery voltage

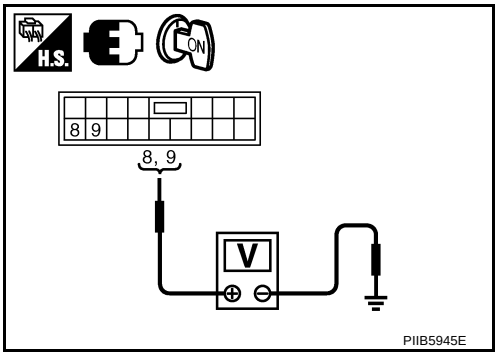

OK or NG

OK >> GO TO 2.
NG >> Replace front power window sub-switch (front passenger side).

2. CHECK HARNESS CONTINUITY

1. Turn ignition switch OFF.
2. Disconnect power window sub-switch (front passenger side) and power window motor (front passenger side) connector.
3. Check continuity between power window sub-switch (front passenger side) connector and power window motor (front passenger side) connector.

A		B		Continuity
Power window sub-switch (front passenger side) connector	Terminal	Power window motor (front passenger side) connector	Terminal	
D46	8	D42	2	Yes
	9		1	

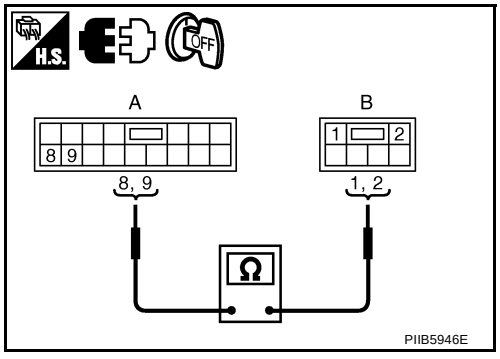

OK or NG

OK >> Replace power window motor (front passenger side).
NG >> Repair or replace harness.

Check power Window Motor (Rear LH or RH) Circuit

NIS0021X

1. CHECK POWER WINDOW SUB-SWITCH REAR OUTPUT SIGNAL

1. Turn ignition switch ON.
2. Check voltage between power window sub-switch (rear LH or RH) connector and ground.

Terminal			Window condition	Voltage (V) (Approx.)
(+)		(–)		
Power window sub-switch (rear LH or RH) connector	Terminal			
D60 (LH) D80 (RH)	8	Ground	UP	Battery voltage
			DOWN	0
	9		UP	0
			DOWN	Battery voltage

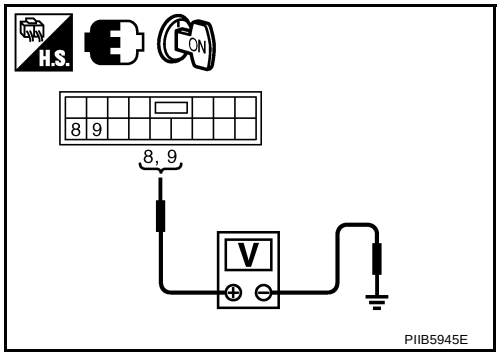

OK or NG

OK >> GO TO 2.
NG >> Replace power window sub-switch (rear LH or RH).

2. CHECK HARNESS CONTINUITY

1. Turn ignition switch OFF.
2. Disconnect power window sub-switch (rear LH or RH) and power window motor (rear LH or RH) connector.
3. Check continuity between power window sub-switch (rear LH or RH) connector and power window motor (rear LH or RH) connector.

A		B		Continuity
Power window sub-switch (rear LH or RH) connector	Terminal	Power window motor (rear LH or RH) connector	Terminal	
D60 (LH) D80 (RH)	8	D58 (LH) D78 (RH)	1	Yes
	9		2	

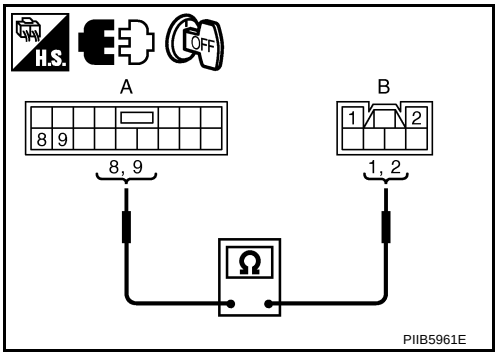

OK or NG

OK >> Replace power window motor (rear LH or RH).
NG >> Repair or replace harness.

Check encoder Circuit (Driver Side)

NIS0021Y

1. CHECK POWER WINDOW MOTOR (FRONT DRIVER SIDE) POWER SUPPLY

1. Turn ignition switch ON.
2. Check voltage between power window motor (front driver side) connector and ground.

Terminal			Voltage (V) (Approx.)
(+)		(–)	
Power window motor (front driver side) connector	Terminal		
D12	4	Ground	10

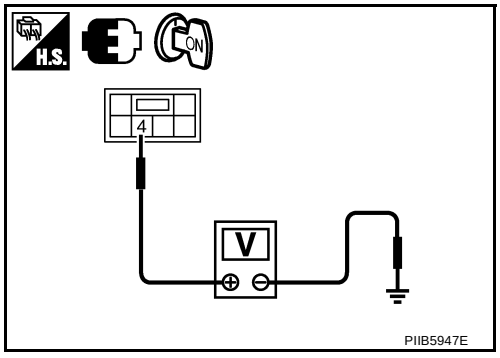

OK or NG

OK >> GO TO 3.
NG >> GO TO 2.

2. CHECK HARNESS CONTINUITY 1

1. Turn ignition switch OFF.
2. Disconnect power window main switch and power window motor (front driver side).
3. Check continuity between power window main switch connector and power window motor (front driver side) connector.

A		B		Continuity
Power window main switch connector	Terminal	Power window motor (front driver side) connector	Terminal	
D10	15	D12	4	Yes

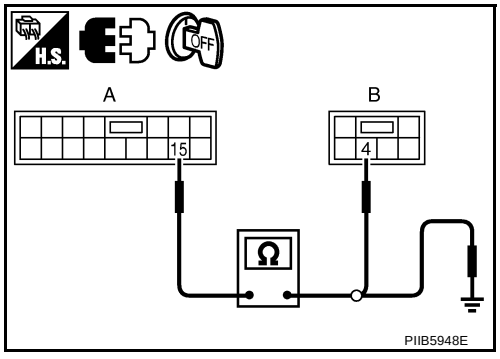

4. Check continuity between power window main switch connector and ground.

A		Ground	Continuity
Power window main switch connector	Terminal		
D10	15		No

OK or NG

OK >> Replace power window main switch.
NG >> Repair or replace harness.

3. CHECK GROUND CIRCUIT

1. Turn ignition switch OFF.
2. Disconnect power window motor (front driver side) connector.
3. Check continuity between power window motor (front driver side) connector and ground.

Power window motor (front driver side) connector	Terminal	Ground	Continuity
D12	6		Yes

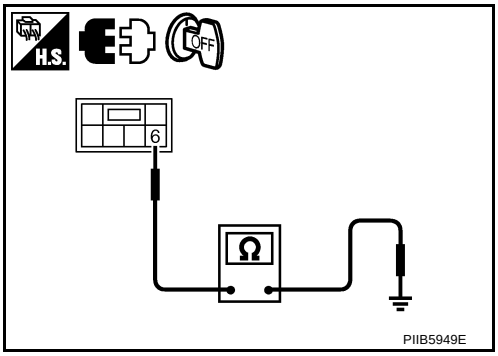

OK or NG

OK >> GO TO 5.
NG >> GO TO 4.

4. CHECK HARNESS CONTINUITY 2

1. Disconnect power window main switch connector.
2. Check continuity between power window main switch connector and power window motor (front driver side) connector.

A		B		Continuity
Power window main switch connector	Terminal	Power window motor (front driver side) connector	Terminal	
D10	2	D12	6	Yes

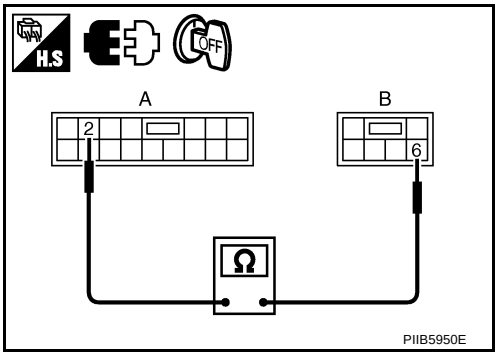

OK or NG

OK >> Replace power window main switch.
NG >> Repair or replace harness.

5. CHECK ENCODER SIGNAL

1. Connect power window motor (front driver side) connector.
2. Turn ignition switch ON.
3. Check signal between power window main switch connector and ground with oscilloscope.

Terminals			Signal (Reference value)
(+)		(–)	
Power window main switch connector	Terminal		
D10	9	Ground	Refer to following signal
	13		

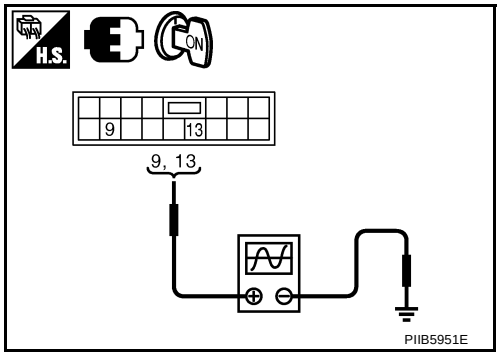

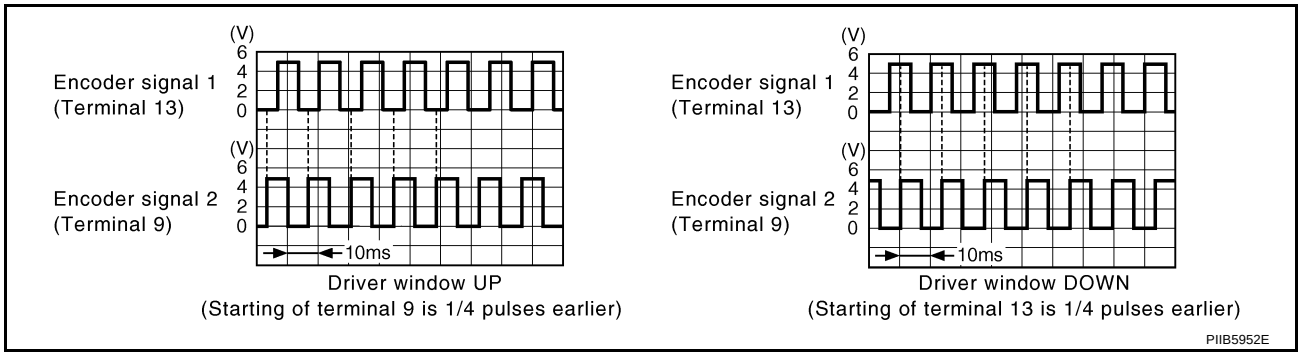

OK or NG

OK >> Replace power window main switch.
NG >> GO TO 6.

6. CHECK HARNESS CONTINUITY 3

1. Turn ignition switch OFF.
2. Disconnect power window main switch and power window motor (front driver side) connector.
3. Check continuity between power window main switch connector and power window motor (front driver side) connector.

A		B		Continuity
Power window main switch connector	Terminal	Power window motor (front driver side) connector	Terminal	
D10	9	D12	3	Yes
	13		5	

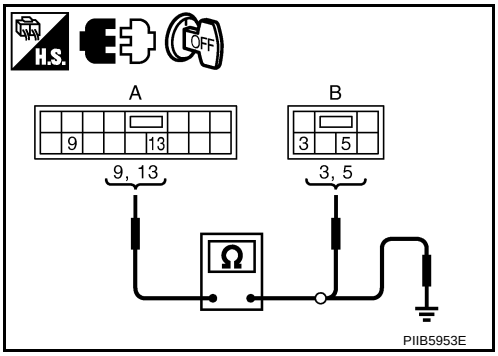

4. Check continuity between power window main switch connector and ground.

A		Ground	Continuity
Power window main switch connector	Terminal		
D10	9		No
	13		

OK or NG

OK >> Replace power window motor (front driver side).
NG >> Repair or replace harness.

Check encoder Circuit (Passenger Side)

NIS0021Z

1. CHECK POWER WINDOW MOTOR (FRONT PASSENGER SIDE) POWER SUPPLY

1. Turn ignition switch ON.
2. Check voltage between power window motor (front passenger side) connector and ground.

Terminal			Voltage (V) (Approx.)
(+)		(–)	
Power window motor (front passenger side) connector	Terminal		
D42	4	Ground	10

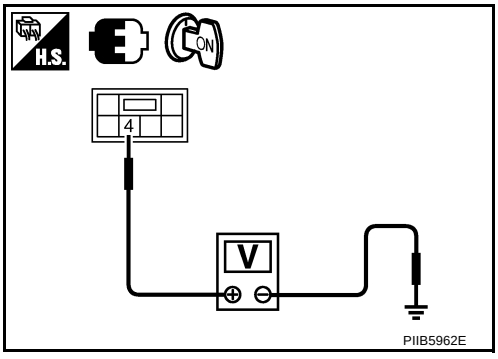

OK or NG

OK >> GO TO 3.
NG >> GO TO 2.

2. CHECK HARNESS CONTINUITY 1

1. Turn ignition switch OFF.
2. Disconnect power window sub-switch (front passenger side) and power window motor (front passenger side) connector.
3. Check continuity between power window sub-switch (front passenger side) connector and power window motor (front passenger side) connector.

A		B		Continuity
Power window sub-switch (front passenger side) connector	Terminal	Power window motor (front passenger side) connector	Terminal	
D46	4	D42	4	Yes

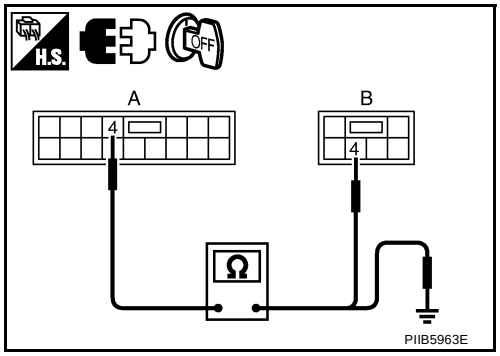

4. Check continuity between power window sub-switch (front passenger side) connector and ground.

A		Ground	Continuity
Power window sub-switch (front passenger side) connector	Terminal		
D46	4		No

OK or NG

OK >> Replace power window sub-switch (front passenger side).
NG >> Repair or replace harness.

3. CHECK GROUND CIRCUIT

1. Turn ignition switch OFF.
2. Disconnect power window motor (front passenger side) connector.
3. Check continuity between power window motor (front passenger side) connector and ground.

Power window motor (front passenger side) connector	Terminal	Ground	Continuity
D42	6		Yes

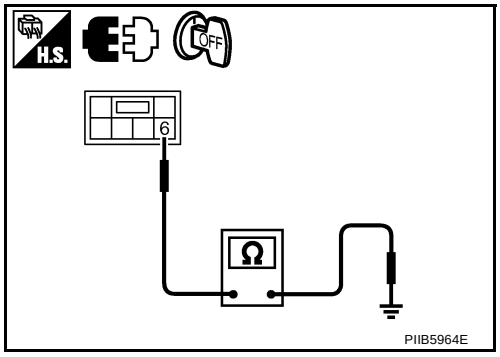

OK or NG

OK >> GO TO 5.
NG >> GO TO 4.

4. CHECK HARNESS CONTINUITY 2

1. Disconnect power window sub-switch (front passenger side) connector.
2. Check continuity between power window sub-switch (front passenger side) connector power window motor (front passenger side) connector.

A		B		Continuity
Power window sub- switch (front passenger side) connector	Terminal	Power window motor (front passenger side) connector	Terminal	
D46	3	D42	6	Yes

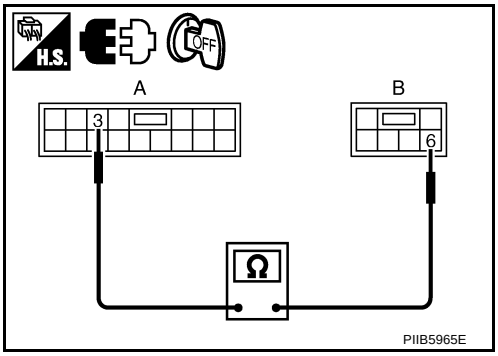

OK or NG

OK >> Replace power window sub-switch (front passenger side).

NG >> Repair or replace harness.

5. CHECK ENCODER SIGNAL

1. Connect power window motor (front passenger side) connector.
2. Turn ignition switch ON.
3. Check signal between power window sub-switch (front passenger side) connector and ground with oscilloscope.

Terminal			Signal (Reference value)
(+)		(–)	
Power window sub-switch (front passenger side) connector	Terminal		
D46	12	Ground	Refer to following signal
	15		

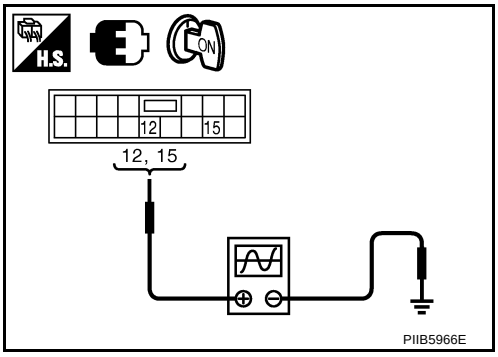

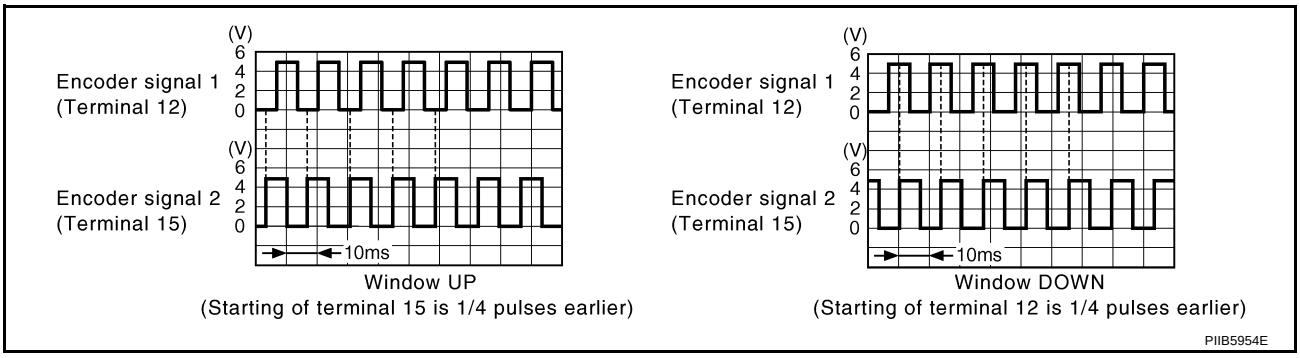

OK or NG

OK >> Replace power window sub-switch (front passenger side).

NG >> GO TO 6.

6. CHECK HARNESS CONTINUITY 3

1. Turn ignition switch OFF.
2. Disconnect power window sub-switch (front passenger side) and power window motor (front passenger side) connector.
3. Check continuity between power window sub-switch (front passenger side) connector and power window motor (front passenger side) connector.

A		B		Continuity
Power window sub- switch (front passenger side) connector	Terminal	Power window motor (front passenger side) connector	Terminal	
D46	12	D42	5	Yes
	15		3	

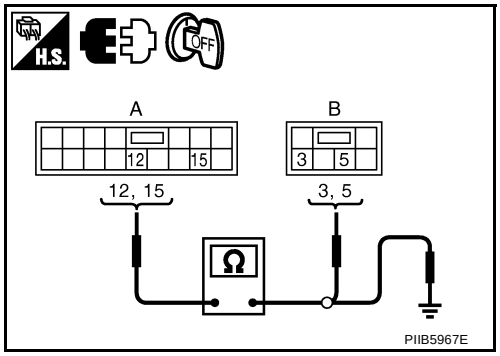

4. Check continuity between power window sub-switch (front passenger side) connector and power window motor (front passenger side) connector.

A		Ground	Continuity
Power window sub-switch (front passenger side) connector	Terminal		
D46	12		No
	15		

OK or NG

OK >> Replace power window motor (front passenger side).
NG >> Repair or replace harness.

Check encoder Circuit (Rear LH or RH)

NIS00220

1. CHECK POWER WINDOW MOTOR (REAR LH OR RH) POWER SUPPLY

1. Turn ignition switch ON.
2. Check voltage between power window motor (rear LH or RH) connector and ground.

Terminal			Voltage (V) (Approx.)
(+)		(–)	
Power window motor (rear LH or RH) connector	Terminal		
D58 (LH) D78 (RH)	5	Ground	10

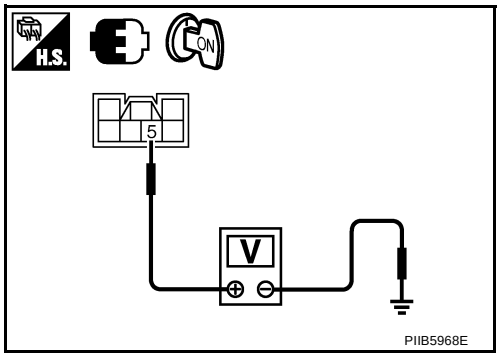

OK or NG

OK >> GO TO 3.
NG >> GO TO 2.

2. CHECK HARNESS CONTINUITY 1

1. Turn ignition switch OFF.
2. Disconnect power window sub-switch (rear LH or RH) and power window motor (rear LH or RH) connector.
3. Check continuity between power window sub-switch (rear LH or RH) connector and power window motor (rear LH or RH) connector.

A		B		Continuity
Power window sub- switch (rear LH or RH) connector	Terminal	Power window motor (rear LH or RH) connector	Terminal	
D60 (LH) D80 (RH)	4	D58 (LH) D78 (RH)	5	Yes

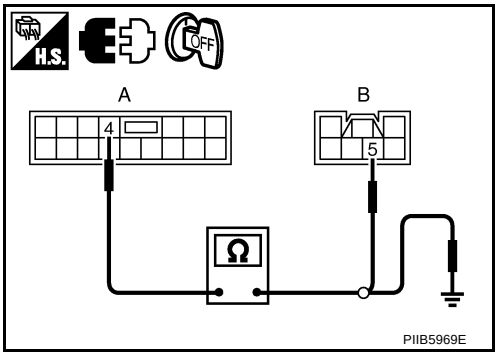

4. Check continuity between power window sub-switch (rear LH or RH) connector and ground.

A		Ground	Continuity
Power window sub- switch (rear LH or RH) connector	Terminal		
D60 (LH) D80 (RH)	4		No

OK or NG

OK >> Replace power window sub-switch (rear LH or RH).
NG >> Repair or replace harness.

3. CHECK GROUND CIRCUIT

1. Turn ignition switch OFF.
2. Disconnect power window motor (rear LH or RH) connector.
3. Check continuity between power window motor (rear LH or RH) connector and ground.

Power window motor (rear LH or RH) connector	Terminal	Ground	Continuity
D58 (LH) D78 (RH)	3		Yes

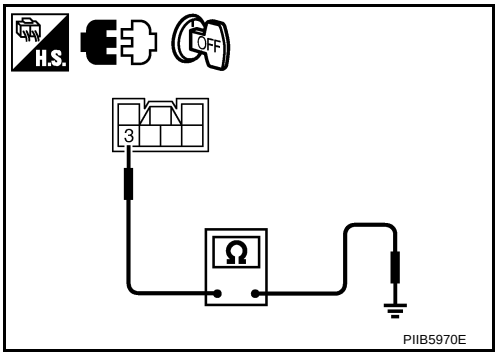

OK or NG

OK >> GO TO 5.
NG >> GO TO 4.

4. CHECK HARNESS CONTINUITY 2

1. Disconnect power window sub-switch (rear LH or RH) connector.
2. Check continuity between power window sub-switch (rear LH or RH) connector and power window motor (rear LH or RH) connector.

A		B		Continuity
Power window sub- switch (rear LH or RH) connector	Terminal	Power window motor (rear LH or RH) connector	Terminal	
D60 (LH) D80 (RH)	3	D58 (LH) D78 (RH)	3	Yes

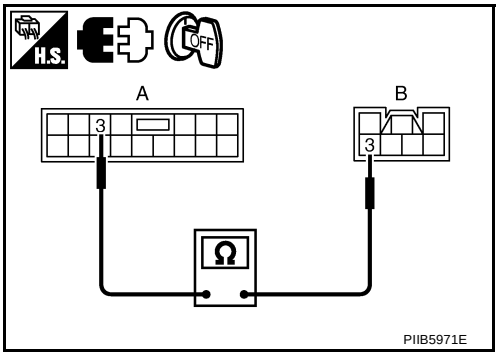

OK or NG

OK >> Replace power window sub-switch (rear LH or RH).
NG >> Repair or replace harness.

5. CHECK ENCODER SIGNAL

1. Connect power window motor (rear LH or RH) connector.
2. Turn ignition switch ON.
3. Check signal between power window sub-switch (rear LH or RH) connector and ground with oscilloscope.

Terminals			Signal (Reference value)
(+)		(–)	
Power window sub- switch (rear LH or RH) connector	Terminal		
D60 (LH) D80 (RH)	12	Ground	Refer to following signal
	15		

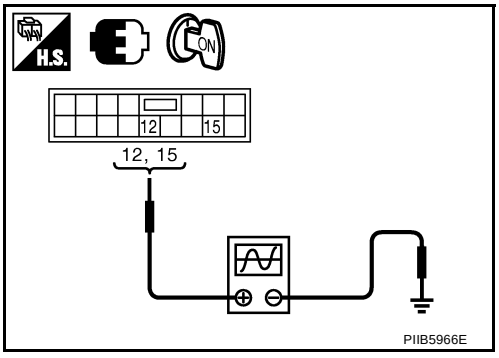

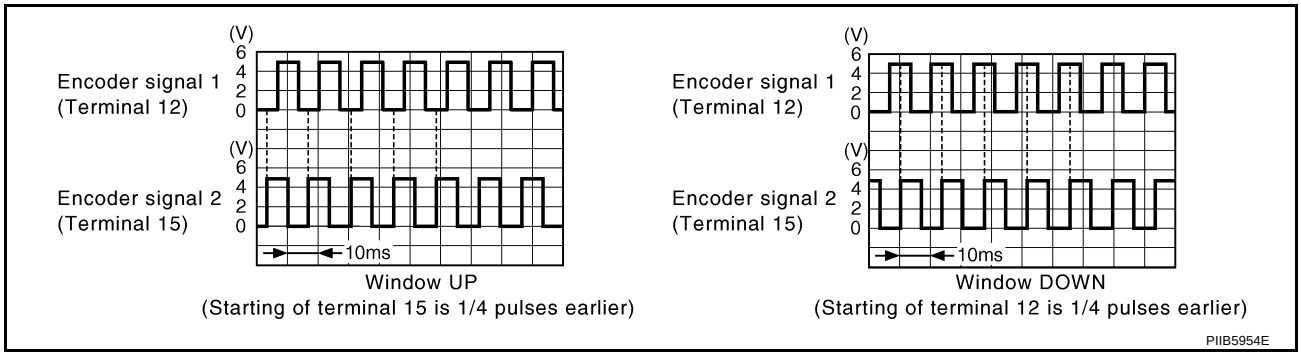

OK or NG

OK >> Replace power window sub-switch (rear LH or RH).
NG >> GO TO 6.

6. CHECK HARNESS CONTINUITY 3

1. Turn ignition switch OFF.
2. Disconnect power window sub-switch (rear LH or RH) and power window motor (rear LH or RH) connector.
3. Check continuity between power window sub-switch (rear LH or RH) connector and power window motor (rear LH or RH) connector.

A		B		Continuity
Power window sub- switch (rear LH or RH) connector	Terminal	Power window motor (rear LH or RH) connector	Terminal	
D60 (LH) D80 (RH)	12	D58 (LH) D78 (RH)	4	Yes
	15		6	

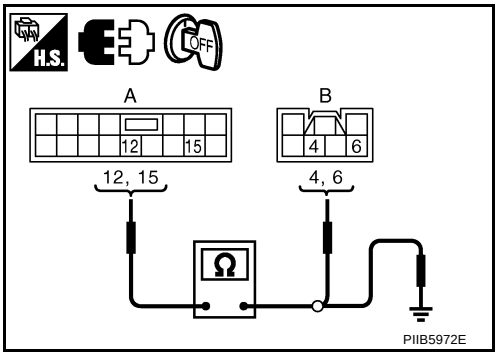

4. Check power window sub-switch (rear LH or RH) connector and ground.

A		Ground	Continuity
Power window sub- switch (rear LH or RH) connector	Terminal		
D60 (LH) D80 (RH)	12		No
	15		

OK or NG

OK >> Replace power window motor (rear LH or RH).
NG >> Repair or replace harness.

Check door Switch

NIS00221

1. CHECK DOOR SWITCH INPUT SIGNAL

With CONSULT-II

Check (“DOOR SW-DR” and “DOOR SW-AS”) in “DATA MONITOR” mode with CONSULT-II.

Monitor item	Condition	
DOOR SW-DR	OPEN	: ON
	CLOSE	: OFF
DOOR SW-AS	OPEN	: ON
	CLOSE	: OFF

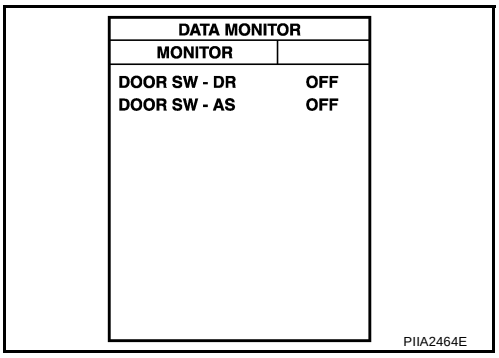

Without CONSULT-II

Check voltage between BCM connector and ground.

Terminals (+) BCM connector	Terminals (+) Terminal	Terminals (–)	Door condition		Voltage (V) (Approx.)
M1	12	Ground	Passenger side	OPEN	0
				CLOSE	Battery voltage
M3	62		Driver side	OPEN	0
				CLOSE	Battery voltage

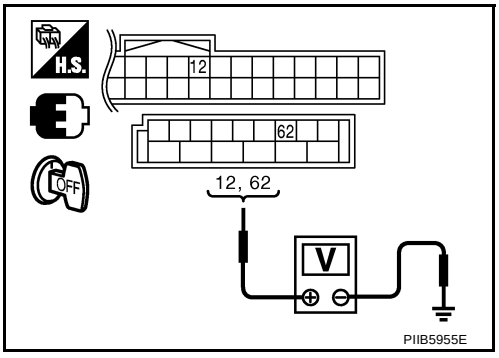

OK or NG

OK >> Door switch circuit is OK.
NG >> GO TO 2.

2. CHECK HARNESS CONTINUITY

1. Turn ignition switch OFF.
2. Disconnect BCM and door switch connector.
3. Check continuity between BCM connector and door switch connector.

A		B		Continuity
BCM connector	Terminal	Door switch connector	Terminal	
M1	12	B35	2	Yes
M3	62	B11		

4. Check continuity between BCM connector ground.

A		Ground	Continuity
BCM connector	Terminal		
M1	12		No
M3	62		

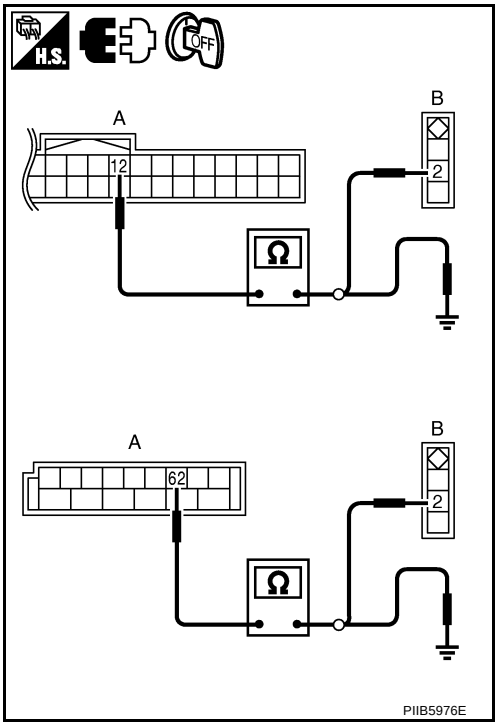

OK or NG

OK >> GO TO 3.
NG >> Repair or replace harness.

3. CHECK DOOR SWITCH

Check door switches.

Terminal		Door switch	Continuity
Door switches			
2	Ground part of door switch	Pushed	No
		Released	Yes

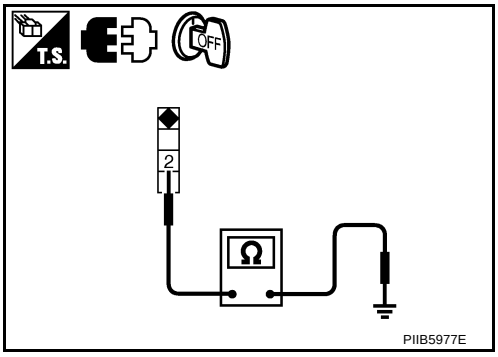

OK or NG

OK >> GO TO 4.
NG >> Replace malfunction door switch.

4. CHECK BCM OUTPUT SIGNAL

1. Connect BCM connector.
2. Check voltage between BCM connector ground.

Terminal			Voltage (V) (Approx.)
(+)		(–)	
BCM connector	Terminal		
M1	12	Ground	Battery voltage
M3	62		

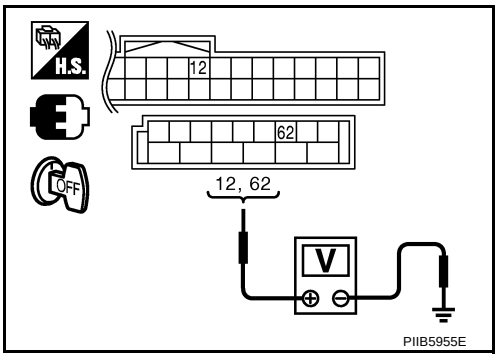

OK or NG

OK >> Further inspection is necessary, Refer to symptom chart.
NG >> Replace BCM.

Check front Door Key Cylinder Switch

NIS00222

1. CHECK DOOR KEY CYLINDER SWITCH INPUT SIGNAL

With CONSULT-II

Check (“KEY CYL LK-SW”, “KEY CYL UN-SW”) in “DATA MONITOR” mode for “POWER DOOR ROCK SYSTEM” with CONSULT-II. Refer to GW-30, "DATE MONITOR"

Monitor item	Condition	
KEY CYL LK-SW	Lock	: ON
	Neutral / Unlock	: OFF
KEY CYL UN-SW	Unlock	: ON
	Neutral / Lock	: OFF

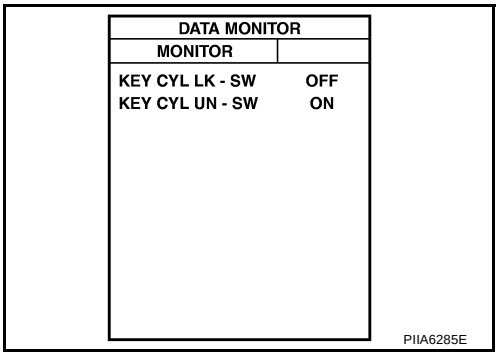

Without CONSULT-II

1. Turn ignition switch OFF.
2. Check voltage between power window main switch connector and ground.

Terminals (+) Power window main switch connector	Terminals (+) Terminal	Terminals (–)	Key position	Voltage (V) (Approx.)
D10	4	Ground	Lock	0
			Neutral / Unlock	5
	6		Unlock	0
			Neutral / Lock	5

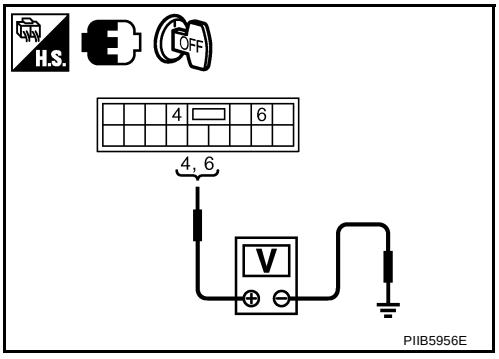

OK or NG

OK >> Further inspection is necessary. Refer to symptom chart.
NG >> GO TO 2.

2. CHECK HARNESS CONTINUITY

1. Disconnect power window main switch and front door key lock assembly (driver side) connector.
2. Check continuity between power window main switch connector and front door lock assembly (driver side) connector.

A: Power window main switch connector	A: Terminal	B: Front door lock assembly (driver side) connector	B: Terminal	Continuity
D10	4	D14	6	Yes
	6		5	

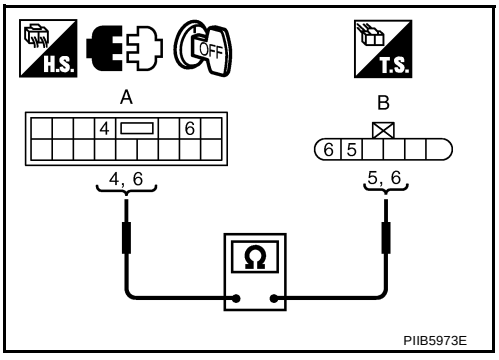

OK or NG

OK >> GO TO 3.
NG >> Repair or replace harness.

3. CHECK DOOR KEY CYLINDER SWITCH GROUND

Check continuity between front door lock assembly (driver side) connector ground.

Front door lock assembly (driver side) connector	Terminal	Ground	Continuity
D14	4		Yes

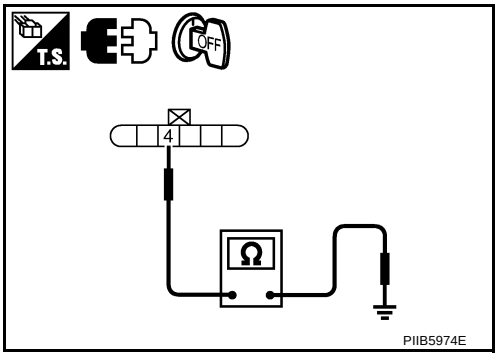

OK or NG

OK >> GO TO 4.
NG >> Repair or replace harness.

4. CHECK DOOR KEY CYLINDER SWITCH

Check front door lock assembly (driver side).

Terminal		Key position	Continuity
Front door lock assembly (driver side)			
5	4	Unlock	Yes
		Neutral / Lock	No
6		Lock	Yes
		Neutral / Unlock	No

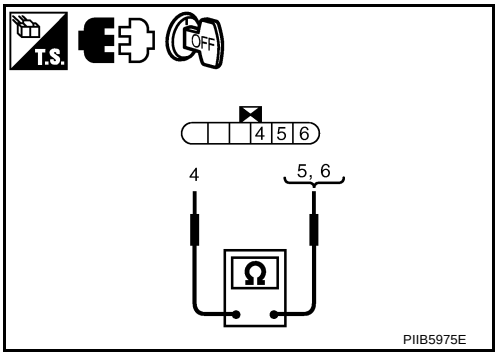

OK or NG

OK >> Further inspection is necessary. Refer to symptom chart.
NG >> Replace front door key cylinder (driver side) switch.

Check power Window Serial Link (Passenger Side)

NIS00223

1. CHECK POWER WINDOW SWITCH OUTPUT SIGNAL

With CONSULT-II

Check (“CDL LOCK SW ”, “CDL UNLOCK SW”) in DATA MONITOR mode for “POWER DOOR LOCK SYSTEM” with CONSULT-II. Refer to GW-30, "DATE MONITOR" .

Monitor item	Condition	
CDL LOCK SW	LOCK	: ON
	UNLOCK	: OFF
CDL UNLOCK SW	LOCK	: OFF
	UNLOCK	: ON

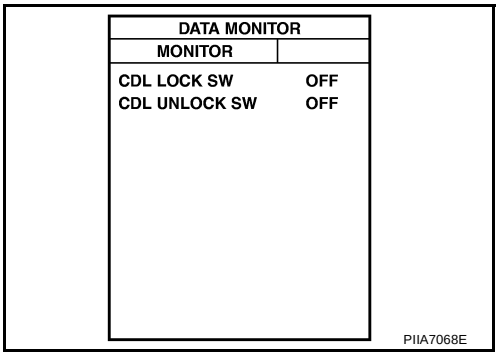

Without CONSULT-II

1. Remove key from ignition switch, and the door of driver side and passenger side is closed.
2. Check signal between BCM connector and ground with oscilloscope when door lock and unlock switch (driver side and passenger side) is turned “LOCK” or “UNLOCK”.
3. Make sure signals which are shown in the figure below can be detected during 10 second just after door lock and unlock switch (driver side and passenger side) is turned “LOCK” or “UNLOCK”.

Terminal			Signal (Reference value)
(+)		(–)	
BCM connector	Terminal		
M1	22	Ground	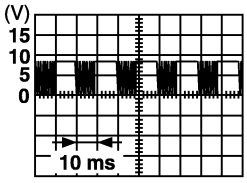

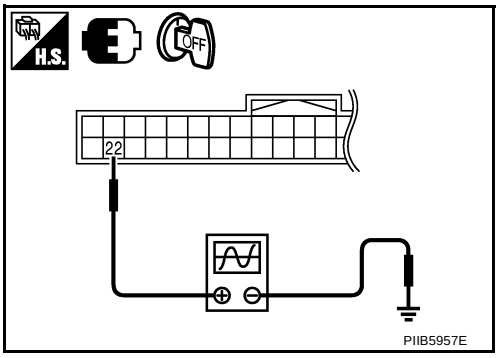

OK or NG

OK >> Power window serial link is OK.
NG >> GO TO 2.

2. CHECK POWER WINDOW SWITCH GROUND

1. Turn ignition switch OFF.
2. Disconnect power window main switch and front power window switch (passenger side) connector.
3. Check continuity between power window main switch connector and ground.

Power window main switch connector	Terminal	Ground	Continuity
D11	17		Yes

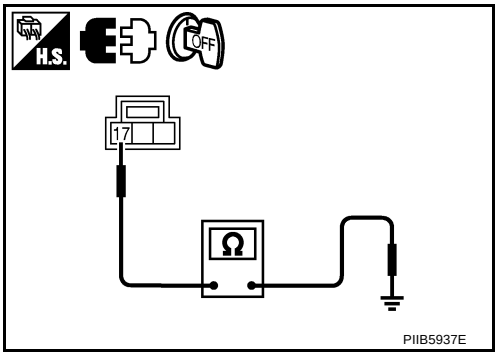

4. Check continuity between power window sub-switch (front passenger side) connector and ground.

Power window sub-switch (front passenger side) connector	Terminal	Ground	Continuity
D46	11		Yes

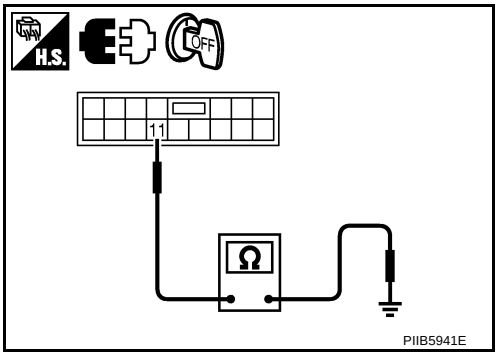

OK or NG

OK >> GO TO 3.
NG >> Repair or replace harness.

3. CHECK POWER WINDOW SERIAL LINK CIRCUIT

1. Disconnect BCM connector.
2. Check continuity between BCM connector and power window main switch connector.

A		B		Continuity
BCM connector	Terminal	Power window main switch connector	Terminal	
M1	22	D10	14	Yes

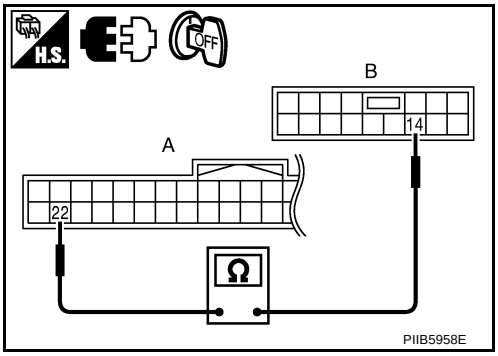

3. Check continuity between BCM connector and power window sub-switch (front passenger side) connector.

A		B		Continuity
BCM connector	Terminal	Power window sub- switch (front passenger side) connector	Terminal	
M1	22	D46	16	Yes

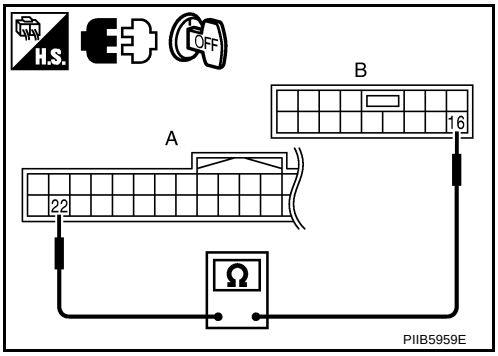

OK or NG

OK >> Replace power window main switch.
NG >> Repair or replace harness.

Check power Window Serial Link (Rear LH or RH)

NIS00224

1. CHECK POWER WINDOW SWITCH

Change with operative power window sub-switch (rear LH or RH).

Whether operates normally is confirmed?

YES >> Replace power window sub-switch (rear LH or RH).
NO >> GO TO 2.

2. CHECK HARNESS CONTINUITY

1. Turn ignition switch OFF.
2. Disconnect power window main switch and power window sub-switch (rear LH or RH) connector.
3. Check continuity between power window main switch connector and power window sub-switch (rear LH or RH) connector.

A		B		Continuity
Power window main switch connector	Terminal	Power window sub- switch (rear LH or RH) connector	Terminal	
D10	14	D60 (LH) D80 (RH)	16	Yes

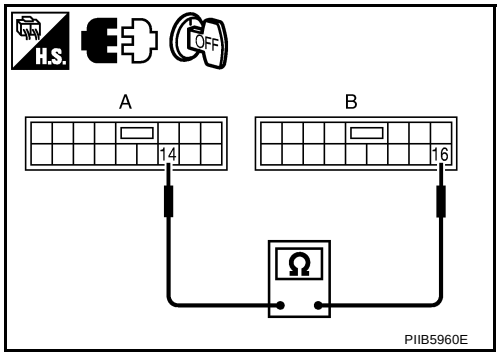

OK or NG

OK >> Replace power window main switch.
NG >> Repair or replace harness.

Check power Window Lock Switch

NIS00225

1. CHECK POWER WINDOW LOCK SIGNAL

Exchanges for a normal power window main switch, and operation is checked.

Does power window lock operate?

YES >> Replace power window main switch.
NO >> Check condition of harness and connector.

SIDE WINDOW GLASS

PFP:83300

Removal and Installation

NIS00226

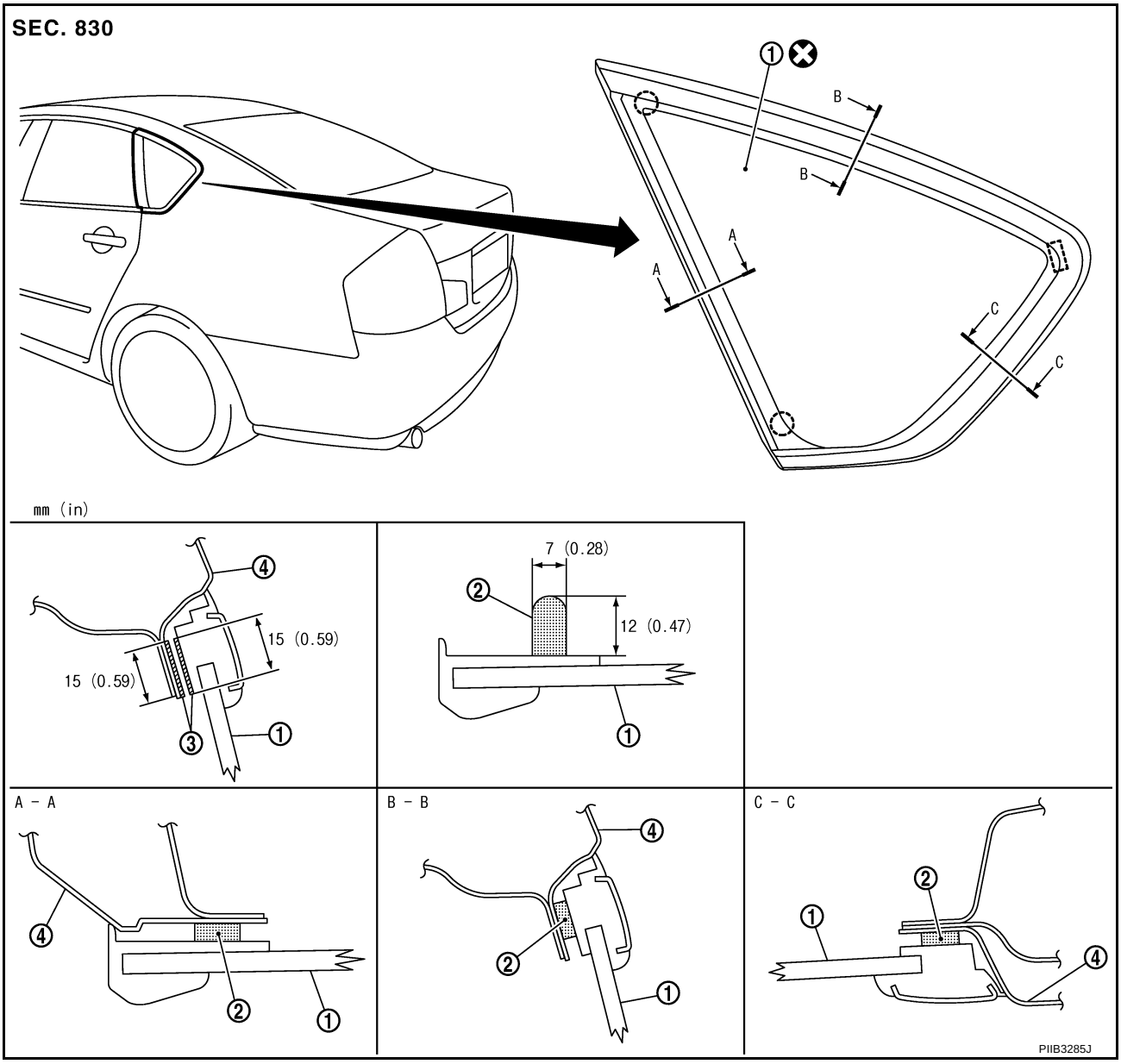

1. Side window glass
2. Adhesive
3. Primer
4. Body side outer panel

REMOVAL

1. Remove the rear pillar finisher. Refer to .EI-41, "REAR PILLAR FINISHER" .
2. Remove the headlining. Refer to EI-52, "HEADLINING" .
3. Apply protective tape around the side window to protect the painted surface from damage.
4. Remove the side window glass using piano wire or power cutting tool and an inflatable pump bag.

   WARNING:
   When cutting the glass from the vehicle, always wear safety glasses and heavy gloves to help prevent glass splinters from entering your eyes or cutting your hands.

   CAUTION:
   - **Be careful not to scratch the glass when removing.**
   - **Do not set or stand the glass on its edge. Small chips may develop into cracks.**

INSTALLATION

- Use a genuine Nissan Urethane Adhesive Kit (if available) or equivalent and follow the instructions furnished with it.
- While the urethane adhesive is curing, open a door window. This will prevent the glass from being forced out by passenger room air pressure when a door is closed.
- The molding must be installed securely so that it is in position and leaves no gap.
- Inform the customer that the vehicle should remain stationary until the urethane adhesive has completely cured (preferably 24 hours). Curing time varies with temperature and humidity.

WARNING:

- **Keep heat and open flames away as primers and adhesive are flammable.**
- **The materials contained in the kit are harmful if swallowed, and may irritate skin and eyes. Avoid contact with the skin and eyes.**
- **Use in an open, well ventilated location. Avoid breathing the vapors. They can be harmful if inhaled. If affected by vapor inhalation, immediately move to an area with fresh air.**
- **Driving the vehicle before the urethane adhesive has completely cured may affect the performance of the side window in case of an accident.**

CAUTION:

- **Do not use an adhesive which is past its usable term. Shelf life of this product is limited to six months after the date of manufacture. Carefully adhere to the expiration or manufacture date printed on the box.**
- **Keep primers and adhesive in a cool, dry place. Ideally, they should be stored in a refrigerator.**
- **Do not leave primers or adhesive cartridge unattended with their caps open or off.**
- **The vehicle should not be driven for at least 24 hours or until the urethane adhesive has completely cured. Curing time varies depending on temperature and humidity. The curing time will increase under lower temperature and lower humidity.**

Repairing Water Leaks

Leaks can be repaired without removing and reinstalling glass.
If water is leaking between the urethane adhesive material and body or glass, determine the extent of leakage. This can be done by applying water to the side window area while pushing glass outward.
To stop the leak, apply primer (if necessary) and then urethane adhesive to the leak point.

REAR WINDOW GLASS AND MOLDING

PFP:79712

Removal and Installation

NIS00227

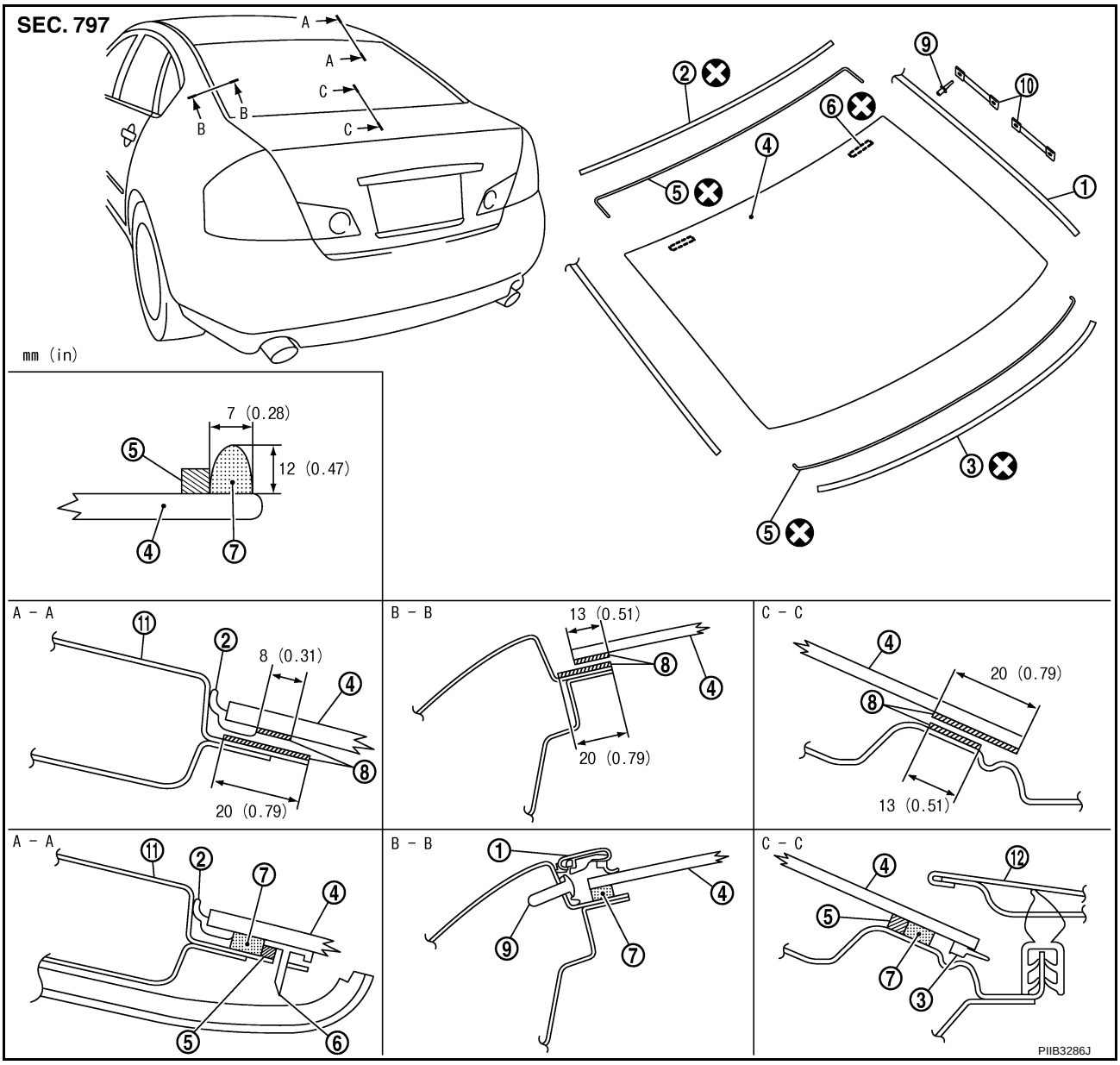

1. Roof side molding	2. Rear window molding (upper)	3. Rear window molding (lower)
4. Rear window glass	5. Dam rubber	6. Spacer
7. Adhesive	8. Primer	9. Rivet
10. Fastener	11. Roof panel	12. Trunk lid outer panel

REMOVAL

1. Remove rear seatback and rear seat cushion. Refer to SE-173, "REAR SEAT" .
2. Remove the rear pillar finisher. Refer to EI-41, "REAR PILLAR FINISHER" .
3. Remove the rear parcel shelf finisher. Refer to EI-42, "REAR PARCEL SHELF FINISHER" .
4. Remove the rear of the headlining. Refer to EI-52, "HEADLINING" .
5. Remove the connectors and grounds for the rear window defogger and printed antenna.
6. Remove the roof side molding. Refer to EI-25, "ROOF SIDE MOLDING" .

7. After removing molding using pliers, remove glass using piano wire or power cutting tool A and an inflatable pump bag B.

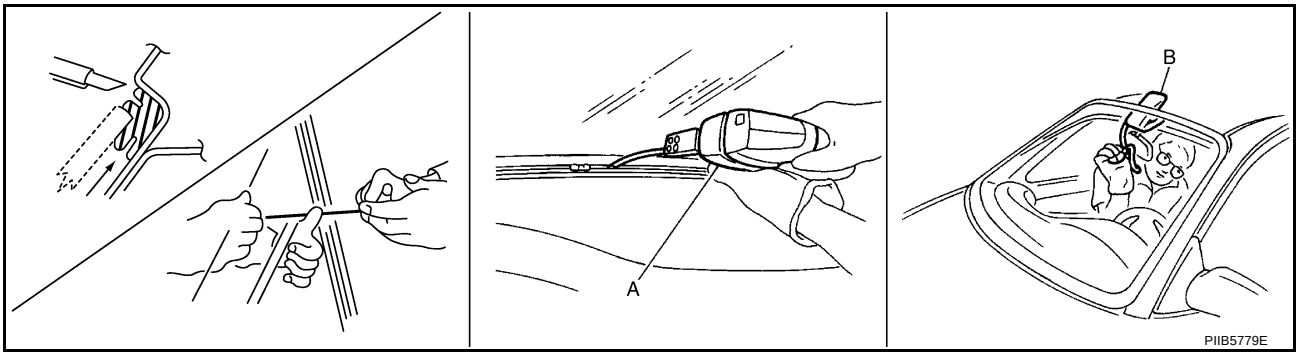

8. Remove the rear window glass, using suction lifter.

NOTE:
If a rear window glass is reused, mark the body and the glass with mating marks.

WARNING:
When cutting the glass from the vehicle, always wear safety glasses and heavy gloves to help prevent glass splinters from entering your eyes or cutting your hands.

CAUTION:
- **When a rear window glass is reused, do not use a cutting knife or power cutting tool.**
- **Be careful not to scratch the glass when removing.**
- **Do not set or stand the glass on its edge. Small chips may develop into cracks.**

INSTALLATION

- The dam rubber should be installed in position.
- Use a genuine Nissan Urethane Adhesive Kit (if available) or equivalent and follow the instructions furnished with it.
- While the urethane adhesive is curing, open a door window. This will prevent the glass from being forced out by passenger compartment air pressure when a door is closed.
- The molding must be installed securely so that it is in position and leaves no gap.
- Inform the customer that the vehicle should remain stationary until the urethane adhesive has completely cured (preferably 24 hours). Curing time varies with temperature and humidity.

  WARNING:
  - **Keep heat and open flames away as primers and adhesive are flammable.**
  - **The materials contained in the kit are harmful if swallowed, and may irritate skin and eyes. Avoid contact with the skin and eyes.**
  - **Use in an open, well ventilated location. Avoid breathing the vapors. They can be harmful if inhaled. If affected by vapor inhalation, immediately move to an area with fresh air.**
  - **Driving the vehicle before the urethane adhesive has completely cured may affect the performance of the rear window in case of an accident.**

  CAUTION:
  - **Do not use an adhesive which is past its usable term. Shelf life of this product is limited to six months after the date of manufacture. Carefully adhere to the expiration or manufacture date printed on the box.**
  - **Keep primers and adhesive in a cool, dry place. Ideally, they should be stored in a refrigerator.**
  - **Do not leave primers or adhesive cartridge unattended with their caps open or off.**
  - **The vehicle should not be driven for at least 24 hours or until the urethane adhesive has completely cured. Curing time varies depending on temperature and humidity. The curing time will increase under lower temperature and lower humidity.**

Repairing Water Leaks

Leaks can be repaired without removing and reinstalling glass.
If water is leaking between the urethane adhesive material and body or glass, determine the extent of leakage. This can be done by applying water to the side window area while pushing glass outward.
To stop the leak, apply primer (if necessary) and then urethane adhesive to the leak point.

FRONT DOOR GLASS AND REGULATOR

PFP:80300

Removal and Installation

NIS00228

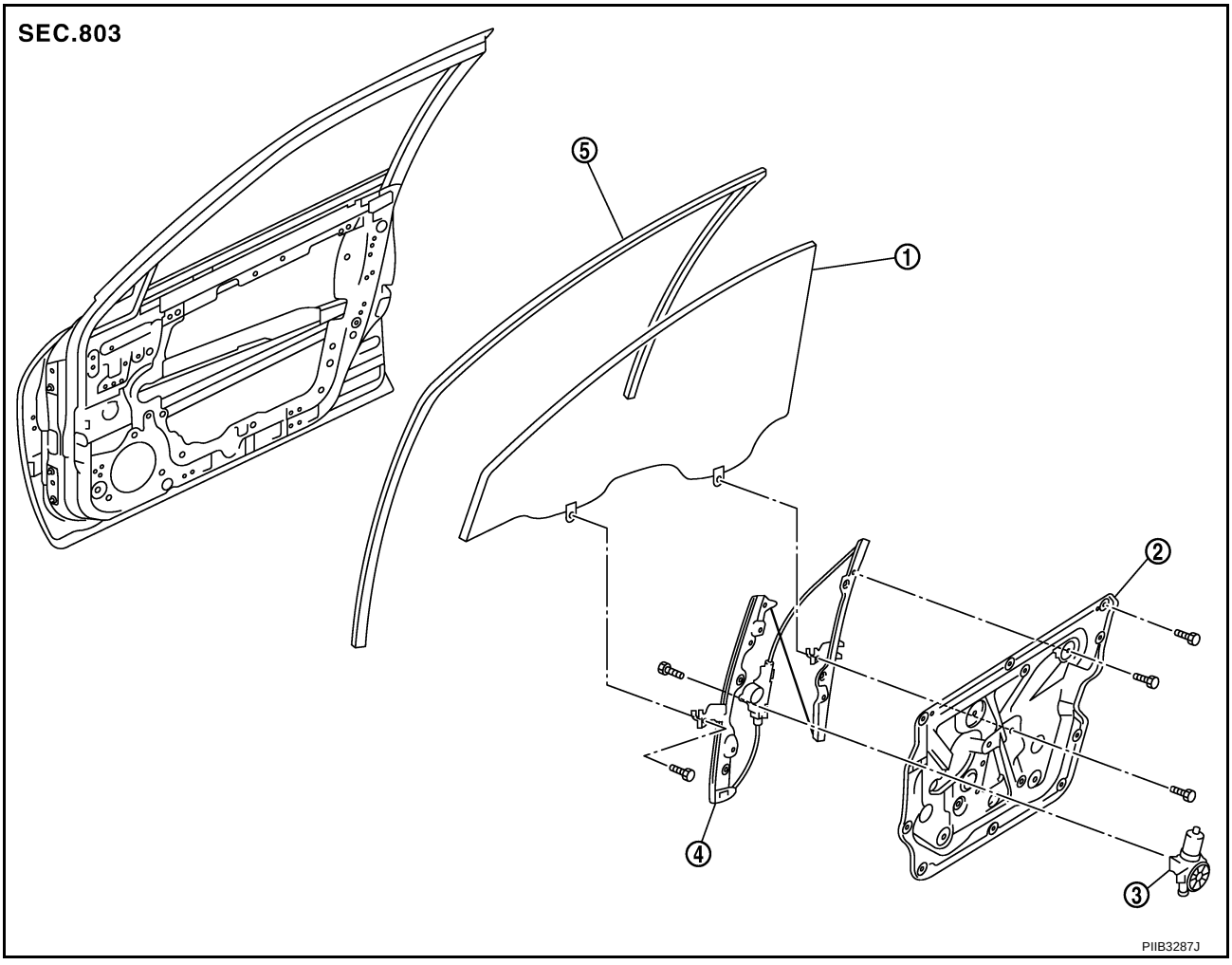

1. Door glass
2. Module assembly
3. Power window motor
4. Regulator assembly
5. Door glass run

DOOR GLASS

Removal

1. Remove the front door finisher. Refer to EI-34, "DOOR FINISHER" .
2. Remove the front door sash cover inner. Refer to EI-36, "FRONT DOOR SASH COVER INNER" .
3. Operate the power window main switch to raise/lower the door window until the glass mounting bolts can be seen.
4. Remove the glass mounting bolts.

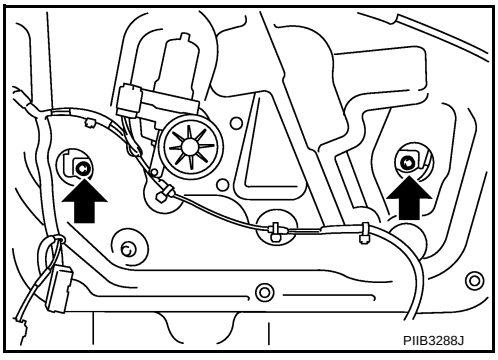

5. While holding the door glass, raise it at the rear end to pull the glass out of the sash toward the inside of the door.

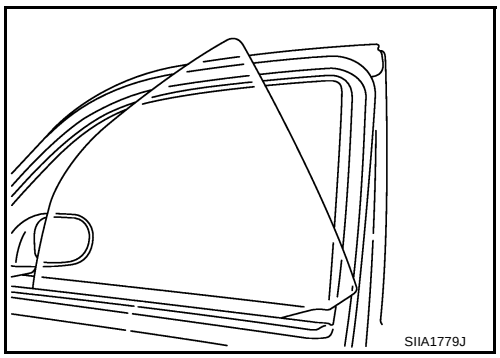

Installation

Install in the reverse order of removal.

REGULATOR ASSEMBLY

Removal

1. Remove the front door finisher. Refer to EI-34, "DOOR FINISHER" .
2. Operate the power window main switch to raise/lower the door window until the glass mounting bolts can be seen.
3. Remove the glass mounting bolts.

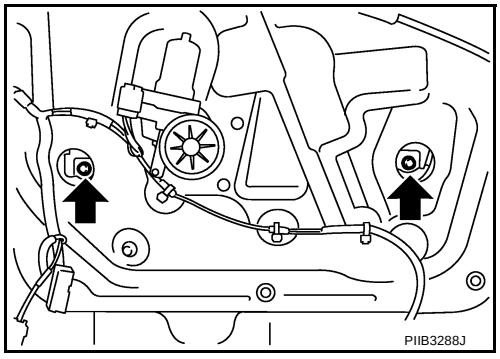

4. Raise up the door glass and hold with a suction lifter A.

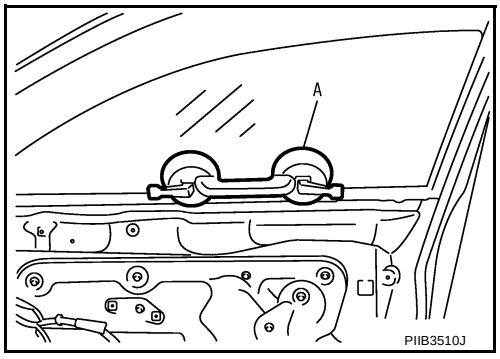

5. Remove the mounting bolts, and remove the module assembly.
6. Disconnect the harness connector for the module assembly, and unclip the harness from the inside.

Installation

Install in the reverse order of removal.

Inspection after Removal

Check the regulator assembly for the following items. If a malfunction is detected, replace or grease it.

- Wire wear
- Regulator deformation
- Grease condition for each sliding part

The arrows in the figure show the application points of the multi-purpose grease.

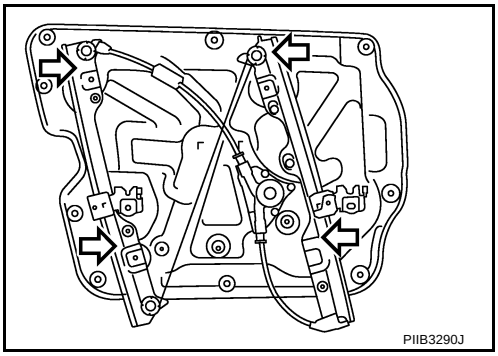

Disassembly and Assembly

NIS00229

REGULATOR ASSEMBLY

Disassembly

1. Remove power window motor from module assembly.
2. Remove regulator assembly from module assembly.

Assembly

Assemble in the reverse order of disassembly.

Inspection after Installation

NIS0022A

SYSTEM INITIALIZATION

If any of the following work has been done, initialize the system.

- Electric power supply to power window switch or motor is interrupted by blown fuse or disconnecting battery cable, etc.
- Removal and installation of the regulator assembly.
- Removal and installation of the motor from the regulator assembly.
- Removal and installation of the harness connector of the power window switch.
- Operate the regulator assembly as a unit.
- Removal and installation of the door glass.
- Removal and installation of the door glass run.

Initialization

After installing each component to the vehicle, follow the steps below.

1. Disconnect the minus terminal of battery or disconnect power window switch's harness connector temporarily, then reconnect after at least 1 minute.
2. Turn ignition switch ON.
3. Open the window to its full width by operating the power window switch. (Exclude this pocedure if the window is already fully opened)
4. Fully draw the power window switch in up direction (auto close position) and hold, keep holding the switch even when window is completely closed and then release afeter 3 second has passed.
5. Inspection of the anti-pinch system function.

   NOTE:
   Initialization may be cancelled with continuous opening and closing operation.In this case, initialize the system.

INSPECT THE FUNCTION OF THE ANTI-PINCH SYSTEM.

1. Fully open the door glass.
2. Place a wooden piece (wooden hammer handle etc.) at near fully closed position.
3. Carry out fully closing operation with auto up switch.

- Check that the glass reverses without pinching the wooden piece, is lowered approx.150 mm (5.91 in) or for 2 seconds and then stops.
- The glass should not be raised with power window main switch operated while it is reversing or lowering.

CAUTION:

- **Do not inspect with pinching a part of worker's body, a hand etc. Work carefully not to be pinched.**
- **Check that auto up function is normal before inspection following the system initialization.**

FITTING INSPECTION

- Make sure the glass is securely fit into the glass run groove.
- Lower the glass slightly [approx. 10 to 20 mm (0.39 to 0.79 in)] and make sure the clearance to the sash is parallel. If the clearance between the glass and sash is not parallel, loosen the regulator mounting bolts, guide rail mounting bolts, and glass and guide rail mounting bolts to correct the glass position.

REAR DOOR GLASS AND REGULATOR

PFP:82300

Removal and Installation

NIS0022B

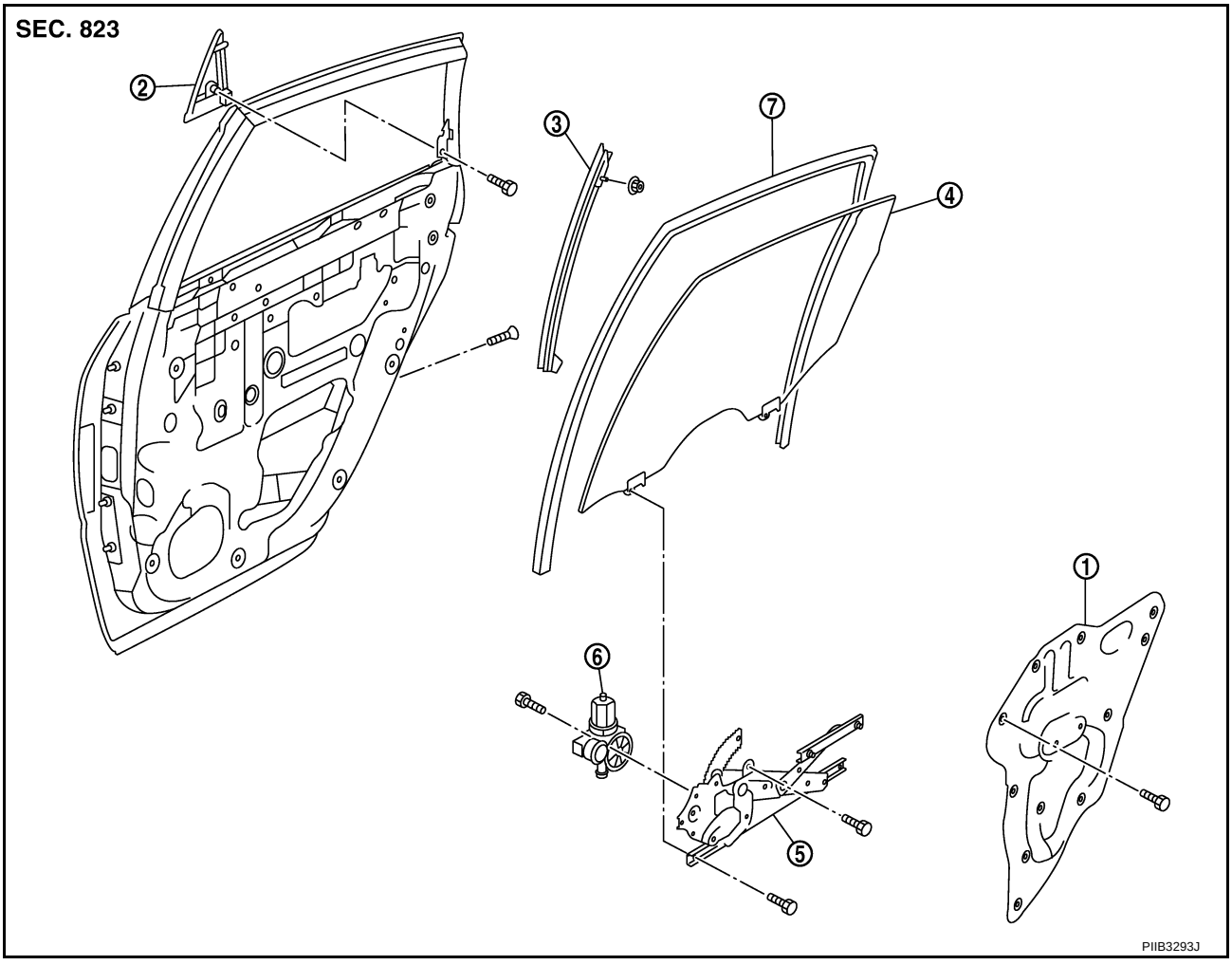

1. Rear door inner frame
2. Outer corner cover
3. Lower sash
4. Door glass
5. Regulator assembly
6. Power window motor
7. Door glass run

DOOR GLASS

Removal

1. Remove the rear door finisher. Refer to EI-34, "DOOR FINISHER" .
2. Remove the rear door sash cover inner. Refer to EI-36, "REAR DOOR SASH COVER INNER" .
3. Remove the rear door inner frame.

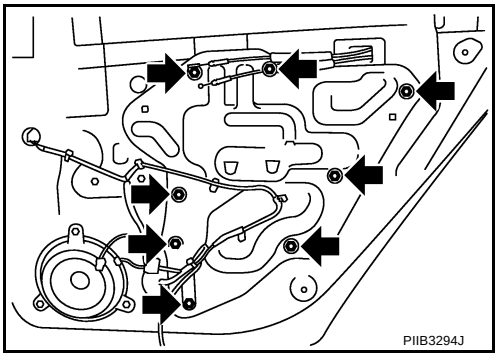

4. Remove the fixing bolt and pull up the outer corner cover (1) to remove outward.

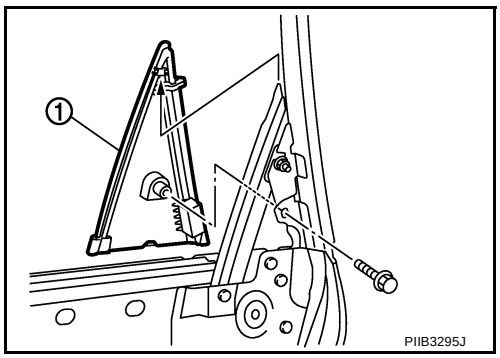

5. Remove the rear door sash fixing nut and the door side TORX bolt (T30) (1).
6. Remove the harness clip and pull out the rear door sash from the door panel.

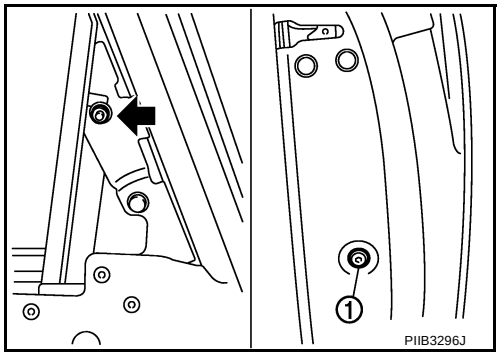

7. Operate the power window switch to raise/lower the door window until the glass mounting bolts can be seen.
8. Remove the glass mounting bolts.

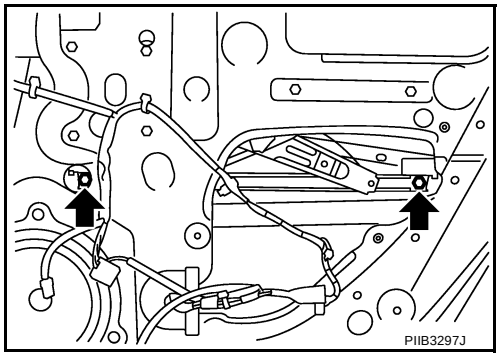

9. Remove the door glass from the inside of door panel.
10. Remove the door glass run.

Installation

Install in the reverse order of removal.

REGULATOR ASSEMBLY

Removal

1. Remove the rear door finisher. Refer to EI-34, "DOOR FINISHER" .
2. Remove the rear door inner frame.

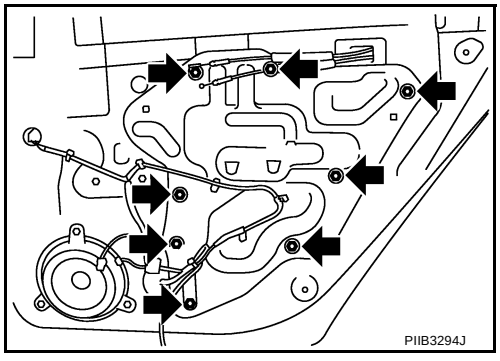

3. Operate the power window switch to raise/lower the door window until the glass mounting bolts can be seen.
4. Remove the glass mounting bolts.

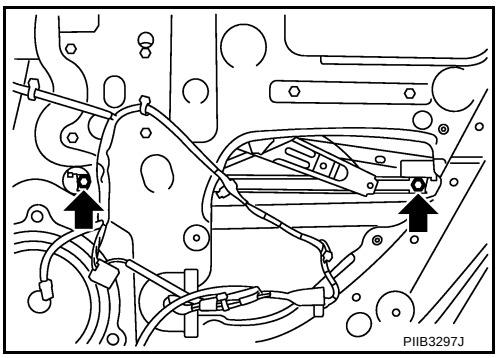

5. Raise up the door glass and hold with a suction lifter A.

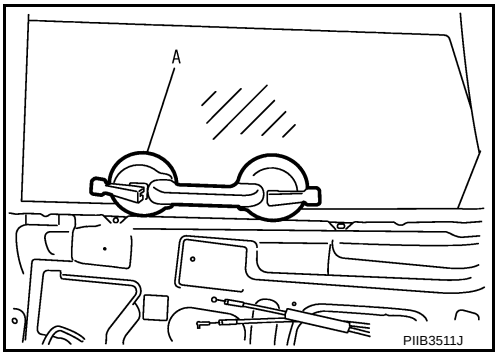

6. Disconnect the connector for the regulator assembly.
7. Remove the regulator mounting bolts, and remove the regulator from the door panel.

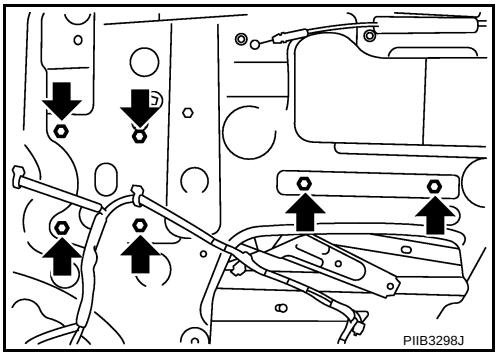

Installation

Install in the reverse order of removal.

Inspection after Removal

Check the regulator assembly for the following items. If a malfunction is detected, replace or grease it.

- Gear wear
- Regulator deformation
- Grease condition for each sliding part

The arrows in the figure show the application points of the multi-purpose grease.

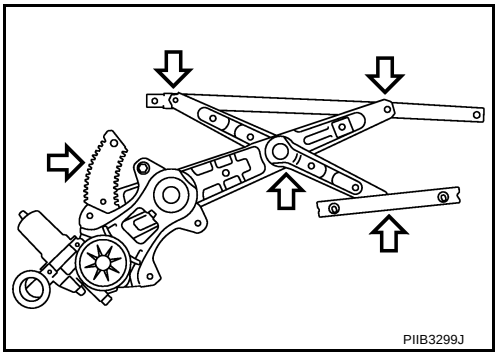

Disassembly and Assembly

NIS0022C

REGULATOR ASSEMBLY

Disassembly

Remove power window motor from regulator assembly.

Assembly

Assemble in the reverse order of disassembly.

Inspection after Installation

NIS0022D

SYSTEM INITIALIZATION

If any of the following work has been done, initialize the system.

- Electric power sauce to power window switch or motor is interrupted by broken fuse or disconnecting battery cable, etc.
- Removal and installation of the regulator assembly.
- Removal and installation of the motor from the regulator assembly.
- Removal and installation of the harness connector of the power window switch.
- Operate the regulator assembly as a unit.
- Removal and installation of the door glass.
- Removal and installation of the door glass run.

Initialization

After installing each component to the vehicle, follow the steps below.

1. Disconnect the minus terminal of battery or disconnect power window switch's harness connector temporarily, then reconnect after at least 1 minute.
2. Turn ignition switch ON.
3. Open the window to its full width by operating the power window switch. (Exclude this pocedure if the window is already fully opened)
4. Fully draw the power window switch in up direction (auto close position) and hold, keep holding the switch even when window is completely closed and then release afeter 3 second has passed.
5. Inspection of the anti-pinch system function.

   NOTE:
   Initialization may be cancelled with continuous opening and closing operation.In this case, initialize the system.

INSPECT THE FUNCTION OF THE ANTI-PINCH SYSTEM

1. Fully open the door glass.
2. Place a wooden piece (wooden hammer handle etc.) at near fully closed position.
3. Carry out fully closing operation with auto up switch.

- Check that the glass reverses without pinching the wooden piece, is lowered approx.150mm (5.91in) or for 2 seconds and then stops.
- The glass should not be raised with power window main switch operated while it is reversing or lowering.

CAUTION:

- **Do not inspect with pinching a part of worker's body, a hand etc. Work carefully not to be pinched.**
- **Check that auto up function is normal before inspection following the system initialization.**

FITTING INSPECTION

- Make sure the glass is securely fit into the glass run groove.
- Lower the glass slightly [approx. 10 to 20 mm (0.39 to 0.79 in)], and make sure the clearance to the sash is parallel. If the clearance between the glass and sash is not parallel, loosen the regulator mounting bolts, guide rail mounting bolts, and glass and carrier plate mounting bolts to correct the glass position.

INSIDE MIRROR

PFP:96321

Wiring Diagram –I/MIRR–

NIS0022E

GW-I/MIRR-01

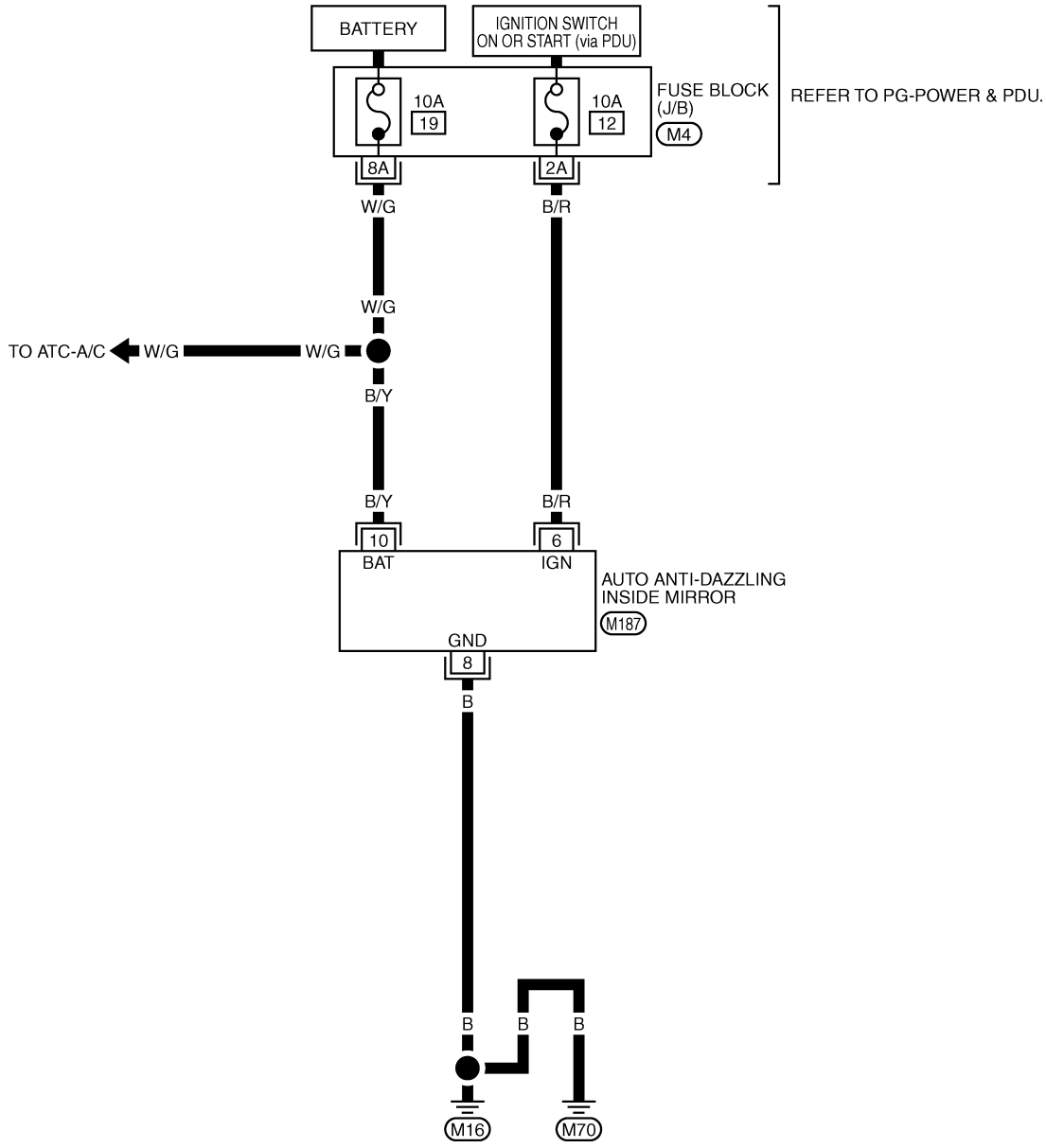

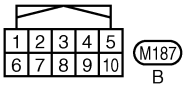

REFER TO THE FOLLOWING.
M4 -FUSE BLOCK-JUNCTION BOX (J/B)

TIWT2038E

Removal and Installation

NIS0022F

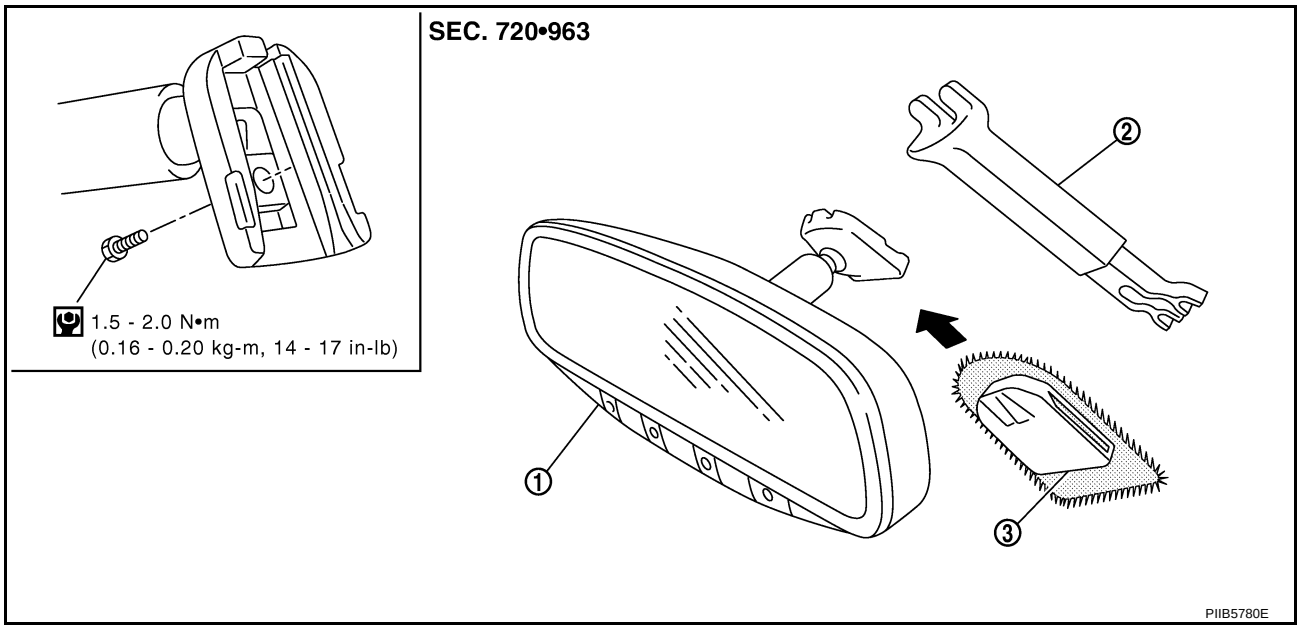

1. Inside mirror
2. Inside mirror finisher (if equipped)
3. Mirror base

CAUTION:
Apply Genuine Mirror Adhesive or equivalent to bonding surface of mounting bracket. Refer to GI-47, "RECOMMENDED CHEMICAL PRODUCTS AND SEALANTS" .

REMOVAL

1. Remove inside mirror finisher (if equipped).
2. Remove screw of mirror base.
3. Slide the mirror upward to remove.
4. Disconnect the connector (if equipped).

INSTALLATION

Install in the reverse order of removal.

REAR WINDOW DEFOGGER

PFP:25350

Component Parts and Harness Connector Location

NIS0022G

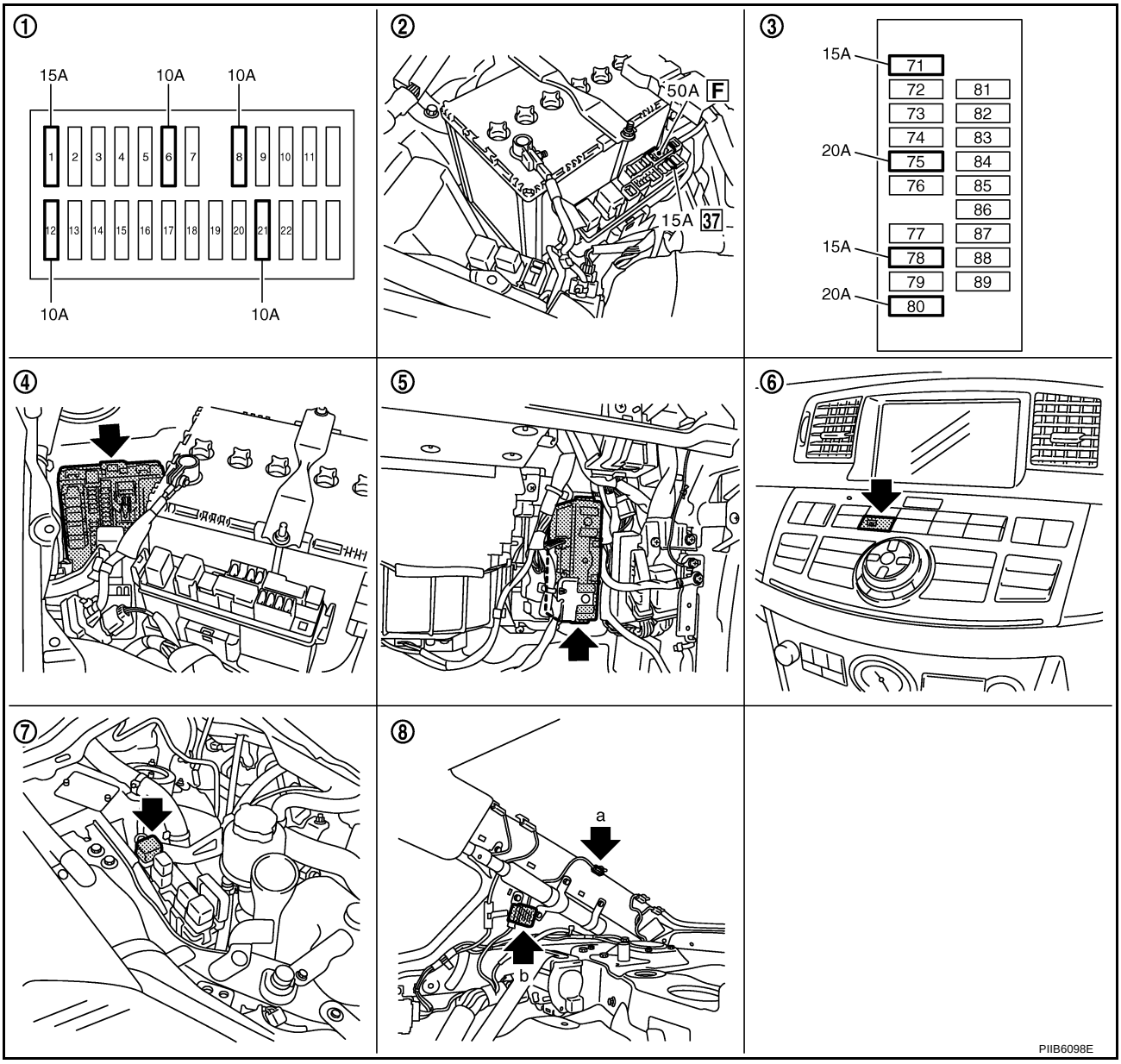

1.	Fuse block (J/B)	2.	Fuse and fusible link box	3.	Fuse block (in IPDM E/R)
4.	IPDM E/R E4, E8, E9	5.	BCM M1, M2	6.	Rear window defogger switch (in multi function switch) M69
7.	Rear window defogger relay E36	8.	a : Rear window defogger B604,B701 b : Condenser B49		

System Description

NIS0022H

The rear window defogger system is controlled by BCM and IPDM E/R.
The rear window defogger operates only for approximately 15 minutes.
Power is at all times supplied

- through 20A fuse [No. 75, located in the IPDM E/R]
- to rear window defogger relay terminals 6,
- through 20A fuse [No. 80, located in the IPDM E/R]
- to rear window defogger relay terminals 3,
- through 15A fuse [No. 37, located in the fuse and fusible link box
- to multi-function switch terminal 1,

- through 50A fusible link (letter **F** , located in the fuse and fusible link box)
- to BCM terminal 55,
- through 10A fuse [No. 21, located in the fuse block (J/B)]
- to BCM terminal 42.

With the ignition switch turned to ON or START position,
Power is supplied

- through 15A fuse [No. 1, located in the fuse block (J/B)]
- to BCM terminal 38.
- through 10A fuse [No. 12, located in the fuse block (J/B)]
- to rear window defogger relay terminal 1.

With the ignition switch turned to ACC or ON position,

- through 10A fuse [No. 6, located in the fuse block (J/B)]
- to multi-function switch terminal 2.

Ground is supplied

- to BCM terminal 52
- through body grounds M16 and M70,
- to multi-function switch terminal 14
- through body grounds M16 and M70,
- to IPDM E/R terminals 38 and 51
- through body grounds E22 and E43.

When rear window defogger switch in multi-function switch is turned to ON.
Then multi-function switch recognizes that rear window defogger switch is turned to ON.
Then it sends rear window defogger switch signals to AV control unit (without navigation system) or NAVI control unit (with navigation system) via AV line.
When AV control unit (without navigation system) or NAVI control unit (with navigation system) receives rear window defogger switch signals, and display on the screen.
Then AV control unit (without navigation system) or NAVI control unit (with navigation system) recognizes that rear window defogger switch is turned to ON.
Then it sends rear window defogger switch signal to BCM via DATA LINE (CAN H, CAN L).
Then BCM recognizes that rear window defogger switch signal.
Then it sends rear window defogger request signal to IPDM E/R via DATA LINE (CAN H, CAN L).
When IPDM E/R receives rear window defogger switch signals,
Ground is supplied

- to rear window defogger relay terminal 2
- through IPDM E/R terminal 57
- through IPDM E/R terminal 51
- through body grounds E22 and E43.

And then rear window defogger relay is energized.
When rear window defogger relay is turned ON, signals are transmitted.

- through rear window defogger relay terminals 5 and 7
- through condenser terminal 1
- to rear window defogger terminal 1

Rear window defogger terminal 2 is grounded through grounds B702.
With power and ground supplied, rear window defogger filaments heat and defog the rear window.
When rear window defogger relay is turned to ON,
Power is supplied

- through rear window defogger relay terminals 5 and 7
- through fuse block (J/B) terminal 2C
- through 10A fuse [No. 8, located in the fuse block (J/B)] and
- through fuse block (J/B) terminal 5B
- to door mirror (LH and RH) terminal 4.

Door mirror (LH and RH) terminal 8 is grounded through body grounds M16 and M70.

With power and ground supplied, door mirror defogger filaments heat and defog the mirror.

CAN Communication System Description

NIS0022I

CAN (Controller Area Network) is a serial communication line for real time application. It is an on-vehicle multiplex communication line with high data communication speed and excellent error detection ability. Many electronic control units are equipped onto a vehicle, and each control unit shares information and links with other control units during operation (not independent). In CAN communication, control units are connected with 2 communication lines (CAN H line, CAN L line) allowing a high rate of information transmission with less wiring. Each control unit transmits/receives data but selectively reads required data only.

CAN Communication Unit

NIS0022J

Refer to LAN-50, "CAN System Specification Chart" .

Schematic

NIS0022K

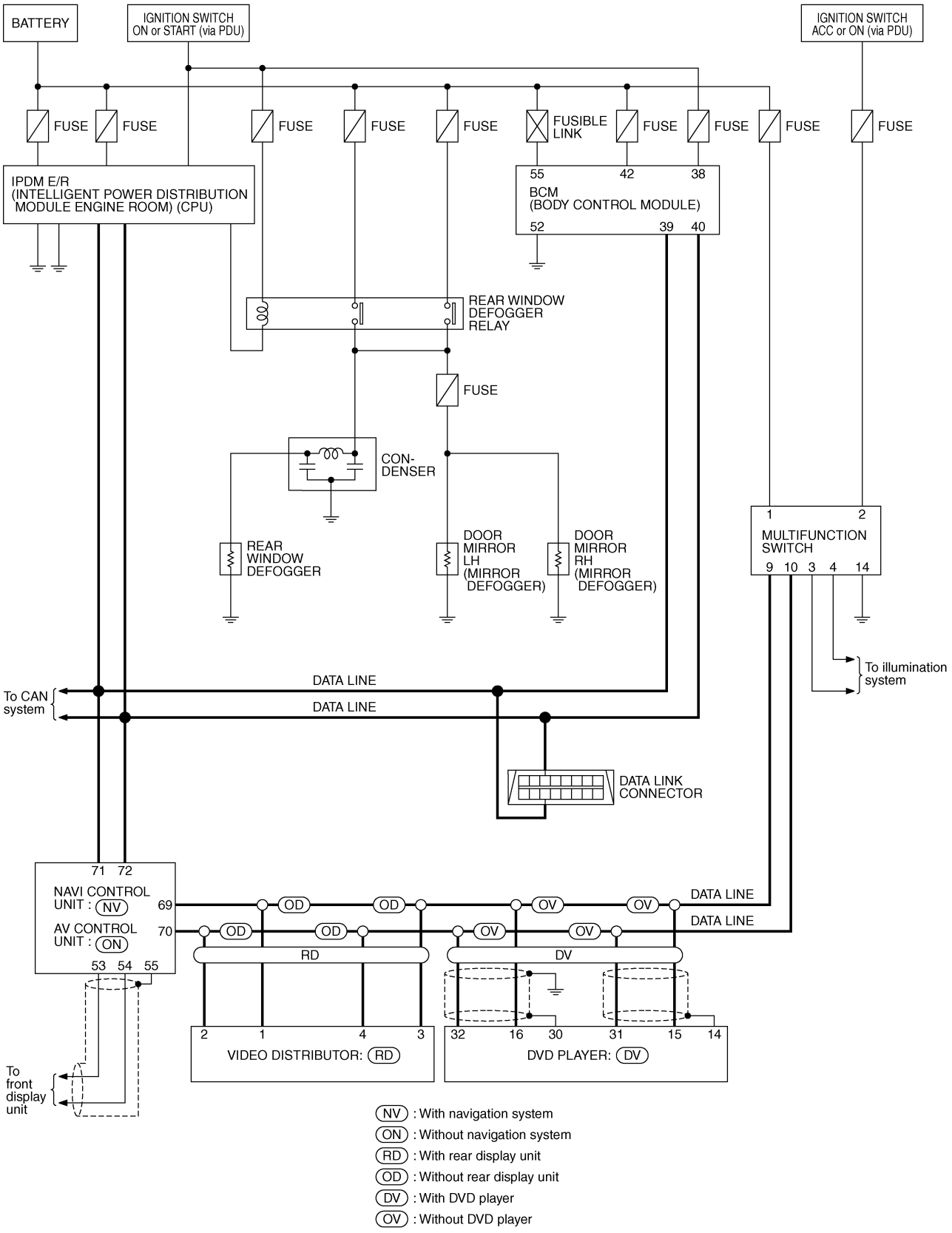

TIWT1352E

Wiring Diagram — DEF —

NIS0022L

GW-DEF-01

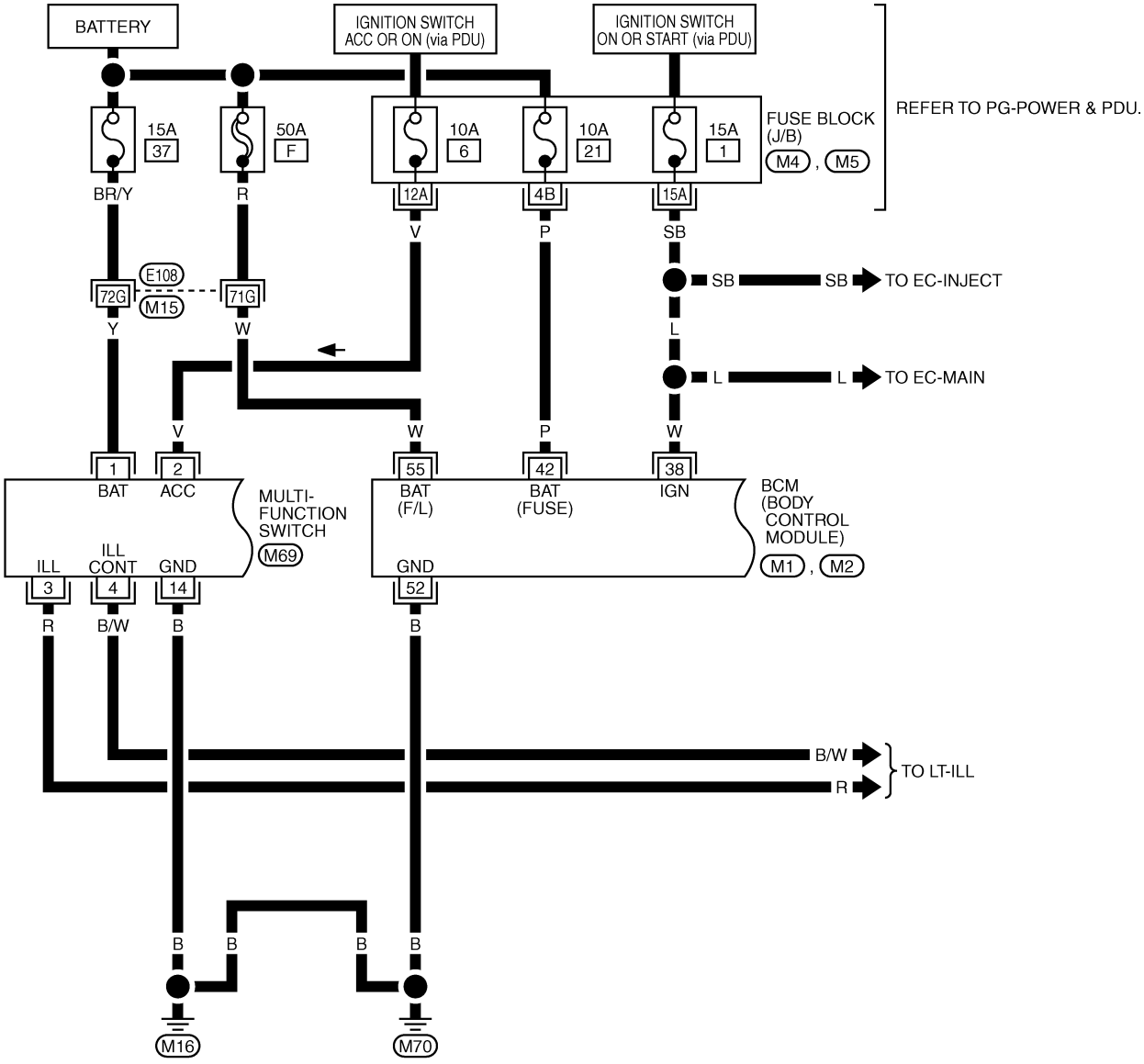

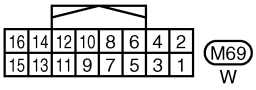

REFER TO THE FOLLOWING.

E108 -SUPER MULTIPLE JUNCTION (SMJ)

M4 , M5 -FUSE BLOCK-JUNCTION BOX (J/B)

M1 , M2 -ELECTRICAL UNITS

TIWT2117E

GW-DEF-02

: DATA LINE
NV : WITH NAVIGATION SYSTEM
ON : WITHOUT NAVIGATION SYSTEM
RD : WITH REAR DISPLAY UNIT
OD : WITHOUT REAR DISPLAY UNIT
DV : WITH DVD PLAYER
WB : WITH BOSE SYSTEM
OB : WITHOUT BOSE SYSTEM
BR : WITH BOSE SYSTEM WITHOUT REAR DISPLAY UNIT
XR : WITH REAR DISPLAY UNIT OR WITHOUT BOSE SYSTEM
*1 R : XR
O : BR
*2 R : OB
O : BR
*3 R : OB
O : WB

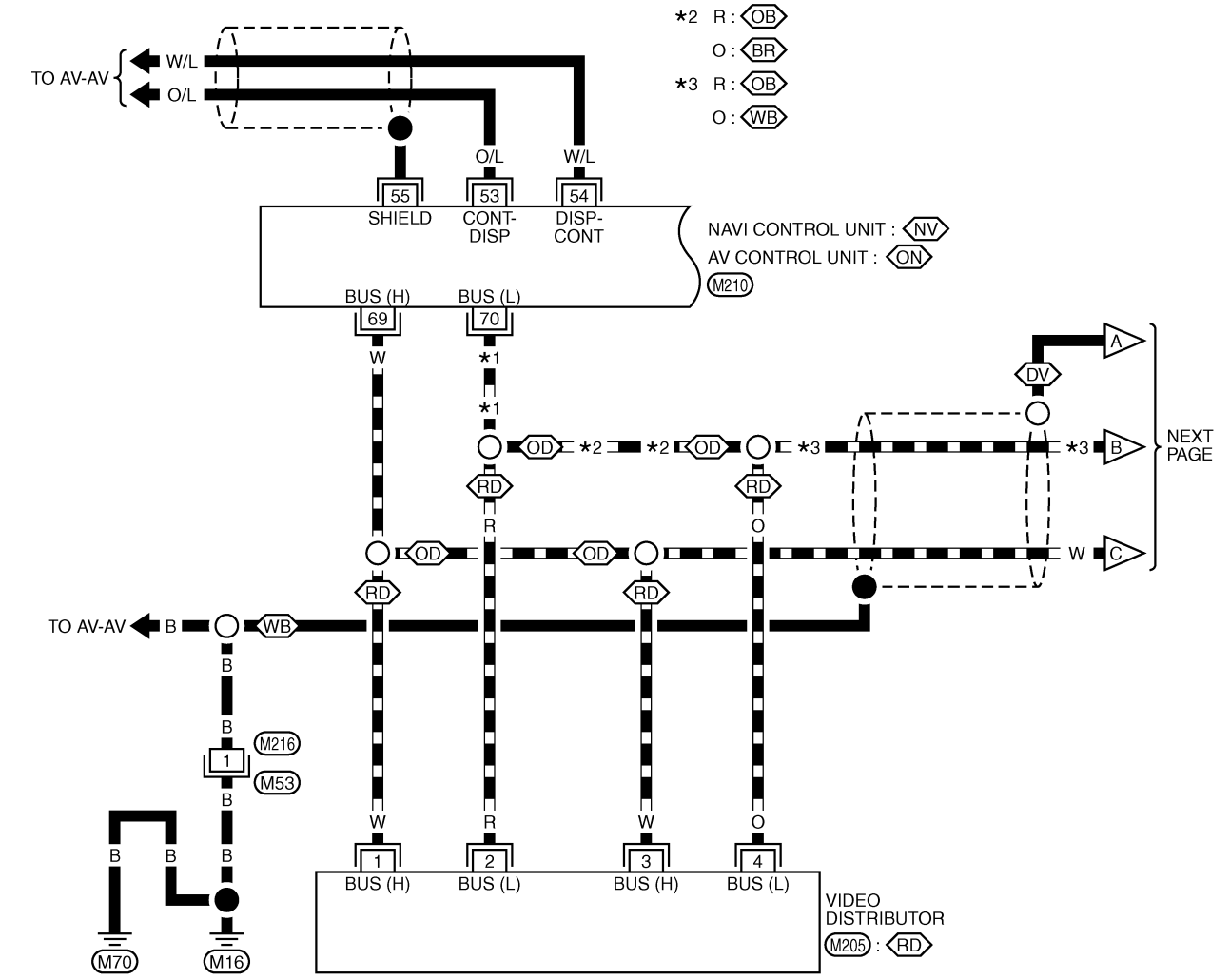

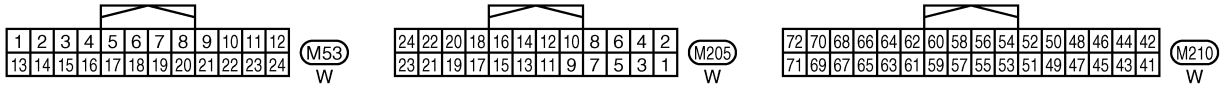

TIWT2039E

GW-DEF-03

: DATA LINE
DV : WITH DVD PLAYER
OV : WITHOUT DVD PLAYER
WB : WITH BOSE SYSTEM
OB : WITHOUT BOSE SYSTEM
A1 : 2WD MODELS WITHOUT BOSE SYSTEM, NAVIGATION SYSTEM AND RAS
VR : WITHOUT DVD PLAYER EXCEPT A1

*1 LG : DV
Y : OV
*2 V : DV
R : VR
O : A1
*3 P : DV
R : VR
O : A1
*4 L : DV
Y : OV
*5 R : OB
O : WB

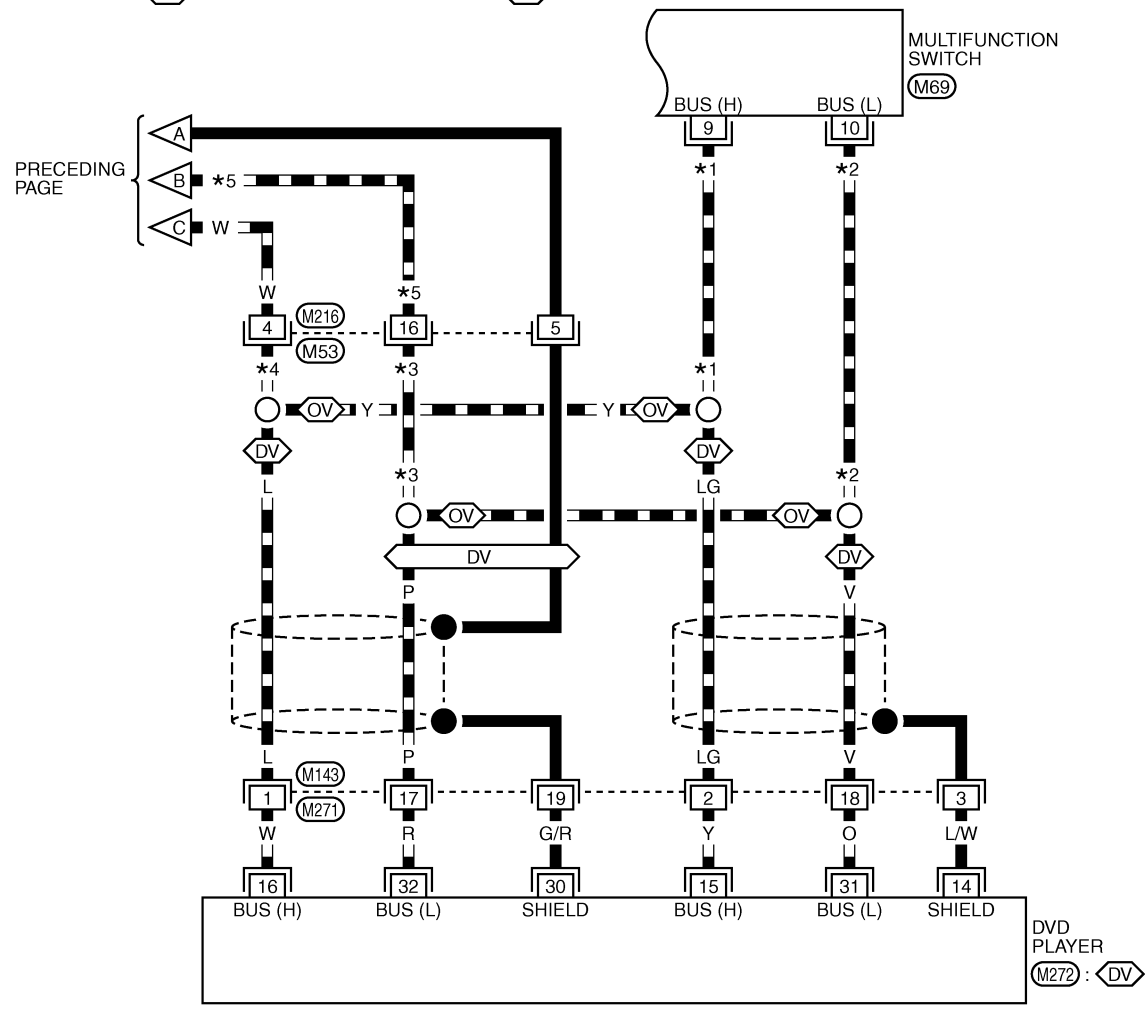

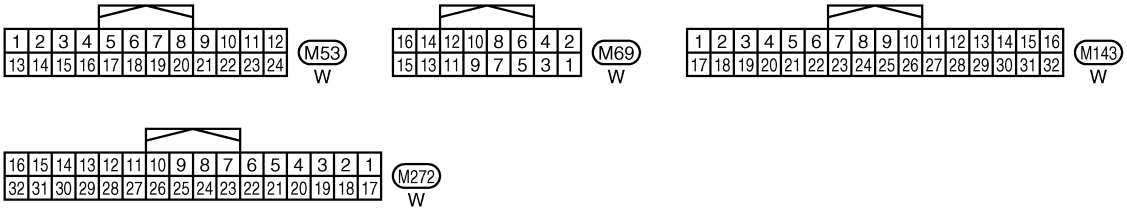

TIWT2040E

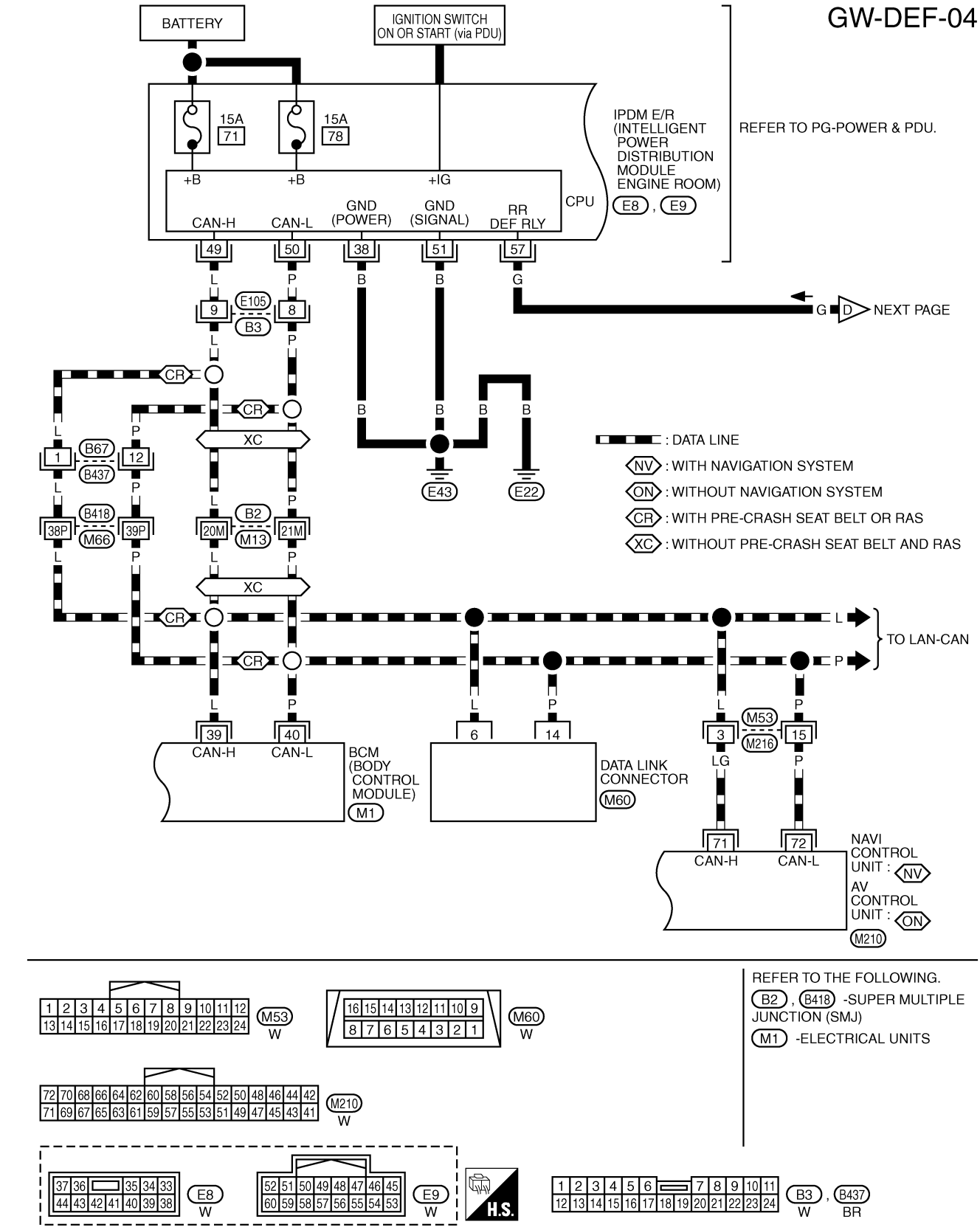
GW-DEF-04
BATTERY
IGNITION SWITCH ON OR START (via PDU)
15A 71
15A 78
+B
+B
+IG
CPU
CAN-H
CAN-L
GND (POWER)
GND (SIGNAL)
RR DEF RLY
IPDM E/R (INTELLIGENT POWER DISTRIBUTION MODULE ENGINE ROOM)
E8 , E9
REFER TO PG-POWER & PDU.
49
50
38
51
57
L
P
B
B
G
E105
B3
9
8
G
D
NEXT PAGE
CR
XC
B67
B437
1
12
B418
M66
38P
39P
B2
M13
20M
21M
E43
E22
: DATA LINE
NV : WITH NAVIGATION SYSTEM
ON : WITHOUT NAVIGATION SYSTEM
CR : WITH PRE-CRASH SEAT BELT OR RAS
XC : WITHOUT PRE-CRASH SEAT BELT AND RAS
TO LAN-CAN
39
40
CAN-H
CAN-L
BCM (BODY CONTROL MODULE)
M1
6
14
DATA LINK CONNECTOR
M60
M53
M216
3
15
LG
71
72
NAVI CONTROL UNIT : NV
AV CONTROL UNIT : ON
M210
M53 W
M60 W
M210 W
E8 W
E9 W
H.S.
B3 W , B437 BR
REFER TO THE FOLLOWING.
B2 , B418 -SUPER MULTIPLE JUNCTION (SMJ)
M1 -ELECTRICAL UNITS
TIWT2041E

GW-DEF-05

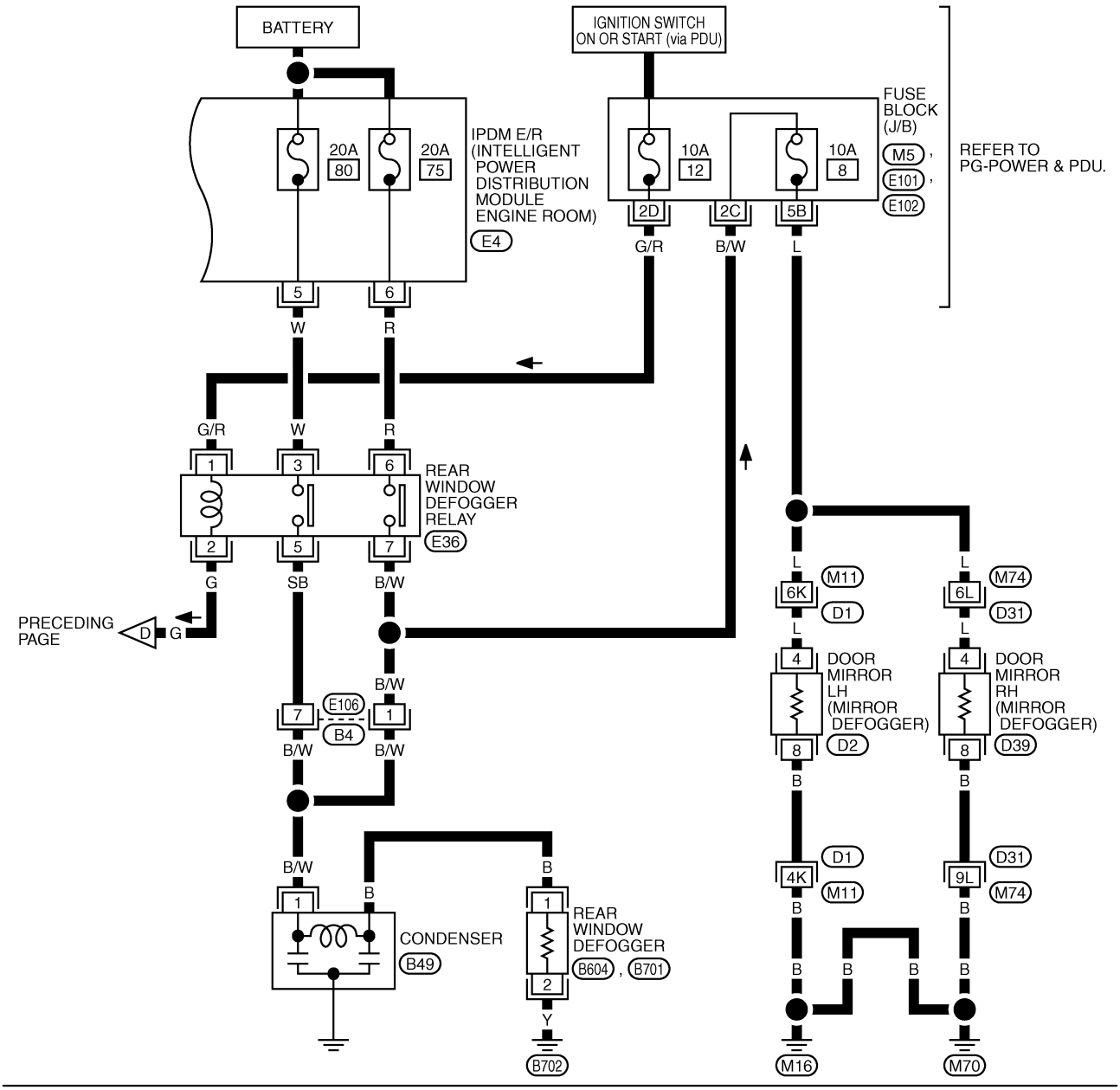

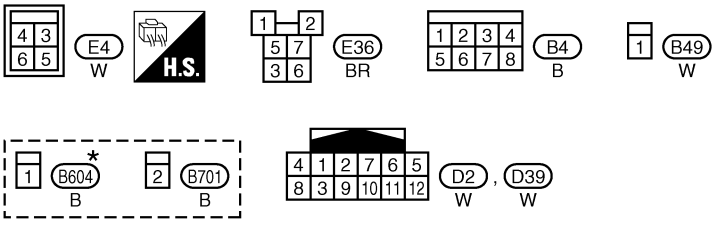

REFER TO THE FOLLOWING.
D1, D31 -SUPER MULTIPLE JUNCTION (SMJ)
M5, E101, E102 -FUSE BLOCK-JUNCTION BOX (J/B)

*: THIS CONNECTOR IS NOT SHOWN IN "HARNESS LAYOUT", PG SECTION.

TIWT2042E

Terminal and Reference Value for BCM

NIS0022M

Terminal	Wire color	Item	Signal Input/ Output	Condition	Voltage (V) (Approx.)
38	W	Ignition switch ON or START	Input	Ignition switch (ON or START position)	Battery voltage
39	L	CAN– H	Input/ Output	—	—
40	P	CAN– L	Input/ Output	—	—
42	P	Power source (Fuse)	Input	—	Battery voltage
52	B	Ground	—	—	0
55	W	Power source (Fusible link)	Input	—	Battery voltage

Terminal and Reference Value for IPDM E/R

NIS0022N

Terminal	Wire color	Item	Signal Input/ Output	Condition	Voltage (V) (Approx.)
5	W	Battery power supply	Output	—	Battery voltage
6	R	Battery power supply	Output	—	Battery voltage
38	B	Ground (Power)	—	—	0
49	L	CAN– H	Input/ Output	—	—
50	P	CAN– L	Input/ Output	—	—
51	B	Ground (Signal)	—	—	0
57	G	Rear window defogger relay control signal	Input	When rear window defogger switch is ON.	0
				When rear window defogger switch is OFF.	Battery voltage

CONSULT-II Function (BCM)

NIS0028Q

CONSULT-II can display each diagnostic item using the diagnostic test modes shown following.

BCM diagnostic test item	Check item diagnostic test mode	Content
REAR DEFOGGER	Data monitor	Displays the input data of BCM in real time.
	Active test	Gives a drive signal to a load to check the operation.

CONSULT-II START PROCEDURE

Refer to GI-38, "CONSULT-II Start Procedure"

DATA MONITOR

Display Item List

Monitor item "Operation"		Content
REAR DEF SW	"ON/OFF"	Displays "Press (ON)/others (OFF)" status determined with the rear window defogger switch.
IGN ON SW	"ON/OFF"	Displays "IGN (ON)/OFF" status determined with the ignition switch signal.

ACTIVE TEST

Display Item List

Test item	Content
REAR DEFOGGER	Gives a drive signal to the rear window defogger to activate it.

CONSULT-II Function (IPDM E/R)

NIS0028R

CONSULT-II can display each diagnostic item using the diagnostic test mode shown following.

IPDM E/R diagnostic test item	Check item diagnostic test mode	Content
REAR DEFOGGER	Data monitor	Displays the input data of BCM in real time.
	Active test	Gives a drive signal to a load to check the operation.

CONSULT-II START PROCEDURE

Refer to GI-38, "CONSULT-II Start Procedure"

DATA MONITOR

Monitored Item	Description
RR DEF REQ	Indicates [ON/OFF] condition of rear window defogger function by IPDM E/R.

ACTIVE TEST

Test Item	Description
REAR DEFOGGER	This test is able to check rear window defogger operation. Rear window defogger operates when "ON" on CONSULT-II screen is touched.

Work Flow

NIS0022P

1. Check the symptom and customer's requests.
2. Understand the outline of system. Refer to GW-71, "System Description" .
3. According to the trouble diagnosis chart, repair or replace the cause of the malfunction. Refer to GW-82, "Trouble Diagnoses Symptom Chart" .
4. Does rear window defogger operate normally? YES: GO TO 5, NO: GO TO 3.
5. INSPECTION END.

Trouble Diagnoses Symptom Chart

NIS0022Q

Make sure other systems using the signal of the following systems operate normally.

Symptom	Diagnoses / Service procedure	Refer to page
Rear window defogger and door mirror defogger do not operate.	1. Check BCM power supply and ground circuit	GW-83
	2. Check IPDM E/R auto active test	PG-23
	3. Check rear window defogger switch circuit	GW-84
	4. Check rear window defogger power supply circuit	GW-84
	5. Replace IPDM E/ R	PG-31
Rear window defogger does not operate but both of door mirror defogger operate.	1.Check rear window defogger circuit	GW-86
	2.Check filament	GW-92
Both of door mirror defogger does not operated but rear window defogger operates.	Check door mirror defogger power supply circuit	GW-87
Driver side door mirror defogger does not operate.	Check driver side door mirror defogger circuit	GW-89
Passenger side door mirror defogger does not operate.	Check passenger side door mirror defogger circuit	GW-90
Rear window defogger switch does not light, and rear window defogger is not displayed on the display. But rear window defogger operates.	Check rear window defogger signal	AV-249*1 AV-108*2
Rear window defogger switch does not light, but rear window defogger operates	Replace multi-function switch	ATC-123

*1: With navigation system
*2: Without navigation system

Check BCM Power Supply and Ground Circuit

NIS0022R

First perform the "SELF-DIAG RESULTS" in "BCM" with CONSULT-II, when perform the each trouble diagnosis. Refer to BCS-13, "CAN Communication Inspection Using CONSULT-II (Self-Diagnosis)" .

1. CHECK FUSE

- Check 15A fuse [No.1, located in the fuse block (J/B)]
- Check 10A fuse [No.21, located in the fuse block (J/B)]
- Check 50A fusible link (letter **F** located in the fuse and fusible link box).

NOTE:
Refer to GW-71, "Component Parts and Harness Connector Location" .

OK or NG

OK >> GO TO 2.
NG >> If fuse is blown out, be sure to eliminate cause of malfunction before installing new fuse. Refer to PG-3, "POWER SUPPLY ROUTING CIRCUIT" .

2. CHECK POWER SUPPLY CIRCUIT

Check voltage between BCM connector and ground.

Terminals			Condition of ignition switch	Voltage (V) (Approx.)
(+)		(–)		
BCM connector	Terminal			
M1	38	Ground	ON	Battery voltage
M2	42		OFF	
	55			

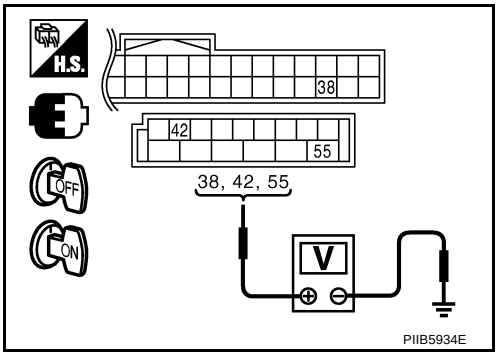

OK or NG

OK >> GO TO 3.
NG >> Check BCM power supply circuit for open or short.

3. CHECK GROUND CIRCUIT

1. Turn ignition switch OFF.
2. Disconnect BCM connector.
3. Check continuity between BCM connector and ground.

BCM connector	Terminal	Ground	Continuity
M2	52		Yes

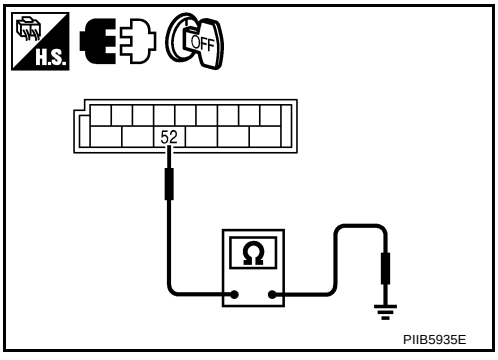

OK or NG

OK >> Power supply and ground circuit are OK.
NG >> Check BCM ground circuit for open or short.

Check Rear Window Defogger Switch Circuit

NIS0022S

1. CHECK REAR WINDOW DEFOGGER SWITCH OPERATION

With CONSULT-II

Check ("REAR DEF SW", "IGN ON SW") in DATA MONITOR mode with CONSULT-II.

When rear window defogger switch is turned to ON

REAR DEF SW : ON

When ignition switch is turned to ON

IGN ON SW : ON

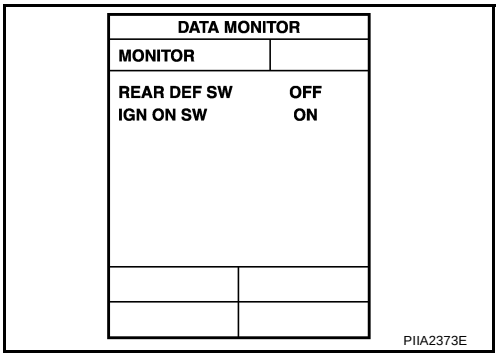

OK or NG

OK >> Rear window defogger switch is OK.
NG >> GO TO 2.

2. CHECK AV LINE

Check AV line. Refer to AV-249 (with navigation system), AV-108 (without navigation system).

OK or NG

OK >> Check the condition of harness and connector.
NG >> The diagnosis is continued.

Check Rear Window Defogger Power Supply Circuit

NIS0022T

1. CHECK FUSE

- Check 10A fuse [No.12, located in the fuse block (J/B)]
- Check 20A fuse (No.75, located in the IPDM E/R)
- Check 20A fuse (No.80, located in the IPDM E/R)

NOTE:

Refer to GW-71, "Component Parts and Harness Connector Location" .

OK or NG

OK >> GO TO 2.
NG >> If fuse is blown out, be sure to eliminate cause of malfunction before installing new fuse, refer to PG-3, "POWER SUPPLY ROUTING CIRCUIT" .

2. CHECK POWER SUPPLY CIRCUIT

1. Turn ignition switch OFF.
2. Remove rear window defogger relay.
3. Turn ignition switch ON.
4. Check voltage between rear window defogger relay connector and ground.

Terminals			Voltage (V) (Approx.)
(+)		(–)	
Rear window defogger relay connector	Terminal		
E36	1	Ground	Battery voltage
	3		
	6		

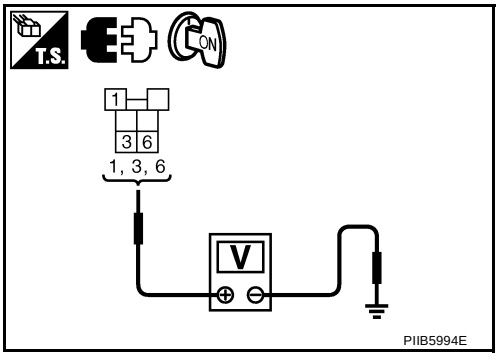

OK or NG

OK >> GO TO 3.
NG >> Repair or replace harness between fuse block (J/B) and rear window defogger relay.

3. CHECK REAR WINDOW DEFOGGER RELAY

Check rear window defogger relay.

Terminal		Condition	Continuity
Rear window defogger relay			
3	5	12V direct current supply between terminals 1 and 2.	Yes
		No current supply	No
6	7	12V direct current supply between terminals 1 and 2.	Yes
		No current supply	No

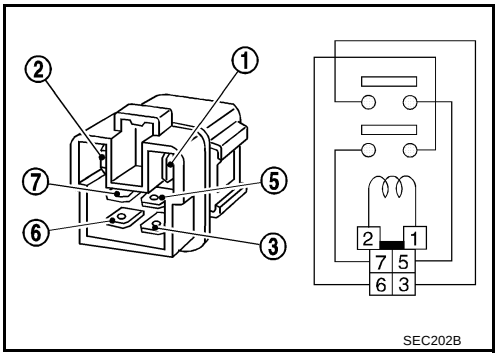

OK or NG

OK >> GO TO 4.
NG >> Replace rear window defogger relay.

4. CHECK REAR WINDOW DEFOGGER RELAY GROUND CIRCUIT

1. Turn ignition switch OFF.
2. Install rear window defogger relay.
3. Turn ignition switch ON.
4. Check voltage between IPDM E/R connector and ground.

Terminals			Condition of rear window defogger switch	Voltage (V) (Approx.)
(+)		(–)		
IPDM E/R connector	Terminal			
E9	57	Ground	ON (pressed)	0
			OFF	Battery voltage

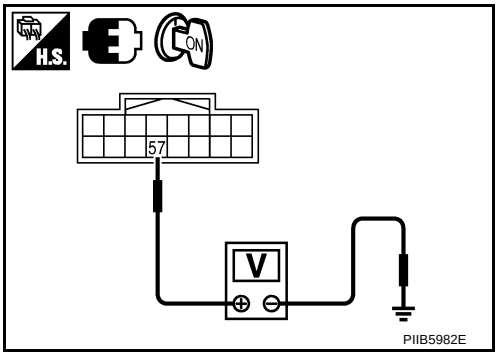

OK or NG

OK >> Rear window defogger power supply circuit is OK.
NG >> GO TO 5.

5. CHECK HARNESS CONTINUITY

1. Turn ignition switch OFF.
2. Disconnect IPDM E/R connector and rear window defogger relay.
3. Check continuity between IPDM E/R connector and rear window defogger relay connector.

A		B		Continuity
IPDM E/R connector	Terminal	Rear window defogger relay connector	Terminal	
E9	57	E36	2	Yes

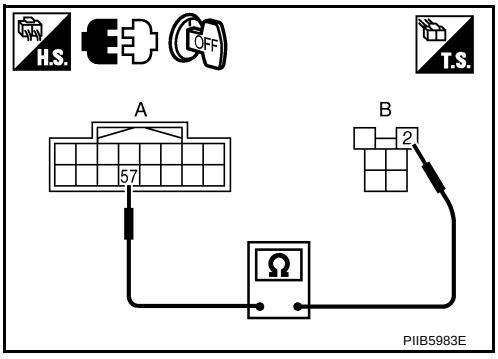

OK or NG

OK >> GO TO 6.
NG >> Repair or replace harness.

6. CHECK REAR WINDOW DEFOGGER RELAY OUTPUT SIGNAL

1. Connect IPDM E/R connector and rear window defogger relay.
2. Turn ignition switch ON.
3. Check voltage between IPDM E/R connector and ground.

Terminals			Voltage (V) (Approx.)
(+)		(–)	
IPDM E/R connector	Terminal		
E9	57	Ground	Battery voltage

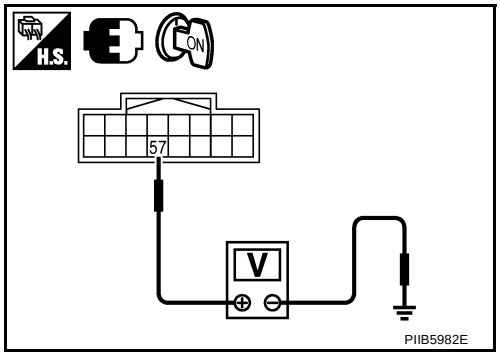

OK or NG

OK >> Check condition of harness and connector.
NG >> Replace IPDM E/R.

Check Rear Window Defogger Circuit

NIS0022U

1. CHECK POWER SUPPLY CIRCUIT

1. Turn ignition switch ON.
2. Check voltage between rear window defogger connector and ground.

Terminals			Condition of rear window defogger switch	Voltage (V) (Approx.)
(+)		(–)		
Rear window defogger connector	Terminal			
B604	1	Ground	ON	Battery voltage
			OFF	0

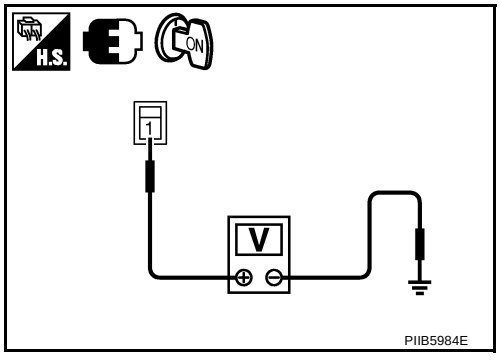

OK or NG

OK >> GO TO 2.
NG >> GO TO 3.

2. CHECK GROUND CIRCUIT

1. Turn ignition switch OFF.
2. Disconnect rear window defogger connector.
3. Check continuity between rear window defogger connector and ground.

Rear window defogger connector	Terminal	Ground	Continuity
B701	2		Yes

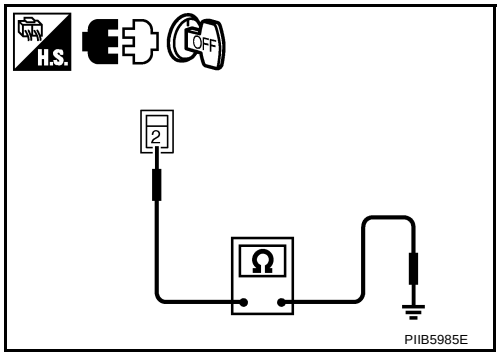

OK or NG

OK >> Check filament. Refer to GW-92, "Check Filament"
- If filament is OK, check condition of harness and connector.
- If filament is NG, repair filament.

NG >> Repair or replace harness between rear window defogger and ground.

3. CHECK HARNESS CONTINUITY 1

1. Turn ignition switch OFF.
2. Disconnect condenser and rear window defogger connector.
3. Check continuity between condenser and rear window defogger connector.

A		B		Continuity
Condenser	Terminal	Rear window defogger connector	Terminal	
	1	B604	1	Yes

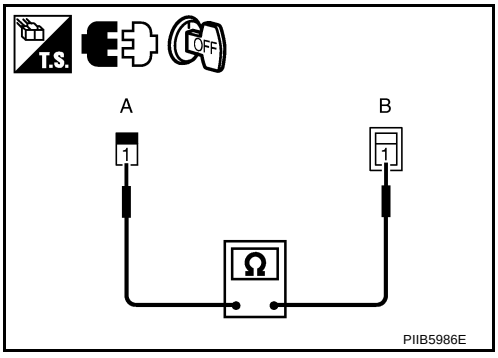

OK or NG

OK >> GO TO 4.
NG >> Replace condenser.

4. CHECK HARNESS CONTINUITY 2

1. Remove rear window defogger relay.
2. Check continuity between rear window defogger relay connector and condenser connector.

A		B		Continuity
Rear window defogger relay connector	Terminal	Condenser connector	Terminal	
E36	5	B49	1	Yes
	7			

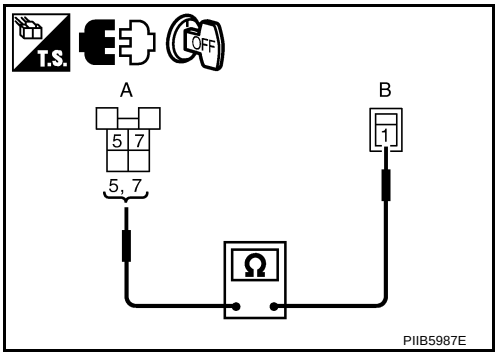

OK or NG

OK >> Check the condition of harness and connector.
NG >> Replace or repair harness between rear window defogger relay and condenser.

Check Door Mirror Defogger Power Supply Circuit

NIS0022V

1. CHECK FUSE

- Check 10A fuse [No.8, located in fuse block (J/B)]

NOTE:
Refer to GW-71, "Component Parts and Harness Connector Location" .

OK or NG

OK >> GO TO 2.
NG >> If fuse is blown out, be sure to eliminate cause of malfunction before installing new fuse. Refer to PG-3, "POWER SUPPLY ROUTING CIRCUIT" .

2. CHECK POWER SUPPLY CIRCUIT 1

1. Turn ignition switch ON.
2. Check voltage between fuse block (J/B) connector and ground.

Terminals			Condition of rear window defogger switch	Voltage (V) (Approx.)
(+)		(–)		
Fuse block connector	Terminal			
E101	2C	Ground	ON	Battery voltage
			OFF	0

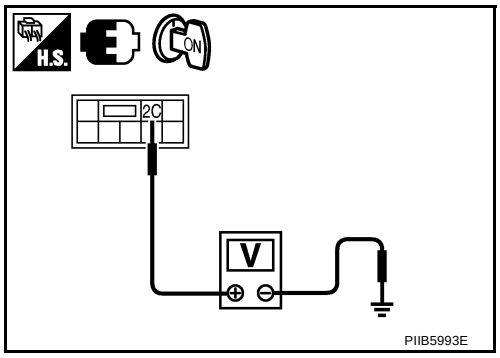

OK or NG

OK >> GO TO 3.
NG >> Repair or replace harness.

3. CHECK POWER SUPPLY CIRCUIT 2

Check voltage between fuse block (J/B) connector and ground.

Terminals			Condition of rear window defogger switch	Voltage (V) (Approx.)
(+)		(–)		
Fuse block connector	Terminal			
M5	5B	Ground	ON	Battery voltage
			OFF	0

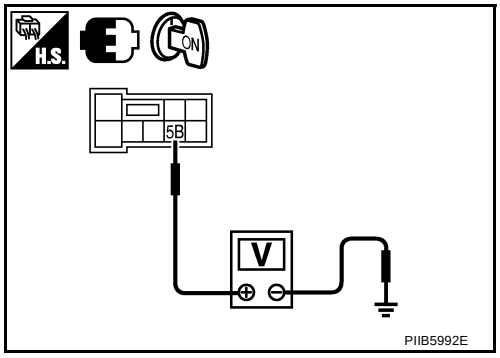

OK or NG

OK >> GO TO 4.
NG >> Replace fuse block (J/B).

4. CHECK DOOR MIRROR CIRCUIT

1. Turn ignition switch OFF.
2. Disconnect fuse block (J/B) and door mirror connector.
3. Check continuity between fuse block (J/B) connector and door mirror connector.

A		B		Continuity
Fuse block connector	Terminal	Door mirror connector	Terminal	
M5	5B	D2 (LH) D39 (RH)	4	Yes

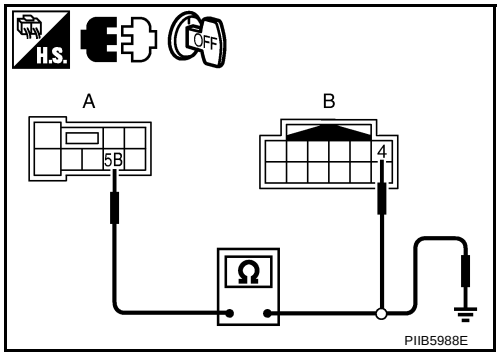

4. Check continuity between fuse block (J/B) connector and ground.

A		Ground	Continuity
Fuse block connector	Terminal		
M5	5B		No

OK or NG

OK >> GO TO 5.
NG >> Repair or replace harness between fuse block (J/B) and malfunctioning door mirror connector.

5. CHECK GROUND CIRCUIT

Check continuity between door mirror connector and ground.

Door mirror connector	Terminal	Ground	Continuity
D2 (LH) D39 (RH)	8		Yes

OK or NG

OK >> GO TO 6.
NG >> Repair or replace harness.

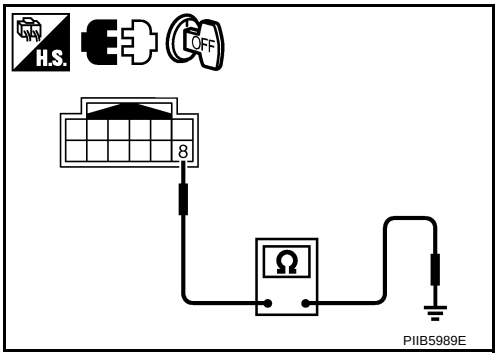

6. CHECK DOOR MIRROR DEFOGGER

1. Connect door mirror connector.
2. Check door mirror.

Door mirror connector	Terminal		Continuity
D2 (LH) D39 (RH)	4	8	Yes

OK or NG

OK >> Check condition of harness and connector.
NG >> Replace malfunctioning door mirror.

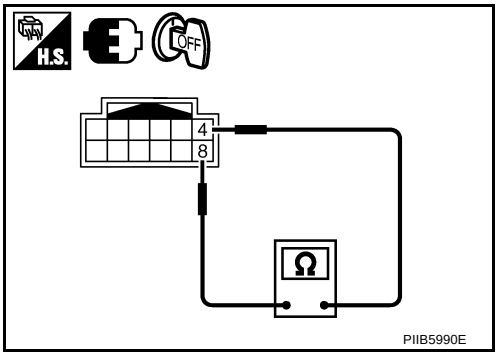

Check Driver Side Door Mirror Defogger Circuit

NIS0022W

1. CHECK POWER SUPPLY CIRCUIT

1. Turn ignition switch OFF.
2. Disconnect door mirror LH connector.
3. Turn ignition switch ON.
4. Check voltage between door mirror LH connector and ground.

Terminals			Condition of rear window defogger switch	Voltage (V) (Approx.)
(+)		(–)		
Door mirror LH connector	Terminal			
D2	4	Ground	ON	Battery voltage
			OFF	0

OK or NG

OK >> GO TO 2.
NG >> Repair or replace harness between fuse block (J/B) and door mirror LH.

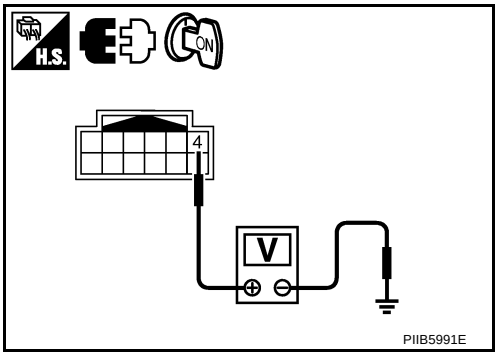

2. CHECK GROUND CIRCUIT

1. Turn ignition switch OFF.
2. Check continuity between door mirror LH connector and ground.

Door mirror LH connector	Terminal	Ground	Continuity
D2	8		Yes

OK or NG

OK >> GO TO 3.
NG >> Repair or replace harness between door mirror LH and ground.

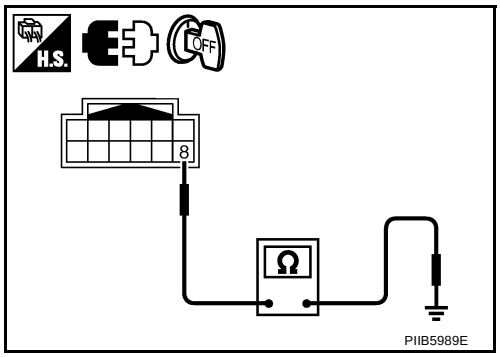

3. CHECK DOOR MIRROR DEFOGGER

1. Connector door mirror LH connector.
2. Check door mirror LH.

Door mirror LH connector	Terminal		Continuity
D2	4	8	Yes

OK or NG

OK >> Check condition of harness and connector.
NG >> Replace door mirror LH.

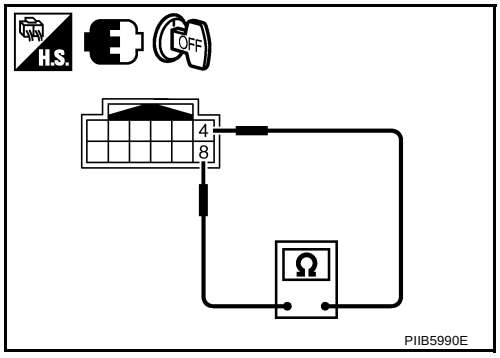

Check Passenger Side Door Mirror Defogger Circuit

NIS0022X

1. CHECK POWER SUPPLY CIRCUIT

1. Turn ignition switch OFF.
2. Disconnect door mirror RH connector.
3. Turn ignition switch ON.
4. Check voltage between door mirror RH connector and ground.

Terminals			Condition of rear window defogger switch	Voltage (V) (Approx.)
(+)		(–)		
Door mirror RH connector	Terminal			
D39	4	Ground	ON	Battery voltage
			OFF	0

OK or NG

OK >> GO TO 2.
NG >> Repair or replace harness between fuse block (J/B) and door mirror RH.

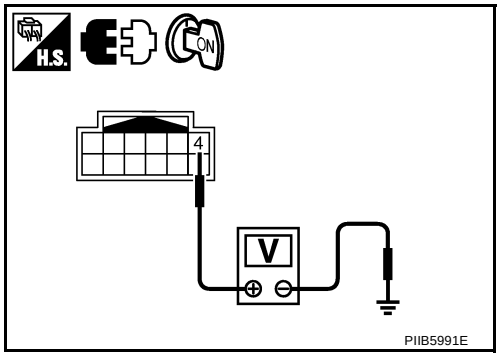

2. CHECK GROUND CIRCUIT

1. Turn ignition switch OFF.
2. Check continuity between door mirror RH connector and ground.

Door mirror RH connector	Terminal	Ground	Continuity
D39	8		Yes

OK or NG

OK >> GO TO 3.
NG >> Repair or replace harness between door mirror RH and ground.

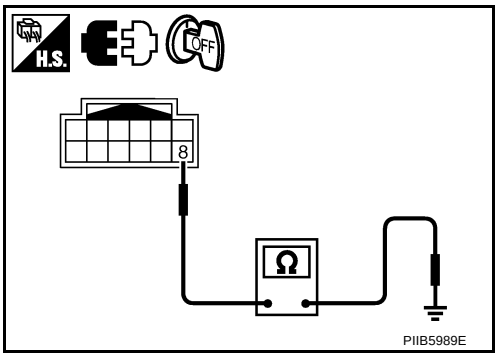

3. CHECK DOOR MIRROR DEFOGGER

1. Connector RH door mirror connector.
2. Check door mirror RH.

Door mirror RH connector	Terminal		Continuity
D39	4	8	Yes

OK or NG

OK >> Check condition of harness and connector.
NG >> Replace door mirror.

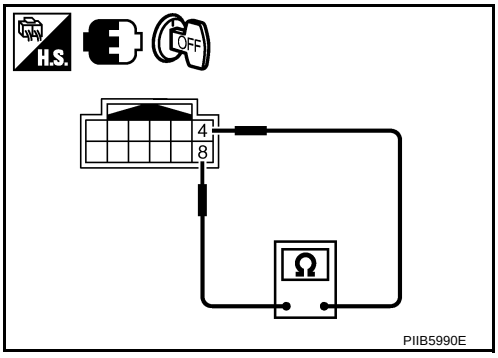

Check Filament

NIS0022Y

1. When measuring voltage, wrap tin foil around the top of the negative probe. Then press the foil against the wire with your finger.

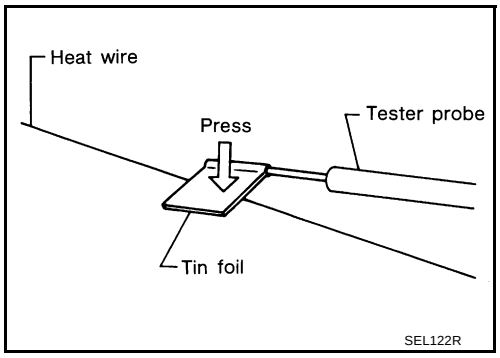

2. Attach probe circuit tester (in Volt range) to middle portion of each filament.

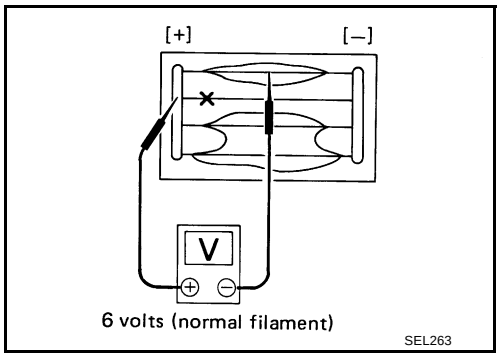

3. If a filament is burned out, circuit tester registers 0 or battery voltage.
4. To locate burned out point, move probe to left and right along filament. Test needle will swing abruptly when probe passes the point.

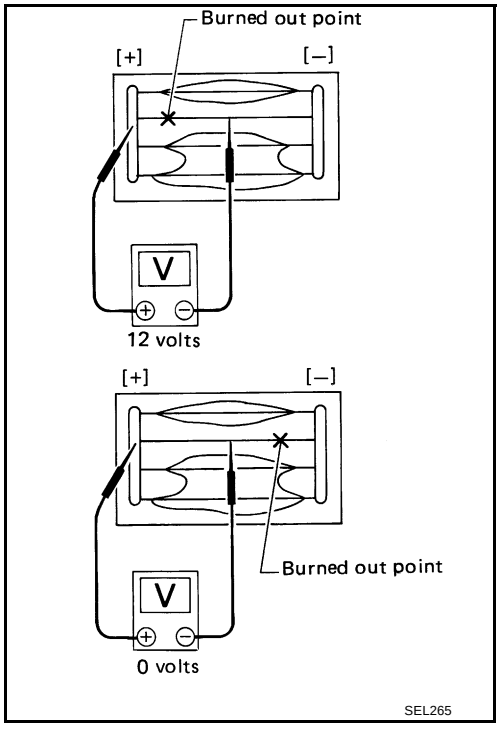

Filament Repair

NIS0022Z

REPAIR EQUIPMENT

- Conductive silver composition (Dupont No. 4817 or equivalent)
- Ruler 30 cm (11.8 in) long
- Drawing pen
- Heat gun
- Alcohol
- Cloth

REPAIRING PROCEDURE

1. Wipe broken heat wire and its surrounding area clean with a cloth dampened in alcohol.
2. Apply a small amount of conductive silver composition to tip of drawing pen.
   Shake silver composition container before use.
3. Place ruler on glass along broken line. Deposit conductive silver composition on break with drawing pen. Slightly overlap existing heat wire on both sides [preferably 5 mm (0.20 in)] of the break.

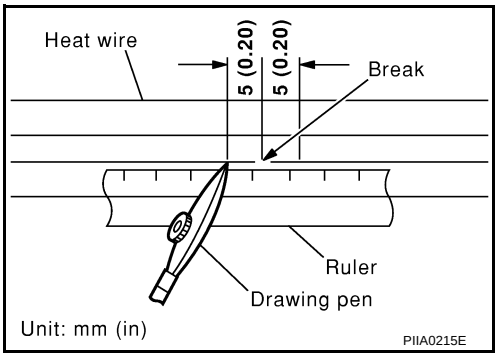

4. After repair has been completed, check repaired wire for continuity. This check should be conducted 10 minutes after silver composition is deposited.
   Do not touch repaired area while test is being conducted.

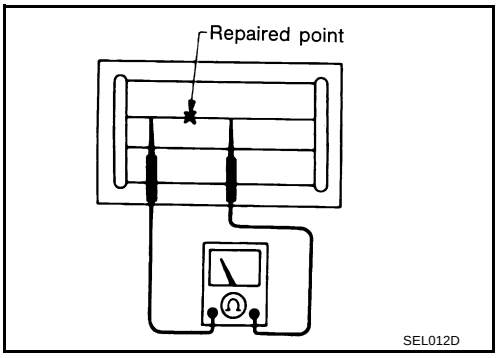

5. Apply a constant stream of hot air directly to the repaired area for approximately 20 minutes with a heat gun. A minimum distance of 3 cm (1.2 in) should be kept between repaired area and hot air outlet.
   If a heat gun is not available, let the repaired area dry for 24 hours.

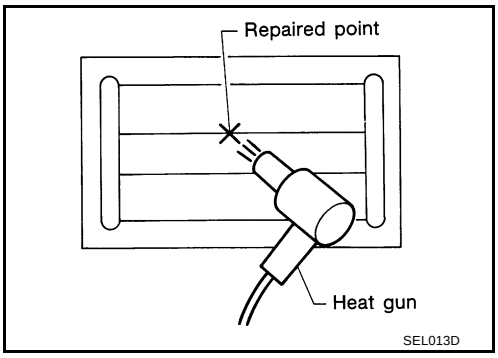

REVERSE INTERLOCK DOOR MIRROR SYSTEM

PFP:28548

Component Parts and Harness Connector Location

NIS00230

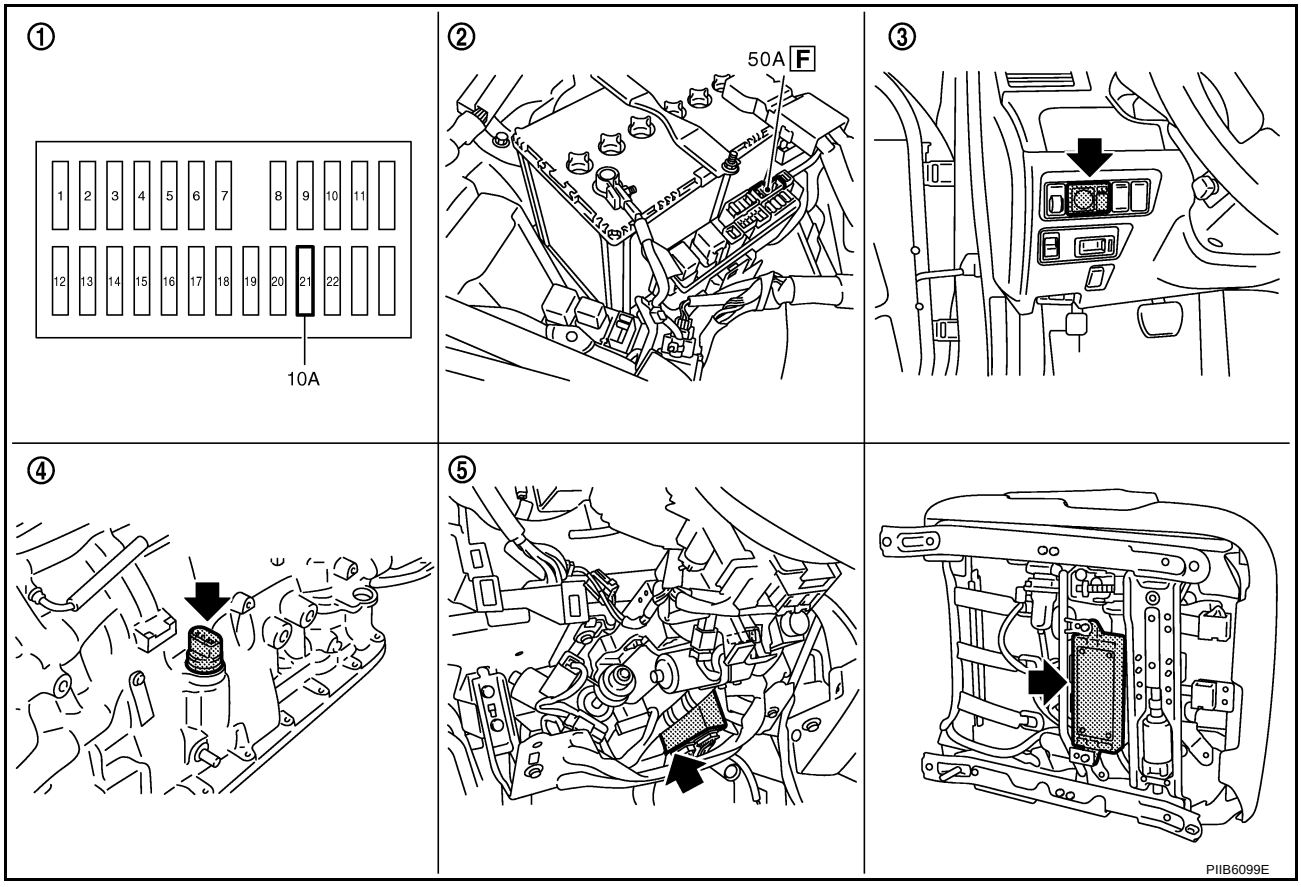

1.	Fuse block (J/B)	2.	Fusible link	3.	Door mirror remote control switch M95
4.	TCM (A/T assembly) F42	5.	Automatic drive positioner control unit M6, M7 (view with the instrament lower panel LH removed)	6.	Driver seat control unit B204, B205

System Description

NIS00231

Select one of the door mirror faces by change over switch, and then set the selected mirror face downward/inward.
This operation is synchronized with the R position operation of A/T control device.

OPERATION CONDITIONS

- Ignition switch : ON
- Changeover switch : Select either left or right
- A/T control device : R position

During the reverse interlock door mirror system, if all of the above conditions are not satisfied, mirror face returns to original angle.

MIRROR UNGLE MEMORY FUNCTION

- During the reverse interlock door mirror operation, the mirror angle can be changed. After adjustment, the mirror face positions can be memorized (2 positions). For memory setting, Refer to SE-12, "MEMORY OPERATION"
- Initial setting is downward 7°, inward 1° (both of left and right)

Power supplied at all times

- through 50A fusible link (letter F, located in the fuse block and fusible link)
- to automatic drive positioner control unit terminal 39 and
- to driver seat control unit terminal 33.

- through 10A fuse [No.21, located in the fuse block (J/B)]
- to automatic drive positioner control unit terminal 34 and
- to driver seat control unit terminal 40.

Ground is supplied

- to automatic drive positioner control unit terminals 40 and 48.
- through body grounds M16 and M70.
- to driver seat control unit terminals 32 and 48.
- through body grounds B5, B40 and B131.
- to door mirror remote control switch terminal 13
- through body grounds M16 and M70.

REVERSE INTERLOCK DOOR MIRROR SYSTEM OPERATION

- When the ignition switch is in ON position, A/T control device into R position. Then TCM (in A/T assembly) detects it and sends the A/T shift position signal to the driver seat control unit via DATA LINE (CAN H, CAN L).
- When selecting either left and right changeover switch, the automatic drive position control unit judges which door mirror is selected according to the voltage of terminals 2 and 18. And then, it sends the signal to driver seat control unit via communication signal.
- When the driver seat control unit receives the A/T shift position signal and changeover switch signal, it sends the operation signal to the automatic drive positioner control unit using the communication signal so that the each mirror sensor voltage stays in a specified value.
- Door mirror (RH) selected
  Supply the power from terminals 14, 15 and 30 to door mirror (RH) terminals 5, 6 and 7 so that the voltage of terminals 5 and 21 stays in a specified value. Then, adjust the mirror angle.
- Door mirror (LH) selected
  Supply the power from terminals 16, 31 and 32 to door mirror (LH) terminals 5, 6 and 7 do that the voltage of terminals 6 and 22 is the specified value. Then, adjust the mirror angle.

CAN Communication System Description

NIS00232

CAN (Controller Area Network) is a serial communication line for real time application. It is an on-vehicle multiplex communication line with high data communication speed and excellent error detection ability. Many electronic control units are equipped onto a vehicle, and each control unit shares information and links with other control units during operation (not independent). In CAN communication, control units are connected with 2 communication lines (CAN H line, CAN L line) allowing a high rate of information transmission with less wiring. Each control unit transmits/receives data but selectively reads required data only.

CAN Communication Unit

NIS00233

Refer to LAN-50, "CAN System Specification Chart"

Schematic

NIS00234

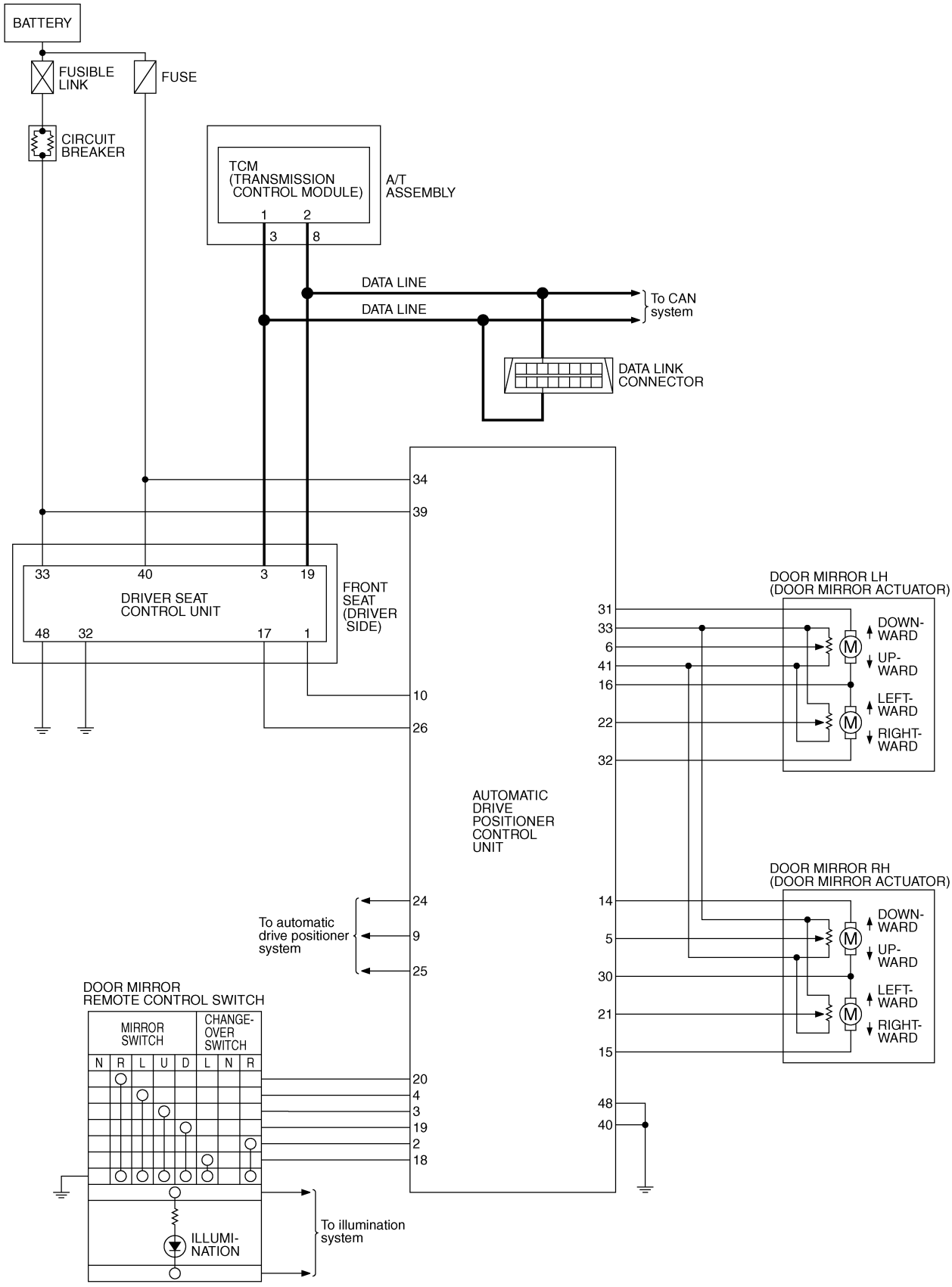

Wiring Diagram — MIRROR —

NIS00235

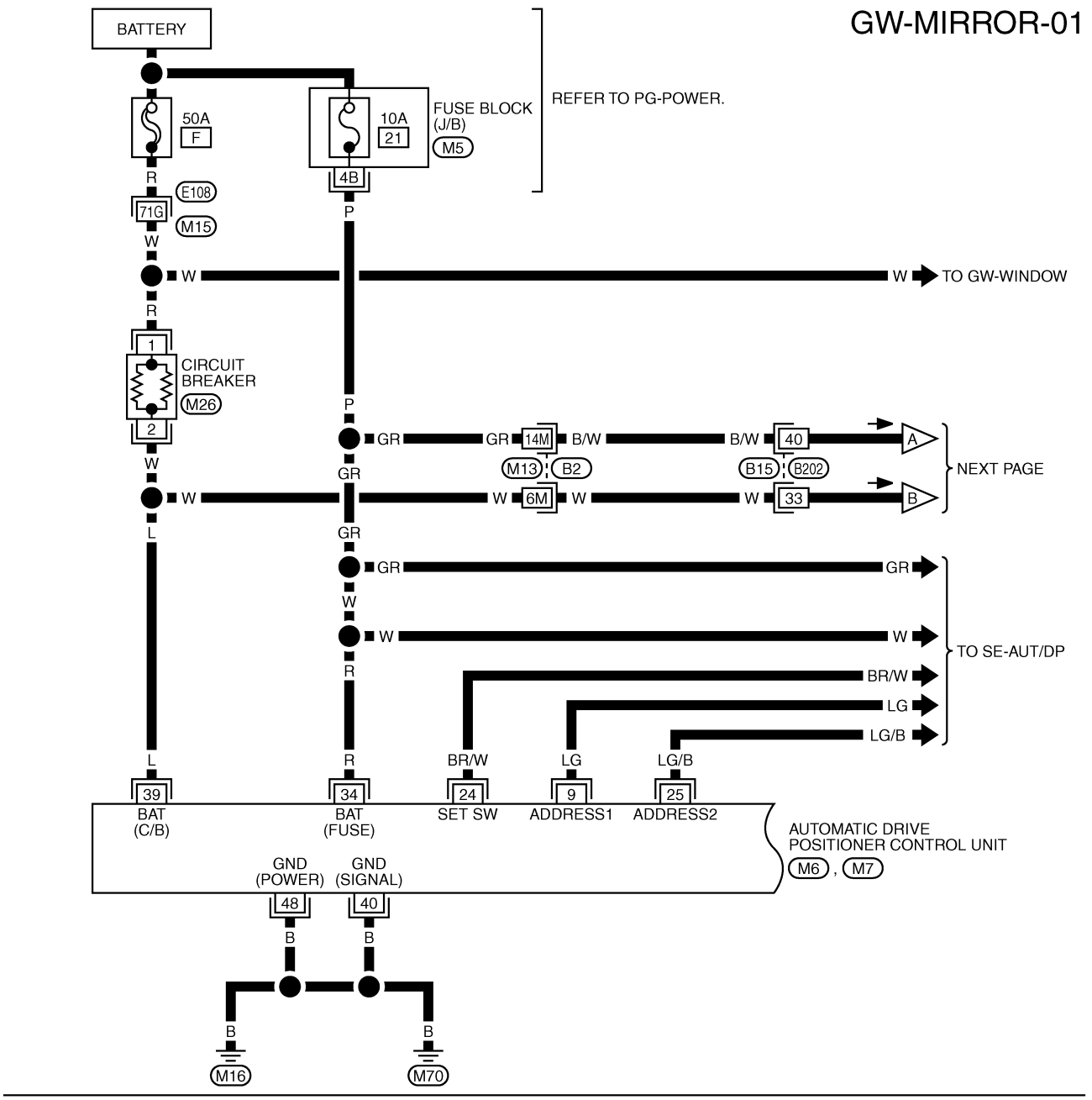

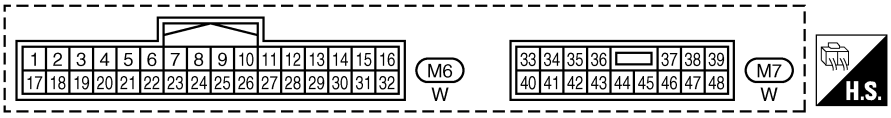

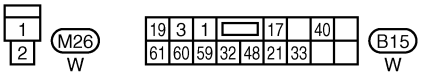

REFER TO THE FOLLOWING.

E108 , B2 -SUPER MULTIPLE JUNCTION (SMJ)

M5 -FUSE BLOCK-JUNCTION BOX (J/B)

TIWT2113E

GW-MIRROR-02

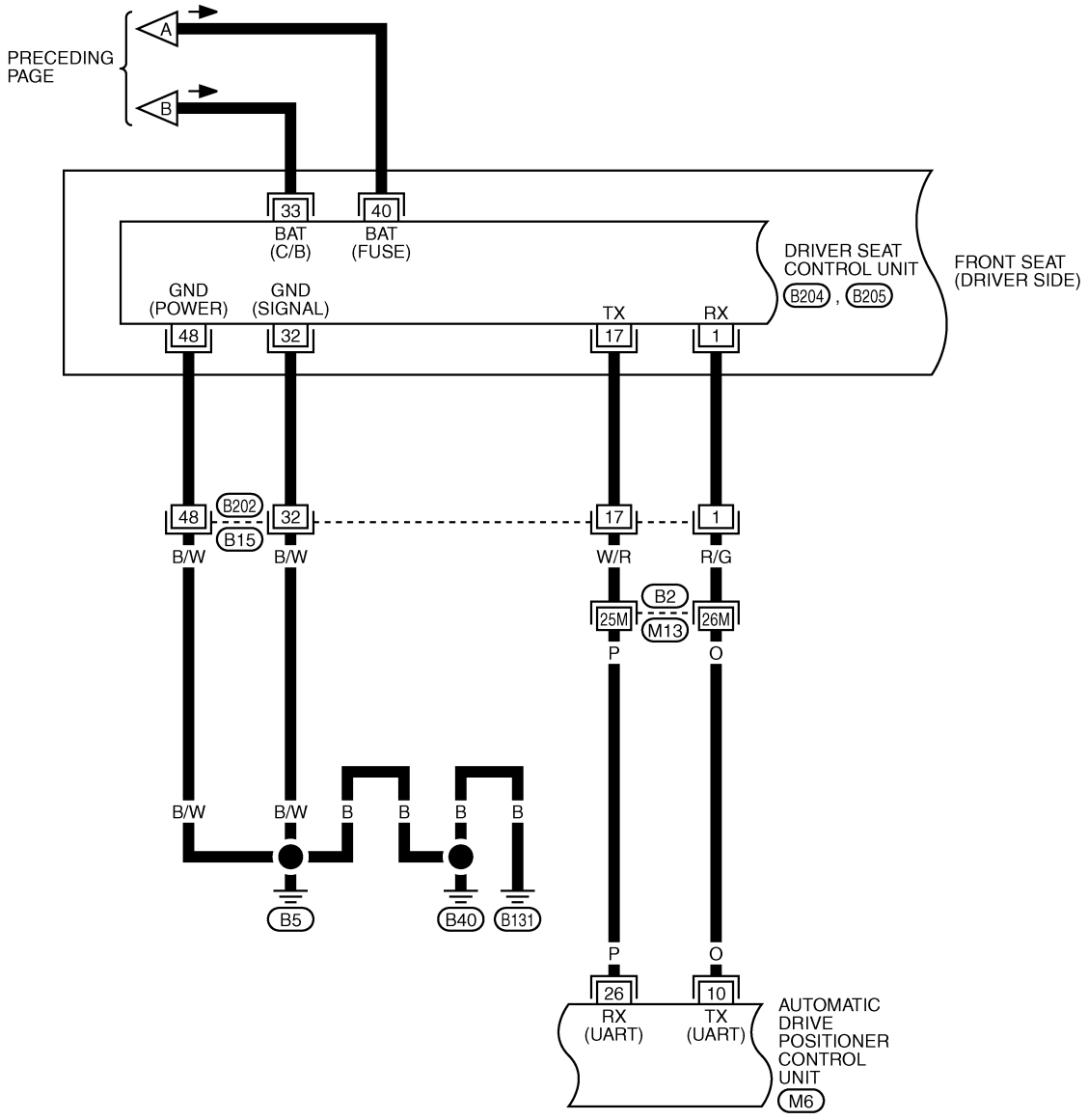

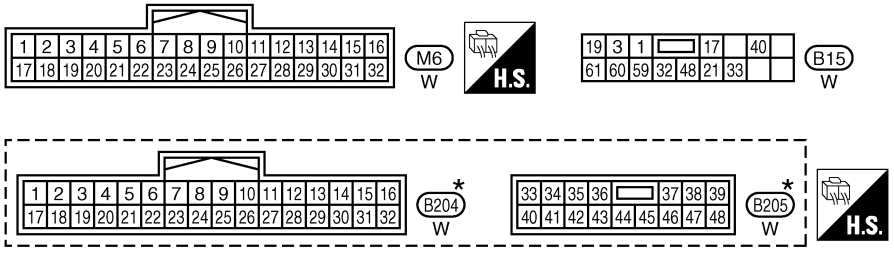

REFER TO THE FOLLOWING.
B2 -SUPER MULTIPLE JUNCTION (SMJ)

*: THIS CONNECTOR IS NOT SHOWN IN "HARNESS LAYOUT", PG SECTION.

TIWT2114E

GW-MIRROR-03

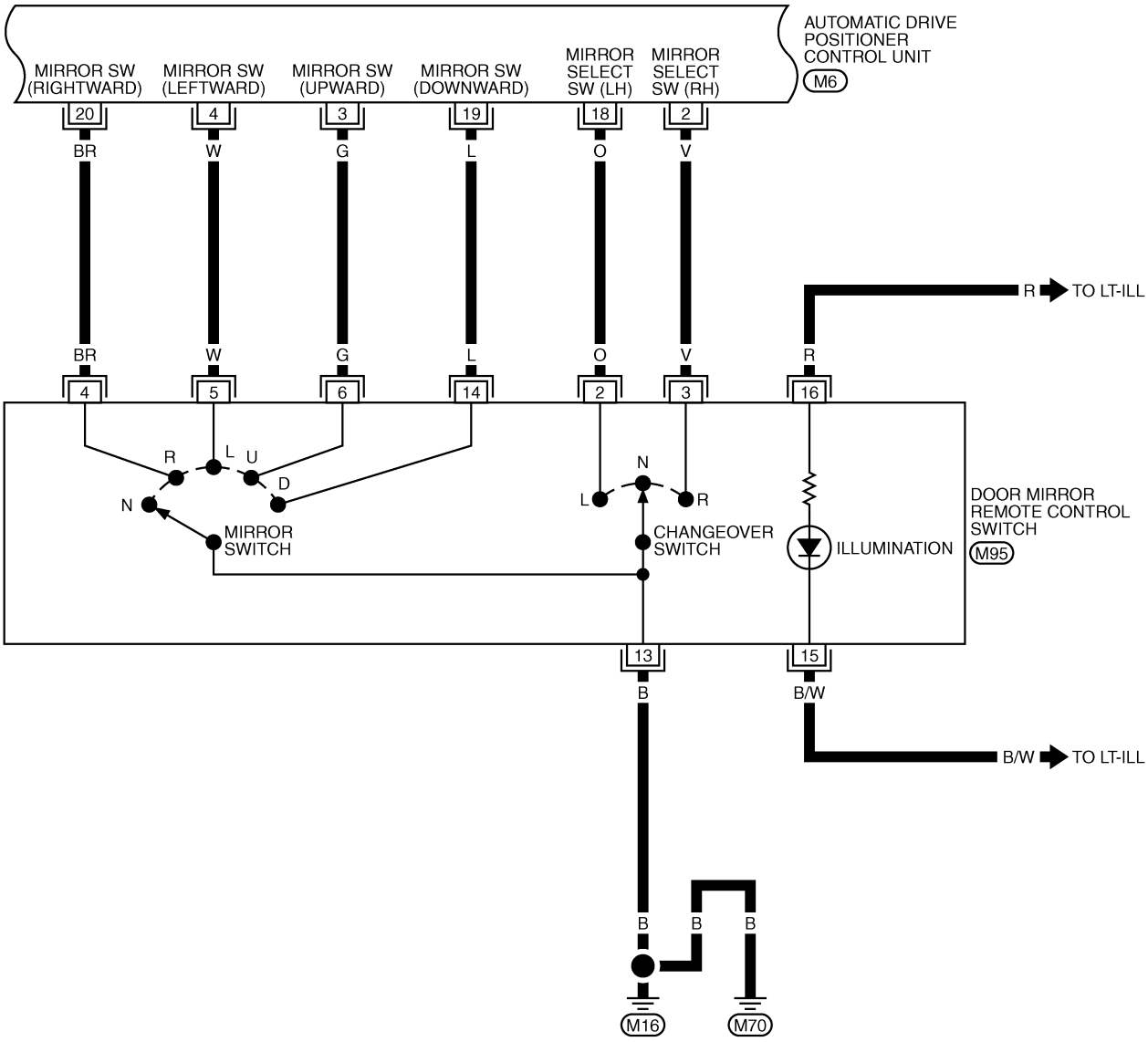

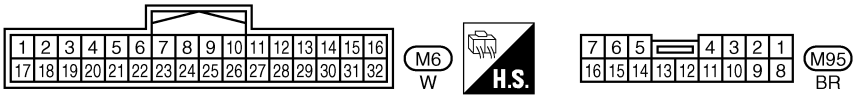

TIWT2115E

GW-MIRROR-04

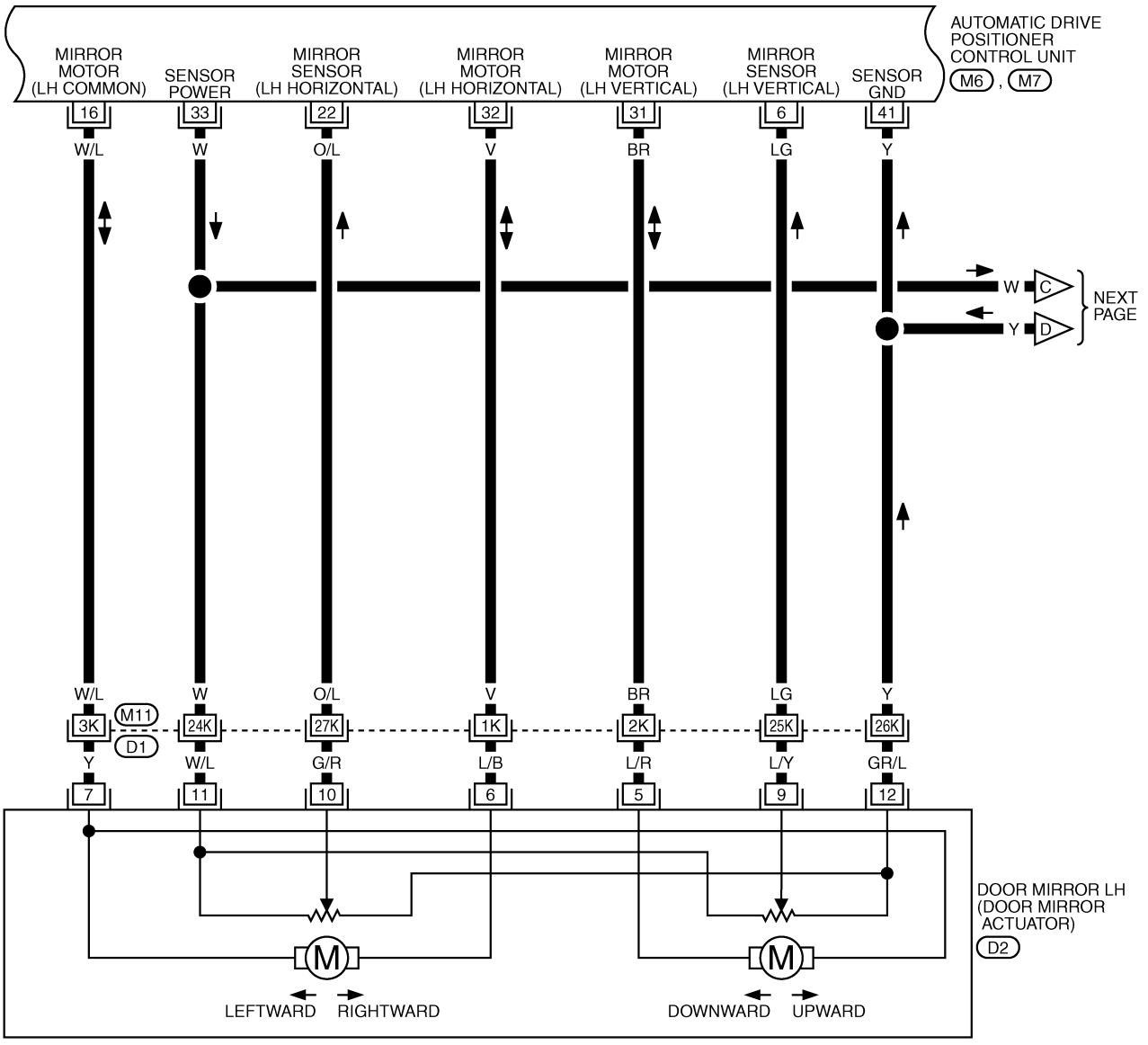

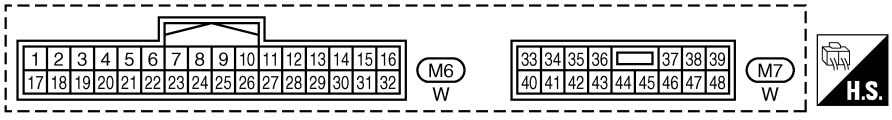

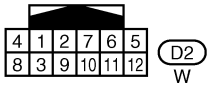

REFER TO THE FOLLOWING.

D1 -SUPER MULTIPLE JUNCTION (SMJ)

TIWT1361E

GW-MIRROR-05

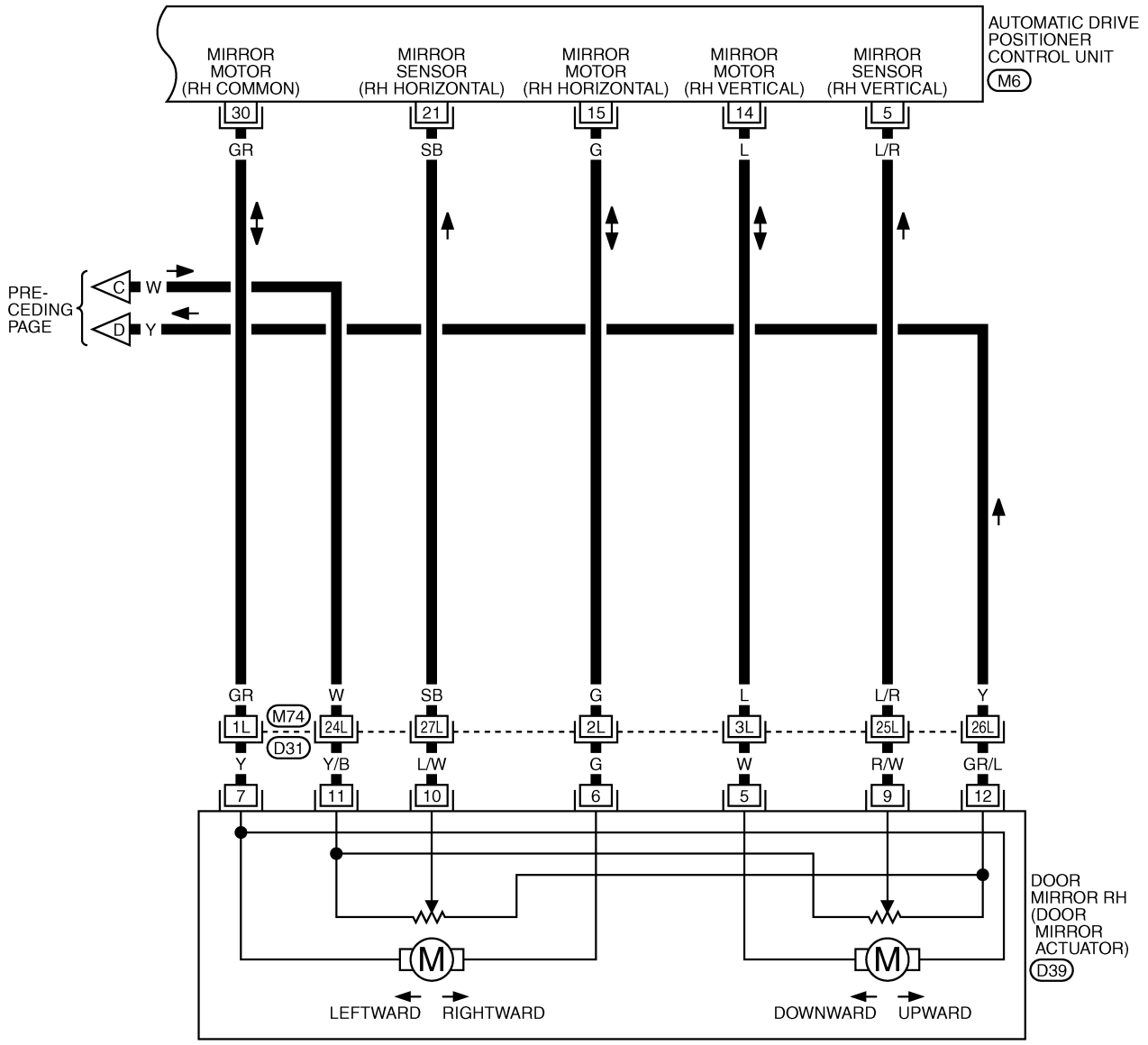

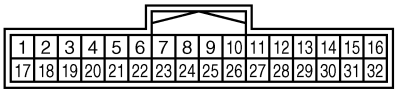

M6
W

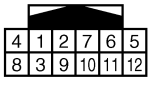

D39
W

REFER TO THE FOLLOWING.
D31 -SUPER MULTIPLE JUNCTION (SMJ)

TIWT1362E

GW-MIRROR-06

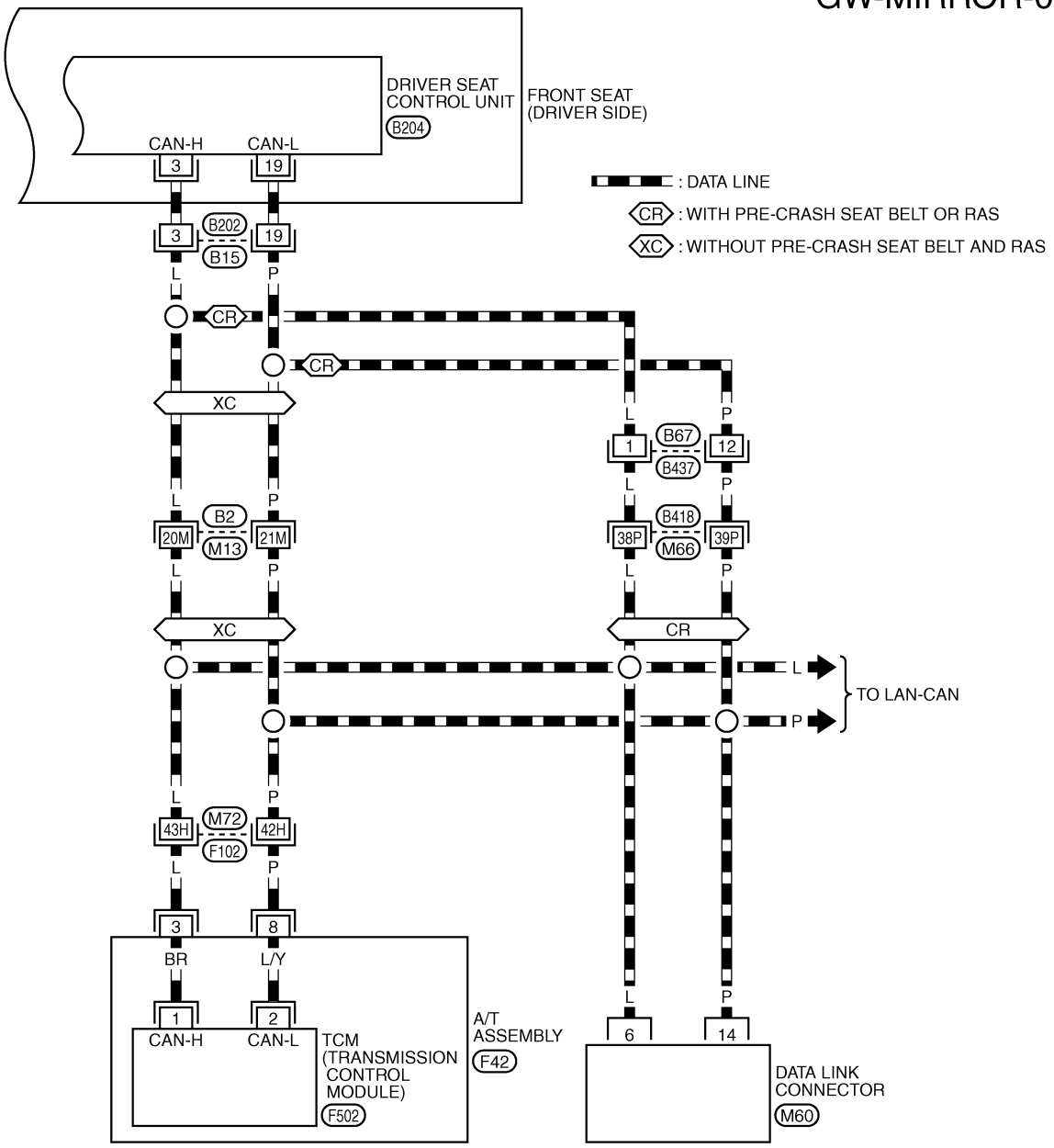

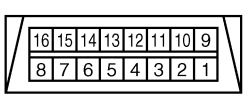

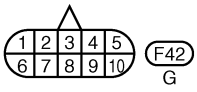

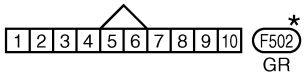

REFER TO THE FOLLOWING.
F102 , B2 , B418 -SUPER MULTIPLE JUNCTION (SMJ)

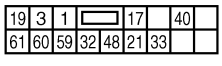

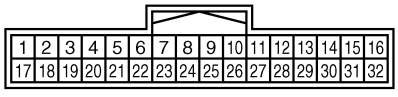

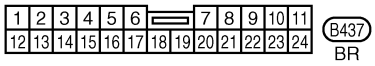

*: THIS CONNECTOR IS NOT SHOWN IN "HARNESS LAYOUT", PG SECTION.

TIWT2116E

Terminals and Reference Values for Automatic Drive Positioner Control Unit NIS00236

Terminal	Wire color	Item	Signal Input/Output	Condition		Voltage (V) (Approx.)
2	V	Changeover switch RH signal	Input	When changeover switch position	RH	0
					Other than above	5
3	G	Mirror switch UP signal	Input	When mirror switch position	UP	0
					Other than above	5
4	W	Mirror switch LEFT signal	Input	When mirror switch position	LEFT	0
					Other than above	5
5	L/R	Door mirror RH sensor vertical signal	Input	When door mirror RH mirror face position	Close to perk	4.2
					Close to valley	0.5
6	LG	Door mirror LH sensor vertical signal	Input	When door mirror LH mirror face position	Close to perk	4.2
					Close to valley	0.5
10	O	UART LINE (TX)	Input/Output	Tilt switch operated		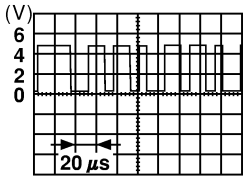 SKIA0175E
14	L	Door mirror RH mirror motor UP signal	Output	When door mirror RH mirror motor operation	UP	Battery voltage
					Other than above	0
15	G	Door mirror RH mirror motor LEFT signal	Output	When door mirror RH mirror motor operation	LEFT	Battery voltage
					Other than above	0
16	W/L	Door mirror LH mirror motor RIGHT or DOWN signal	Output	When door mirror LH mirror motor operation	RIGHT or DOWN	Battery voltage
					Other than above	0
18	O	Changeover switch LH signal	Input	When changeover switch position	LH	0
					Other than above	5
19	L	Mirror switch DOWN signal	Input	When mirror switch position	DOWN	0
					Other than above	5
20	BR	Mirror switch RIGHT signal	input	When mirror switch position	RIGHT	0
					Other than above	5
21	SB	Door mirror RH sensor horizontal signal	Input	When door mirror RH mirror face position	Close to left edge	3.5
					Close to right edge	0.5
22	O/L	Door mirror LH sensor horizontal signal	Input	When door mirror LH mirror face position	Close to left edge	0.5
					Close to right edge	3.5
26	P	UART LINE (RX)	Input/Output	Tilt switch operated		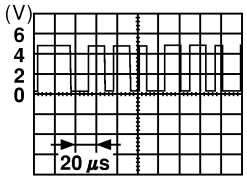 SKIA0175E
30	GR	Door mirror LH mirror motor RIGHT or DOWN signal	Output	When door mirror LH mirror motor operation	RIGHT or DOWN	Battery voltage
					Other than above	0

Terminal	Wire color	Item	Signal Input/ Output	Condition		Voltage (V) (Approx.)
31	BR	Door mirror LH mirror motor UP signal	Output	When door mirror LH mirror motor operation	UP	Battery voltage
					Other than above	0
32	V	Door mirror LH mirror motor LEFT signal	Output	When door mirror LH mirror motor operation	LEFT	Battery voltage
					Other than above	0
33	W	Mirror sensor power supply	Output	—		Battery voltage
34	R	Power supply (fuse)	Input	—		Battery voltage
39	L	Power supply (fusible link)	Input	—		Battery voltage
40	B	Ground (signal)	—	—		0
41	Y	Sensor ground	—	—		0
48	B	Ground (power)	—	—		0

Terminals and Reference Values for Driver Seat Control Unit

NIS00237

Terminal	Wire color	Item	Signal Input/ Output	Condition	Voltage (V) (Approx.)
1	R/G	UART LINE (RX)	Input/ Output	Tilt switch operated	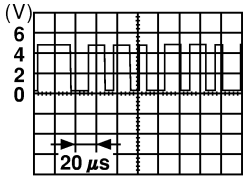 SKIA0175E
3	L	CAN-H	Input/ Output	—	—
17	W/R	UART LINE (TX)	Input/ Output	Tilt switch operated	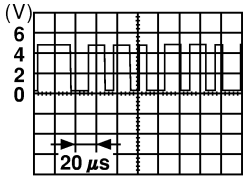 SKIA0175E
19	P	CAN-L	Input/ Output	—	—
32	B/W	Ground (signal)	—	—	0
33	W	Power supply (fusible link)	Input	—	Battery voltage
40	B/W	Power supply (fuse)	Input	—	Battery voltage
48	B/W	Ground (power)	—	—	0

CONSULT-II Function (AUTO DRIVE POS.)

NIS00238

CONSULT-II can display each diagnostic item using the diagnostic test modes shown following.

CONSULT-II diagnosis items	Inspection item, self-diagnosis mode		Content	Refer to page
AUTO DRIVE POSITIONER	WORK SUPPORT*1		Changes the setting for each function.	SE-39
	SELF–DIG RESULTS		Check the self-diagnosis results.	SE-37
	DATA MONITOR	Selection from menu	Displays the input data to driver seat control unit and automatic driving positioned control unit on real-time basis.	SE-38
	CAN DIAGNOSTIC SUPPORT MONITOR		The results of transmit / receive diagnosis of CAN communication can be read	LAN-13
	ACTIVE TEST*2		Gives a drive signal to a load to check the operation.	SE-39
	DRIVER SEAT CONTROL UNIT PART NUMBER		Displays driver seat control unit part No.	—

*1: For setting automatic drive positioner functions only.
*2: During vehicle driving, do not perform active test.

CONSULT-II START PROCEDURE

Refer to GI-38, "CONSULT-II Start Procedure"

DATA MONITOR

Selection from Menu

Monitor item [OPERATION or UNIT]		Contents
MIR CON SW–UP	"ON/OFF"	ON/OFF status judged from the door mirror remote control switch (UP) signal is displayed.
MIR CON SW–DN	"ON/OFF"	ON/OFF status judged from the door mirror remote control switch (DOWN) signal is displayed.
MIR CON SW–RH	"ON/OFF"	ON/OFF status judged from the door mirror remote control switch (RIGHT) signal is displayed.
MIR CON SW–LH	"ON/OFF"	ON/OFF status judged from the door mirror remote control switch (LEFT) signal s displayed.
MIR CHNG SW–R	"ON/OFF"	ON/OFF status judged from the door mirror remote control switch (switching to RIGHT) signal is displayed.
MIR CHNG SW–L	"ON/OFF"	ON/OFF status judged from the door mirror remote control switch (switching to LEFT) signal is displayed.
SET SW	"ON/OFF"	ON/OFF status judged from the setting switch signal is displayed.
MEMORY SW1	"ON/OFF"	ON/OFF status judged from the seat memory switch 1 signal is displayed.
MEMORY SW2	"ON/OFF"	ON/OFF status judged from the seat memory switch 2 signal is displayed.
MIR/SE RH R–L	"V"	Voltage output from RH door mirror sensor (LH/RH) is displayed.
MIR/SE RH U–D	"V"	Voltage output from RH door mirror sensor (UP/DOWN) is displayed.
MIR/SE LH R–L	"V"	Voltage output from LH door mirror sensor (LH/RH) is displayed.
MIR/SE LH U–D	"V"	Voltage output from LH door mirror sensor (UP/DOWN) is displayed.

ACTIVE TEST

CAUTION:

During vehicle driving, do not perform active test.

NOTE:

If active test is performed, reset seat memory and key fob interlock drive positioner after performing work.

Display Item List

Test item	Description
MIRROR MOTOR RH	The RH mirror motor moves the mirror UP/DOWN and LEFT/RIGHT by receiving the drive signal.
MIRROR MOTOR LH	The LH mirror motor moves the mirror UP/DOWN and LEFT/RIGHT by receiving the drive signal.

Work Flow

NIS00239

1. Check the symptom and customer's requests.
2. Understand the system description. Refer to GW-94, "System Description" .
3. According to the trouble diagnosis chart, repair or replace the cause of the malfunction. Refer to GW-106, "Symptom Chart"
4. Does reverse interlock door mirror system operate normally?
   Yes , GO TO 5.
   No, GO TO 3.
5. INSPECTION END

Symptom Chart

NIS0023A

Symptom	Diagnoses / service procedure	Reference page
Reverse interlock door mirror does not operate.	1. Check seat set switch circuit	SE-81
	2. Check changeover switch circuit	GW-107
	3. Check mirror switch circuit	GW-109
	4. Check A/T control device R position signal circuit	GW-117
	5. Check mirror motor circuit	GW-111
	6. Check mirror sensor circuit	GW-114
	7. Replace automatic drive positioner control unit	SE-11
● At reverse interlock door mirror system operation, mirror angle is not in the setting position ● After finishing the reverse interlock door mirror system. Operation, mirror angle does not return to the original position	1. Check mirror sensor circuit	GW-114
	2. Check A/T control device R position signal circuit	GW-117
	3. Replace automatic drive positioner control unit	SE-11
None of the door mirror can be operated using mirror switch.	Check mirror switch circuit	GW-109
A part of the remote control door mirror does not operated.	1. Check mirror switch circuit	GW-109
	2. Check door mirror circuit	GW-109
Mirror remote control switch can not be switched right and left.	1. Check changeover switch circuit	GW-107
	2. Check mirror switch circuit	GW-109

Check Changeover Switch Circuit

NIS0023B

1. CHECK CHANGEOVER SWITCH SIGNAL

With CONSULT-II

Check the operation on (MIR CHNG SW-R" or "MIR CHNG SW-L) in the DATA MONITOR.

Monitor item [OPERATION or UNIT]		Contents
MIR CHNG SW–R	"ON/ OFF"	ON/OFF status judged from the changeover switch (switching to RIGHT) signal is displayed.
MIR CHNG SW–L	"ON/ OFF"	ON/OFF status judged from the changeover switch (switching to LEFT) signal is displayed.

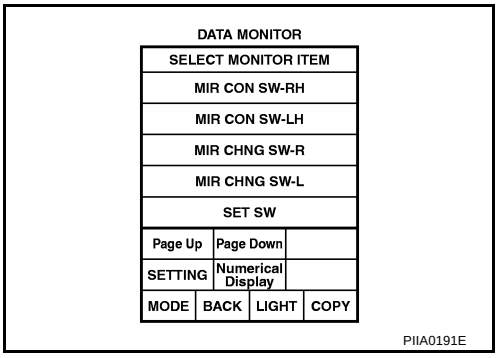

Without CONSULT-II

1. Turn ignition switch ON.
2. Check voltage between automatic drive positioner control unit connector and ground.

Terminals (+) Automatic drive positioner control unit connector	Terminals (+) Terminal	Terminals (-)	Change over switch condition	Voltage (V) (Approx.)
M6	2	Ground	RIGHT	0
			Other than above	5
	18		LEFT	0
			Other than above	5

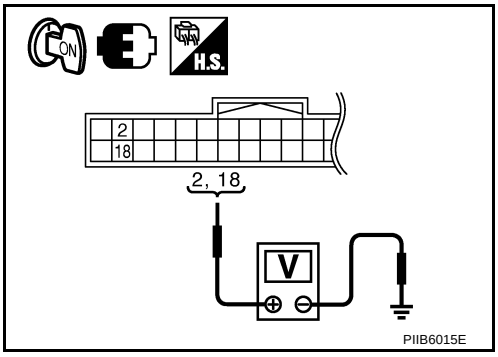

OK or NG

OK >> Changeover switch circuit is OK.
NG >> GO TO 2.

2. CHECK HARNESS CONTINUITY

1. Turn ignition switch OFF.
2. Disconnect automatic drive positioner control unit and door mirror remote control switch connector.
3. Check continuity between automatic drive positioner control unit connector and door mirror remote control switch connector.

A		B		Continuity
Automatic drive positioner control unit connector	Terminal	Door mirror remote control switch connector	Terminal	
M6	2	M95	3	Yes
	18		2	

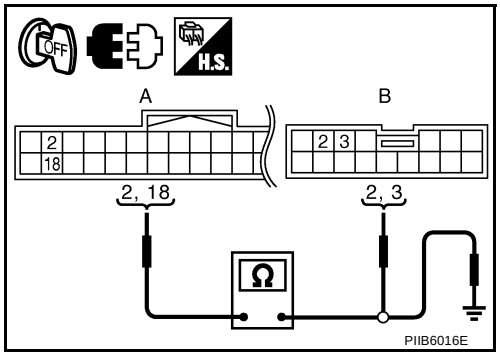

4. Check continuity between automatic drive positioner control unit connector and ground.

A		Ground	Continuity
Automatic drive positioner control unit connector	Terminal		
M6	2		No
	18		

OK or NG

OK >> GO TO 3.
NG >> Repair or replace harness.

3. CHECK CANGEOVER SWITCH

Check door mirror remote control switch.

Terminal		Change over switch condition	Continuity
Door mirror remote control switch			
2	13	LEFT	Yes
		Other than above	No
3		RIGHT	Yes
		Other than above	No

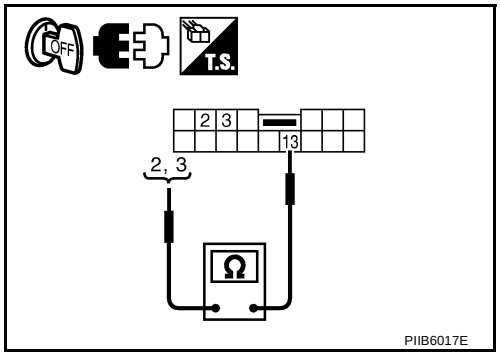

OK or NG

OK >> GO TO 4.
NG >> Replace door mirror remote control switch.

4. CHECK DOOR MIRROR REMOTE CONTROL SWITCH GROUND CIRCUIT

Check continuity between door mirror remote control switch connector and ground.

Door mirror remote control switch connector	Terminal	Ground	Continuity
M95	13		Yes

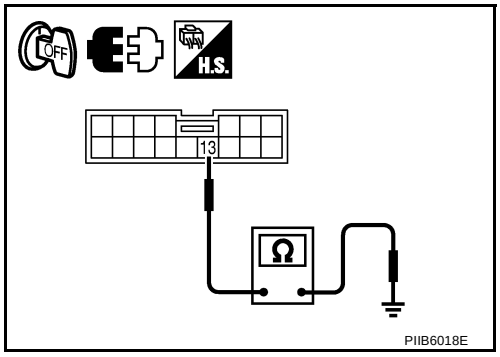

OK or NG

OK >> GO TO 5.
NG >> Repair or replace harness.

5. CHECK AUTOMATIC DRIVE POSITIONER CONTROL UNIT OUTPUT SIGNAL

1. Connect automatic drive positioner control unit connector.
2. Turn ignition switch ON.
3. Check voltage between automatic drive positioner control unit connector and ground.

Terminals			Voltage (V) (Approx.)
(+)		(-)	
Automatic drive positioner control unit connector	Terminal		
M6	2	Ground	5
	18		

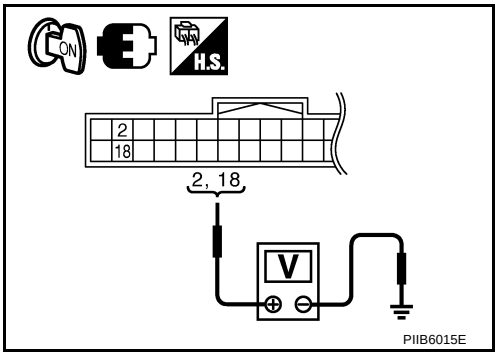

OK or NG

OK >> Check the condition of harness and connector.
NG >> Replace automatic drive positioner control unit.

Check Mirror Switch Circuit

NIS0023C

1. CHECK MIRROR SWITCH SIGNAL

With CONSULT-II

Check the operation on “(MIR CON SW–UP/DN) and (MIR CON SW–RH/LH) in the DATA MONITOR.

Monitor item [OPERATION or UNIT]		Contents
MIR CON SW–UP	“ON/ OFF”	ON/OFF status judged from the mirror switch (UP) signal is displayed.
MIR CON SW–DN	“ON/ OFF”	ON/OFF status judged from the mirror switch (DOWN) signal is displayed.
MIR CON SW–RH	“ON/ OFF”	ON/OFF status judged from the mirror switch (RIGHT) signal is displayed.
MIR CON SW–LH	“ON/ OFF”	ON/OFF status judged from the mirror switch (LEFT) signal s displayed.

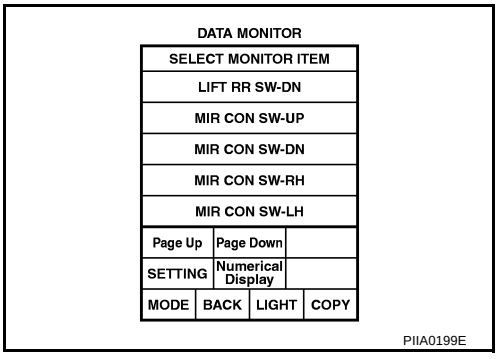

Without CONSULT-II

1. Turn ignition switch to ON position.
2. Check voltage between automatic drive positioner control unit connector and ground.

Terminals			Mirror switch Condition	Voltage (V) (Approx.)
(+)		(–)		
Automatic drive positioner control unit connector	Terminal			
M6	3	Ground	UP	0
			Other than above	5
	4		LEFT	0
			Other than above	5
	19		DOWN	0
			Other than above	5
	20		RIGHT	0
			Other than above	5

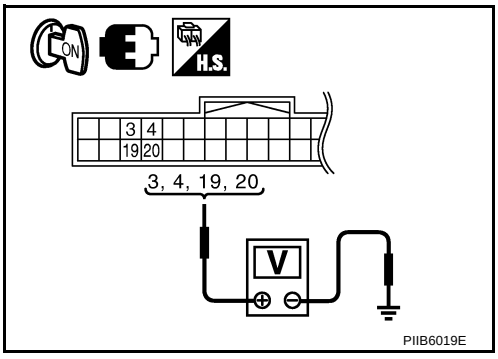

OK or NG

OK >> Mirror switch circuit is OK.
NG >> GO TO 2.

2. CHECK HARNESS CONTINUITY

1. Turn ignition switch OFF.
2. Disconnect automatic drive positioner control unit and door mirror remote control switch connector.
3. Check continuity between automatic drive positioner control unit connector and door mirror remote control switch connector.

A		B		Continuity
Automatic drive positioner control unit connector	Terminal	Door mirror remote control switch connector	Terminal	
M6	3	M95	6	Yes
	4		5	
	19		14	
	20		4	

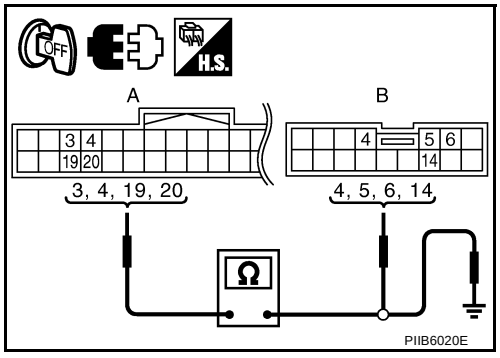

4. Check continuity between automatic drive positioner control unit connector and ground.

A			Continuity
Automatic drive positioner control unit connector	Terminal	Ground	
M6	3		No
	4		
	19		
	20		

OK or NG

OK >> GO TO 3.
NG >> Repair or replace harness.

3. CHECK DOOR MIRROR SWITCH

Check door mirror remote control switch.

Terminal		Mirror switch condition	Continuity
Door mirror remote control switch			
4	13	RIGHT	Yes
		Other than above	No
5		LEFT	Yes
		Other than above	No
6		UP	Yes
		Other than above	No
14		DOWN	Yes
		Other than above	No

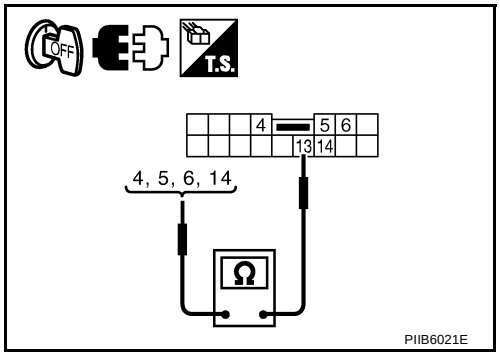

OK or NG

OK >> GO TO 4.
NG >> Replace door mirror remote control switch.

4. CHECK AUTOMATIC DRIVE POSITIONER CONTROL UNIT OUTPUT SIGNAL

1. Connect automatic drive positioner control unit connector.
2. Turn ignition switch ON.
3. Check voltage between automatic drive positioner control unit and ground.

Terminals			Voltage (V) (Approx.)
(+)		(-)	
Automatic drive positioner control unit connector	Terminal		
M6	3	Ground	5
	4		
	19		
	20		

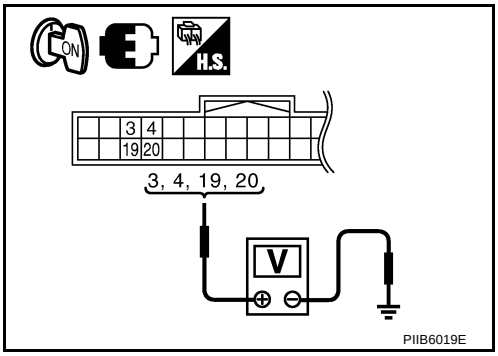

OK or NG

OK >> Check the condition of harness and connector.
NG >> Replace automatic drive positioner control unit.

Check Mirror Motor Circuit

NIS0023D

1. CHECK MIRROR MOTOR FUNCTION

With CONSULT-II

Check the operation with (MIRROR MOTOR RH, MIRROR MOTOR LH) in the ACTIVE TEST.

Test item	Description
MIRROR MOTOR LH	The LH mirror motor moves the mirror UP/DOWN and LEFT/RIGHT by receiving the drive signal.
MIRROR MOTOR RH	The RH mirror motor moves the mirror UP/DOWN and LEFT/RIGHT by receiving the drive signal.

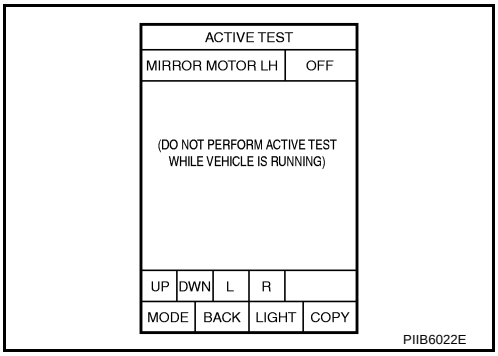

Without CONSULT-II

1. Turn ignition switch to ON position.
2. Check voltage between door mirror connector and ground.

Terminals			Mirror switch Condition	Voltage (V) (Approx.)
(+)		(–)		
Door mirror connector	Terminal			
D2 (RH) D39 (LH)	5	Ground	UP	Battery voltage
			Other than above	0
	6		LEFT	Battery voltage
			Other than above	0
	7		DOWN / RIGHT	Battery voltage
			Other than above	0

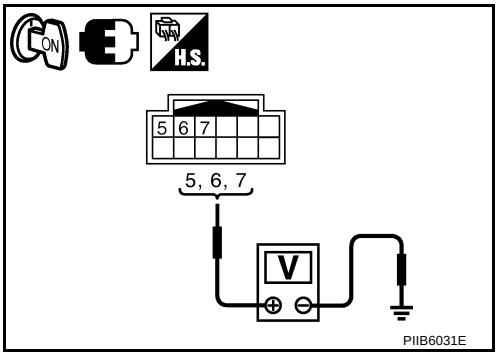

OK or NG

OK >> Mirror motor circuit is OK.
NG >> GO TO 2.

2. CHECK HARNESS CONTINUITY

1. Turn ignition switch OFF.
2. Disconnect automatic drive positioner control unit connector and door mirror connector.
3. [Door mirror LH]

– Check continuity between automatic drive positioner control unit connector and door mirror LH connector.

A		B		Continuity
Automatic drive positioner control unit connector	Terminal	Door mirror LH connector	Terminal	
M6	16	D2	7	Yes
	31		5	
	32		6	

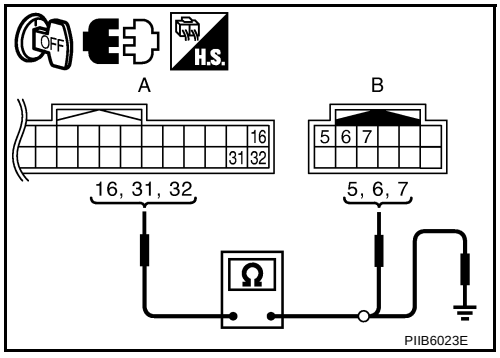

– Check continuity between automatic drive positioner control unit connector and ground.

A		Ground	Continuity
Automatic drive positioner control unit connector	Terminal		
M6	16		No
	31		
	32		

4. [Door mirror RH]

– Check continuity between automatic drive positioner control unit connector and door mirror RH connector.

A		B		Continuity
Automatic drive positioner control unit connector	Terminal	Door mirror RH connector	Terminal	
M6	14	D39	5	Yes
	15		6	
	30		7	

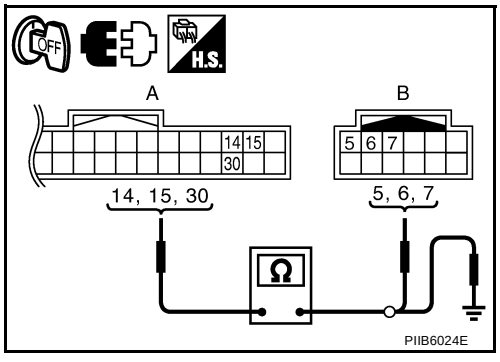

– Check continuity between automatic drive positioner control unit connector and ground.

A		Ground	Continuity
Automatic drive positioner control unit connector	Terminal		
M6	14		No
	15		
	30		

OK or NG

OK >> GO TO 3.
NG >> Repair or replace harness.

3. CHECK AUTOMATIC DRIVE POSITIONER CONTROL UNIT OUTPUT SIGNAL

1. Connect automatic drive positioner control unit connector.
2. Turn ignition switch ON.
3. [Door mirror LH]
   Check voltage between automatic drive positioner control unit connector and ground.

Terminals			Mirror switch condition	Voltage (V) (Approx.)
(+)		(-)		
Automatic drive positioner control unit connector	Terminal			
M6	16	Ground	DOWN / RIGHT	Battery voltage
			Other than above	0
	31		UP	Battery voltage
			Other than above	0
	32		LEFT	Battery voltage
			Other than above	0

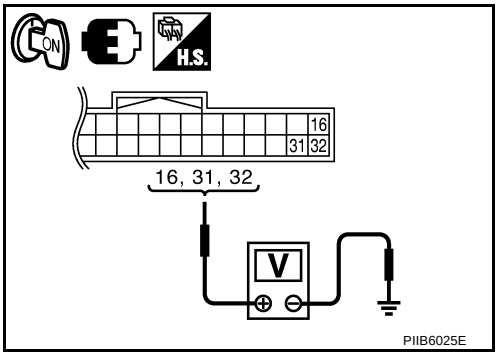

4. [Door mirror RH]
   Check voltage between automatic drive positioner control unit connector and ground.

Terminals			Mirror switch condition	Voltage (V) (Approx.)
(+)		(-)		
Automatic drive positioner control unit connector	Terminal			
M6	14	Ground	UP	Battery voltage
			Other than above	0
	15		LEFT	Battery voltage
			Other than above	0
	30		DOWN / RIGHT	Battery voltage
			Other than above	0

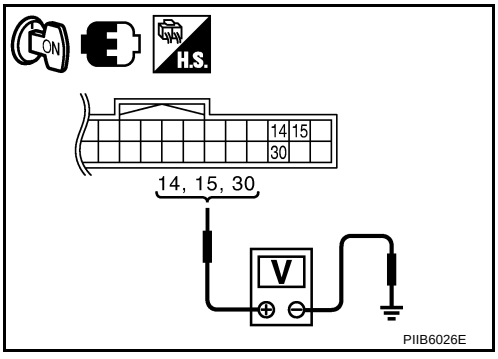

OK or NG

OK >> Replace malfunction door mirror actuator.
NG >> Replace automatic drive positioner control unit.

Check Mirror Sensor Circuit

NIS0023E

1. CHECK MIRROR SENSOR INSPECTION

With CONSULT-II

Check the voltage on (MIR/SE LH R–L, MIR/SE LH U–D, MIR/SE RH R–L, MIR/SE RH U–D) in the DATA MONITOR.

Monitor item [OPERATION or UNIT]		Contents
MIR/SE LH R–L	"V"	Voltage output from door mirror LH horizontal sensor (LH/RH) is displayed.
MIR/SE LH U–D	"V"	Voltage output from door mirror LH vertical sensor (UP/DOWN) is displayed.
MIR/SE RH R–L	"V"	Voltage output from door mirror RH horizontal sensor (LH/RH) is displayed.
MIR/SE RH U–D	"V"	Voltage output from door mirror RH vertical sensor (UP/DOWN) is displayed.

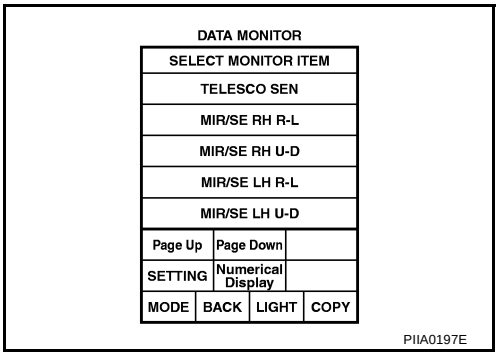

Without CONSULT-II

1. Turn ignition switch ON.
2. Check voltage between automatic drive positioner control unit connector and ground.

Terminals (+) Automatic drive positioner control unit connector		Terminal	Terminals (-)	Mirror face position	Voltage (V) (Approx.)
M6	Door mirror RH side	5	Ground	Close to perk	4.2
				Close to valley	0.5
		21		Close to left edge	3.5
				Close to right edge	0.5
	Door mirror LH side	6		Close to perk	4.2
				Close to valley	0.5
		22		Close to left edge	0.5
				Close to right edge	3.5

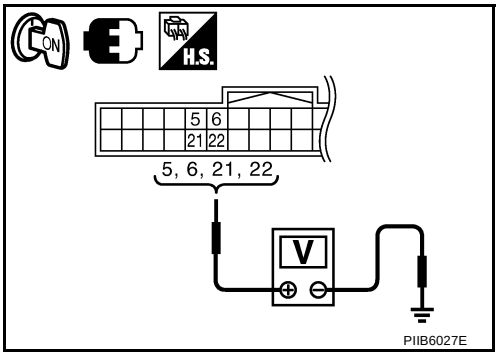

OK or NG

OK >> Mirror sensor LH circuit is OK.
NG >> GO TO 3.

2. CHECK MIRROR SENSOR POWER SUPPLY 1

Check voltage between door mirror connector and ground.

Terminals (+) Door mirror connector	Terminal	Terminals (-)	Voltage (V) (Approx.)
D2 (LH) D39 (RH)	11	Ground	Battery voltage

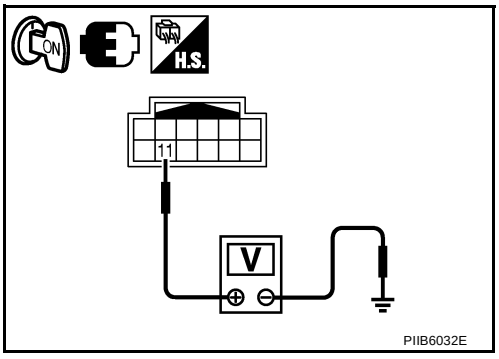

OK or NG

OK >> GO TO 5.
NG >> GO TO 3.

3. CHECK MIRROR SENSOR POWER SUPPLY 2

1. Turn ignition switch OFF.
2. Disconnect door mirror connector.
3. Turn ignition switch ON.
4. Check voltage between automatic drive positioner control unit connector and ground.

Terminals			Voltage (V) (Approx.)
(+)		(-)	
Automatic drive positioner control unit connector	Terminal		
M7	33	Ground	Battery voltage

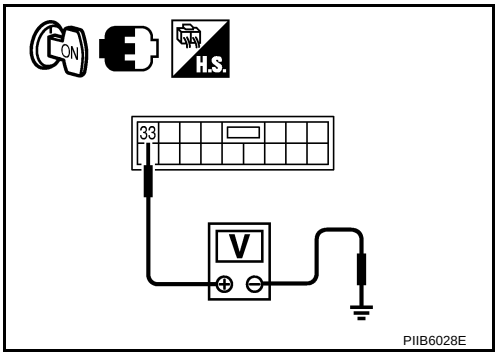

OK or NG

OK >> GO TO 4.
NG >> Replace automatic drive positioner control unit.

4. CHECK HARNESS CONTINUITY 1

1. Turn ignition switch OFF.
2. Disconnect automatic drive positioner control unit connector.
3. Check continuity between automatic drive positioner control unit connector and door mirror connector.

A		B		Continuity
Automatic drive positioner control unit connector	Terminal	Door mirror connector	Terminal	
M7	33	D2 (LH) D39 (RH)	11	Yes

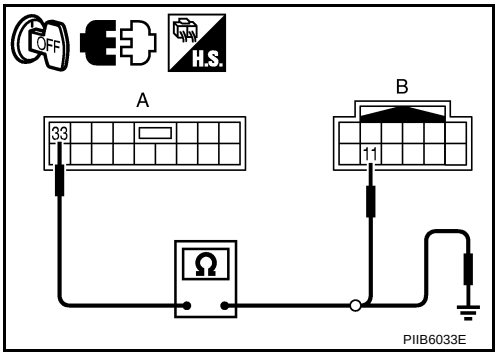

4. Check continuity between automatic drive positioner control unit connector and ground.

A		Ground	Continuity
Automatic drive positioner control unit connector	Terminal		
M7	33		No

OK or NG

OK >> Check the condition of harness and connector.
NG >> Repair or replace harness.

5. CHECK MIRROR SENSOR GROUND 1

1. Turn ignition switch OFF.
2. Disconnect door mirror connector.
3. Check continuity between door mirror connector and ground.

Door mirror connector	Terminal	Ground	Continuity
D2 (LH) D39 (RH)	12		Yes

OK or NG

OK >> GO TO 8.
NG >> GO TO 6.

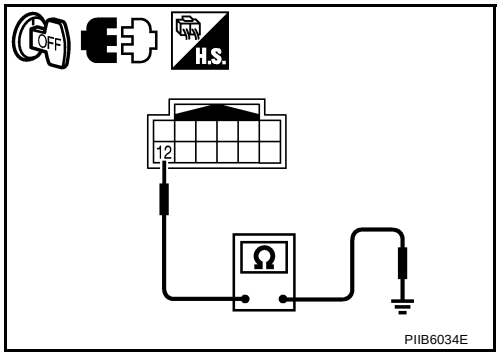

6. CHECK MIRROR SENSOR GROUND 2

Check continuity between automatic drive positioner control unit connector and ground.

Automatic drive positioner control unit connector	Terminal	Ground	Continuity
M7	41		Yes

OK or NG

OK >> GO TO 7.
NG >> Replace auto drive positioner control unit.

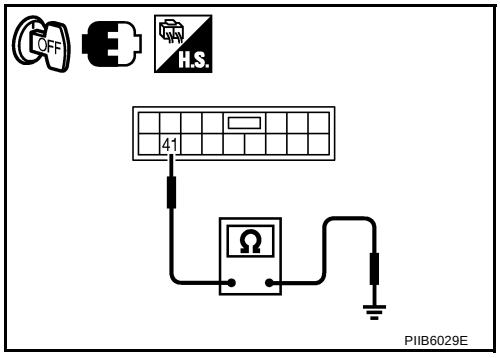

7. CHECK HARNESS CONTINUITY 2

1. Disconnect automatic drive positioner control unit connector.
2. Check continuity between automatic drive positioner control unit connector and door mirror connector.

A		B		Continuity
Automatic drive positioner control unit connector	Terminal	Door mirror connector	Terminal	
M7	41	D2 (LH) D39 (RH)	12	Yes

3. Check continuity between automatic drive positioner control unit connector and door mirror connector.

A		Ground	Continuity
Automatic drive positioner control unit connector	Terminal		
M7	41		Yes

OK or NG

OK >> Check the condition of the harness and connector.
NG >> Repair or replace harness between automatic drive positioner control unit and door mirror.

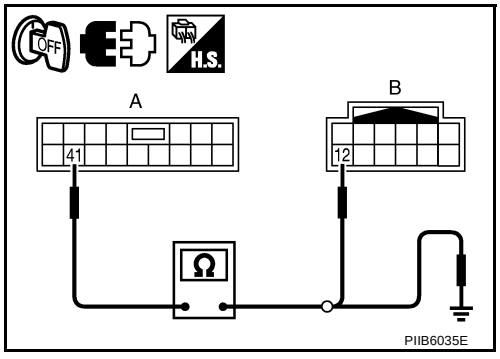

8. CHECK HARNESS CONTINUITY 3

1. Disconnect automatic drive positioner control unit connector and door mirror connector.
2. [Door mirror LH]

– Check continuity between automatic drive positioner control unit connector and door mirror LH connector.

A		B		Continuity
Automatic drive positioner control unit connector	Terminal	Door mirror LH connector	Terminal	
M6	6	D2	9	Yes
	22		10	

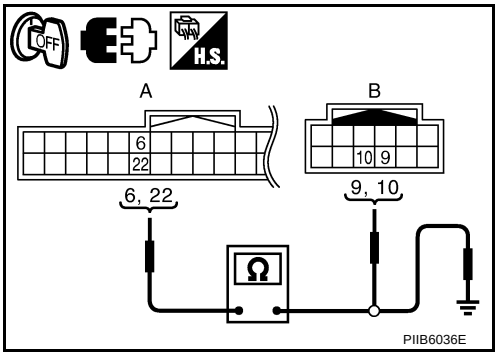

– Check continuity between automatic drive positioner control unit connector and ground.

A		Ground	Continuity
Automatic drive positioner control unit connector	Terminal		
M6	6		No
	22		

3. [Door mirror RH]

– Check continuity between automatic drive positioner control unit connector and door mirror RH connector.

A		B		Continuity
Automatic drive positioner control unit connector	Terminal	Door mirror RH connector	Terminal	
M6	5	D39	9	Yes
	21		10	

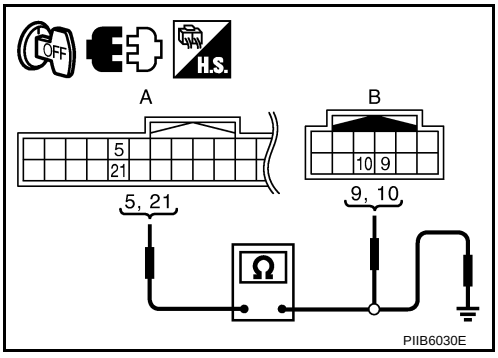

– Check continuity between automatic drive positioner control unit connector and ground.

A		Ground	Continuity
Automatic drive positioner control unit connector	Terminal		
M6	5		No
	21		

OK or NG

OK >> Check the condition of harness and connector.
NG >> Repair or replace harness between automatic drive positioner control unit and door mirror connector.

Check A/T Control Device R Position Circuit

NIS0023F

1. CHECK R POSITION SIGNAL

Refer to AT-186, "A/T INDICATOR CIRCUIT"

OK or NG

OK >> Refer to SE-37, "SELF-DIAGNOSIS RESULTS"
NG >> Refer to AT-186, "A/T INDICATOR CIRCUIT"

DOOR MIRROR

PFP:96301

Automatic Drive Positioner Interlocking Door Mirror

NIS0023G

Automatic drive positioner interlocking door mirror. Refer to SE-11, "AUTOMATIC DRIVE POSITIONER" .

Removal and Installation

NIS0023H

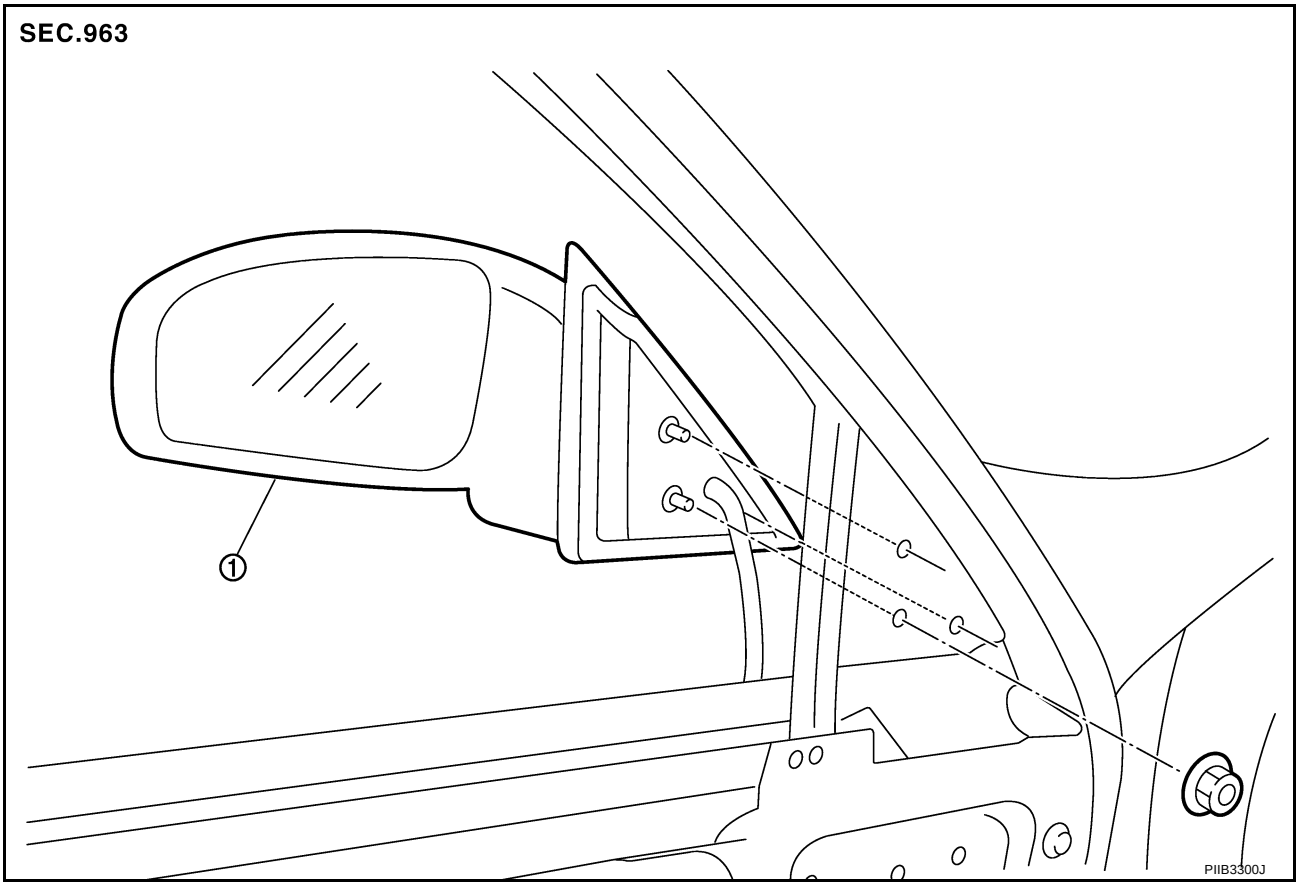

1. Door mirror assembly

CAUTION:
Be careful not to damage the mirror bodies.

REMOVAL

1. Remove the front door finisher. Refer to EI-34, "DOOR FINISHER" .
2. Remove the front door sash cover inner. Refer to EI-36, "FRONT DOOR SASH COVER INNER" .
3. Remove the door mirror harness connector.
4. Remove the door mirror mounting nuts, and remove the door mirror assembly.

INSTALLATION

Install in the reverse order of removal.

Disassembly and Assembly

NIS0023I

SEC. 963

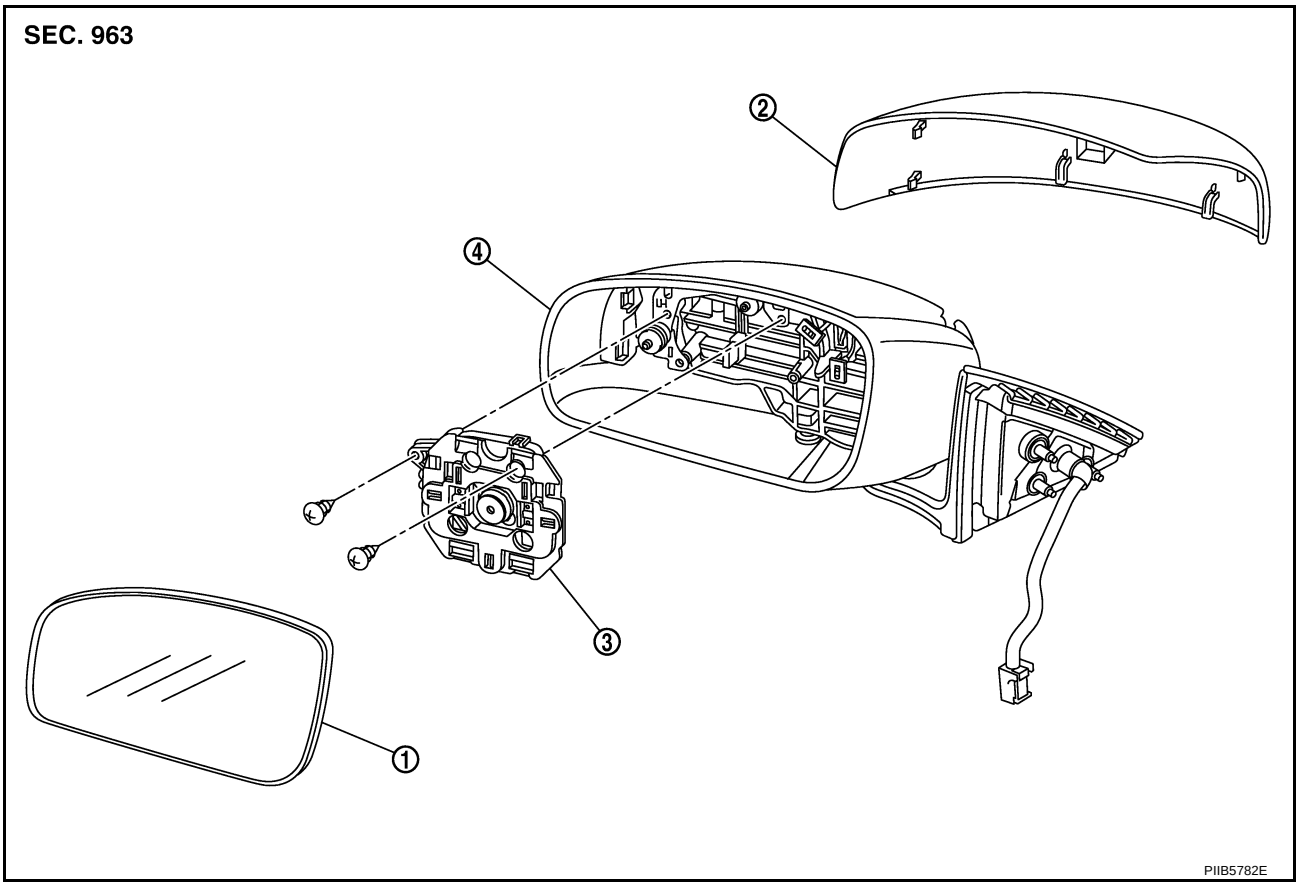

1. Mirror housing
2. Mirror cover
3. Power unit
4. Mirror (mirror holder)

DISASSEMBLY

1. Place the mirror body with mirror glass facing upward.
2. Put a strip of protective tape B on mirror body.
3. As shown in the figure, insert a small slotted screwdriver A into the recess between mirror base (mirror holder)(1) and mirror holder bracket (2) and push up two pawls (3) to remove mirror holder lower half side.

   NOTE:
   When pushing up pawls do not attempt to use one recess only, be sure to push up with both recesses.
   Insert screwdriver into recesses, and push up while rotating (twist) to make work easier.

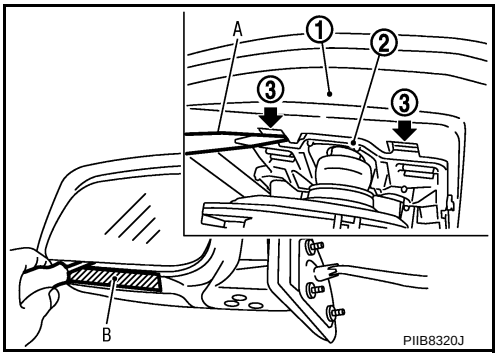

4. Remove two terminals of mirror heater attachment.
5. Lightly lift up lower side of mirror surface from mirror surface, and detach two pawls of upper side as if pulling it out. Remove mirror surface from mirror body.

   NOTE:
   Be certain not to allow grease on sealing agent in center of mirror body assembly (actuator) or back side of mirror surface (mirror holder).

6. Remove the clips and mirror cover from the housing.

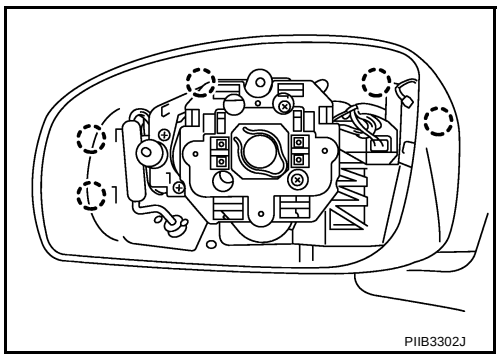

7. Remove the screws and power unit from the housing.

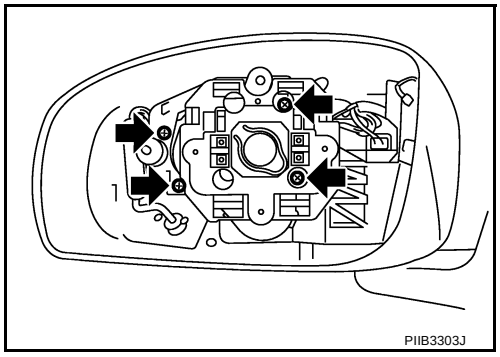

ASSEMBLY

1. Install the power unit.
2. Install the mirror cover.
3. Place mirror holder bracket and mirror body assembly (actuator) in a horizontal position.
4. Connect two terminals of heater installed mirror.
5. Fit the upper two pawls on the mirror face (1) onto the mirror holder bracket (2) first, then press the lower side of mirror face until a click sound is heard to engage the lower pawls.

   NOTE:
   After installation, visually make sure lower two pawls are securely engaged from the bottom of mirror face.