SECTION WW

WIPER, WASHER & HORN

CONTENTS

PRECAUTION

PFP:00011

Precautions for Supplemental Restraint System (SRS) “AIR BAG” and “SEAT BELT PRE-TENSIONER”

NKS000LR

The Supplemental Restraint System such as “AIR BAG” and “SEAT BELT PRE-TENSIONER”, used along with a front seat belt, helps to reduce the risk or severity of injury to the driver and front passenger for certain types of collision. This system includes seat belt switch inputs and dual stage front air bag modules. The SRS system uses the seat belt switches to determine the front air bag deployment, and may only deploy one front air bag, depending on the severity of a collision and whether the front occupants are belted or unbelted.
Information necessary to service the system safely is included in the SRS and SB section of this Service Manual.

WARNING:

- **To avoid rendering the SRS inoperative, which could increase the risk of personal injury or death in the event of a collision which would result in air bag inflation, all maintenance must be performed by an authorized NISSAN/INFINITI dealer.**
- **Improper maintenance, including incorrect removal and installation of the SRS, can lead to personal injury caused by unintentional activation of the system. For removal of Spiral Cable and Air Bag Module, see the SRS section.**
- **Do not use electrical test equipment on any circuit related to the SRS unless instructed to in this Service Manual. SRS wiring harnesses can be identified by yellow and/or orange harnesses or harness connectors.**

Precautions for Battery Service

NKS000LS

Before disconnecting the battery, lower both the driver and passenger windows. This will prevent any interference between the window edge and the vehicle when the door is opened/closed. During normal operation, the window slightly raises and lowers automatically to prevent any window to vehicle interference. The automatic window function will not work with the battery disconnected.

FRONT WIPER AND WASHER SYSTEM

PFP:28810

Components Parts and Harness Connector Location

NKS000LU

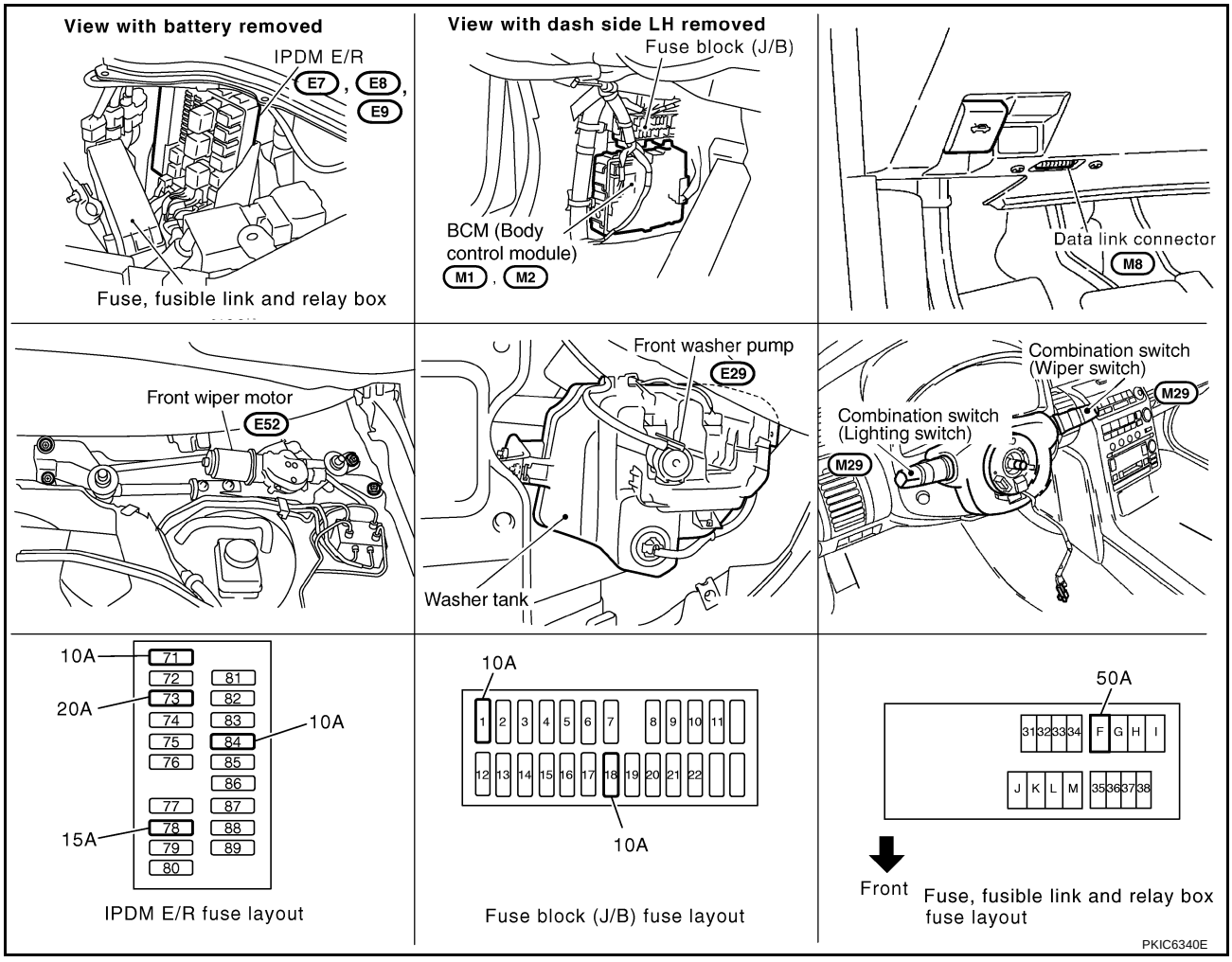

System Description

NKS000LV

- All front wiper relays (HI, LO) are included in IPDM E/R (intelligent power distribution module engine room).
- Wiper switch (combination switch) is composed of a combination of 5 output terminals and 5 input terminals. Terminal combination status is read by BCM (body control module) when switch is turned ON.
- BCM controls front wiper LO, HI, and INT (intermittent) operation.
- IPDM E/R operates wiper motor according to CAN communication signals from BCM.

OUT LINE

Power is supplied at all times

- to ignition relay located in IPDM E/R, from battery direct,
- through 50 A fusible link (letter F, located in fuse, fusible link and relay box)
- to BCM terminal 55,
- through 10 A fuse [No.18 located in fuse block (J/B)]
- to BCM terminal 42,
- through 20 A fuse (No.73 located in IPDM E/R)
- to front wiper relay located in IPDM E/R,
- through 15 A fuse (No.78 located in IPDM E/R)
- to CPU located in IPDM E/R,
- through 10 A fuse (No.71 located in IPDM E/R)
- to CPU located in IPDM E/R.

With the ignition switch in the ON or START position, power is supplied

- through ignition relay located in IPDM E/R
- to front wiper relay located in IPDM E/R
- to front wiper high relay located in IPDM E/R and
- to CPU located in IPDM E/R,
- through 10 A fuse [No.1 located in fuse block (J/B)]
- to BCM terminal 38,
- through 10 A fuse (No.84 located in IPDM E/R)
- through IPDM E/R terminal 44
- to front washer motor terminal 2.

Ground is supplied

- to BCM terminal 52 and
- to combination switch terminal 12
- through grounds M30 and M66,
- to IPDM E/R terminals 38 and 60
- through grounds E17 and E43.

LOW SPEED WIPER OPERATION

When the front wiper switch is in LOW position, BCM detect low speed wiper ON signal by BCM wiper switch reading function.
BCM sent front wiper request signal (LOW) with CAN communication line

- from BCM terminals 39 and 40
- to IPDM E/R terminals 48 and 49.

When the IPDM E/R receives front wiper request signal (LOW), it turns ON front wiper relay, located in the IPDM E/R, power is supplied

- through IPDM E/R terminal 21 and front wiper high relay and front wiper relay
- to front wiper motor terminal 3.

Ground is supplied

- to front wiper motor terminal 2
- through grounds E17 and E43.

with power and ground is supplied, front wiper motor operates at low speed.

HIGH SPEED WIPER OPERATION

When the front wiper switch is in HI position, BCM detect high speed wiper ON signal by BCM wiper switch reading function.
BCM sent front wiper request signal (HI) with CAN communication line

- from BCM terminals 39 and 40
- to IPDM E/R terminals 48 and 49.

When the IPDM E/R receives front wiper request signal (HI), it turns ON front wiper relay, located in IPDM E/R, power is supplied

- through IPDM E/R terminal 31 and front wiper high relay and front wiper relay
- to front wiper motor terminal 5.

Ground is supplied

- to front wiper motor terminal 2
- through grounds E17 and E43.

with power and ground is supplied, front wiper motor operates at high speed.

INTERMITTENT OPERATION

Front wiper intermittent operation delay interval is determined from a combination of 3 switches (intermittent operation INT VOLUME 1, 2, and 3) and vehicle speed signal.
After each intermittent operation delay interval, BCM sends front wiper request signal to IPDM E/R.

Wiper Intermittent Dial Position Setting

Wiper dial position	Intermittent operation interval	Combination switch		
		Intermittent operation dial position 1	Intermittent operation dial position 2	Intermittent operation dial position 3
1	Short	ON	ON	ON
2		ON	ON	OFF
3		ON	OFF	OFF
4	↑ ↓	OFF	OFF	OFF
5		OFF	OFF	ON
6		OFF	ON	ON
7	Long	OFF	ON	OFF

Example: For wiper intermittent dial position 1
Using combination switch reading function, BCM detects ON/OFF status of intermittent operation INT VOLUME 1, 2, and 3.
When combination switch status is as listed below, BCM determines that it is wiper Intermittent dial position 1.

- Intermittent operation INT VOLUME 1: ON (Continuity exists between combination switch output 3 and input 1.)
- Intermittent operation INT VOLUME 2: ON (Continuity exists between combination switch output 5 and input 1.)
- Intermittent operation INT VOLUME 3: ON (Continuity exists between combination switch output 4 and input 2.)

BCM determines front wiper intermittent operation delay interval from wiper Intermittent dial position and vehicle speed, and sends wiper request signal (INT) to IPDM E/R.

AUTO STOP OPERATION

With wiper switch turned OFF, wiper motor will continue to operate until wiper arms reach windshield base.
When the wiper arms are not located at base of windshield with wiper switch OFF, ground is provided

- from IPDM E/R terminal 21
- to front wiper motor terminal 3, in order to continue wiper motor operation at low speed,
- to IPDM E/R terminal 32
- through front wiper motor terminals 4 and 2
- through grounds E17 and E43.

When the wiper arms reach base of windshield, front wiper motor terminals 4 and 2 are connected, and ground is supplied
Then the IPDM E/R sends auto stop operation signal to BCM with CAN communication line.
When the BCM receives auto-stop operation signal, BCM sends wiper stop signal to IPDM E/R with CAN communication line.
IPDM E/R stops wiper motor. Wiper motor will then stop wiper arms at the STOP position.

WASHER OPERATION

When the wiper switch is in front wiper washer position, BCM detect front wiper washer signal by BCM wiper switch reading function. (Refer to WW-7, "COMBINATION SWITCH READING FUNCTION")
Combination switch ground is supplied

- to front washer pump terminal 1
- through combination switch terminal 11
- through combination switch terminal 12
- through grounds M30 and M66.

With ground is supplied, front washer pump is operated.
When the BCM detects that front washer pump has operated for 0.4 seconds or longer, BCM operates front wiper motor for low speed.
When the BCM detects washer switch is OFF, low speed operation cycles approximately 3 times and stops.

MIST OPERATION

When the wiper switch is turned to the mist position, wiper low speed operation cycles once and then stops.

For additional information about wiper operation under this condition, refer to WW-5, "LOW SPEED WIPER OPERATION" .
If switch is held in mist position, low speed operation continues.

FAIL-SAFE FUNCTION

If an abnormality occurs in CAN communications, IPDM E/R holds the condition just before fail-safe status is initiated until ignition switch is turned OFF. (If wipers were operating in LO just before the initiation of fail-safe status, they continue to operate in LO until ignition switch is turned OFF.)

COMBINATION SWITCH READING FUNCTION

Description

- BCM reads combination switch (wiper) status, and controls related systems such as headlamps and wipers, according to the results.
- BCM reads information of a maximum of 20 switches by combining five output terminals (OUTPUT 1-5) and five input terminals (INPUT 1-5).

Operation Description

- BCM activates transistors of output terminals (OUTPUT 1-5) periodically, and allows current to flow in turn.
- If any (1 or more) switches are turned ON, circuit of output terminals (OUTPUT 1-5) and input terminals (INPUT 1-5) becomes active.
- At this time, transistors of output terminals (OUTPUT 1-5) are activated to allow current to flow. When voltage of input terminals (INPUT 1-5) corresponding to that switch changes, interface in BCM detects voltage change, and BCM determines that switch is ON.

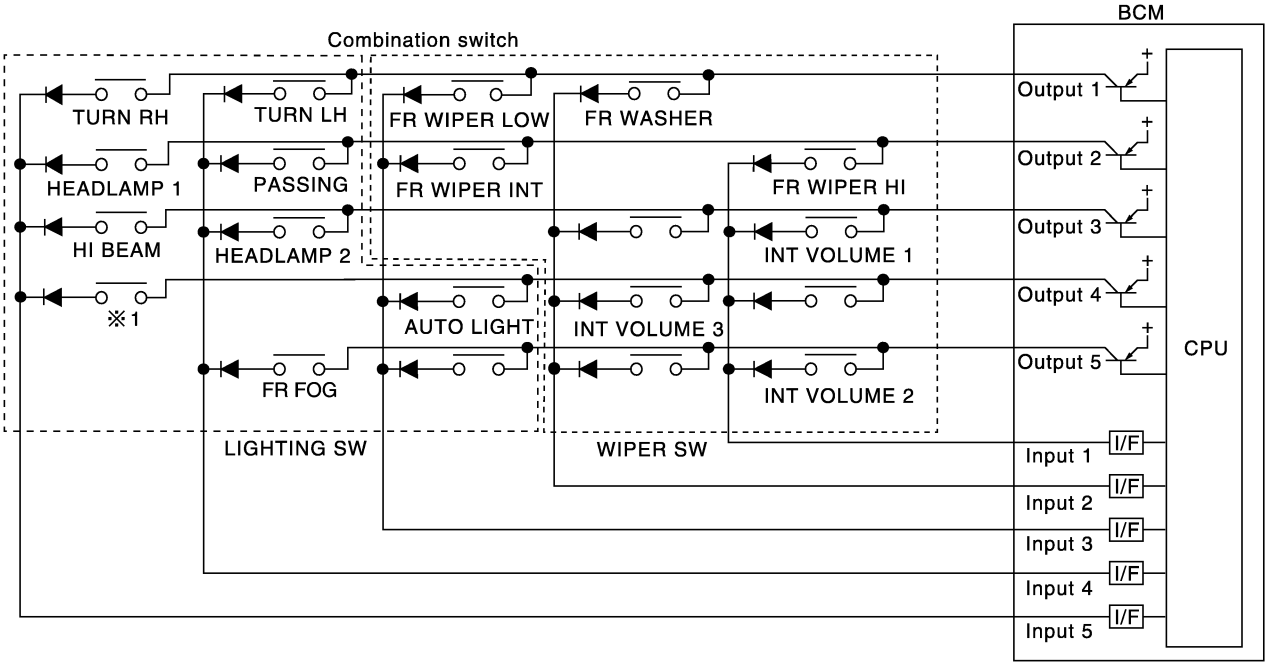

※1 : LIGHTING SWITCH 1ST POSITION

PKIC6010E

BCM - Operation Table of Combination Switches

- BCM reads operation status of combination switch using combinations shown in table below.

	COMB SW OUTPUT 1		COMB SW OUTPUT 2		COMB SW OUTPUT 3		COMB SW OUTPUT 4		COMB SW OUTPUT 5	
	ON	OFF	ON	OFF	ON	OFF	ON	OFF	ON	OFF
COMB SW INPUT 1	–	–	FR WIPER HI ON	FR WIPER HI OFF	INT VOLUME 1 ON	INT VOLUME 1 OFF	–	–	INT VOLUME 2 ON	INT VOLUME 2 OFF
COMB SW INPUT 2	FR WASHER ON	FR WASHER OFF	–	–	–	–	INT VOLUME 3 ON	INT VOLUME 3 OFF	–	–
COMB SW INPUT 3	FR WIPER LOW ON	FR WIPER LOW OFF	FR WIPER INT ON	FR WIPER INT OFF	–	–	AUTO LIGHT ON	AUTO LIGHT OFF	–	–
COMB SW INPUT 4	TURN LH ON	TURN LH OFF	PASSING ON	PASSING OFF	HEAD-LAMP 2 ON	HEAD-LAMP 2 OFF	–	–	FR FOG ON	FR FOG OFF
COMB SW INPUT 5	TURN RH ON	TURN RH OFF	HEAD-LAMP 1 ON	HEAD-LAMP 1 OFF	HI BEAM ON	HI BEAM OFF	LIGHTING SW (1st) ON	LIGHTING SW (1st) OFF	–	–

SKIA8640E

Sample Operation: (When Wiper Switch Turned to LOW Position)

- When wiper switch is turned to LOW position, front wiper LOW contact in combination switch turns ON. At this time if OUTPUT 1 transistor is activated, BCM detects that voltage changes in INPUT 3.
- When BCM detects that voltage changes in INPUT 3 while OUTPUT 1 transistor is ON, it judges that front wiper switch is in LOW position. Then BCM sends front wiper request signal (LO) to IPDM E/R using CAN communication.
- If BCM detects that voltage changes in INPUT 3 when OUTPUT 1 transistor is activated again, it recognizes that wiper switch is still in LOW position.

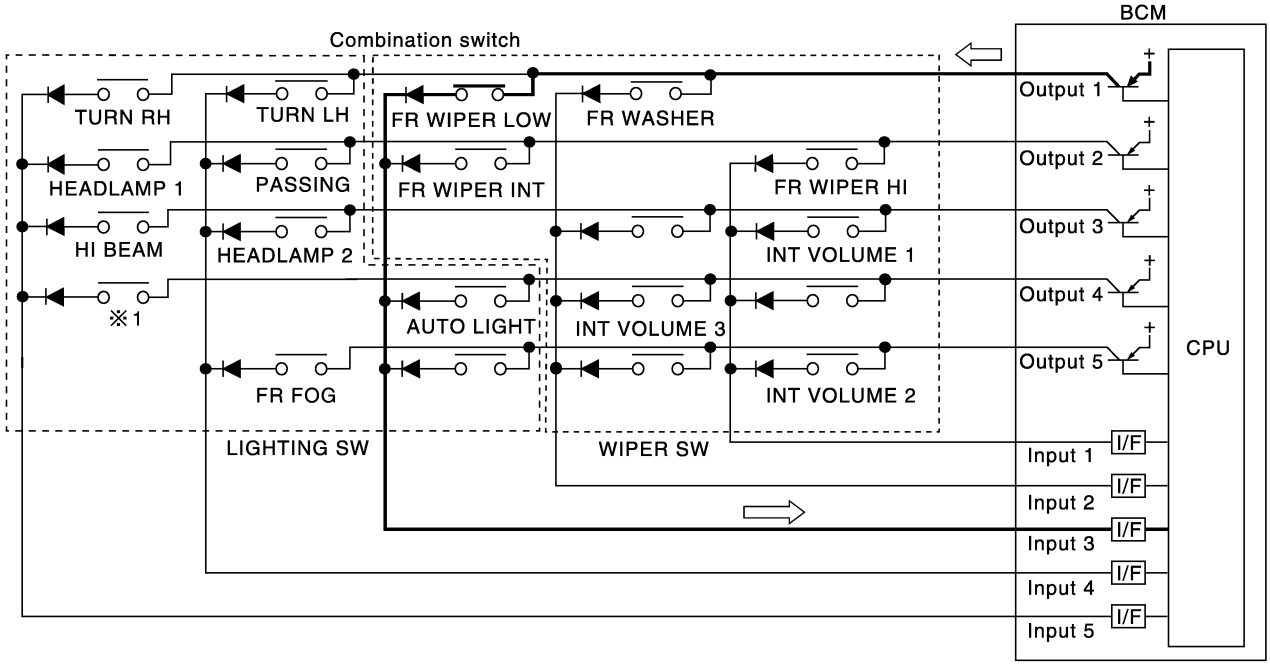

※1 : LIGHTING SWITCH 1ST POSITION

PKIC6011E

NOTE:
Each OUTPUT terminal transistor is activated at 10 ms intervals. Therefore after switch is turned ON, electrical loads are activated with time delay. But this time delay is so short that it cannot be detected by human senses.

Operation Mode

Combination switch reading function has operation modes shown below.

1. Normal status
   - When BCM is not in sleep status, OUTPUT terminals (1-5) each turn ON-OFF every 10 ms.
2. Sleep status
   - When BCM is in sleep status, transistors of OUTPUT (1 and 5) stop the output, and BCM enters low current consumption mode. OUTPUT (2, 3, and 4) turn ON-OFF every 60 ms, and only input from light switch system is accepted.

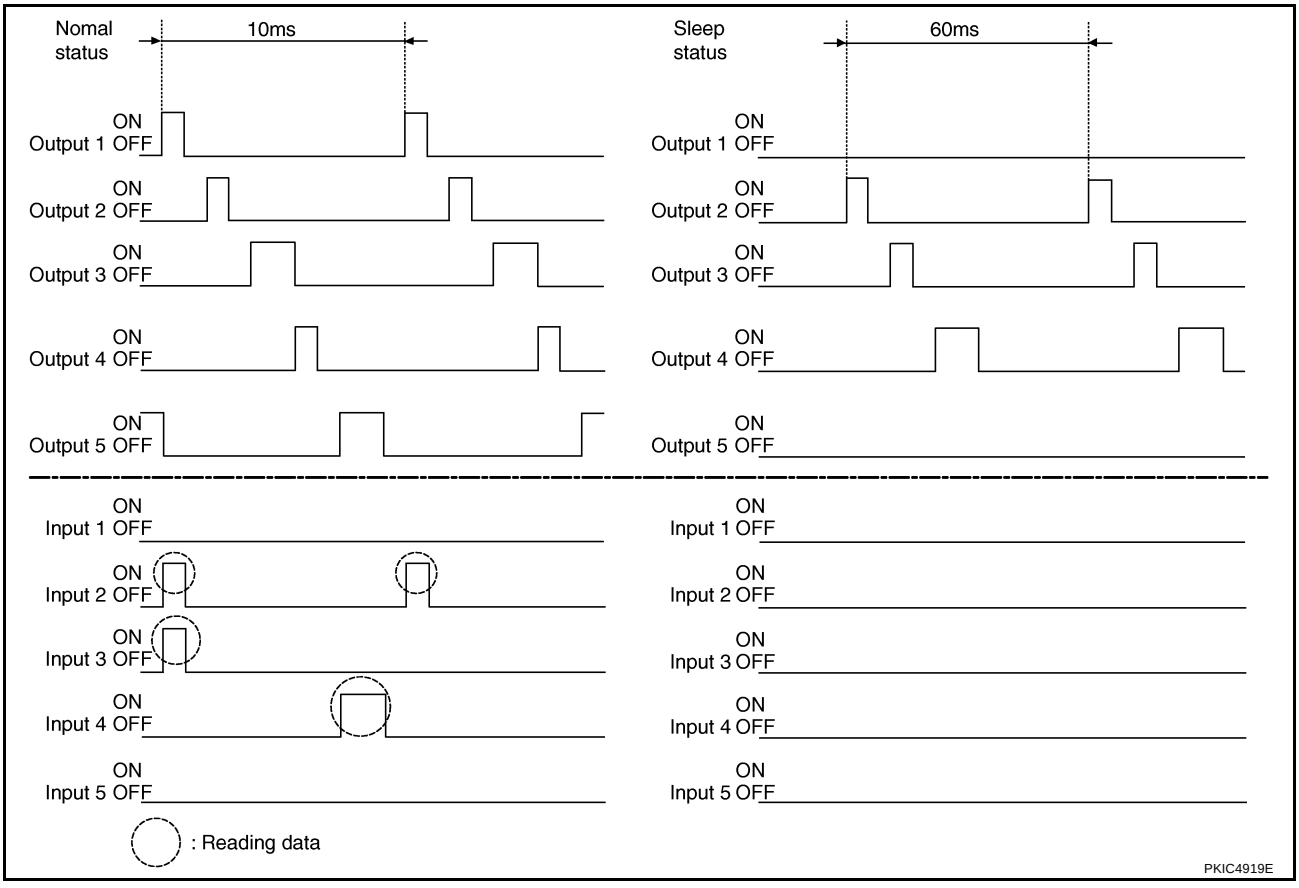

CAN Communication System Description

NKS000LW

CAN (Controller Area Network) is a serial communication line for real time application. It is an on-board multiplex communication line with high data communication speed and excellent error detection ability. Many electronic control units are equipped onto a vehicle, and each control unit shares information and links with other control units during operation (not independent). In CAN communication, control units are connected with 2 communication lines (CAN H line, CAN L line) allowing a high rate of information transmission with less wiring. Each control unit transmits/receives data but selectively reads required data only.

CAN Communication Unit

NKS000LX

Refer to LAN-47, "CAN System Specification Chart" .

Schematic

NKS000LY

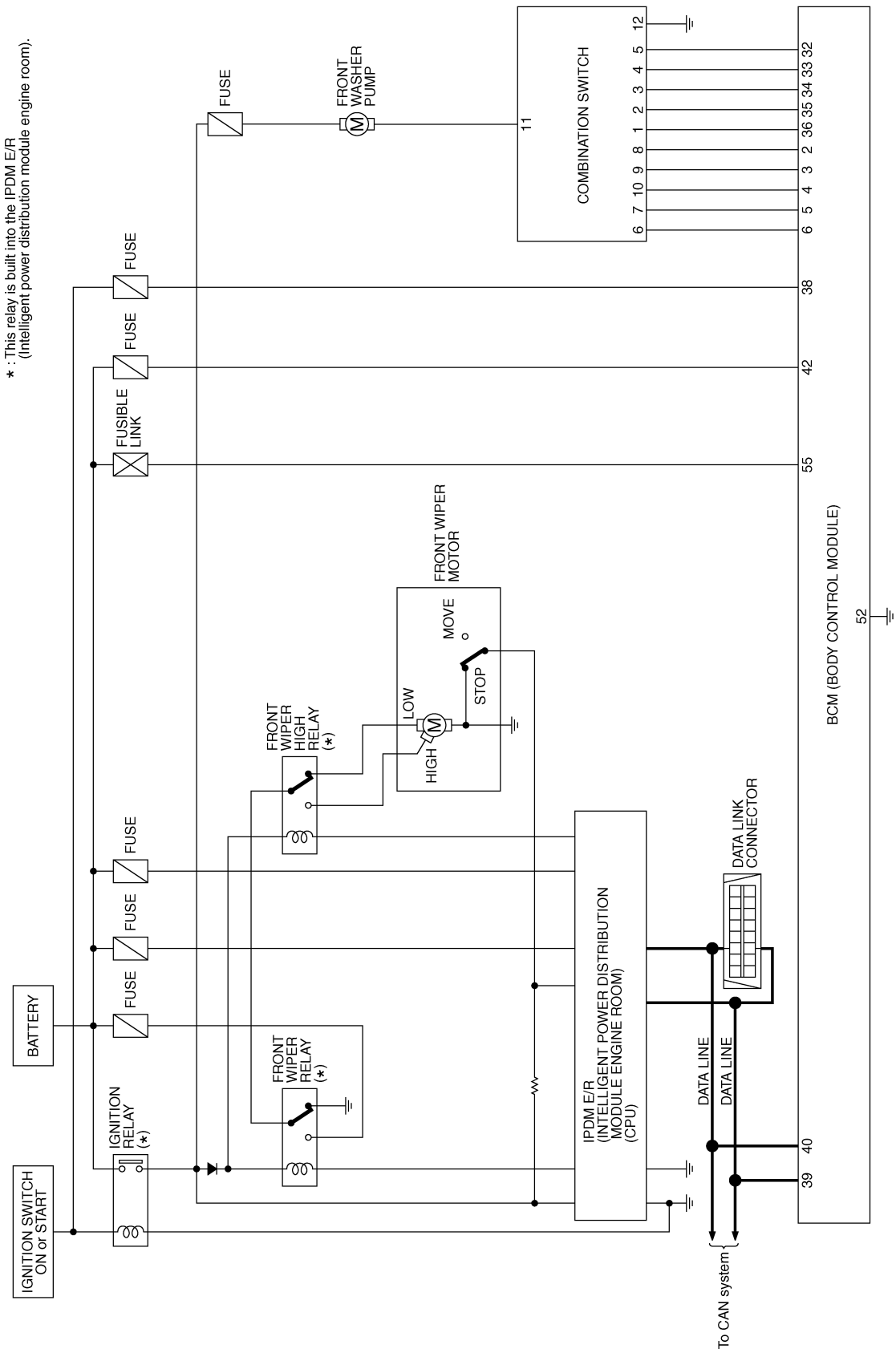

TKWM3902E

Wiring Diagram — WIPER —

NKS000LZ

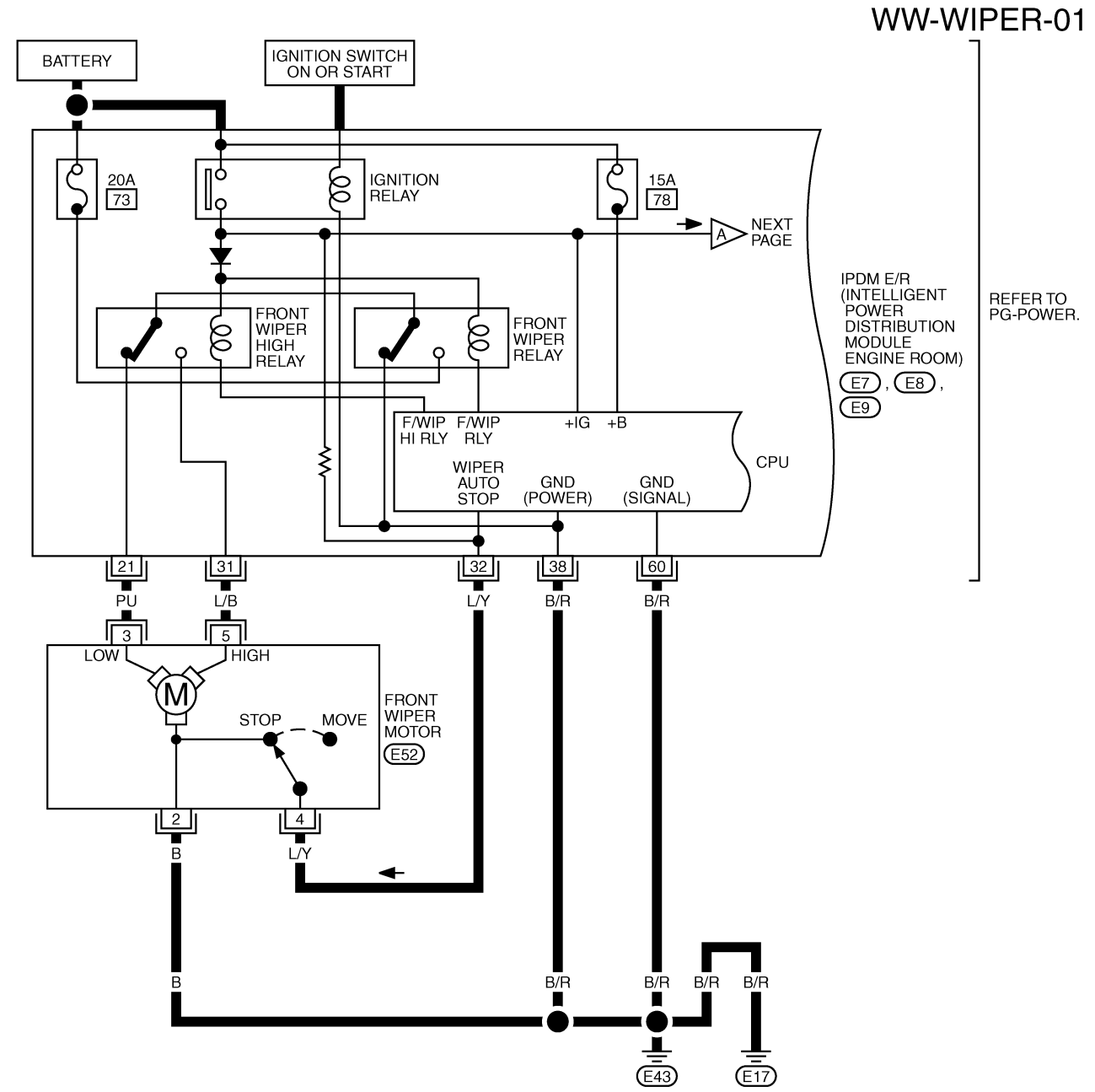

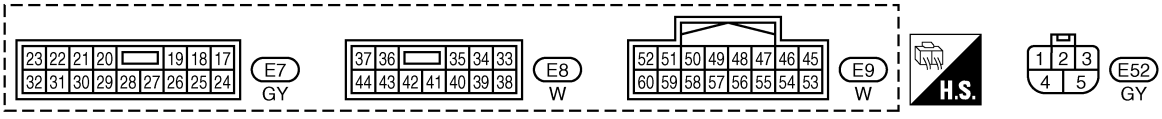

TKWM2226E

WW-WIPER-02

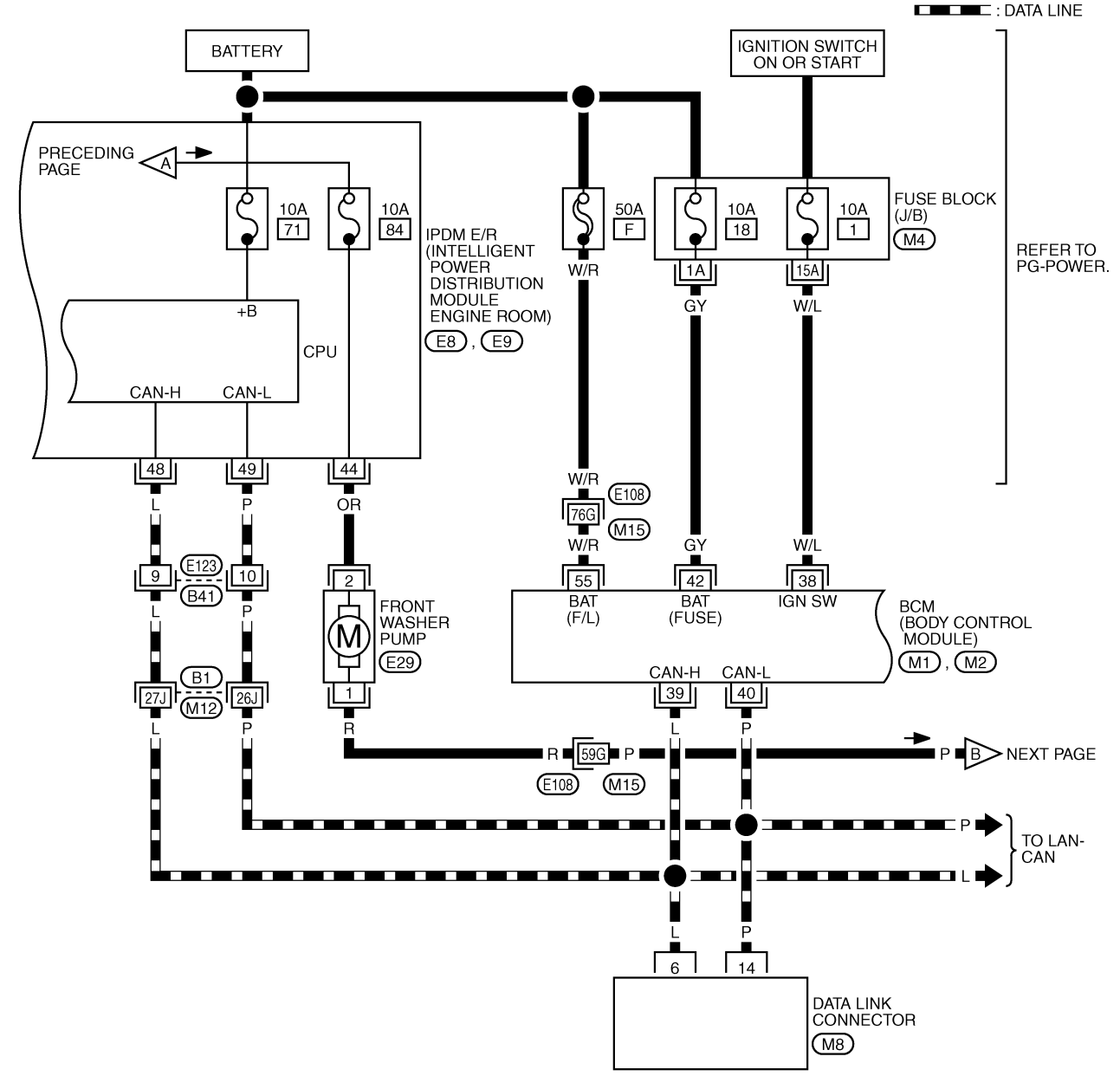

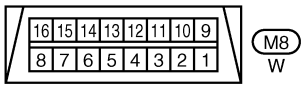

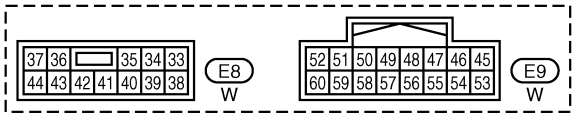

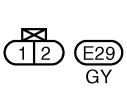

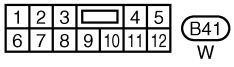

REFER TO THE FOLLOWING.

E108 , B1 -SUPER MULTIPLE JUNCTION (SMJ)

M4 -FUSE BLOCK-JUNCTION BOX (J/B)

M1 , M2 -ELECTRICAL UNITS

TKWM3492E

WW-WIPER-03

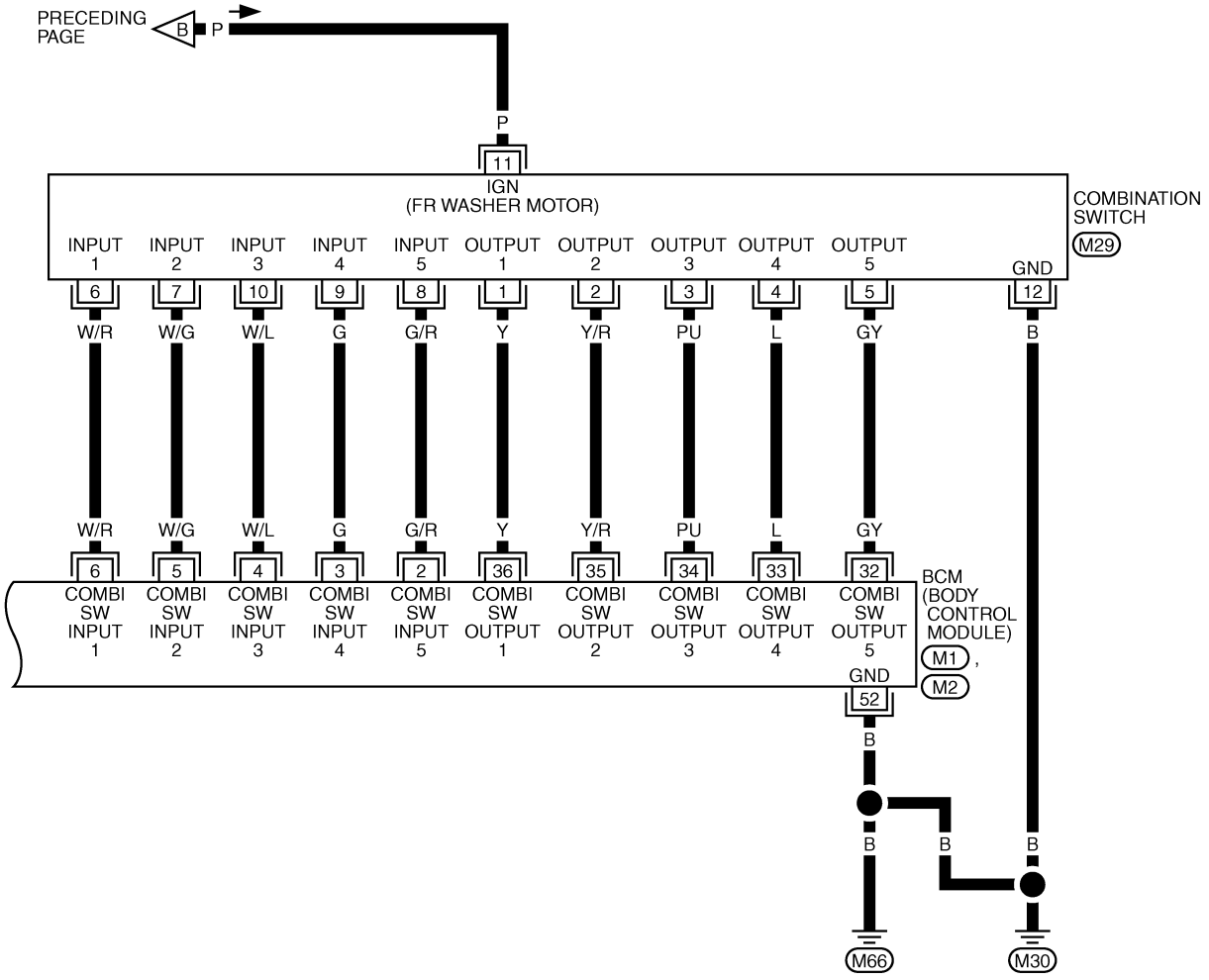

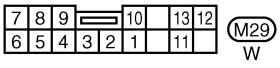

REFER TO THE FOLLOWING.
M1 , M2 -ELECTRICAL UNITS

TKWM2228E

Terminals and Reference Values for BCM

NKS000M0

Terminal No.	Wire color	Signal name	Measuring condition			Reference value
			Ignition switch	Operation or condition		
4	W/L	Combination switch input 3	ON	Lighting, turn, wiper switch (Wiper intermit-tent dial position 4)	OFF	Approx. 0 V
					Any of the conditions below ● Front wiper switch MIST ● Front wiper switch INT ● Front wiper switch LO	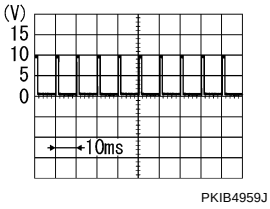 Approx. 1.0 V
5	W/G	Combination switch input 2	ON	Lighting, turn, wiper switch	OFF (Wiper intermittent dial position 4)	Approx. 0 V
					Any of the conditions below ● Front washer switch (Wiper intermittent dial position 4) ● Wiper intermittent dial position 1 ● Wiper intermittent dial position 5 ● Wiper intermittent dial position 6	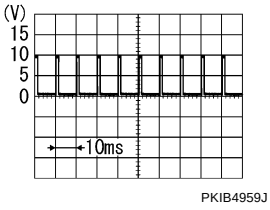 Approx. 1.0 V

Terminal No.	Wire color	Signal name	Measuring condition			Reference value
			Ignition switch	Operation or condition		
6	W/R	Combination switch input 1	ON	Lighting, turn, wiper switch	OFF (Wiper intermittent dial position 4)	Approx. 0 V
					Any of the conditions below ● Front wiper switch HI (Wiper intermittent dial position 4) ● Wiper intermittent dial position 3	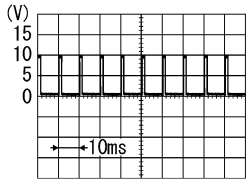 PKIB4959J Approx. 1.0 V
					Any of the conditions below ● Wiper intermittent dial position 1 ● Wiper intermittent dial position 2	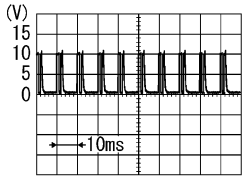 PKIB4952J Approx. 1.7 V
					Any of the conditions below ● Wiper intermittent dial position 6 ● Wiper intermittent dial position 7	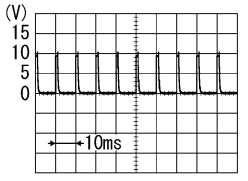 PKIB4955J Approx. 0.8 V
32	GY	Combination switch output 5	ON	Lighting, turn, wiper switch	OFF (Wiper intermittent dial position 4)	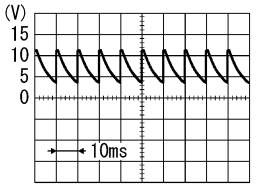 PKIB4960J Approx. 7.2 V
					Any of the conditions below ● Wiper intermittent dial position 1 ● Wiper intermittent dial position 2 ● Wiper intermittent dial position 6 ● Wiper intermittent dial position 7	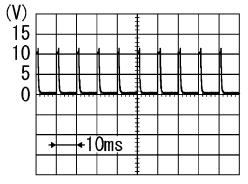 PKIB4956J Approx. 1.0 V

Terminal No.	Wire color	Signal name	Measuring condition			Reference value
			Ignition switch	Operation or condition		
33	L	Combination switch output 4	ON	Lighting, turn, wiper switch	OFF (Wiper intermittent dial position 4)	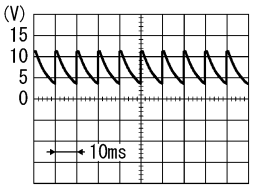 PKIB4960J Approx. 7.2 V
					Any of the conditions below ● Wiper intermittent dial position 1 ● Wiper intermittent dial position 5 ● Wiper intermittent dial position 6	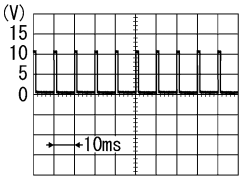 PKIB4958J Approx. 1.2 V
34	PU	Combination switch output 3	ON	Lighting, turn, wiper switch	OFF (Wiper intermittent dial position 4)	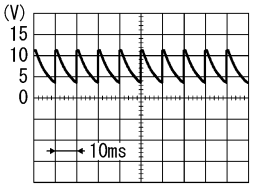 PKIB4960J Approx. 7.2 V
					Any of the conditions below ● Wiper intermittent dial position 1 ● Wiper intermittent dial position 2 ● Wiper intermittent dial position 3	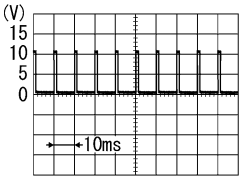 PKIB4958J Approx. 1.2 V
35	Y/R	Combination switch output 2	ON	Lighting, turn, wiper switch (Wiper intermit-tent dial position 4)	OFF	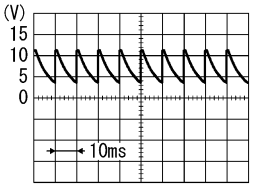 PKIB4960J Approx. 7.2 V
					Any of the conditions below ● Front wiper switch INT ● Front wiper switch HI	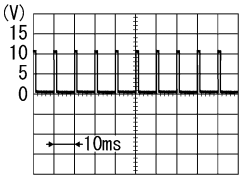 PKIB4958J Approx. 1.2 V

Terminal No.	Wire color	Signal name	Measuring condition			Reference value
			Ignition switch	Operation or condition		
36	Y	Combination switch output 1	ON	Lighting, turn, wiper switch (Wiper intermit-tent dial position 4)	OFF	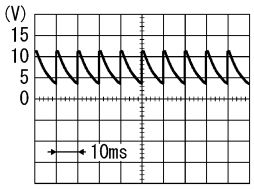 PKIB4960J Approx. 7.2 V
					Any of the conditions below ● Front wiper switch MIST ● Front wiper switch LO ● Front washer switch	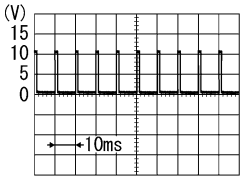 PKIB4958J Approx. 1.2 V
38	W/L	Ignition switch (ON)	ON	—		Battery voltage
39	L	CAN – H	—	—		—
40	P	CAN – L	—	—		—
42	GY	Battery power supply	OFF	—		Battery voltage
52	B	Ground	ON	—		Approx. 0 V
55	W/R	Battery power supply	OFF	—		Battery voltage

Terminals and Reference Values for IPDM E/R

NKS000M1

Terminal No.	Wire color	Signal name	Measuring condition			Reference value
			Ignition switch	Operation or condition		
21	PU	Low speed signal	ON	Wiper switch	OFF	Approx. 0 V
					LOW	Battery voltage
31	L/B	High speed signal	ON	Wiper switch	OFF	Approx. 0 V
					HI	Battery voltage
32	L/Y	Wiper auto stop signal	ON	Wiper operating		Battery voltage
				Wiper stopped		Approx. 0 V
38	B/R	Ground	ON	—		Approx. 0 V
44	OR	Washer motor power supply	ON	—		Battery voltage
48	L	CAN – H	—	—		—
49	P	CAN – L	—	—		—
60	B/R	Ground	ON	—		Approx. 0 V

How to Proceed With Trouble Diagnosis

NKS000M2

1. Confirm the symptoms and customer complaint.
2. Understand operation description and function description. Refer to WW-4, "System Description" .
3. Perform the preliminary check. Refer to WW-18, "Preliminary Check" .
4. Check symptom and repair or replace the cause of malfunction.
5. Does the front wiper and washer operate normally? If YES, GO TO 6. If NO, GO TO 4.
6. INSPECTION END

Preliminary Check

NKS000M3

CHECK POWER SUPPLY AND GROUND CIRCUIT

1. CHECK FUSES AND FUSIBLE LINK

Check for blown fuses and fusible link.

Unit	Power source	Fuse and fusible link No.
Front washer motor	Ignition switch ON or START	84
Front wiper motor, front wiper relay, front wiper HI relay	Battery	73
BCM	Battery	F
		18
	Ignition switch ON or START	1

Refer to WW-11, "Wiring Diagram — WIPER —" .

OK or NG

OK >> GO TO 2

NG >> If fuse or fusible link is blown, be sure to eliminate cause of malfunction before installing new fuse or fusible link. Refer to PG-3, "POWER SUPPLY ROUTING CIRCUIT" .

2. CHECK POWER SUPPLY CIRCUIT

1. Turn ignition switch OFF.
2. Disconnect BCM connector.
3. Check voltage between BCM harness connector and ground.

(+)		(−)	Ignition switch position	
BCM connector	Terminal		OFF	ON
M1	38	Ground	Approx. 0 V	Battery voltage
M2	42		Battery voltage	Battery voltage
	55		Battery voltage	Battery voltage

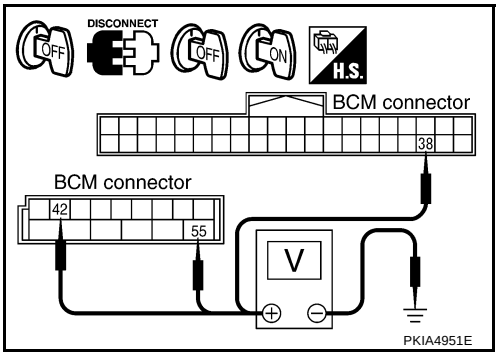

OK or NG

OK >> GO TO 3.

NG >> Repair harness or connector.

3. CHECK GROUND CIRCUIT

Check continuity between BCM harness connector and ground.

BCM connector	Terminal	Ground	Continuity
M2	52		Yes

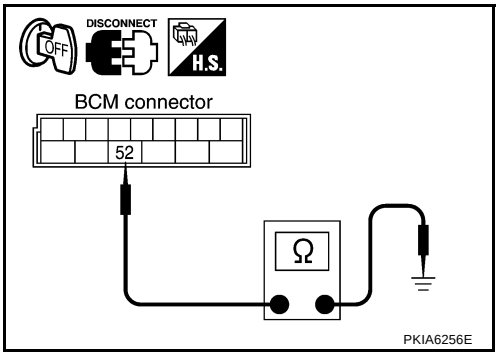

OK or NG

OK >> INSPECTION END

NG >> Repair harness or connector.

CONSULT-II Functions (BCM)

NKS000M4

CONSULT-II can display each diagnostic item using the diagnostic test mode shown following.

BCM diagnosis position	Diagnosis mode	Description
WIPER	WORK SUPPORT	Changes the setting for each function.
	DATA MONITOR	Displays BCM input data in real time.
	ACTIVE TEST	Device operation can be checked by applying a drive signal to device.
BCM	SELF-DIAG RESULTS	BCM performs self-diagnosis of CAN communication.
	CAN DIAG SUPPORT MNTR	The result of transmit/receive diagnosis of CAN communication can be read.

CONSULT-II BASIC OPERATION

Refer to GI-37, "CONSULT-II Start Procedure" .

WORK SUPPORT

Operation Procedure

1. Touch “WIPER” on “SELECT TEST ITEM” screen.
2. Touch “WORK SUPPORT” on “SELECT DIAG MODE” screen.
3. Touch “WIPER SPEED SETTING” on “SELECT WORK ITEM” screen.
4. Touch “START”.
5. Touch “CHANGE SET”.
6. The setting will be changed and “CUSTOMIZING COMPLETED” will be displayed.
7. Touch “END”.

Display Item List

Item	Description	CONSULT-II	Factory setting
WIPER SPEED SETTING	Vehicle speed sousing type wiper control mode can be changed in this mode. Vehicle speed sousing type wiper control mode between two ON/OFF.	ON	—
		OFF	×

DATA MONITOR

Operation Procedure

1. Touch “WIPER” on “SELECT TEST ITEM” screen.
2. Touch “DATA MONITOR” on “SELECT DIAG MODE” screen.
3. Touch either “ALL SIGNALS” or “SELECTION FROM MENU” on “SELECT MONITOR ITEM” screen.

ALL SIGNALS	Monitors all the signals.
SELECTION FROM MENU	Selects items and monitors them.

4. When “SELECTION FROM MENU” is selected, touch items to be monitored. When “ALL SIGNALS” is selected, all the items will be monitored.
5. Touch “START”.
6. Touch “RECORD” while monitoring, then the status of the monitored item can be recorded. To stop recording, touch “STOP”.

Display Item List

Monitor item		Contents
IGN ON SW	“ON/OFF”	Displays status (ignition switch IGN position: ON/other: OFF) of ignition switch judged from the ignition switch signal.
IGN SW CAN	“ON/OFF”	Displays status (ignition switch IGN position: ON/other: OFF) of ignition switch judged from the ignition switch signal (CAN communication lines).
FR WIPER HI	“ON/OFF”	Displays status (front wiper switch high position: ON/other: OFF) of front wiper high switch judged from the wiper switch signal.
FR WIPER LOW	“ON/OFF”	Displays status (front wiper switch low position: ON/other: OFF) of front wiper low switch judged from the wiper switch signal.

Monitor item		Contents
FR WIPER INT	“ON/OFF”	Displays status (front wiper switch intermittent position: ON/other: OFF) of front wiper intermittent switch judged from the wiper switch signal.
FR WASHER SW	“ON/OFF”	Displays status (front washer switch ON position: ON/other: OFF) of front washer switch judged from the wiper switch signal.
INT VOLUME	“1 - 7”	Displays status (wiper intermittent dial position setting 1-7) of intermittent volume switch judged from the wiper switch signal.
FR WIPER STOP	“ON/OFF”	Displays status (front wiper stop position: ON/move: OFF) of front wiper motor stop judged from the front wiper auto stop signal.
VEHICLE SPEED	“km/h”	Displays status vehicle speed as judged from vehicle speed signal.
RR WIPER ON NOTE	“OFF”	—
RR WIPER INT NOTE	“OFF”	—
RR WASHER SW NOTE	“OFF”	—
RR WIPER STOP NOTE	“OFF”	—
RR WIPER STP2 NOTE	“OFF”	—

NOTE:
This item is displayed, but cannot be monitored.

ACTIVE TEST

Operation Procedure

1. Touch “WIPER” on “SELECT TEST ITEM” screen.
2. Touch “ACTIVE TEST” on “SELECT DIAG MODE” screen.
3. Touch item to be tested and check operation of the selected item.
4. During the operation check, touching “BACK” deactivates the operation.

Display Item List

Test item	Display on CONSULT-II screen	Description
Front wiper output	FR WIPER	With a certain operation (OFF, HI, LO, INT), front wiper can be operated.
Rear wiper output NOTE	RR WIPER	—

NOTE:
This item is displayed, but cannot be tested.

CONSULT-II Functions (IPDM E/R)

NKS000M5

CONSULT-II can display each diagnostic item using the diagnostic test mode shown following.

Diagnosis Mode	Description
SELF–DIAG RESULTS	Refer to PG-18, "SELF-DIAG RESULTS" .
DATA MONITOR	The input/output data of IPDM E/R is displayed in real time.
CAN DIAG SUPPORT MNTR	The result of transmit/receive diagnosis of CAN communication can be read.
ACTIVE TEST	IPDM E/R sends a drive signal to electronic components to check their operation.

CONSULT-II BASIC OPERATION

Refer to GI-37, "CONSULT-II Start Procedure" .

DATA MONITOR

Operation Procedure

1. Touch “DATA MONITOR” on “SELECT DIAG MODE ” screen.
2. Touch “ALL SIGNALS”, “MAIN SIGNALS” or “SELECTION FROM MENU” on “SELECT MONITOR ITEM” screen.

ALL SIGNALS	Monitors all items.
MAIN SIGNALS	Monitor the predetermined item.
SELECTION FROM MENU	Selects items and monitors them.

3. When “SELECTION FROM MENU” is selected, touch items to be monitored. In “ALL SIGNALS”, all items are monitored. In “MAIN SIGNALS”, predetermined items are monitored.
4. Touch “START”.
5. Touch “RECORD” while monitoring to record the status of the item being monitored. To stop recording, touch “STOP”.

All Signals, Main Signals, Selection From Menu

Item name	CONSULT-II screen display	Display or unit	Monitor item selection			Description
			ALL SIGNALS	MAIN SIGNALS	SELECTION FROM MENU	
FR wiper request	FR WIP REQ	STOP/1LOW/ LOW/HI	×	×	×	Signal status input from BCM
Wiper auto stop	WIP AUTO STOP	ACT P/STOP P	×	×	×	Output status of IPDM E/R
Wiper protection	WIP PROT	OFF/BLOCK	×	×	×	Control status of IPDM E/R

NOTE:
Perform monitoring of IPDM E/R data with ignition switch ON. When ignition switch is at ACC, the display may not be correct.

ACTIVE TEST

Operation Procedure

1. Touch “ACTIVE TEST” on “SELECT DIAG MODE” screen.
2. Touch item to be tested, and check operation.
3. Touch “START”.
4. Touch “STOP” while testing to stop the operation.

Test item	CONSULT-II screen display	Description
Front wiper (HI, LO) output	FR WIPER	With a certain operation (OFF, HI ON, LO ON), front wiper relay (Lo, Hi) can be operated.

Front Wiper Does Not Operate

NKS000M6

CAUTION:

During IPDM E/R fail-safe control, front wipers may not operate. Refer to PG-16, "CAN COMMUNICATION LINE CONTROL" in "PG IPDM E/R" to make sure that it is not in fail-safe status.

1. ACTIVE TEST

With CONSULT-II

1. Select "IPDM E/R" by CONSULT-II, and select "ACTIVE TEST" on "SELECT DIAG MODE" screen.
2. Select "FRONT WIPER" on "SELECT TEST ITEM" screen.
3. Touch "LO" or "HI" screen.

Without CONSULT-II

Start auto active test. Refer to PG-21, "Auto Active Test" .

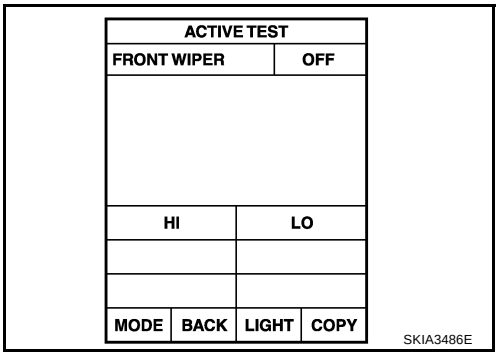

Does front wiper operate normally?

YES >> GO TO 5.
NO >> GO TO 2.

2. CHECK FRONT WIPER CIRCUIT

1. Turn ignition switch OFF.
2. Disconnect IPDM E/R connector and front wiper motor connector.
3. Check continuity between IPDM E/R harness connector and front wiper motor harness connector.

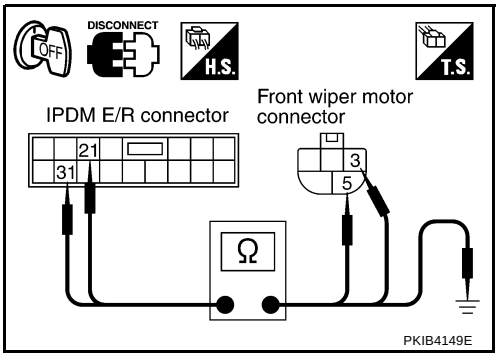

IPDM E/R		Front wiper motor		Continuity
Connector	Terminal	Connector	Terminal	
E7	21	E52	3	Yes
	31		5	

4. Check continuity between IPDM E/R harness connector and ground.

IPDM E/R		Ground	Continuity
Connector	Terminal		
E7	21		No
	31		

OK or NG

OK >> GO TO 3.
NG >> Repair harness or connector.

3. CHECK GROUND CIRCUIT

Check continuity between front wiper motor harness connector E52 terminal 2 and ground.

2 – Ground : Continuity should exist.

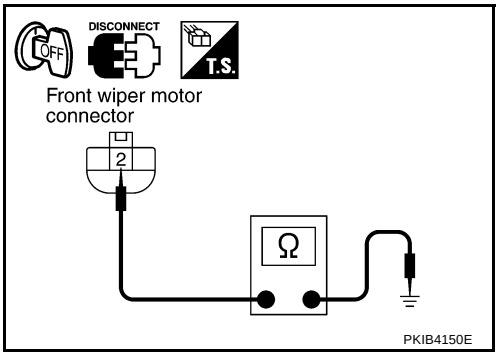

OK or NG

OK >> GO TO 4.
NG >> Repair harness or connector.

4. CHECK IPDM E/R

With CONSULT-II

1. Connect IPDM E/R connector and front wiper motor connector.
2. Select “IPDM E/R” by CONSULT-II, and select “ACTIVE TEST” on “SELECT DIAG MODE” screen.
3. Select “FRONT WIPER” on “SELECT TEST ITEM” screen.
4. Touch “LO” or “HI” screen.
5. Check voltage between IPDM E/R harness connector and ground while front wiper (HI, LO) is operating.

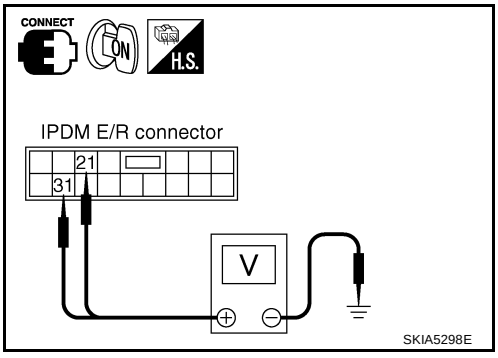

(+)		(–)	Condition	Voltage
IPDM E/R connector	Terminal			
E7	21	Ground	Stopped	Approx. 0 V
			LO operation	Battery voltage
	31		Stopped	Approx. 0 V
			HI operation	Battery voltage

Without CONSULT-II

1. Connect IPDM E/R connector and front wiper motor connector.
2. Start auto active test. Refer to PG-21, "Auto Active Test" .
3. Check voltage between IPDM E/R harness connector and ground while front wiper (HI, LO) is operating.

(+)		(–)	Condition	Voltage
IPDM E/R connector	Terminal			
E7	21	Ground	Stopped	Approx. 0 V
			LO operation	Battery voltage
	31		Stopped	Approx. 0 V
			HI operation	Battery voltage

OK or NG

OK >> Replace front wiper motor. Refer to WW-33, "Removal and Installation of Front Wiper Drive Assembly" .

NG >> Replace IPDM E/R. Refer to PG-27, "Removal and Installation of IPDM E/R" .

5. CHECK CIRCUIT BETWEEN COMBINATION SWITCH AND BCM

With CONSULT-II

1. Select “BCM” on CONSULT-II, and select “WIPER” on “SELECT TEST ITEM” screen.
2. Select “DATA MONITOR” on “SELECT DIAG MODE” screen. Make sure that “FR WIPER INT”, “FR WIPER LOW”, and “FR WIPER HI” turn ON-OFF according to wiper switch operation.

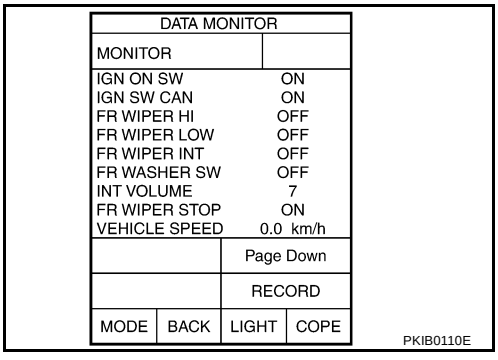

Without CONSULT-II

Refer to LT-100, "Combination Switch Inspection" .

OK or NG

OK >> GO TO 6.

NG >> Check combination switch (wiper switch). Refer to LT-100, "Combination Switch Inspection" .

6. CHECK CIRCUIT BETWEEN IPDM E/R AND BCM

Select “BCM” on CONSULT-II, and perform self-diagnosis for “BCM”.

Displayed self-diagnosis results

NO DTC>>Replace BCM. Refer to BCS-16, "Removal and Installation of BCM" .

CAN COMM CIRCUIT>>Check CAN communication line of BCM. Refer to BCS-15, "CAN Communication Inspection Using CONSULT-II (Self-Diagnosis)" .

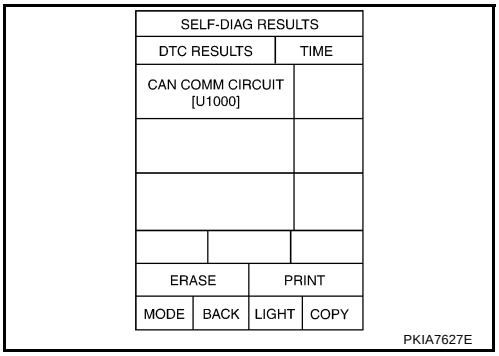

Front Wiper Does Not Return to Stop Position

NKS000M7

1. CHECK FRONT WIPER STOP SIGNAL

With CONSULT-II

Select “IPDM E/R” on CONSULT-II. With “DATA MONITOR”, make sure that “WIP AUTO STOP” turns “ACT P” - “STOP P” linked with front wiper operation.

Without CONSULT-II

GO TO 2.

OK or NG

OK >> Replace IPDM E/R. Refer to PG-27, "Removal and Installation of IPDM E/R" .

NG >> GO TO 2.

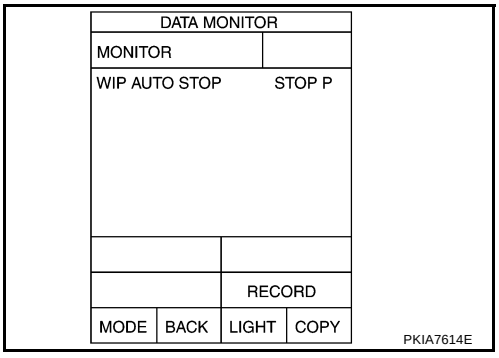

2. CHECK IPDM E/R

1. Turn ignition switch OFF.
2. Disconnect front wiper motor connector.
3. Turn ignition switch ON.
4. Check voltage between front wiper motor harness connector E52 terminal 4 and ground.

4 – Ground : Battery voltage.

OK or NG

OK >> GO TO 4.

NG >> GO TO 3.

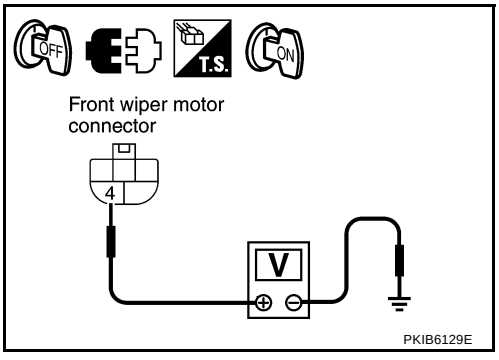

3. CHECK FRONT WIPER AUTO STOP CIRCUIT

1. Turn ignition switch OFF.
2. Disconnect IPDM E/R connector.
3. Check continuity between IPDM E/R harness connector E7 terminal 32 and front wiper motor harness connector E52 terminal 4.

   32 – 4 : Continuity should exist.

4. Check continuity between IPDM E/R harness connector E7 terminal 32 and ground.

   32 – Ground : Continuity should not exist.

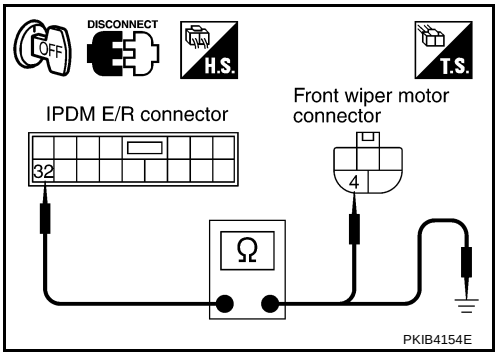

OK or NG

OK >> Replace IPDM E/R. Refer to PG-27, "Removal and Installation of IPDM E/R" .
NG >> Repair harness or connector.

4. CHECK IPDM E/R

1. Connect IPDM E/R connector and front wiper motor connector.
2. Turn ignition switch ON.
3. Check voltage between IPDM E/R harness connector and ground while front wiper motor is stopped and while it is operating.

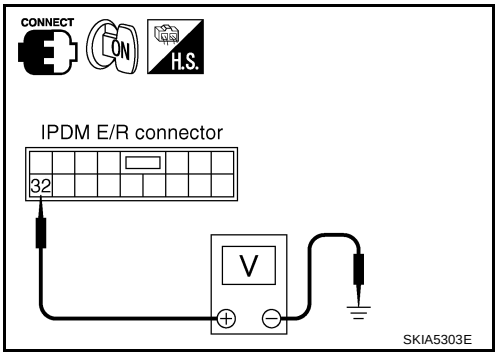

(+)		(–)	Condition	Voltage
IPDM E/R connector	Terminal			
E7	32	Ground	Wiper stopped	Approx. 0 V
			Wiper operating	Battery voltage

OK or NG

OK >> Replace IPDM E/R. Refer to PG-27, "Removal and Installation of IPDM E/R" .
NG >> Replace front wiper motor. Refer to WW-33, "Removal and Installation of Front Wiper Drive Assembly" .

Only Front Wiper Low Does Not Operate

NKS000M8

1. ACTIVE TEST

With CONSULT-II

1. Select “IPDM E/R” by CONSULT-II, and select “ACTIVE TEST” on “SELECT DIAG MODE” screen.
2. Select “FRONT WIPER” on “SELECT TEST ITEM” screen.
3. Touch “LO” screen.

Without CONSULT-II

Start up auto active test. Refer to PG-21, "Auto Active Test" .

Does front wiper operate normally?

YES >> Refer to LT-100, "Combination Switch Inspection" .
NO >> GO TO 2.

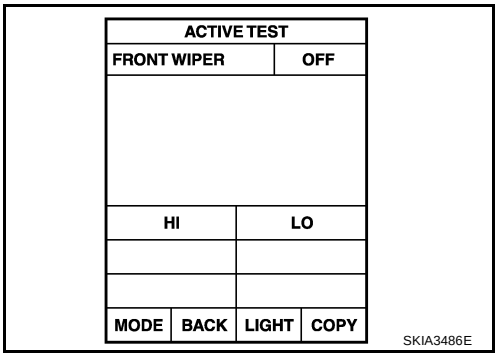

2. CHECK FRONT WIPER MOTOR CIRCUIT

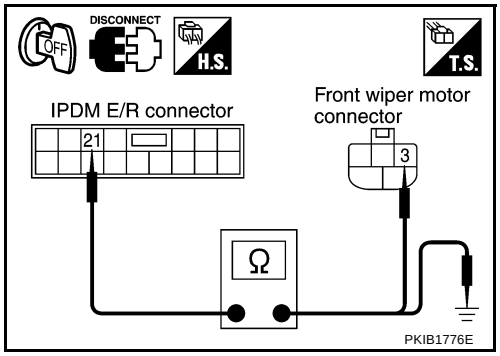

1. Turn ignition switch OFF.
2. Disconnect IPDM E/R connector and front wiper motor connector.
3. Check continuity between IPDM E/R harness connector E7 terminal 21 and front wiper motor harness E52 connector terminal 3.

   21 – 3 : Continuity should exist.

4. Check continuity between IPDM E/R harness connector E7 terminal 21 and ground.

   21 – Ground : Continuity should not exist.

OK or NG

OK >> GO TO 3.
NG >> Repair harness or connector.

3. CHECK IPDM E/R

With CONSULT-II

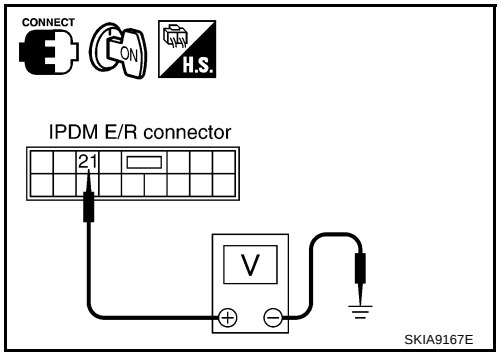

1. Connect IPDM E/R connector and front wiper motor connector.
2. Select “IPDM E/R” by CONSULT-II, and select “ACTIVE TEST” on “SELECT DIAG MODE” screen.
3. Select “FRONT WIPER” on “SELECT TEST ITEM” screen.
4. Touch “LO” screen.
5. Check voltage between IPDM E/R harness connector E7 terminal 21 and ground while front wiper LO is operating.

   21 – Ground : Battery voltage.

Without CONSULT-II

1. Connect IPDM E/R connector and front wiper motor connector.
2. Start auto active test. Refer to PG-21, "Auto Active Test" .
3. Check voltage between IPDM E/R harness connector E7 terminal 21 and ground while front wiper LO is operating.

   21 – Ground : Battery voltage.

OK or NG

OK >> Replace front wiper motor. Refer to WW-33, "Removal and Installation of Front Wiper Drive Assembly" .
NG >> Replace IPDM E/R. Refer to PG-27, "Removal and Installation of IPDM E/R" .

Only Front Wiper Hi Does Not Operate

NKS000M9

1. ACTIVE TEST

With CONSULT-II

1. Select “IPDM E/R” by CONSULT-II, and select “ACTIVE TEST” on “SELECT DIAG MODE” screen.
2. Select “FRONT WIPER” on “SELECT TEST ITEM” screen.
3. Touch “HI” screen.

Without CONSULT-II

Start auto active test. Refer to PG-21, "Auto Active Test" .

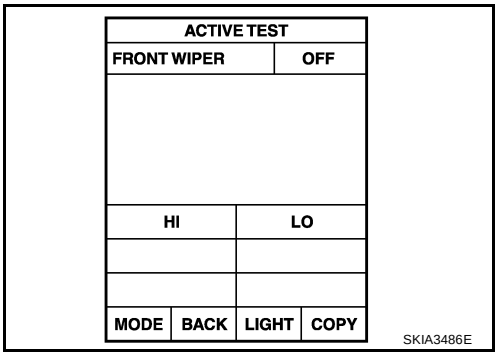

Does front wiper operate normally?

YES >> Refer to LT-100, "Combination Switch Inspection" .
NO >> GO TO 2.

2. CHECK FRONT WIPER MOTOR CIRCUIT

1. Turn ignition switch OFF.
2. Disconnect IPDM E/R connector and front wiper motor connector.
3. Check continuity between IPDM E/R harness connector E7 terminal 31 and front wiper motor harness E52 connector terminal 5.

31 – 5 : Continuity should exist.

4. Check continuity between IPDM E/R harness connector E7 terminal 31 and ground.

31 – Ground : Continuity should not exist.

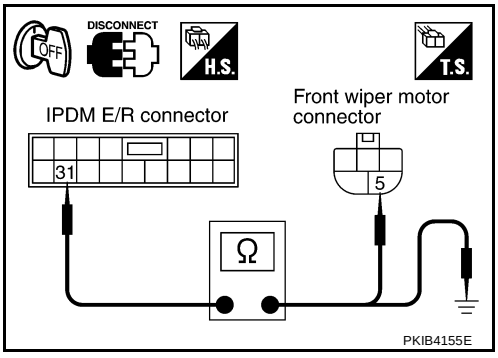

OK or NG

OK >> GO TO 3.
NG >> Repair harness or connector.

3. CHECK IPDM E/R

With CONSULT-II

1. Connect IPDM E/R connector and front wiper motor connector.
2. Select “IPDM E/R” by CONSULT-II, and select “ACTIVE TEST” on “SELECT DIAG MODE” screen.
3. Select “FRONT WIPER” on “SELECT TEST ITEM” screen.
4. Touch “HI” screen.
5. Check voltage between IPDM E/R harness connector E7 terminal 31 and ground while front wiper HI is operating.

31 - Ground : Battery voltage.

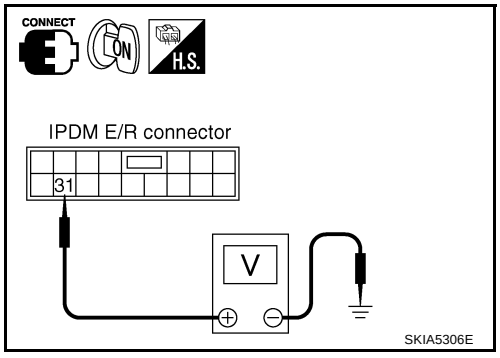

Without CONSULT-II

1. Connect IPDM E/R connector and front wiper motor connector.
2. Start auto active test. Refer to PG-21, "Auto Active Test" .
3. Check voltage between IPDM E/R harness connector E7 terminal 31 and ground while front wiper HI is operating.

31 - Ground : Battery voltage.

OK or NG

OK >> Replace front wiper motor. Refer to WW-33, "Removal and Installation of Front Wiper Drive Assembly" .

NG >> Replace IPDM E/R. Refer to PG-27, "Removal and Installation of IPDM E/R" .

Only Front Wiper Intermittent Does Not Operate

NKS000MA

1. CHECK COMBINATION SWITCH

With CONSULT-II

1. Select “BCM” on CONSULT-II, and select “WIPER” on “SELECT TEST ITEM” screen.
2. Select “DATA MONITOR” on “SELECT DIAG MODE” screen. Make sure that “FR WIPER INT”, turn ON-OFF according to wiper switch operation.

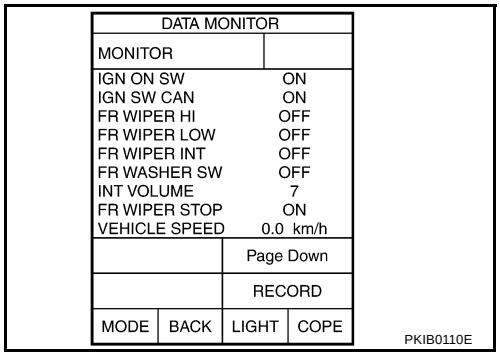

DATA MONITOR	
MONITOR	
IGN ON SW	ON
IGN SW CAN	ON
FR WIPER HI	OFF
FR WIPER LOW	OFF
FR WIPER INT	OFF
FR WASHER SW	OFF
INT VOLUME	7
FR WIPER STOP	ON
VEHICLE SPEED	0.0 km/h
	Page Down
	RECORD
MODE / BACK	LIGHT / COPE

PKIB0110E

Without CONSULT-II

Refer to LT-100, "Combination Switch Inspection" .

OK or NG

OK >> Replace BCM. Refer to BCS-16, "Removal and Installation of BCM" .

NG >> Check combination switch (wiper switch) Refer to LT-100, "Combination Switch Inspection" .

Front Wiper Interval Time Is Not Controlled by Vehicle Speed

NKS000MB

1. CHECK FUNCTION OF COMBINATION METER

Confirm that speedometer operates normally.

Does front wiper operate normally?

YES >> GO TO 2.

NO >> Combination meter vehicle speed system malfunction. Refer to DI-15, "Vehicle Speed Signal Inspection" .

2. CHECK CAN COMMUNICATION BETWEEN BCM AND COMBINATION METER

Select “BCM” on CONSULT-II, and perform self-diagnosis for “BCM”.

Displayed self-diagnosis results

NO DTC>>Replace BCM. Refer to BCS-16, "Removal and Installation of BCM" .

CAN COMM CIRCUIT>>Check CAN communication line of BCM. Refer to BCS-15, "CAN Communication Inspection Using CONSULT-II (Self-Diagnosis)" .

SELF-DIAG RESULTS	
DTC RESULTS	TIME
CAN COMM CIRCUIT [U1000]	
ERASE	PRINT
MODE / BACK	LIGHT / COPY

PKIA7627E

Front Wiper Intermittent Operation Switch Position Cannot Be Adjusted

NKS000MC

1. CHECK CIRCUIT BETWEEN COMBINATION SWITCH AND BCM

With CONSULT-II

1. Select “BCM” on CONSULT-II, and select “WIPER” on “SELECT TEST ITEM” screen.
2. Select “DATA MONITOR” on “SELECT DIAG MODE” screen. Make sure that “INT VOLUME”, changes in order form 1 to 7 according to wiper switch operation.

Without CONSULT-II

Refer to LT-100, "Combination Switch Inspection" .

OK or NG

OK >> Replace BCM. Refer to BCS-16, "Removal and Installation of BCM" .

NG >> Check combination switch (wiper switch). Refer to LT-100, "Combination Switch Inspection" .

DATA MONITOR	
MONITOR	
IGN ON SW	ON
IGN SW CAN	ON
FR WIPER HI	OFF
FR WIPER LOW	OFF
FR WIPER INT	OFF
FR WASHER SW	OFF
INT VOLUME	7
FR WIPER STOP	ON
VEHICLE SPEED	0.0 km/h
	Page Down
	RECORD
MODE / BACK	LIGHT / COPE

PKIB0110E

Wiper Does Not Wipe When Front Washer Operates

NKS000MD

1. CHECK CIRCUIT BETWEEN COMBINATION SWITCH AND BCM

With CONSULT-II

1. Select “BCM” on CONSULT-II, and select “WIPER” on “SELECT TEST ITEM” screen.
2. Select “DATA MONITOR” on “SELECT DIAG MODE” screen. Make sure that “FR WASHER SW” turn ON-OFF according to wiper switch operation.

Without CONSULT-II

Refer to LT-100, "Combination Switch Inspection" .

OK or NG

OK >> Replace BCM. Refer to BCS-16, "Removal and Installation of BCM" .

NG >> Check combination switch (wiper switch). Refer to LT-100, "Combination Switch Inspection" .

DATA MONITOR	
MONITOR	
IGN ON SW	ON
IGN SW CAN	ON
FR WIPER HI	OFF
FR WIPER LOW	OFF
FR WIPER INT	OFF
FR WASHER SW	OFF
INT VOLUME	7
FR WIPER STOP	ON
VEHICLE SPEED	0.0 km/h
	Page Down
	RECORD
MODE / BACK	LIGHT / COPE

PKIB0110E

After Front Wiper Operate for 10 Seconds They Stop for 20 Seconds, and After Repeating the Operations Five Times They Become Inoperative

NKS000ME

CAUTION:

- **When auto-stop signal has not varied for 10 seconds or longer while IPDM E/R is operating front wipers, IPDM E/R considers that front wipers are locked, and stops wiper output. That causes this symptom.**
- **This status can be checked by “DATA MONITOR” of “IPDM E/R” on which “WIPER PROTECTION” item shows “BLOCK”.**

1. CHECK WIPER MOTOR SIGNAL

With CONSULT-II

Select “IPDM E/R” by CONSULT-II. With “DATA MONITOR”, make sure that “WIP AUTO STOP” turns “ACT P” - “STOP P” linked with front wiper operation.

Without CONSULT-II

GO TO 2.

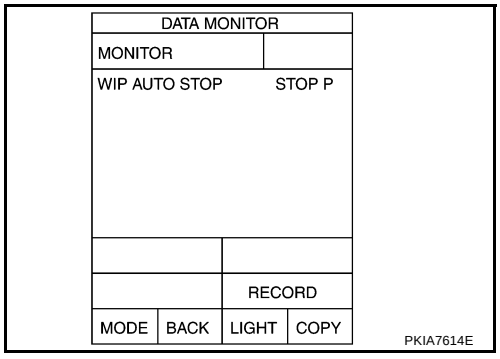

OK or NG

OK >> Replace IPDM E/R. Refer to PG-27, "Removal and Installation of IPDM E/R" .

NG >> GO TO 2.

2. CHECK WIPER AUTO STOP CIRCUIT

1. Turn ignition switch OFF.
2. Disconnect IPDM E/R connector and front wiper motor connector.
3. Check continuity between IPDM E/R harness connector E7 terminal 32 and front wiper motor harness connector E52 terminal 4.

32 - 4 : Continuity should exist.

4. Check continuity between IPDM E/R harness connector E7 terminal 32 and ground.

32 - Ground : Continuity should not exist.

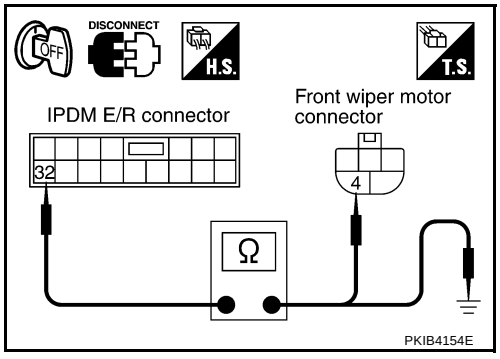

OK or NG

OK >> GO TO 3.

NG >> Repair harness or connector.

3. CHECK FRONT WIPER MOTOR

1. Connect IPDM E/R connector and front wiper connector.
2. Turn ignition switch ON.
3. Check voltage between IPDM E/R harness connector and ground while front wiper motor is stopped and while it is operating.

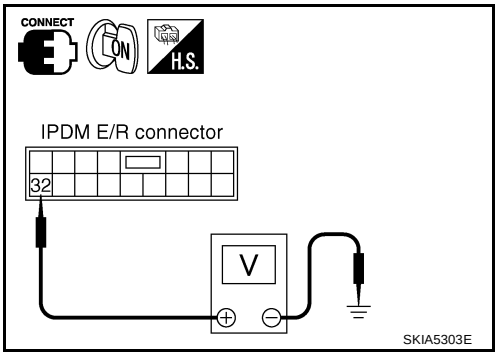

(+)		(–)	Condition	Voltage
IPDM E/R connector	Terminal			
E7	32	Ground	Wiper stopped	Approx. 0 V
			Wiper operating	Battery voltage

OK or NG

OK >> Replace IPDM E/R. Refer to PG-27, "Removal and Installation of IPDM E/R" .

NG >> Replace front wiper motor. Refer to WW-33, "Removal and Installation of Front Wiper Drive Assembly" .

Front Wiper Does Not Stop

NKS000MF

1. CHECK CIRCUIT BETWEEN COMBINATION SWITCH AND BCM

With CONSULT-II

1. Select “BCM” on CONSULT-II, and select “WIPER” on “SELECT TEST ITEM” screen.
2. Select “DATA MONITOR” on “SELECT DIAG MODE” screen. Make sure that “FR WIPER INT”, “FR WIPER LOW”, “FR WIPER HI”, and “FR WASHER SW” turn ON-OFF according to wiper switch operation.

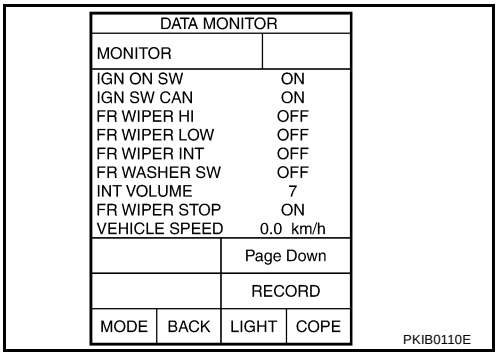

Without CONSULT-II

Refer to LT-100, "Combination Switch Inspection" .

OK or NG

OK >> Replace IPDM E/R. Refer to PG-27, "Removal and Installation of IPDM E/R" .

NG >> Check combination switch (wiper switch). Refer to LT-100, "Combination Switch Inspection" .

Removal and Installation of Front Wiper Arms, Adjustment of Wiper Arms Stop Location

NKS000MG

REMOVAL

1. Turn front wiper switch ON to operate wiper motor, and then turn front wiper switch OFF (auto stop).
2. Open hood, remove front wiper arm caps, and remove front wiper arm nuts.
3. Raise front wiper arms, and remove front wiper arms from vehicle.

INSTALLATION

1. Clean up the pivot area as shown in the figure. This will reduce possibility of front wiper arm nuts looseness.
2. Prior to front wiper arms installation, turn front wiper switch ON to operate wiper motor, and then turn front wiper switch OFF (auto stop).

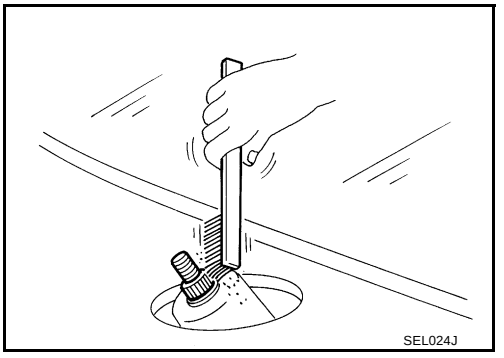

3. Lift the blade up and then set it down onto windshield glass surface to set the blade center to clearance “L1” & “L2” immediately.
4. Tighten front wiper arm nuts to specified torque.

   Front wiper arm nuts : 23.6 N·m (2.4 kg-m, 17 ft-lb)

5. Spray washer fluid. Turn front wiper switch ON to operate wiper motor, and then turn front wiper switch OFF (auto stop).
6. Make sure that wiper blades stop within clearance “L1” & “L2”.

   Clearance “L1” : 47.1 - 62.1 mm (1.854 - 2.445 in)

   Clearance “L2” : 32.1 - 47.1 mm (1.264 - 1.854 in)

7. Install front wiper arm caps.

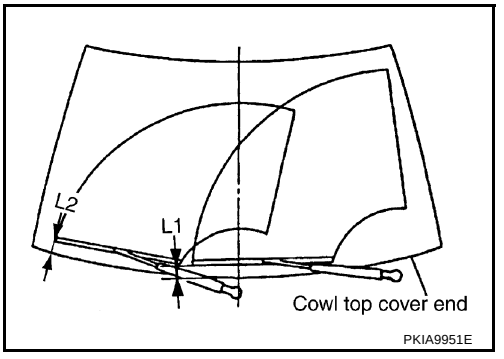

Removal and Installation of Front Wiper Drive Assembly

NKS000MH

REMOVAL

1. Remove wiper arms. Refer to WW-32, "REMOVAL" .
2. Remove cowl top cover. Refer to EI-19, "Removal and Installation" .
3. Disconnect wiper motor connector and remove connector clips.
4. Remove front wiper drive assembly mounting bolts, and remove front wiper drive assembly from the vehicle.

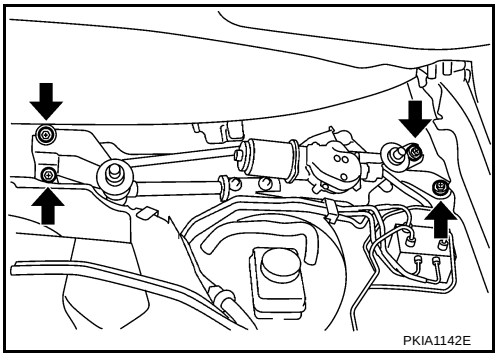

INSTALLATION

1. Install front wiper drive assembly to the vehicle.

Front wiper drive assembly mounting bolts : **4.5 N·m (0.46 kg-m, 40 in-lb)**

2. Connect wiper motor connector. Turn front wiper switch ON to operate wiper motor, and then turn front wiper switch OFF (auto stop).
3. Install connector clips to the wiper frame, and install cowl top cover. Refer to EI-19, "Removal and Installation" .
4. Install front wiper arms and arm caps. Refer to WW-32, "Removal and Installation of Front Wiper Arms, Adjustment of Wiper Arms Stop Location" .

Disassembly and Assembly of Front Wiper Motor and Linkage

NKS000MI

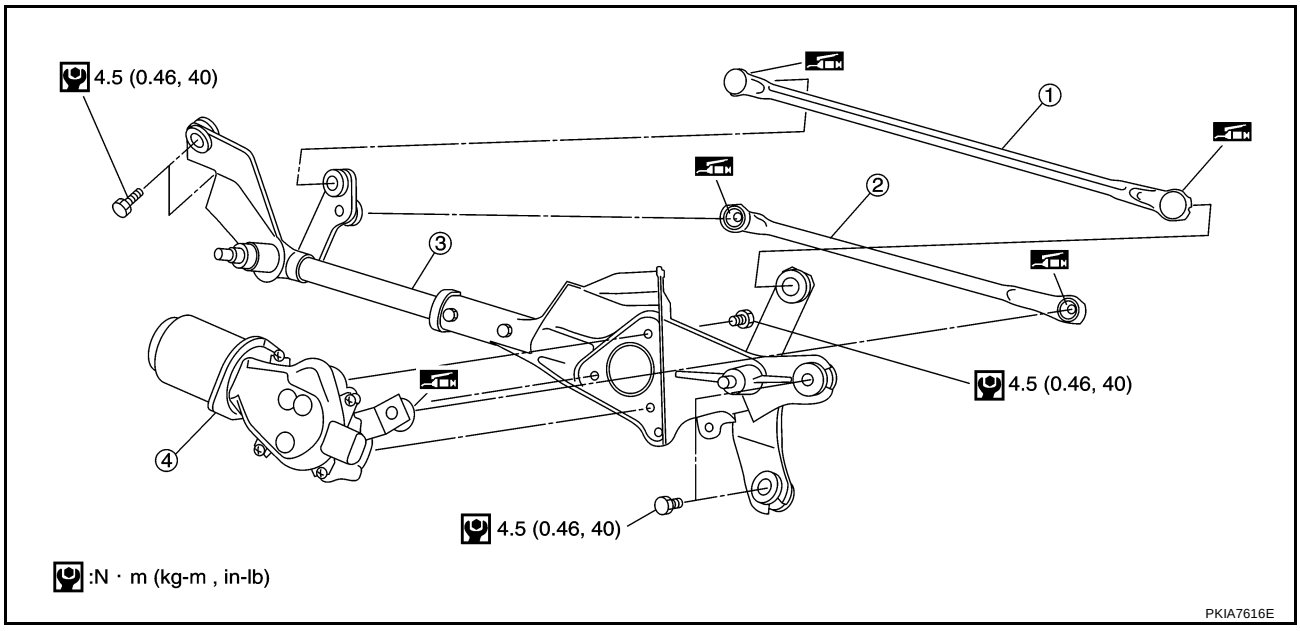

1. Wiper linkage 1
2. Wiper linkage 2
3. Wiper frame
4. Wiper motor

: N-m (kg-m, in-lb)

: Should be lubricated with grease

DISASSEMBLY

1. Remove wiper linkages from wiper motor and wiper frame.
2. Remove wiper motor mounting bolts, and remove wiper motor from wiper frame.

CAUTION:

Be careful not to bend wiper linkages nor to damage the resin part of ball joint when removing wiper linkages.

ASSEMBLY

1. Connect wiper motor connector. Turn front wiper switch ON to operate wiper motor, and then turn front wiper switch OFF (auto stop).
2. Disconnect wiper motor connector.
3. Install wiper motor to wiper frame.

Wiper motor bolts **: 4.5 N·m (0.46 kg-m, 40 in-lb)**

4. Install wiper linkages to wiper frame and wiper motor.

CAUTION:

- **Never drop the wiper motor nor cause it to interfere with other parts.**
- **Check joint of motor arm and wiper linkages (at retainer) for grease conditions. Apply grease if necessary.**

Washer Nozzle Adjustment

NKS000MJ

1. When wiper blade position is in auto stop condition, remove wiper motor connector to ensure wiper arms do not move.
2. Adjust each nozzle position (A, B, E, F, and G) so that spray positions are in the range of shaded parts.

CAUTION:
Only washer nozzles (A, B, E, F, and G) can be adjusted. Washer nozzles (C, D, H, I, and J) cannot be adjusted because of fixed nozzles.

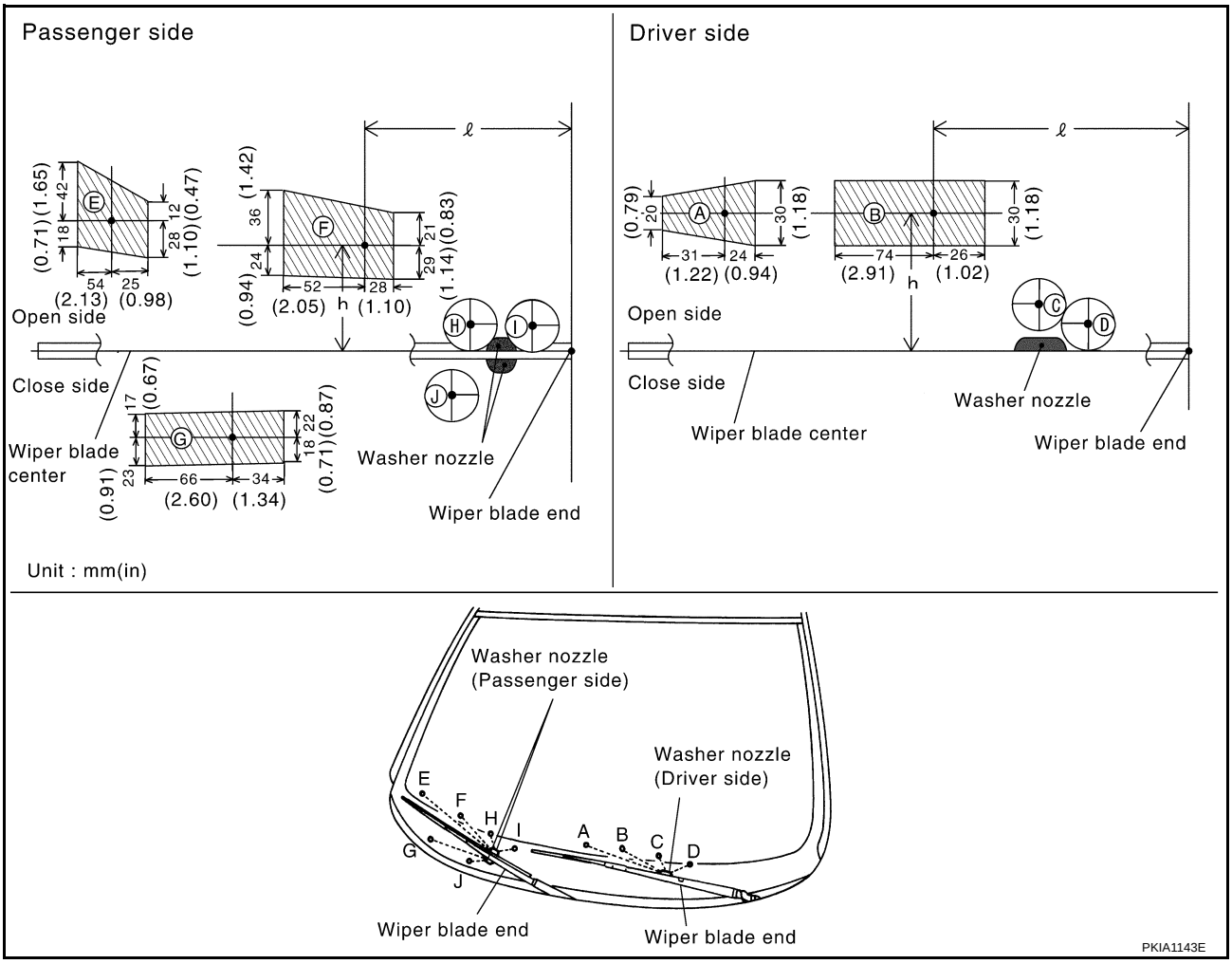

Unit: mm (in)

Spray position	h (height)	ℓ (width)
A	25 (0.98)	339 (13.35)
B	25 (0.98)	176 (6.93)
(C)	—	—
(D)	—	—
E	53 (2.09)	306 (12.05)
F	39 (1.54)	158 (6.22)
G	32 (1.26)	244 (9.61)
(H)	—	—
(I)	—	—
(J)	—	—

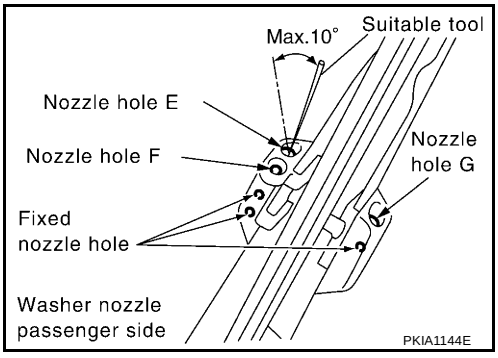

Washer Tube Layout

NKS000MK

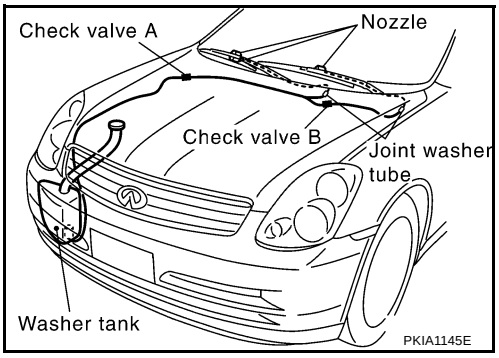

Removal and Installation of Front Washer Nozzle

NKS000ML

Replace wiper arm assembly. Refer to WW-32, "Removal and Installation of Front Wiper Arms, Adjustment of Wiper Arms Stop Location" .

CAUTION:

Removal/installation of the washer nozzle as a unit must not be done.

Removal and Installation of Front Washer Joint

NKS000MM

REMOVAL

1. Remove upwards while pressing the tab on reverse side.
2. Remove washer tube.

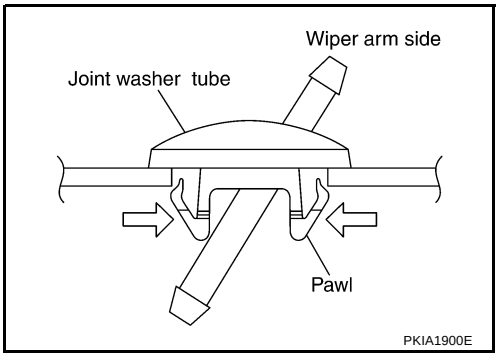

INSTALLATION

Installation is the reverse order of removal.

CHECK VALVE INSPECTION

Blow check valve. Confirm that the air ventilates. Also confirm that inhalation is impossible.

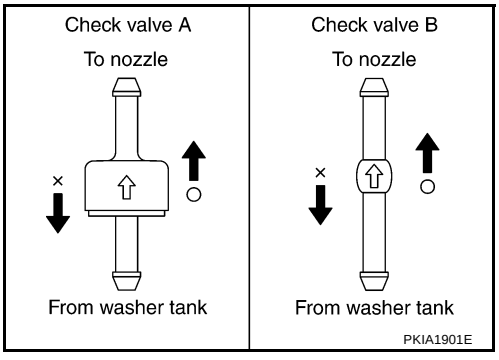

Inspection of Front Wiper and Washer Switch Circuit

NKS004OV

Refer to LT-100, "Combination Switch Inspection" .

Removal and Installation of Front Wiper and Washer Switch

NKS000MO

REMOVAL

1. Remove steering column cover. Refer to IP-10, "INSTRUMENT PANEL ASSEMBLY" .
2. Remove mounting bolts of cluster lid A and combination meter. Refer to IP-10, "INSTRUMENT PANEL ASSEMBLY" .
3. Disconnect wiper and washer switch connector.
4. Pull wiper and washer switch toward the passenger door while pressing pawls in direction shown by the arrow in the figure, and remove it from the base.

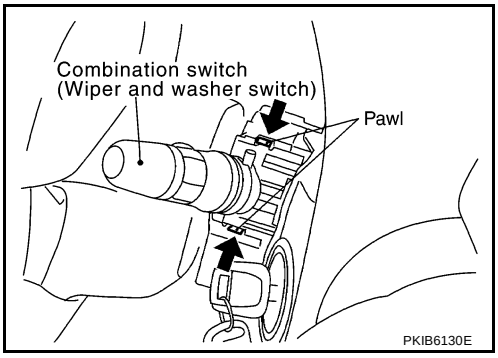

INSTALLATION

Installation is the reverse order of removal.

Removal and Installation of Washer Tank

NKS000MP

REMOVAL

1. Remove clip and pull washer tank inlet out of washer tank.

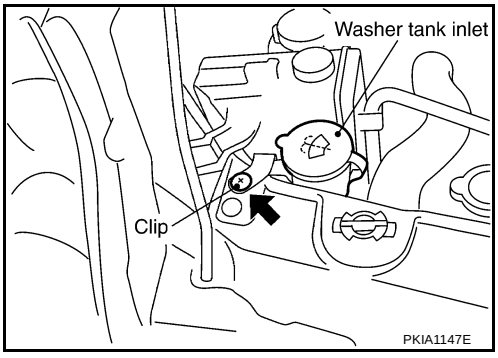

2. Remove fender protector in the right side. Refer to EI-20, "FENDER PROTECTOR" .
3. Remove right half of front bumper fascia. Refer to EI-14, "FRONT BUMPER" .
4. Disconnect washer pump connector.
5. Remove bolts.

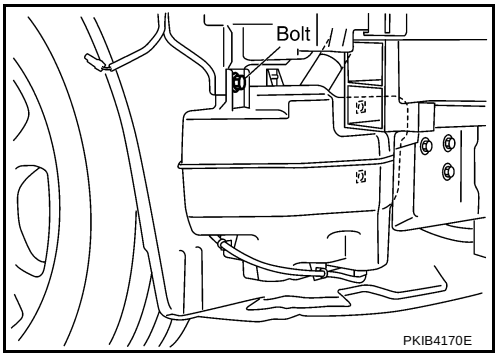

6. Remove washer tube, and remove washer tank from the vehicle.

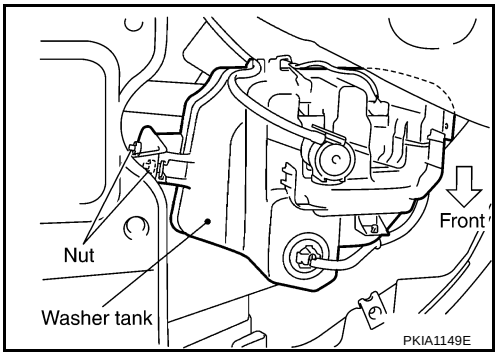

INSTALLATION

Installation is the reverse order of removal.

CAUTION:

After installation, add water up to the upper level of the washer tank inlet, and check for water leaks.

Washer tank installation bolt and nuts : 5.7 N·m (0.58 kg-m, 50 in-lb)

Removal and Installation of Front Washer Pump

NKS000MQ

REMOVAL

1. Remove fender protector in the right side. Refer to EI-20, "FENDER PROTECTOR" .
2. Disconnect front washer pump connector and remove washer tube.
3. Pull out front washer pump in direction shown by the arrow in the figure. Remove front washer pump from washer tank.

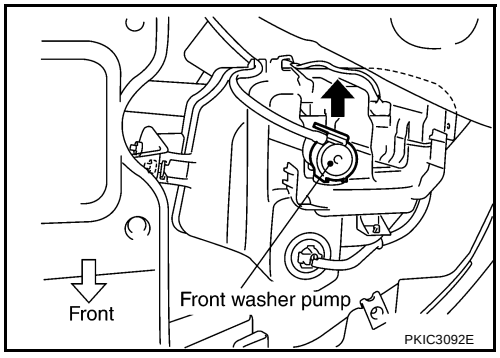

INSTALLATION

Installation is the reverse order of removal.

CAUTION:

When installing front washer pump, there should be no packing twists, etc.

CIGARETTE LIGHTER

PFP:35330

Wiring Diagram — CIGAR —
WITH A/T

NKS000MR

WW-CIGAR-01

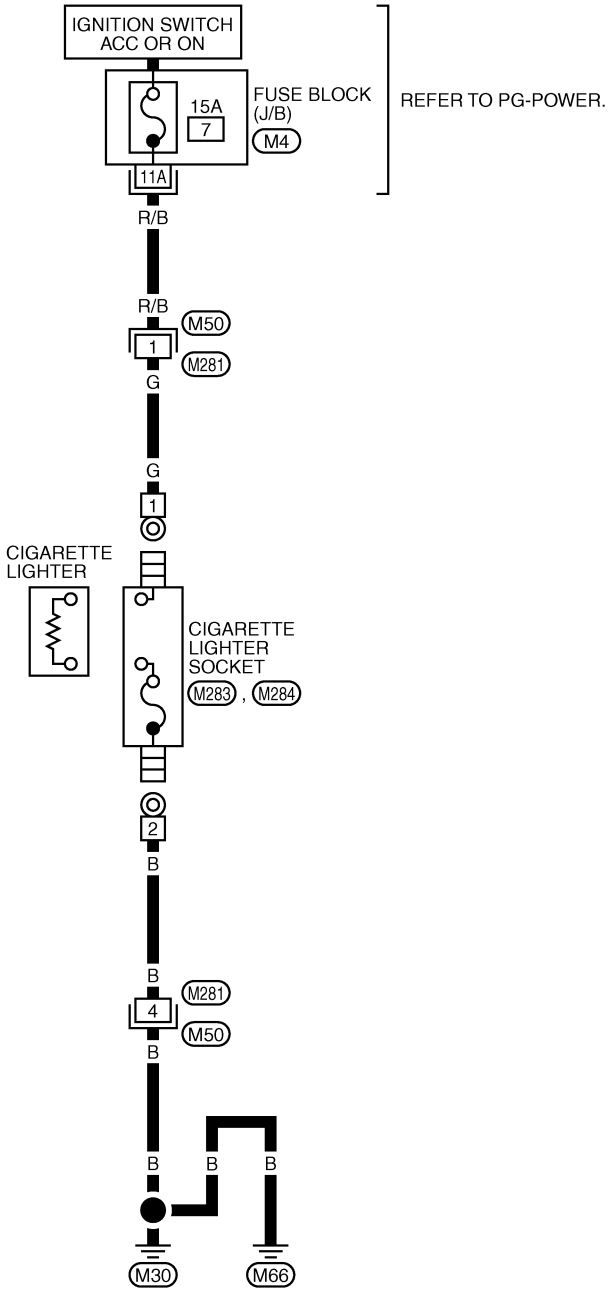

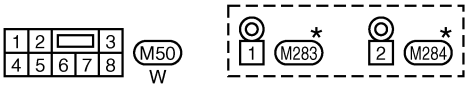

★: THIS CONNECTOR IS NOT SHOWN IN "HARNESS LAYOUT", PG SECTION.

REFER TO THE FOLLOWING.

M4 -FUSE BLOCK-JUNCTION BOX (J/B)

TKWM2108E

WITH M/T

WW-CIGAR-02

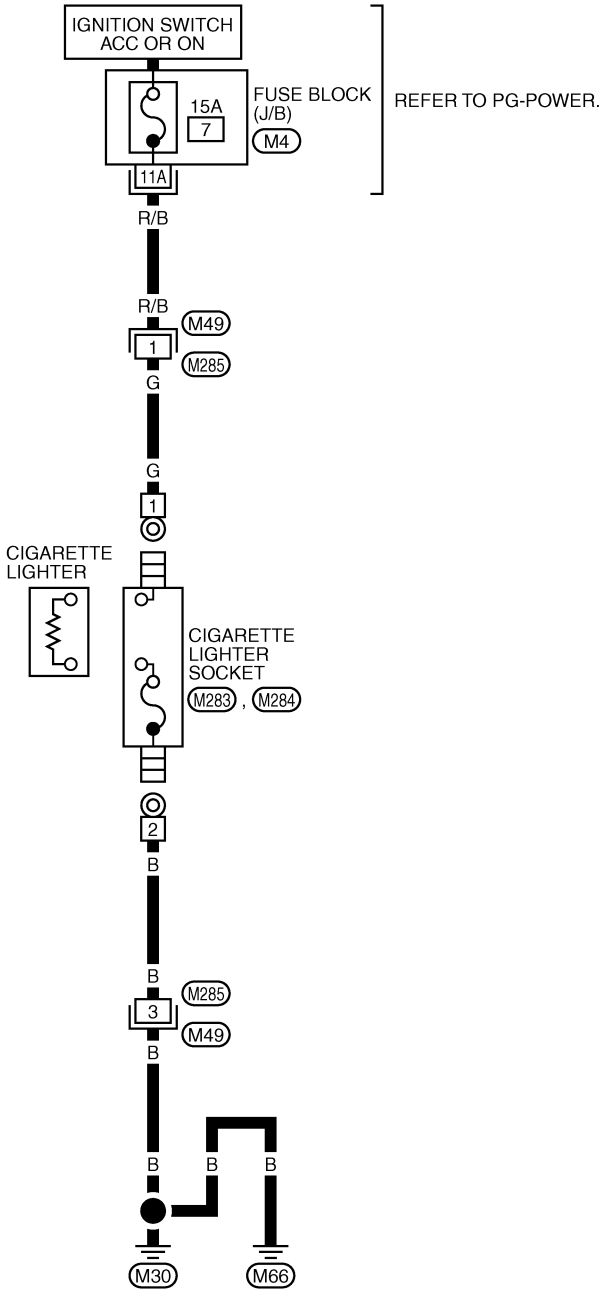

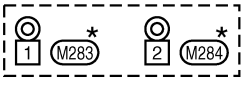

*: THIS CONNECTOR IS NOT SHOWN IN "HARNESS LAYOUT", PG SECTION.

REFER TO THE FOLLOWING.

M4 -FUSE BLOCK-JUNCTION BOX (J/B)

TKWM2948E

Removal and Installation

NKS00540

REMOVAL

1. Remove console finisher. Refer to IP-10, "INSTRUMENT PANEL ASSEMBLY" .
2. Remove screws (A) from reverse side cigarette lighter socket.

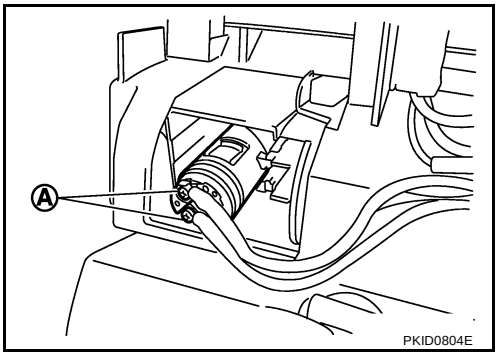

3. Pull out the cigarette lighter.
4. Insert a thin screwdriver between the cigarette lighter socket and cigarette lighter ring. When pry out the cigarette lighter socket.

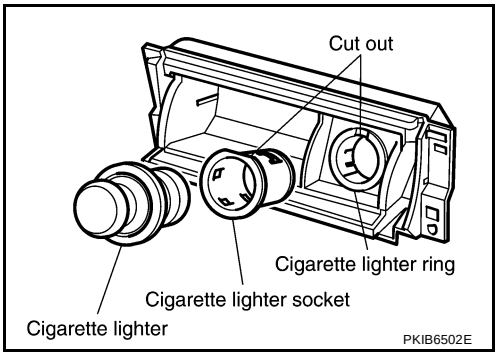

INSTALLATION

Installation is the reverse order of removal.

NOTE:

Install the cigarette lighter socket with its cut out aligned with that on the cigarette lighter ring.

POWER SOCKET

PFP:253A2

Wiring Diagram — P/SCKT —

NKS000MT

WW-P/SCKT-01

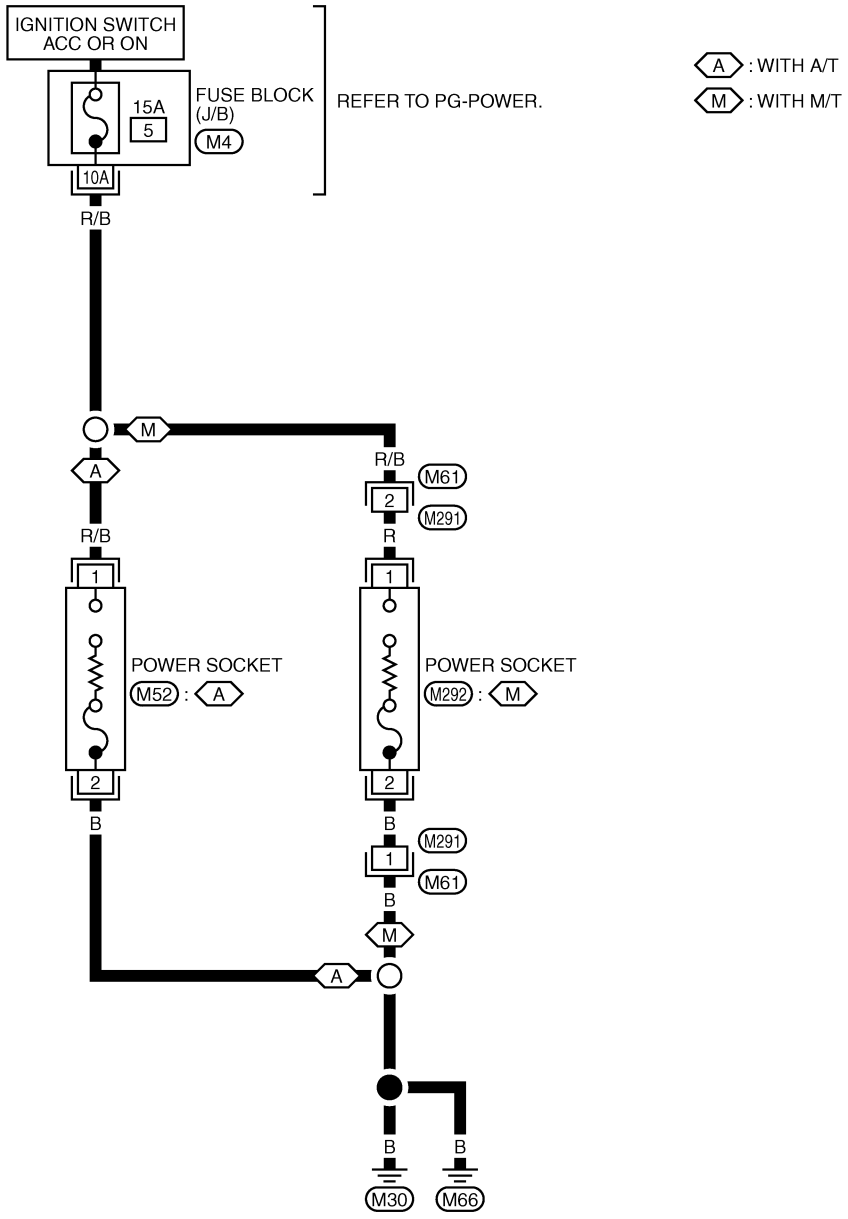

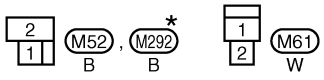

REFER TO THE FOLLOWING.
M4 -FUSE BLOCK-JUNCTION BOX (J/B)

★: THIS CONNECTOR IS NOT SHOWN IN "HARNESS LAYOUT", PG SECTION.

TKWM2929E

Removal and Installation of Console Power Socket

NKS000MU

REMOVAL

1. Remove the console box assembly. Refer to IP-10, "INSTRUMENT PANEL ASSEMBLY" .
2. Disconnect power socket connector.
3. Remove inner socket from the ring, while pressing the hook on the ring out from square hole.
4. Remove ring from console box while pressing pawls.

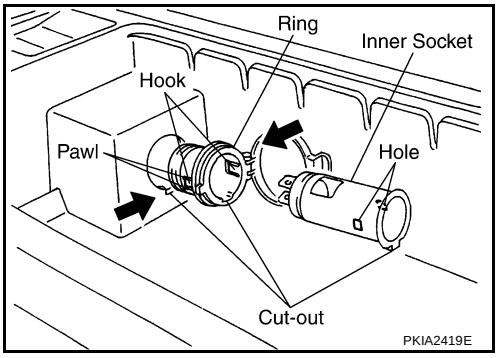

INSTALLATION

Installation is the reverse order of removal.

HORN

PFP:25610

Wiring Diagram — HORN —

NKS000MV

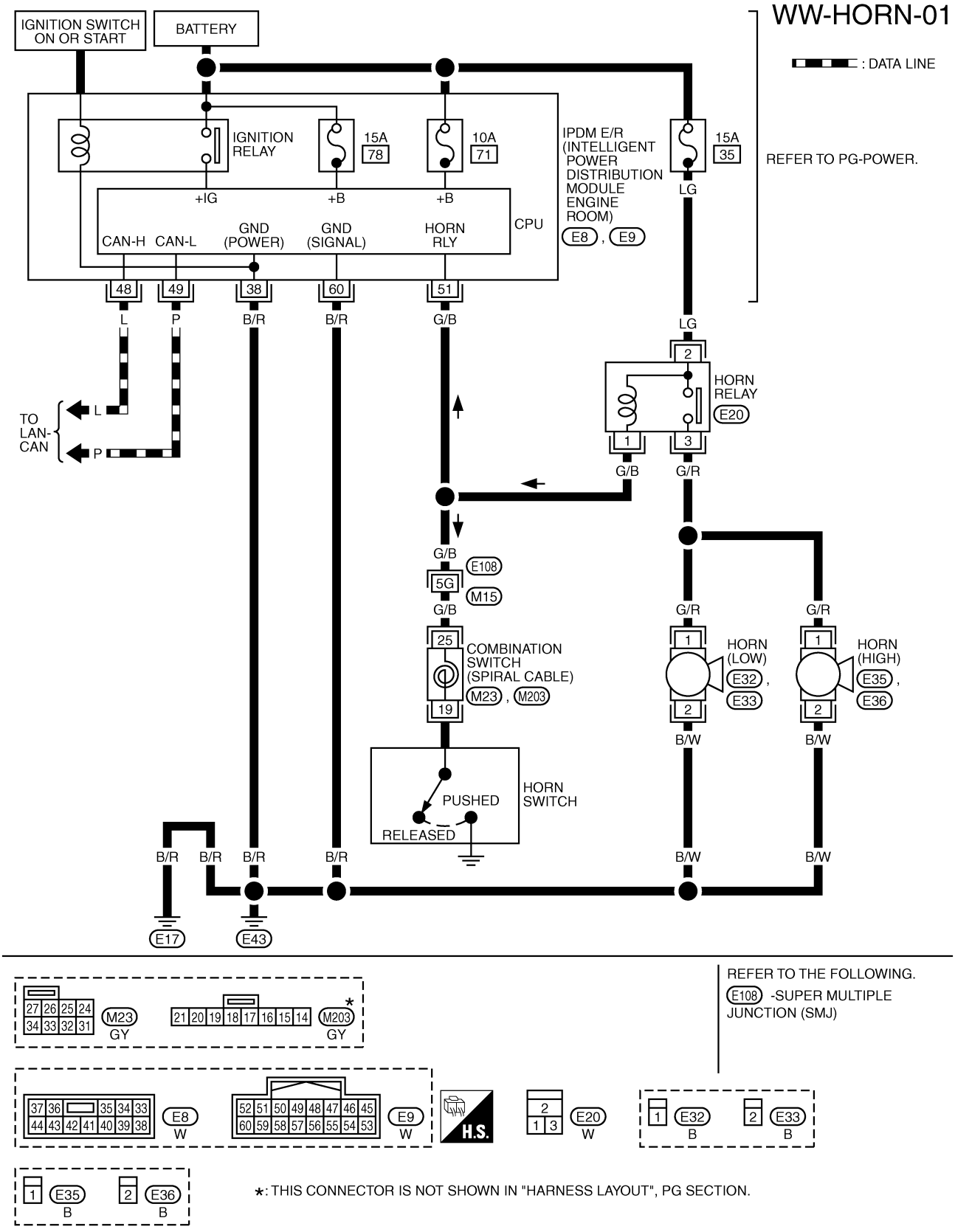

Removal and Installation

NKS000MW

REMOVAL

1. Remove front grille. Refer to EI-18, "Removal and Installation" .
2. Disconnect all horn connectors.
3. Remove horn mounting bolt and remove horn from vehicle.

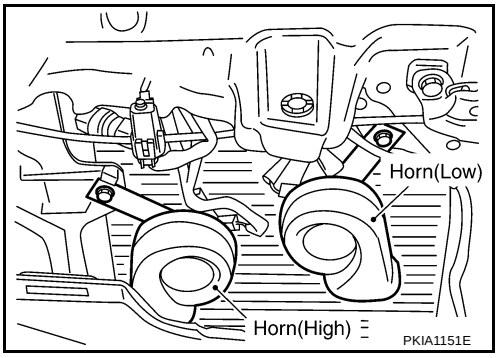

INSTALLATION

Installation is the reverse order of removal.

- Tighten horn bolt to specified torque.

Horn mounting bolt **: 5.7 N·m (0.58 kg-m, 50 in-lb.)**