SECTION PG

POWER SUPPLY, GROUND & CIRCUIT ELEMENTS

CONTENTS

POWER SUPPLY ROUTING CIRCUIT

PFP:24110

Schematic

NKS000Q9

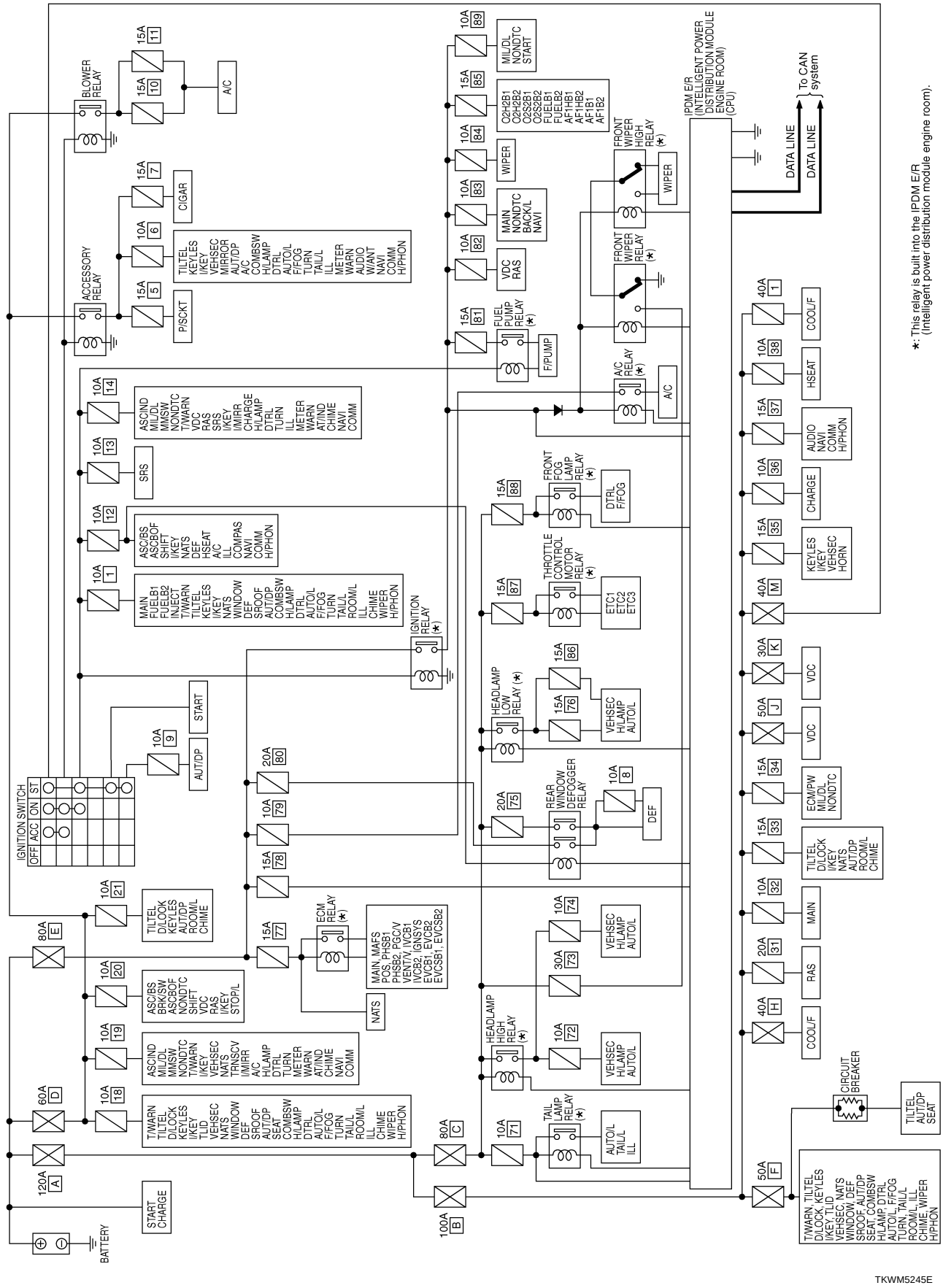

TKWM5245E

Wiring Diagram — POWER —

NKS000QA

BATTERY POWER SUPPLY — IGNITION SW. IN ANY POSITION

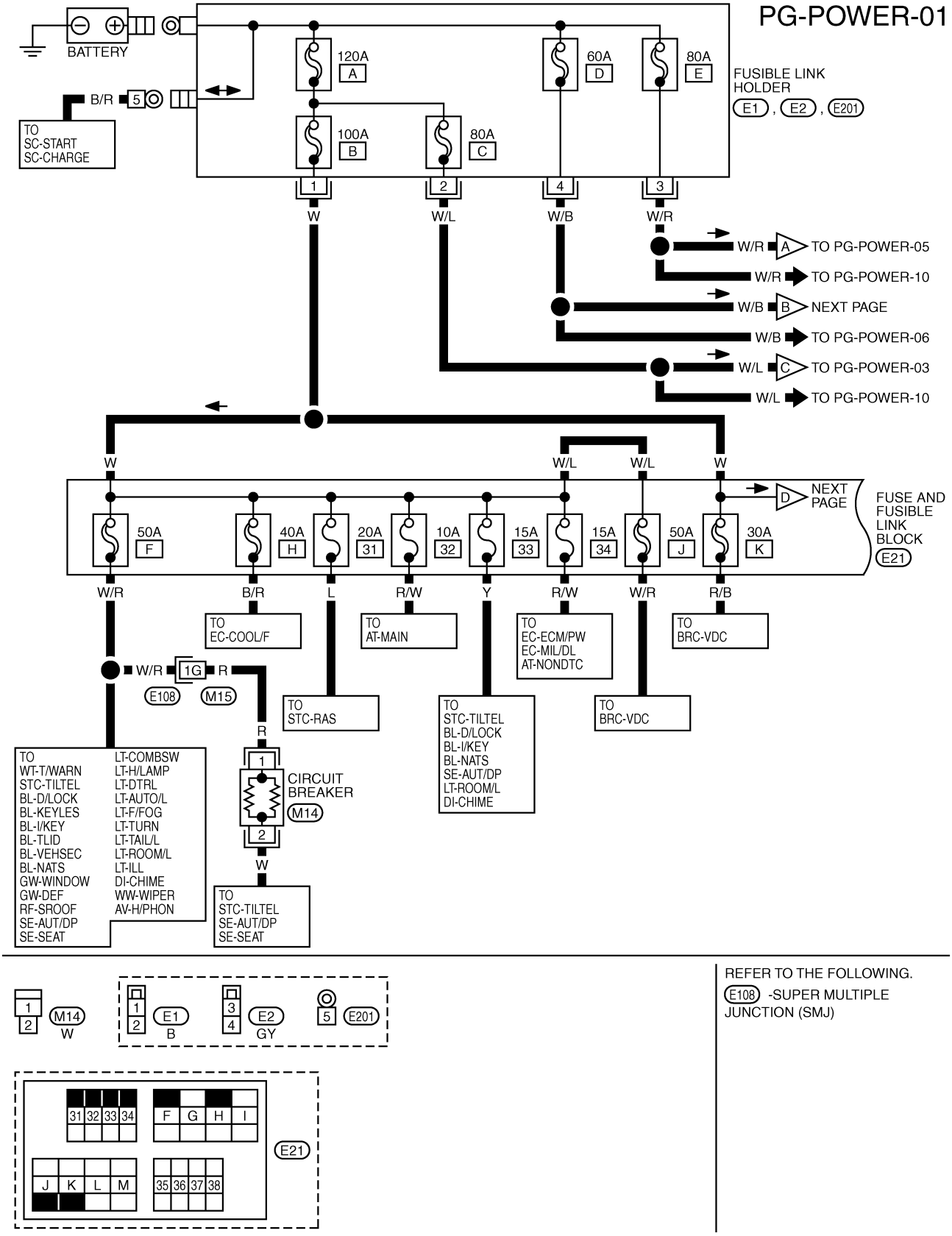

PG-POWER-02

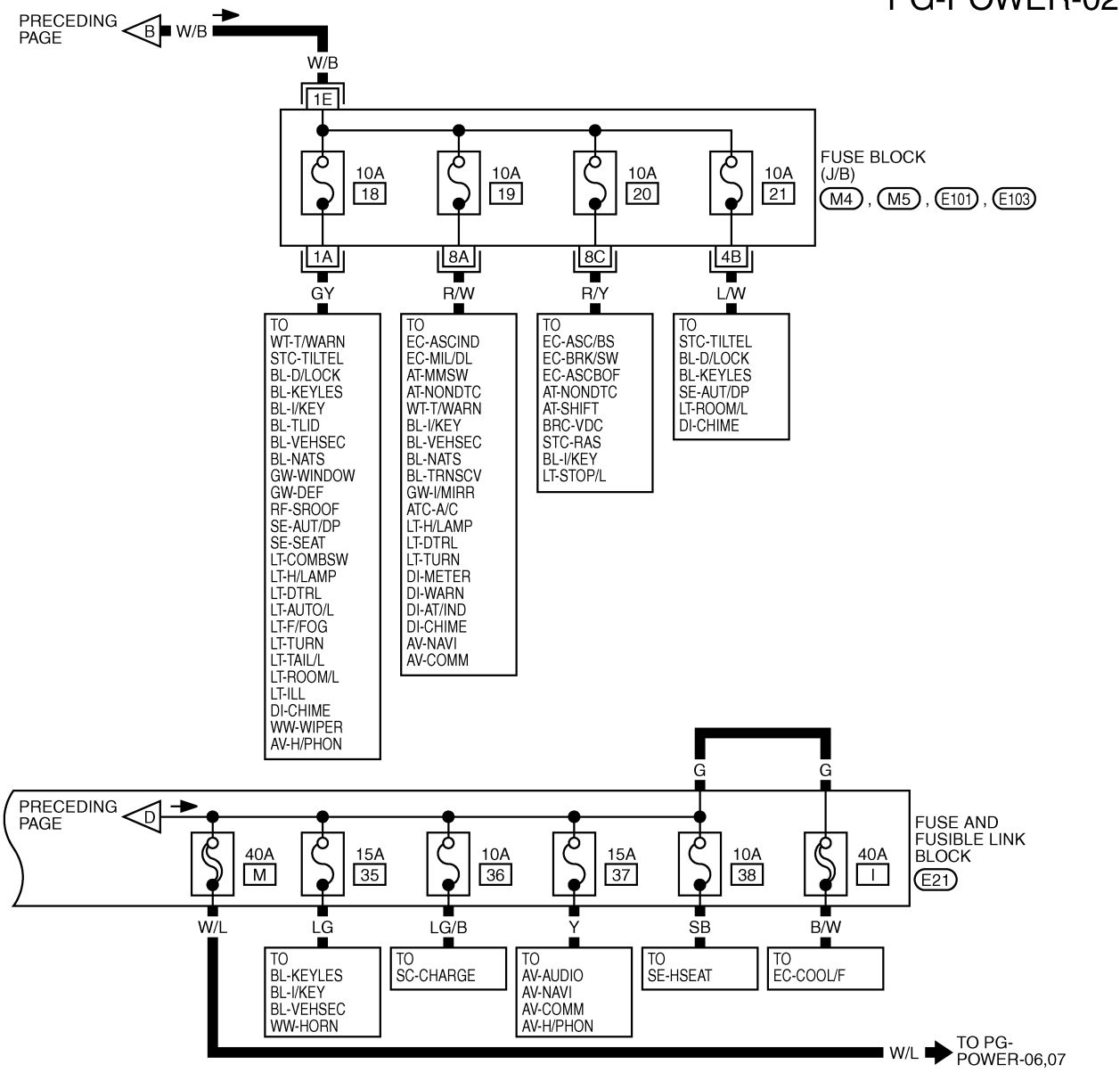

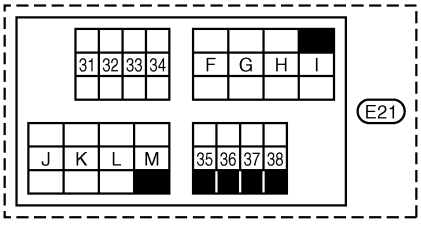

REFER TO THE FOLLOWING.

M4, M5, E101, E103
-FUSE BLOCK-JUNCTION BOX (J/B)

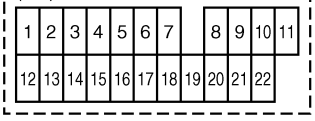

TKWM3525E

PG-POWER-03

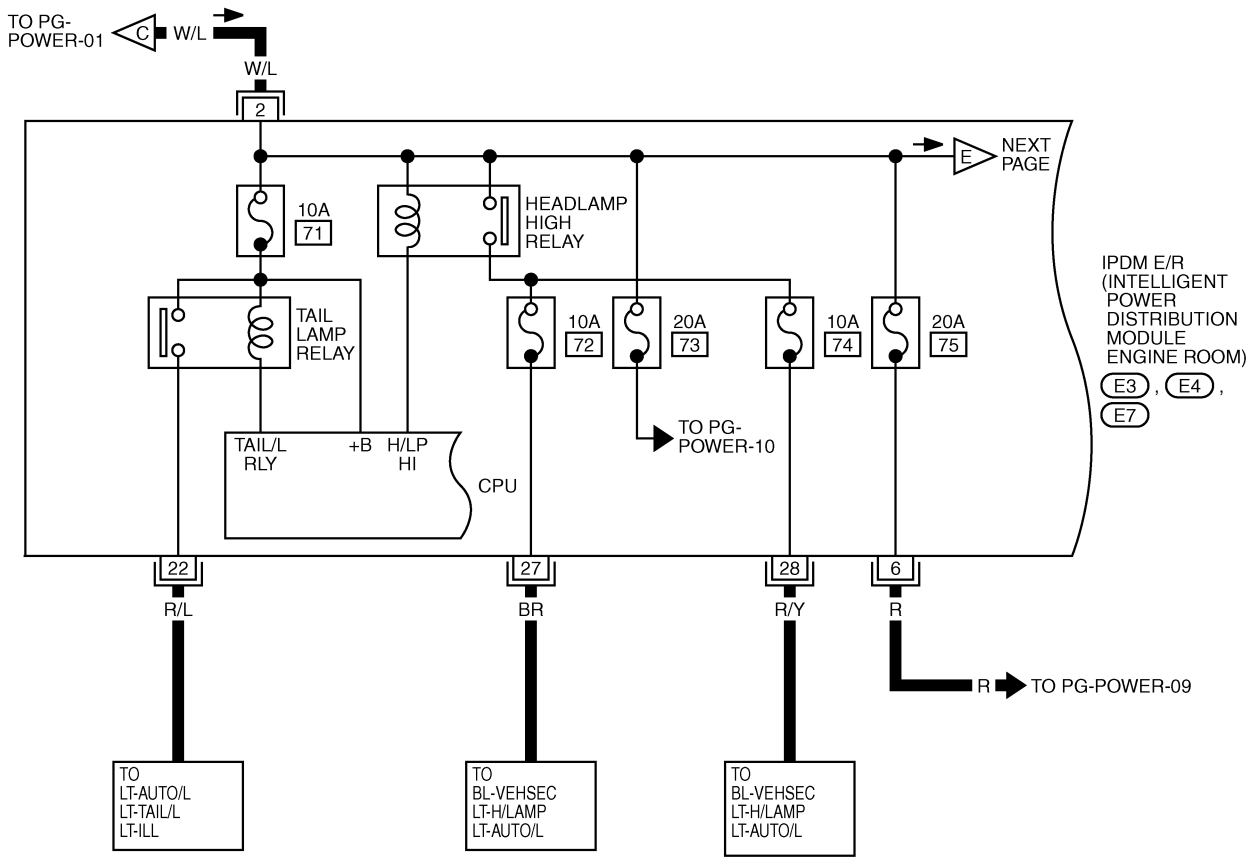

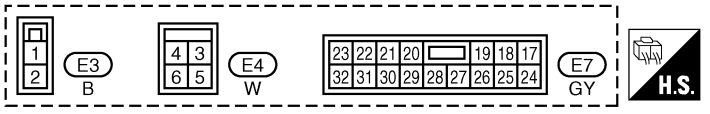

TKWM4019E

PG-POWER-04

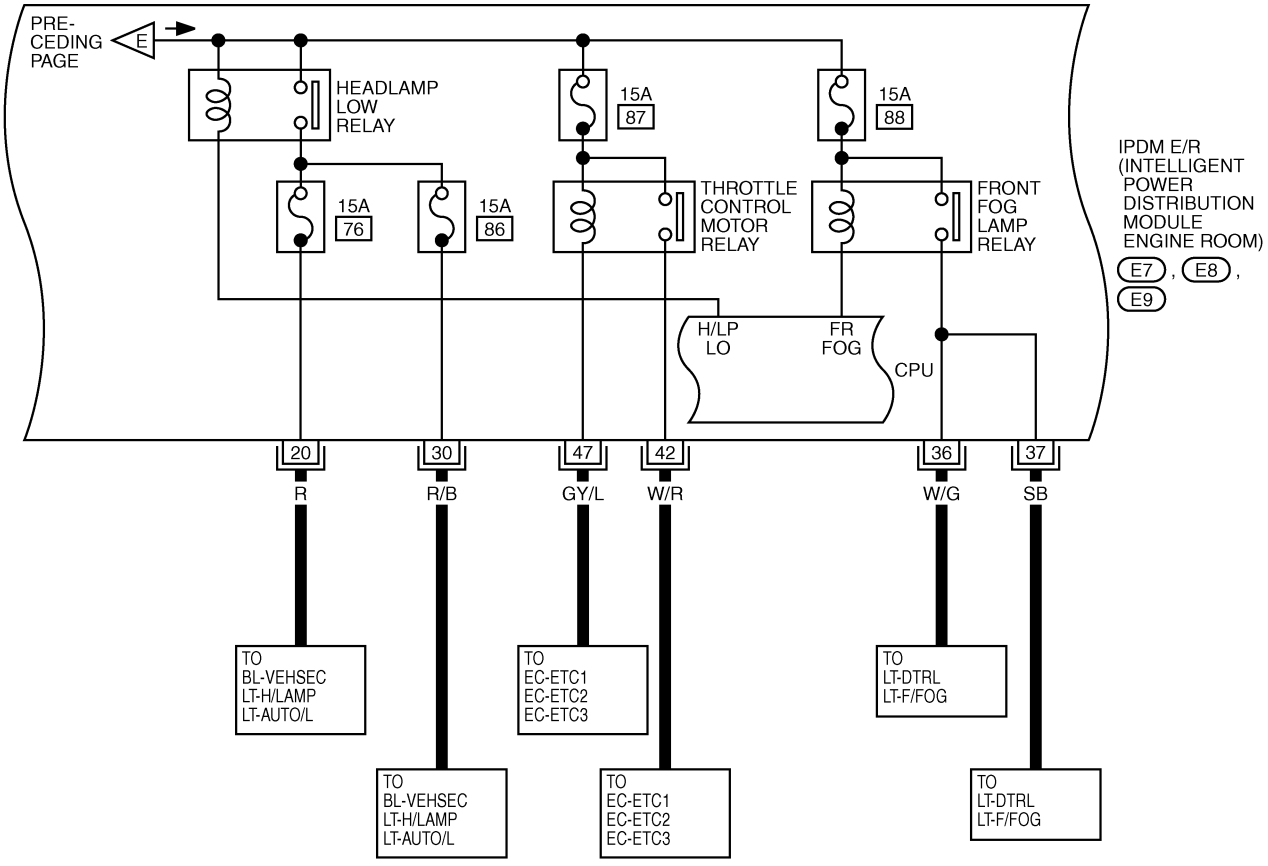

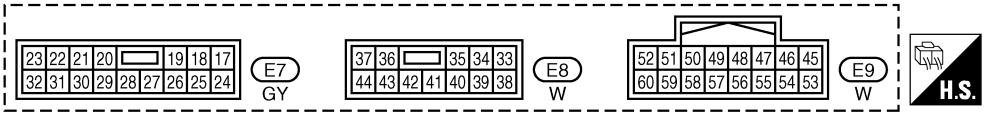

TKWM4996E

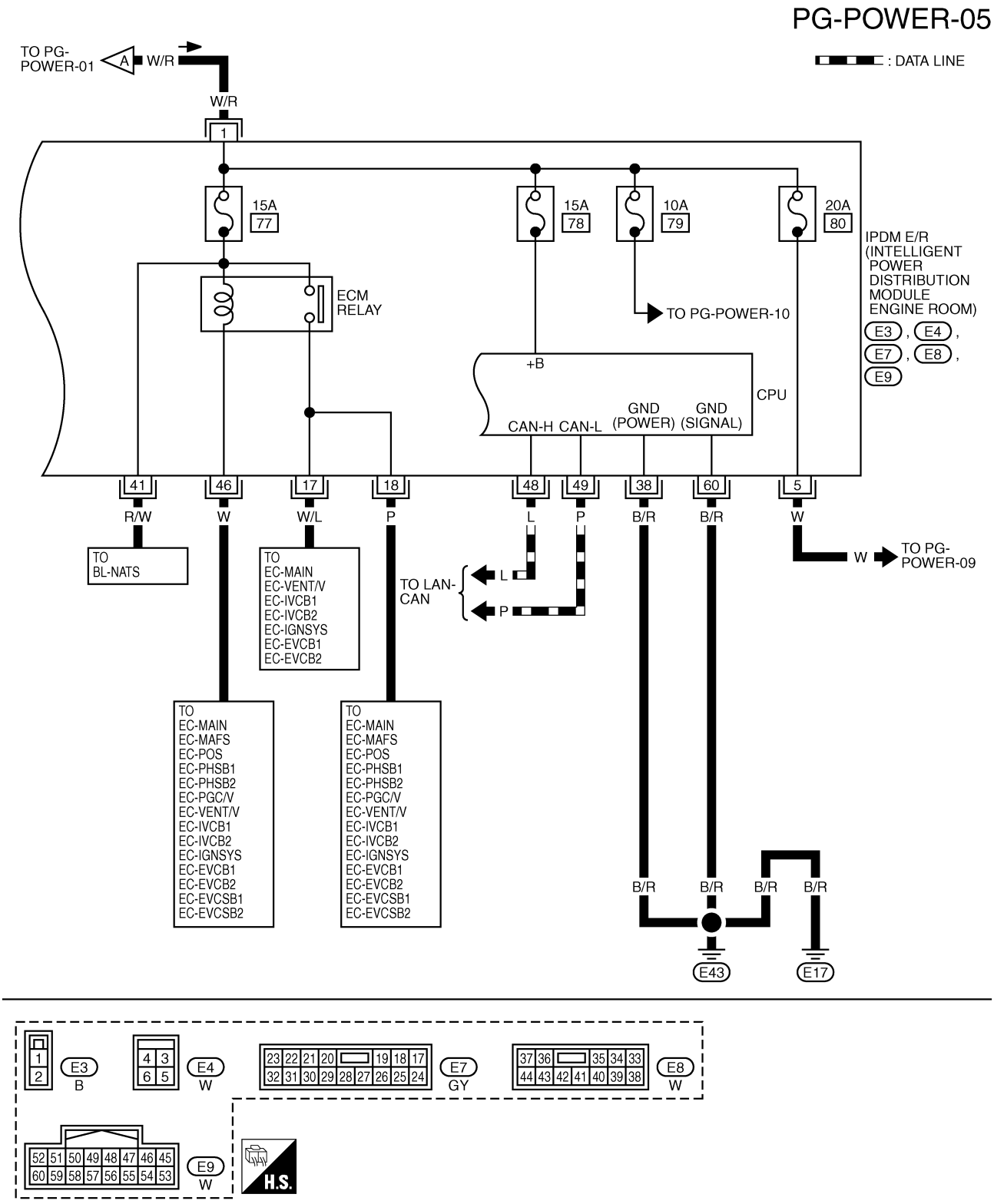
PG-POWER-05
TO PG-POWER-01
A
W/R
: DATA LINE
W/R
1
15A
77
15A
78
10A
79
20A
80
IPDM E/R
(INTELLIGENT POWER DISTRIBUTION MODULE ENGINE ROOM)
E3 , E4 ,
E7 , E8 ,
E9
ECM RELAY
TO PG-POWER-10
+B
CPU
CAN-H CAN-L
GND (POWER)
GND (SIGNAL)
41
46
17
18
48
49
38
60
5
R/W
W
W/L
P
L
P
B/R
B/R
W
TO BL-NATS
TO EC-MAIN EC-VENT/V EC-IVCB1 EC-IVCB2 EC-IGNSYS EC-EVCB1 EC-EVCB2
TO LAN-CAN
L
P
W
TO PG-POWER-09
TO EC-MAIN EC-MAFS EC-POS EC-PHSB1 EC-PHSB2 EC-PGC/V EC-VENT/V EC-IVCB1 EC-IVCB2 EC-IGNSYS EC-EVCB1 EC-EVCB2 EC-EVCSB1 EC-EVCSB2
TO EC-MAIN EC-MAFS EC-POS EC-PHSB1 EC-PHSB2 EC-PGC/V EC-VENT/V EC-IVCB1 EC-IVCB2 EC-IGNSYS EC-EVCB1 EC-EVCB2 EC-EVCSB1 EC-EVCSB2
B/R
B/R
B/R
B/R
E43
E17
E3
B
E4
W
E7
GY
E8
W
E9
W
H.S.

TKWM2173E

ACCESSORY POWER SUPPLY — IGNITION SW. IN “ACC” OR “ON”

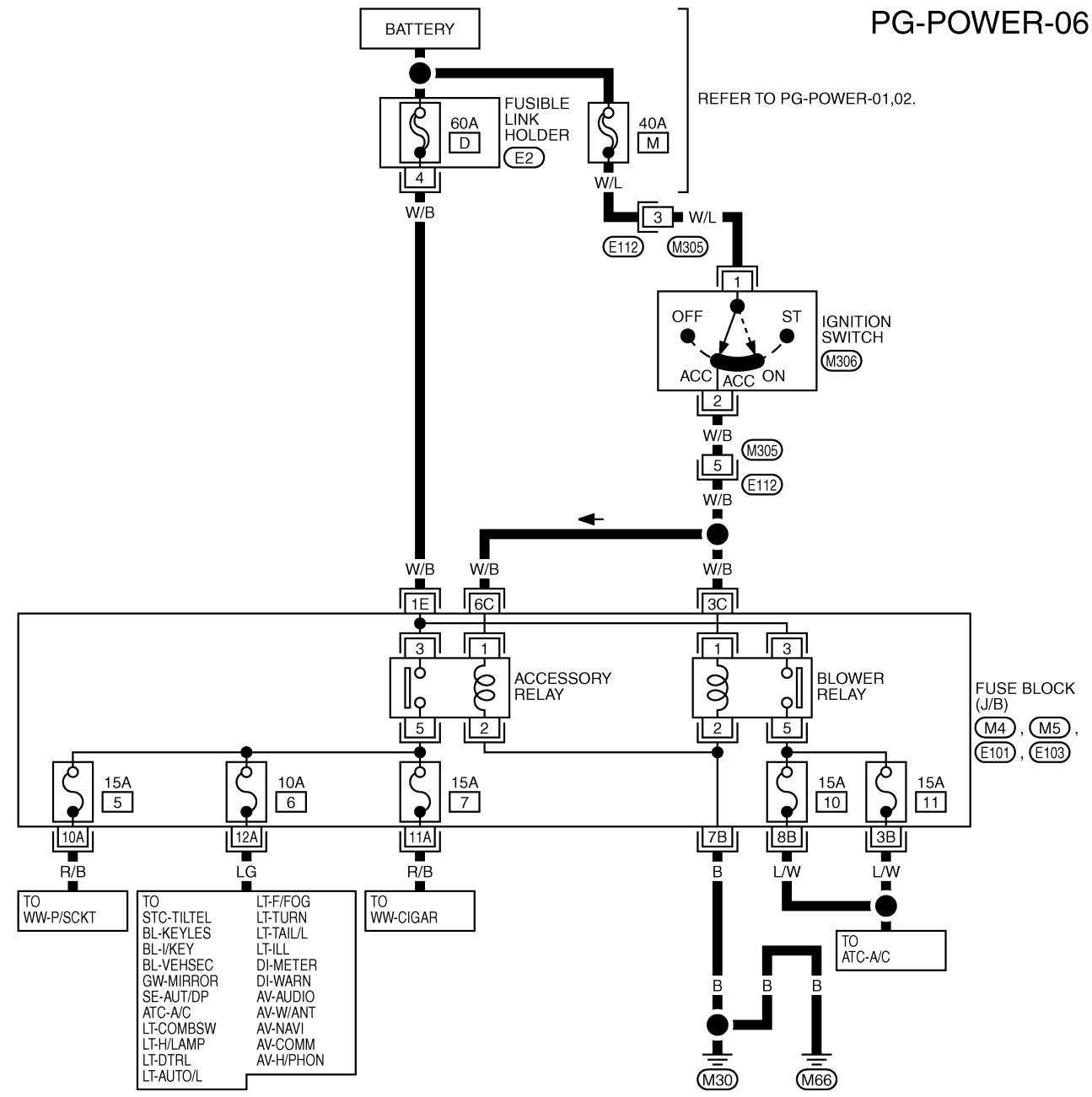

TKWM3527E

IGNITION POWER SUPPLY — IGNITION SW. IN “ON” AND/OR “START”

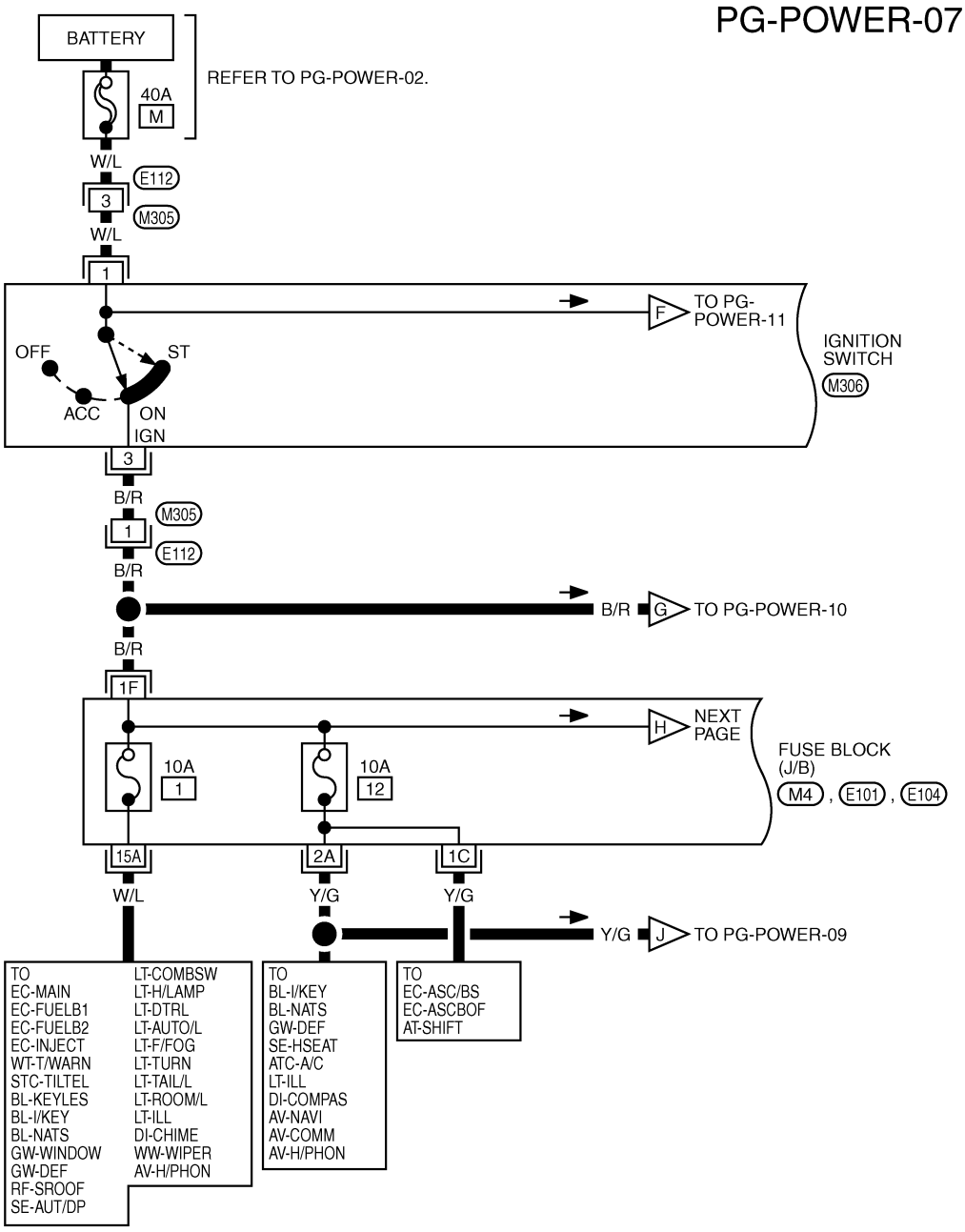

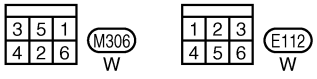

REFER TO THE FOLLOWING.

M4 , E101 , E104
-FUSE BLOCK-JUNCTION BOX (J/B)

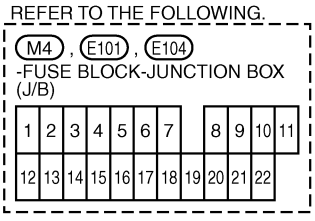

TKWM3528E

PG-POWER-08

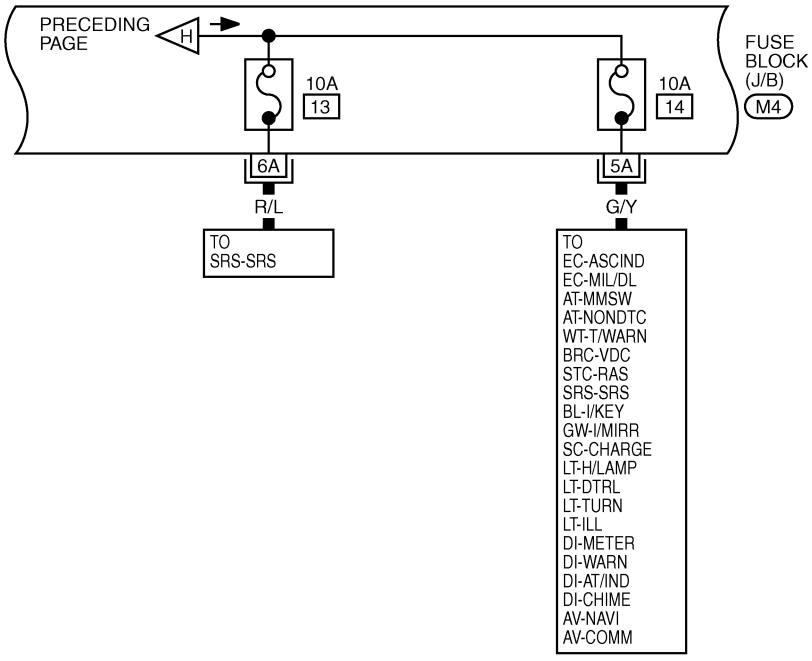

REFER TO THE FOLLOWING.

M4 -FUSE BLOCK-JUNCTION BOX (J/B)

1	2	3	4	5	6	7		8	9	10	11
12	13	14	15	16	17	18	19	20	21	22	

TKWM3529E

PG-POWER-09

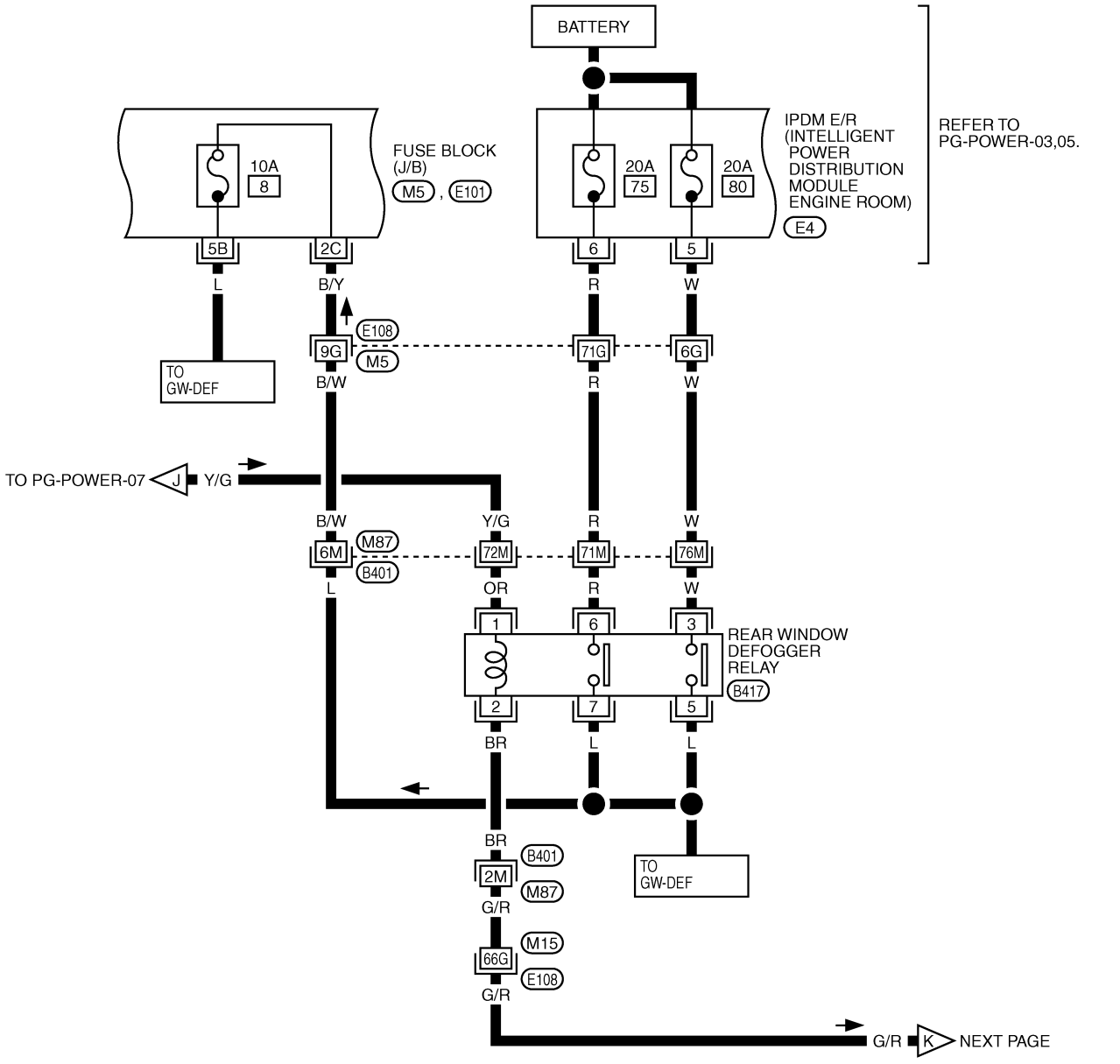

REFER TO THE FOLLOWING.

E108 , B401 -SUPER MULTIPLE JUNCTION (SMJ)

M5 , E101 -FUSE BLOCK-JUNCTION BOX (J/B)

1	2	3	4	5	6	7	8	9	10	11
12	13	14	15	16	17	18	19	20	21	22

TKWM2177E

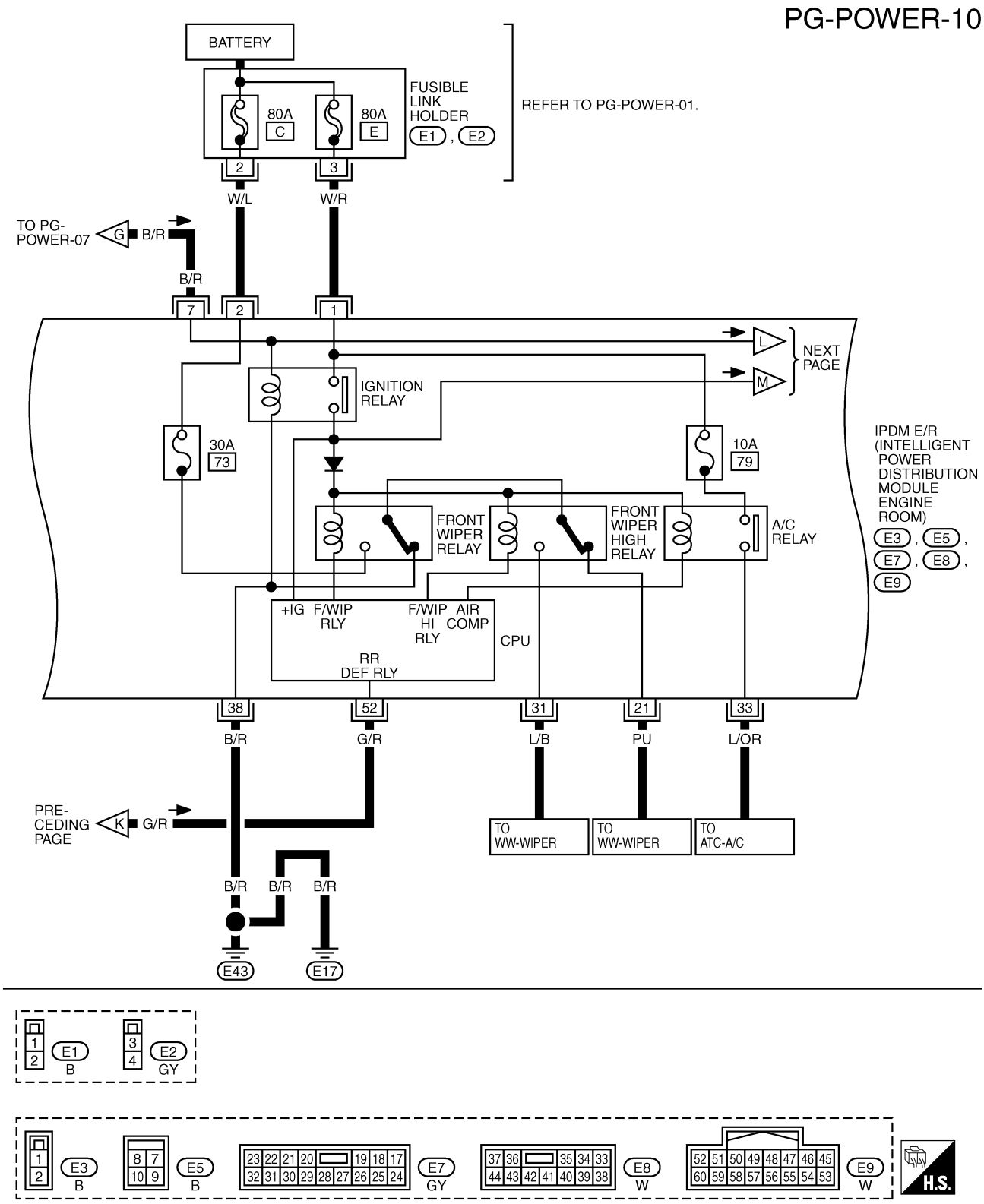
PG-POWER-10
BATTERY
FUSIBLE LINK HOLDER
E1 , E2
80A C
80A E
REFER TO PG-POWER-01.
2
3
W/L
W/R
TO PG-POWER-07
G
B/R
B/R
7
2
1
L
M
NEXT PAGE
IGNITION RELAY
30A 73
10A 79
IPDM E/R (INTELLIGENT POWER DISTRIBUTION MODULE ENGINE ROOM)
E3 , E5 , E7 , E8 , E9
FRONT WIPER RELAY
FRONT WIPER HIGH RELAY
A/C RELAY
+IG F/WIP RLY
F/WIP HI RLY
AIR COMP
CPU
RR DEF RLY
38
52
31
21
33
B/R
G/R
L/B
PU
L/OR
PRE-CEDING PAGE
K
G/R
TO WW-WIPER
TO WW-WIPER
TO ATC-A/C
B/R
B/R
B/R
E43
E17
E1 B
E2 GY
E3 B
E5 B
E7 GY
E8 W
E9 W
H.S.
TKWM5246E

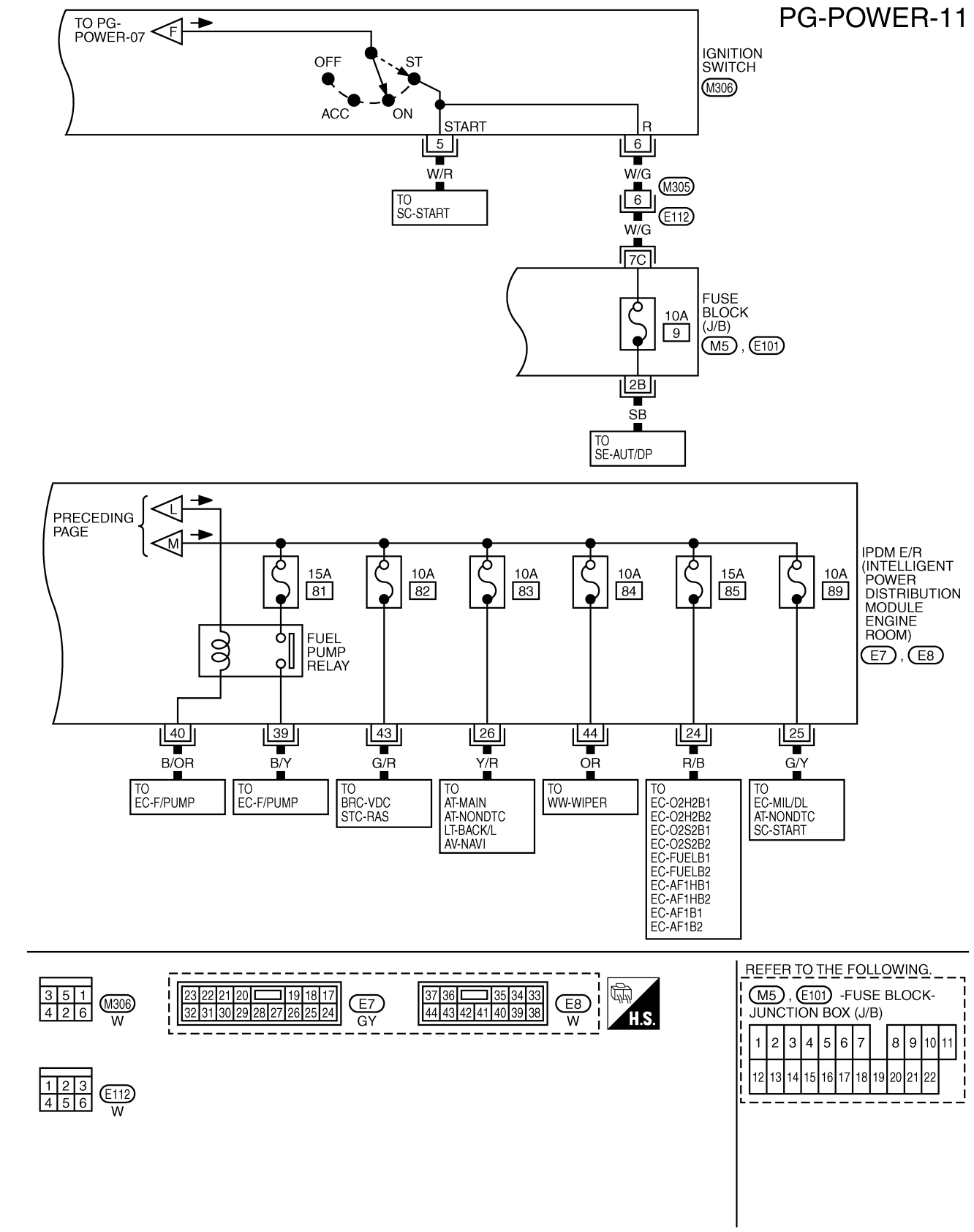
PG-POWER-11
TO PG-POWER-07
F
OFF
ST
ACC
ON
IGNITION SWITCH
M306
START
R
5
6
W/R
W/G
TO SC-START
M305
6
E112
W/G
7C
FUSE BLOCK (J/B)
10A
9
M5 , E101
2B
SB
TO SE-AUT/DP
PRECEDING PAGE
L
M
15A 81
10A 82
10A 83
10A 84
15A 85
10A 89
IPDM E/R (INTELLIGENT POWER DISTRIBUTION MODULE ENGINE ROOM)
E7 , E8
FUEL PUMP RELAY
40
39
43
26
44
24
25
B/OR
B/Y
G/R
Y/R
OR
R/B
G/Y
TO EC-F/PUMP
TO EC-F/PUMP
TO BRC-VDC STC-RAS
TO AT-MAIN AT-NONDTC LT-BACK/L AV-NAVI
TO WW-WIPER
TO EC-O2H2B1 EC-O2H2B2 EC-O2S2B1 EC-O2S2B2 EC-FUELB1 EC-FUELB2 EC-AF1HB1 EC-AF1HB2 EC-AF1B1 EC-AF1B2
TO EC-MIL/DL AT-NONDTC SC-START
3 5 1 4 2 6
M306
W
23 22 21 20 19 18 17 32 31 30 29 28 27 26 25 24
E7
GY
37 36 35 34 33 44 43 42 41 40 39 38
E8
W
H.S.
1 2 3 4 5 6
E112
W
REFER TO THE FOLLOWING.
M5 , E101 -FUSE BLOCK-JUNCTION BOX (J/B)
1 2 3 4 5 6 7 8 9 10 11 12 13 14 15 16 17 18 19 20 21 22
TKWM3530E

Fuse

NKS000QB

- If fuse is blown, be sure to eliminate cause of malfunction before installing new fuse.
- Use fuse of specified rating. Never use fuse of more than specified rating.
- Do not partially install fuse; always insert it into fuse holder properly.
- Remove fuse for “ELECTRICAL PARTS (BAT)” if vehicle is not used for a long period of time.

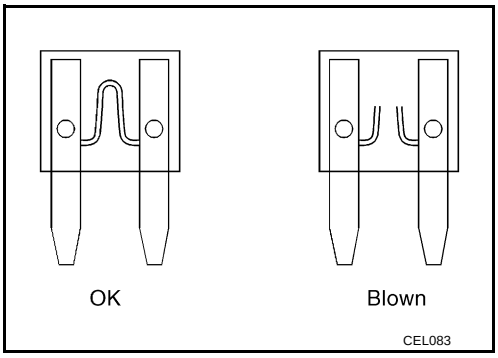

Fusible Link

NKS000QC

A melted fusible link can be detected either by visual inspection or by feeling with finger tip. If its condition is questionable, use circuit tester or test lamp.

CAUTION:

- **If fusible link should melt, it is possible that critical circuit (power supply or large current carrying circuit) is shorted. In such a case, carefully check and eliminate cause of malfunction.**
- **Never wrap outside of fusible link with vinyl tape. Important: Never let fusible link touch any other wiring harness, vinyl or rubber parts.**

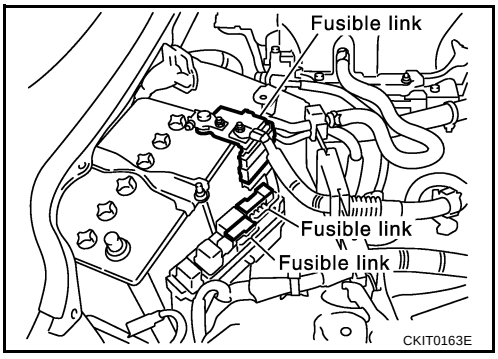

Circuit Breaker

NKS000QD

The PTC thermistor generates heat in response to current flow. The temperature (and resistance) of the thermistor element varies with current flow. Excessive current flow will cause the element's temperature to rise. When the temperature reaches a specified level, the electrical resistance will rise sharply to control the circuit current. Reduced current flow will cause the element to cool. Resistance falls accordingly and normal circuit current flow is allowed to resume.

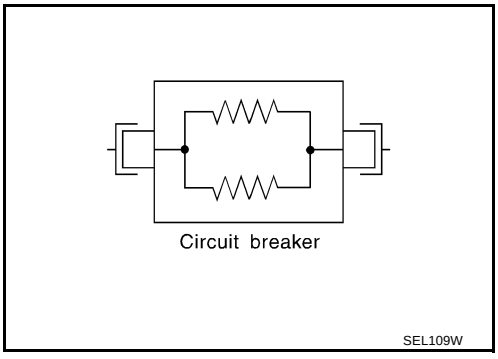

IPDM E/R (INTELLIGENT POWER DISTRIBUTION MODULE ENGINE ROOM)

PFP:284B7

System Description

NKS000QE

- IPDM E/R (Intelligent Power Distribution Module Engine Room) integrates the relay box and fuse block which were originally placed in engine compartment. It controls integrated relay via IPDM E/R control circuit.
- IPDM E/R-integrated control circuit performs ON-OFF operation of relay, CAN communication control, oil pressure switch signal and hood switch signal reception, etc.
- It controls operation of each electrical part via ECM, BCM and CAN communication lines.

CAUTION:

None of the IPDM E/R-integrated relays can be removed.

SYSTEMS CONTROLLED BY IPDM E/R

1. Lamp control
   Using CAN communication line, it receives signal from BCM and controls the following lamps:
   - Headlamps (HI, LO)
   - Parking, license plate, side marker and tail lamps
   - Front fog lamps
2. Wiper control
   Using CAN communication line, it receives signals from BCM and controls the front wiper.
3. Rear window defogger relay control
   Using CAN communication line, it receives signals from BCM and controls the rear window defogger relay.
4. A/C compressor control
   Using CAN communication line, it receives signals from ECM and controls the A/C compressor.
5. Cooling fan control
   Using CAN communication line, it receives signals from ECM and controls cooling fan.
6. Horn control
   Using CAN communication line, it receives signals from BCM and controls horn relay.

CAN COMMUNICATION LINE CONTROL

With CAN communication, by connecting each control unit using two communication lines (CAN L-line, CAN H-line), it is possible to transmit maximum amount of information with minimum wiring. Each control unit can transmit and receive data, and reads necessary information only.

1. Fail-safe control
   - When CAN communication with other control units is impossible, IPDM E/R performs fail-safe control. After CAN communication recovers normally, it also returns to normal control.
   - Operation of control parts by IPDM E/R during fail-safe mode is as follows:

Controlled system	Fail-safe mode
Headlamp	● With the ignition switch ON, the headlamp (low) is ON. ● With the ignition switch OFF, the headlamp (low) is OFF.
Parking, license plate, side marker and tail lamps	● With the ignition switch ON, the parking, license plate, side marker and tail lamps is ON. ● With the ignition switch OFF, the parking, license plate, side marker and tail lamps is OFF.
Cooling fan	● With the ignition switch ON, the cooling fan HI operates. ● With the ignition switch OFF, the cooling fan stops.
Front wiper	Until the ignition switch is turned off, the front wiper LO and HI remains in the same status it was in just before fail–safe control was initiated.
Rear window defogger	Rear window defogger relay OFF
A/C compressor	A/C compressor OFF
Front fog lamps	Front fog lamp relay OFF

IPDM E/R STATUS CONTROL

In order to save power, IPDM E/R switches status by itself based on each operating condition.

1. CAN communication status
   - CAN communication is normally performed with other control units.
   - Individual unit control by IPDM E/R is normally performed.
   - When sleep request signal is received from BCM, mode is switched to sleep waiting status.
2. Sleep waiting status
   - Process to stop CAN communication is activated.
   - All systems controlled by IPDM E/R are stopped. When 3 seconds have elapsed after CAN communication with other control units is stopped, mode switches to sleep status.
3. Sleep status
   - IPDM E/R operates in low power mode.
   - CAN communication is stopped.
   - When a change in CAN communication line is detected, mode switches to CAN communication status.
   - When a change hood switch or ignition switch signal is detected, mode switches to CAN communication status.

CAN Communication System Description

NKS000QF

CAN (Controller Area Network) is a serial communication line for real time application. It is an on-vehicle multiplex communication line with high data communication speed and excellent error detection ability. Modern vehicles are equipped with many electronic control units and each control unit shares information and links with other control units during operation (not independent). In CAN communication, control units are connected with 2 communication lines (CAN H line, CAN L line) allowing a high rate of information transmission with less wiring. Each control unit transmits/receives data but selectively reads required data only.

CAN Communication Unit

NKS000QG

Refer to LAN-47, "CAN System Specification Chart" .

Function of Detecting Ignition Relay Malfunction

NKS000QH

- When contact point of integrated ignition relay is stuck and cannot be turned OFF, IPDM E/R turns ON tail and parking lamps for 10 minutes to indicate ignition relay malfunction.
- When a state of ignition relay having built-in does not agree with a state of Ignition switch signal input by a CAN communication from BCM, IPDM E/R lets tail lamp relay operate.

Ignition switch signal	Ignition relay status	Tail lamp relay
ON	ON	—
OFF	OFF	—
ON	OFF	—
OFF	ON	ON (10 minutes)

NOTE:
When the ignition switch is turned ON, the tail lamps are OFF.

CONSULT-II Function (IPDM E/R)

NKS000QI

CONSULT-II can display each diagnostic item using the diagnostic test mode shown following.

Inspection Item, Diagnosis Mode	Description
SELF-DIAG RESULTS	The IPDM E/R performs diagnosis of the CAN communication and self-diagnosis.
DATA MONITOR	The input/output data of the IPDM E/R is displayed in real time.
CAN DIAG SUPPORT MNTR	The result of transmit/receive diagnosis of CAN communication can be read.
ACTIVE TEST	The IPDM E/R sends a drive signal to electronic components to check their operation.

CONSULT-II BASIC OPERATION

Refer to GI-37, "CONSULT-II Start Procedure" .

SELF-DIAG RESULTS

Operation Procedure

1. Touch “SELF-DIAG RESULTS” on “SELECT DIAG MODE” screen.
2. Check display content in self-diagnostic results.

Display Item List

Display Items	CONSULT-II display code	Malfunction detecting condition	TIME		Possible causes
			CRNT	PAST	
NO DTC IS DETECTED.FURTHER TESTING MAY BE REQUIRED.	—	—	—	—	—
CAN COMM CIRC	U1000	● If CAN communication reception/transmission data has a malfunction, or if any of the control units malfunction, data reception/transmission cannot be confirmed. ● When the data in CAN communication is not received before the specified time	×	×	Any of or several items below have errors. ● TRANSMIT DIAG ● ECM ● BCM/SEC

NOTE:

The details for display of the period are as follows:

- CRNT: Error currently detected with IPDM E/R
- PAST: Error detected in the past and memorized with IPDM E/R

DATA MONITOR

Operation Procedure

1. Touch “DATA MONITOR” on “SELECT MONITOR ITEM ” screen.
2. Touch “ALL SIGNALS”, “MAIN SIGNALS” or “SELECTION FROM MENU” on the “DATA MONITOR” screen.

ALL SIGNALS	All items will be monitored.
MAIN SIGNALS	Monitor the predetermined item.
SELECTION FROM MENU	Select any item for monitoring.

3. Touch the required monitoring item on “SELECTION FROM MENU”. In “ALL SIGNALS”, all items are monitored. In “MAIN SIGNALS”, predetermined items are monitored.
4. Touch “START”.
5. Touch “RECORD” while monitoring to record the status of the item being monitored. To stop recording, touch “STOP”.

All Signals, Main Signals, Selection From Menu

Item name	CONSULT-II screen display	Display or unit	Monitor item selection			Description
			ALL SIGNALS	MAIN SIGNALS	SELECTION FROM MENU	
Motor fan request	MOTOR FAN REQ	1/2/3/4	×	×	×	Signal status input from ECM
Compressor request	AC COMP REQ	ON/OFF	×	×	×	Signal status input from ECM
Position lights request	TAIL&CLR REQ	ON/OFF	×	×	×	Signal status input from BCM
H/L LO request	HL LO REQ	ON/OFF	×	×	×	Signal status input from BCM
H/L HI request	HL HI REQ	ON/OFF	×	×	×	Signal status input from BCM
FR fog request	FR FOG REQ	ON/OFF	×	×	×	Signal status input from BCM
H/L washer request	HL WASHER REQ*1	OFF	×		×	—
FR wiper request	FR WIP REQ	STOP/1LOW/ LOW/HI	×	×	×	Signal status input from BCM
Wiper auto stop	WIP AUTO STOP	ACT P/STOP P	×	×	×	Output status of IPDM E/R
Wiper protection	WIP PROT	OFF/BLOCK	×	×	×	Control status of IPDM E/R
Starter request	ST RLY REQ*1	ON	×		×	—
Ignition relay status	IGN RLY	ON/OFF	×	×	×	Ignition relay status monitored with IPDM E/R
Rear window defogger request	RR DEF REQ	ON/OFF	×	×	×	Signal status input from BCM
Oil pressure switch	OIL P SW	OPEN/CLOSE	×		×	Signal status input in IPDM E/R
DTRL request	DTRL REQ*1	ON/OFF	×		×	—
Hood switch	HOOD SW	ON/OFF	×		×	Input signal status
Theft warning horn request	THFT HRN REQ	ON/OFF	×		×	Signal status input from BCM
Horn chirp	HORN CHIRP	ON/OFF	×		×	Output status of IPDM E/R

NOTE:

- Perform monitoring of IPDM E/R data with the ignition switch ON. When the ignition switch is at ACC, the display may not be correct.
- *1: This item is displayed, but does not function.

ACTIVE TEST

Operation Procedure

1. Touch “ACTIVE TEST” on “SELECT DIAG MODE” screen.
2. Touch item to be tested.
3. Touch “START”, and confirm its operation.
4. Touch “STOP” while testing to stop the operation.

Test item	CONSULT-II screen display	Description
Tail lamp operation	TAIL LAMP	With a certain ON-OFF operation, the tail lamp relay can be operated.
Rear window defogger operation	REAR DEFOGGER	With a certain ON-OFF operation, the rear window defogger relay can be operated.
Front wiper (HI, LO) operation	FRONT WIPER	With a certain operation (OFF, HI ON, LO ON), the front wiper relay (Lo, Hi) can be operated.
Cooling fan operation	MOTOR FAN	With a certain operation (1, 2, 3, 4), the cooling fan can be operated.
Headlamp washer operation	HEAD LAMP WASHER[NOTE]	—
Lamp (HI, LO, FOG) operation	LAMPS	With a certain operation (OFF, HI ON, LO ON, FOG ON), the lamp relay (Lo, Hi, Fog) can be operated.
Horn operation	HORN	Push “ON” button, horn relay operates 20ms.

NOTE:
This item is displayed, but cannot be tested.

Auto Active Test

NKS000QJ

DESCRIPTION

- In auto active test mode, operation inspection can be performed when IPDM E/R sends a drive signal to the following systems:
  - Rear window defogger
  - Front wiper
  - Parking, license plate, side marker and tail lamps
  - Front fog lamps
  - Headlamps (HI, LO)
  - A/C compressor (magnetic clutch)
  - Cooling fan

OPERATION PROCEDURE

1. Close hood and front door (passenger side) and then lift wiper arms away from windshield (to prevent glass damage by wiper operation).

   NOTE:
   When auto active test is performed with hood opened, sprinkle water on windshield beforehand.
2. Turn ignition switch OFF.
3. Turn ignition switch ON, and within 20 seconds, press drivers door switch 10 times (close other door). Then turn ignition switch OFF.
4. Turn ignition switch ON within 10 seconds after ignition switch OFF.
5. When auto active test mode is actuated, horn chirps once. Oil pressure warning lamp starts blinking.
6. After a series of operations is repeated three times, auto active test is completed.

   NOTE:
   When auto active test mode has to be cancelled halfway, turn ignition switch OFF.

   CAUTION:
   Be sure to inspect BL-39, "Check Door Switch" when the auto active test cannot be performed.

INSPECTION IN AUTO ACTIVE TEST MODE

When auto active test mode is actuated, the following eight steps are repeated three times.

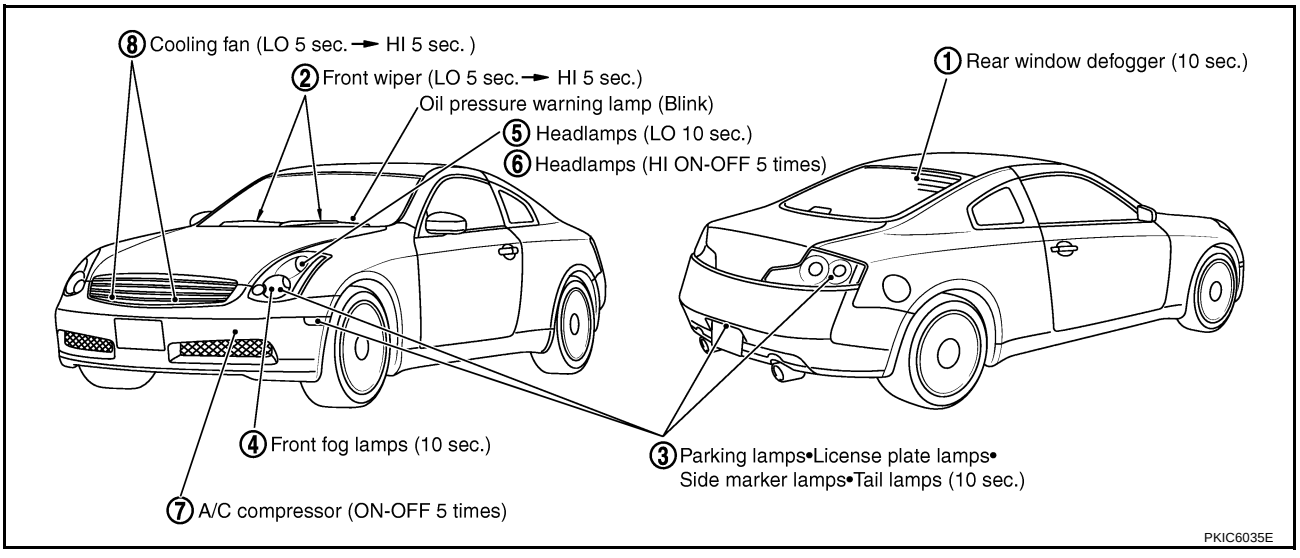

Concept of Auto Active Test

- IPDM E/R actuates auto active test mode when it receives door switch signal from BCM via CAN communication line. Therefore, when auto active test mode is activated successfully, CAN communication between IPDM E/R and BCM is normal.
- If any of systems controlled by IPDM E/R cannot be operated, possible cause can be easily diagnosed using auto active test.

Diagnosis chart in auto active test mode

Symptom	Inspection contents		Possible cause
Rear window defogger does not operate.	Perform auto active test. Does rear window defogger operate?	YES	● BCM signal input circuit malfunction
		NO	● Rear window defogger relay malfunction ● Harness/connector malfunction between IPDM E/R and rear window defogger relay ● Open circuit of rear window defogger ● IPDM E/R malfunction
Any of front wipers, tail and parking lamps, front fog lamps, and head lamps (Hi, Lo) do not operate.	Perform auto active test. Does system in question operate?	YES	● BCM signal input system malfunction
		NO	● Lamp/wiper motor malfunction ● Lamp/wiper motor ground circuit malfunction ● Harness/connector malfunction between IPDM E/R and system in question ● IPDM E/R (integrated relay) malfunction
A/C compressor does not operate.	Perform auto active test. Does magnetic clutch operate?	YES	● BCM signal input circuit malfunction ● CAN communication signal between BCM and ECM. ● CAN communication signal between ECM and IPDM E/R
		NO	● Magnetic clutch malfunction ● Harness/connector malfunction between IPDM E/R and magnetic clutch ● IPDM E/R (integrated relay) malfunction
Cooling fan does not operate.	Perform auto active test. Does cooling fan operate?	YES	● ECM signal input circuit ● CAN communication signal between ECM and IPDM E/R
		NO	● Cooling fan motor malfunction ● Harness/connector malfunction between IPDM E/R and cooling fan motor ● IPDM E/R (integrated relay) malfunction
Oil pressure warning lamp does not operate.	Perform auto active test. Does oil pressure warning lamp blink?	YES	● Harness/connector malfunction between IPDM E/R and oil pressure switch ● Oil pressure switch malfunction ● IPDM E/R malfunction
		NO	● CAN communication signal between IPDM E/R and combination meter ● Combination meter

Schematic

NKS000QK

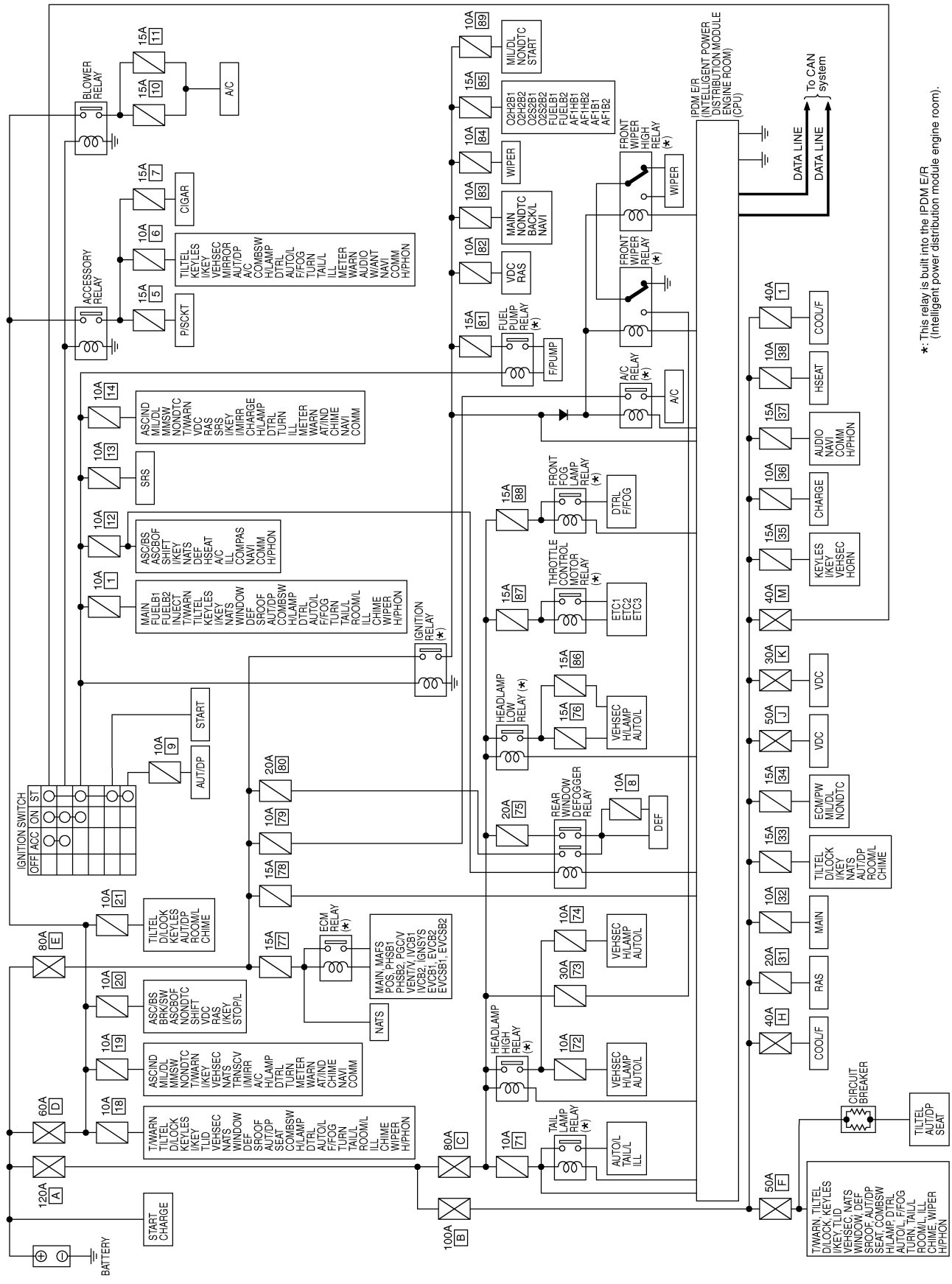

TKWM5245E

IPDM E/R Terminal Arrangement

NKS000QL

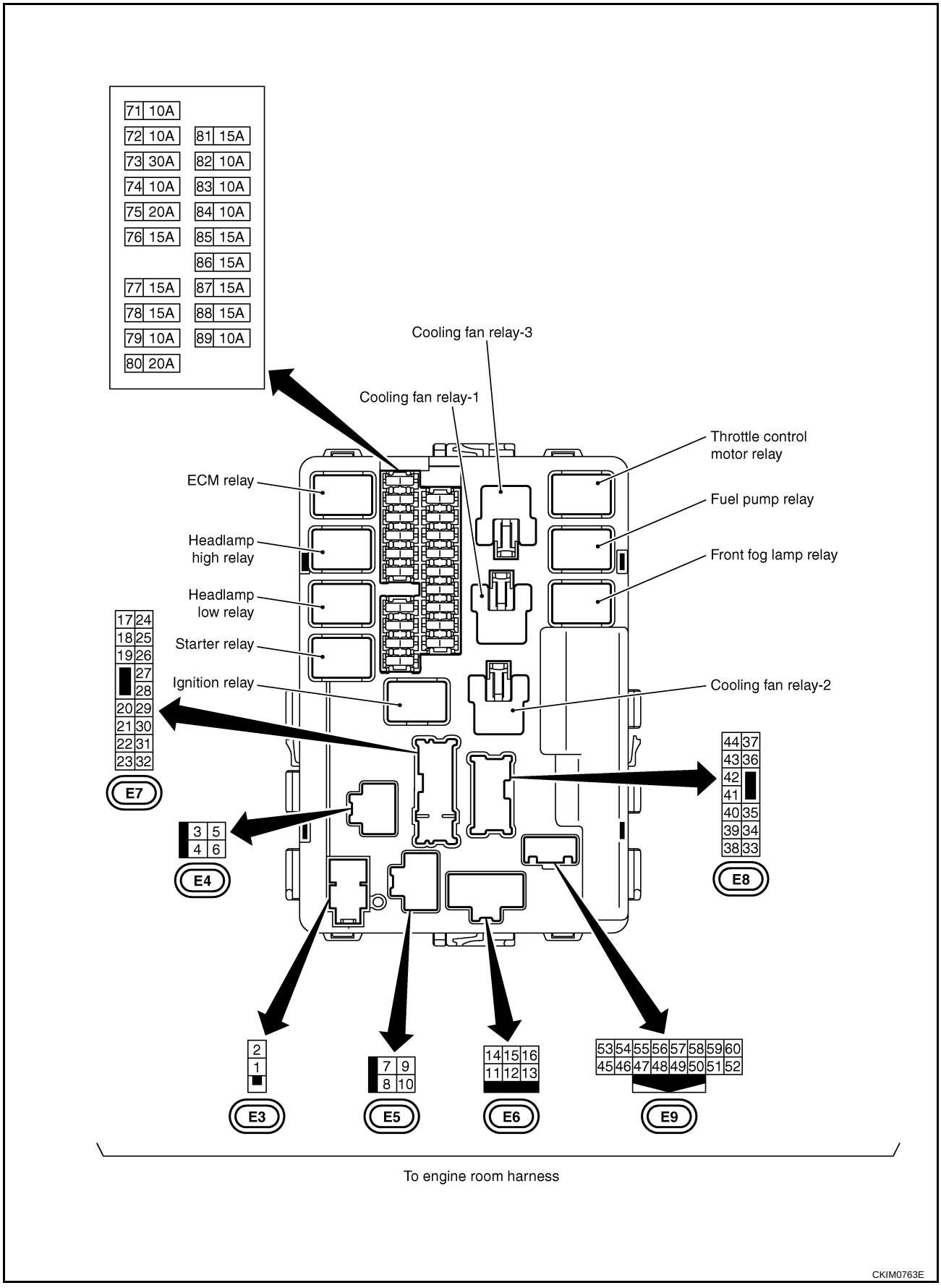

IPDM E/R Power/Ground Circuit Inspection

NKS000QM

1. CHECK FUSE AND FUSIBLE LINK

Make sure the following fusible links or IPDM E/R fuses are not blown.

Terminal No.	Power source	Fuse, fusible link No.
1	Battery	E
2		C
—		71
		78

OK or NG

OK >> GO TO 2.
NG >> If fuse or fusible link is blown, be sure to eliminate cause of malfunction before installing new one.

2. CHECK POWER SUPPLY CIRCUIT

1. Turn ignition switch OFF.
2. Disconnect IPDM E/R harness connector E3.
3. Check voltage between IPDM E/R harness connector E3 terminals 1, 2 and ground.

1, 2 – Ground : Battery voltage

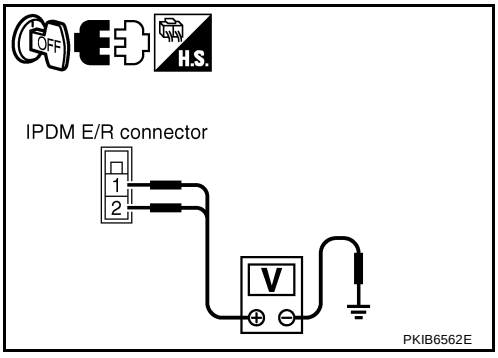

OK or NG

OK >> GO TO 3.
NG >> Repair harness and connector.

3. CHECK GROUND CIRCUIT

1. Disconnect IPDM E/R harness connectors E8 and E9.
2. Check continuity between IPDM E/R harness connectors E8 terminal 38, E9 terminal 50, 60 and ground.

38, 50, 60 – Ground : Continuity should exist.

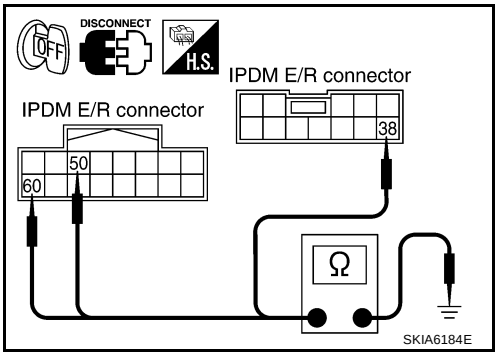

OK or NG

OK >> INSPECTION END
NG >> Repair harness and connector.

Inspection With CONSULT-II (Self-Diagnosis)

NKS000QN

CAUTION:

If CONSULT-II is used with no connection of CONSULT-II CONVERTER, malfunctions might be detected in self-diagnosis depending on control unit which carry out CAN communication.

1. CHECK SELF DIAGNOSTIC RESULT

1. Connect CONSULT-II and select “IPDM E/R” on the “SELECT SYSTEM” screen.
2. Select “SELF-DIAG RESULTS” on the “SELECT DIAG MODE” screen.
3. Check display content in self diagnostic results.

CONSULT-II display	CONSULT-II display code	TIME		Details of diagnosis result
		CRNT	PAST	
NO DTC IS DETECTED. FURTHER TESTING MAY BE REQUIRED.	—	—	—	No malfunction
CAN COMM CIRC	U1000	×	×	Any of or several items below have errors. ● TRANSMIT DIAG ● ECM ● BCM/SEC

NOTE:

The details for display of the period are as follows:

- CRNT: Error currently detected with IPDM E/R
- PAST: Error detected in the past and memorized with IPDM E/R

Contents displayed

NO DTC IS DETECTED.FURTHER TESTING MAY BE REQUIRED.>>INSPECTION END

CAN COMM CIRC>>After print-out of the monitor items, refer to LAN-42, "Precautions When Using CONSULT-II" .

Removal and Installation of IPDM E/R

NKS000QO

REMOVAL

1. Remove battery. Refer to SC-9, "Removal and Installation" .

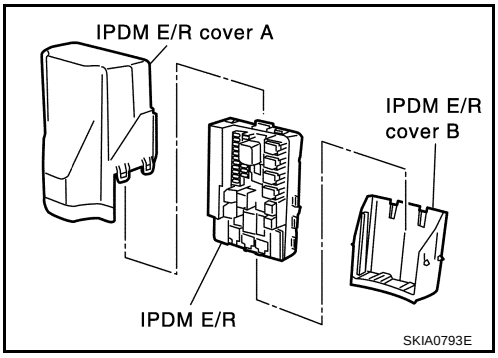

2. Remove IPDM E/R cover A. While pushing pawl on backside of IPDM E/R cover B toward vehicle front to unlock, lift up IPDM E/R.

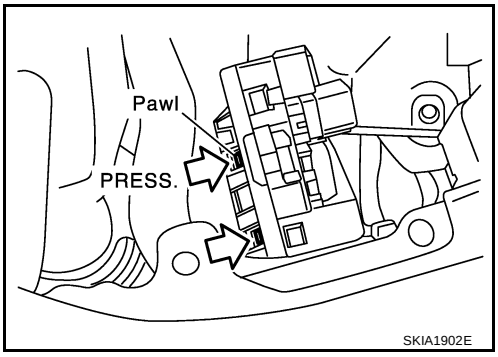

3. While pushing tabs on right and left side of IPDM E/R, remove IPDM E/R cover B from IPDM E/R.
4. Remove harness connector from IPDM E/R.

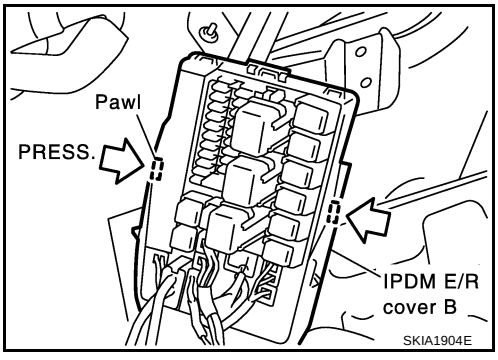

INSTALLATION

Installation is the reverse order of removal.

GROUND

PFP:00011

Ground Distribution

NKS000QP

MAIN HARNESS

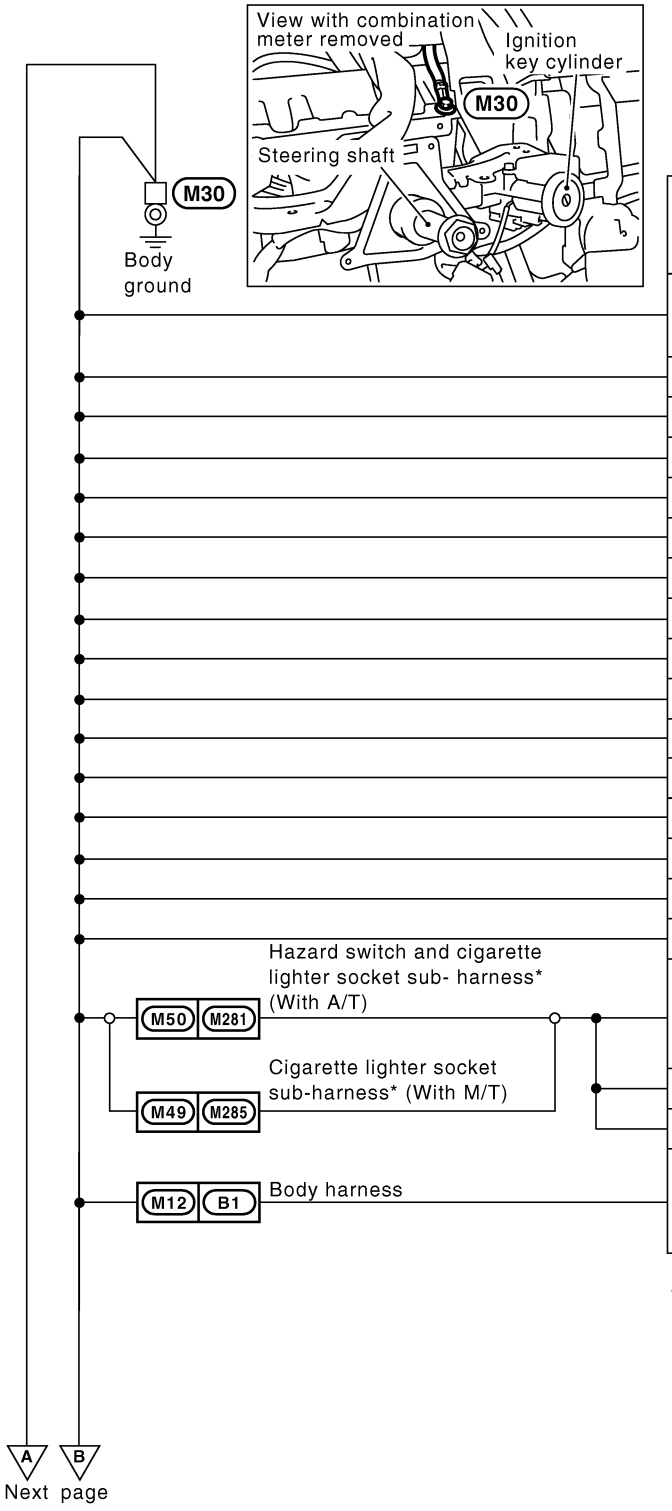

CON-NECTOR NUMBER	CONNECT TO
M5	Fuse block (J/B) (Terminal No. 7B) • Accessory relay • Blower relay
M7	Illumination control switch
M8	Data link connector (Terminal No. 4)
M9	VDC off switch
M19	Combination meter (Terminal No. 1)
M19	Combination meter (Terminal No. 24)
M19	Combination meter (Terminal No. 25)
M22	Steering angle sensor
M28	Door mirror remote control switch
M29	Combination switch
M31	Display and A/C auto amp. (Terminal No. 24)
M38	A/C and audio controller
M55	Air bag diagnosis sensor unit
M81	Compass
M93	VDC/TCS/ABS control unit (Terminal No. 28)
M93	VDC/TCS/ABS control unit (Terminal No. 29)
M284	Cigarette lighter socket
–	Cigarette lighter socket illumination
–	Ashtray illumination
B27	Fuel level sensor unit and fuel pump (Terminal No. 5) • Fuel level sensor (Main) • Fuel tank temperature sensor

* : This sub-harness is not shown in “HARNESS LAYOUT”.

CKIM0717E

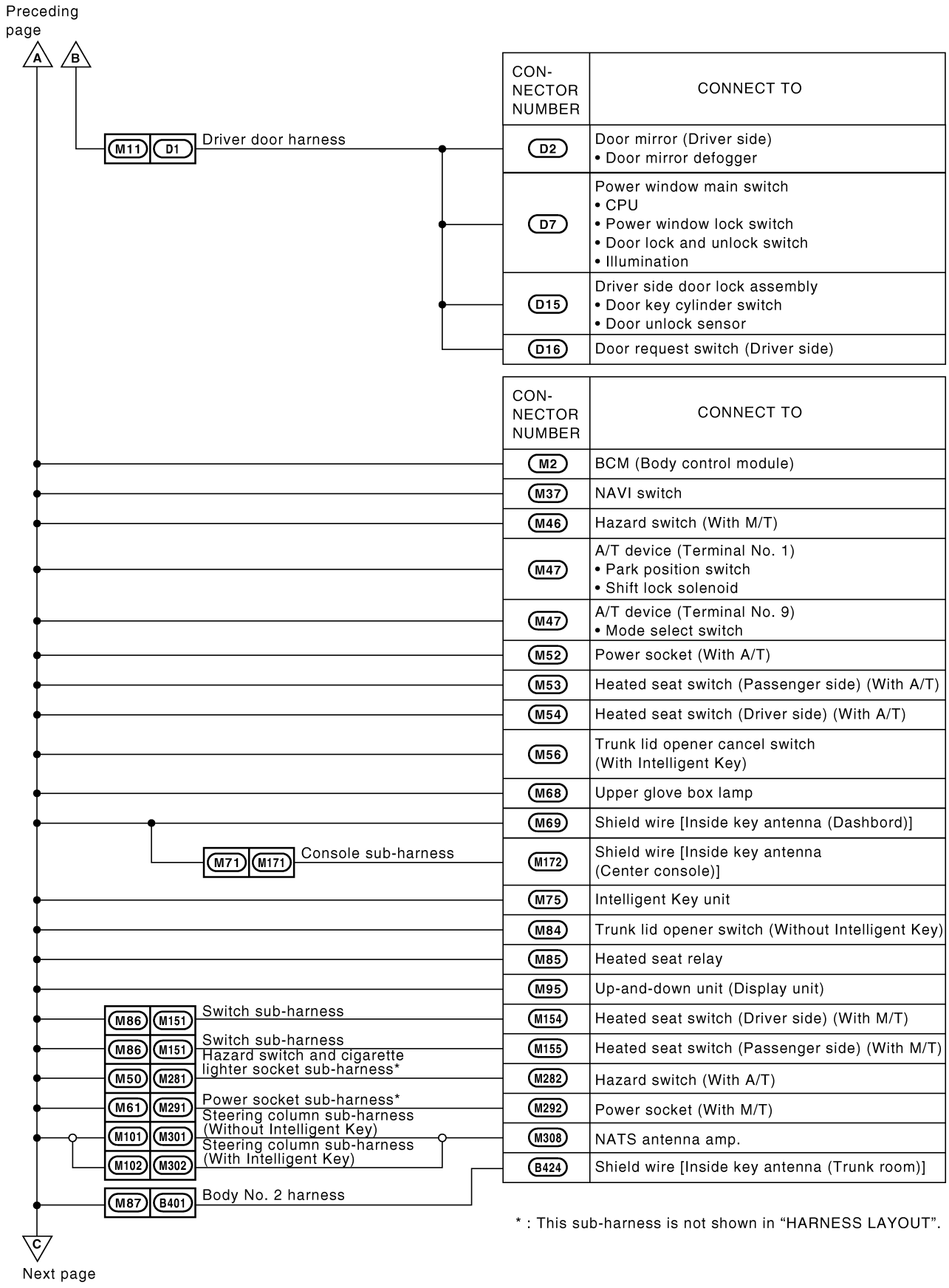

CON-NECTOR NUMBER	CONNECT TO
D2	Door mirror (Driver side) • Door mirror defogger
D7	Power window main switch • CPU • Power window lock switch • Door lock and unlock switch • Illumination
D15	Driver side door lock assembly • Door key cylinder switch • Door unlock sensor
D16	Door request switch (Driver side)

CON-NECTOR NUMBER	CONNECT TO
M2	BCM (Body control module)
M37	NAVI switch
M46	Hazard switch (With M/T)
M47	A/T device (Terminal No. 1) • Park position switch • Shift lock solenoid
M47	A/T device (Terminal No. 9) • Mode select switch
M52	Power socket (With A/T)
M53	Heated seat switch (Passenger side) (With A/T)
M54	Heated seat switch (Driver side) (With A/T)
M56	Trunk lid opener cancel switch (With Intelligent Key)
M68	Upper glove box lamp
M69	Shield wire [Inside key antenna (Dashbord)]
M172	Shield wire [Inside key antenna (Center console)]
M75	Intelligent Key unit
M84	Trunk lid opener switch (Without Intelligent Key)
M85	Heated seat relay
M95	Up-and-down unit (Display unit)
M154	Heated seat switch (Driver side) (With M/T)
M155	Heated seat switch (Passenger side) (With M/T)
M282	Hazard switch (With A/T)
M292	Power socket (With M/T)
M308	NATS antenna amp.
B424	Shield wire [Inside key antenna (Trunk room)]

* : This sub-harness is not shown in “HARNESS LAYOUT”.

CKIM0718E

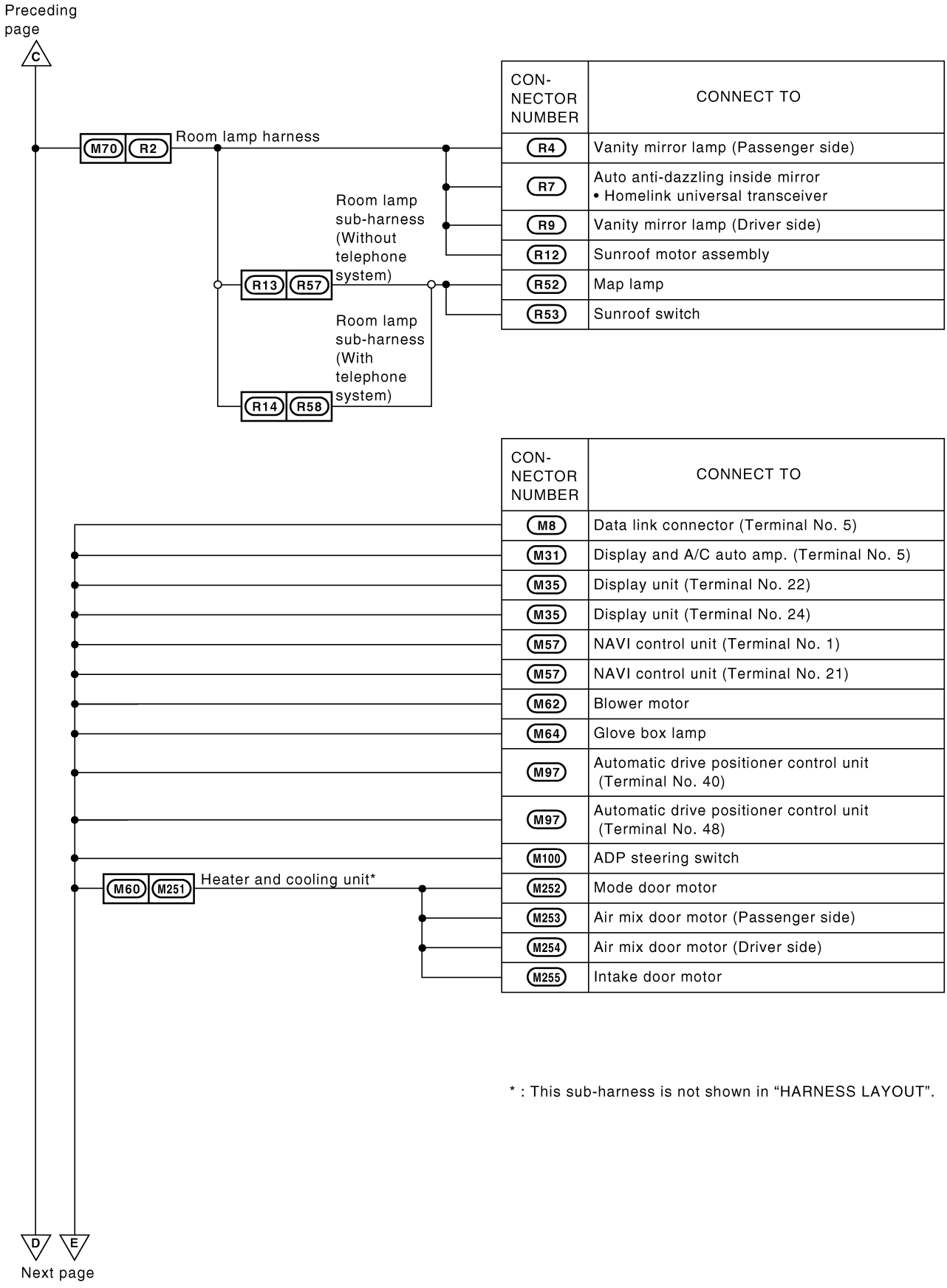

CON-NECTOR NUMBER	CONNECT TO
R4	Vanity mirror lamp (Passenger side)
R7	Auto anti-dazzling inside mirror • Homelink universal transceiver
R9	Vanity mirror lamp (Driver side)
R12	Sunroof motor assembly
R52	Map lamp
R53	Sunroof switch

CON-NECTOR NUMBER	CONNECT TO
M8	Data link connector (Terminal No. 5)
M31	Display and A/C auto amp. (Terminal No. 5)
M35	Display unit (Terminal No. 22)
M35	Display unit (Terminal No. 24)
M57	NAVI control unit (Terminal No. 1)
M57	NAVI control unit (Terminal No. 21)
M62	Blower motor
M64	Glove box lamp
M97	Automatic drive positioner control unit (Terminal No. 40)
M97	Automatic drive positioner control unit (Terminal No. 48)
M100	ADP steering switch
M252	Mode door motor
M253	Air mix door motor (Passenger side)
M254	Air mix door motor (Driver side)
M255	Intake door motor

* : This sub-harness is not shown in “HARNESS LAYOUT”.

CKIM0573E

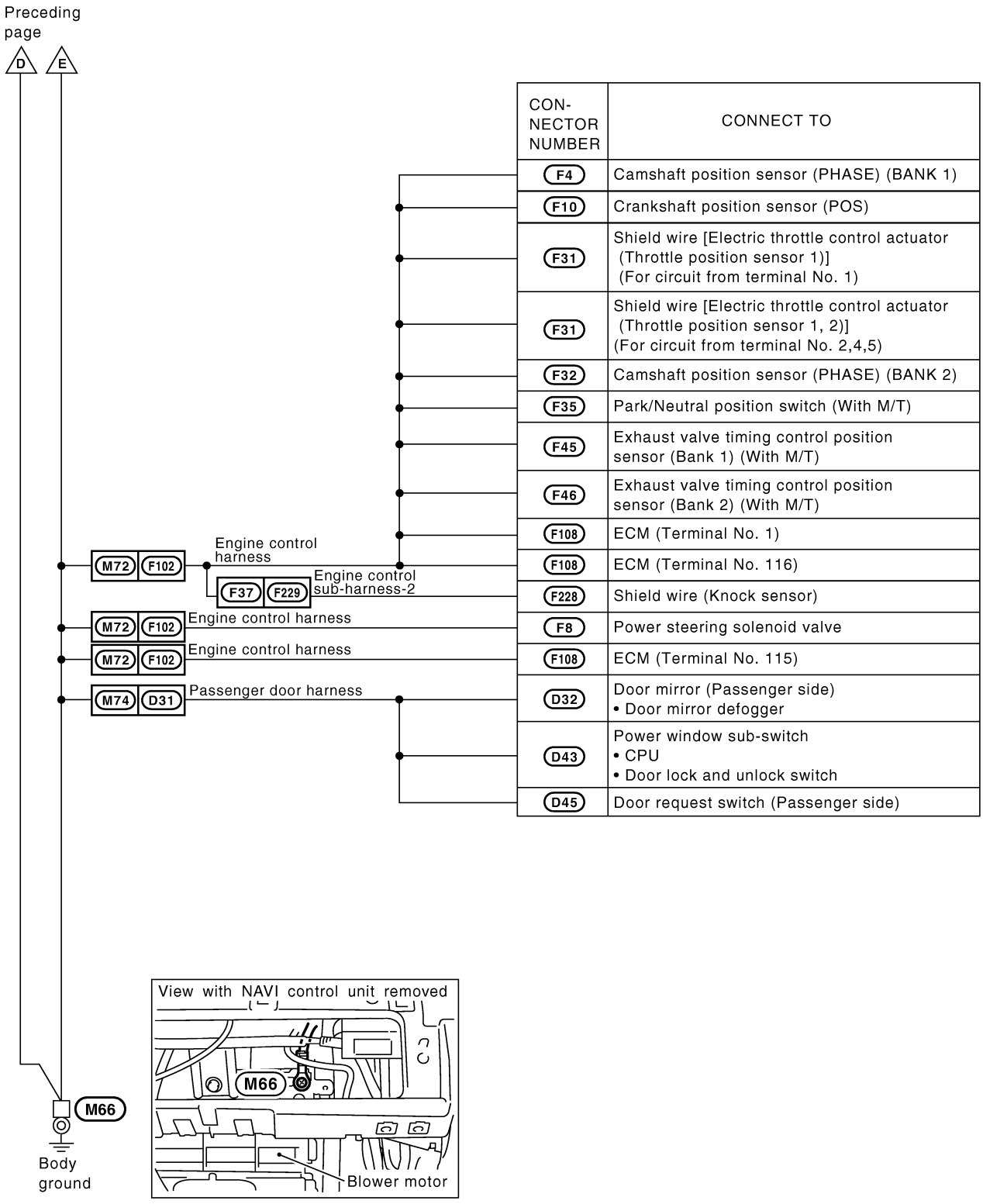

CON-NECTOR NUMBER	CONNECT TO
F4	Camshaft position sensor (PHASE) (BANK 1)
F10	Crankshaft position sensor (POS)
F31	Shield wire [Electric throttle control actuator (Throttle position sensor 1)] (For circuit from terminal No. 1)
F31	Shield wire [Electric throttle control actuator (Throttle position sensor 1, 2)] (For circuit from terminal No. 2,4,5)
F32	Camshaft position sensor (PHASE) (BANK 2)
F35	Park/Neutral position switch (With M/T)
F45	Exhaust valve timing control position sensor (Bank 1) (With M/T)
F46	Exhaust valve timing control position sensor (Bank 2) (With M/T)
F108	ECM (Terminal No. 1)
F108	ECM (Terminal No. 116)
F228	Shield wire (Knock sensor)
F8	Power steering solenoid valve
F108	ECM (Terminal No. 115)
D32	Door mirror (Passenger side) • Door mirror defogger
D43	Power window sub-switch • CPU • Door lock and unlock switch
D45	Door request switch (Passenger side)

CKIM0574E

ENGINE ROOM HARNESS

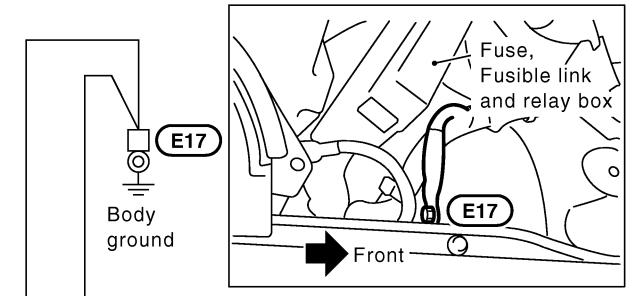

CON-NECTOR NUMBER	CONNECT TO
E6	IPDM E/R (Intelligent power distribution module engine room) (Terminal No. 14)
E24	Front combination lamp RH (Terminal No. 4) • Headlamp
E30	Washer level sensor
E41	Front combination lamp LH (Terminal No. 8) • Fog • High beam solenoid • Turn signal/Parking • Parking

E108 M15 Main harness

CON-NECTOR NUMBER	CONNECT TO
M31	Display and A/C auto amp. (Terminal No. 36) (For Canada)
E8	IPDM E/R (Intelligent power distribution module engine room) (Terminal No. 38)
E9	IPDM E/R (Intelligent power distribution module engine room) (Terminal No. 50)
E9	IPDM E/R (Intelligent power distribution module engine room) (Terminal No. 60)
E23	Hood switch
E24	Front combination lamp RH (Terminal No. 8) • Fog • High beam solenoid • Turn signal/Parking • Parking
E28	Front side marker lamp RH
E33	Horn (Low)
E36	Horn (High)
E39	Cooling fan motor-1
E40	Front side marker lamp LH

F G

Next page

CKIM0575E

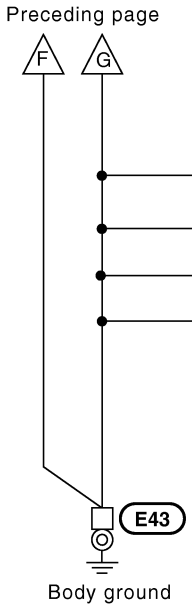

CON-NECTOR NUMBER	CONNECT TO
E41	Front combination lamp LH (Terminal No. 4) • Headlamp
E44	Brake fluid level switch
E52	Front wiper motor
E53	Cooling fan motor-2

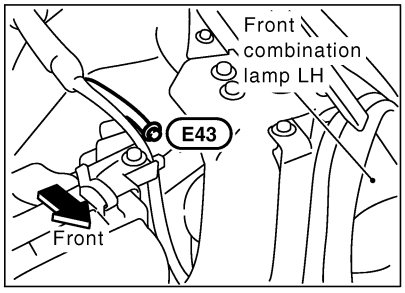

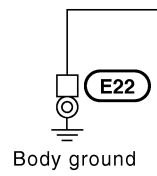

CON-NECTOR NUMBER	CONNECT TO
E37	Shield wire (Crash zone sensor)

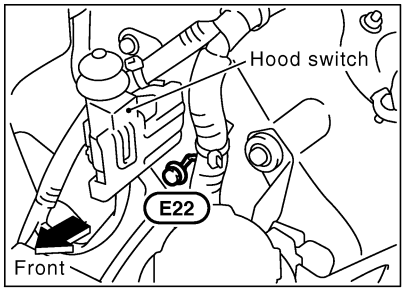

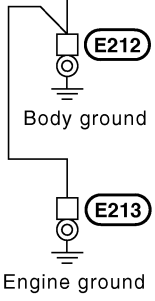

CON-NECTOR NUMBER	CONNECT TO
E211	Alternator (E)

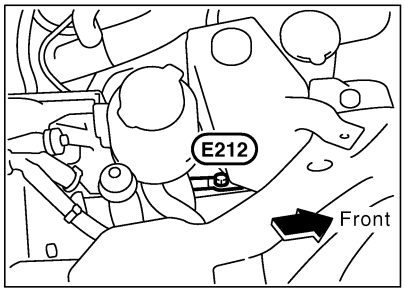

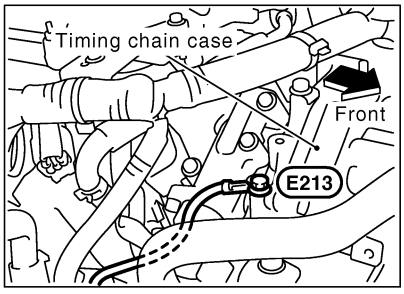

CKIM0576E

ENGINE CONTROL HARNESS

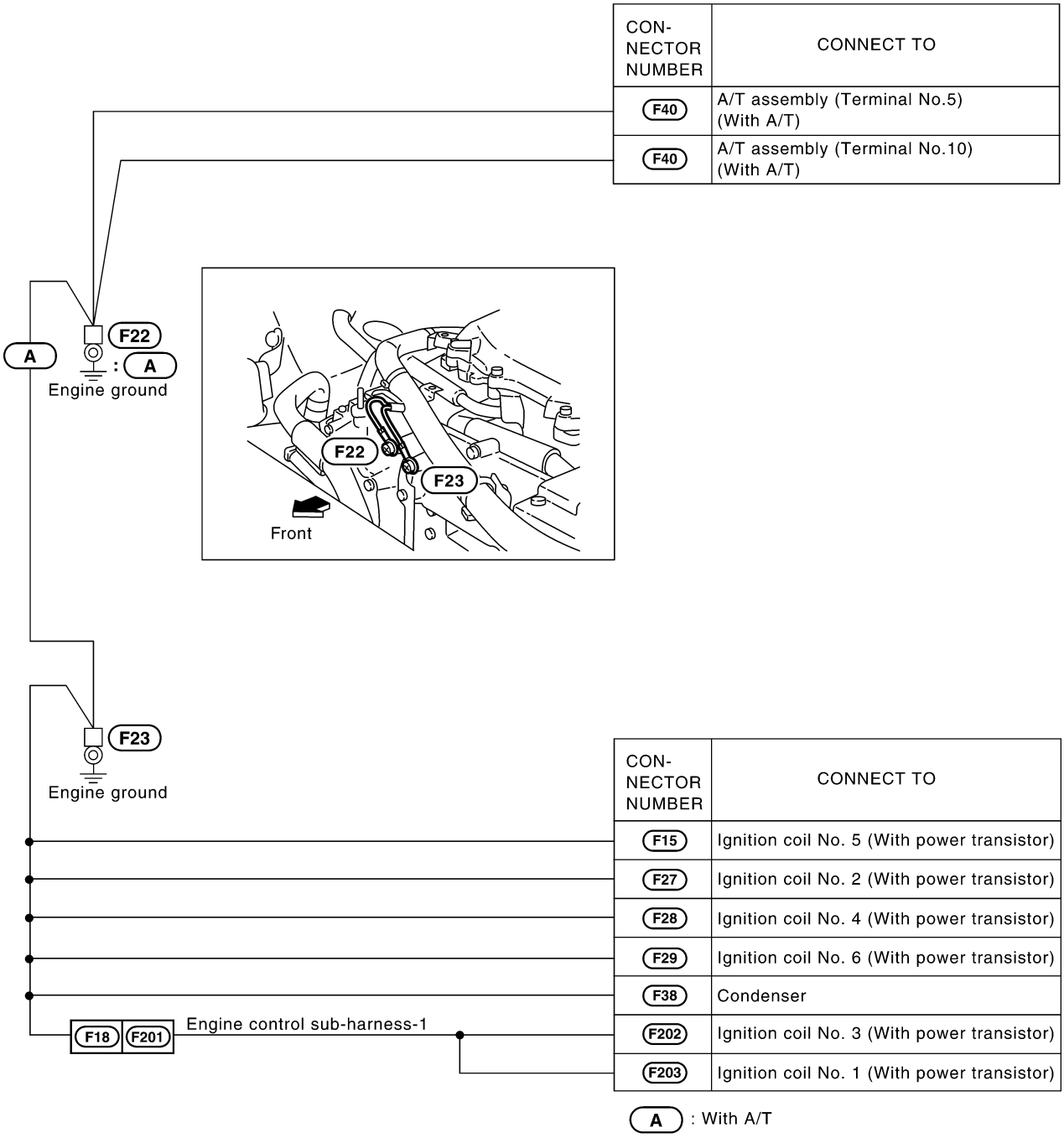

CON-NECTOR NUMBER	CONNECT TO
F40	A/T assembly (Terminal No.5) (With A/T)
F40	A/T assembly (Terminal No.10) (With A/T)

CON-NECTOR NUMBER	CONNECT TO
F15	Ignition coil No. 5 (With power transistor)
F27	Ignition coil No. 2 (With power transistor)
F28	Ignition coil No. 4 (With power transistor)
F29	Ignition coil No. 6 (With power transistor)
F38	Condenser
F202	Ignition coil No. 3 (With power transistor)
F203	Ignition coil No. 1 (With power transistor)

CKIM0283E

BODY HARNESS

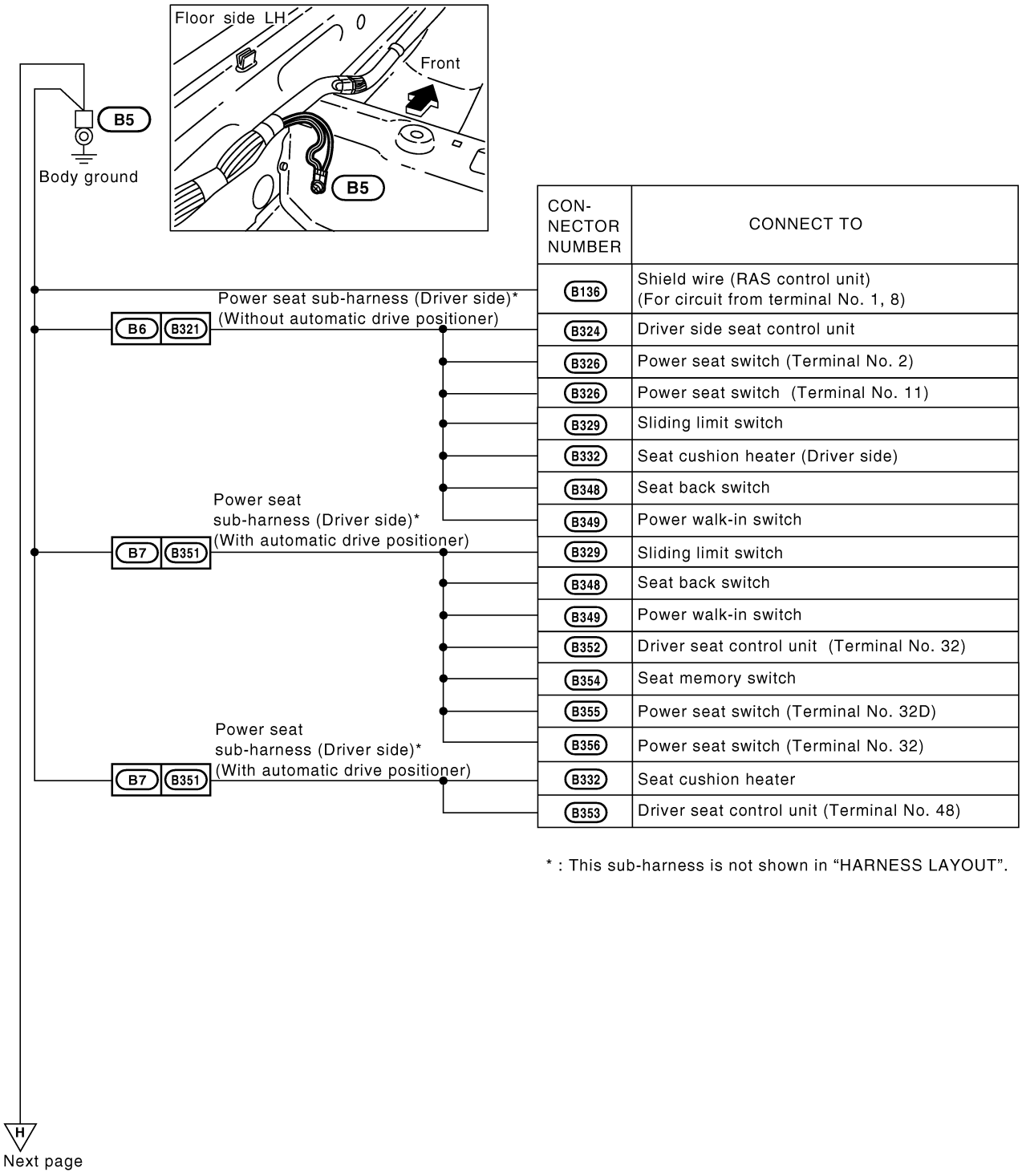

CON-NECTOR NUMBER	CONNECT TO
B136	Shield wire (RAS control unit) (For circuit from terminal No. 1, 8)
B324	Driver side seat control unit
B326	Power seat switch (Terminal No. 2)
B326	Power seat switch (Terminal No. 11)
B329	Sliding limit switch
B332	Seat cushion heater (Driver side)
B348	Seat back switch
B349	Power walk-in switch
B329	Sliding limit switch
B348	Seat back switch
B349	Power walk-in switch
B352	Driver seat control unit (Terminal No. 32)
B354	Seat memory switch
B355	Power seat switch (Terminal No. 32D)
B356	Power seat switch (Terminal No. 32)
B332	Seat cushion heater
B353	Driver seat control unit (Terminal No. 48)

* : This sub-harness is not shown in “HARNESS LAYOUT”.

CKIM0577E

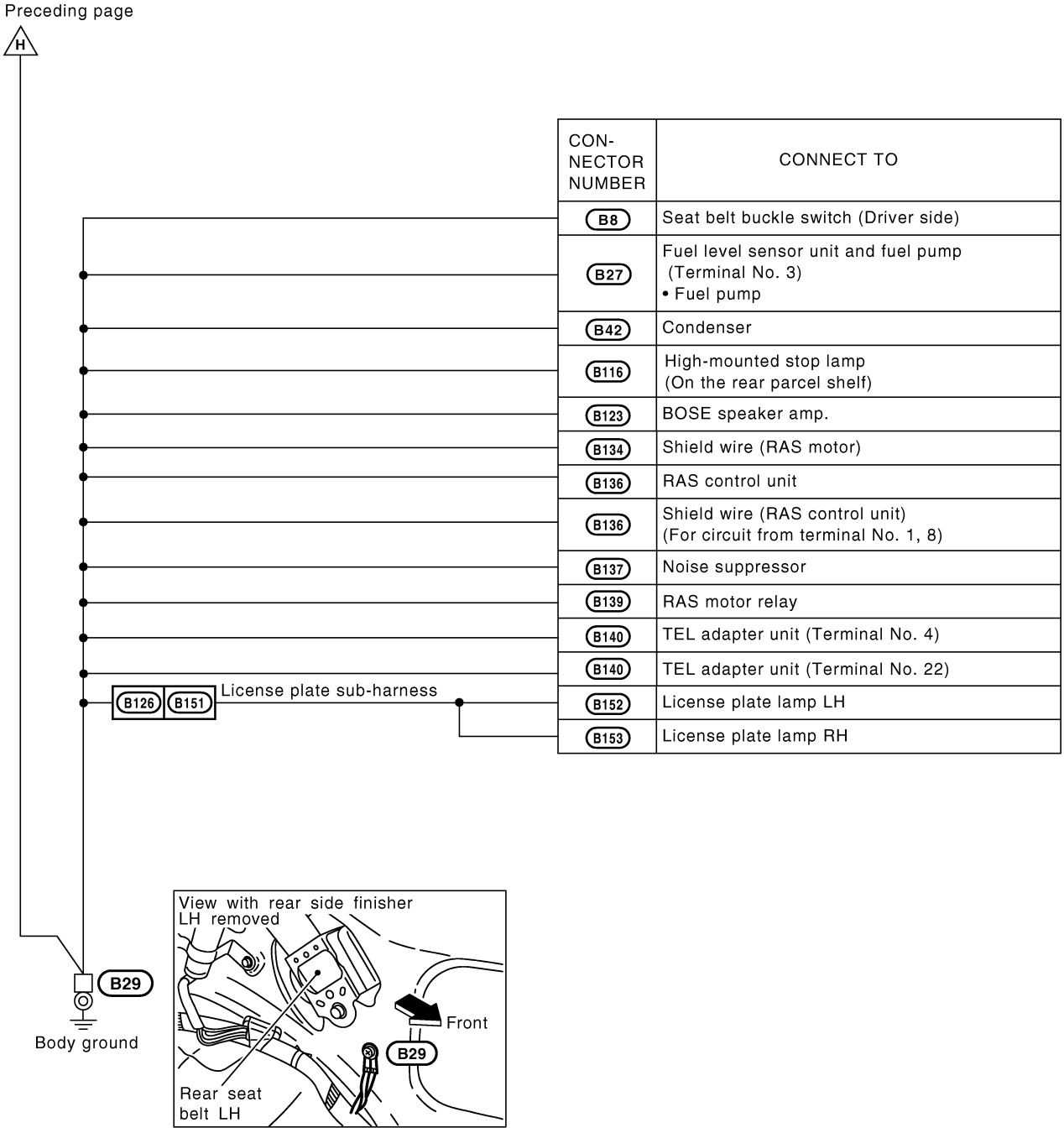

CON-NECTOR NUMBER	CONNECT TO
B8	Seat belt buckle switch (Driver side)
B27	Fuel level sensor unit and fuel pump (Terminal No. 3) • Fuel pump
B42	Condenser
B116	High-mounted stop lamp (On the rear parcel shelf)
B123	BOSE speaker amp.
B134	Shield wire (RAS motor)
B136	RAS control unit
B136	Shield wire (RAS control unit) (For circuit from terminal No. 1, 8)
B137	Noise suppressor
B139	RAS motor relay
B140	TEL adapter unit (Terminal No. 4)
B140	TEL adapter unit (Terminal No. 22)
B152	License plate lamp LH
B153	License plate lamp RH

CKIM0578E

CON-NECTOR NUMBER	CONNECT TO
B125	Rear combination lamp LH • Tail and stop • Turn signal • Back-up • Side marker • Trunk opener request switch (With Intelligent Key) • Outside trunk lid opener switch (Without Intelligent Key)
B127	Rear combination lamp RH • Tail and stop • Turn signal • Back-up • Side marker

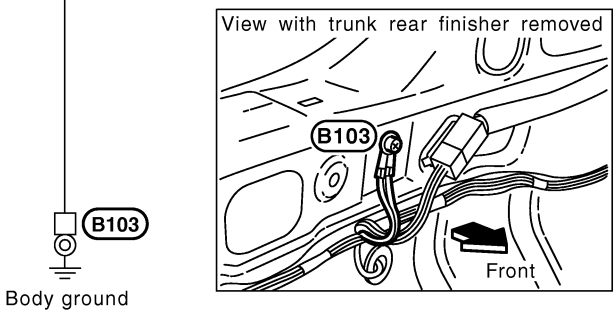

CON-NECTOR NUMBER	CONNECT TO
B181	RAS motor

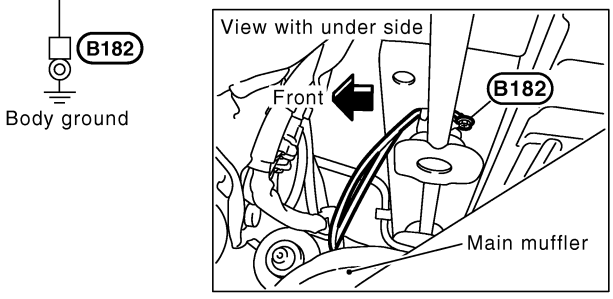

CKIM0719E

BODY NO. 2 HARNESS

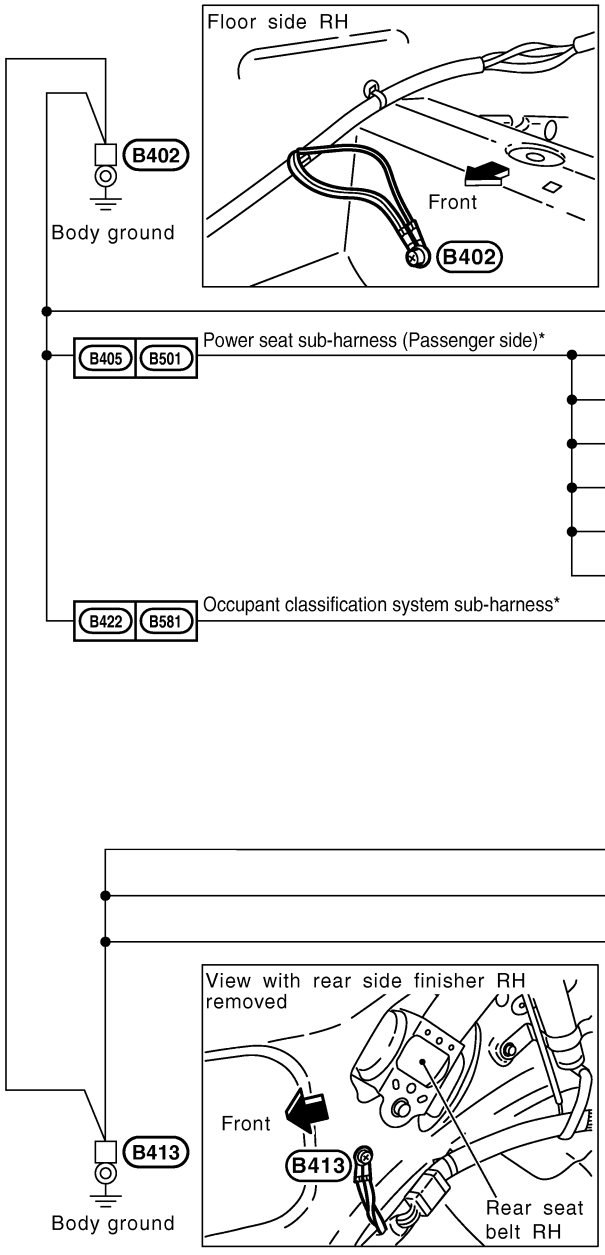

CON-NECTOR NUMBER	CONNECT TO
B406	Seat belt buckle switch (Passenger side)
B502	Passenger side seat control unit
B503	Power seat switch
B505	Seat cushion heater
B509	Sliding limit switch
B518	Seat back switch
B519	Power walk-in switch
B582	Occupant classification system control unit

CON-NECTOR NUMBER	CONNECT TO
B419	Trunk lid lock assembly
B421	High-mounted stop lamp (In the rear air spoiler)
B424	Shield wire [Inside key antenna (Trunk room)]

CKIM0720E

CON-NECTOR NUMBER	CONNECT TO
B451	Rear window defogger (−)

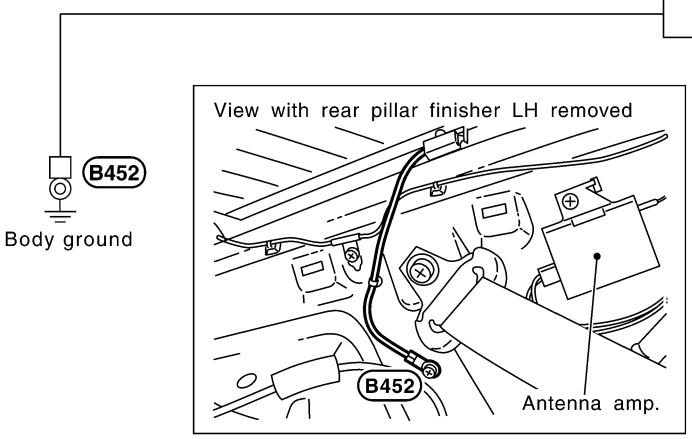

CKIT0254E

HARNESS

PFP:00011

Harness Layout

NKS000QQ

HOW TO READ HARNESS LAYOUT

The following Harness Layouts use a map style grid to help locate connectors on the figures:

- Main Harness
- Engine Room Harness (Engine Compartment)
- Engine Control Harness
- Body Harness (Passenger Compartment)
- Body No. 2 Harness

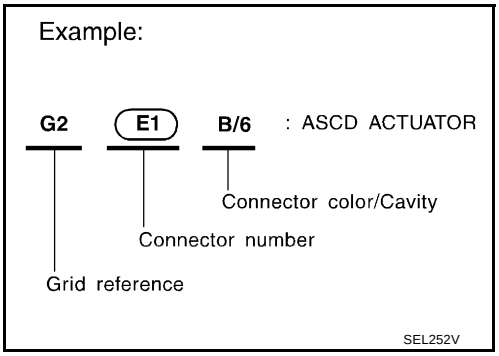

To Use the Grid Reference

1. Find the desired connector number on the connector list.
2. Find the grid reference.
3. On the figure, find the crossing of the grid reference letter column and number row.
4. Find the connector number in the crossing zone.
5. Follow the line (if used) to the connector.

CONNECTOR SYMBOL

Main symbols of connector (in Harness Layout) are indicated in the below.

Connector type	Water proof type		Standard type	
	Male	Female	Male	Female
• Cavity: Less than 4 • Relay connector				
• Cavity: From 5 to 8				
• Cavity: More than 9				
• Ground terminal etc.	—			

CKIT0108E

OUTLINE

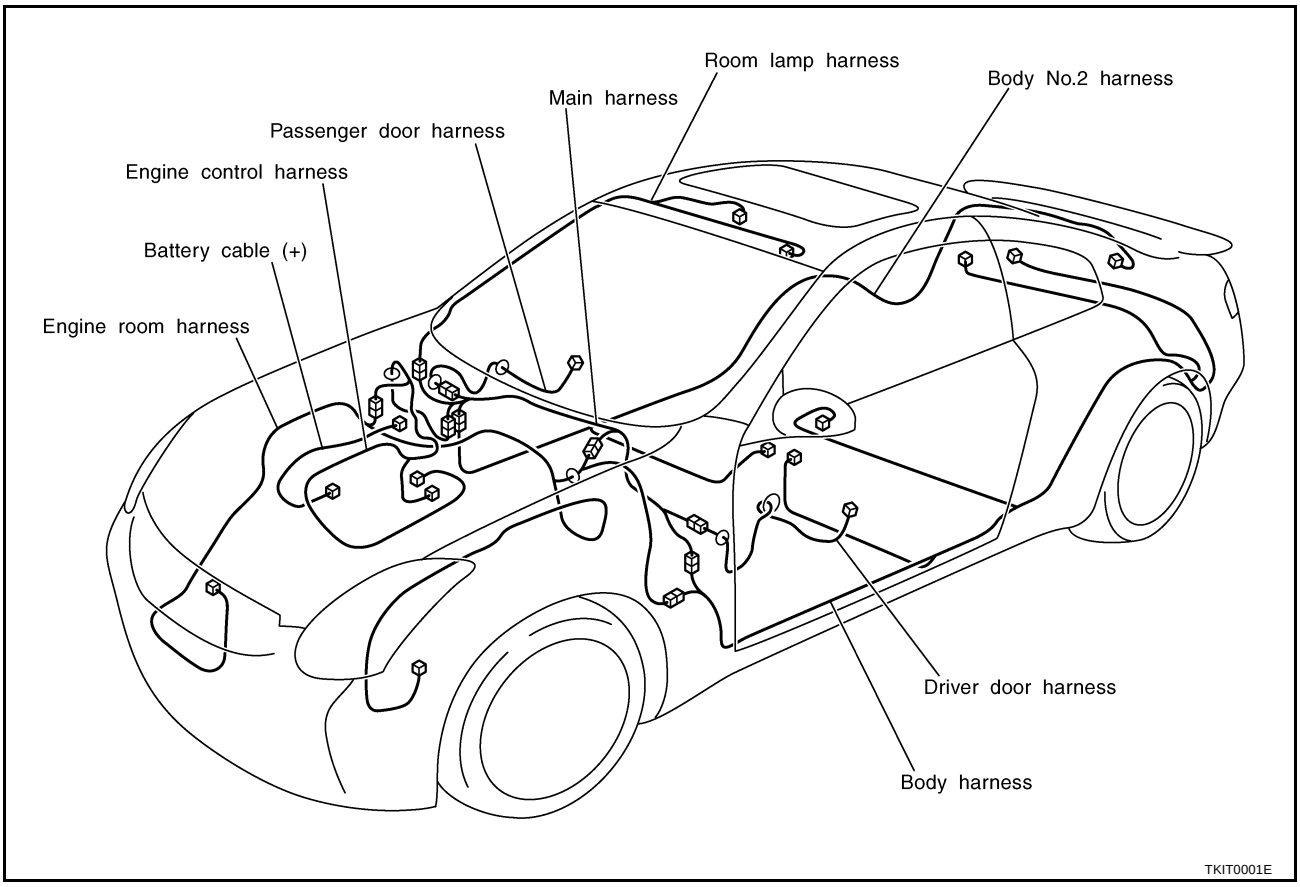
Room lamp harness
Body No.2 harness
Main harness
Passenger door harness
Engine control harness
Battery cable (+)
Engine room harness
Driver door harness
Body harness
TKIT0001E

MAIN HARNESS

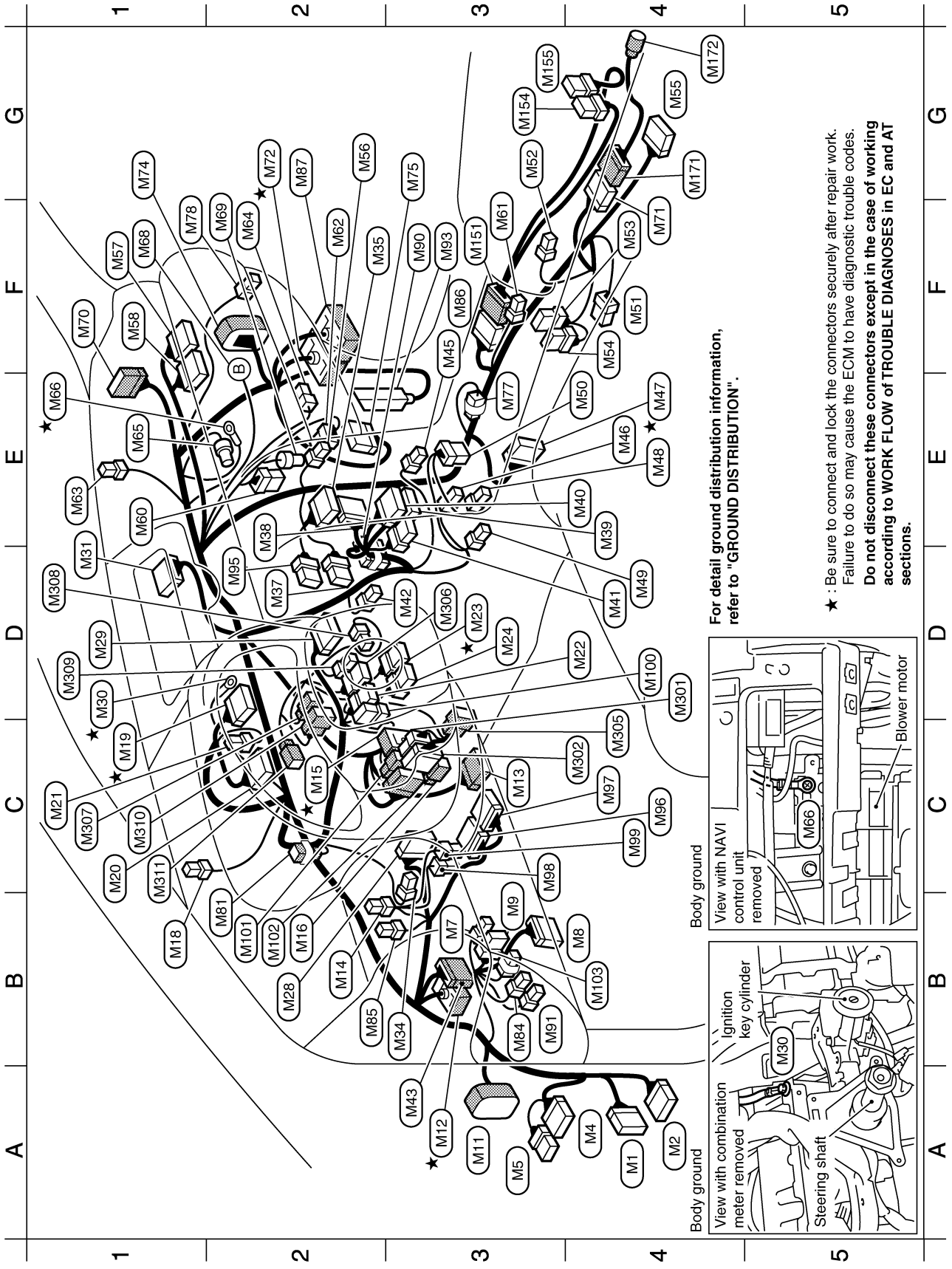

TKIM0848E

A4	M1	W/40	BCM (Body control module)
A4	M2	B/15	BCM (Body control module)
A4	M4	W/16	Fuse block (J/B)
A3	M5	W/8	Fuse block (J/B)
B3	M7	W/3	Illumination control switch
B4	M8	W/16	Data link connector
B3	M9	GY/6	VDC off switch
A3	M11	SMJ	To D1
A3 ★	M12	SMJ	To B1
C3	M13	BR/16	To E105
B2	M14	W/2	Circuit breaker
C2 ★	M15	SMJ	To E108
B2	M16	Y/4	To E109
B1	M18	B/2	Sunload sensor
C1 ★	M19	W/40	Combination meter
C1	M20	W/12	Combination meter
C1	M21	W/3	Intelligent Key warning buzzer (Instrument panel) (With Intelligent Key)
D4	M22	W/8	Steering angle sensor
D3 ★	M23	GY/8	Combination switch (Spiral cable)
D3	M24	Y/6	Combination switch (Spiral cable)
B2	M28	W/10	Door mirror remote control switch
D1	M29	W/16	Combination switch
D1 ★	M30	—	Body ground
D1	M31	W/40	Display and A/C auto amp.
B3	M34	W/2	Security indicator lamp
F2	M35	W/24	Display unit (With navigation system)
D2	M37	W/8	NAVI switch (With navigation system)
E2	M38	W/12	A/C and audio controller
E4	M39	W/16	Audio unit
E4	M40	W/10	Audio unit
D4	M41	W/6	Audio unit
D3	M42	W/2	In-vehicle sensor
A3	M43	W/12	To B43 (With option connector for satellite radio system)
F3	M45	BR/2	Antenna amp. (Via sub-harness)
E4	M46	W/4	Hazard switch (With M/T)
E4 ★	M47	W/10	A/T device (With A/T)
E4	M48	BR/2	A/T illumination (With A/T)
D4	M49	W/3	Cigarette lighter socket (Via sub-harness) (With M/T)
E4	M50	W/8	Hazard switch and Cigarette lighter socket (Via sub-harness) (With A/T)
F4	M51	B/6	Yaw rate/side G sensor
G3	M52	B/2	Power socket (With A/T)
F4	M53	BR/6	Heated seat switch (Passenger side) (With A/T)
F4	M54	W/6	Heated seat switch (Driver side) (With A/T)
G4	M55	Y/28	Air bag diagnosis sensor unit
G2	M56	W/2	Trunk lid opener cancel switch
F1	M57	W/40	NAVI control unit (With navigation system)
F1	M58	W/32	NAVI control unit (With navigation system)
E1	M60	W/6	Heater and cooling unit (Via sub-harness)
F3	M61	W/2	Power socket (Via sub-harness) (With M/T)
F2	M62	W/6	Blower motor
E1	M63	W/3	Optical sensor
F2	M64	W/2	Glove box lamp
E1	M65	Y/4	Front passenger air bag module
E1 ★	M66	—	Body ground
F1	M68	Bulb	Upper glove box lamp (Without navigation system)
F2	M69	GY/2	Inside key antenna (Dashboard) (With Intelligent Key)
F1	M70	W/18	To R2
F4	M71	W/32	To M171 (With Intelligent Key)
G2 ★	M72	SMJ	To F102
G1	M74	SMJ	To D31
G3	M75	W/40	Intelligent Key unit (With Intelligent Key)
E3	M77	W/2	Diode (With A/T)
F1	M78	W/4	Remote keyless entry receiver
B2	M81	W/4	Compass
B3	M84	W/4	Trunk lid opener switch
B2	M85	L/4	Heated seat relay
F3	M86	W/12	To M151 (With M/T)
G2	M87	SMJ	To B401
F3	M90	W/12	Option connector for audio unit
B3	M91	W/2	Tire pressure warning check switch
F3	M93	SMJ	VDC/TCS/ABS control unit
D2	M95	GY/6	Up-and-down unit (Display unit) (With navigation system)
C4	M96	W/32	Automatic drive positioner control unit (With automatic drive positioner or electric tilt and telescopic steering)
C4	M97	W/16	Automatic drive positioner control unit (With automatic drive positioner or electric tilt and telescopic steering)
C3	M98	W/4	Tilt motor and telescopic motor (With automatic drive positioner or electric tilt and telescopic steering)
C4	M99	W/4	Tilt sensor and telescopic sensor (With automatic drive positioner or electric tilt and telescopic steering)
D4	M100	GY/6	ADP steering switch (With automatic drive positioner or electric tilt and telescopic steering)
B2	M101	W/8	To M301 (Without Intelligent Key)
B2	M102	W/12	To M302 (With Intelligent Key)
B4	M103	-/2	Resistor

★: Be sure to connect and lock the connectors securely after repair work. Failure to do so may cause the ECM to have diagnostic trouble codes. **Do not disconnect these connectors except in the case of working according to WORK FLOW of TROUBLE DIAGNOSES in EC and AT sections.**

TKIM0496E

Switch sub-harness (With M/T)

F3	M151	W/12	:	To M86
G3	M154	W/6	:	Heated seat switch (Driver side)
G3	M155	BR/6	:	Heated seat switch (Passenger side)

Console sub-harness (With Intelligent Key)

G4	M171	W/32	:	To M71
G4	M172	GY/2	:	Inside key antenna (Center console)

Steering column sub-harness

D4	M301	W/8	:	To M101 (Without Intelligent Key)
C4	M302	W/12	:	To M102 (With Intelligent Key)
C4	M305	W/6	:	To E112
D3	M306	W/6	:	Ignition switch
C1	M307	BR/2	:	Key switch (Without Intelligent Key)
D1	M308	W/4	:	NATS antenna amp.
D1	M309	W/2	:	Ignition keyhole illumination
C1	M310	GY/6	:	Key switch and ignition knob switch (With Intelligent Key)
C1	M311	W/4	:	Steering lock unit (With Intelligent Key)

Diode M77

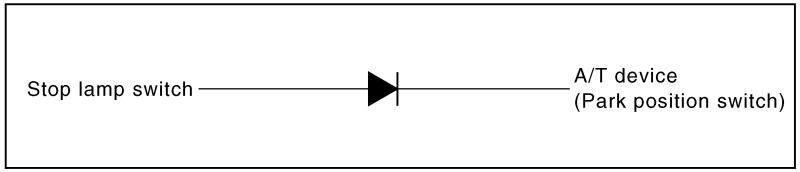

TKIM0497E

ENGINE ROOM HARNESS

Engine Compartment

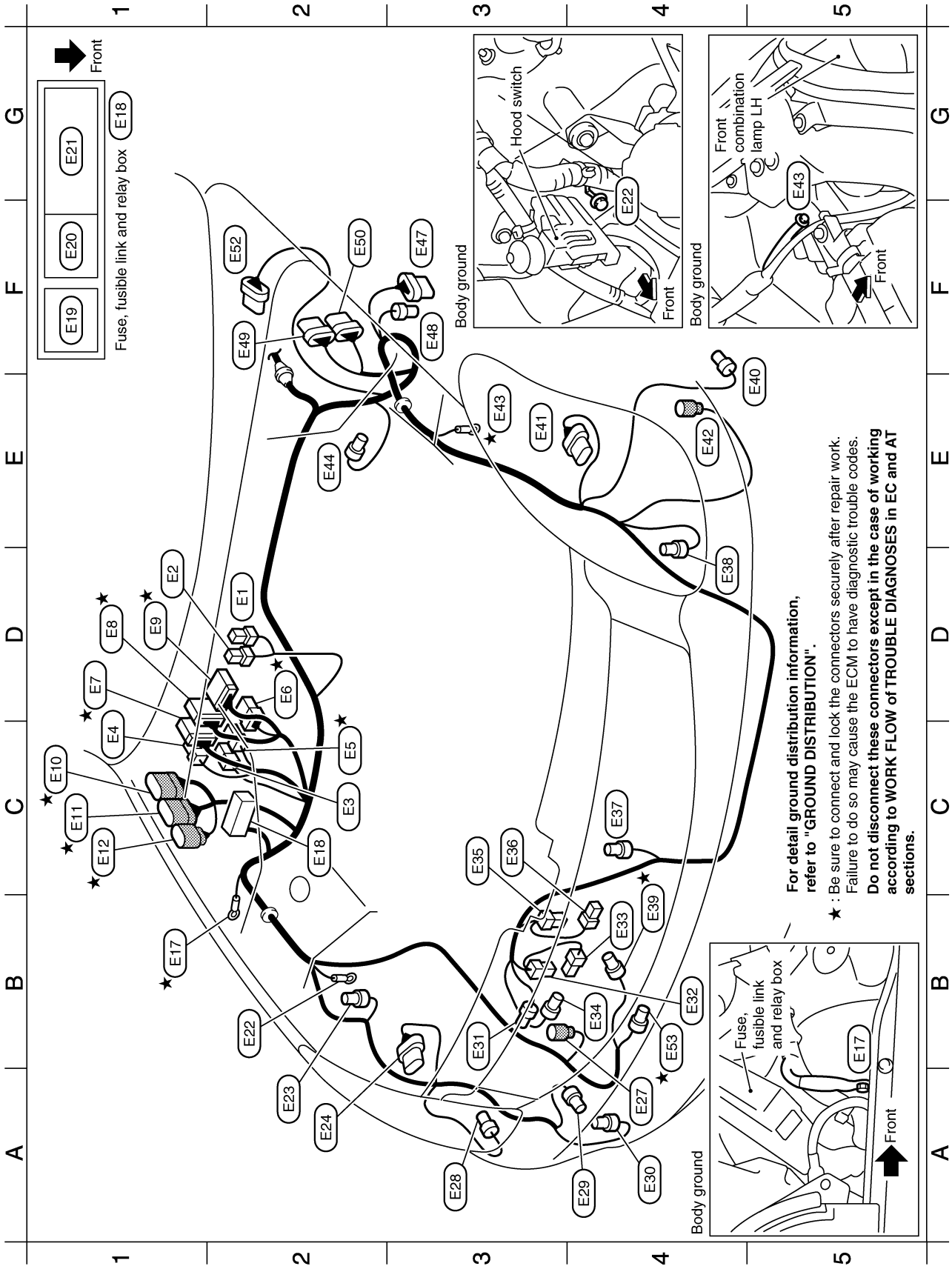

TKIM0806E

D2	E1	B/2	:	Fusible link holder
D1	E2	GY/2	:	Fusible link holder
C2	E3	B/2	:	IPDM E/R (Intelligent power distribution module engine room)
C1	E4	W/4	:	IPDM E/R (Intelligent power distribution module engine room)
C2 ★	E5	B/4	:	IPDM E/R (Intelligent power distribution module engine room)
D2 ★	E6	W/6	:	IPDM E/R (Intelligent power distribution module engine room)
D1 ★	E7	GY/16	:	IPDM E/R (Intelligent power distribution module engine room)
D1 ★	E8	W/12	:	IPDM E/R (Intelligent power distribution module engine room)
D1 ★	E9	W/16	:	IPDM E/R (Intelligent power distribution module engine room)
C1 ★	E10	GY/9	:	To F1
C1 ★	E11	GY/10	:	To F2
C1 ★	E12	B/8	:	To F3
B1 ★	E17	—	:	Body ground
C2	E18	—	:	Fuse, fusible link and relay box
F1	E19	L/4	:	Back-up lamp relay (With A/T)
F1	E20	W/3	:	Horn relay
G1	E21	—	:	Fuse and fusible link block
B2	E22	—	:	Body ground
A2	E23	GY/2	:	Hood switch
A2	E24	B/8	:	Front combination lamp RH
A4	E27	GY/2	:	Front wheel sensor RH
A3	E28	DGY/2	:	Front side marker lamp RH
A4	E29	GY/2	:	Front washer pump
A4	E30	BR/2	:	Washer level sensor
B3	E31	B/3	:	Refrigerant pressure sensor
B4	E32	B/1	:	Horn (Low)
B4	E33	B/1	:	Horn (Low)
B4	E34	B/2	:	Ambient sensor
C3	E35	B/1	:	Horn (High)
C3	E36	B/1	:	Horn (High)
C4	E37	Y/2	:	Crash zone sensor
D4	E38	DGY/3	:	Intelligent Key warning buzzer (Engine room) (With Intelligent Key)
B4 ★	E39	GY/4	:	Cooling fan motor-1
E5	E40	DGY/2	:	Front side marker lamp LH
E3	E41	B/8	:	Front combination lamp LH
E4	E42	B/2	:	Front wheel sensor LH
E3 ★	E43	—	:	Body ground
E2	E44	GY/2	:	Brake fluid level switch
F3	E47	B/8	:	VDC relay box
F3	E48	B/2	:	VDC relay box
F2	E49	GY/8	:	VDC actuator
F2	E50	B/8	:	VDC actuator
F2	E52	GY/5	:	Front wiper motor
B4 ★	E53	GY/4	:	Cooling fan motor-2

★ : Be sure to connect and lock the connectors securely after repair work. Failure to do so may cause the ECM to have diagnostic trouble codes.

Do not disconnect these connectors except in the case of working according to WORK FLOW of TROUBLE DIAGNOSES in EC and AT sections.

TKIM0807E

Passenger Compartment

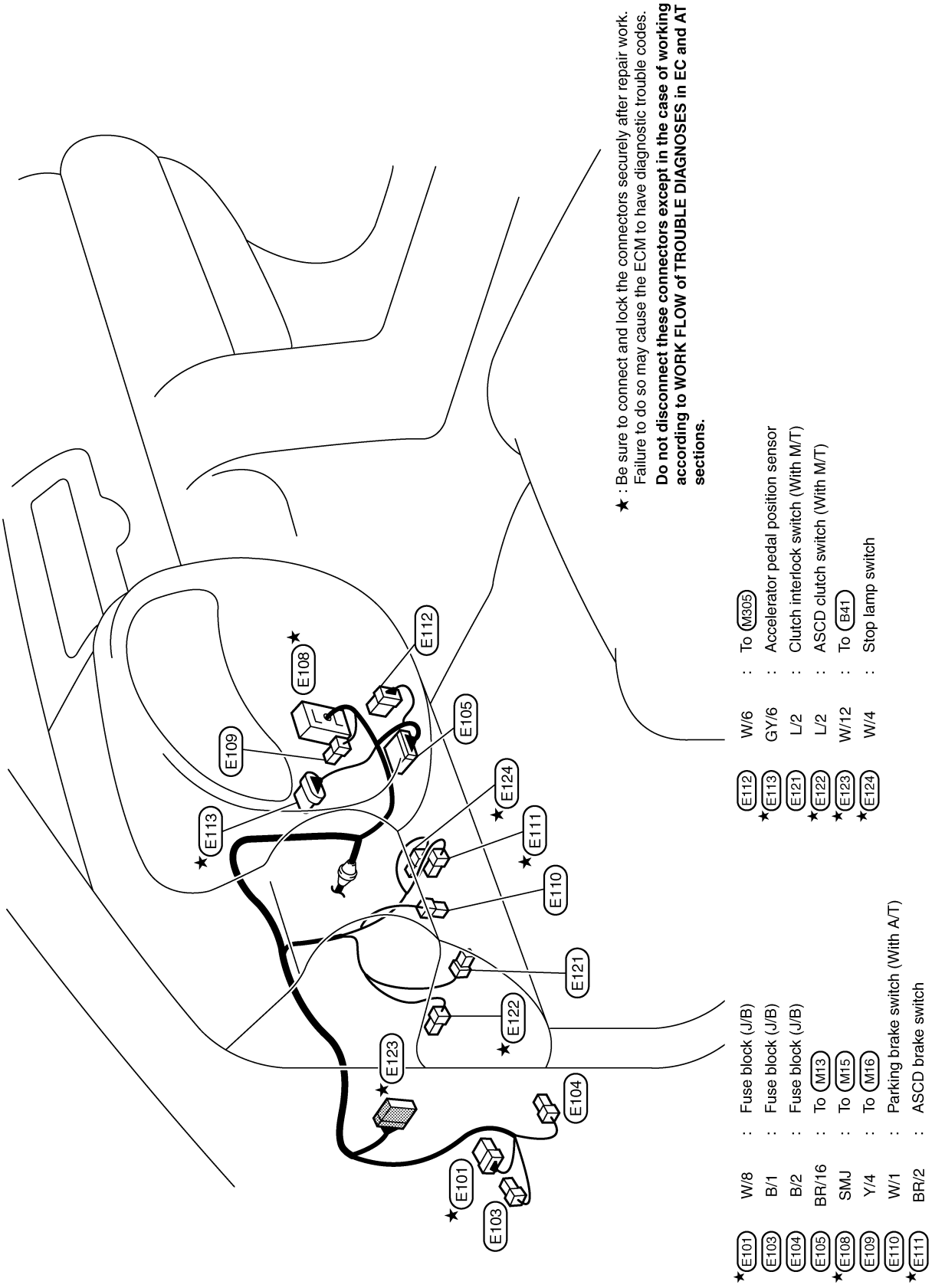

TKIM0808E

Battery Cable

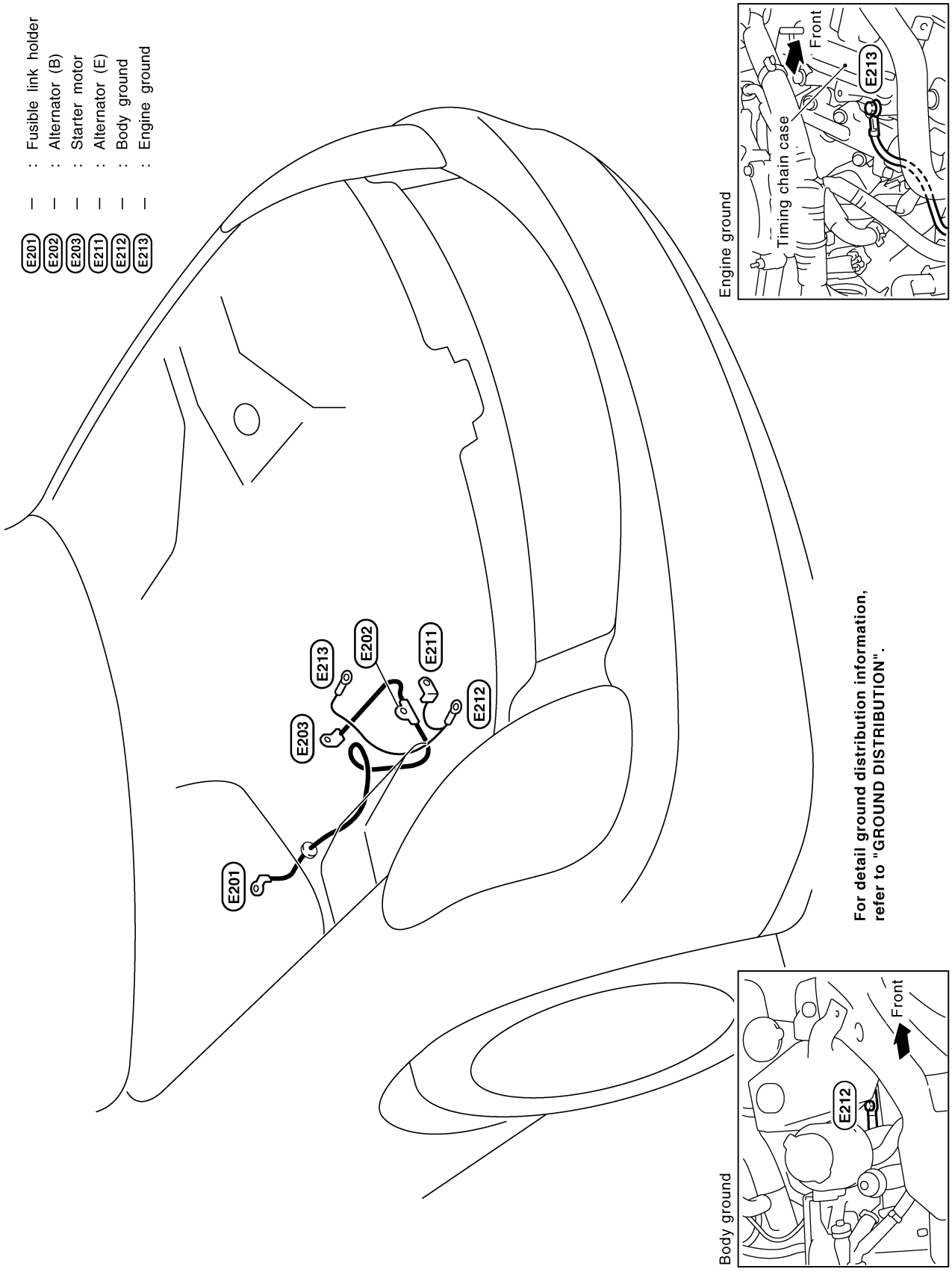

TKIM0334E

ENGINE CONTROL HARNESS

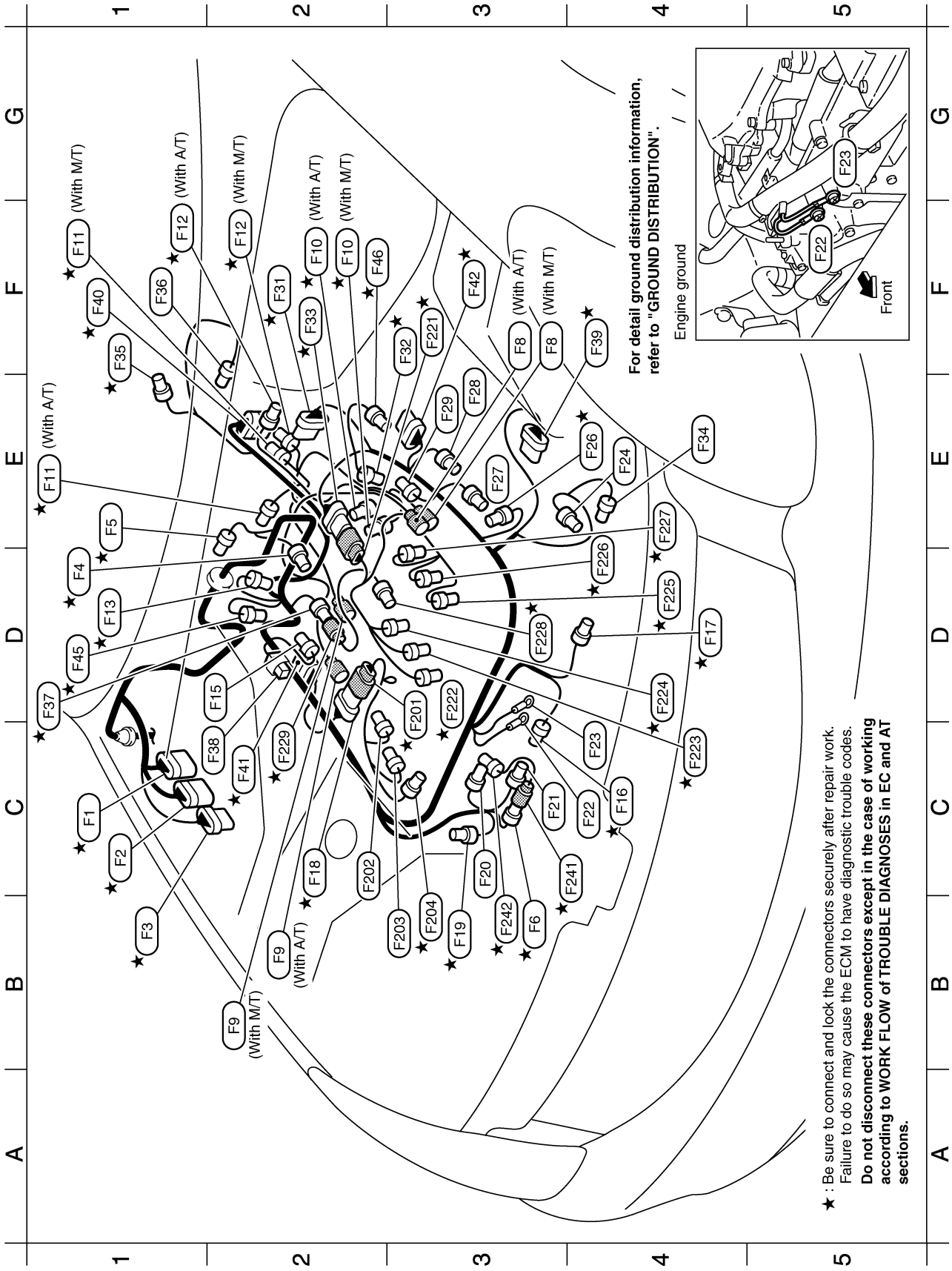

TKIM0809E

C1	★F1	GY/9	:	To E10
C1	★F2	GY/10	:	To E11
B1	★F3	B/8	:	To E12
D1	★F4	G/3	:	Camshaft position sensor (PHASE) (Bank 1)
E1	★F5	LGY/2	:	EVAP canister purge volume control solenoid valve
B3	★F6	BR/2	:	To F241 (With M/T)
F3	F8	DGY/2	:	Power steering solenoid valve (With RAS)
B2	F9	GY/1	:	Starter motor
F2	★F10	B/3	:	Crankshaft position sensor (POS)
E1,F1	★F11	B/4	:	Heated oxygen sensor 2 (Bank 1)
F1,F2	★F12	B/4	:	Heated oxygen sensor 2 (Bank 2)
D1	★F13	GY/2	:	Engine coolant temperature sensor
D2	F15	GY/3	:	Ignition coil No. 5 (With power transistor)
C4	★F16	G/4	:	Exhaust valve timing control magnet retarder (Bank 1) (With M/T)
D4	★F17	L/4	:	Exhaust valve timing control magnet retarder (Bank 2) (With M/T)
C2	★F18	B/6	:	To F201
B3	★F19	B/3	:	Power steering pressure sensor
C3	F20	GY/2	:	Alternator (S, L)
C3	F21	GY/1	:	Oil pressure switch
C4	F22	—	:	Engine ground (With A/T)
C4	F23	—	:	Engine ground
E4	F24	B/1	:	Compressor
E4	★F26	LGY/2	:	Intake valve timing control solenoid valve (Bank 2)
E3	F27	GY/3	:	Ignition coil No. 2 (With power transistor)
E3	F28	GY/3	:	Ignition coil No. 4 (With power transistor)
E3	F29	GY/3	:	Ignition coil No. 6 (With power transistor)
F2	★F31	DGY/6	:	Electric throttle control actuator
F3	★F32	B/3	:	Camshaft position sensor (PHASE) (Bank 2)
F2	★F33	GY/8	:	To F221
E4	F34	B/2	:	Compressor
F1	★F35	B/2	:	Park/Neutral position switch (With M/T)
F1	F36	B/2	:	Back-up lamp switch (With M/T)
D1	★F37	B/2	:	To F229
C2	F38	W/2	:	Condenser
F4	★F39	B/6	:	Mass air flow sensor
F1	★F40	DGY/10	:	A/T assembly (With A/T)
C2	★F41	B/6	:	Air fuel ratio (A/F) sensor 1 (Bank 1)
F3	★F42	B/6	:	Air fuel ratio (A/F) sensor 1 (Bank 2)
D1	★F45	B/3	:	Exhaust valve timing control position sensor (Bank 1) (With M/T)
F2	★F46	G/3	:	Exhaust valve timing control position sensor (Bank 2) (With M/T)

★ : Be sure to connect and lock the connectors securely after repair work. Failure to do so may cause the ECM to have diagnostic trouble codes.

Do not disconnect these connectors except in the case of working according to WORK FLOW of TROUBLE DIAGNOSES in EC and AT sections.

Engine control sub-harness-1

D3	★F201	L/6	:	To F18
C2	F202	GY/3	:	Ignition coil No. 3 (With power transistor)
B3	F203	GY/3	:	Ignition coil No. 1 (With power transistor)
B3	★F204	G/2	:	Intake valve timing control solenoid valve (Bank 1)

Engine control sub-harness-2

F3	★F221	G/8	:	To F33
D3	★F222	GY/2	:	Fuel injector No. 1
C4	★F223	GY/2	:	Fuel injector No. 3
D4	★F224	GY/2	:	Fuel injector No. 5
D4	★F225	GY/2	:	Fuel injector No. 2
D4	★F226	GY/2	:	Fuel injector No. 4
E4	★F227	GY/2	:	Fuel injector No. 6
D3	★F228	L/2	:	Knock sensor
C2	★F229	SB/2	:	To F37

Engine control sub-harness-3 (With M/T)

C4	★F241	BR/2	:	To F6
B3	★F242	GY/2	:	Engine oil temperature sensor

Passenger compartment

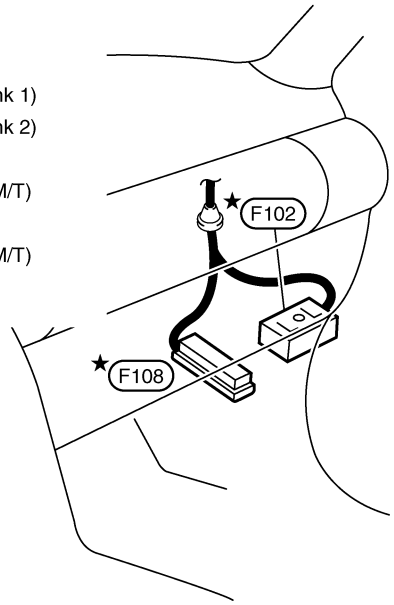

★F102	SMJ	:	To M72
★F108	SMJ	:	ECM

TKIM0810E

BODY HARNESS
Passenger Compartment

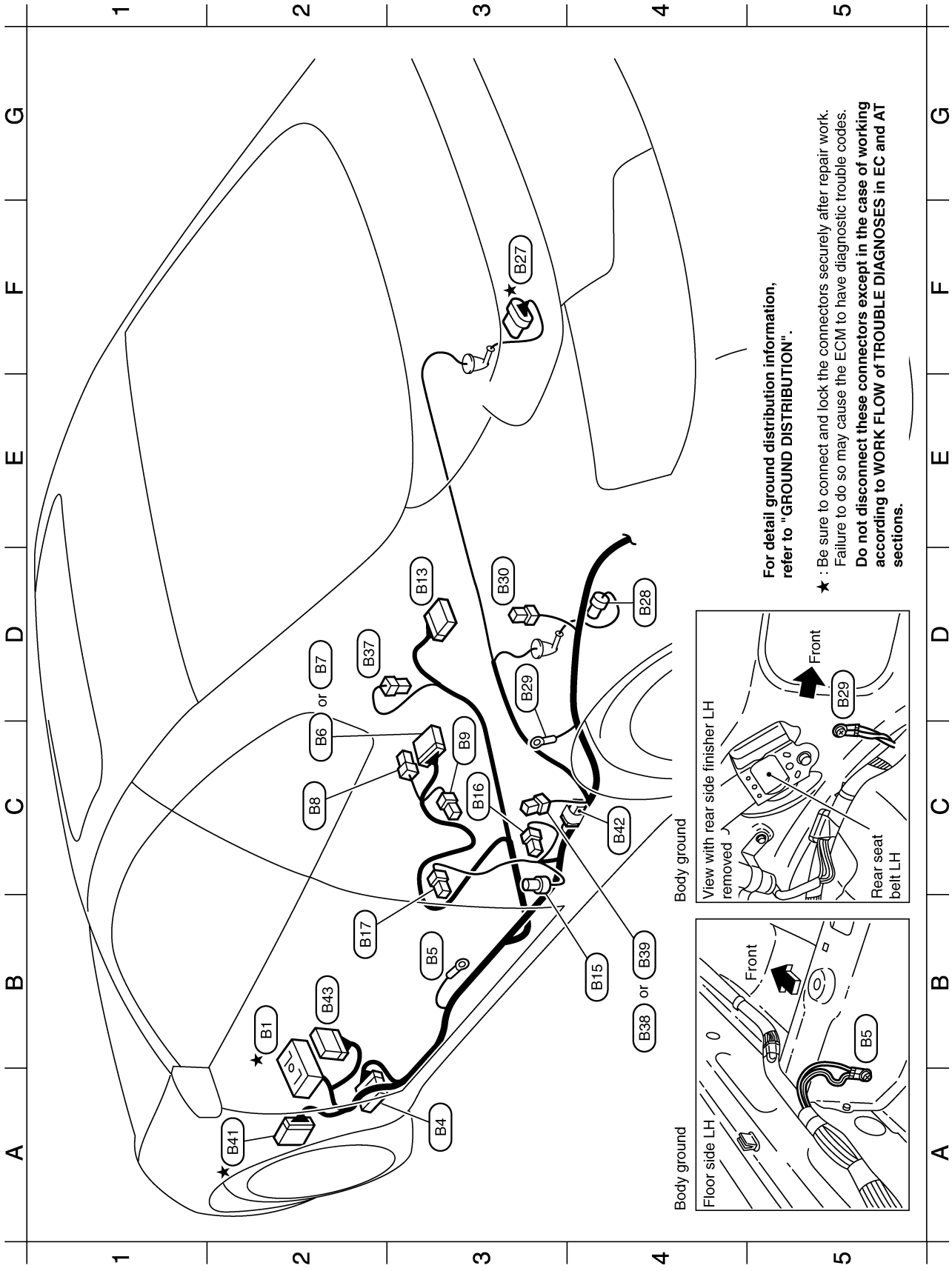

TKIM0811E

B2	★B1	SMJ	:	To M12
A3	B4	W/15	:	BCM (Body control module)
B3	B5	—	:	Body ground
C2	B6	W/12	:	Front power seat (Driver side) (Without automatic drive positioner)
D2	B7	W/16	:	Front power seat (Driver side) (With automatic drive positioner)
C2	B8	W/3	:	Seat belt buckle switch (Driver side)
C3	B9	Y/2	:	Front LH side air bag module
D3	B13	Y/12	:	Air bag diagnosis sensor unit
B4	B15	Y/2	:	LH side air bag (Satellite) sensor
C3	B16	Y/2	:	Front LH seat belt pre-tensioner
B2	B17	W/3	:	Driver side door switch
F3	★B27	GY/5	:	Fuel level sensor unit and fuel pump
D4	B28	GY/2	:	Fuel level sensor unit (Sub)
D3	B29	—	:	Body ground
D3	B30	Y/2	:	LH side curtain air bag module
D2	B37	B/1	:	Parking brake switch (With M/T)
B4	B38	W/2	:	Rear speaker LH (Without BOSE system)
B4	B39	BR/2	:	Rear speaker LH (With BOSE system)
A2	★B41	W/12	:	To E123
C4	B42	W/2	:	Condenser
B2	B43	W/12	:	To M43 (With option connector for satellite radio system)

★ : Be sure to connect and lock the connectors securely after repair work. Failure to do so may cause the ECM to have diagnostic trouble codes.
Do not disconnect these connectors except in the case of working according to WORK FLOW of TROUBLE DIAGNOSES in EC and AT sections.

TKIM0812E

Trunk Room

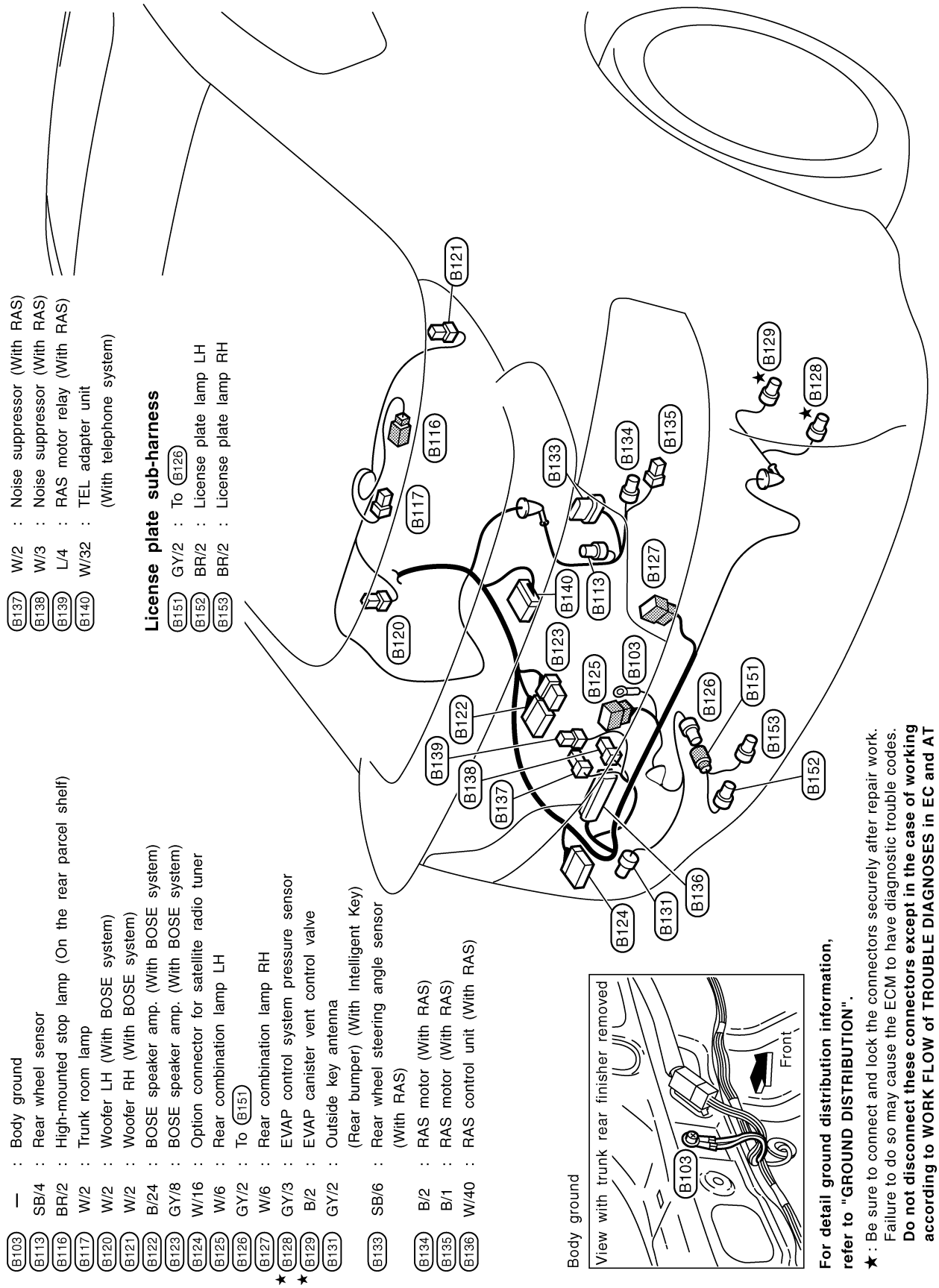
B103 — : Body ground
B113 SB/4 : Rear wheel sensor
B116 BR/2 : High-mounted stop lamp (On the rear parcel shelf)
B117 W/2 : Trunk room lamp
B120 W/2 : Woofer LH (With BOSE system)
B121 W/2 : Woofer RH (With BOSE system)
B122 B/24 : BOSE speaker amp. (With BOSE system)
B123 GY/8 : BOSE speaker amp. (With BOSE system)
B124 W/16 : Option connector for satellite radio tuner
B125 W/6 : Rear combination lamp LH
B126 GY/2 : To B151
B127 W/6 : Rear combination lamp RH
★ B128 GY/3 : EVAP control system pressure sensor
★ B129 B/2 : EVAP canister vent control valve
B131 GY/2 : Outside key antenna (Rear bumper) (With Intelligent Key)
B133 SB/6 : Rear wheel steering angle sensor (With RAS)
B134 B/2 : RAS motor (With RAS)
B135 B/1 : RAS motor (With RAS)
B136 W/40 : RAS control unit (With RAS)
B137 W/2 : Noise suppressor (With RAS)
B138 W/3 : Noise suppressor (With RAS)
B139 L/4 : RAS motor relay (With RAS)
B140 W/32 : TEL adapter unit (With telephone system)
License plate sub-harness
B151 GY/2 : To B126
B152 BR/2 : License plate lamp LH
B153 BR/2 : License plate lamp RH
Body ground
View with trunk rear finisher removed
Front
For detail ground distribution information, refer to "GROUND DISTRIBUTION".
★ : Be sure to connect and lock the connectors securely after repair work. Failure to do so may cause the ECM to have diagnostic trouble codes.
Do not disconnect these connectors except in the case of working according to WORK FLOW of TROUBLE DIAGNOSES in EC and AT sections.
TKIM0505E

BODY NO. 2 HARNESS

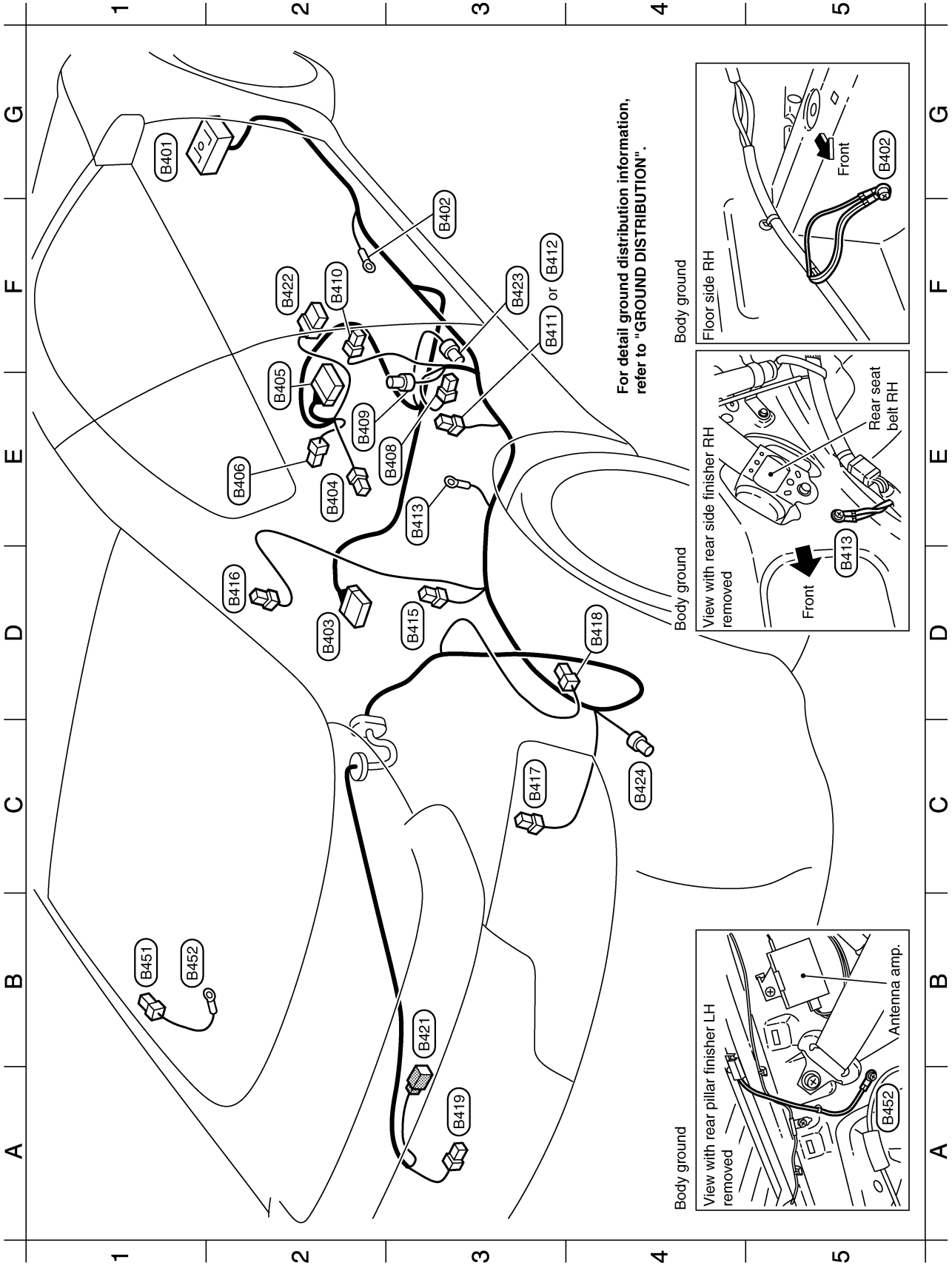

TKIM0813E

G1	B401	SMJ	:	To M87
F3	B402	—	:	Body ground
D2	B403	Y/12	:	Air bag diagnosis sensor unit
E2	B404	Y/2	:	Front RH side air bag module
E2	B405	W/12	:	Front power seat (Passenger side)
E2	B406	W/3	:	Seat belt buckle switch (Passenger side)
E3	B408	Y/2	:	Front RH seat belt pre-tensioner
E2	B409	Y/2	:	RH side air bag (Satellite) sensor
F2	B410	W/3	:	Passenger side door switch
F3	B411	W/2	:	Rear speaker RH (Without BOSE system)
F3	B412	BR/2	:	Rear speaker RH (With BOSE system)
E3	B413	—	:	Body ground
D3	B415	Y/2	:	RH side curtain air bag module
D2	B416	W/1	:	Condenser
C3	B417	BR/6	:	Rear window defogger relay
D4	B418	W/4	:	Fuel lid lock actuator
A3	B419	W/3	:	Trunk lid lock assembly
B3	B421	BR/2	:	High-mounted stop lamp (In the rear spoiler)
F2	B422	W/8	:	Occupant classification system control unit (Via sub-harness)
F3	B423	B/3	:	Belt tension sensor
C4	B424	GY/2	:	Inside key antenna (Trunk room) (With Intelligent Key)

Body sub-harness

B1	B451	B/1	:	Rear window defogger (-)
B1	B452	—	:	Body ground

TKIM0814E

ROOM LAMP HARNESS

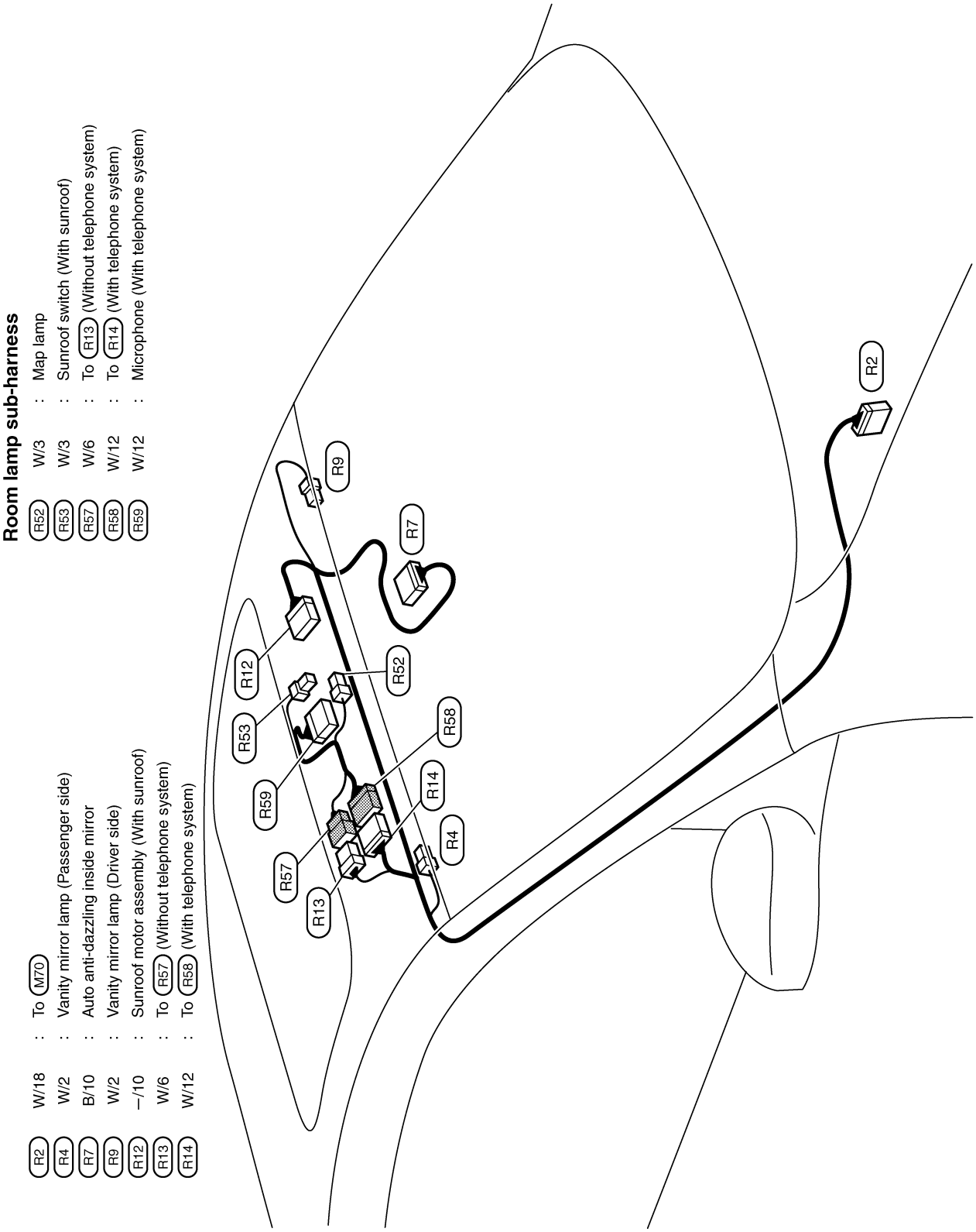

TKIM0815E

DOOR HARNESS

Driver Side Door

D1	SMJ	:	To M11
D2	W/8	:	Door mirror (Driver side)
D3	BR/2	:	Tweeter (Driver side)
D4	W/2	:	Driver door speaker (Without BOSE system)
D7	W/16	:	Power window main switch
D9	W/6	:	Driver side power window motor
D10	W/2	:	Step lamp (Driver side)
D14	BR/2	:	Driver door speaker (With BOSE system)
D15	B/6	:	Driver side door lock assembly
D16	L/2	:	Door request switch (Driver side) (With Intelligent Key)
D17	GY/2	:	Outside key antenna (Driver side) (With Intelligent Key)

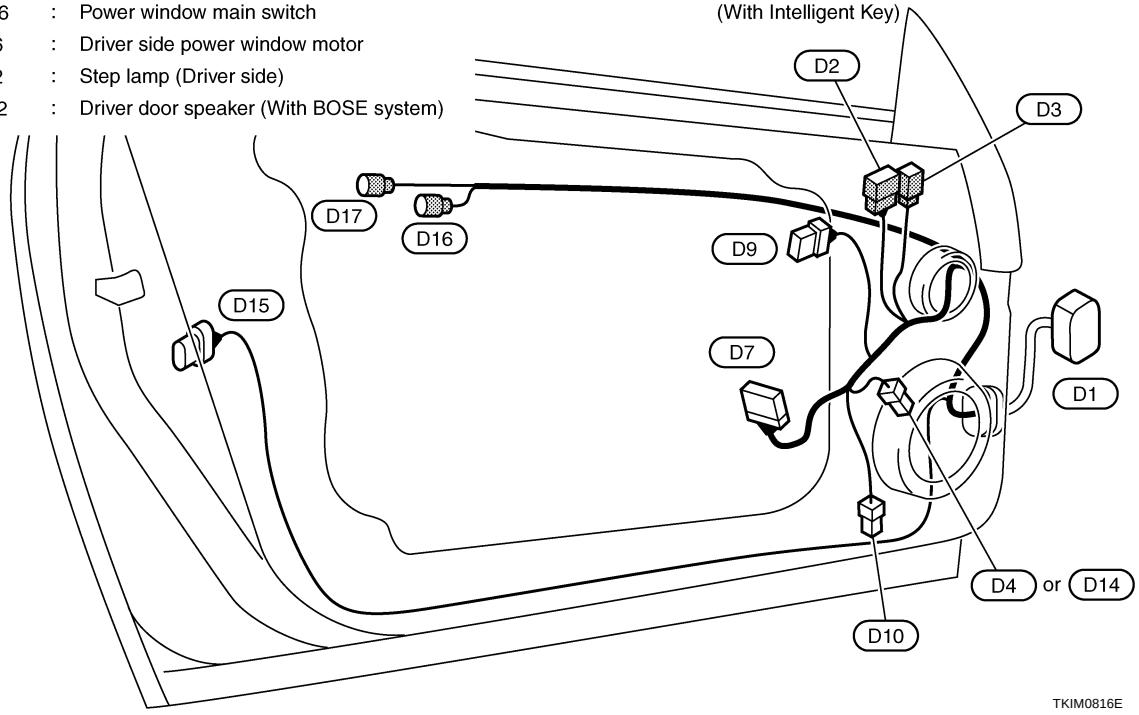

TKIM0816E

Passenger Side Door

D31	SMJ	:	To M74
D32	W/8	:	Door mirror (Passenger side)
D33	BR/2	:	Tweeter (Passenger side)
D34	W/2	:	Passenger door speaker (Without BOSE system)
D38	W/6	:	Passenger side power window motor
D39	W/2	:	Step lamp (Passenger side)
D42	BR/2	:	Passenger door speaker (With BOSE system)
D43	W/16	:	Power window sub-switch
D44	B/6	:	Passenger side door lock assembly
D45	L/2	:	Door request switch (Passenger side) (With Intelligent Key)
D46	GY/2	:	Outside key antenna (Passenger side) (With Intelligent Key)

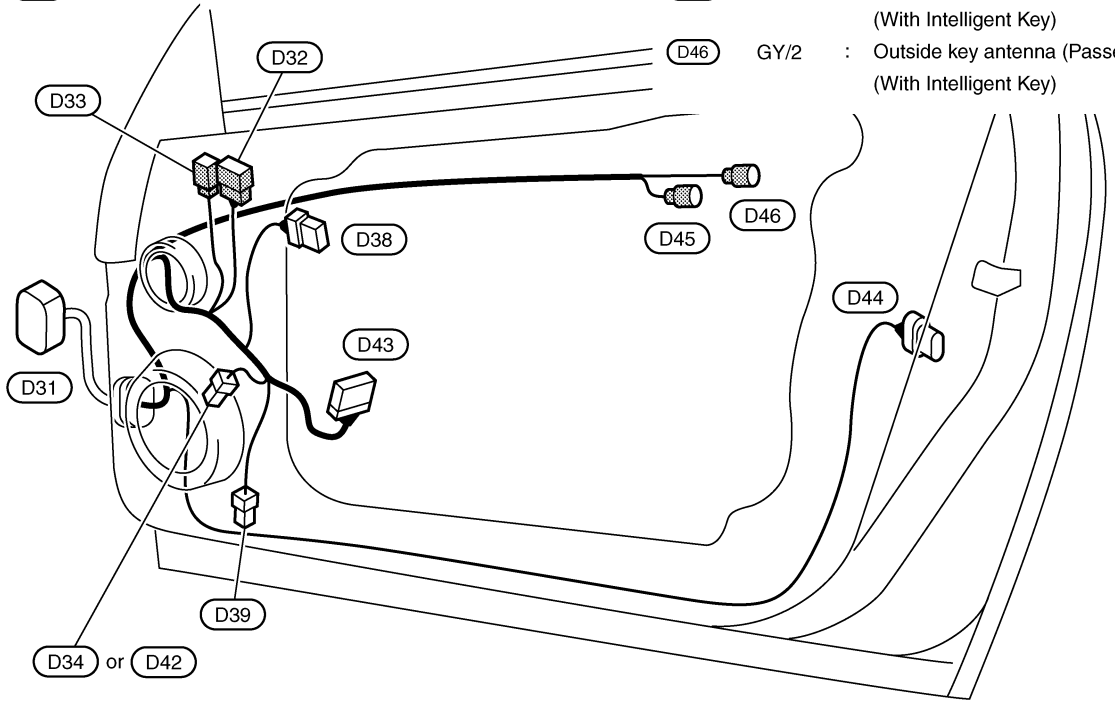

TKIM0817E

Wiring Diagram Codes (Cell Codes)

NKS000QR

Use the chart below to find out what each wiring diagram code stands for.
Refer to the wiring diagram code in the alphabetical index to find the location (page number) of each wiring diagram.

Code	Section	Wiring Diagram Name
A/C	ATC	Air Conditioner
AF1B1	EC	Air Fuel Ratio Sensor 1 Bank 1
AF1B2	EC	Air Fuel Ratio Sensor 1 Bank 2
AF1HB1	EC	Air Fuel Ratio Sensor 1 Heater Bank 1
AF1HB2	EC	Air Fuel Ratio Sensor 1 Heater Bank 2
APPS1	EC	Accelerator Pedal Position Sensor
APPS2	EC	Accelerator Pedal Position Sensor
APPS3	EC	Accelerator Pedal Position Sensor
ASC/BS	EC	Automatic Speed Control Device (ASCD) Brake Switch
ASC/SW	EC	Automatic Speed Control Device (ASCD) Steering Switch
ASCBOF	EC	Automatic Speed Control Device (ASCD) Brake Switch
ASCIND	EC	Automatic Speed Control Device (ASCD) Indicator
AT/IND	DI	A/T Indicator Lamp
AUDIO	AV	Audio
AUT/DP	SE	Automatic Drive Positioner
AUTO/L	LT	Automatic Light System
BACK/L	LT	Back-Up Lamp
BRK/SW	EC	Brake Switch
CAN	AT	CAN Communication Line
CAN	EC	CAN Communication Line
CAN	LAN	CAN System
CHARGE	SC	Charging System
CHIME	DI	Warning Chime
CIGAR	WW	Cigarette Lighter
COMBSW	LT	Combination Switch
COMM	AV	Audio Visual Communication Line
COMPAS	DI	Compass and Thermometer
COOL/F	EC	Cooling Fan Control
D/LOCK	BL	Power Door Lock
DEF	GW	Rear Window Defogger
DTRL	LT	Headlamp - With Daytime Light System
ECM/PW	EC	ECM Power Supply for Back-Up
ECTS	EC	Engine Coolant Temperature Sensor
ETC1	EC	Electric Throttle Control Function
ETC2	EC	Electric Throttle Control Motor Relay
ETC3	EC	Electric Throttle Control Motor
EVCB1	EC	Exhaust Valve Timing Control Magnet Retarder (Bank 1)
EVCB2	EC	Exhaust Valve Timing Control Magnet Retarder (Bank 2)
EVCSB1	EC	Exhaust Valve Timing Control Position Sensor (Bank 1)
EVCSB2	EC	Exhaust Valve Timing Control Position Sensor (Bank 2)
F/FOG	LT	Front Fog Lamp

Code	Section	Wiring Diagram Name
F/PUMP	EC	Fuel Pump
FTS	AT	A/T Fluid Temperature Sensor Circuit
FTTS	EC	Fuel Tank Temperature Sensor
FUELB1	EC	Fuel Injection System Function (Bank 1)
FUELB2	EC	Fuel Injection System Function (Bank 2)
H/LAMP	LT	Headlamp
H/PHON	AV	Hands Free Telephone
HORN	WW	Horn
HSEAT	SE	Heated Seat
I/KEY	BL	Intelligent Key System
I/MIRR	GW	Inside Mirror (Auto Anti-Dazzling Mirror)
IATS	EC	Intake Air Temperature Sensor
IGNSYS	EC	Ignition System
ILL	LT	Illumination
INJECT	EC	Injector
IVCB1	EC	Intake Valve Timing Control Solenoid Valve Bank 1
IVCB2	EC	Intake Valve Timing Control Solenoid Valve Bank 2
KEYLES	BL	Remote Keyless Entry System
KS	EC	Knock Sensor
MAFS	EC	Mass Air Flow Sensor
MAIN	AT	Main Power Supply and Ground Circuit
MAIN	EC	Main Power Supply and Ground Circuit
METER	DI	Speedometer, Tachometer, Temp. and Fuel Gauges
MIL/DL	EC	MIL & Data Link Connector
MIRROR	GW	Door Mirror
MMSW	AT	Manual Mode Switch
NATS	BL	Nissan Anti-Theft System
NAVI	AV	Navigation System
NONDTC	AT	Non-Detective Items
O2H2B1	EC	Heated Oxygen Sensor 2 Heater Bank 1
O2H2B2	EC	Heated Oxygen Sensor 2 Heater Bank 2
O2S2B1	EC	Heated Oxygen Sensor 2 Bank 1
O2S2B2	EC	Heated Oxygen Sensor 2 Bank 2
P/SCKT	WW	Power Socket
PGC/V	EC	EVAP Canister Purge Volume Control Solenoid Valve
PHSB1	EC	Camshaft Position Sensor (PHASE) (Bank 1)
PHSB2	EC	Camshaft Position Sensor (PHASE) (Bank 2)
PNP/SW	AT	Park/Neutral Position Switch
PNP/SW	EC	Park/Neutral Position Switch
POS	EC	Crankshaft Position Sensor (CKPS) (POS)
POWER	PG	Power Supply Routing
PRE/SE	EC	EVAP Control System Pressure Sensor
PS/SEN	EC	Power Steering Pressure Sensor
RAS	STC	Rear Active Steer

Code	Section	Wiring Diagram Name
ROOM/L	LT	Interior Room Lamp
RP/SEN	EC	Refrigerant Pressure Sensor
SEAT	SE	Power Seat
SEN/PW	EC	Sensor Power Supply
SHIFT	AT	A/T Shift Lock System
SROOF	RF	Sunroof
SRS	SRS	Supplemental Restraint System
START	SC	Starting System
STOP/L	LT	Stop Lamp
STSIG	AT	Start Signal Circuit
T/WARN	WT	Low Tire Pressure Warning System
TAIL/L	LT	Parking, License and Tail Lamps
TILTEL	STC	Electric Tilt and Telescopic Steering
TLID	BL	Trunk Lid Opener
TPS1	EC	Throttle Position Sensor (Sensor 1)
TPS2	EC	Throttle Position Sensor (Sensor 2)
TPS3	EC	Throttle Position Sensor
TRNSCV	BL	Homelink Universal Transceiver
TURN	LT	Turn Signal and Hazard Warning Lamp
VDC	BRC	Vehicle Dynamics Control System
VEHSEC	BL	Vehicle Security System
VENT/V	EC	EVAP Canister Vent Control Valve
VSSA/T	AT	Vehicle Speed Sensor A/T (Revolution Sensor)
W/ANT	AV	Audio Antenna
WARN	DI	Warning Lamps
WINDOW	GW	Power Window
WIPER	WW	Front Wiper and Washer

ELECTRICAL UNITS LOCATION

PFP:25230

Electrical Units Location

NKS000QS

ENGINE COMPARTMENT

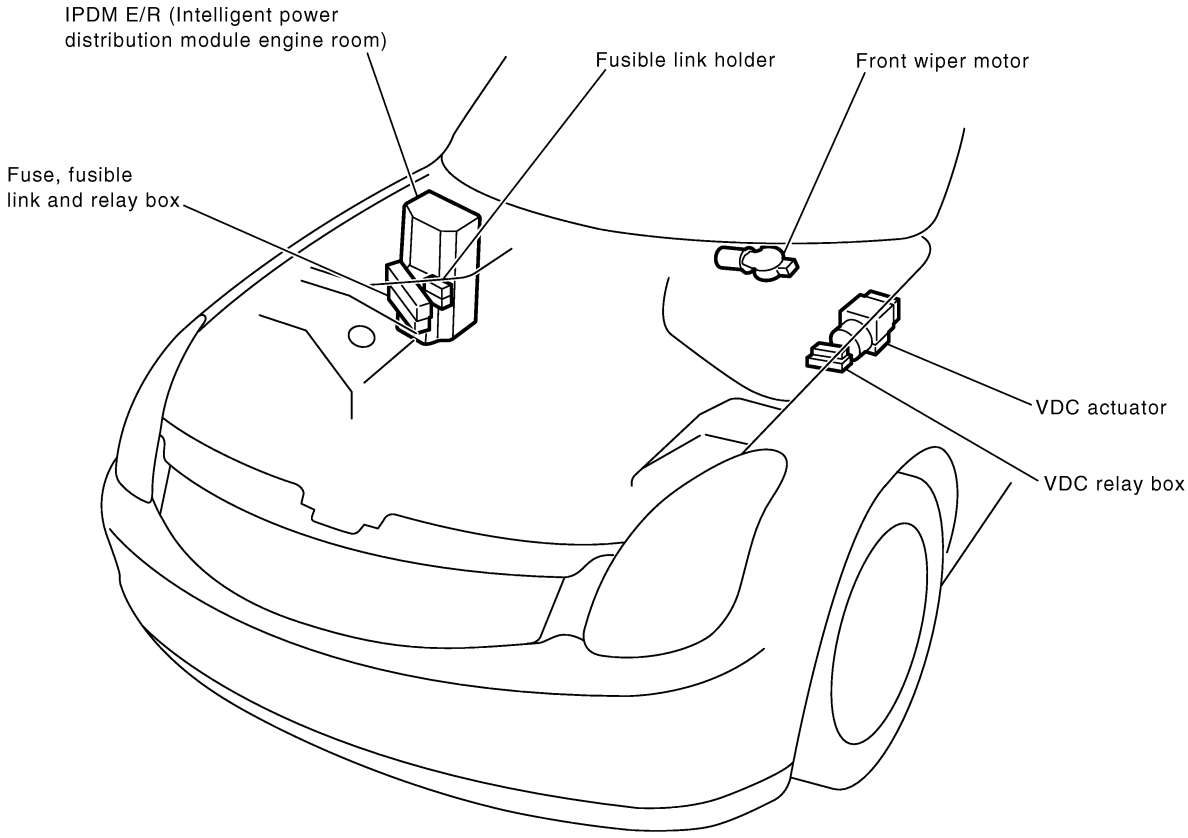

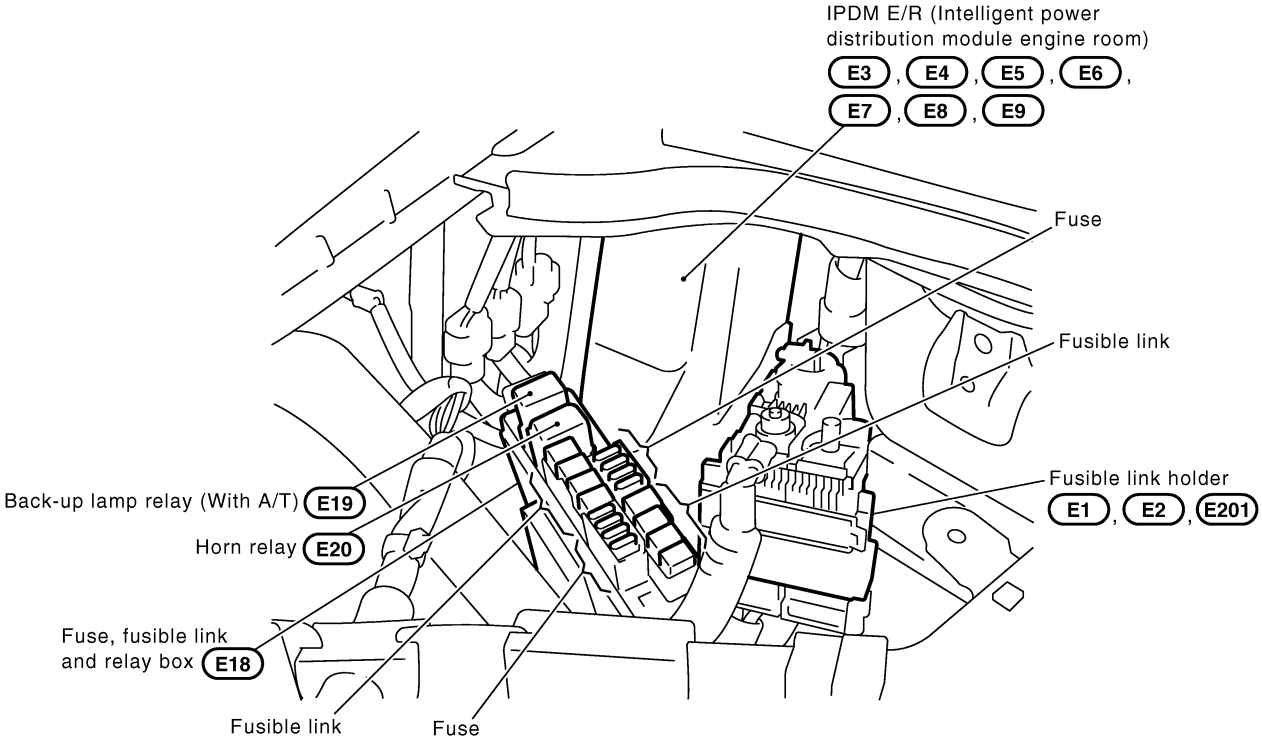

CKIM0581E

PASSENGER COMPARTMENT

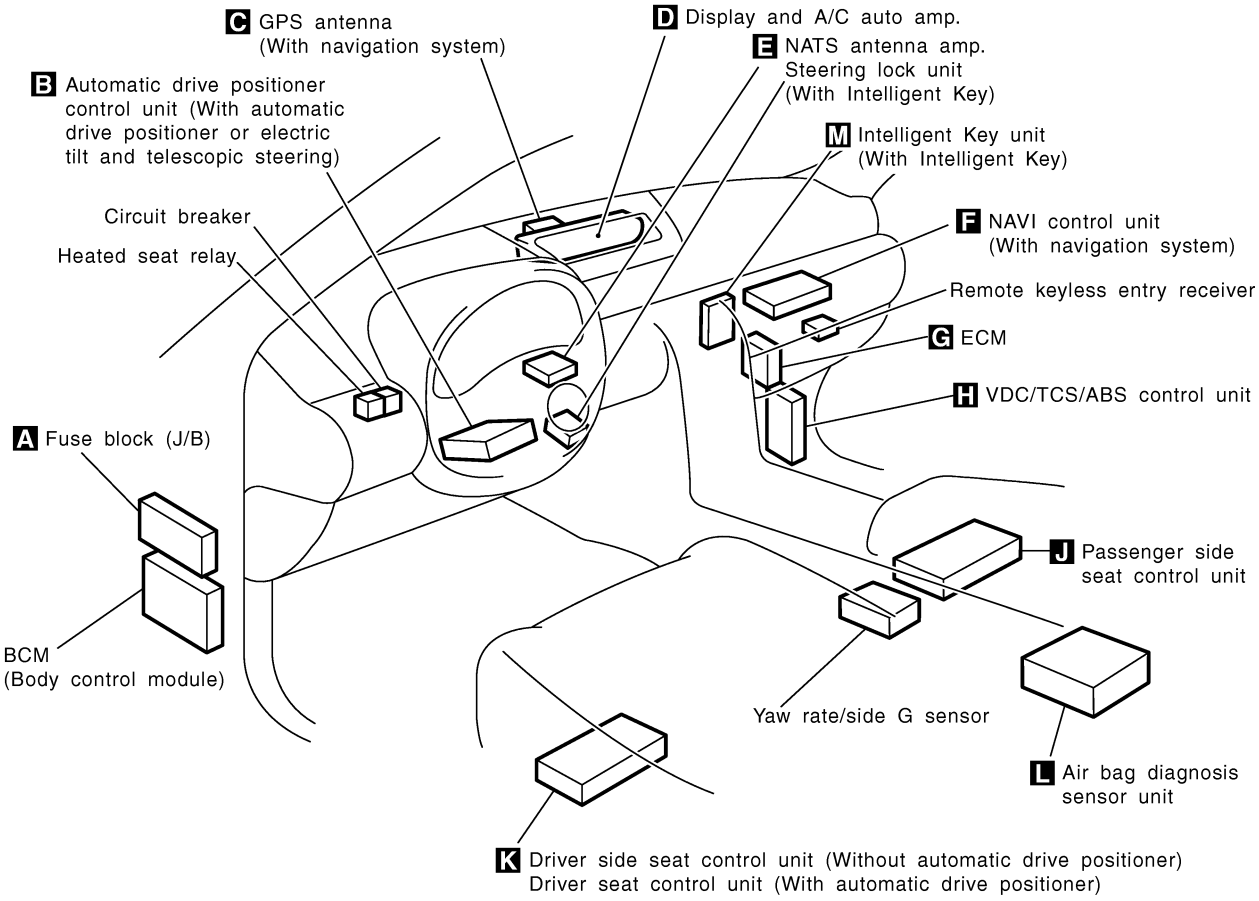

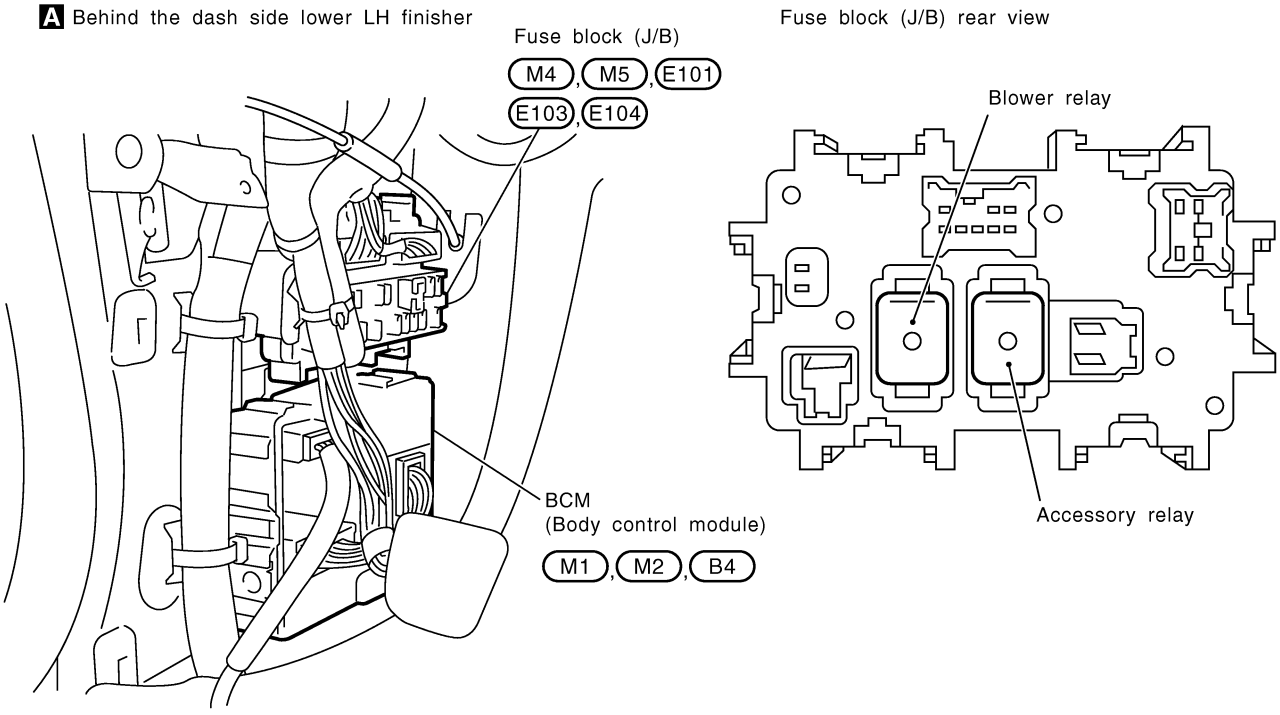

CKIM0738E

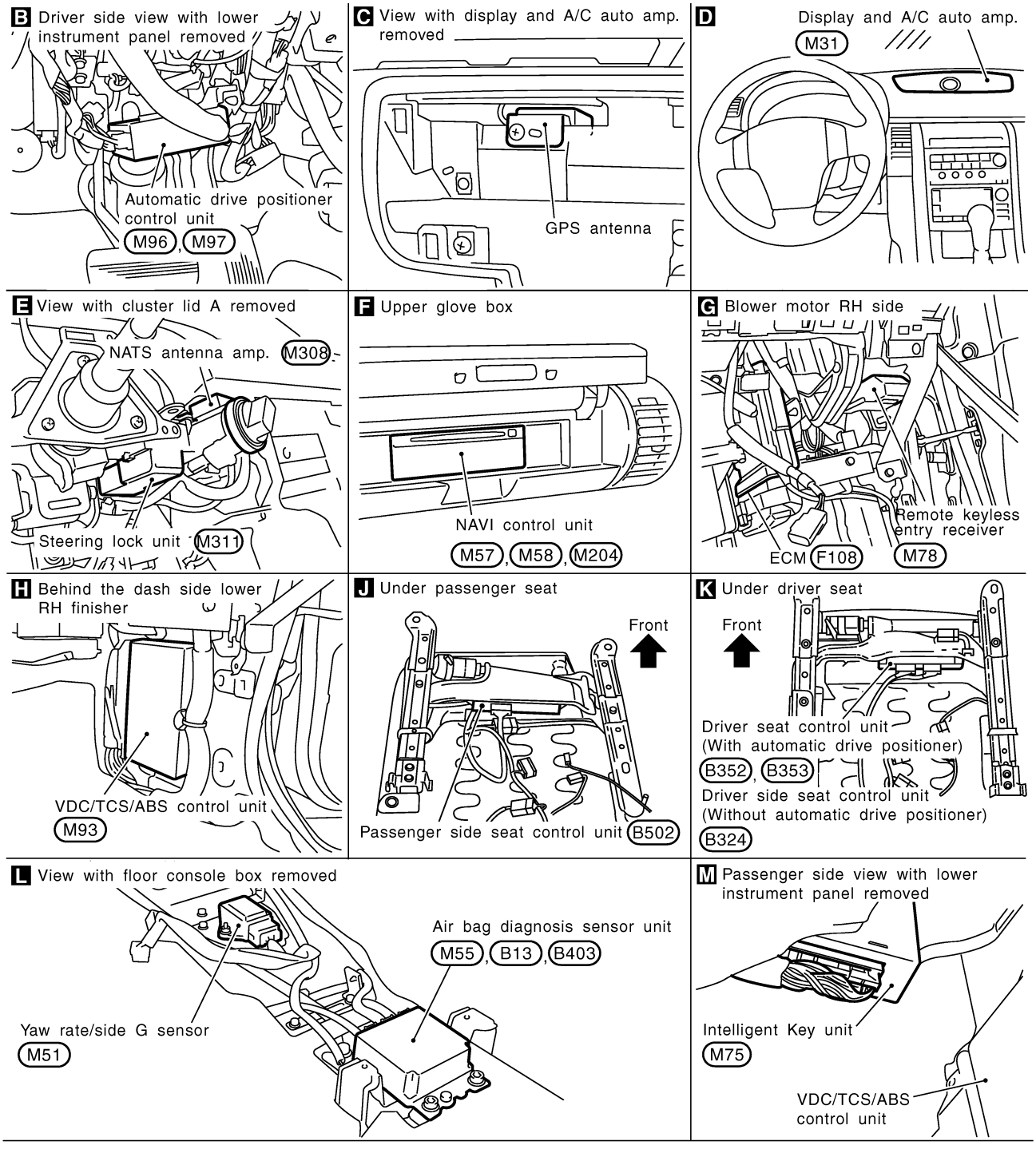
B Driver side view with lower instrument panel removed
Automatic drive positioner control unit
M96, M97
C View with display and A/C auto amp. removed
GPS antenna
D
Display and A/C auto amp.
M31
E View with cluster lid A removed
NATS antenna amp. M308
Steering lock unit M311
F Upper glove box
NAVI control unit
M57, M58, M204
G Blower motor RH side
Remote keyless entry receiver
ECM F108
M78
H Behind the dash side lower RH finisher
VDC/TCS/ABS control unit
M93
J Under passenger seat
Front
Passenger side seat control unit B502
K Under driver seat
Front
Driver seat control unit
(With automatic drive positioner)
B352, B353
Driver side seat control unit
(Without automatic drive positioner)
B324
L View with floor console box removed
Air bag diagnosis sensor unit
M55, B13, B403
Yaw rate/side G sensor
M51
M Passenger side view with lower instrument panel removed
Intelligent Key unit
M75
VDC/TCS/ABS control unit

CKIM0583E

LUGGAGE COMPARTMENT

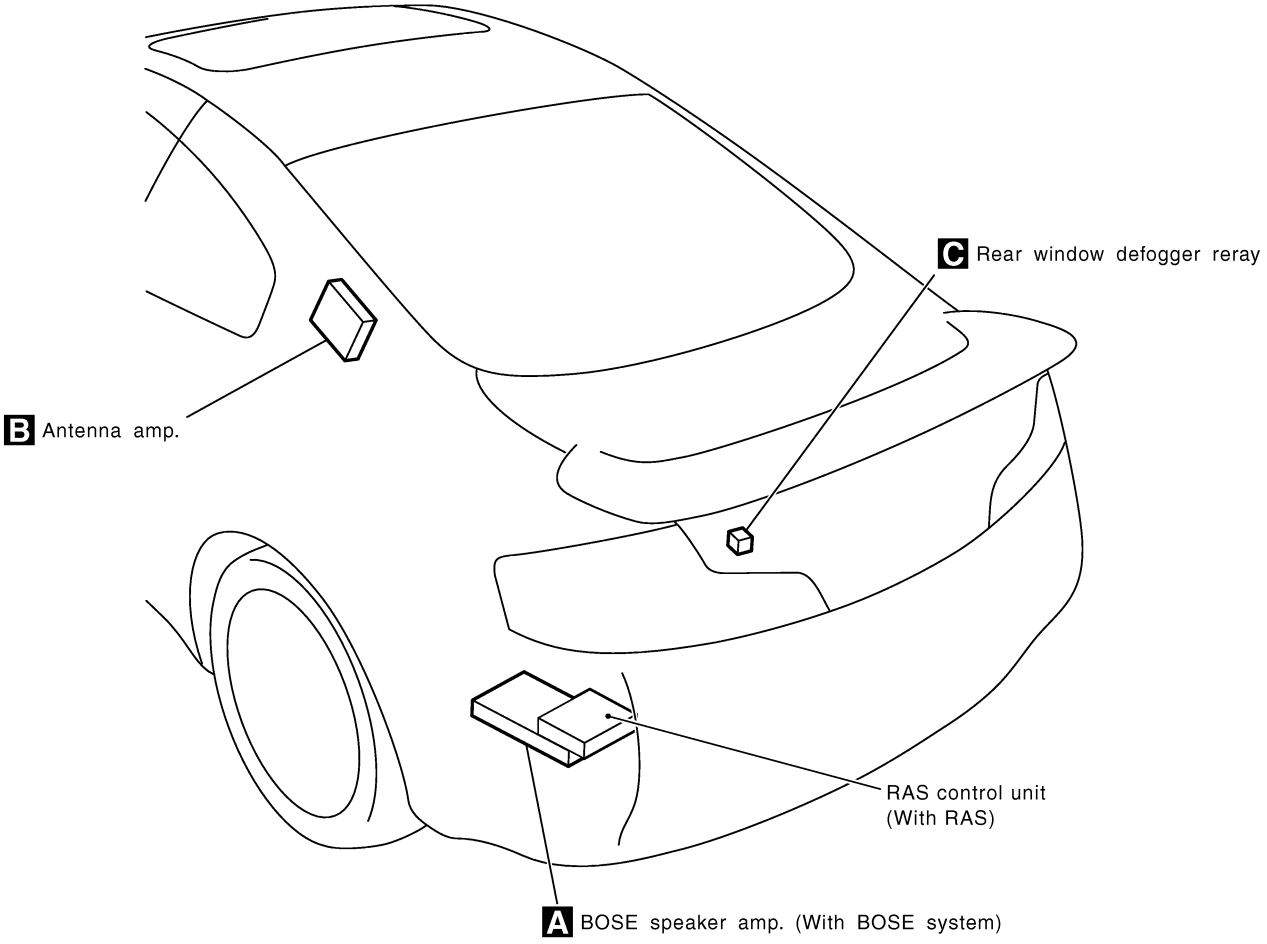

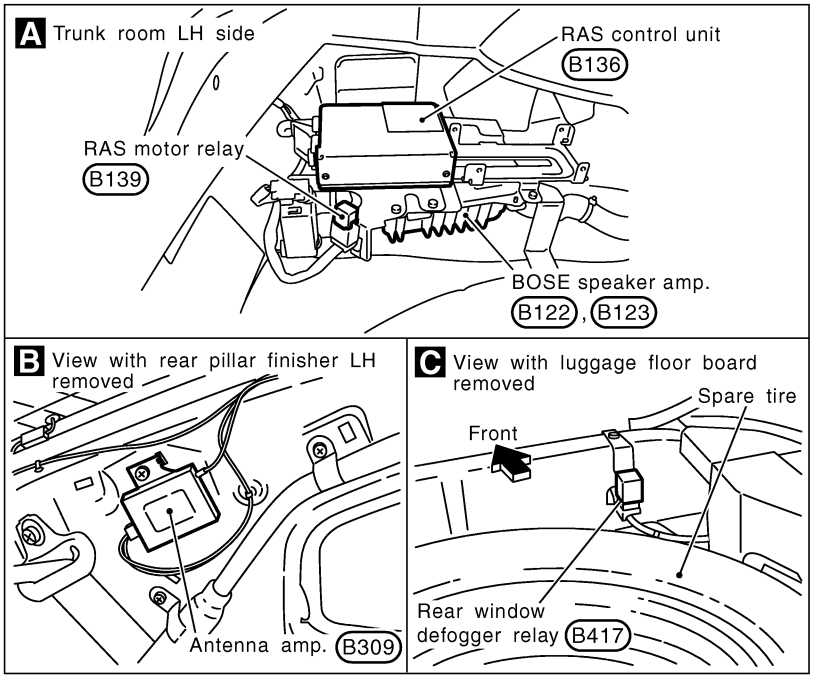

CKIM0584E

HARNESS CONNECTOR

PFP:00011

Description

NKS000QT

HARNESS CONNECTOR (TAB-LOCKING TYPE)

- The tab-locking type connectors help prevent accidental looseness or disconnection.
- The tab-locking type connectors are disconnected by pushing or lifting the locking tab(s). Refer to the figure below.

Refer to the next page for description of the slide-locking type connector.

CAUTION:

Never pull the harness or wires when disconnecting the connector.

[Example]

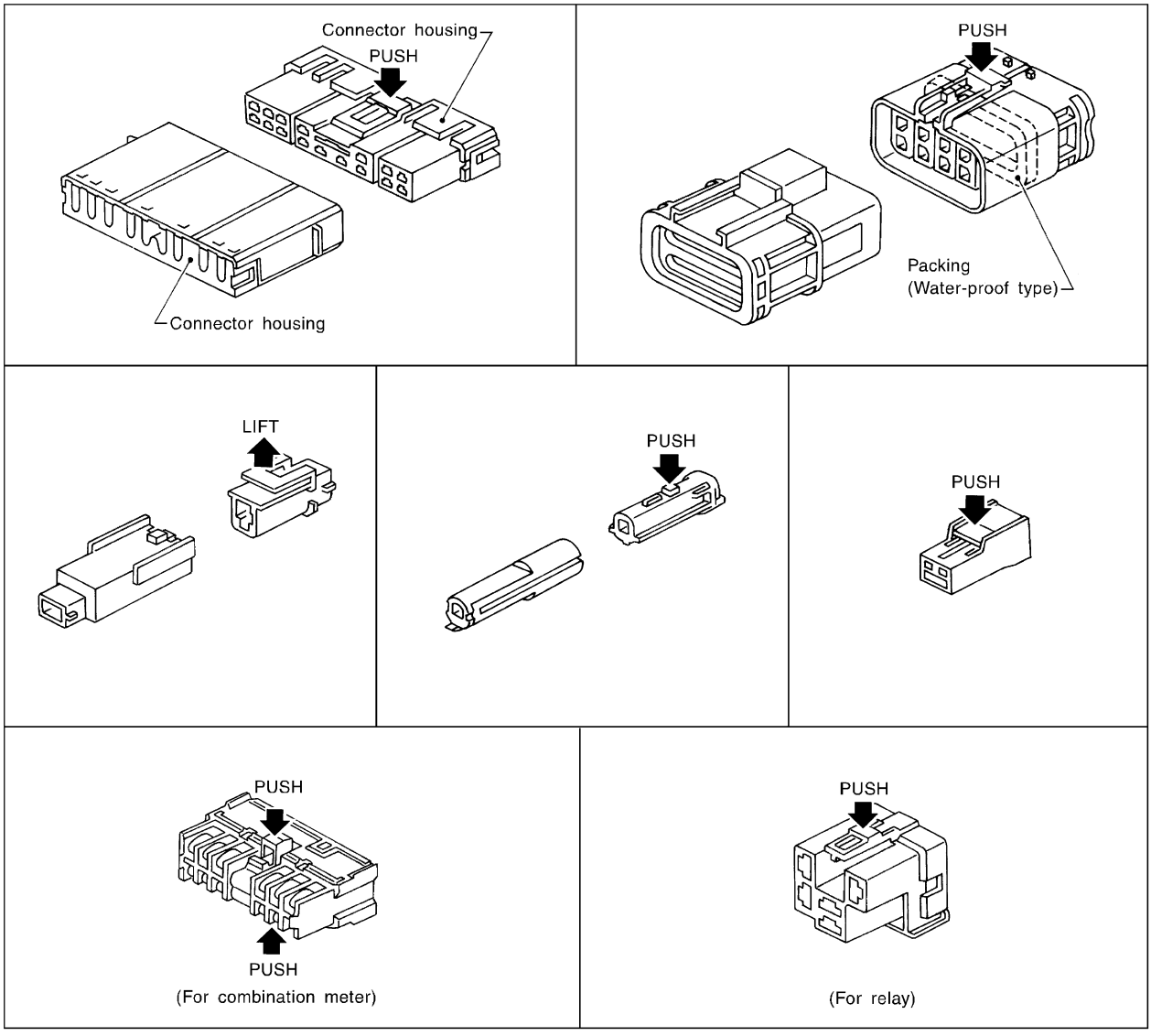

SEL769DA

HARNESS CONNECTOR (SLIDE-LOCKING TYPE)

- A new style slide-locking type connector is used on certain systems and components, especially those related to OBD.
- The slide-locking type connectors help prevent incomplete locking and accidental looseness or disconnection.
- The slide-locking type connectors are disconnected by pushing or pulling the slider. Refer to the figure below.

CAUTION:

- **Never pull the harness or wires when disconnecting the connector.**
- **Be careful not to damage the connector support bracket when disconnecting the connector.**

[Example]

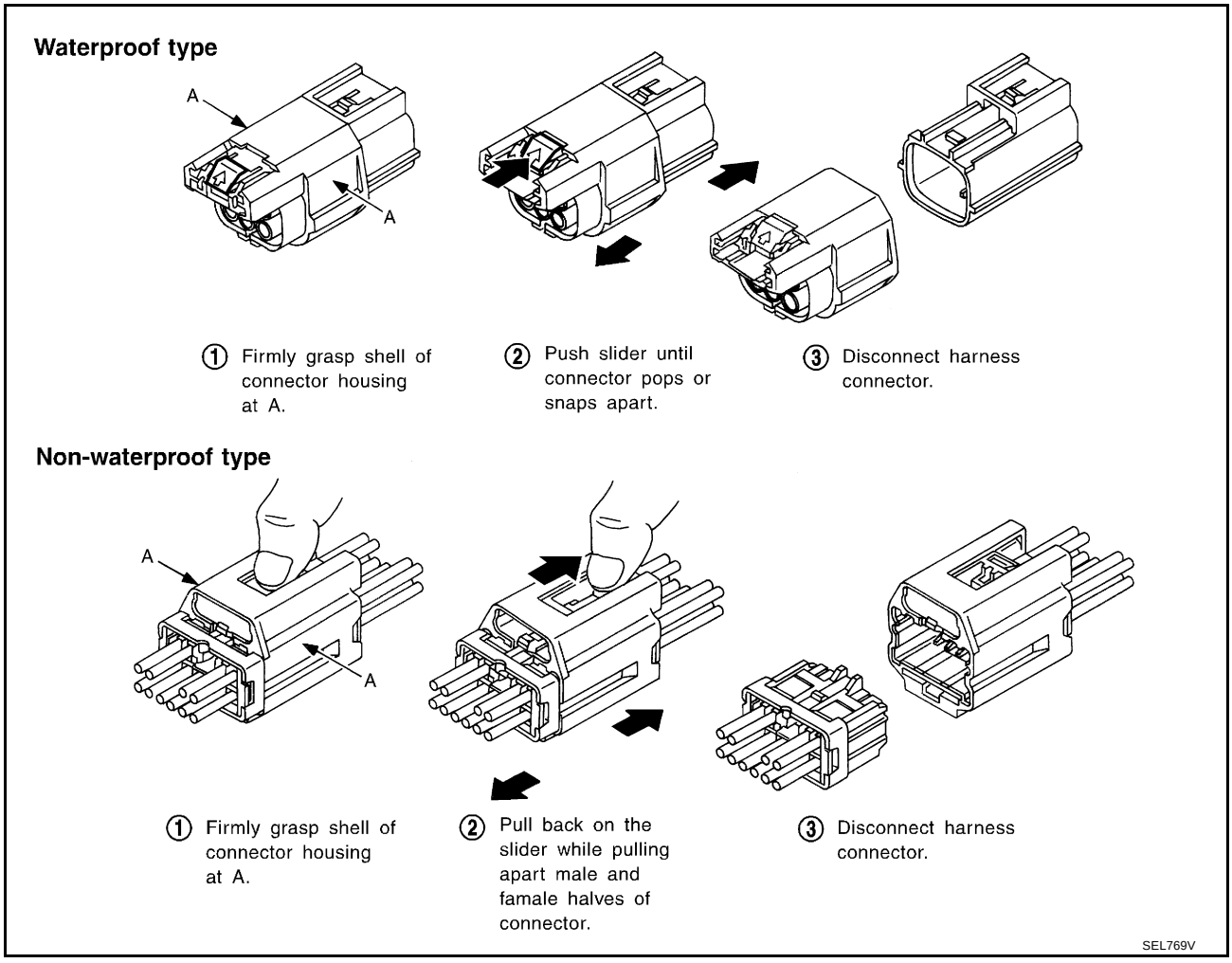

HARNESS CONNECTOR (LEVER LOCKING TYPE)

- Lever locking type harness connectors are used on certain control units and control modules such as ECM, ABS actuator and electric unit (control unit), etc.
- Lever locking type harness connectors are also used on super multiple junction (SMJ) connectors.
- Always confirm the lever is fully locked in place by moving the lever as far as it will go to ensure full connection.

CAUTION:

Always confirm the lever is fully released (loosened) before attempting to disconnect or connect these connectors to avoid damage to the connector housing or terminals.

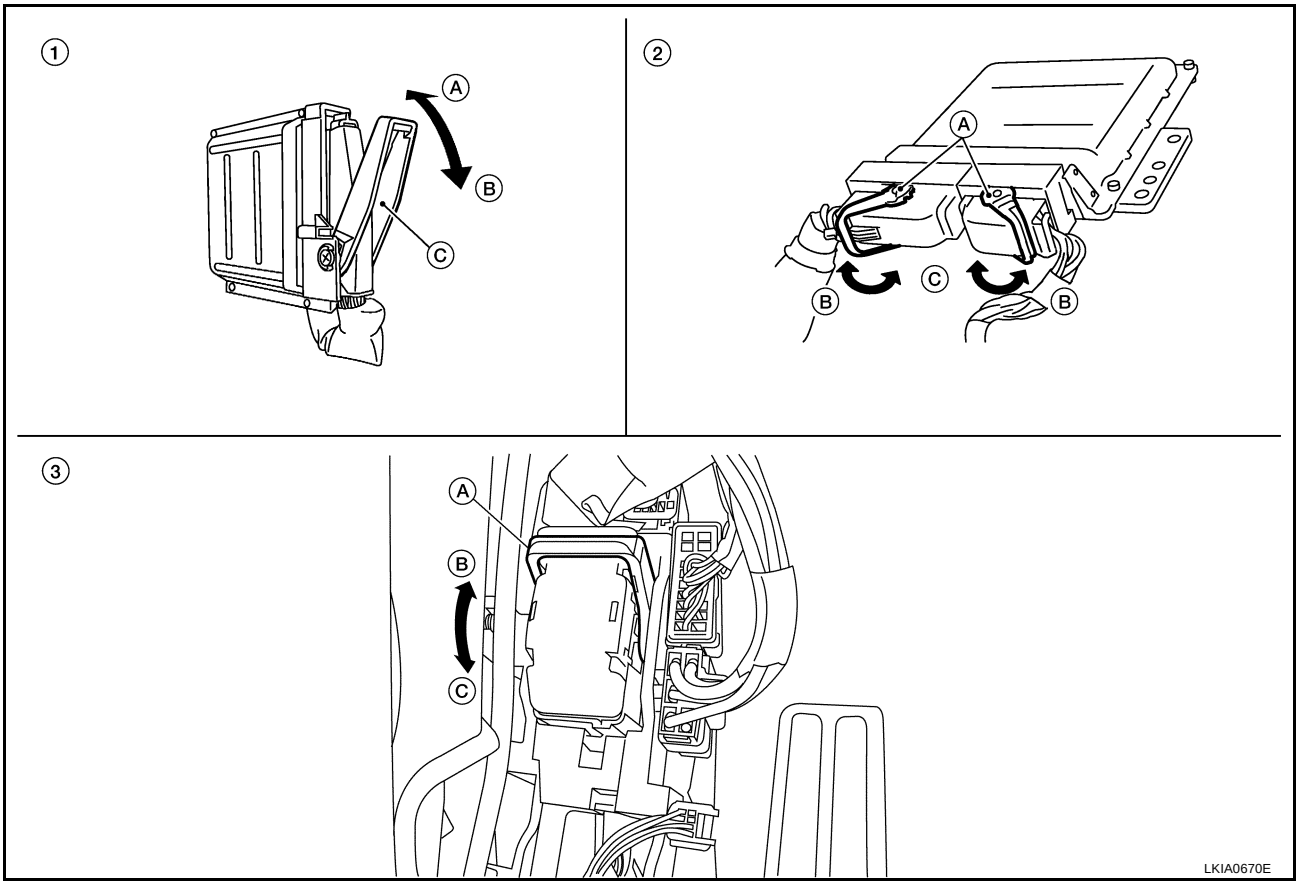

1. Control unit with single lever
   A. Fasten
   B. Loosen
   C. Lever
2. Control unit with dual levers
   A. Levers
   B. Fasten
   C. Loosen
3. SMJ connector
   A. Lever
   B. Fasten
   C. Loosen

ELECTRICAL UNITS

PFP:00011

Terminal Arrangement

NKS000QU

ECM

F108

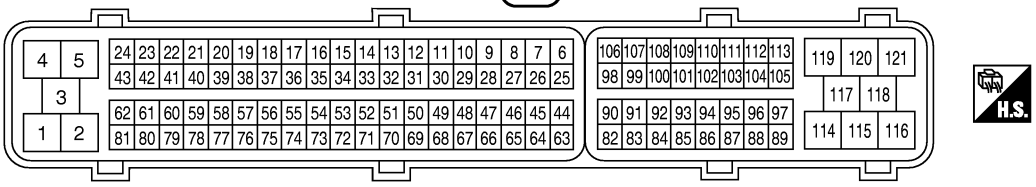

(Black)

VDC/TCS/ABS CONTROL UNIT

M93

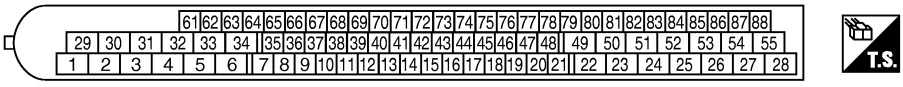

(Black)

DISPLAY AND A/C AUTO AMP.

M31

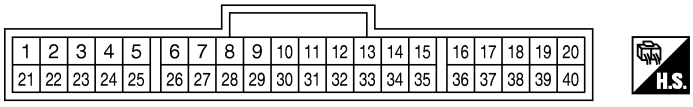

(White)

BCM (BODY CONTROL MODULE)

M1

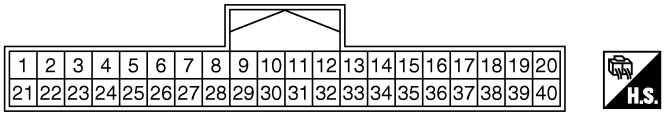

(White)

M2

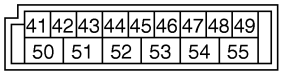

(Black)

B4

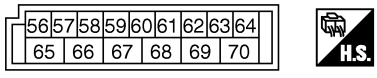

(White)

INTELLIGENT KEY UNIT

M75

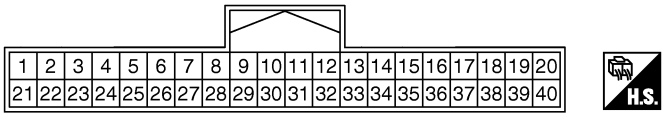

(White)

CKIM0587E

SMJ (SUPER MULTIPLE JUNCTION)

PFP:B4341

Terminal Arrangement

NKS000QV

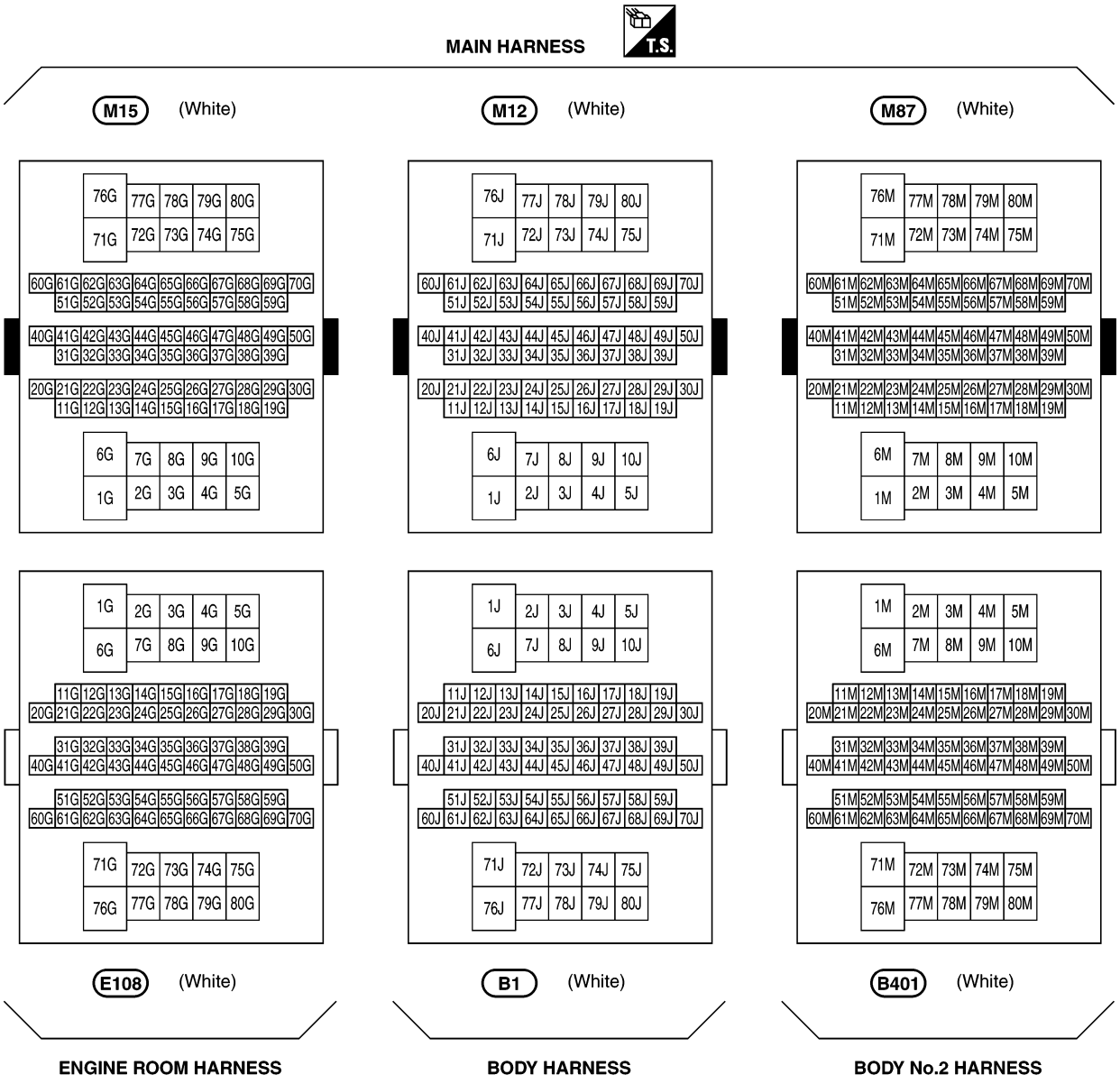

CKIM0430E

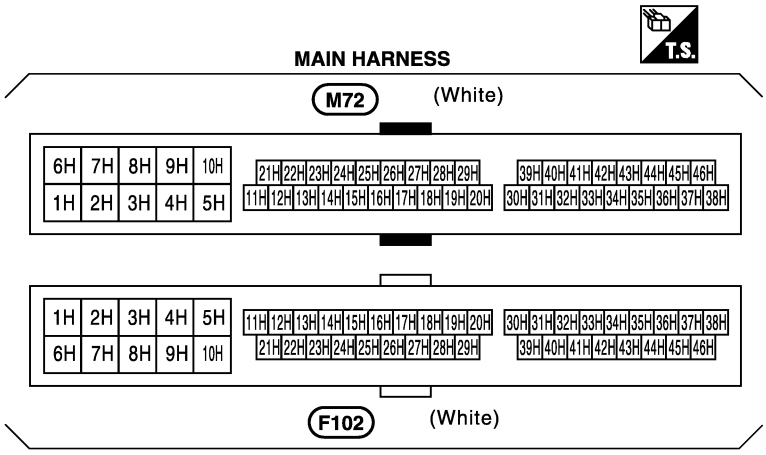
T.S.
MAIN HARNESS
M72
(White)
6H 7H 8H 9H 10H
1H 2H 3H 4H 5H
21H 22H 23H 24H 25H 26H 27H 28H 29H
11H 12H 13H 14H 15H 16H 17H 18H 19H 20H
39H 40H 41H 42H 43H 44H 45H 46H
30H 31H 32H 33H 34H 35H 36H 37H 38H
1H 2H 3H 4H 5H
6H 7H 8H 9H 10H
11H 12H 13H 14H 15H 16H 17H 18H 19H 20H
21H 22H 23H 24H 25H 26H 27H 28H 29H
30H 31H 32H 33H 34H 35H 36H 37H 38H
39H 40H 41H 42H 43H 44H 45H 46H
F102
(White)
ENGINE CONTROL HARNESS

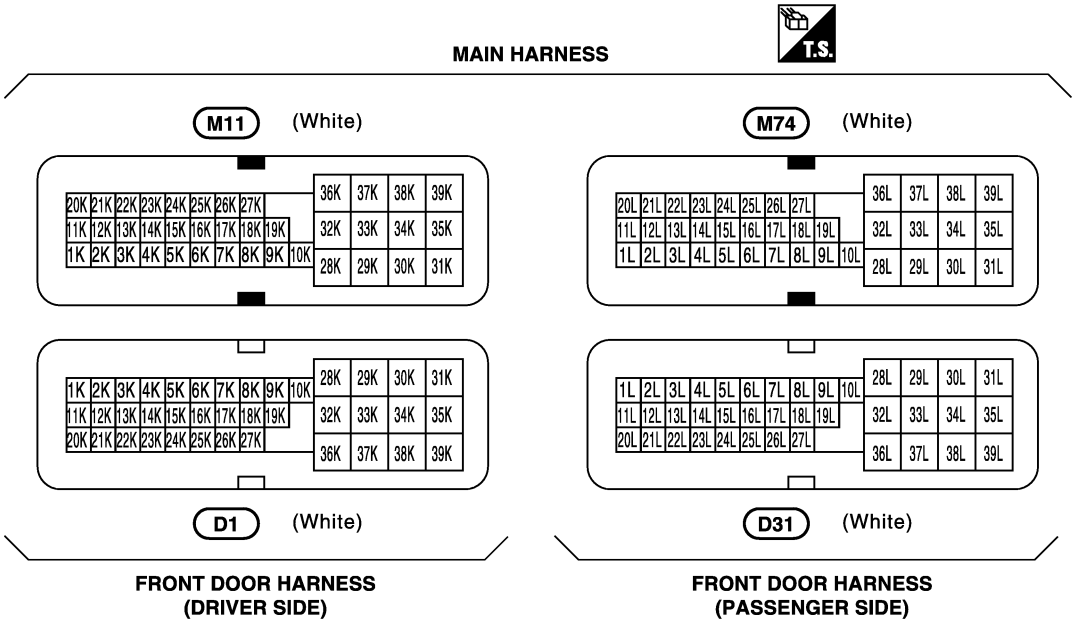
T.S.
MAIN HARNESS
M11
(White)
20K 21K 22K 23K 24K 25K 26K 27K
11K 12K 13K 14K 15K 16K 17K 18K 19K
1K 2K 3K 4K 5K 6K 7K 8K 9K 10K
36K 37K 38K 39K
32K 33K 34K 35K
28K 29K 30K 31K
M74
(White)
20L 21L 22L 23L 24L 25L 26L 27L
11L 12L 13L 14L 15L 16L 17L 18L 19L
1L 2L 3L 4L 5L 6L 7L 8L 9L 10L
36L 37L 38L 39L
32L 33L 34L 35L
28L 29L 30L 31L
1K 2K 3K 4K 5K 6K 7K 8K 9K 10K
11K 12K 13K 14K 15K 16K 17K 18K 19K
20K 21K 22K 23K 24K 25K 26K 27K
28K 29K 30K 31K
32K 33K 34K 35K
36K 37K 38K 39K
1L 2L 3L 4L 5L 6L 7L 8L 9L 10L
11L 12L 13L 14L 15L 16L 17L 18L 19L
20L 21L 22L 23L 24L 25L 26L 27L
28L 29L 30L 31L
32L 33L 34L 35L
36L 37L 38L 39L
D1
(White)
D31
(White)
FRONT DOOR HARNESS
(DRIVER SIDE)
FRONT DOOR HARNESS
(PASSENGER SIDE)

CKIT0158E

STANDARDIZED RELAY

PFP:00011

Description

NKS000QW

NORMAL OPEN, NORMAL CLOSED AND MIXED TYPE RELAYS

Relays can mainly be divided into three types: normal open, normal closed and mixed type relays.

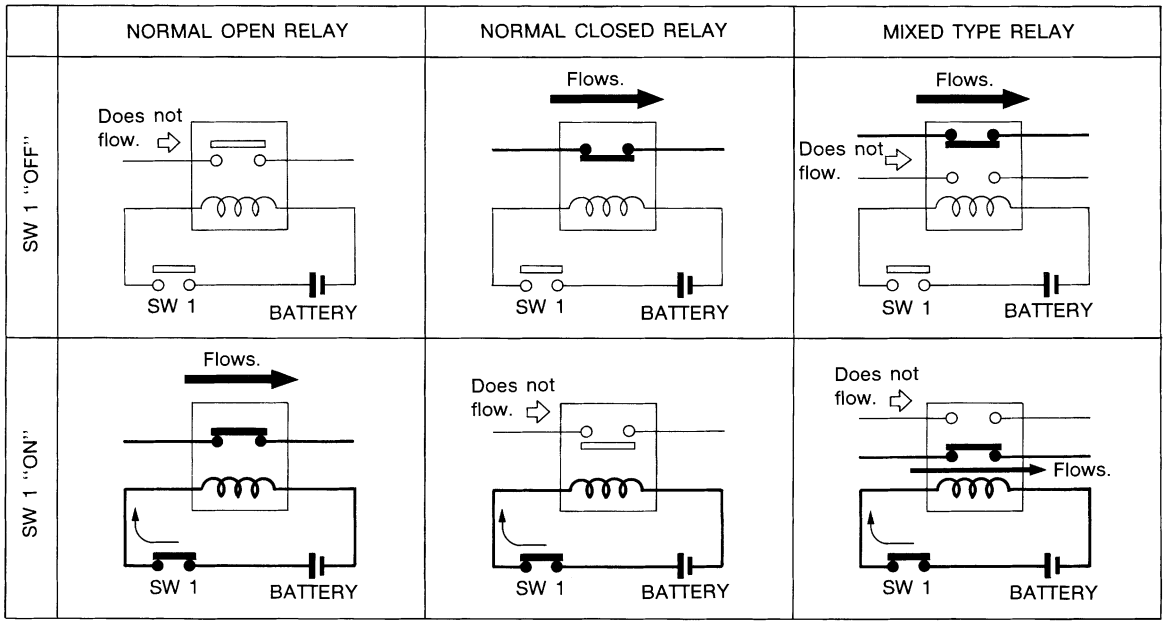

SEL881H

TYPE OF STANDARDIZED RELAYS

1M ..... 1 Make
1T ..... 1 Transfer
2M ..... 2 Make
1M·1B ..... 1 Make 1 Break

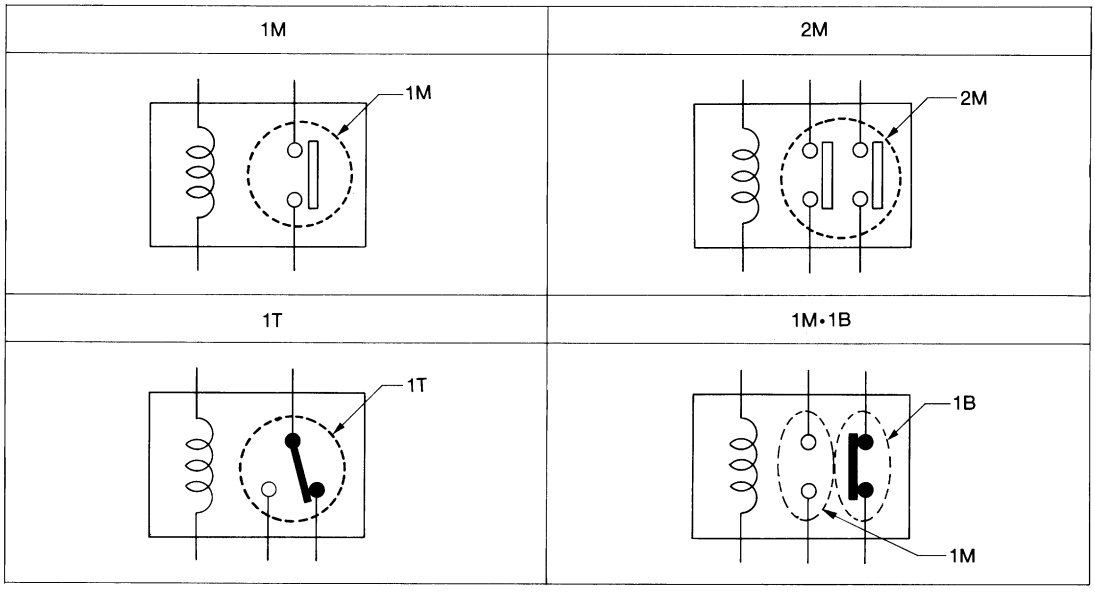

SEL882H

Type	Outer view	Circuit	Connector symbol and connection	Case color
1T	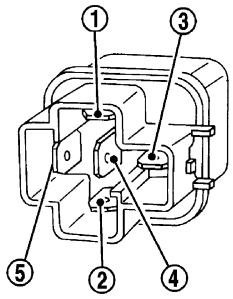	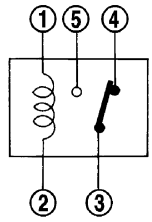	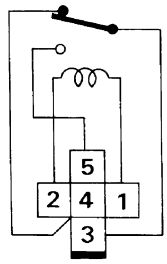	BLACK
2M	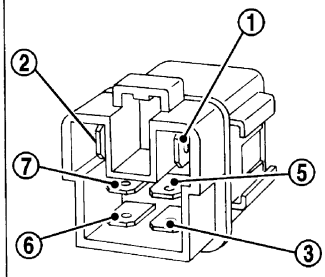	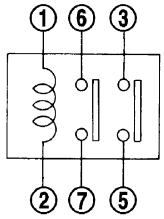	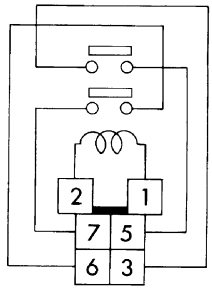	BROWN
1M•1B	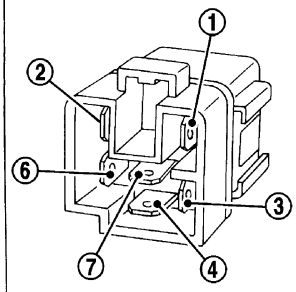	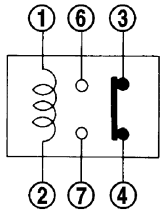	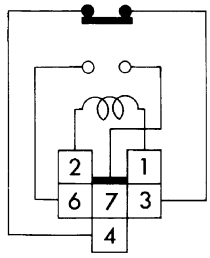	GRAY
1M	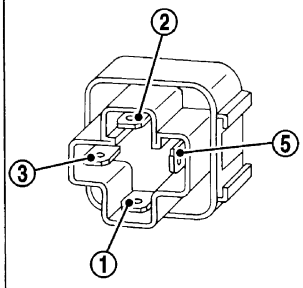	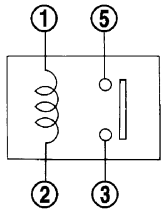	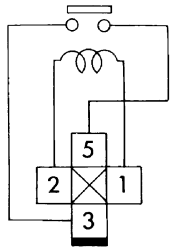	BLUE
	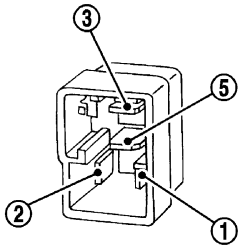		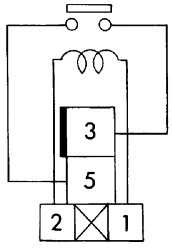	

The arrangement of terminal numbers on the actual relays may differ from those shown above.

SEL188W

FUSE BLOCK - JUNCTION BOX (J/B)

PFP:24350

Terminal Arrangement

NKS000QX

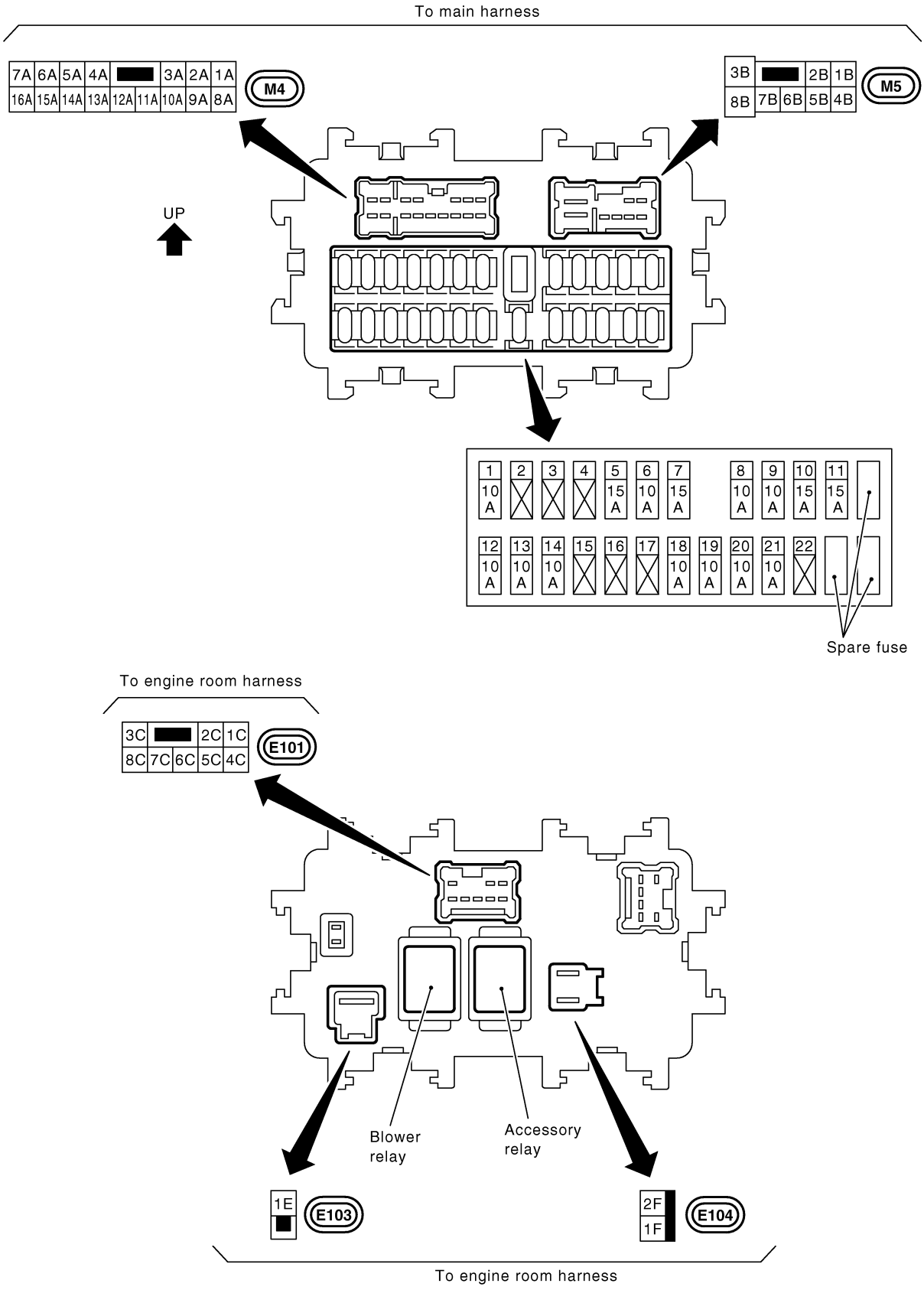

CKIM0721E

FUSE, FUSIBLE LINK AND RELAY BOX

PFP:24382

Terminal Arrangement

NKS000QY

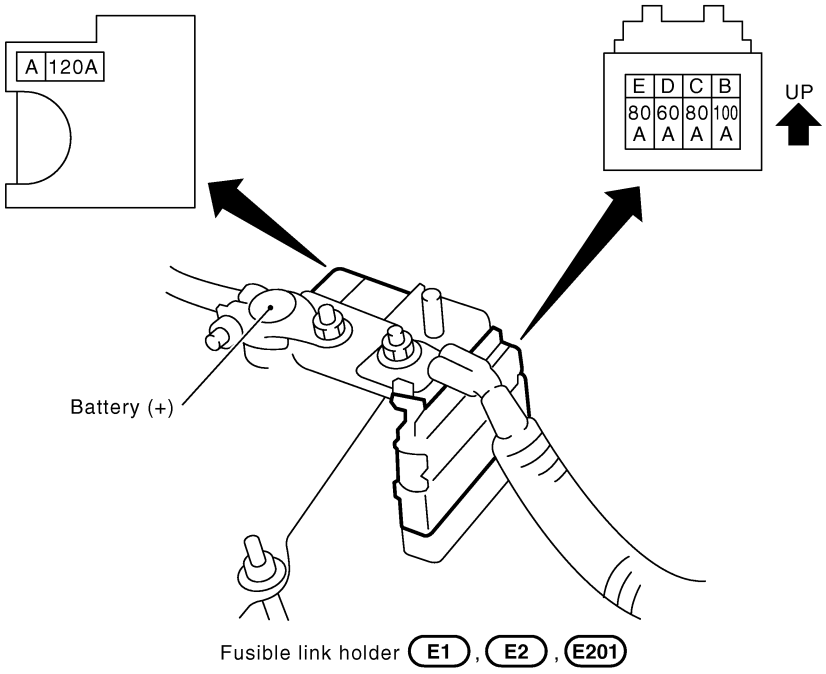

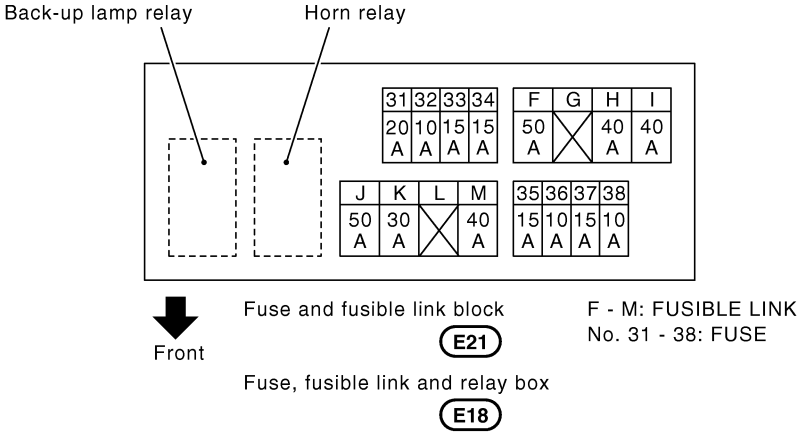

CKIM0586E