STEERING SYSTEM

SECTION ST

CONTENTS

Supplemental Restraint System (SRS) "AIR BAG" and "SEAT BELT PRE-TENSIONER"

NCST0001

The supplemental Restraint System such as "AIR BAG" and "SEAT BELT PRE-TENSIONER" used along with a seat belt, helps to reduce the risk or severity of injury to the driver and front passenger for certain types of collision. The SRS system composition which is available to INFINITI G20 is as follows:

- For a frontal collision
  The Supplemental Restraint System consists of driver air bag module (located in the center of the steering wheel), front passenger air bag module (located on the instrument panel on passenger side), seat belt pre-tensioners, a diagnosis sensor unit, warning lamp, wiring harness and spiral cable.
- For a side collision
  The Supplemental Restraint System consists of side air bag module (located in the outer side of front seat), satellite sensor, diagnosis sensor unit (one of components of air bags for a frontal collision), wiring harness, warning lamp (one of components of air bags for a frontal collision).

Information necessary to service the system safely is included in the **RS** section of this Service Manual.

WARNING:

- **To avoid rendering the SRS inoperative, which could increase the risk of personal injury or death in the event of a collision which would result in air bag inflation, all maintenance must be performed by an authorized INFINITI dealer.**
- **Improper maintenance, including incorrect removal and installation of the SRS, can lead to personal injury caused by unintentional activation of the system. For removal of Spiral Cable and Air Bag Module, see the RS section.**
- **Do not use electrical test equipment on any circuit related to the SRS unless instructed to in this Service Manual. SRS wiring harnesses (except "SEAT BELT PRE-TENSIONER" connector) can be identified by yellow harness connector.**

Precautions for Steering System

NCST0003

- **Before disassembly, thoroughly clean the outside of the unit.**
- **Disassembly should be done in a clean work area. It is important to prevent the internal parts from becoming contaminated by dirt or other foreign matter.**
- **Place disassembled parts in order, on a parts rack, for easier and proper assembly.**
- **Use nylon cloths or paper towels to clean the parts; common shop rags can leave lint that might interfere with their operation.**
- **Before inspection or reassembly, carefully clean all parts with a general purpose, non-flammable solvent.**
- **Before assembly, apply a coat of recommended Genuine Nissan PSF-II or equivalent to hydraulic parts. Vaseline may be applied to O-rings and seals. Do not use any grease.**
- **Replace all gaskets, seals and O-rings. Avoid damaging O-rings, seals and gaskets during installation. Perform functional tests whenever designated.**

Special Service Tools

NCST0004

The actual shapes of Kent-Moore tools may differ from those of special service tools illustrated here.

Tool number (Kent-Moore No.) Tool name	Description	
KV48100700 (J26364) Torque adapter	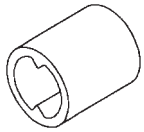 NT169	Measuring pinion rotating torque
ST35300000 (—) Drift	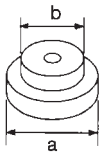 NT073	Installing power steering oil pump oil seal **a: 59 mm (2.32 in) dia.** **b: 45 mm (1.77 in) dia.**
KV48102500 (J33914) Pressure gauge adapter	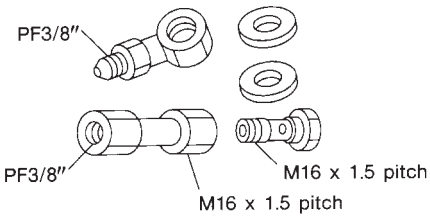 NT542	Measuring oil pressure
ST27180001 (J41777) Steering wheel puller	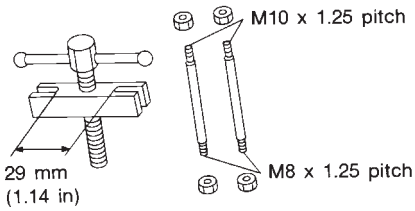 NT544	Removing steering wheel
HT72520000 (J25730-B) Ball joint remover	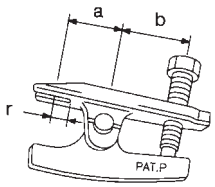 NT546	Removing ball joint **a: 33 mm (1.30 in)** **b: 50 mm (1.97 in)** **r: R11.5 mm (0.453 in)**
KV48103500 (J26357 and J26357-10) Pressure gauge	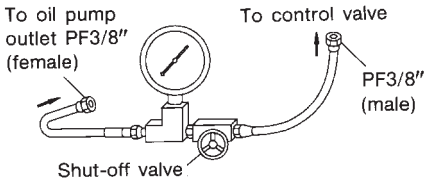 NT547	Measuring oil pressure
KV48104400 (—) Rack seal ring reformer	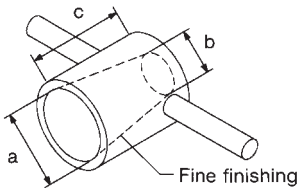 NT550	Reforming teflon ring **a: 50 mm (1.97 in) dia.** **b: 36 mm (1.42 in) dia.** **c: 100 mm (3.94 in)**

Special Service Tools (Cont'd)

Tool number (Kent-Moore No.) Tool name	Description	
ST3127S000 1 GG91030000 (See J25765-A) Torque wrench 2 HT62940000 (—) Socket adapter 3 HT62900000 (—) Socket adapter	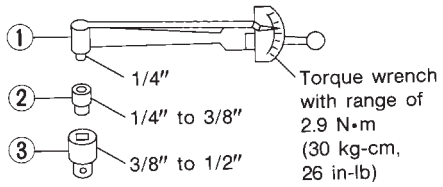 NT541	Measuring turning torque
(J-44372) Spring gauge	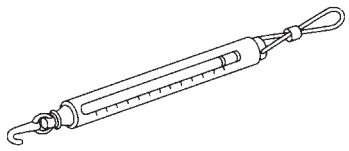 NT127	Measuring steering wheel turning force
(J-44183-A) Spring gauge	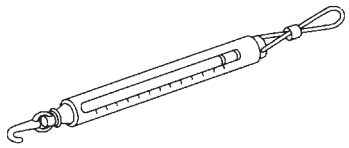 NT127	Measuring rack sliding force

Commercial Service Tools

NCST0005

Tool number	Description	
Rear oil seal drift	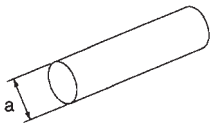 NT063	Installing rear oil seal **a: 28 mm (1.10 in) dia.**
Pinion oil seal drift	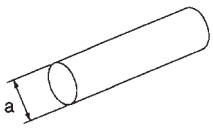 NT063	Installing pinion oil seal **a: 35 mm (1.38 in) dia.**
Oil pump attachment	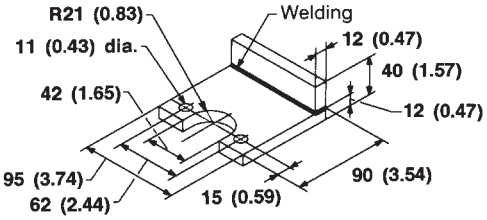 NT179	Disassembling and assembling oil pump Unit: mm (in)

NVH Troubleshooting Chart

NCST0006S01

Use the chart below to help you find the cause of the symptom. If necessary, repair or replace these parts.

Reference page			ST-7	ST-7	ST-19	ST-19	ST-19	ST-7	ST-6	ST-8	MA-13	—	ST-10	ST-6	ST-14	ST-13	ST-15	AX-3	AX-3	SU-3	SU-3	SU-3	BR-6
Possible cause and SUSPECTED PARTS			Fluid level	Air in hydraulic system	Tie-rod ball joint swinging force	Tie-rod ball joint rotating torque	Tie-rod ball joint end play	Steering gear fluid leakage	Steering wheel play	Steering gear rack sliding force	Drive belt looseness	Improper steering wheel	Improper installation or looseness or tilt lock lever	Mounting rubber deterioration	Steering column deformation or damage	Improper installation or looseness of steering column	Steering linkage looseness	DRIVE SHAFT	AXLE	SUSPENSION	TIRES	ROAD WHEEL	BRAKES
Symptom	STEERING	Noise	×	×	×	×	×	×	×	×	×							×	×	×	×	×	×
		Shake										×	×	×				×	×	×	×	×	×
		Vibration										×	×	×	×	×		×	×	×	×		
		Shimmy										×	×	×			×		×	×	×	×	×
		Judder												×			×		×	×	×	×	×

×: Applicable

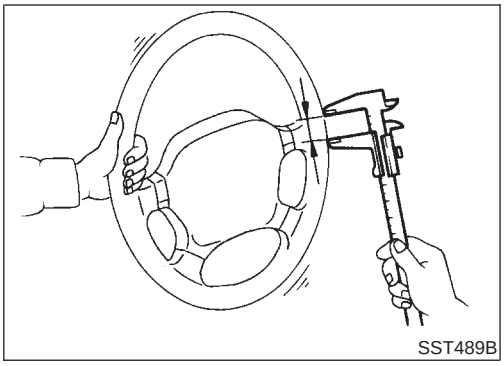
SST489B

Checking Steering Wheel Play

NCST0007

- With wheels in a straight-ahead position, check steering wheel play.

  Steering wheel play:
  35 mm (1.38 in) or less

- If it is not within specification, check the following for loose or worn components.

  Steering gear assembly
  Steering column
  Front suspension and axle

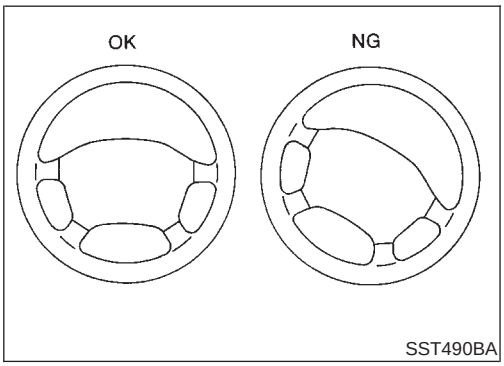

SST490BA

Checking Neutral Position on Steering Wheel

NCST0008

PRE-CHECKING

NCST0008S01

- Make sure that wheel alignment is correct.

  Wheel alignment:
  Refer to SU-15, SDS.

- Verify that the steering gear is centered before removing the steering wheel.

CHECKING

NCST0008S02

1. Check that the steering wheel is in the neutral position when driving straight ahead.
2. If it is not in the neutral position, remove the steering wheel and reinstall it correctly.
3. If the neutral position is between two teeth, loosen tie-rod lock nuts. Turn the tie-rods by the same amount in opposite directions on both left and right sides.

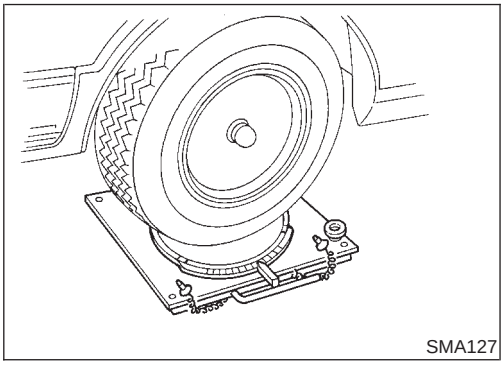
SMA127

Front Wheel Turning Angle

NCST0009

1. Rotate steering wheel all the way right and left; measure turning angle.

   Turning angle of full turns:
   Refer to SU-15, SDS.

2. If it is not within specification, check rack stroke.

   Rack stroke “S”:
   Refer to SDS, ST-32.

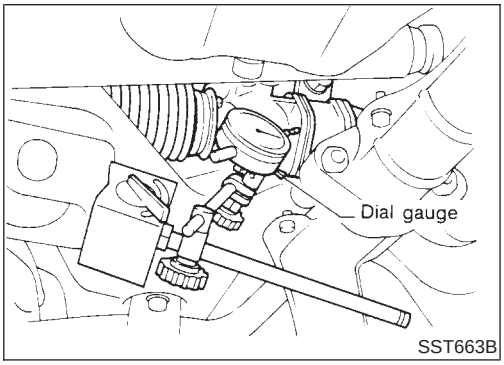

SST663B

Checking Gear Housing Movement

NCST0010

1. Check the movement of steering gear housing during stationary steering on a dry paved surface.

- Apply a force of 49 N (5 kg, 11 lb) to steering wheel to check the gear housing movement.
  Turn off ignition key while checking.

  Movement of gear housing:
  ±2 mm (±0.08 in) or less

2. If movement exceeds the limit, replace mount insulator after confirming proper installation of gear housing clamps.

Checking and Adjusting Drive Belts

NCST0011

Refer to MA-13, “Checking Drive Belts”.

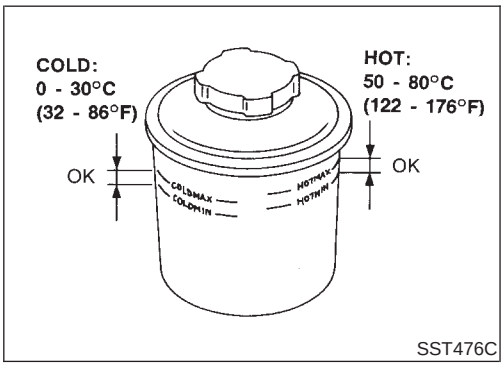

SST476C

Checking Fluid Level

NCST0012

Check fluid level, referring to the scale on reservoir tank.
Use “HOT” range for fluid temperatures of 50 to 80°C (122 to 176°F).
Use “COLD” range for fluid temperatures of 0 to 30°C (32 to 86°F).

CAUTION:

- **Do not overfill.**
- **Recommended fluid is Genuine Nissan PSF-II or equivalent.**

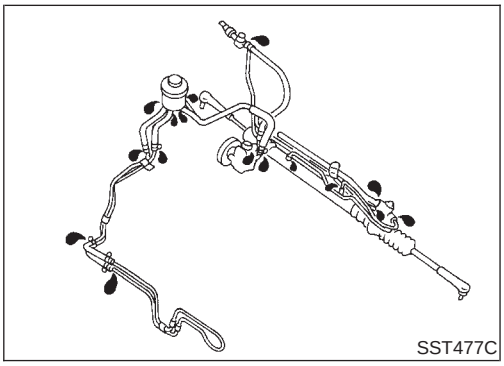
SST477C

Checking Fluid Leakage

NCST0013

Check the lines for improper attachment and for leaks, cracks, damage, loose connections, chafing and deterioration.

1. Run engine between idle speed and 1,000 rpm.

Make sure temperature of fluid in oil tank rises to 60 to 80°C (140 to 176°F).

2. Turn steering wheel right-to-left several times.
3. Hold steering wheel at each “lock” position for five seconds and carefully check for fluid leakage.

CAUTION:
Do not hold the steering wheel in a locked position for more than 15 seconds.

4. If fluid leakage at connectors is noticed, loosen flare nut and then retighten.

Do not overtighten connector as this can damage O-ring, washer and connector.

5. If fluid leakage from power steering pump is noticed, check power steering pump. Refer to ST-26.
6. Check rack boots for accumulation of power steering fluid.

Bleeding Hydraulic System

NCST0014

1. Raise front end of vehicle until wheels are clear of the ground.
2. Add fluid into oil tank to specified level. Then quickly turn steering wheel fully to right and left and lightly touch steering stoppers.
   Repeat steering wheel operation until fluid level no longer decreases.
3. Start engine.
   Repeat step 2. above.

- Incomplete air bleeding will cause the following to occur. When this happens, bleed air again.

a) Air bubbles in reservoir tank
b) Clicking noise in oil pump
c) Excessive buzzing in oil pump

Fluid noise may occur in the valve or oil pump. This is common when the vehicle is stationary or while turning the steering wheel slowly. This does not affect the performance or durability of the system.

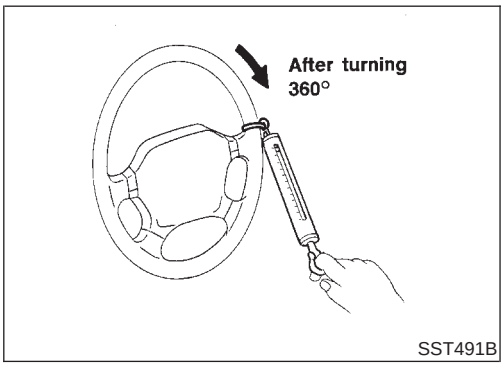

SST491B

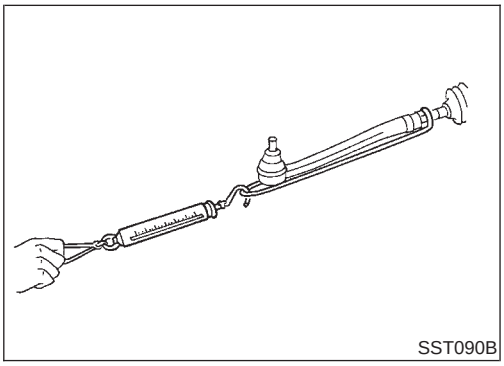
SST090B

Checking Steering Wheel Turning Force

NCST0015

1. Park vehicle on a level, dry surface and set parking brake.
2. Start engine.
3. Bring power steering fluid up to adequate operating temperature. [Make sure temperature of fluid is approximately 60 to 80°C (140 to 176°F).]

Tires need to be inflated to normal pressure.

4. Check steering wheel turning force when steering wheel has been turned 360° from the neutral position.

   Steering wheel turning force:
   39 N (4 kg, 9 lb) or less

5. If steering wheel turning force is out of specification, check rack sliding force.

a. Disconnect steering column lower joint and knuckle arms from the gear.
b. Start and run engine at idle to make sure steering fluid has reached normal operating temperature.
c. Pull tie-rod slowly to move it from neutral position to ±11.5 mm (±0.453 in) at speed of 3.5 mm (0.138 in)/s. Check that rack sliding force is within specification.

   Average rack sliding force:
   167 - 226 N (17 - 23 kg, 37 - 51 lb)
   Maximum force deviation:
   98 N (10 kg, 22 lb)

d. Check sliding force outside the above range.

   Rack sliding force:
   Not more than 294 N (30 kg, 66 lb)

6. If rack sliding force is not within specification, overhaul steering gear assembly.
7. If rack sliding force is OK, inspect steering column. Refer to ST-13.

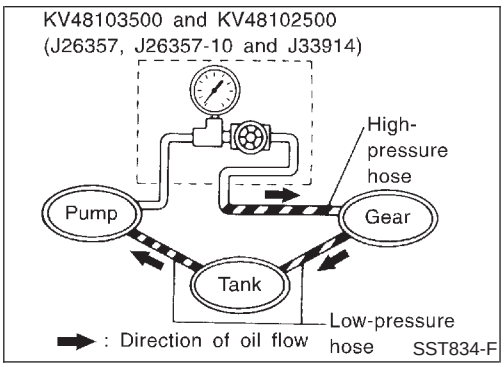

SST834-F

Checking Hydraulic System

NCST0016

Before starting, check belt tension, driving pulley and tire pressure.

1. Set Tool. Open shut-off valve. Then bleed air. Refer to "Bleeding Hydraulic System", ST-7.
2. Run engine at idle speed or 1,000 rpm.

Make sure temperature of fluid in tank rises to 60 to 80°C (140 to 176°F).

WARNING:
Warm up engine with shut-off valve fully opened. If engine is started with shut-off valve closed, fluid pressure in oil pump increases to maximum. This will raise oil temperature abnormally.

3. Check pressure with steering wheel fully turned to left and right positions with engine idling at 1,000 rpm.

CAUTION:
Do not hold the steering wheel in a locked position for more than 15 seconds.

Oil pump maximum standard pressure:
8,140 - 8,728 kPa (83 - 89 kg/cm^2, 1,180 - 1,266 psi)

- If pressure reaches maximum operating pressure, system is OK.
- If pressure increases above maximum operating pressure, check power steering pump flow control valve. Refer to ST-26.

4. If power steering pressure is below the maximum operating pressure, slowly close shut-off valve and check pressure again.

CAUTION:
Do not close shut-off valve for more than 15 seconds.

- If pressure increases to maximum operating pressure, gear is damaged. Refer to "Removal and Installation", ST-16.
- If pressure remains below maximum operating pressure, pump is damaged. Refer to "Disassembly", ST-26.

5. After checking hydraulic system, remove Tool and add fluid as necessary. Then completely bleed air out of system. Refer to ST-7.

Components

NCST0017

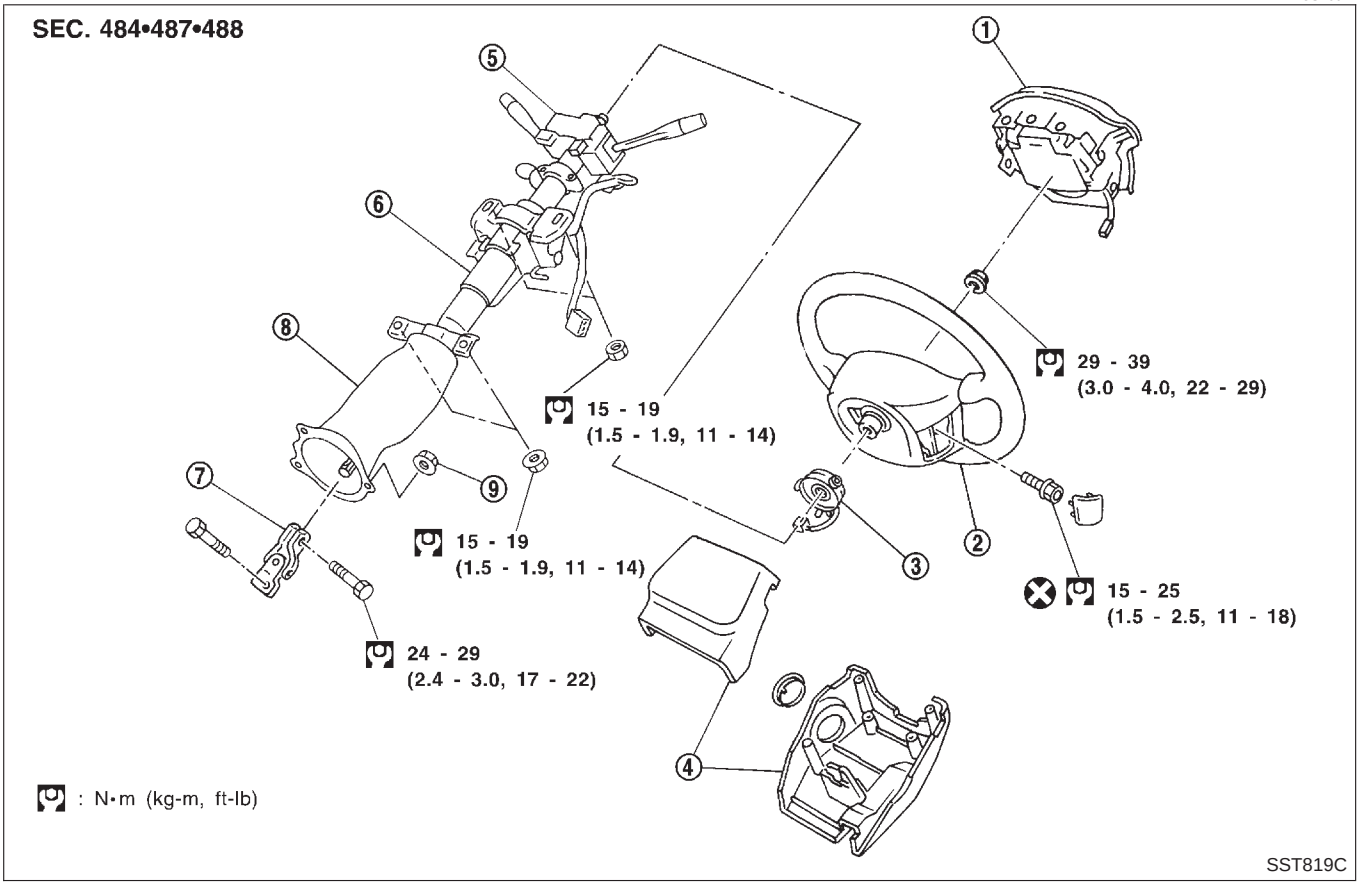

1. Air bag module
2. Steering wheel
3. Spiral cable
4. Column cover
5. Combination switch
6. Steering column assembly
7. Lower joint
8. Boot
9. Clip

CAUTION:

- **The rotation of the spiral cable (SRS "AIR BAG" component part) is limited. If the steering gear must be removed, set the front wheels in the straight-ahead direction. Do not rotate the steering column while the steering gear is removed.**
- **Remove the steering wheel before removing the steering lower joint to avoid damaging the SRS spiral cable.**

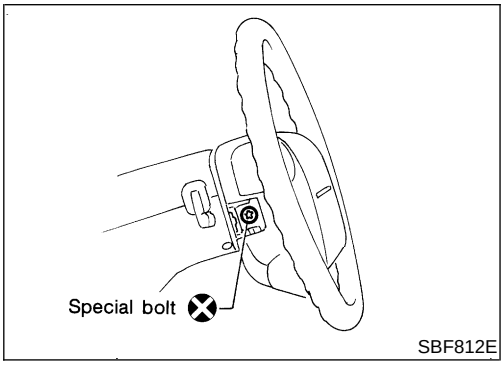

Removal and Installation

NCST0018

STEERING WHEEL

NCST0018S01

- Remove air bag module and spiral cable.
  Refer to RS-19, "Removal — Air Bag Module and Spiral Cable".

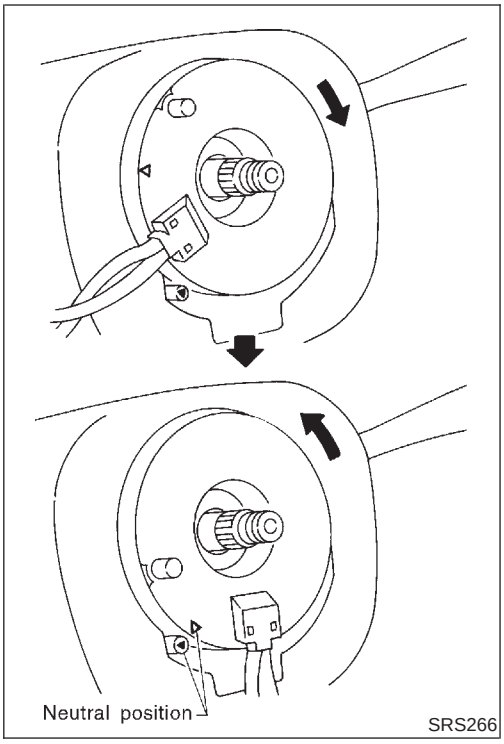

- Align spiral cable correctly when installing steering wheel.

a) Set the front wheels in the straight-ahead position.

b) Make sure that the spiral cable is in the neutral position. The neutral position is detected by turning left 2.5 revolutions from the right end position. Align the two marks (⧗).

CAUTION:

The spiral cable may snap due to steering operation if the cable is installed in an improper position.
Also, with the steering linkage disconnected, the cable may snap by turning the steering wheel beyond the limited number of turns. (The spiral cable can be turned up to 2.5 turns from the neutral position to both the right and left.)

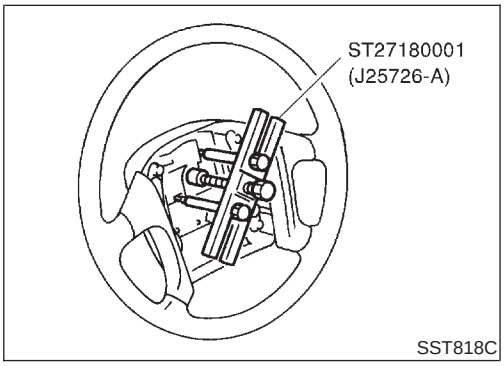

- Remove steering wheel with Tool.

STEERING COLUMN

NCST0018S02

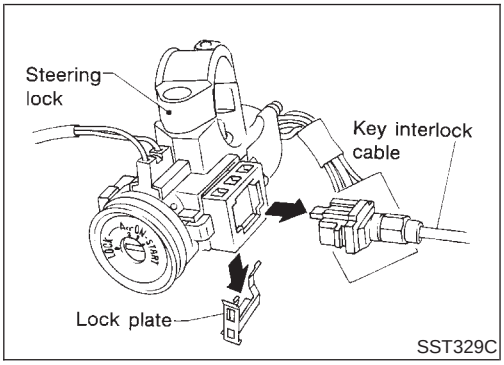

- Remove key interlock cable (A/T models).

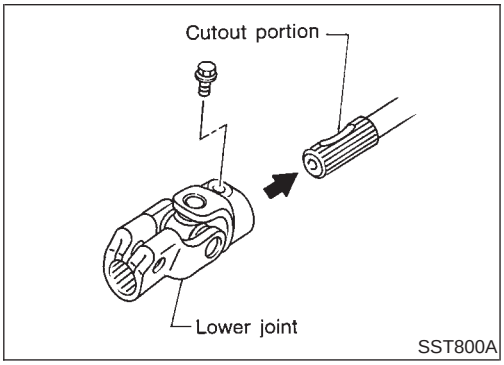

- When installing steering column, fingertighten all lower bracket and clamp retaining bolts; then tighten them securely. Do not apply undue stress to steering column.
- When attaching coupling joint, be sure tightening bolt faces cutout portion.

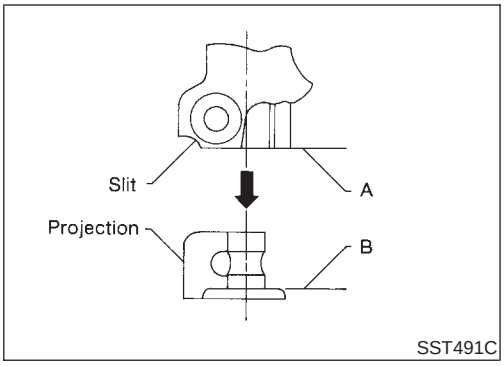

- Align slit of lower joint with projection on dust cover. Insert joint until surface A contacts surface B.

CAUTION:
After installation, turn steering wheel to make sure it moves smoothly. Ensure the number of turns are the same from the straight forward position to left and right locks. Be sure that the steering wheel is in a neutral position when driving straight ahead.

Disassembly and Assembly

=NCST0019

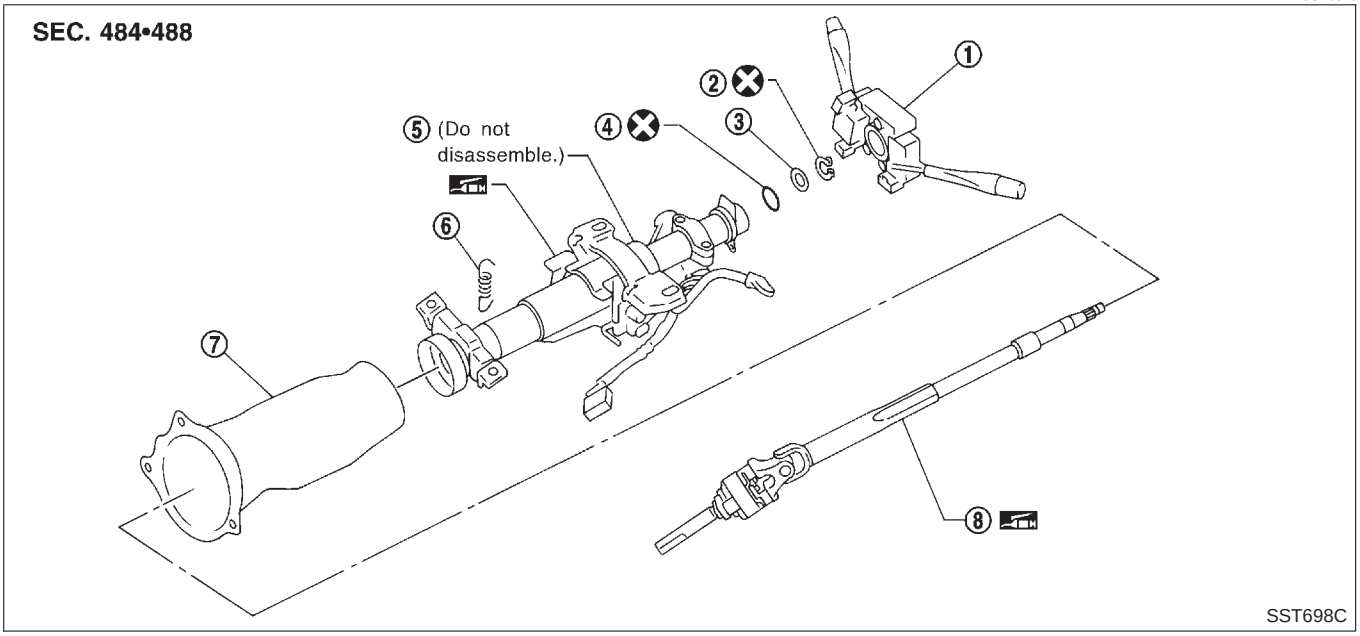

1. Combination switch
2. Snap ring
3. Washer
4. O-ring
5. Jacket tube assembly
6. Spring
7. Steering column lower cover
8. Column shaft assembly

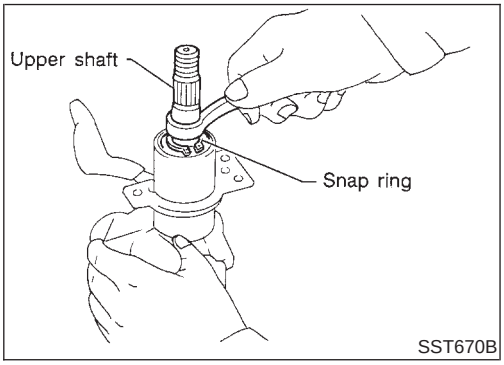

- When disassembling and assembling, unlock steering lock with key.
- Remove combination switch.
- Ensure that rounded surface of snap ring faces toward bearing when snap ring is installed.
- Install snap ring on upper shaft with a suitable tool.

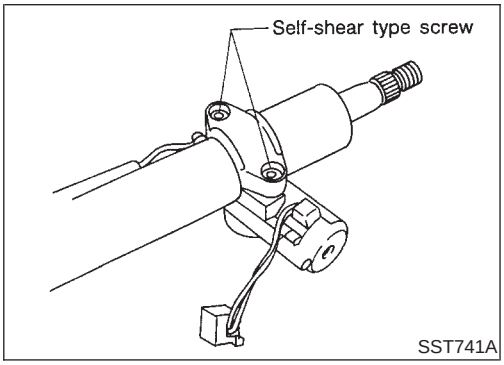

- Steering lock

a) Break self-shear type screws with a drill or other appropriate tool.

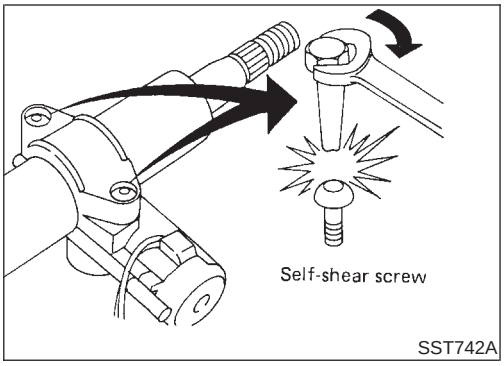

b) Install new self-shear type screws and then cut off self-shear type screw heads.

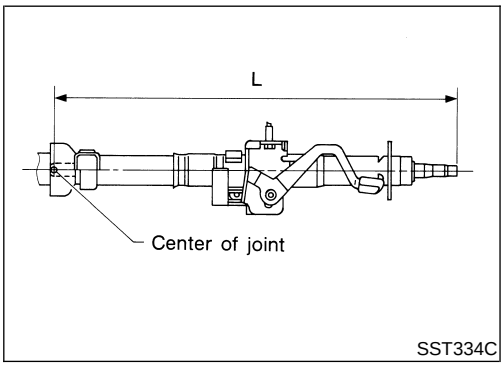

Inspection

NCST0020

- When steering wheel does not turn smoothly, check the steering column as follows and replace damaged parts.

a) Check column bearings for damage or unevenness. Lubricate with recommended multi-purpose grease or replace steering column as an assembly, if necessary.

b) Check jacket tube for deformation or breakage. Replace if necessary.

- When the vehicle comes into a light collision, check length "L".

Column length "L":

535.9 - 538.1 mm (21.10 - 21.18 in)

If out of the specifications, replace steering column as an assembly.

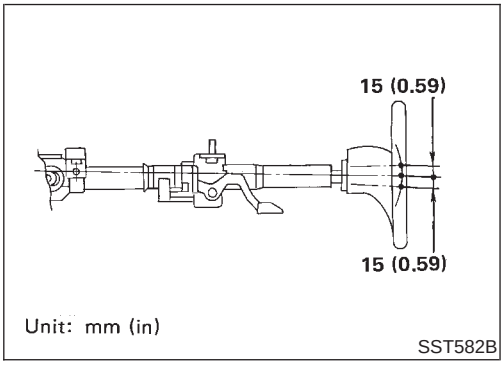

TILT MECHANISM

NCST0020S01

- After installing steering column, check tilt mechanism operation.

Components

NCST0021

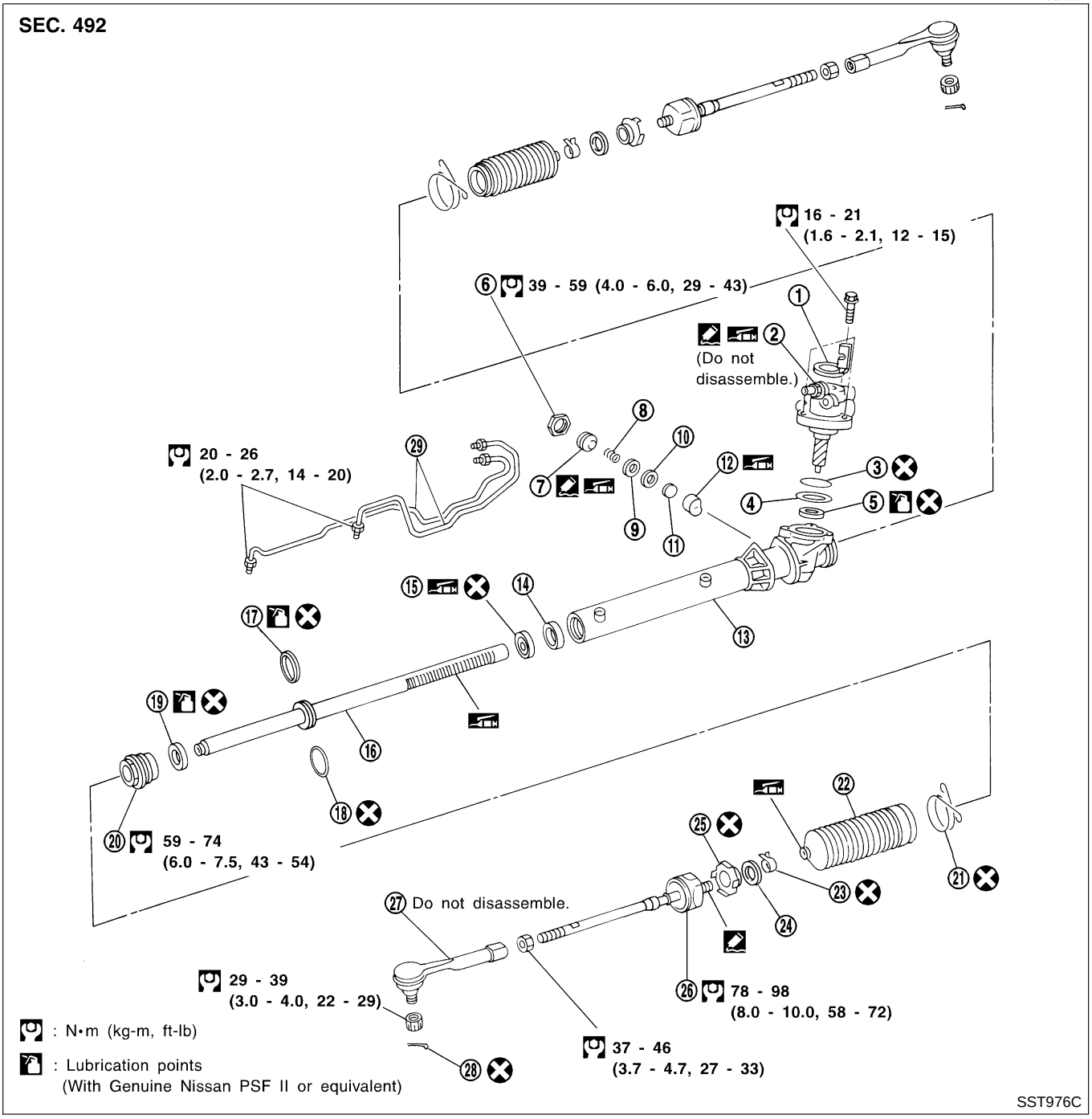

1. Rear cover cap
2. Sub-gear assembly
3. O-ring
4. Shim
5. Pinion oil seal
6. Lock nut
7. Adjusting screw
8. Spring
9. Spring disc
10. Washer
11. Spring seat
12. Retainer
13. Gear housing
14. Center bushing
15. Rack oil seal
16. Rack assembly
17. Rack seal ring
18. O-ring
19. Rack oil seal
20. End cover assembly
21. Boot clamp
22. Dust boot
23. Boot band
24. Lock plate
25. Tie-rod inner socket
26. Tie-rod outer socket
27. Cotter pin
28. Gear housing tube
29. Spacer

Removal and Installation

NCST0022

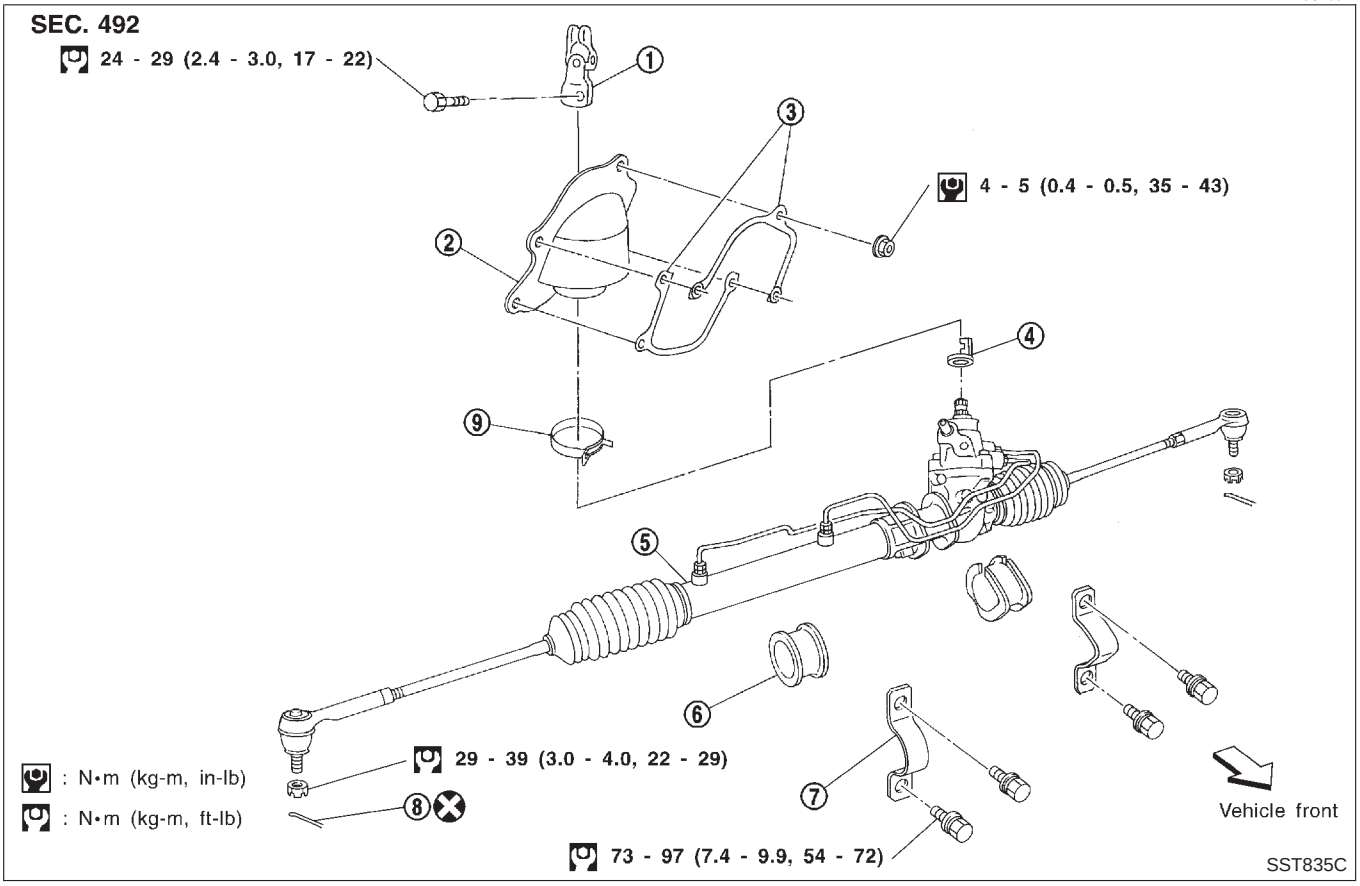

1. Lower joint
2. Hole cover
3. Insulator bracket
4. Rear cover cap
5. Gear and linkage assembly
6. Rack mounting insulator
7. Gear housing mounting bracket
8. Cotter pin
9. Clamp

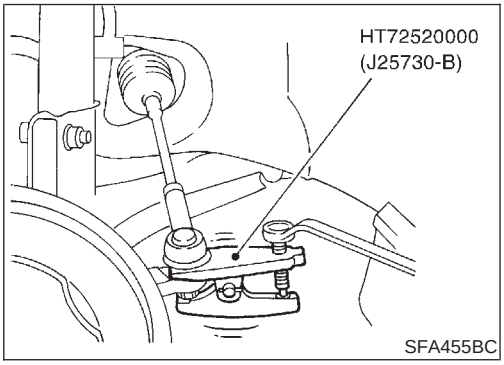

CAUTION:

- **The rotation of the spiral cable (SRS "AIR BAG" component part) is limited. If the steering gear must be removed, set the front wheels in the straight-ahead direction. Do not rotate the steering column while the steering gear is removed.**
- **Remove the steering wheel before removing the steering lower joint to avoid damaging the SRS spiral cable.**
- Detach tie-rod outer sockets from knuckle arms with Tool.
- When disconnecting steering shaft lower joint, follow the procedure shown below.

1. Remove nuts for fitting the hole cover.
2. Disconnect the lower joint while shifting the hole cover.

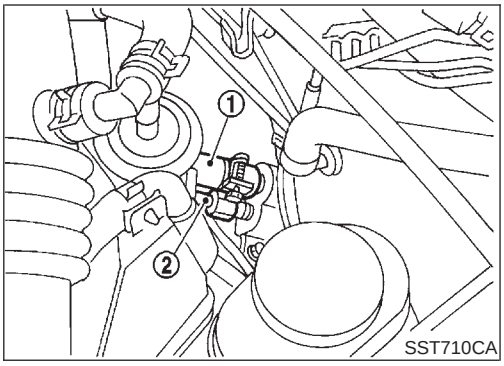

- Install pipe connector.
- Observe specified tightening torque when tightening high-pressure and low-pressure pipe connectors. Excessive tightening will damage threads of connector or O-ring.

  Connector tightening torque:

  1 Low-pressure side

  27 - 39 N·m (2.8 - 4.0 kg-m, 20 - 29 ft-lb)

  2 High-pressure side

  15 - 25 N·m (1.5 - 2.5 kg-m, 11 - 18 ft-lb)
- The O-ring in low-pressure pipe connector is larger than that in high-pressure connector. Take care to install the proper O-ring.

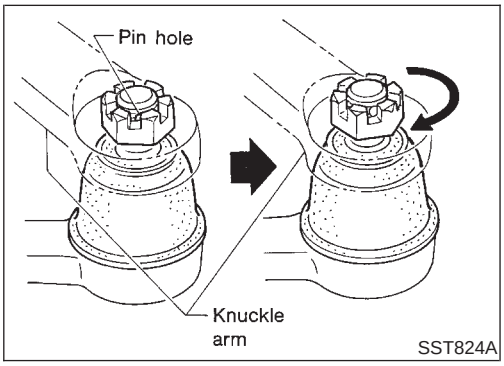

- Initially, tighten nut on tie-rod outer socket and knuckle arm to 29 to 39 N·m (3 to 4 kg-m, 22 to 29 ft-lb). Then tighten further to align nut groove with first pin hole so that cotter pin can be installed.

CAUTION:

Tightening torque must not exceed 49 N·m (5 kg-m, 36 ft-lb).

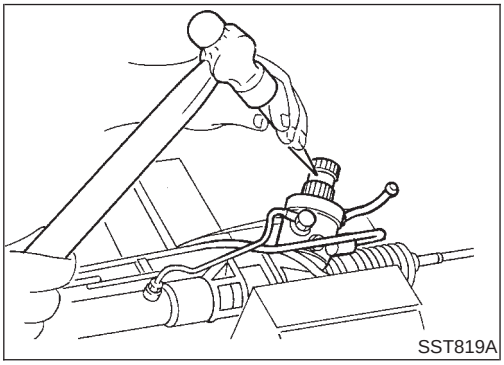

- Before removing lower joint from gear, set gear in neutral (wheels in straight-ahead position). After removing lower joint, put matching mark on pinion shaft and pinion housing to record neutral position.
- To install, set left and right dust boots to equal deflection. Attach lower joint by aligning matching marks of pinion shaft and pinion housing.

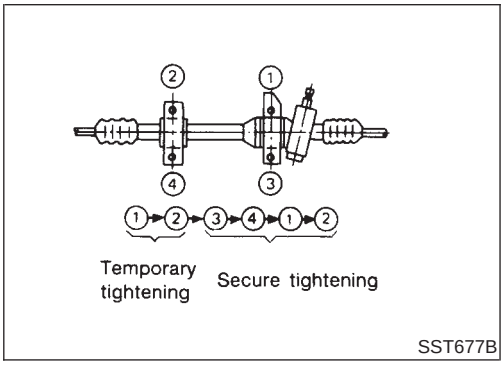

- Tighten gear housing mounting bracket bolts in the order shown.

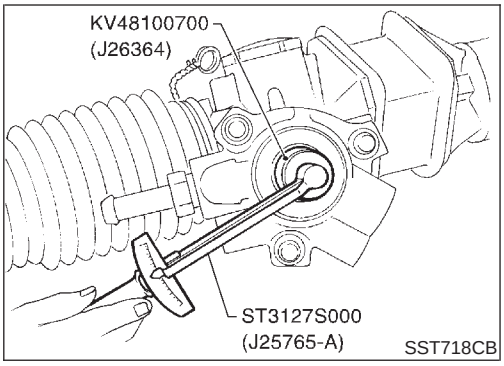

Disassembly

NCST0023

1. Prior to disassembling, measure pinion rotating torque. Record the pinion rotating torque as a reference.

- **Before measuring, disconnect gear housing tube and drain fluid.**
- **Use soft jaws when holding steering gear housing. Handle gear housing carefully, as it is made of aluminum. Do not grip cylinder in a vise.**

2. Remove pinion gear.

Be careful not to damage pinion gear when removing pinion seal ring.

3. Remove tie-rod outer sockets and boots.
4. Loosen tie-rod inner socket by prying up staked portion, and remove socket.
5. Remove retainer.
6. Remove pinion assembly.
7. Use a 2 to 2.5 mm (0.079 to 0.098 in) diameter drill to completely remove staked portion of gear housing end.

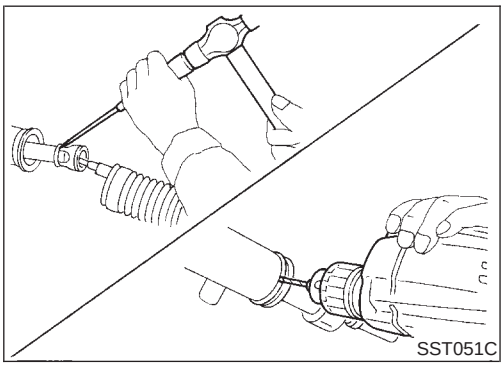

8. Remove end cover assembly with a suitable tool.
9. Draw out rack assembly.
10. Remove rack seal ring.

- Using a heat gun, heat rack seal to approximately 40°C (104°F).
- Remove rack seal ring.

Be careful not to damage rack.

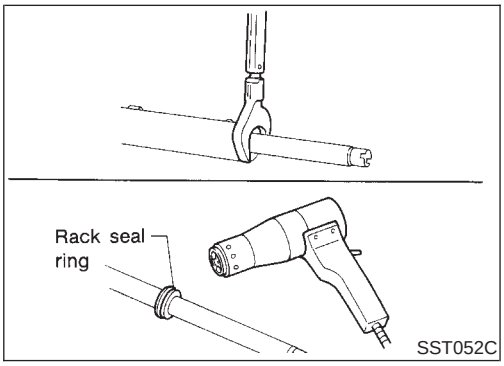

11. Remove center bushing and rack oil seal using tape wrapped socket and extension bar.

Do not scratch inner surfaces of pinion housing.

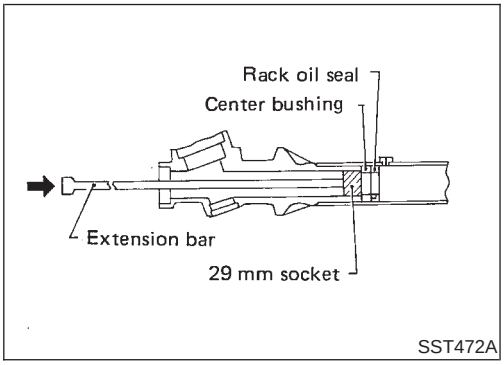

Inspection

NCST0024

Thoroughly clean all parts in cleaning solvent or Genuine Nissan PSF-II or equivalent. Blow dry with compressed air, if available.

BOOT

NCST0024S01

- Check condition of boot. If cracked excessively, replace it.
- Check boots for accumulation of power steering fluid.

RACK

NCST0024S02

Thoroughly examine rack gear. If damaged, cracked or worn, replace it.

PINION ASSEMBLY

NCST0024S03

- Thoroughly examine pinion gear. If pinion gear is damaged, cracked or worn, replace it.
- Check that all bearings roll freely. Ensure that balls, rollers and races are not cracked, pitted or worn. Replace if necessary.

GEAR HOUSING CYLINDER

NCST0024S04

Check gear housing cylinder bore for scratches or other damage. Replace if necessary.

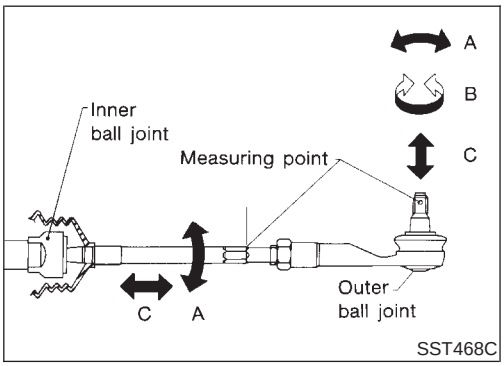

TIE-ROD OUTER AND INNER SOCKETS

NCST0024S05

- Check ball joints for swinging force.

  Tie-rod outer and inner ball joints swinging force "A":
  Refer to SDS, ST-32.
- Check ball joint for rotating torque.

  Tie-rod outer ball joint rotating torque "B":
  Refer to SDS, ST-32.
- Check ball joints for axial end play.

  Tie-rod outer and inner ball joints axial end play "C":
  Refer to SDS, ST-32.
- Check condition of dust cover. If cracked excessively, replace outer tie-rod.

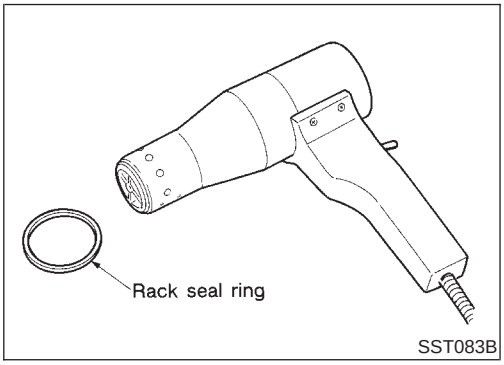

Assembly

NCST0025

1. Using a heat gun, heat new teflon rack seal ring to approximately 40°C (104°F). Then place it onto rack.

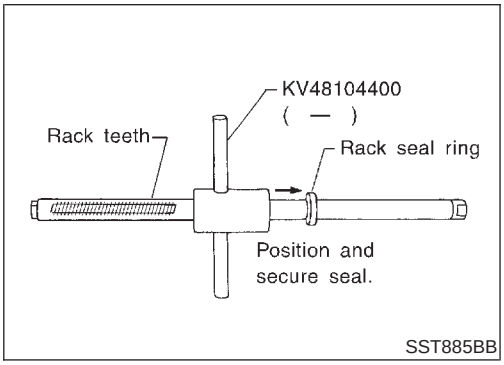

2. Using Tool, compress rack seal ring securely onto rack.

Always insert Tool from the rack gear side.

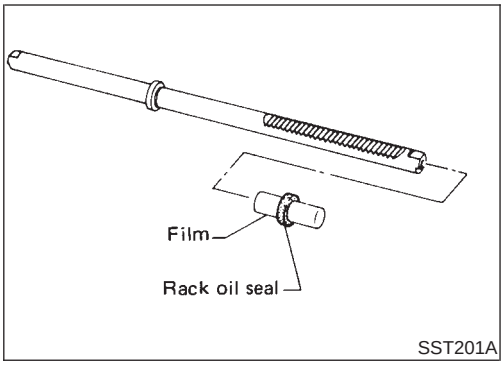

3. Insert new rack oil seal.
- **Place plastic film into rack oil seal to prevent damage by rack teeth.**
- **Do not forget to remove plastic film after rack oil seal is positioned properly.**
- **Make sure lips of rack oil seal face each other.**

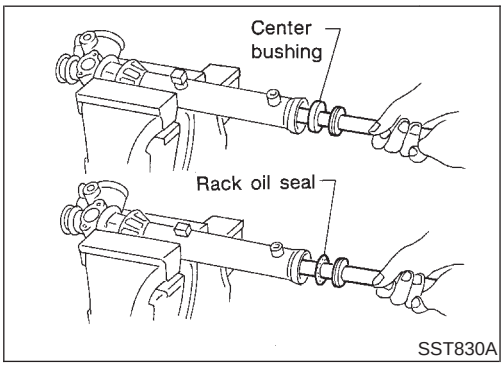

4. Install center bushing and rack oil seal with rack assembly.

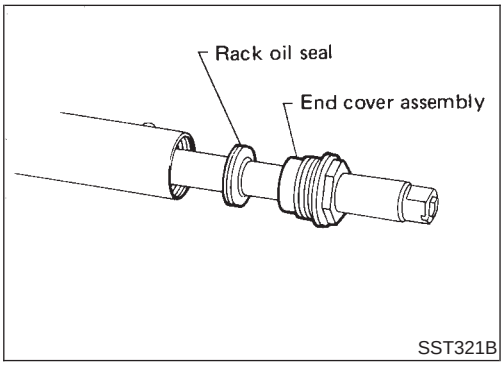

5. Insert rack oil seal and end cover assembly to rack. Then tighten end cover assembly.

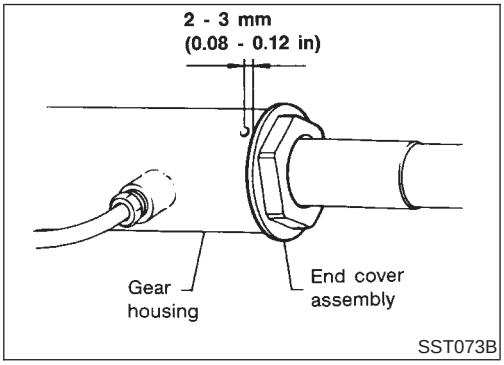

6. Fasten end cover assembly to gear housing by staking.

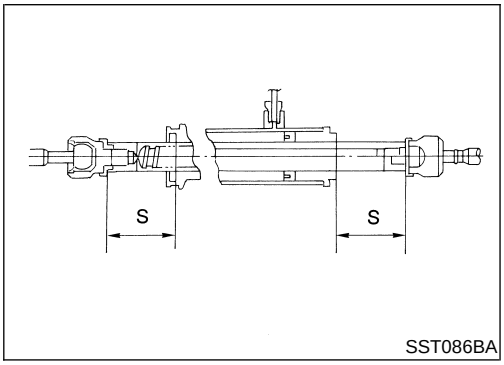

7. Set rack gear in neutral position.

Rack stroke "S":

Refer to SDS, ST-32.

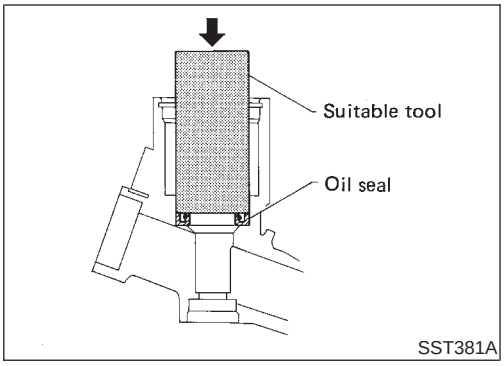

8. Coat seal lip of new pinion oil seal with multi-purpose grease. Install it into pinion housing of gear with a suitable tool.

Make sure lip of oil seal faces up when installed.

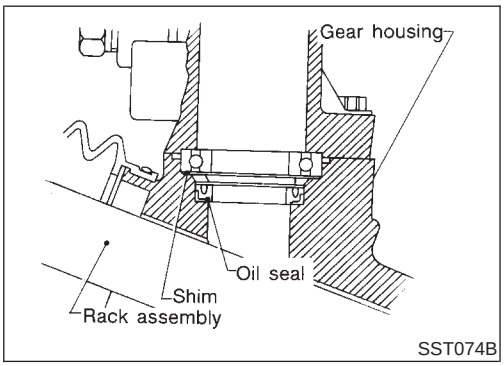

9. Install pinion bearing adjusting shim(s).
- Whenever pinion assembly, gear housing and rear housing are disassembled, replace shim(s) with new ones. Always use the same number of shim(s) when replacing.

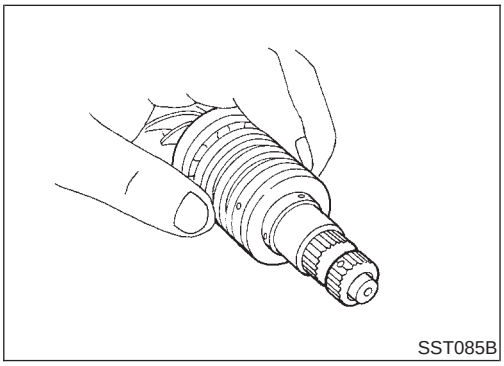

10. Install new pinion seal ring (made of Teflon) on pinion gear assembly.
- Using a heat gun, heat pinion seal ring to approximately 40°C (104°F) before installing it onto pinion gear assembly.
- Make sure pinion seal ring is properly settled in valve groove.

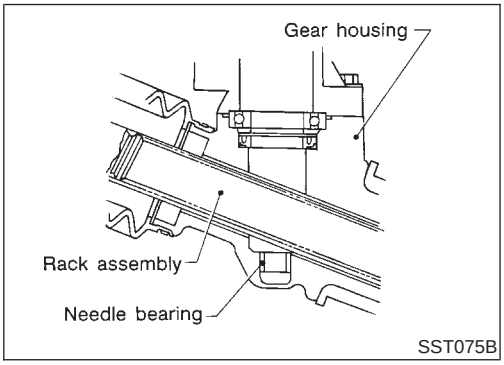

11. Apply a coat of multi-purpose grease to needle bearing roller and oil seal lip.

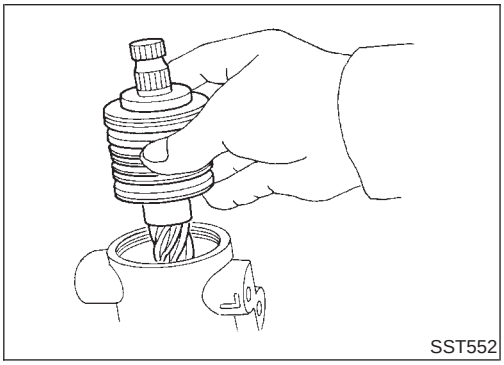

12. Install pinion assembly to rear housing.

Be careful not to damage pinion oil seal.

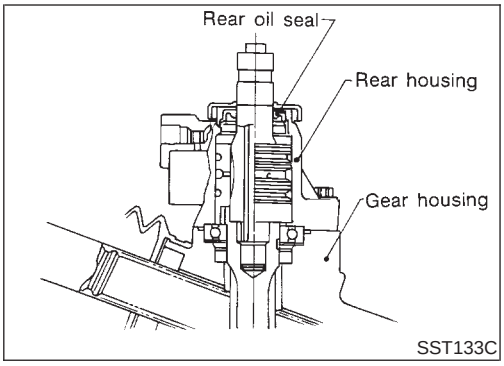

13. Apply a coat of multi-purpose grease to new rear oil seal lip before installing rear housing.

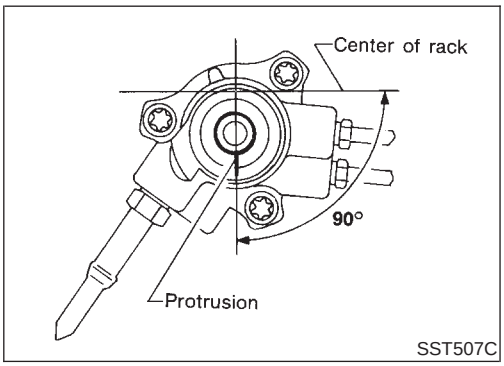

14. Ensure that the rack is centered. Install rear cover cap so that its protrusion is positioned as shown in figure.

Be careful not to damage worm ring and oil seal.

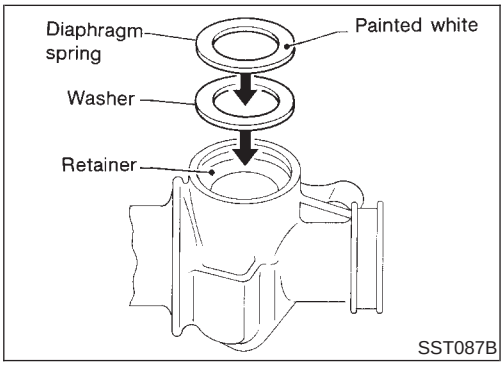

15. Install diaphragm spring into gear housing.
- Always install retainer, spring washer and diaphragm spring in that order.
- Make sure convex end (painted white) of diaphragm spring faces outward when installing.

16. Install retainer spring and adjusting screw temporarily.

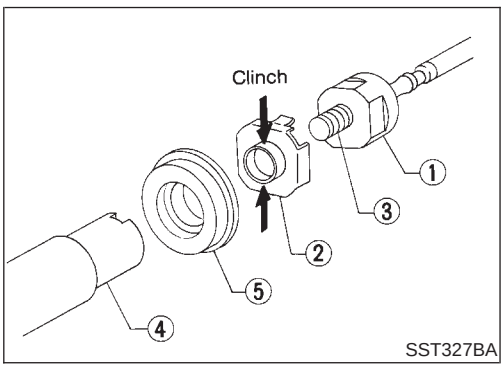

17. Install new lock plate.

a. Attach lock plate 2 to side rod inner socket 1.
b. Insert steering gear spacer 5 to rack 4.
c. Apply locking sealant to inner socket threads 3.
Screw inner socket into rack 4 and tighten to specified torque.
d. Stake lock plate at two places.

CAUTION:
- **To prevent scratching the boot, remove burrs from lock plate.**
- **Ensure steering gear spacer is installed with rubber side facing rack.**

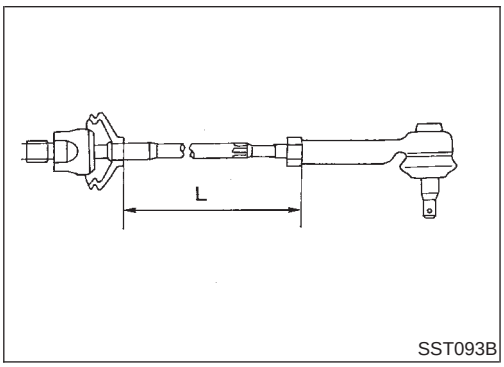

18. Tighten outer socket lock nut.

Tie-rod length "L":
Refer to SDS, ST-32.

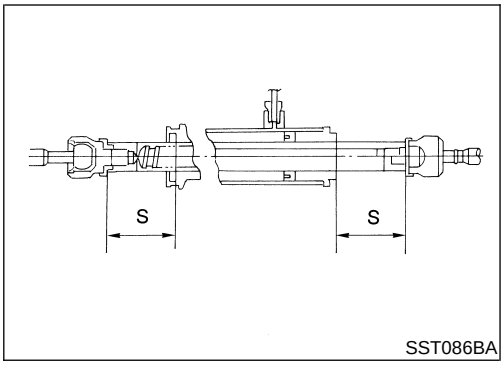

SST086BA

19. Measure rack stroke.

Rack stroke "S":
Refer to SDS, ST-32.

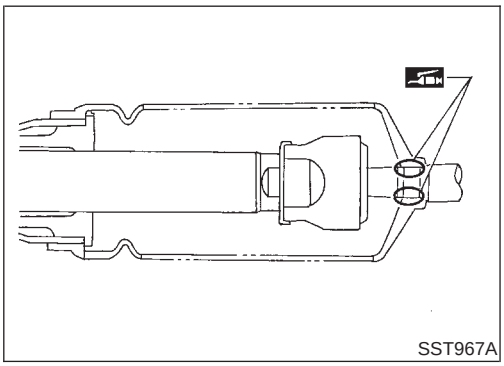
SST967A

20. Before installing boot, coat the contact surfaces between boot and tie-rod with grease.

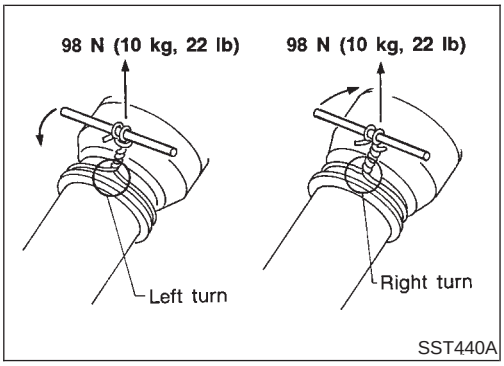

SST440A

21. Install boot clamps.

- To install, wrap boot clamp around boot groove twice. To tighten clamp, place a screwdriver through both rings. Twist rings 4 to 4-1/2 turns while pulling with a force of approx. 98 N (10 kg, 22 lb).
- Twist boot clamp in the direction shown in figure at left.

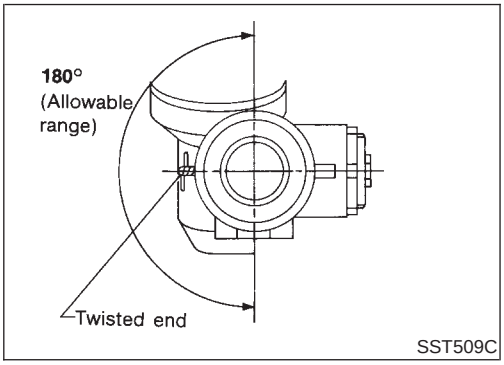

SST509C

- Locate twisted end of boot clamp in the range shown. (This will prevent interference with other parts.)

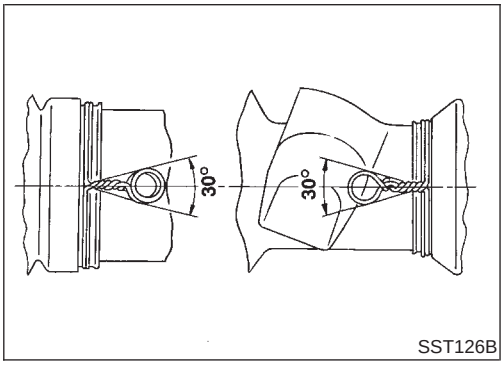

SST126B

- After twisting boot clamp, bend twisted and diagonally so it does not contact boot.

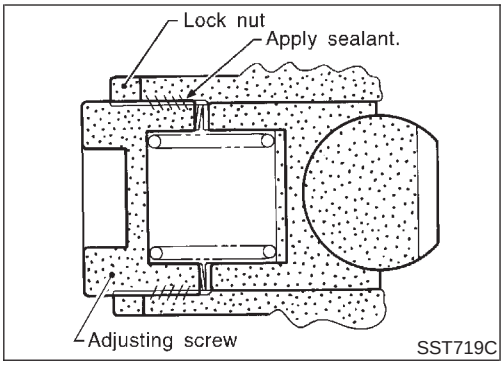

Adjustment

NCST0026

Adjust pinion rotating torque as follows:

1. Set rack to the neutral position without fluid in the gear.
2. Coat the adjusting screw with locking sealant and screw it in.
3. Lightly tighten lock nut.
4. Tighten adjusting screw to a torque of 4.9 to 5.9 N·m (50 to 60 kg-cm, 43 to 52 in-lb).
5. Loosen adjusting screw, then retighten it to 0.2 N·m (2 kg-cm, 1.7 in-lb).

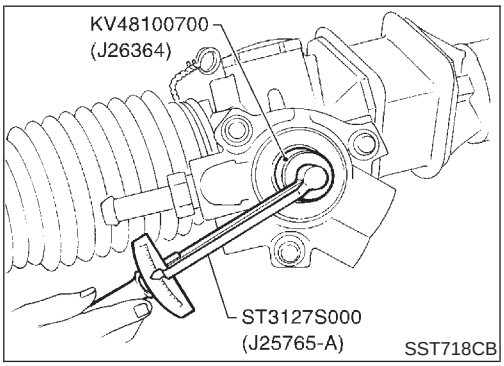

6. Move rack over its entire stroke several times.
7. Measure pinion rotating torque within the range of 180° from neutral position.
   Stop the gear at the point of maximum torque.
8. Loosen adjusting screw, then retighten it to 4.9 N·m (50 kg-cm, 43 in-lb).
9. Loosen adjusting screw by 70° to 110°.

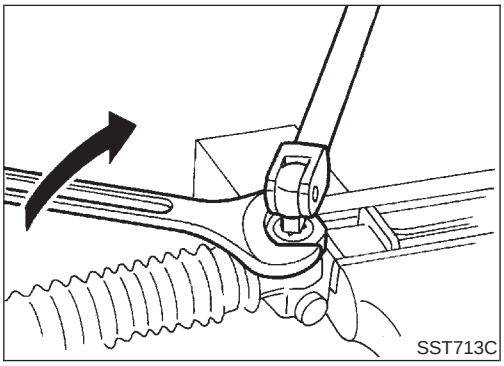

10. Prevent adjusting screw from turning, and tighten lock nut to specified torque.

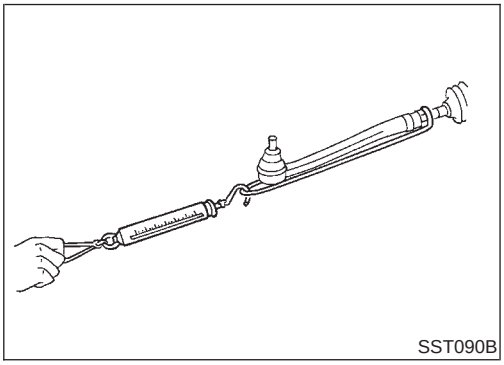

11. Check rack sliding force on vehicle as follows:

a. Install steering gear onto vehicle, but do not connect tie-rod to knuckle arm.
b. Connect all piping and fill with steering fluid.
c. Start engine and bleed air completely.
d. Disconnect steering column lower joint from the gear.
e. Keep engine at idle and make sure steering fluid has reached normal operating temperature.
f. Pull tie-rod slowly to move it from neutral position to ±11.5 mm (±0.453 in) at speed of 3.5 mm (0.138 in)/s. Check that rack sliding force is within specification.

   Average rack sliding force:
   167 - 226 N (17 - 23 kg, 37 - 51 lb)
   Maximum force deviation:
   98 N (10 kg, 22 lb)

g. Check sliding force outside above range at rack speed of 40 mm (1.57 in)/s.

   Maximum rack sliding force:
   294 N (30 kg, 66 lb)
   Maximum force deviation:
   147 N (15 kg, 33 lb)

- If rack sliding force is not within specification, readjust by repeating adjustment procedure from the beginning.
- If rack sliding force is still out of specification after readjustment, gear assembly needs to be replaced.

Components

NCST0037

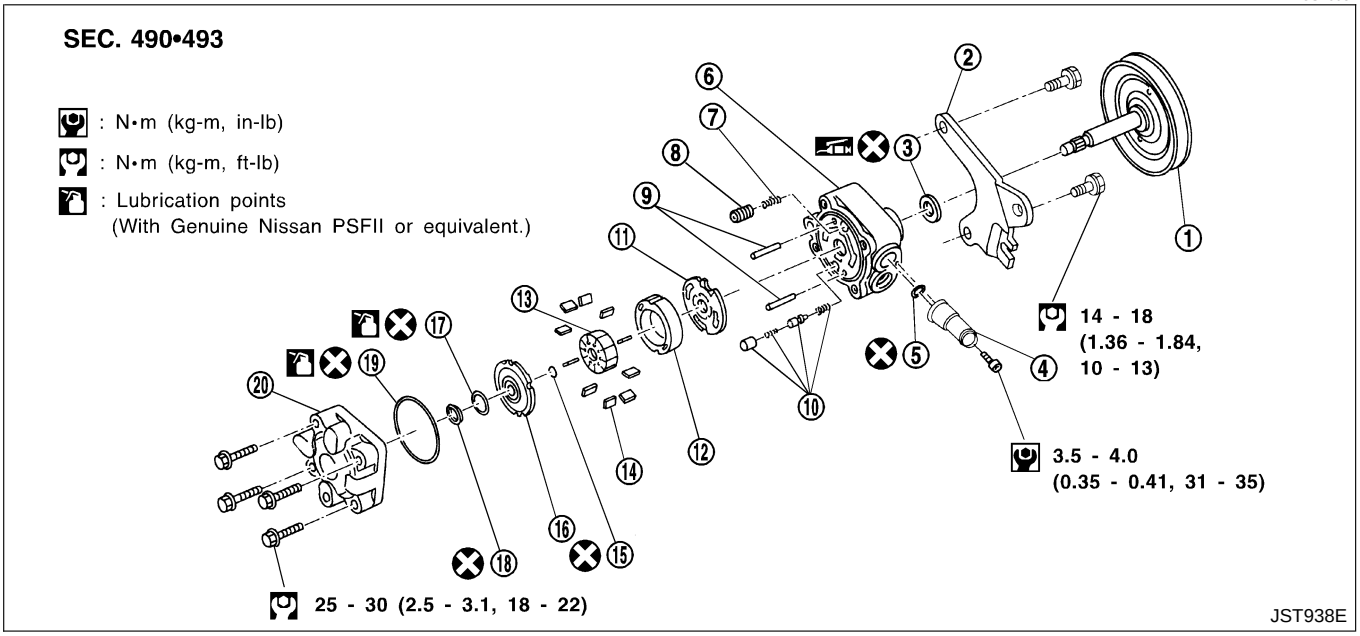

1. Pulley
2. Front bracket
3. Oil seal
4. Suction pipe
5. O-ring
6. Casing
7. Flow control valve spring
8. Flow control A valve
9. Dowel pin
10. Flow control B valve assembly
11. Side plate (Front)
12. Cam ring
13. Rotor
14. Vane
15. Snap ring
16. Side plate (Rear)
17. Side plate inner seal
18. Side plate outer seal
19. O-ring
20. Rear cover

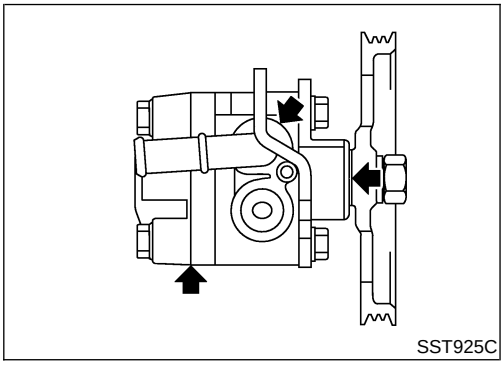

Pre-disassembly Inspection

NCST0038

Disassemble the power steering oil pump only if the following items are found.

- Oil leak from any point shown in the figure.
- Deformed or damaged pulley.
- Poor performance.

Disassembly

NCST0039

CAUTION:

- **Parts which can be disassembled are strictly limited. Never disassemble parts other than those specified.**
- **Disassemble in as clean a place as possible.**
- **Clean your hands before disassembly.**
- **Do not use rags; use nylon cloths or paper towels.**
- **Follow the procedures and cautions in the Service Manual.**
- **When disassembling and reassembling, do not let foreign matter enter or contact the parts.**

1. Fix power steering pump to vise.

CAUTION:
When fixing the pump to vise, use an aluminum plate or such to avoid damaging the fitting plane of the steering pump.

2. Remove the front bracket mounting bolt, and remove the front bracket from the casing.
3. Remove the rear cover mounting bolt, and remove the rear cover from the casing.
4. Remove the O-ring from the casing.

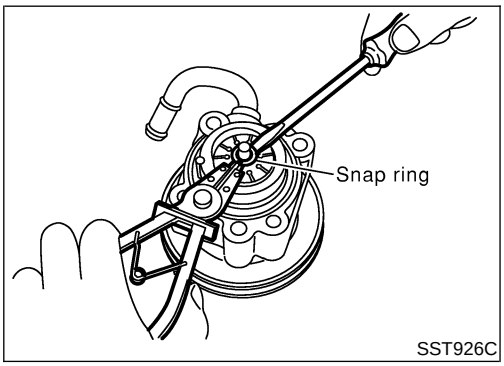

5. Remove side plate (rear side) from cam ring, then remove side plate inner/outer seals from side plate (rear side).
6. Remove rotor snap ring using snap ring pliers, and remove pulley from casing.

CAUTION:
Do not damage pulley shaft when removing rotor snap ring.

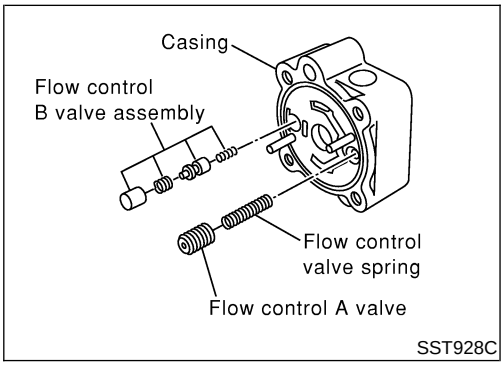

7. Remove the followings from casing.
- Cam ring
- Rotor
- Vane
- Side plate (front side)
- Flow control A valve
- Flow control valve spring
- Flow control B valve assembly

CAUTION:
Be careful not to drop flow control valve.

8. Remove inlet connector mounting bolt, and remove inlet connector from casing.
9. Remove inlet connector seal from inlet connector.
10. Remove drive shaft seal from casing with a screwdriver.

CAUTION:
Do not damage casing surface with the screwdriver.

Inspection

NCST0040

- If pulley is cracked or deformed, replace it.
- If an oil leak is found around pulley shaft oil seal, replace the seal.
- Check the casing and the inside of the rear body for damage. If damages are found in the rear body, replace the entire rear body. If the casing is damaged, replace the entire power steering pump as an assembly.
- Check the cam ring for damage. If damage is found, replace the cam ring, rotor and vane as a set.
- Check the side plates (front and rear) for damage. If damage

is found, replace the side plates as a set (front and rear).

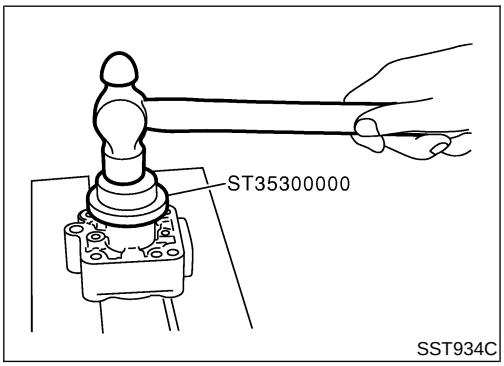

Assembly

NCST0041

1. Apply grease to the lip of the drive shaft seal, and attach the casing.

CAUTION:
The drive shaft seal cannot be reused. Always replace after every disassembly.

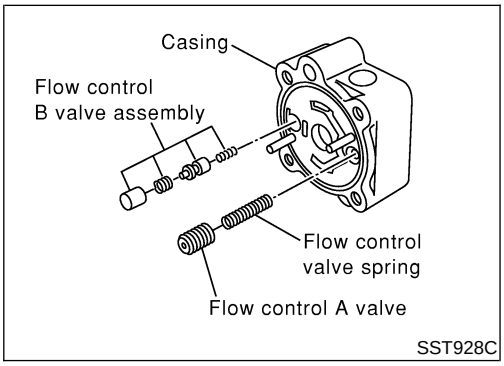

2. When removing the dowel pin, if it is difficult to insert with your hands, insert into the casing by tapping lightly with a hammer or similar tool.
3. Attach the flow control A valve, flow control valve spring, and the flow control B valve assembly to the locations indicated in the drawing left.

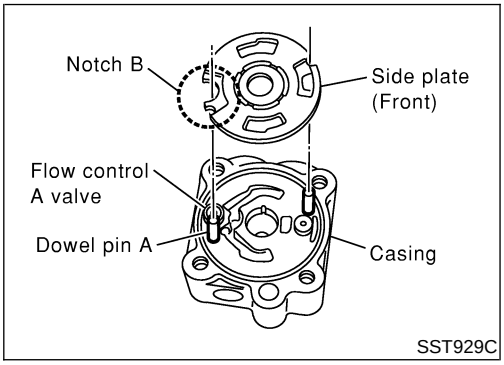

4. Match the dowel pin A on the flow control A valve side with the notch B of the side plate (front), and attach the side plate (front) to the casing.

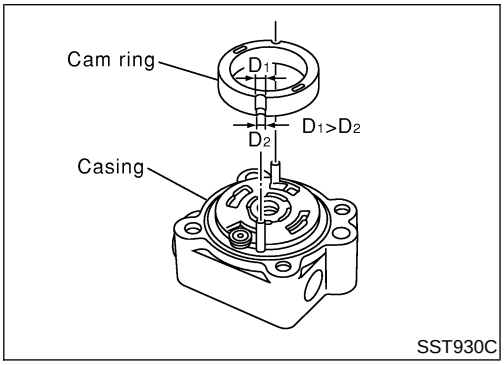

5. Face the cam ring side with fewer pores towards the casing, and attach the cam ring on top of the side plate (front).
6. Attach the pulley to the casing.

CAUTION:
Attach with care so as not to damage the drive shaft seal.

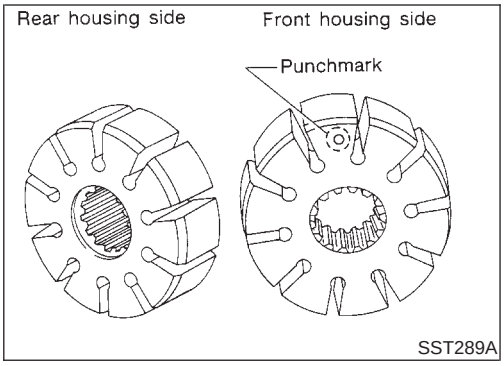

7. Face the side of the rotor with the punch mark towards the casing, and attach the rotor to the pulley shaft.

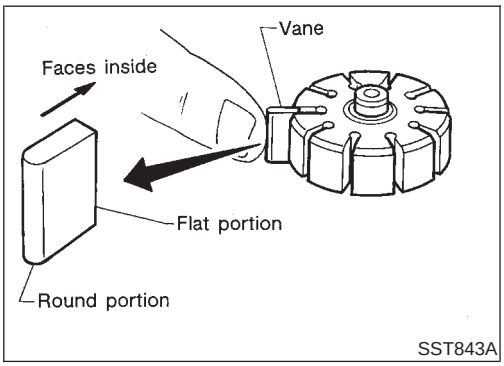

8. Attach the vane to the rotor so that the vane's arc touches the cam ring.

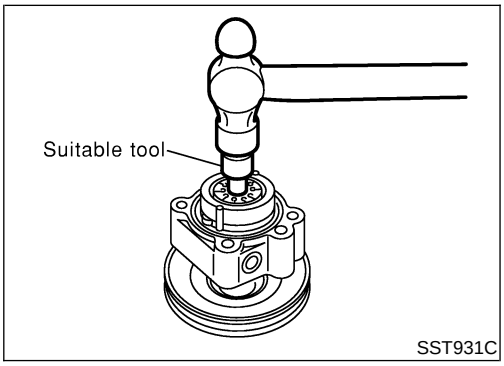

9. Use a hammer or suitable tool to insert the rotor snap ring into the pulley shaft channel.

CAUTION:

- **The rotor snap ring cannot be reused. Always replace after every disassembly.**
- **Insert with care so as not to damage the rotor or the pulley shaft.**
- **If the rotor is damaged, replace the power steering as an assembly.**

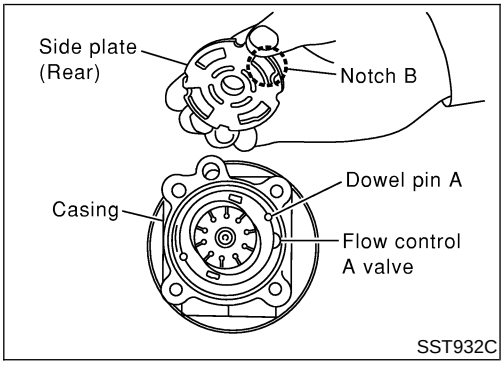

10. Match the dowel pin A on the flow control A valve side with the notch B of the side plate (rear), and attach the side plate (rear) to the cam ring.
11. Apply Genuine Nissan PSF II or equivalent to O-ring and attach to the casing.

CAUTION:

The O-ring cannot be reused. Always replace after every disassembly.

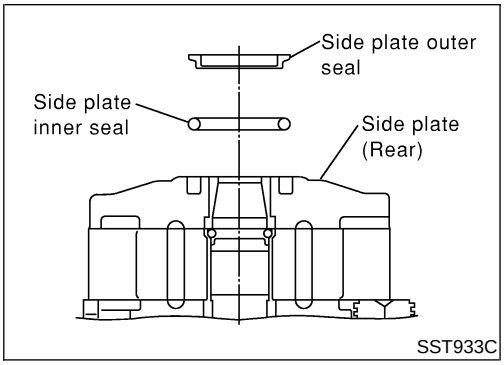

12. Attach a side plate inner seal and side plate outer seal with Genuine Nissan PSF II or equivalent applied, to the side plate (rear).

CAUTION:

The side plate inner seal and outer seal cannot be reused. Always replace after every disassembly.

13. Set the power steering pump on the vice.

CAUTION:

When securing to the vice, use an aluminum plate or other material to protect the installation surface of the power steering pump from damage.

14. Attach the rear body to the casing, and secure the bolts (4 bolts) in a diagonal order to the specified torque.
15. Attach the front bracket to the casing, and secure the bolts (2 bolts) to the specified torque.
16. Attach the inlet collector seal to the grooves of the inlet collector, and attach the inlet collector to the casing with attachment bolts.

CAUTION:
The inlet collector seal cannot be reused. Always replace after every disassembly.

General Specifications

NCST0032

Steering model	Power steering
Steering gear type	PR24AC
Steering overall gear ratio	17.7
Turns of steering wheel (Lock to lock)	2.84
Steering column type	Collapsible, tilt

Steering Wheel

NCST0033

Steering wheel axial play mm (in)	0 (0)
Steering wheel play mm (in)	35 (1.38) or less
Movement of gear housing mm (in)	±2 (±0.08) or less

Steering Column

NCST0034

Applied model	All
Steering column length “L” mm (in)	535.9 - 538.1 (21.10 - 21.18)

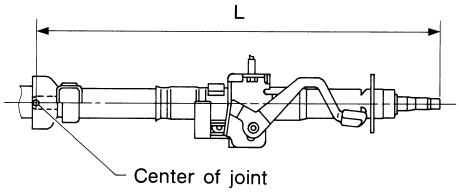

SST334C

Steering Gear and Linkage

NCST0035

Applied model		All
Steering gear type		PR24AC
Tie-rod outer ball joint	Swinging force at cotter pin hole: “A” N (kg, lb)	6.9 - 65.7 (0.7 - 6.7, 1.5 - 14.8)
	Rotating torque: “B” N·m (kg-cm, in-lb)	0.29 - 2.94 (3.0 - 30.0, 2.6 - 26.0)
	Axial end play: “C” mm (in)	0.5 (0.020) or less
Tie-rod inner ball joint	Swinging force*: “A” N (kg, lb)	5.9 - 46.1 (0.6 - 4.7, 1.3 - 10.4)
	Axial end play: “C” mm (in)	0.2 (0.004) or less
Tie-rod standard length “L” mm (in)		164.6 (6.480)

*: Measuring point [ℓ: 170 mm (6.69 in)]

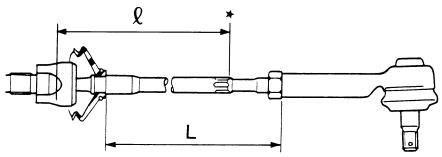

SST488C

Retainer adjustment Adjusting screw	Initial tightening torque N·m (kg-cm, in-lb)	4.9 - 5.9 (50 - 60, 43 - 52)
	Retightening torque after loosening N·m (kg-cm, in-lb)	0.2 (2, 1.7)
	Tightening torque after gear has settled N·m (kg-cm, in-lb)	4.9 - 5.9 (50 - 60, 43 - 52)
	Returning angle degree	40° - 60°
Steering gear type		PR24AC
Rack stroke “S” mm (in)		66.0 (2.60)

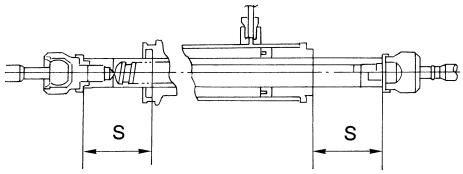

SST086BA

Power Steering

NCST0036

Applied model			All
Steering gear type			PR24AC
Rack sliding force N (kg, lb) Under normal operating oil pressure	Range within ±11.5 mm (±0.453 in) from the neutral position at rack speed of 3.5 mm (0.138 in)/s	Average force	167 - 226 (17 - 23, 37 - 51)
		Maximum force deviation	98 (10, 22)
	Except for the above range	Maximum sliding force	294 (30, 66)
		Maximum force deviation	147 (15, 33)
Steering wheel turning force (Measured at one full turn from the neutral position) N (kg, lb)			39 (4, 9) or less
Fluid capacity (Approximate) ℓ (US qt, Imp qt)			0.9 (1, 3/4)
Oil pump maximum pressure kPa (kg/cm^2, psi)			8,140 - 8,728 (83 - 89, 1,180 - 1,266)

NOTES