ENGINE LUBRICATION & COOLING SYSTEMS

SECTION LC

CONTENTS

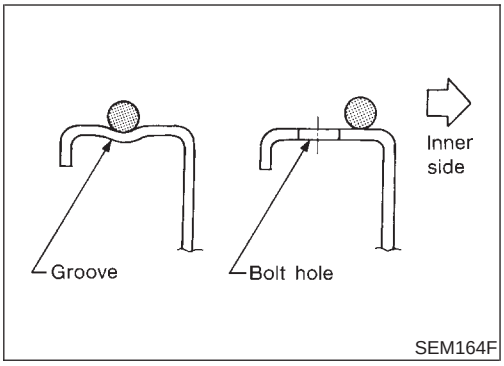

SEM164F

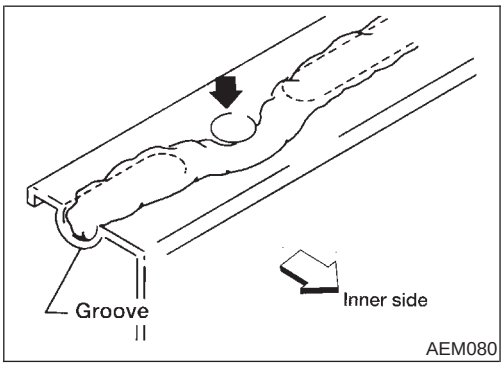

AEM080

Precautions

LIQUID GASKET APPLICATION PROCEDURE

NCLC0001

1. Use a scraper to remove all traces of old liquid gasket from mating surfaces and grooves. Also, completely clean any oil from these areas.
2. Apply a continuous bead of liquid gasket to mating surfaces. **(Use Genuine RTV silicone sealant part No. 999MP-A7007 or equivalent.)**

- For oil pan, be sure liquid gasket diameter is 4.0 to 5.0 mm (0.157 to 0.197 in).
- For areas except oil pan, be sure liquid gasket diameter is 2.0 to 3.0 mm (0.079 to 0.118 in).

3. Apply liquid gasket around the inner side of bolt holes (unless otherwise specified).
4. Assembly should be done within 5 minutes after coating.
5. Wait at least 30 minutes before refilling engine oil and engine coolant.

Preparation

SPECIAL SERVICE TOOLS

NCLC0002

The actual shapes of Kent-Moore tools may differ from those of special service tools illustrated here.

Tool number (Kent-Moore No.) Tool name	Description	
(J34301-C) Oil pressure gauge set 1 (J34301-1) Oil Pressure gauge 2 (J34301-2) Hoses 3 (J34298) Adapter 4 (J34282-1) Adapter 5 (790-301-1230-A) 60° adapter 6 (J34301-15) Square socket	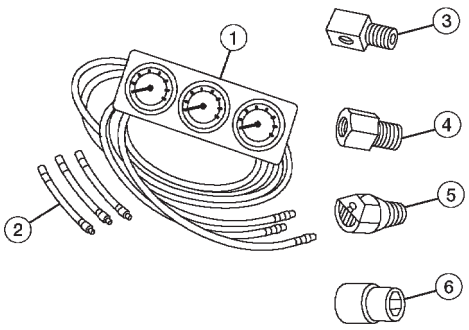 AAT896	Measuring oil pressure **Maximum measuring range:** **1,379 kPa (14 kg/cm^2, 200 psi)**
ST25052000 (J25695-2) Hose	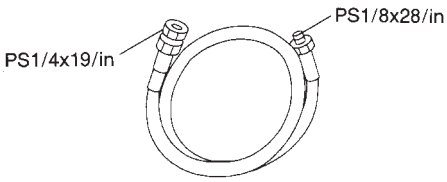 NT559	Adapting oil pressure gauge to cylinder block
KV10115801 (J38956) Oil filter wrench	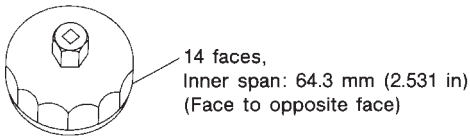 NT362	Removing oil filter

Tool number (Kent-Moore No.) Tool name	Description
WS39930000 (—) Tube presser	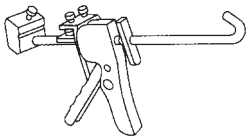 NT052 Pressing the tube of liquid gasket

Lubrication Circuit

NCLC0003

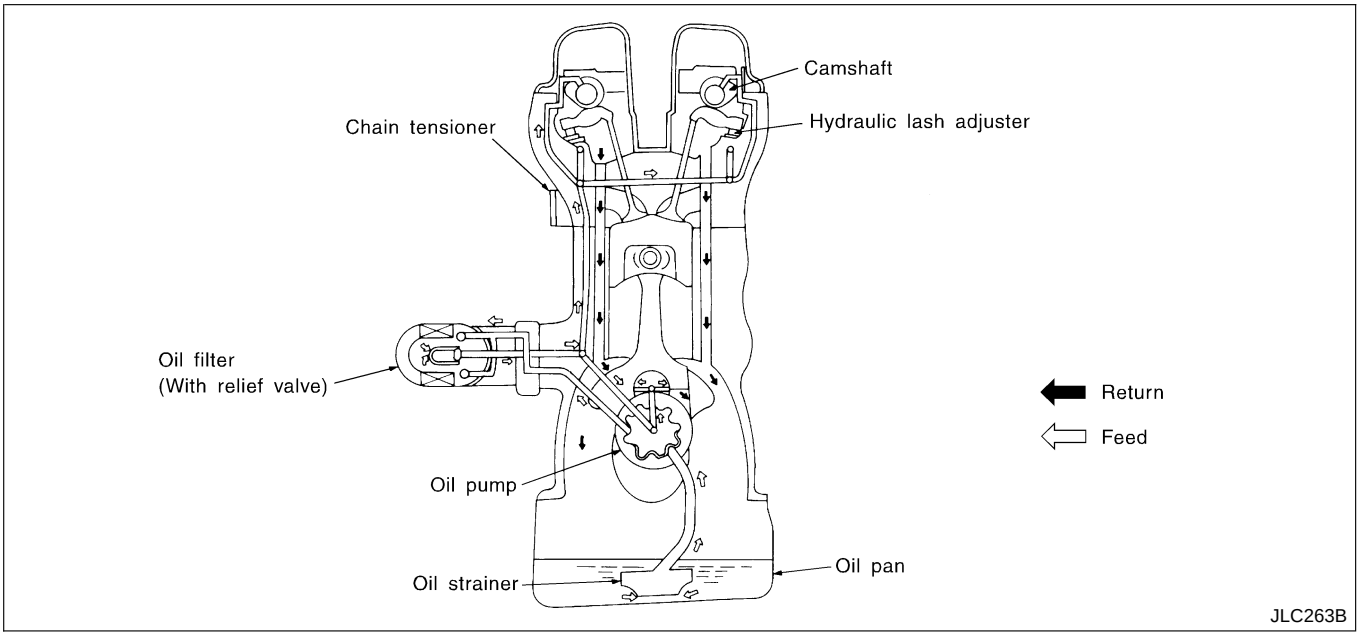

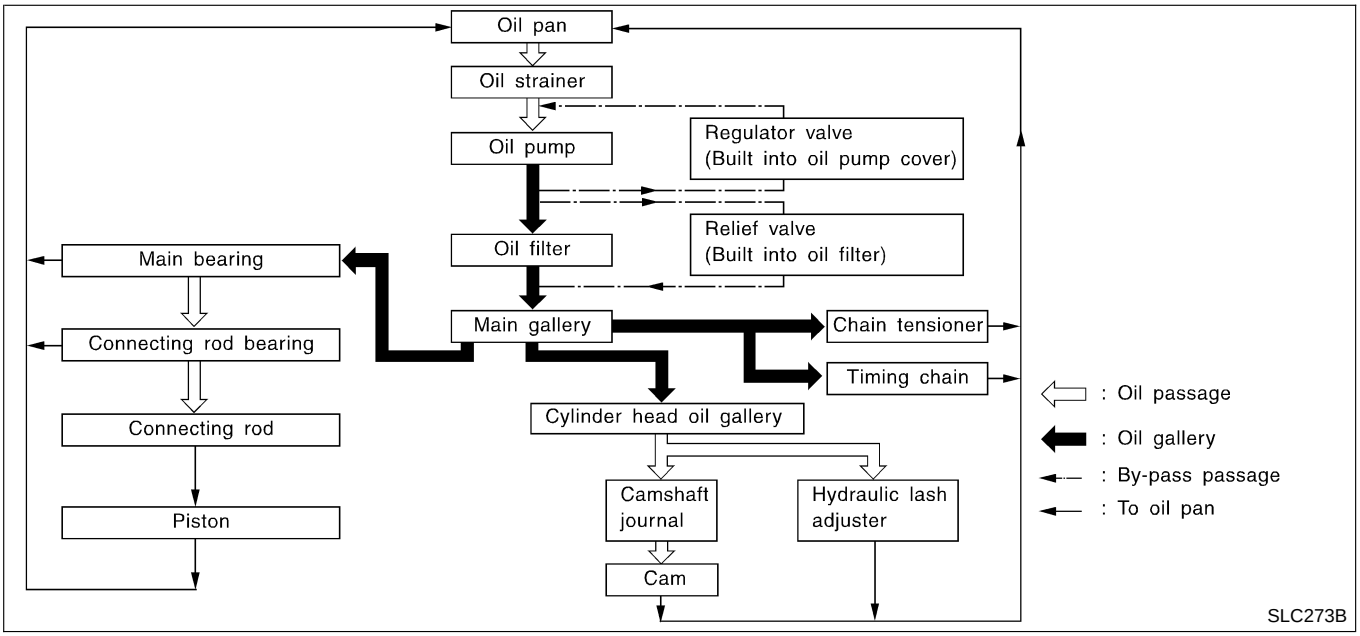

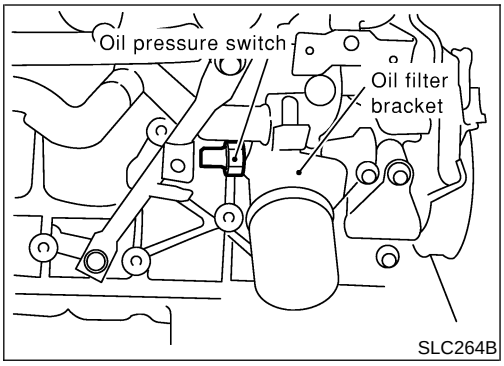

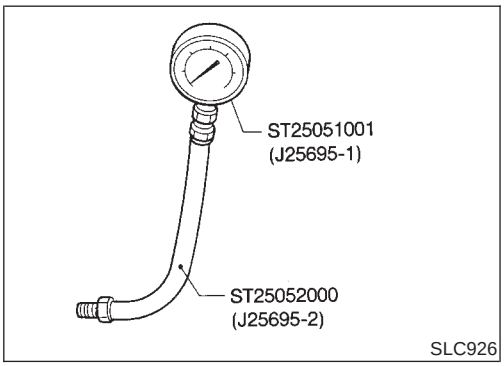

Oil Pressure Check

NCLC0004

WARNING:

- **Be careful not to burn yourself, as the engine and oil may be hot.**
- **For M/T models, put gearshift lever in Neutral "N" position. For A/T models, put selector lever in Park "P" position.**

1. Check oil level.
2. Remove oil pressure switch.
3. Install pressure gauge.
4. Start engine and warm it up to normal operating temperature.
5. Check oil pressure with engine running under no-load.

Engine speed rpm	Approximate discharge pressure kPa (kg/cm^2, psi)
Idle speed	More than 80 (0.82, 11.7)
3,200	314 - 392 (3.2 - 4.0, 46 - 57)

- **If difference is extreme, check oil passage and oil pump for oil leaks.**

6. Install oil pressure switch with sealant.

Oil Pump

REMOVAL

NCLC0005

1. Remove drive belts.
2. Remove cylinder head. Refer to EM-31, "Removal".
3. Remove oil pans. Refer to EM-14, "Removal".
4. Remove oil strainer and baffle plate.
5. Remove front cover assembly.

DISASSEMBLY AND ASSEMBLY

NCLC0006

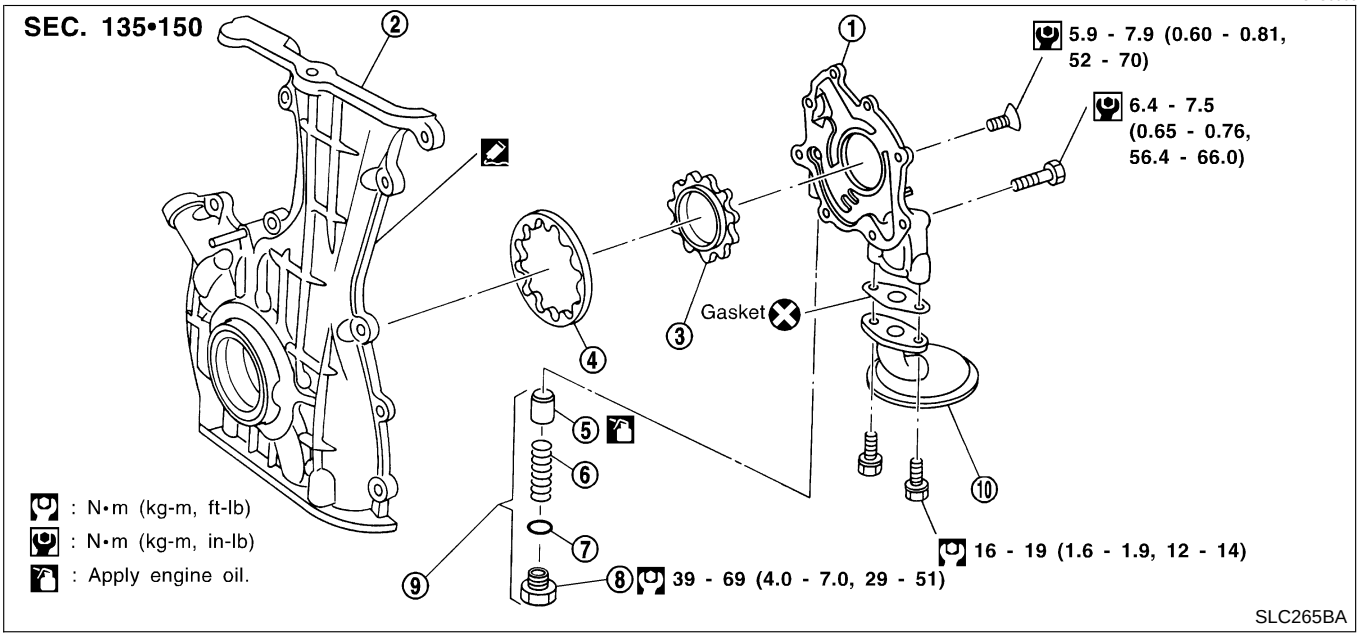

1. Oil pump cover
2. Front cover
3. Inner gear
4. Outer gear
5. Regulator valve
6. Spring
7. Shim
8. Plug
9. Regulator valve assembly
10. Oil strainer

INSPECTION

NCLC0007

Using a feeler gauge, check the following clearances:

Standard clearance:

Unit: mm (in)

Body to outer gear radial clearance 1	0.114 - 0.200 (0.0045 - 0.0079)
Inner gear to outer gear tip clearance 2	Below 0.18 (0.0071)
Body to inner gear clearance 3	0.05 - 0.09 (0.0020 - 0.0035)
Body to outer gear axial clearance 4	0.05 - 0.11 (0.0020 - 0.0043)
Inner gear to brazed portion of housing clearance 5	0.045 - 0.091 (0.0018 - 0.0036)

- **If the tip clearance (2) exceeds the limit, replace gear set.**
- **If body to gear clearances (1, 3, 4, 5) exceed the limit, replace front cover assembly.**

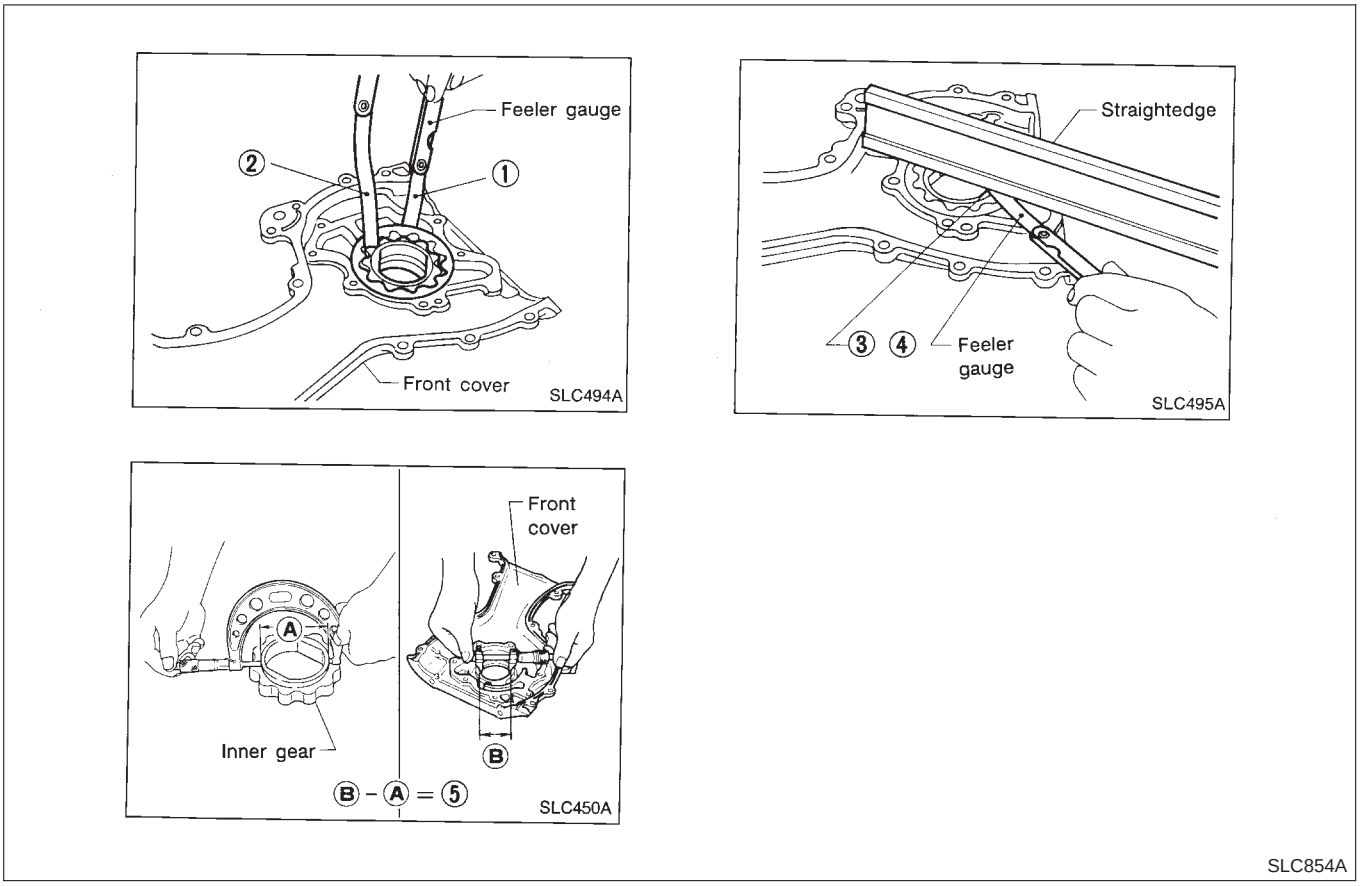

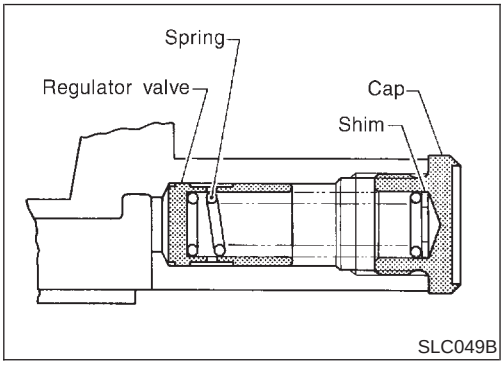

REGULATOR VALVE INSPECTION

NCLC0008

1. Visually inspect components for wear and damage.
2. Check oil pressure regulator valve sliding surface and valve spring.
3. Coat regulator valve with engine oil. Check that it falls smoothly into the valve hole by its own weight.

- **If damaged, replace regulator valve set or oil pump assembly.**

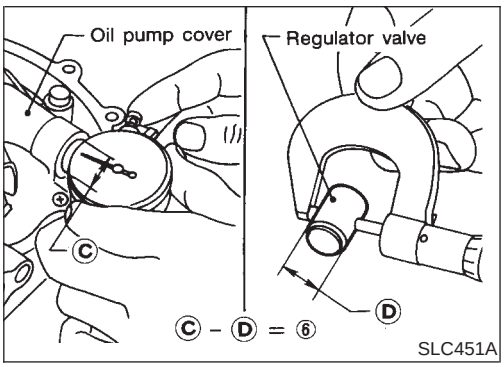

4. Check regulator valve to oil pump cover clearance.

   Clearance:

   6: 0.040 - 0.097 mm (0.0016 - 0.0038 in)

- **If it exceeds the limit, replace oil pump cover.**

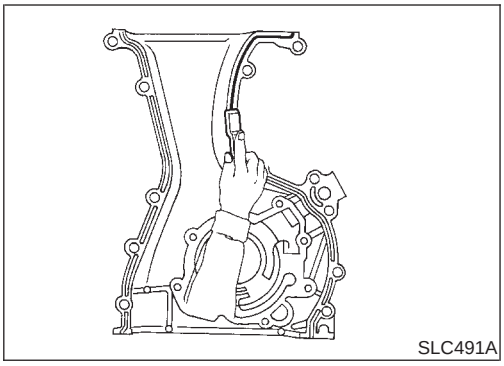

INSTALLATION

NCLC0009

- **Always replace oil seal and O-ring with new ones. Refer to EM-28, "OIL SEAL REPLACEMENT".**
- **When installing oil pump, apply engine oil to gears.**
- **Be sure that O-rings are properly fitted.**
- **Use a scraper to remove old liquid gasket from mating surface of front cover.**
- **Also remove traces of liquid gasket from mating surface of cylinder block.**

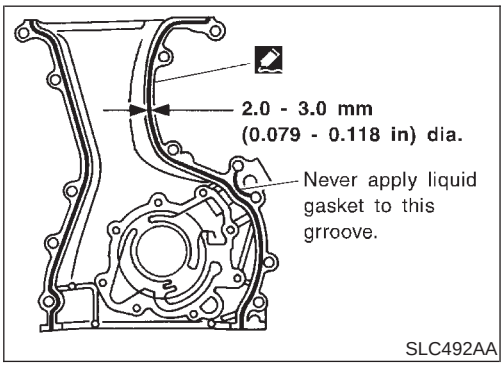

1. Apply a continuous bead of liquid gasket to mating surface of front cover assembly.
   - **Use Genuine RTV silicone sealant part No. 999MP-A7007 or equivalent.**
2. Installation is in the reverse order of removal.

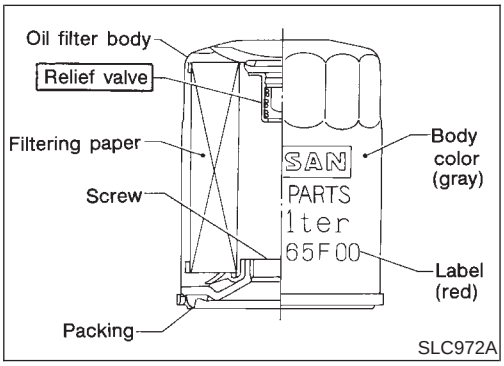

Oil Filter

NCLC0010

The oil filter is a small, full-flow cartridge type and is provided with a relief valve.

- **Use Tool KV10115801 (J38956) for removing oil filter.**

Service Data and Specifications (SDS)

OIL PRESSURE CHECK

NCLC0011

Engine speed rpm	Approximate discharge pressure kPa (kg/cm^2, psi)
Idle speed	More than 80 (0.82, 11.7)
3,200	314 - 392 (3.2 - 4.0, 46 - 57)

REGULATOR VALVE INSPECTION

NCLC0012

Unit: mm (in)

Regulator valve to oil pump cover clearance	0.040 - 0.097 (0.0016 - 0.0038)

OIL PUMP INSPECTION

NCLC0013

Unit: mm (in)

Body to outer gear radial clearance	0.114 - 0.200 (0.0045 - 0.0079)
Inner gear to outer gear tip clearance	Below 0.18 (0.0071)
Body to inner gear clearance	0.05 - 0.09 (0.0020 - 0.0035)
Body to outer gear axial clearance	0.05 - 0.11 (0.0020 - 0.0043)
Inner gear to brazed portion of housing clearance	0.045 - 0.091 (0.0018 - 0.0036)

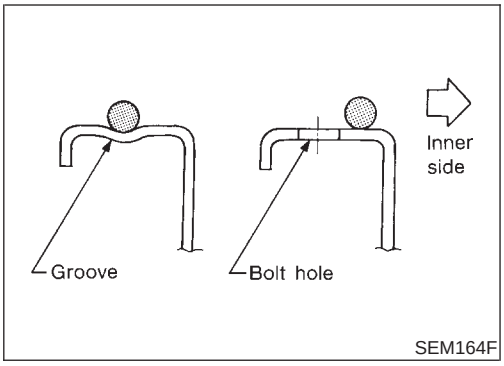

SEM164F

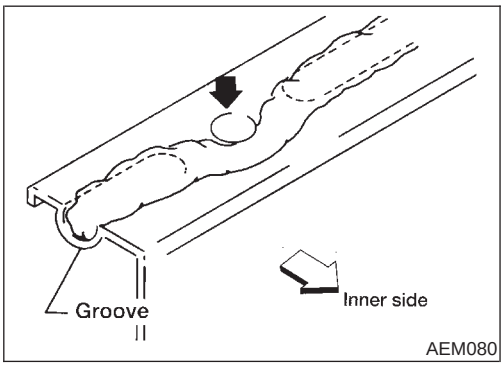

AEM080

Precautions

LIQUID GASKET APPLICATION PROCEDURE

NCLC0014

1. Use a scraper to remove all traces of old liquid gasket from mating surfaces and grooves. Also, completely clean any oil from these areas.
2. Apply a continuous bead of liquid gasket to mating surfaces. **(Use Genuine RTV silicone sealant part No. 999MP-A7007 or equivalent.)**

- For oil pan, be sure liquid gasket diameter is 4.0 to 5.0 mm (0.157 to 0.197 in).
- For areas except oil pan, be sure liquid gasket diameter is 2.0 to 3.0 mm (0.079 to 0.118 in).

3. Apply liquid gasket around the inner side of bolt holes (unless otherwise specified).
4. Assembly should be done within 5 minutes after coating.
5. Wait at least 30 minutes before refilling engine oil and engine coolant.

Preparation

SPECIAL SERVICE TOOL

NCLC0015

The actual shapes of Kent-Moore tools may differ from those of special service tools illustrated here.

Tool number (Kent-Moore No.) Tool name	Description
EG17650301 (J33984-A) Radiator cap tester adapter	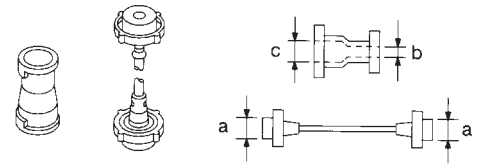 NT564 Adapting radiator cap tester to radiator filler neck **a: 28 (1.10) dia.** **b: 31.4 (1.236) dia.** **c: 41.3 (1.626) dia.** Unit: mm (in)

Cooling Circuit

NCLC0016

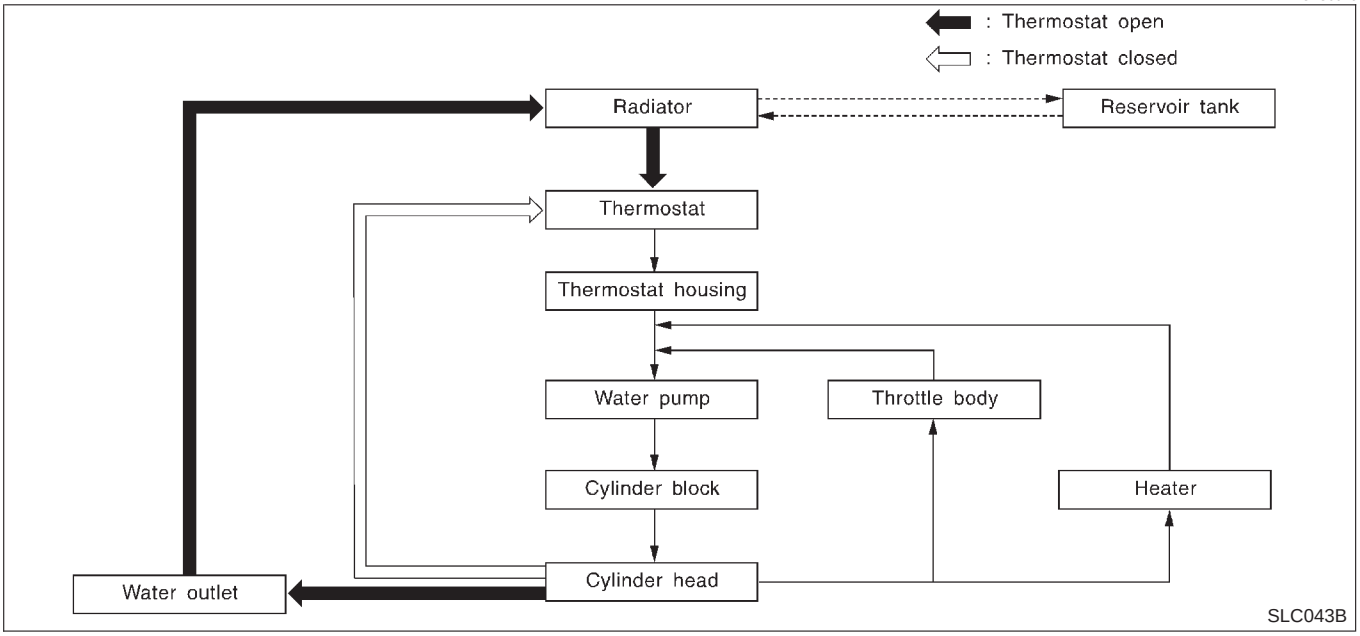

System Check

NCLC0017

WARNING:

Never remove the radiator cap when the engine is hot. Serious burns could occur from high pressure coolant escaping from the radiator.

Wrap a thick cloth around the cap. Slowly turn it a quarter turn to allow built-up pressure to escape. Carefully remove the cap by turning it all the way.

CHECKING COOLING SYSTEM HOSES

NCLC0017S01

Check hoses for the following:

- Improper attachment
- Leaks
- Cracks
- Damage
- Chafing
- Deterioration

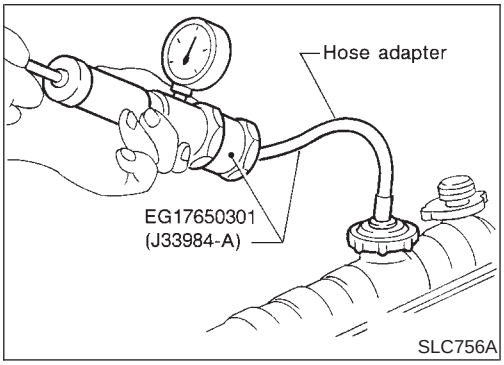

CHECKING COOLING SYSTEM FOR LEAKS

NCLC0017S02

To check for leakage, apply pressure to the cooling system with a tester.

Testing pressure:

157 kPa (1.6 kg/cm^2, 23 psi)

CAUTION:

Higher pressure than specified may cause radiator damage.

CHECKING RADIATOR

NCLC0017S04

Check radiator for mud or clogging. If necessary, clean radiator as follows.

- Be careful not to bend or damage the radiator fins.
- When radiator is cleaned without removal, remove all surrounding parts such as cooling fan, rediator shroud and horns. Then tape the harness and connectors to prevent water from entering.

1. Apply water by hose to the back side of the radiator core vertically download.
2. Apply water again to all radiator core surfaces once per minute.
3. Stop washing if any stains no longer flow out from the radiator.
4. Blow air into the back side of radiator core vertically download.

- Use compressesd air lower than 490 kPa (5 kg/cm^2, 71 psi) and keep distance more than 30 cm (11.8 in).

5. Blow air again into all the radiator core surfaces once per minute until no water sprays out.

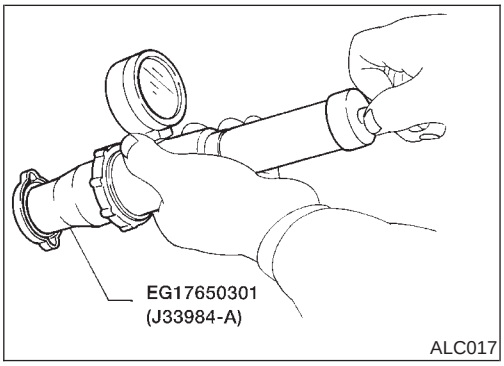

CHECKING RADIATOR CAP

NCLC0017S03

To check radiator cap, apply pressure to cap with a tester.

Radiator cap relief pressure:

Standard

78 - 98 kPa (0.8 - 1.0 kg/cm^2, 11 - 14 psi)

Limit

59 - 98 kPa (0.6 - 1.0 kg/cm^2, 9 - 14 psi)

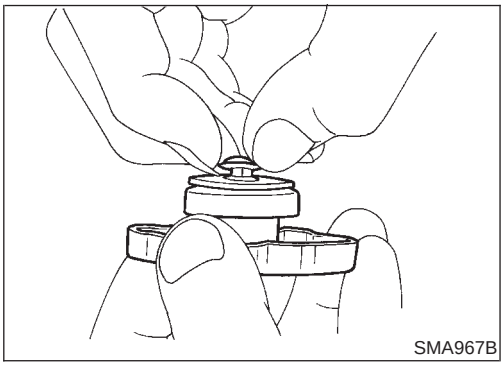

Pull the negative pressure valve to open it.
Check that it closes completely when released.

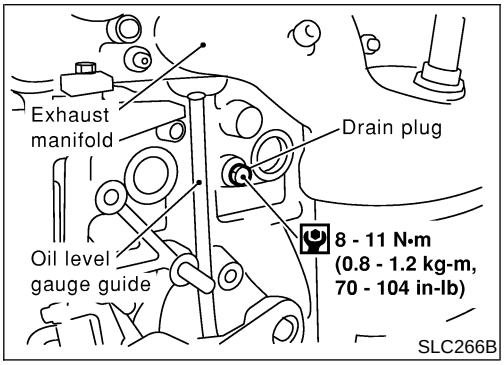

Water Pump

REMOVAL

NCLC0018

1. Drain coolant from radiator.
2. Remove cylinder block drain plug located at left front of cylinder block and drain coolant.
3. Remove front RH wheel and engine side cover.
4. Remove drive belts. Refer to MA-13, "Checking Drive Belts".
5. Remove RH engine mounting. Refer to EM-53, "ENGINE REMOVAL".

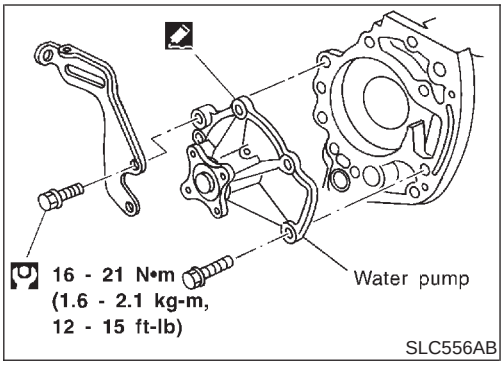

SLC556AB

6. Remove water pump.

CAUTION:

- **When removing water pump assembly, be careful not to get coolant on drive belt.**
- **Water pump cannot be disassembled and should be replaced as a unit.**
- **After installing water pump, connect hose and clamp securely, then check for leaks using radiator cap tester.**

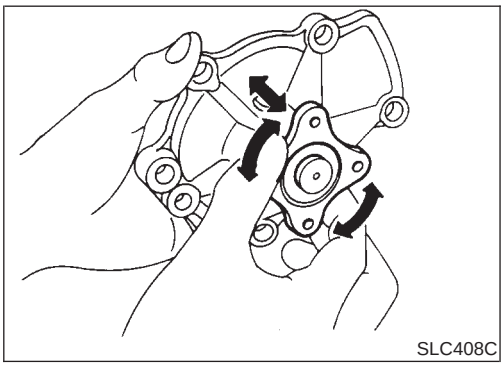
SLC408C

INSPECTION

NCLC0019

- Check body assembly for rust or corrosion.
- Check for rough operation due to excessive end play.

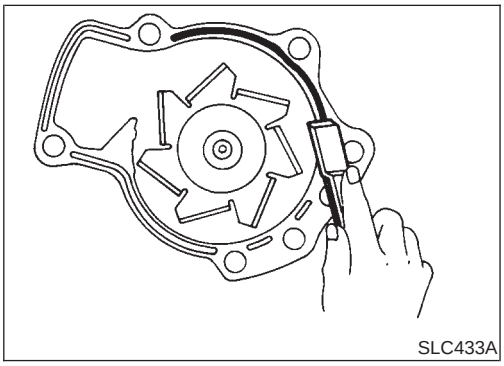
SLC433A

INSTALLATION

NCLC0020

1. Use a scraper to remove liquid gasket from water pump.
- **Also remove traces of liquid gasket from mating surface of cylinder block.**

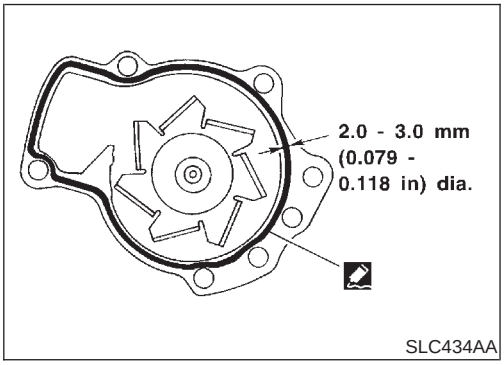

SLC434AA

2. Apply a continuous bead of liquid gasket to mating surface of water pump.
- **Use Genuine RTV silicone sealant part No. 999MP-A7007 or equivalent.**

When filling radiator with coolant, refer to MA-14, "Changing Engine Coolant".
When installing drive belts, refer to MA-13, "Checking Drive Belts".

Thermostat

REMOVAL AND INSTALLATION

NCLC0021

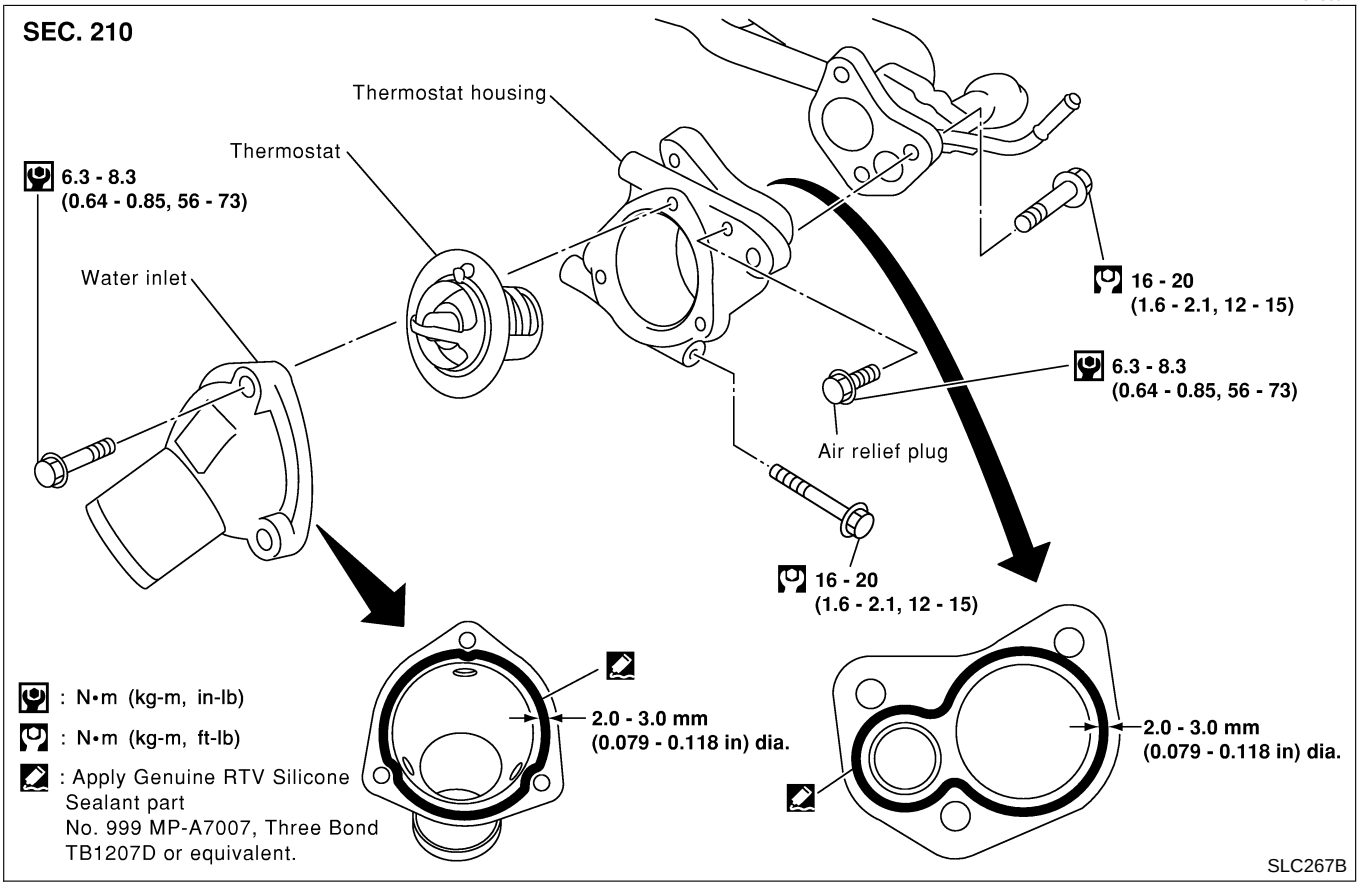

Be careful not to spill coolant over engine compartment. Use a rag to absorb coolant.

1. Drain engine coolant.
2. Remove lower radiator hose.
3. Remove water inlet, then take out thermostat.

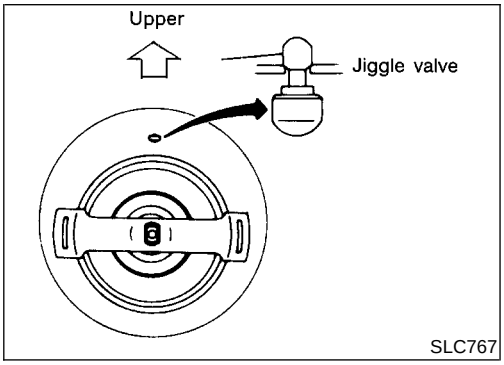

4. Install thermostat with jiggle valve or air bleeder at upper side.

- **Apply a continuous bead of liquid gasket to mating surface of water inlet.**
- **After installation, run engine for a few minutes, and check for leaks.**

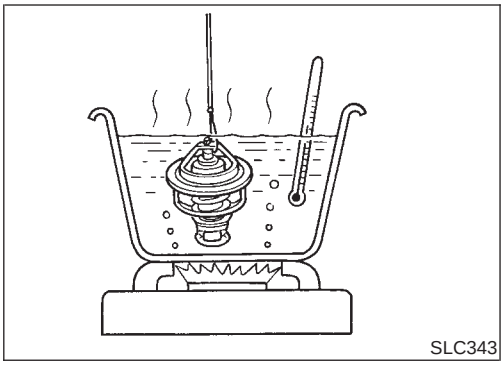

INSPECTION

NCLC0022

1. Check for valve seating condition at normal room temperature. It should seat tightly.
2. Check valve opening temperature and valve lift.

Valve opening temperature °C (°F)	82 (180)
Valve lift mm/°C (in/°F)	More than 8/95 (0.31/203)

3. Then check if valve closes at 5°C (9°F) below valve opening temperature.

Water Outlet

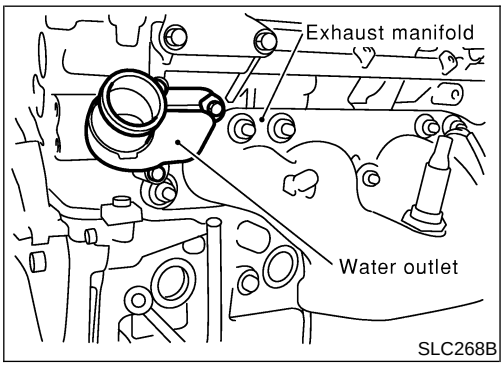

INSPECTION

NCLC0023

Visually inspect for water leaks. If there is leakage, apply liquid gasket.

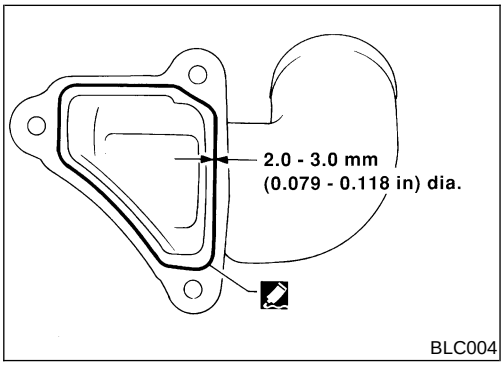

INSTALLATION

NCLC0024

1. Use a scraper to remove old liquid gasket from water outlet.

- **Also remove traces of liquid gasket from mating surface of cylinder head.**

2. Apply a continuous bead of liquid gasket to mating surface of water outlet.

- **Use Genuine RTV silicone sealant part No. 999MP-A7007 or equivalent.**
- **When installing, tighten water outlet bolts to the specified torque.**

  : 6.3 - 8.3 N·m (0.64 - 0.85 kg-m, 55.6 - 73.8 in-lb)

Radiator

COMPONENTS

NCLC0025

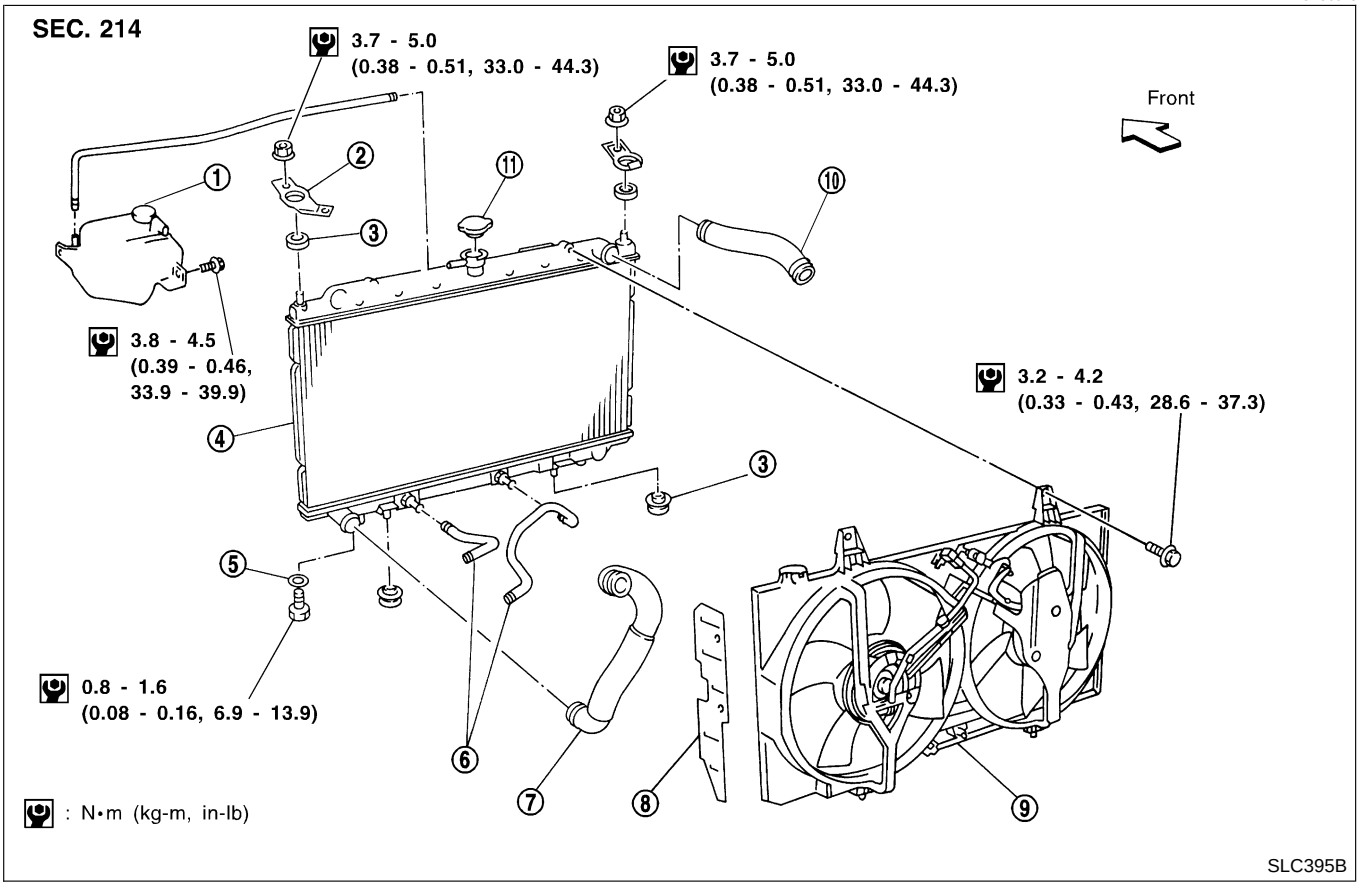

1. Reservoir tank
2. Mounting bracket
3. Mounting rubber
4. Radiator
5. Washer
6. Oil cooler hose (A/T models)
7. Lower hose
8. Air guide plate
9. Cooling fan assembly
10. Upper hose
11. Radiator cap

Cooling Fan Control System

NCLC0026

Cooling fans are controlled by the ECM. For details, refer to EC-420, “Cooling Fan”.

Refilling Engine Coolant

NCLC0027

For details on refilling engine coolant, refer to MA-14, “Changing Engine Coolant”.

Overheating Cause Analysis

NCLC0028

	Symptom		Check items	
Cooling system parts malfunction	Poor heat transfer	Water pump malfunction	Worn or loose drive belt	—
		Thermostat stuck closed	—	
		Damaged fins	Dust contamination or paper clogging	
			Mechanical damage	
		Clogged radiator cooling tube	Excess foreign material (rust, dirt, sand, etc.)	
	Reduced air flow	Cooling fan does not operate	—	—
		High resistance to fan rotation		
		Damaged fan blades		
	Damaged radiator shroud	—	—	—
	Improper coolant mixture ratio	—	—	—
	Poor coolant quality	—	—	—
	Insufficient coolant	Coolant leaks	Cooling hose	Loose clamp
				Cracked hose
			Water pump	Poor sealing
			Radiator cap	Loose
				Poor sealing
			Radiator	O-ring for damage, deterioration or improper fitting
				Cracked radiator tank
				Cracked radiator core
			Reservoir tank	Cracked reservoir tank
		Overflowing reservoir tank	Exhaust gas leaks into cooling system	Cylinder head deterioration
				Cylinder head gasket deterioration

Overheating Cause Analysis (Cont'd)

	Symptom		Check items	
Except cooling system parts malfunction	—	Overload on engine	Abusive driving	High engine rpm under no load
				Driving in low gear for extended time
				Driving at extremely high speed
			Powertrain system malfunction	—
			Installed improper size wheels and tires	
			Dragging brakes	
			Improper ignition timing	
	Blocked or restricted air flow	Blocked bumper	—	—
		Blocked radiator grille	Installed car brassiere	
			Mud contamination or paper clogging	
		Blocked radiator	—	
		Blocked condenser	—	
		Installed large fog lamp		

Service Data and Specifications (SDS)

THERMOSTAT

NCLC0029

Valve opening temperature °C (°F)	82 (180)
Valve lift mm/°C (in/°F)	More than 8/95 (0.31/203)

RADIATOR

NCLC0030

Unit: kPa (kg/cm^2, psi)

Cap reliefpressure	Standard	78 - 98 (0.8 - 1.0, 11 - 14)
	Limit	59 - 98 (0.6 - 1.0, 9 - 14)
Leakage test pressure		157 (1.6, 23)