SECTION EC
ENGINE CONTROL SYSTEM

CONTENTS

VQ35DE

VK45DE

INDEX FOR DTC

PFP:00024

DTC No. Index

ABS006JW

NOTE:
If DTC U1000 or U1001 is displayed with other DTC, first perform the trouble diagnosis for DTC U1000, U1001. Refer to EC-171, "DTC U1000, U1001 CAN COMMUNICATION LINE" .

DTC*1		Items (CONSULT-II screen terms)	Reference page
CONSULT-II GST*2	ECM*3		
U1000	1000*4	CAN COMM CIRCUIT	EC-171
U1001	1001*4	CAN COMM CIRCUIT	EC-171
P0000	**0000**	**NO DTC IS DETECTED. FURTHER TESTING MAY BE REQUIRED.**	**—**
P0011	0011	INT/V TIM CONT-B1	EC-174
P0021	0021	INT/V TIM CONT-B2	EC-174
P0037	0037	HO2S2 HTR (B1)	EC-178
P0038	0038	HO2S2 HTR (B1)	EC-178
P0057	0057	HO2S2 HTR (B2)	EC-178
P0058	0058	HO2S2 HTR (B2)	EC-178
P0101	0101	MAF SEN/CIRCUIT	EC-186
P0102	0102	MAF SEN/CIRCUIT	EC-195
P0103	0103	MAF SEN/CIRCUIT	EC-195
P0112	0112	IAT SEN/CIRCUIT	EC-203
P0113	0113	IAT SEN/CIRCUIT	EC-203
P0117	0117	ECT SEN/CIRCUIT	EC-208
P0118	0118	ECT SEN/CIRCUIT	EC-208
P0122	0122	TP SEN 2/CIRC	EC-213
P0123	0123	TP SEN 2/CIRC	EC-213
P0125	0125	ECT SENSOR	EC-220
P0127	0127	IAT SENSOR	EC-223
P0128	0128	THERMSTAT FNCTN	EC-226
P0138	0138	HO2S2 (B1)	EC-228
P0139	0139	HO2S2 (B1)	EC-237
P0158	0158	HO2S2 (B2)	EC-228
P0159	0159	HO2S2 (B2)	EC-237
P0171	0171	FUEL SYS-LEAN-B1	EC-248
P0172	0172	FUEL SYS-RICH-B1	EC-258
P0174	0174	FUEL SYS-LEAN-B2	EC-248
P0175	0175	FUEL SYS-RICH-B2	EC-258
P0181	0181	FTT SENSOR	EC-267
P0182	0182	FTT SEN/CIRCUIT	EC-273
P0183	0183	FTT SEN/CIRCUIT	EC-273
P0222	0222	TP SEN 1/CIRC	EC-278
P0223	0223	TP SEN 1/CIRC	EC-278
P0300	0300	MULTI CYL MISFIRE	EC-285
P0301	0301	CYL 1 MISFIRE	EC-285

DTC*1		Items (CONSULT-II screen terms)	Reference page
CONSULT-II GST*2	ECM*3		
P0302	0302	CYL 2 MISFIRE	EC-285
P0303	0303	CYL 3 MISFIRE	EC-285
P0304	0304	CYL 4 MISFIRE	EC-285
P0305	0305	CYL 5 MISFIRE	EC-285
P0306	0306	CYL 6 MISFIRE	EC-285
P0327	0327	KNOCK SEN/CIRC-B1	EC-295
P0328	0328	KNOCK SEN/CIRC-B1	EC-295
P0335	0335	CKP SEN/CIRCUIT	EC-300
P0340	0340	CMP SEN/CIRC-B1	EC-307
P0345	0345	CMP SEN/CIRC-B2	EC-307
P0420	0420	TW CATALYST SYS-B1	EC-316
P0430	0430	TW CATALYST SYS-B2	EC-316
P0441	0441	EVAP PURG FLOW/MON	EC-322
P0442	0442	EVAP SMALL LEAK	EC-327
P0444	0444	PURG VOLUME CONT/V	EC-336
P0445	0445	PURG VOLUME CONT/V	EC-336
P0447	0447	VENT CONTROL VALVE	EC-343
P0451	0451	EVAP SYS PRES SEN	EC-350
P0452	0452	EVAP SYS PRES SEN	EC-353
P0453	0453	EVAP SYS PRES SEN	EC-359
P0455	0455	EVAP GROSS LEAK	EC-367
P0456	0456	EVAP VERY SML LEAK	EC-375
P0460	0460	FUEL LEV SEN SLOSH	EC-385
P0461	0461	FUEL LEVEL SENSOR	EC-387
P0462	0462	FUEL LEVL SEN/CIRC	EC-389
P0463	0463	FUEL LEVL SEN/CIRC	EC-389
P0500	0500	VEH SPEED SEN/CIRC*5	EC-391
P0506	0506	ISC SYSTEM	EC-393
P0507	0507	ISC SYSTEM	EC-395
P0550	0550	PW ST P SEN/CIRC	EC-397
P0605	0605	ECM	EC-402
P0700	0700	TCM	AT-113
P0705	0705	PNP SW/CIRC	AT-114
P0710	0710	ATF TEMP SEN/CIRC	AT-136
P0720	0720	VEH SPD SEN/CIR AT*5	AT-118
P0725	0725	ENGINE SPEED SIG	AT-123
P0740	0740	TCC SOLENOID/CIRC	AT-125
P0744	0744	A/T TCC S/V FNCTN	AT-127
P0745	0745	L/PRESS SOL/CIRC	AT-129
P1031	1031	A/F SEN1 HTR (B1)	EC-405
P1032	1032	A/F SEN1 HTR (B1)	EC-405
P1051	1051	A/F SEN1 HTR (B2)	EC-405

DTC*1		Items (CONSULT-II screen terms)	Reference page
CONSULT-II GST*2	ECM*3		
P1052	1052	A/F SEN1 HTR (B2)	EC-405
P1065	1065	ECM BACK UP/CIRCUIT	EC-413
P1111	1111	INT/V TIM V/CIR-B1	EC-417
P1121	1121	ETC ACTR	EC-424
P1122	1122	ETC FUNCTION/CIRC	EC-426
P1124	1124	ETC MOT PWR	EC-432
P1126	1126	ETC MOT PWR	EC-432
P1128	1128	ETC MOT	EC-437
P1136	1136	INT/V TIM V/CIR-B2	EC-417
P1146	1146	HO2S2 (B1)	EC-442
P1147	1147	HO2S2 (B1)	EC-453
P1148	1148	CLOSED LOOP-B1	EC-464
P1166	1166	HO2S2 (B2)	EC-442
P1167	1167	HO2S2 (B2)	EC-453
P1168	1168	CLOSED LOOP-B2	EC-464
P1211	1211	TCS C/U FUNCTN	EC-465
P1212	1212	TCS/CIRC	EC-466
P1217	1217	ENG OVER TEMP	EC-467
P1225	1225	CTP LEARNING	EC-479
P1226	1226	CTP LEARNING	EC-481
P1229	1229	SENSOR POWER/CIRC	EC-483
P1271	1271	A/F SENSOR1 (B1)	EC-488
P1272	1272	A/F SENSOR1 (B1)	EC-497
P1273	1273	A/F SENSOR1 (B1)	EC-506
P1274	1274	A/F SENSOR1 (B1)	EC-516
P1276	1276	A/F SENSOR1 (B1)	EC-526
P1278	1278	A/F SENSOR1 (B1)	EC-536
P1279	1279	A/F SENSOR1 (B1)	EC-548
P1281	1281	A/F SENSOR1 (B2)	EC-488
P1282	1282	A/F SENSOR1 (B2)	EC-497
P1283	1283	A/F SENSOR1 (B2)	EC-506
P1284	1284	A/F SENSOR1 (B2)	EC-516
P1286	1286	A/F SENSOR1 (B2)	EC-526
P1288	1288	A/F SENSOR1 (B2)	EC-536
P1289	1289	A/F SENSOR1 (B2)	EC-548
P1444	1444	PURG VOLUME CONT/V	EC-560
P1446	1446	VENT CONTROL VALVE	EC-568
P1564	1564	ASCD SW*6	EC-574, EC-581
P1568	1568	ICC COMMAND VALUE*7	EC-587
P1572	1572	ASCD BRAKE SW*6	EC-588, EC-597
P1574	1574	ASCD VHL SPD SEN*6	EC-605, EC-607
P1610 - P1615	1610 - 1615	NATS MALFUNCTION	EC-53

DTC*1		Items (CONSULT-II screen terms)	Reference page
CONSULT-II GST*2	ECM*3		
P1705	1705	TP SEN/CIRC A/T	AT-133
P1706	1706	P-N POS SW/CIRCUIT	EC-609
P1716	1716	TURBINE REV S/CIRC	AT-141
P1730	1730	A/T INTERLOCK	AT-145
P1752	1752	I/C SOLENOID/CIRC	AT-150
P1754	1754	I/C SOLENOID FNCTN	AT-152
P1757	1757	FR/B SOLENOID/CIRC	AT-154
P1759	1759	FR/B SOLENOID FNCT	AT-156
P1762	1762	D/C SOLENOID/CIRC	AT-158
P1764	1764	D/C SOLENOID FNCTN	AT-160
P1767	1767	HLR/C SOL/CIRC	AT-162
P1769	1769	HLR/C SOL FNCTN	AT-164
P1772	1772	LC/B SOLENOID/CIRC	AT-166
P1774	1774	LC/B SOLENOID FNCT	AT-168
P1805	1805	BRAKE SW/CIRCUIT	EC-614
P2122	2122	APP SEN 1/CIRC	EC-619
P2123	2123	APP SEN 1/CIRC	EC-619
P2127	2127	APP SEN 2/CIRC	EC-626
P2128	2128	APP SEN 2/CIRC	EC-626
P2135	2135	TP SENSOR	EC-633
P2138	2138	APP SENSOR	EC-640

*1: 1st trip DTC No. is the same as DTC No.
*2: This number is prescribed by SAE J2012.
*3: In Diagnostic Test Mode II (Self-diagnostic results), this number is controlled by NISSAN.
*4: The troubleshooting for this DTC needs CONSULT-II.
*5: When the fail-safe operations for both self-diagnoses occur, the MIL illuminates.
*6: For models with ICC or ASCD system.
*7: For models with ICC system.

Alphabetical Index

ABS006JV

NOTE:
If DTC U1000 or U1001 is displayed with other DTC, first perform the trouble diagnosis for DTC U1000, U1001. Refer to EC-171, "DTC U1000, U1001 CAN COMMUNICATION LINE" .

Items (CONSULT-II screen terms)	DTC*1		Reference page
	CONSULT-II GST*2	ECM*3	
A/F SENSOR1 (B1)	P1271	1271	EC-488
A/F SENSOR1 (B1)	P1272	1272	EC-497
A/F SENSOR1 (B1)	P1273	1273	EC-506
A/F SENSOR1 (B1)	P1274	1274	EC-516
A/F SENSOR1 (B1)	P1276	1276	EC-526
A/F SENSOR1 (B1)	P1278	1278	EC-536
A/F SENSOR1 (B1)	P1279	1279	EC-548
A/F SENSOR1 (B2)	P1281	1281	EC-488
A/F SENSOR1 (B2)	P1282	1282	EC-497
A/F SENSOR1 (B2)	P1283	1283	EC-506
A/F SENSOR1 (B2)	P1284	1284	EC-516
A/F SENSOR1 (B2)	P1286	1286	EC-526
A/F SENSOR1 (B2)	P1288	1288	EC-536
A/F SENSOR1 (B2)	P1289	1289	EC-548
A/F SEN1 HTR (B1)	P1031	1031	EC-405
A/F SEN1 HTR (B1)	P1032	1032	EC-405
A/F SEN1 HTR (B2)	P1051	1051	EC-405
A/F SEN1 HTR (B2)	P1052	1052	EC-405
A/T INTERLOCK	P1730	1730	AT-145
A/T TCC S/V FNCTN	P0744	0744	AT-127
ICC COMMAND VALUE*7	P1568	1568	EC-587
APP SEN 1/CIRC	P2122	2122	EC-619
APP SEN 1/CIRC	P2123	2123	EC-619
APP SEN 2/CIRC	P2127	2127	EC-626
APP SEN 2/CIRC	P2128	2128	EC-626
APP SENSOR	P2138	2138	EC-640
ASCD BRAKE SW*6	P1572	1572	EC-588, EC-597
ASCD SW*6	P1564	1564	EC-574, EC-581
ASCD VHL SPD SEN*6	P1574	1574	EC-605, EC-607
ATF TEMP SEN/CIRC	P0710	0710	AT-136
BRAKE SW/CIRCUIT	P1805	1805	EC-614
CAN COMM CIRCUIT	U1000	1000*4	EC-171
CAN COMM CIRCUIT	U1001	1001*4	EC-171
CKP SEN/CIRCUIT	P0335	0335	EC-300
CLOSED LOOP-B1	P1148	1148	EC-464
CLOSED LOOP-B2	P1168	1168	EC-464
CMP SEN/CIRC-B1	P0340	0340	EC-307
CMP SEN/CIRC-B2	P0345	0345	EC-307

Items (CONSULT-II screen terms)	DTC*1		Reference page
	CONSULT-II GST*2	ECM*3	
CTP LEARNING	P1225	1225	EC-479
CTP LEARNING	P1226	1226	EC-481
CYL 1 MISFIRE	P0301	0301	EC-285
CYL 2 MISFIRE	P0302	0302	EC-285
CYL 3 MISFIRE	P0303	0303	EC-285
CYL 4 MISFIRE	P0304	0304	EC-285
CYL 5 MISFIRE	P0305	0305	EC-285
CYL 6 MISFIRE	P0306	0306	EC-285
D/C SOLENOID/CIRC	P1762	1762	AT-158
D/C SOLENOID FNCTN	P1764	1764	AT-160
ECM	P0605	0605	EC-402
ECM BACK UP/CIRCUIT	P1065	1065	EC-413
ECT SEN/CIRCUIT	P0117	0117	EC-208
ECT SEN/CIRCUIT	P0118	0118	EC-208
ECT SENSOR	P0125	0125	EC-220
ENG OVER TEMP	P1217	1217	EC-467
ENGINE SPEED SIG	P0725	0725	AT-123
ETC ACTR	P1121	1121	EC-424
ETC FUNCTION/CIRC	P1122	1122	EC-426
ETC MOT	P1128	1128	EC-437
ETC MOT PWR	P1124	1124	EC-432
ETC MOT PWR	P1126	1126	EC-432
EVAP GROSS LEAK	P0455	0455	EC-367
EVAP PURG FLOW/MON	P0441	0441	EC-322
EVAP SMALL LEAK	P0442	0442	EC-327
EVAP SYS PRES SEN	P0451	0451	EC-350
EVAP SYS PRES SEN	P0452	0452	EC-353
EVAP SYS PRES SEN	P0453	0453	EC-359
EVAP VERY SML LEAK	P0456	0456	EC-375
FR/B SOLENOID/CIRC	P1757	1757	AT-154
FR/B SOLENOID FNCT	P1759	1759	AT-156
FTT SEN/CIRCUIT	P0182	0182	EC-273
FTT SEN/CIRCUIT	P0183	0183	EC-273
FTT SENSOR	P0181	0181	EC-267
FUEL LEV SEN SLOSH	P0460	0460	EC-385
FUEL LEVEL SENSOR	P0461	0461	EC-387
FUEL LEVL SEN/CIRC	P0462	0462	EC-389
FUEL LEVL SEW/CIRC	P0463	0463	EC-389
FUEL SYS-LEAN-B1	P0171	0171	EC-248
FUEL SYS-LEAN-B2	P0174	0174	EC-248
FUEL SYS-RICH-B1	P0172	0172	EC-258
FUEL SYS-RICH-B2	P0175	0175	EC-258

Items (CONSULT-II screen terms)	DTC*1		Reference page
	CONSULT-II GST*2	ECM*3	
HLR/C SOL FNCTN	P1769	1769	AT-164
HLR/C SOL/CIRC	P1767	1767	AT-162
HO2S2 (B1)	P0138	0138	EC-228
HO2S2 (B1)	P0139	0139	EC-237
HO2S2 (B1)	P1146	1146	EC-442
HO2S2 (B1)	P1147	1147	EC-453
HO2S2 (B2)	P0158	0158	EC-228
HO2S2 (B2)	P0159	0159	EC-237
HO2S2 (B2)	P1166	1166	EC-442
HO2S2 (B2)	P1167	1167	EC-453
HO2S2 HTR (B1)	P0037	0037	EC-178
HO2S2 HTR (B1)	P0038	0038	EC-178
HO2S2 HTR (B2)	P0057	0057	EC-178
HO2S2 HTR (B2)	P0058	0058	EC-178
I/C SOLENOID/CIRC	P1752	1752	AT-150
I/C SOLENOID FNCTN	P1754	1754	AT-152
IAT SEN/CIRCUIT	P0112	0112	EC-203
IAT SEN/CIRCUIT	P0113	0113	EC-203
IAT SENSOR	P0127	0127	EC-223
INT/V TIM CONT-B1	P0011	0011	EC-174
INT/V TIM CONT-B2	P0021	0021	EC-174
INT/V TIM V/CIR-B1	P1111	1111	EC-417
INT/V TIM V/CIR-B2	P1136	1136	EC-417
ISC SYSTEM	P0506	0506	EC-393
ISC SYSTEM	P0507	0507	EC-395
KNOCK SEN/CIRC-B1	P0327	0327	EC-295
KNOCK SEN/CIRC-B1	P0328	0328	EC-295
L/PRESS SOL/CIRC	P0745	0745	AT-129
LC/B SOLENOID FNCT	P1774	1774	AT-168
LC/B SOLENOID/CIRC	P1772	1772	AT-166
MAF SEN/CIRCUIT	P0101	0101	EC-186
MAF SEN/CIRCUIT	P0102	0102	EC-195
MAF SEN/CIRCUIT	P0103	0103	EC-195
MULTI CYL MISFIRE	P0300	0300	EC-285
NATS MALFUNCTION	P1610 - P1615	1610 - 1615	EC-53
NO DTC IS DETECTED. FURTHER TESTING MAY BE REQUIRED.	**P0000**	**0000**	**—**
P-N POS SW/CIRCUIT	P1706	1706	EC-609
PNP SW/CIRC	P0705	0705	AT-114
PURG VOLUME CONT/V	P0444	0444	EC-336
PURG VOLUME CONT/V	P0445	0445	EC-336
PURG VOLUME CONT/V	P1444	1444	EC-560

Items (CONSULT-II screen terms)	DTC*1		Reference page
	CONSULT-II GST*2	ECM*3	
PW ST P SEN/CIRC	P0550	0550	EC-397
SENSOR POWER/CIRC	P1229	1229	EC-483
TCM	P0700	0700	AT-113
TCC SOLENOID/CIRC	P0740	0740	AT-125
TCS C/U FUNCTN	P1211	1211	EC-465
TCS/CIRC	P1212	1212	EC-466
THERMSTAT FNCTN	P0128	0128	EC-226
TP SEN 1/CIRC	P0222	0222	EC-278
TP SEN 1/CIRC	P0223	0223	EC-278
TP SEN 2/CIRC	P0122	0122	EC-213
TP SEN 2/CIRC	P0123	0123	EC-213
TP SEN/CIRC A/T	P1705	1705	AT-133
TP SENSOR	P2135	2135	EC-633
TURBINE REV S/CIRC	P1716	1716	AT-141
TW CATALYST SYS-B1	P0420	0420	EC-316
TW CATALYST SYS-B2	P0430	0430	EC-316
VEH SPD SEN/CIR AT*5	P0720	0720	AT-118
VEH SPEED SEN/CIRC*5	P0500	0500	EC-391
VENT CONTROL VALVE	P0447	0447	EC-343
VENT CONTROL VALVE	P1446	1446	EC-568

*1: 1st trip DTC No. is the same as DTC No.
*2: This number is prescribed by SAE J2012.
*3: In Diagnostic Test Mode II (Self-diagnostic results), this number is controlled by NISSAN.
*4: The troubleshooting for this DTC needs CONSULT-II.
*5: When the fail-safe operations for both self-diagnoses occur, the MIL illuminates.
*6: For models with ICC or ASCD system.
*7: For models with ICC system.

PRECAUTIONS

PFP:00001

Precautions for Supplemental Restraint System (SRS) “AIR BAG” and “SEAT BELT PRE-TENSIONER”

ABS00A2R

The Supplemental Restraint System such as “AIR BAG” and “SEAT BELT PRE-TENSIONER”, used along with a front seat belt, helps to reduce the risk or severity of injury to the driver and front passenger for certain types of collision. This system includes seat belt switch inputs and dual stage front air bag modules. The SRS system uses the seat belt switches to determine the front air bag deployment, and may only deploy one front air bag, depending on the severity of a collision and whether the front occupants are belted or unbelted.
Information necessary to service the system safely is included in the SRS and SB section of this Service Manual.

WARNING:

- **To avoid rendering the SRS inoperative, which could increase the risk of personal injury or death in the event of a collision which would result in air bag inflation, all maintenance must be performed by an authorized NISSAN/INFINITI dealer.**
- **Improper maintenance, including incorrect removal and installation of the SRS, can lead to personal injury caused by unintentional activation of the system. For removal of Spiral Cable and Air Bag Module, see the SRS section.**
- **Do not use electrical test equipment on any circuit related to the SRS unless instructed to in this Service Manual. SRS wiring harnesses can be identified by yellow and/or orange harnesses or harness connectors.**

On Board Diagnostic (OBD) System of Engine and A/T

ABS006JZ

The ECM has an on board diagnostic system. It will light up the malfunction indicator lamp (MIL) to warn the driver of a malfunction causing emission deterioration.

CAUTION:

- **Be sure to turn the ignition switch OFF and disconnect the negative battery cable before any repair or inspection work. The open/short circuit of related switches, sensors, solenoid valves, etc. will cause the MIL to light up.**
- **Be sure to connect and lock the connectors securely after work. A loose (unlocked) connector will cause the MIL to light up due to the open circuit. (Be sure the connector is free from water, grease, dirt, bent terminals, etc.)**
- **Certain systems and components, especially those related to OBD, may use a new style slide-locking type harness connector. For description and how to disconnect, refer to PG-74, "HARNESS CONNECTOR" .**
- **Be sure to route and secure the harnesses properly after work. The interference of the harness with a bracket, etc. may cause the MIL to light up due to the short circuit.**
- **Be sure to connect rubber tubes properly after work. A misconnected or disconnected rubber tube may cause the MIL to light up due to the malfunction of the EVAP system or fuel injection system, etc.**
- **Be sure to erase the unnecessary malfunction information (repairs completed) from the ECM and TCM (Transmission control module) before returning the vehicle to the customer.**

Precaution

ABS006K0

- **Always use a 12 volt battery as power source.**
- **Do not attempt to disconnect battery cables while engine is running.**
- **Before connecting or disconnecting the ECM harness connector, turn ignition switch OFF and disconnect negative battery cable. Failure to do so may damage the ECM because battery voltage is applied to ECM even if ignition switch is turned OFF.**
- **Before removing parts, turn ignition switch OFF and then disconnect negative battery cable.**

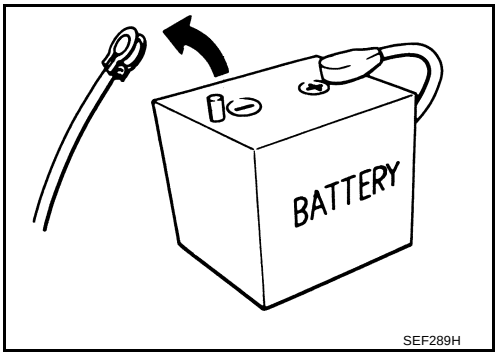

SEF289H

- **Do not disassemble ECM.**
- **If a battery cable is disconnected, the memory will return to the ECM value.**
  The ECM will now start to self-control at its initial value. Engine operation can vary slightly when the terminal is disconnected. However, this is not an indication of a malfunction. Do not replace parts because of a slight variation.

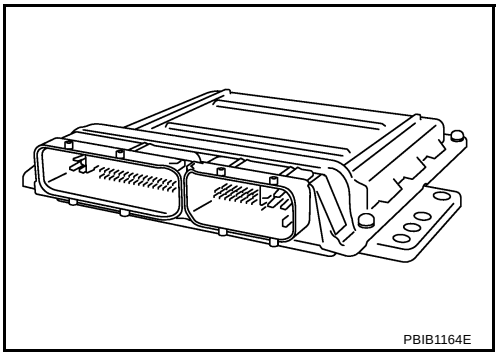

- **If the battery is disconnected, the following emission-related diagnostic information will be lost within 24 hours.**
  - **Diagnostic trouble codes**
  - **1st trip diagnostic trouble codes**
  - **Freeze frame data**
  - **1st trip freeze frame data**
  - **System readiness test (SRT) codes**
  - **Test values**
- **When connecting ECM harness connector, fasten it securely with a lever as far as it will go as shown in the figure.**

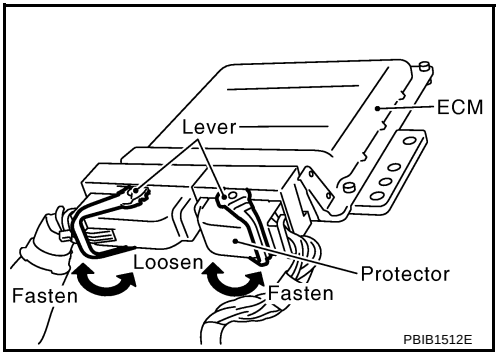

- **When connecting or disconnecting pin connectors into or from ECM, take care not to damage pin terminals (bend or break).**
  Make sure that there are not any bends or breaks on ECM pin terminal, when connecting pin connectors.
- **Securely connect ECM harness connectors.**
  A poor connection can cause an extremely high (surge) voltage to develop in coil and condenser, thus resulting in damage to ICs.
- **Keep engine control system harness at least 10 cm (4 in) away from adjacent harness, to prevent engine control system malfunctions due to receiving external noise, degraded operation of ICs, etc.**
- **Keep engine control system parts and harness dry.**

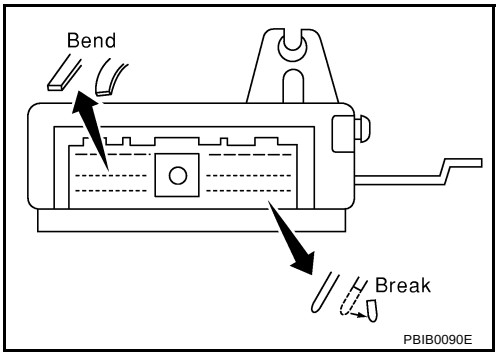

- **Before replacing ECM, perform "ECM Terminals and Reference Value" inspection and make sure ECM functions properly. Refer to EC-123 .**
- **Handle mass air flow sensor carefully to avoid damage.**
- **Do not disassemble mass air flow sensor.**
- **Do not clean mass air flow sensor with any type of detergent.**
- **Do not disassemble electric throttle control actuator.**
- **Even a slight leak in the air intake system can cause serious incidents.**
- **Do not shock or jar the camshaft position sensor (PHASE), crankshaft position sensor (POS).**
- **After performing each TROUBLE DIAGNOSIS, perform DTC Confirmation Procedure or Overall Function Check.**
  The DTC should not be displayed in the DTC Confirmation Procedure if the repair is completed. The Overall Function Check should be a good result if the repair is completed.

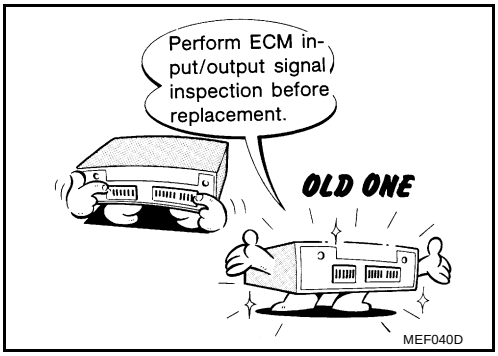

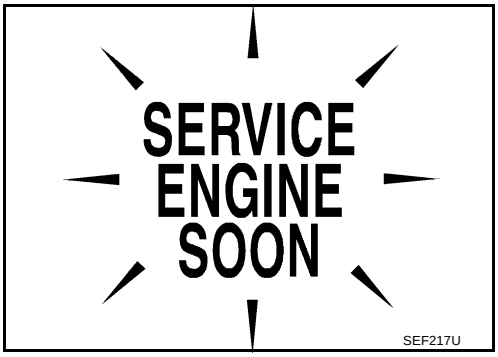

- **When measuring ECM signals with a circuit tester, never allow the two tester probes to contact.**
  Accidental contact of probes will cause a short circuit and damage the ECM power transistor.
- **Do not use ECM ground terminals when measuring input/output voltage. Doing so may result in damage to the ECM's transistor. Use a ground other than ECM terminals, such as the ground.**

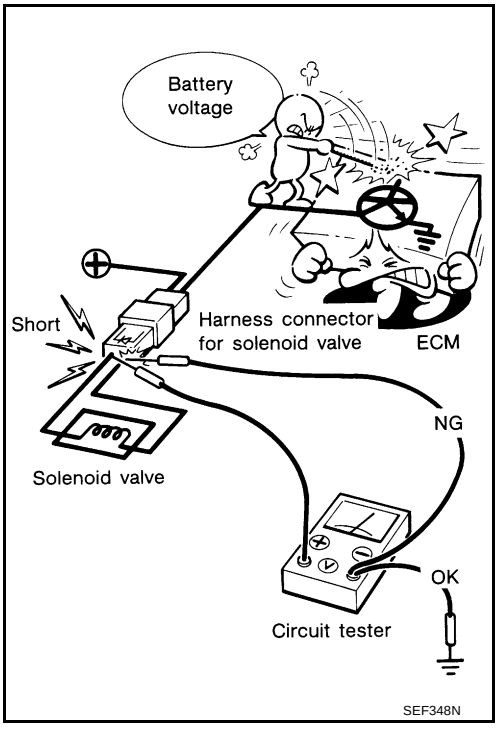

- **B1 indicates the bank 1, B2 indicates the bank 2 as shown in the figure.**

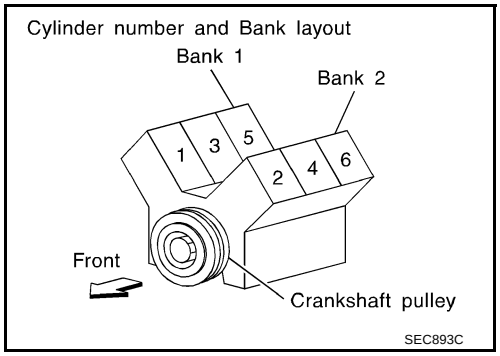

- **Do not operate fuel pump when there is no fuel in lines.**
- **Tighten fuel hose clamps to the specified torque.**

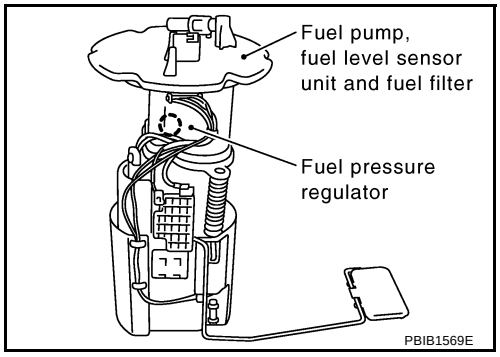

- **Do not depress accelerator pedal when starting.**
- **Immediately after starting, do not rev up engine unnecessarily.**
- **Do not rev up engine just prior to shutdown.**

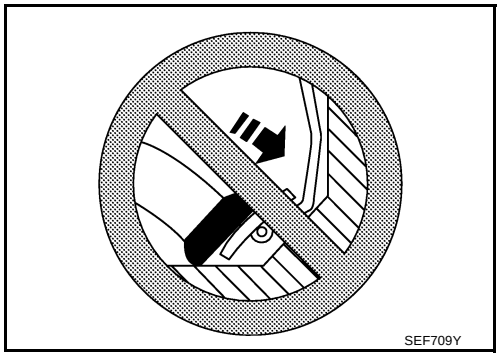

- **When installing C.B. ham radio or a mobile phone, be sure to observe the following as it may adversely affect electronic control systems depending on installation location.**
  - **Keep the antenna as far as possible from the electronic control units.**
  - **Keep the antenna feeder line more than 20 cm (8 in) away from the harness of electronic controls.**
    Do not let them run parallel for a long distance.
  - **Adjust the antenna and feeder line so that the standing-wave radio can be kept smaller.**
  - **Be sure to ground the radio to vehicle body.**

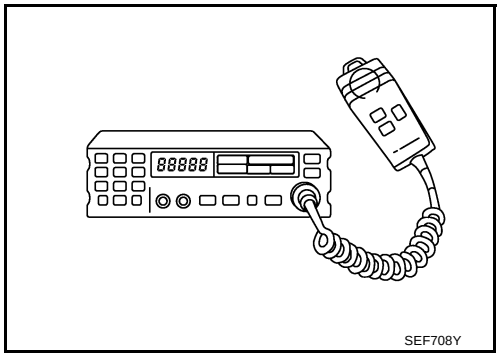

PREPARATION

PFP:00002

Special Service Tools

ABS006K2

The actual shapes of Kent-Moore tools may differ from those of special service tools illustrated here.

Tool number (Kent-Moore No.) Tool name		Description
EG17650301 (J-33984-A) Radiator cap tester adapter	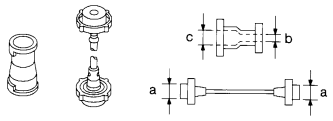 S-NT564	Adapting radiator cap tester to radiator cap and radiator filler neck **a: 28 (1.10) dia.** **b: 31.4 (1.236) dia.** **c: 41.3 (1.626) dia.** Unit: mm (in)
KV10117100 (J-36471-A) Heated oxygen sensor wrench	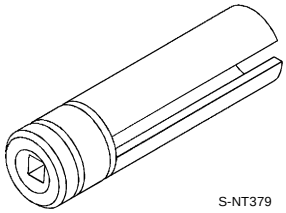 S-NT379	Loosening or tightening heated oxygen sensor with 22 mm (0.87 in) hexagon nut
KV10114400 (J-38365) Heated oxygen sensor wrench	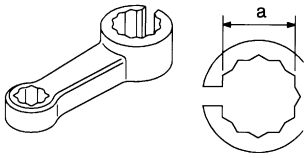 S-NT636	Loosening or tightening air fuel ratio (A/F) sensor **a: 22 mm (0.87 in)**
(J-44321) Fuel pressure gauge kit	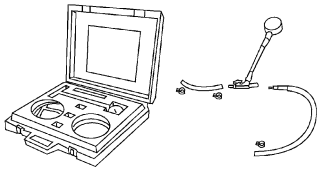 LEC642	Checking fuel pressure
(J-44321-6) Fuel pressure adapter	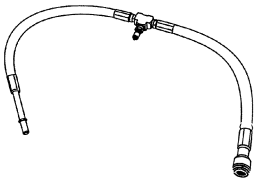 LBIA0376E	Connecting fuel pressure gauge to quick connector type fuel lines.
(J-44626) Air fuel ratio (A/F) sensor wrench	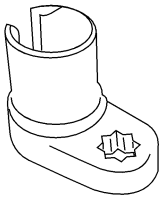 LEM054	Loosening or tightening air fuel ratio (A/F) sensor 1
(J-45488) Quick connector release	 PBIC0198E	Remove fuel tube quick connectors in engine room.

Tool number (Kent-Moore No.) Tool name	Description
KV109E0010 (J-46209) Break-out box 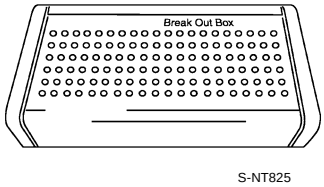 S-NT825	Measuring ECM signals with a circuit tester
KV109E0080 (J-45819) Y-cable adapter 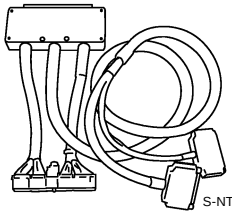 S-NT826	Measuring ECM signals with a circuit tester

Commercial Service Tools

ABS006K3

Tool name (Kent-Moore No.)		Description
Leak detector i.e.: (J-41416)	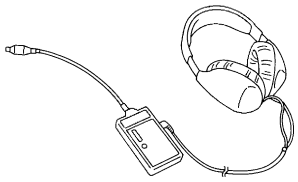 S-NT703	Locating EVAP leak
EVAP service port adapter i.e.: (J-41413-OBD)	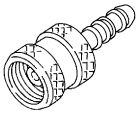 S-NT704	Applying positive pressure through EVAP service port
Fuel filler cap adapter i.e.: (MLR-8382)	 S-NT815	Checking fuel tank vacuum relief valve opening pressure
Socket wrench	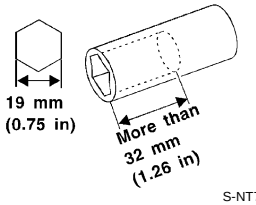 \\> S-NT705	Removing and installing engine coolant temperature sensor
Oxygen sensor thread cleaner i.e.: (J-43897-18) (J-43897-12)	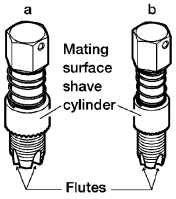 \\> AEM488	Reconditioning the exhaust system threads before installing a new oxygen sensor. Use with anti-seize lubricant shown below. **a: 18 mm diameter with pitch 1.5 mm for Zirconia Oxygen Sensor** **b: 12 mm diameter with pitch 1.25 mm for Titania Oxygen Sensor**
Anti-seize lubricant i.e.: (Permatex™ 133AR or equivalent meeting MIL specification MIL-A-907)	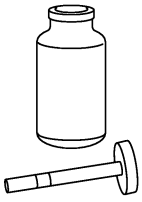 S-NT779	Lubricating oxygen sensor thread cleaning tool when reconditioning exhaust system threads.

ENGINE CONTROL SYSTEM

PFP:23710

System Diagram

ABS006K4

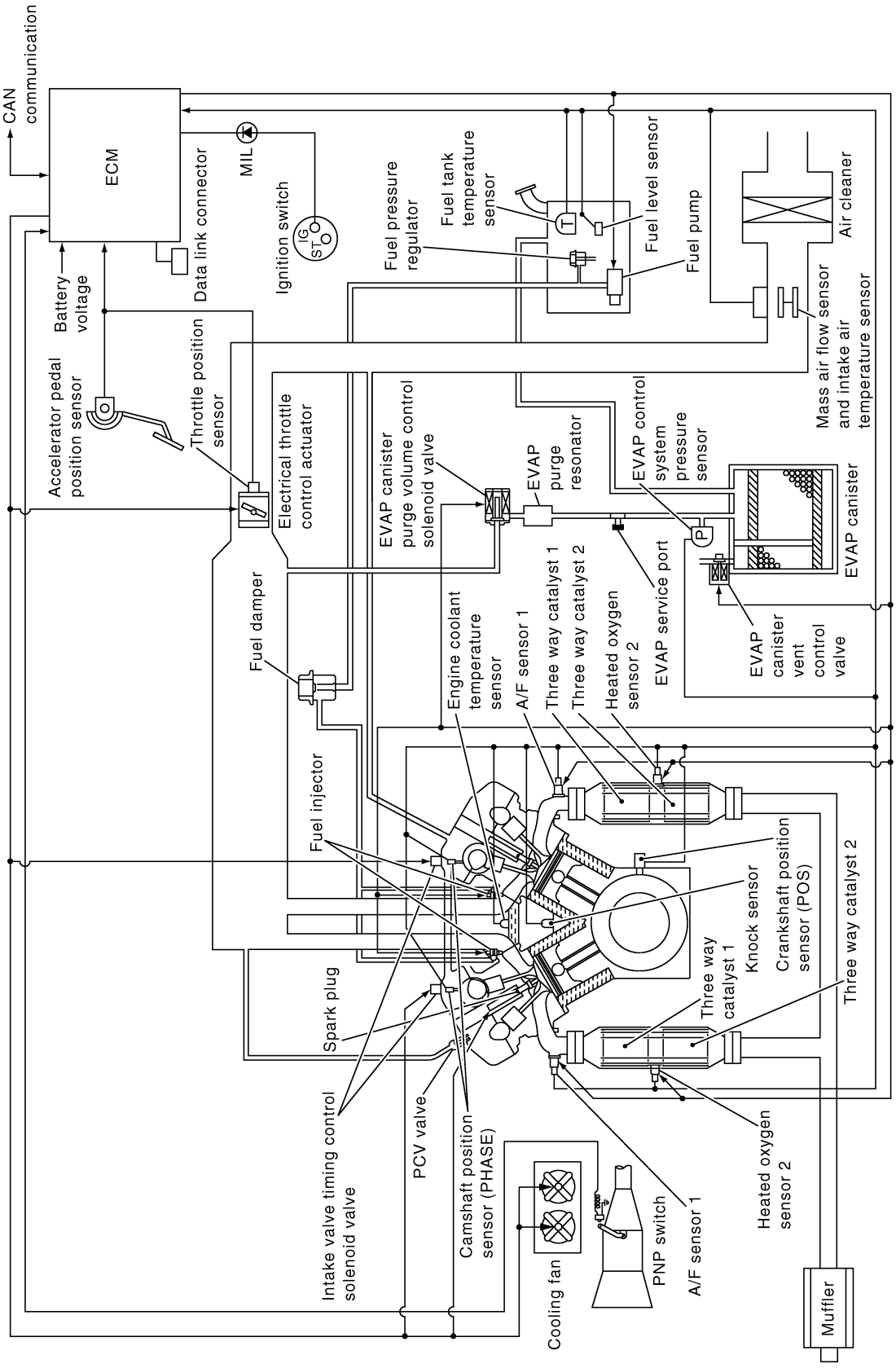

PBIB2281E

Multiport Fuel Injection (MFI) System

ABS006K7

INPUT/OUTPUT SIGNAL CHART

Sensor	Input Signal to ECM	ECM function	Actuator
Crankshaft position sensor (POS)	Engine speed*3 Piston position	Fuel injection & mixture ratio control	Fuel injector
Camshaft position sensor (PHASE)			
Mass air flow sensor	Amount of intake air		
Engine coolant temperature sensor	Engine coolant temperature		
Air fuel ratio (A/F) sensor 1	Density of oxygen in exhaust gas		
Throttle position sensor	Throttle position		
Accelerator pedal position sensor	Accelerator pedal position		
Park/neutral position (PNP) switch	Gear position		
Knock sensor	Engine knocking condition		
Battery	Battery voltage*3		
Power steering pressure sensor	Power steering operation		
Heated oxygen sensor 2*1	Density of oxygen in exhaust gas		
Air conditioner switch*2	Air conditioner operation		
Wheel sensor*2	Vehicle speed		

*1: This sensor is not used to control the engine system under normal conditions.
*2: This signal is sent to the ECM through CAN communication line.
*3: ECM determines the start signal status by the signals of engine speed and battery voltage.

SYSTEM DESCRIPTION

The amount of fuel injected from the fuel injector is determined by the ECM. The ECM controls the length of time the valve remains open (injection pulse duration). The amount of fuel injected is a program value in the ECM memory. The program value is preset by engine operating conditions. These conditions are determined by input signals (for engine speed and intake air) from both the crankshaft position sensor and the mass air flow sensor.

VARIOUS FUEL INJECTION INCREASE/DECREASE COMPENSATION

In addition, the amount of fuel injected is compensated to improve engine performance under various operating conditions as listed below.

<Fuel increase>

- During warm-up
- When starting the engine
- During acceleration
- Hot-engine operation
- When selector lever is changed from N to D
- High-load, high-speed operation

<Fuel decrease>

- During deceleration
- During high engine speed operation

MIXTURE RATIO FEEDBACK CONTROL (CLOSED LOOP CONTROL)

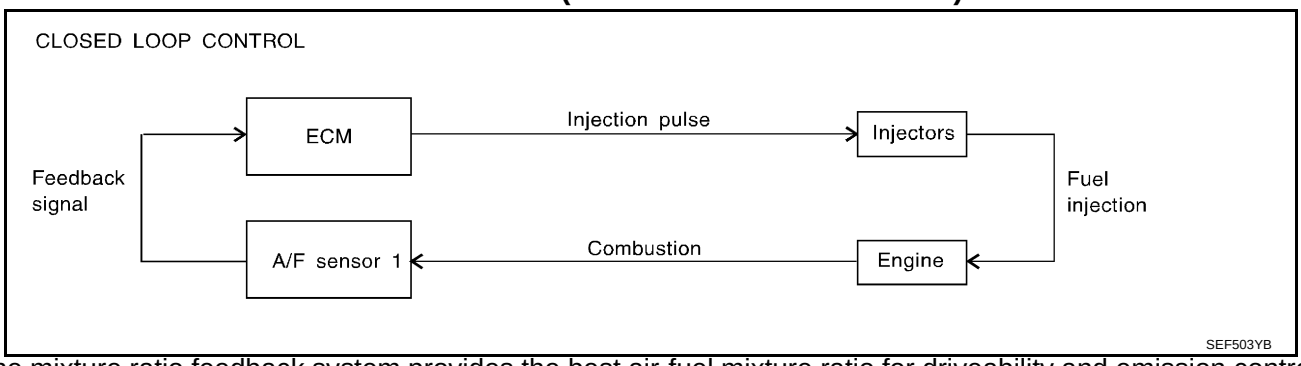

The mixture ratio feedback system provides the best air-fuel mixture ratio for driveability and emission control. The three way catalyst 1 can then better reduce CO, HC and NOx emissions. This system uses air fuel ratio (A/F) sensor 1 in the exhaust manifold to monitor whether the engine operation is rich or lean. The ECM adjusts the injection pulse width according to the sensor voltage signal. For more information about air fuel ratio (A/F) sensor 1, refer to EC-488 . This maintains the mixture ratio within the range of stoichiometric (ideal air-fuel mixture).
This stage is referred to as the closed loop control condition.
Heated oxygen sensor 2 is located downstream of the three way catalyst 1. Even if the switching characteristics of air fuel ratio (A/F) sensor 1 shift, the air-fuel ratio is controlled to stoichiometric by the signal from heated oxygen sensor 2.

Open Loop Control

The open loop system condition refers to when the ECM detects any of the following conditions. Feedback control stops in order to maintain stabilized fuel combustion.

- Deceleration and acceleration
- High-load, high-speed operation
- Malfunction of air fuel ratio (A/F) sensor 1 or its circuit
- Insufficient activation of air fuel ratio (A/F) sensor 1 at low engine coolant temperature
- High engine coolant temperature
- During warm-up
- After shifting from N to D
- When starting the engine

MIXTURE RATIO SELF-LEARNING CONTROL

The mixture ratio feedback control system monitors the mixture ratio signal transmitted from air fuel ratio (A/F) sensor 1. This feedback signal is then sent to the ECM. The ECM controls the basic mixture ratio as close to the theoretical mixture ratio as possible. However, the basic mixture ratio is not necessarily controlled as originally designed. Both manufacturing differences (i.e., mass air flow sensor hot wire) and characteristic changes during operation (i.e., injector clogging) directly affect mixture ratio.
Accordingly, the difference between the basic and theoretical mixture ratios is monitored in this system. This is then computed in terms of “injection pulse duration” to automatically compensate for the difference between the two ratios.
“Fuel trim” refers to the feedback compensation value compared against the basic injection duration. Fuel trim includes short term fuel trim and long term fuel trim.
“Short term fuel trim” is the short-term fuel compensation used to maintain the mixture ratio at its theoretical value. The signal from air fuel ratio (A/F) sensor 1 indicates whether the mixture ratio is RICH or LEAN compared to the theoretical value. The signal then triggers a reduction in fuel volume if the mixture ratio is rich, and an increase in fuel volume if it is lean.
“Long term fuel trim” is overall fuel compensation carried out long-term to compensate for continual deviation of the short term fuel trim from the central value. Such deviation will occur due to individual engine differences, wear over time and changes in the usage environment.

FUEL INJECTION TIMING

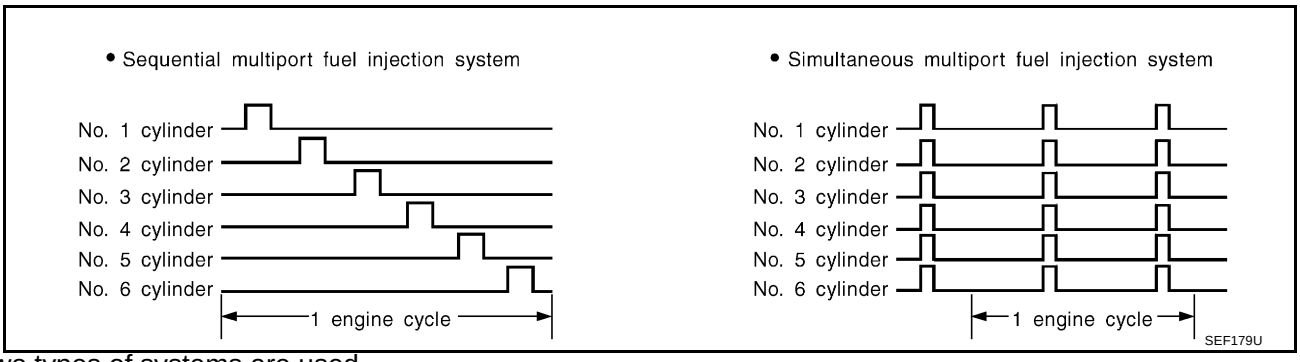

Two types of systems are used.

Sequential Multiport Fuel Injection System

Fuel is injected into each cylinder during each engine cycle according to the firing order. This system is used when the engine is running.

Simultaneous Multiport Fuel Injection System

Fuel is injected simultaneously into all six cylinders twice each engine cycle. In other words, pulse signals of the same width are simultaneously transmitted from the ECM.
The six injectors will then receive the signals two times for each engine cycle.
This system is used when the engine is being started and/or if the fail-safe system (CPU) is operating.

FUEL SHUT-OFF

Fuel to each cylinder is cut off during deceleration, operation of the engine at excessively high speeds or operation of the vehicle at excessively high speeds.

Electronic Ignition (EI) System

ABS006K8

INPUT/OUTPUT SIGNAL CHART

Sensor	Input Signal to ECM	ECM function	Actuator
Crankshaft position sensor (POS)	Engine speed*2 Piston position	Ignition timing control	Power transistor
Camshaft position sensor (PHASE)			
Mass air flow sensor	Amount of intake air		
Engine coolant temperature sensor	Engine coolant temperature		
Throttle position sensor	Throttle position		
Accelerator pedal position sensor	Accelerator pedal position		
Knock sensor	Engine knocking		
Park/neutral position (PNP) switch	Gear position		
Battery	Battery voltage*2		
Wheel sensor*1	Vehicle speed		

*1: This signal is sent to the ECM through CAN communication line.
*2: ECM determines the start signal status by the signals of engine speed and battery voltage.

SYSTEM DESCRIPTION

Firing order: 1 - 2 - 3 - 4 - 5 - 6
The ignition timing is controlled by the ECM to maintain the best air-fuel ratio for every running condition of the engine. The ignition timing data is stored in the ECM.
The ECM receives information such as the injection pulse width and camshaft position sensor (PHASE) signal. Computing this information, ignition signals are transmitted to the power transistor.
During the following conditions, the ignition timing is revised by the ECM according to the other data stored in the ECM.

- At starting
- During warm-up
- At idle
- At low battery voltage

- During acceleration

The knock sensor retard system is designed only for emergencies. The basic ignition timing is programmed within the anti-knocking zone, if recommended fuel is used under dry conditions. The retard system does not operate under normal driving conditions. If engine knocking occurs, the knock sensor monitors the condition. The signal is transmitted to the ECM. The ECM retards the ignition timing to eliminate the knocking condition.

Fuel Cut Control (at No Load and High Engine Speed)

ABS006KA

INPUT/OUTPUT SIGNAL CHART

Sensor	Input Signal to ECM	ECM function	Actuator
Park/neutral position (PNP) switch	Neutral position	Fuel cut control	Fuel injector
Accelerator pedal position sensor	Accelerator pedal position		
Engine coolant temperature sensor	Engine coolant temperature		
Crankshaft position sensor (POS) Camshaft position sensor (PHASE)	Engine speed		
Wheel sensor*	Vehicle speed		

*: This signal is sent to the ECM through CAN communication line.

SYSTEM DESCRIPTION

If the engine speed is above 1,800 rpm under no load (for example, the shift position is neutral and engine speed is over 1,800 rpm) fuel will be cut off after some time. The exact time when the fuel is cut off varies based on engine speed.
Fuel cut will be operated until the engine speed reaches 1,500 rpm, then fuel cut will be cancelled.

NOTE:
This function is different from deceleration control listed under EC-31, "Multiport Fuel Injection (MFI) System" .

AIR CONDITIONING CUT CONTROL

PFP:23710

Input/Output Signal Chart

ABS00E8X

Sensor	Input Signal to ECM	ECM function	Actuator
Air conditioner switch*1	Air conditioner ON signal	Air conditioner cut control	Air conditioner relay
Accelerator pedal position sensor	Accelerator pedal position		
Crankshaft position sensor (POS) Camshaft position sensor (PHASE)	Engine speed*2		
Engine coolant temperature sensor	Engine coolant temperature		
Battery	Battery voltage*2		
Refrigerant pressure sensor	Refrigerant pressure		
Power steering pressure sensor	Power steering operation		
Wheel sensor*1	Vehicle speed		

*1: This signal is sent to the ECM through CAN communication line.
*2: ECM determines the start signal status by the signals of engine speed and battery voltage.

System Description

ABS00E8Y

This system improves engine operation when the air conditioner is used.
Under the following conditions, the air conditioner is turned OFF.

- When the accelerator pedal is fully depressed.
- When cranking the engine.
- At high engine speeds.
- When the engine coolant temperature becomes excessively high.
- When operating power steering during low engine speed or low vehicle speed.
- When engine speed is excessively low.
- When refrigerant pressure is excessively low or high.

AUTOMATIC SPEED CONTROL DEVICE (ASCD)

PFP:18930

System Description

ABS006ZG

INPUT/OUTPUT SIGNAL CHART

Sensor	Input signal to ECM	ECM function	Actuator
ASCD brake switch	Brake pedal operation	ASCD vehicle speed control	Electric throttle control actuator
Stop lamp switch	Brake pedal operation		
ASCD steering switch	ASCD steering switch operation		
Park/Neutral position (PNP) switch	Gear position		
Unified meter and A/C amp.*	Vehicle speed		
TCM*	Powertrain revolution		

*: This signal is sent to the ECM through CAN communication line.

BASIC ASCD SYSTEM

Refer to Owner's Manual for ASCD operating instructions.
Automatic Speed Control Device (ASCD) allows a driver to keep vehicle at predetermined constant speed without depressing accelerator pedal. Driver can set vehicle speed in advance between approximately 40 km/h (25 MPH) and 144 km/h (89 MPH).
ECM controls throttle angle of electric throttle control actuator to regulate engine speed.
Operation status of ASCD is indicated by CRUISE indicator and SET indicator in combination meter. If any malfunction occurs in ASCD system, it automatically deactivates control.

SET OPERATION

Press MAIN switch. (The CRUISE indicator in combination meter illuminates.)
When vehicle speed reaches a desired speed between approximately 40 km/h (25 MPH) and 144 km/h (89 MPH), press SET/COAST switch. (Then SET indicator in combination meter illuminates.)

ACCEL OPERATION

If the RESUME/ACCELERATE switch is pressed during cruise control driving, increase the vehicle speed until the switch is released or vehicle speed reaches maximum speed controlled by the system.
And then ASCD will keep the new set speed.

CANCEL OPERATION

When any of following conditions exist, cruise operation will be canceled.

- CANCEL switch is pressed
- More than 2 switches at ASCD steering switch are pressed at the same time (Set speed will be cleared)
- Brake pedal is depressed
- Selector lever is changed to N, P, R position
- Vehicle speed decreased to 13 km/h (8 MPH) lower than the set speed
- VDC/TCS system is operated

When the ECM detects any of the following conditions, the ECM will cancel the cruise operation and inform the driver by blinking indicator lamp.

- Engine coolant temperature is slightly higher than the normal operating temperature, CRUISE lamp may blink slowly.
  When the engine coolant temperature decreases to the normal operating temperature, CRUISE lamp will stop blinking and the cruise operation will be able to work by depressing SET/COAST switch or RESUME/ACCELERATE switch.
- Malfunction for some self-diagnoses regarding ASCD control: SET lamp will blink quickly.

If MAIN switch is turned to OFF during ASCD is activated, all of ASCD operations will be canceled and vehicle speed memory will be erased.

COAST OPERATION

When the SET/COAST switch is pressed during cruise control driving, decrease vehicle set speed until the switch is released. And then ASCD will keep the new set speed.

RESUME OPERATION

When the RESUME/ACCELERATE switch is pressed after cancel operation other than depressing MAIN switch is performed, vehicle speed will return to last set speed. To resume vehicle set speed, vehicle condition must meet following conditions.

- Brake pedal is released
- Selector lever is in other than P and N positions
- Vehicle speed is greater than 40 km/h (25 MPH) and less than 144 km/h (89 MPH)

Component Description

ABS006ZH

ASCD STEERING SWITCH

Refer to EC-581 .

ASCD BRAKE SWITCH

Refer to EC-597 and EC-688 .

STOP LAMP SWITCH

Refer to EC-597 , EC-614 and EC-688 .

ELECTRIC THROTTLE CONTROL ACTUATOR

Refer to EC-424 , EC-426 , EC-432 and EC-437 .

ASCD INDICATOR

Refer to EC-695 .

CAN COMMUNICATION

PFP:23710

System Description

ABS00E8Z

CAN (Controller Area Network) is a serial communication line for real time application. It is an on-vehicle multiplex communication line with high data communication speed and excellent error detection ability. Many electronic control units are equipped onto a vehicle, and each control unit shares information and links with other control units during operation (not independent). In CAN communication, control units are connected with 2 communication lines (CAN H line, CAN L line) allowing a high rate of information transmission with less wiring. Each control unit transmits/receives data but selectively reads required data only.
Refer to LAN-30, "CAN COMMUNICATION" , about CAN communication for detail.

EVAPORATIVE EMISSION SYSTEM

PFP:14950

Description

ABS006Z7

SYSTEM DESCRIPTION

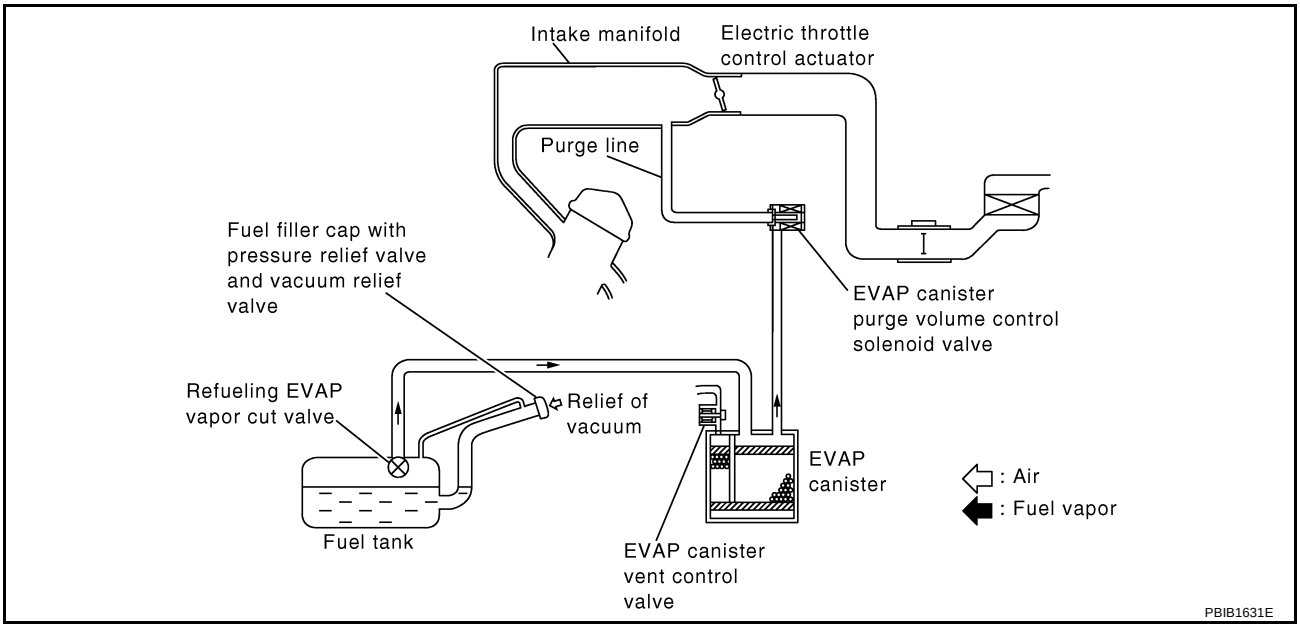

The evaporative emission system is used to reduce hydrocarbons emitted into the atmosphere from the fuel system. This reduction of hydrocarbons is accomplished by activated charcoals in the EVAP canister.
The fuel vapor in the sealed fuel tank is led into the EVAP canister which contains activated carbon and the vapor is stored there when the engine is not operating or when refueling to the fuel tank.
The vapor in the EVAP canister is purged by the air through the purge line to the intake manifold when the engine is operating. EVAP canister purge volume control solenoid valve is controlled by ECM. When the engine operates, the flow rate of vapor controlled by EVAP canister purge volume control solenoid valve is proportionally regulated as the air flow increases.
EVAP canister purge volume control solenoid valve also shuts off the vapor purge line during decelerating and idling.

EVAPORATIVE EMISSION LINE DRAWING

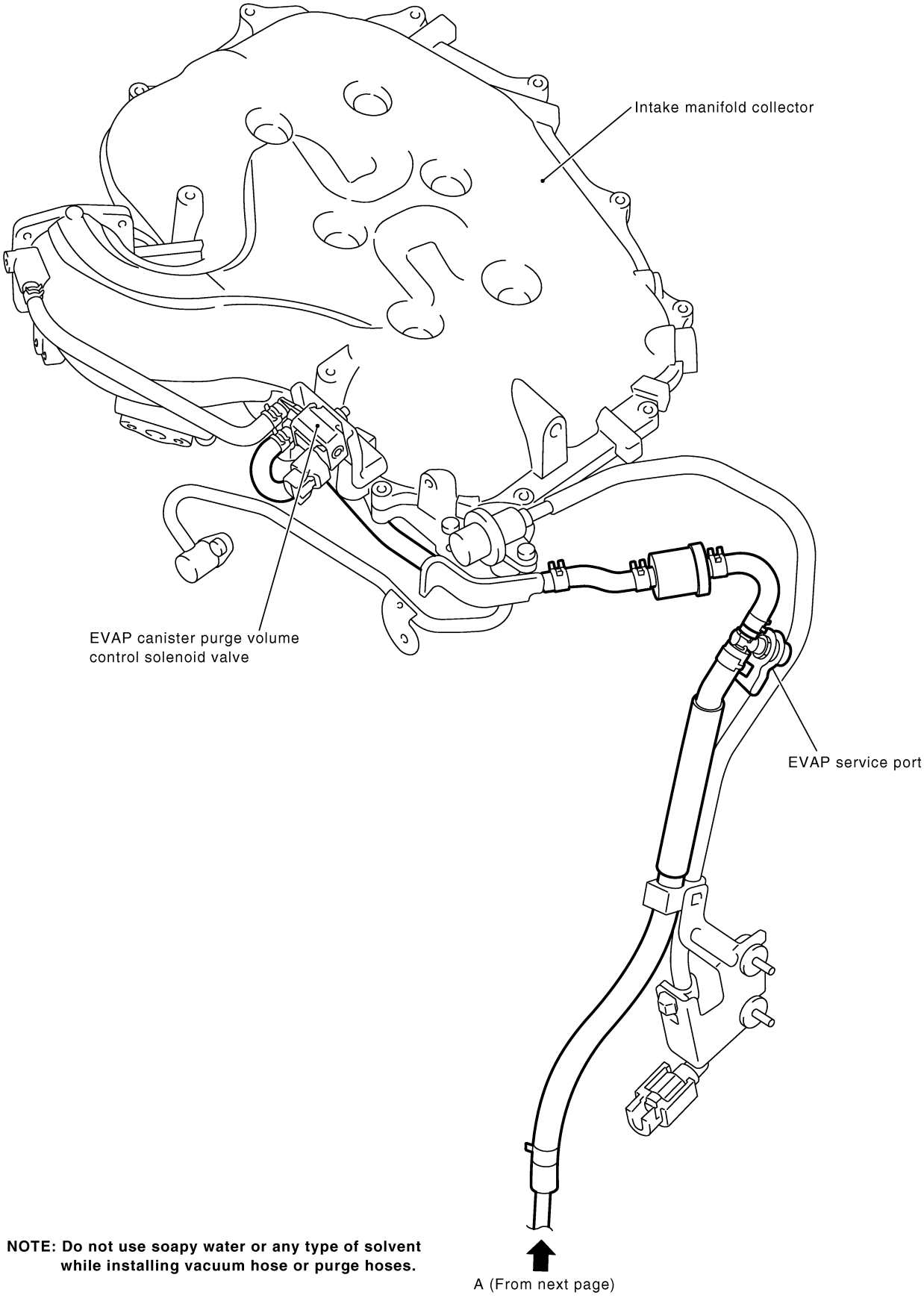

NOTE: Do not use soapy water or any type of solvent while installing vacuum hose or purge hoses.

With undercover removed

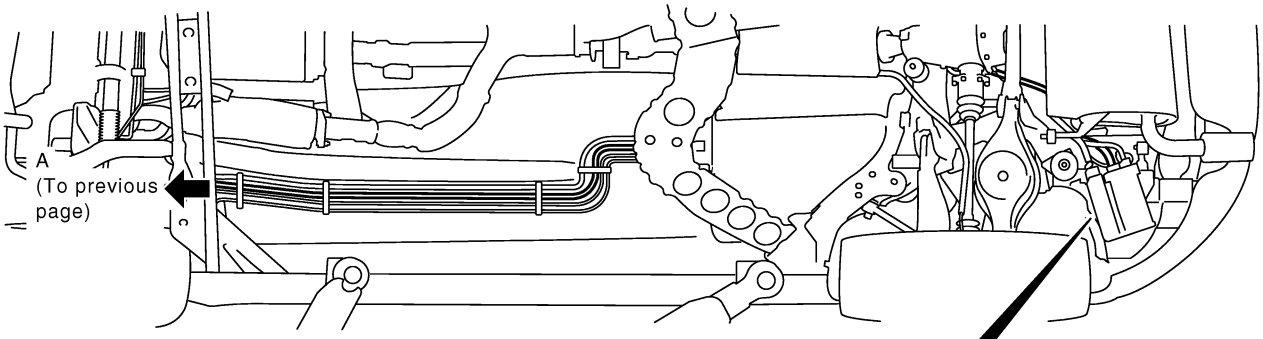

View from under the vehicle
With undercover removed

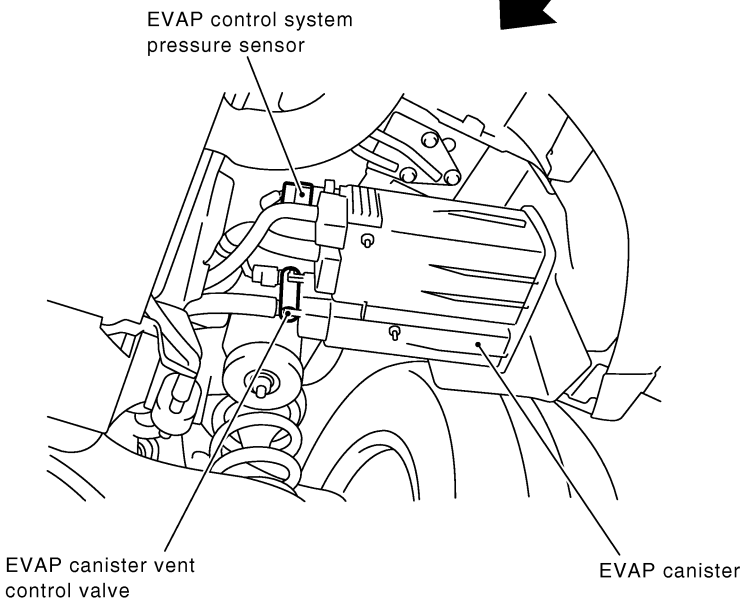

PBIB2295E

Component Inspection

ABS006Z8

EVAP CANISTER

Check EVAP canister as follows:

1. Block port **B** .
2. Blow air into port **A** and check that it flows freely out of port **C** .
3. Release blocked port **B** .
4. Apply vacuum pressure to port **B** and check that vacuum pressure exists at the ports **A** and **C** .
5. Block port **A** and **B** .
6. Apply pressure to port **C** and check that there is no leakage.

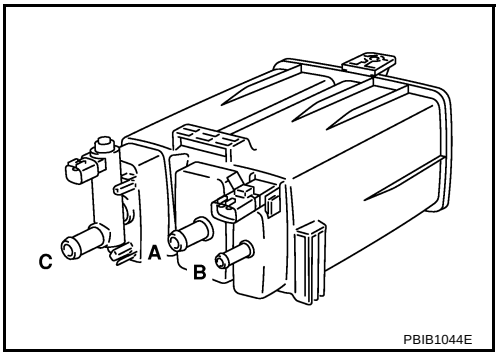

FUEL TANK VACUUM RELIEF VALVE (BUILT INTO FUEL FULLER CAP)

1. Wipe clean valve housing.

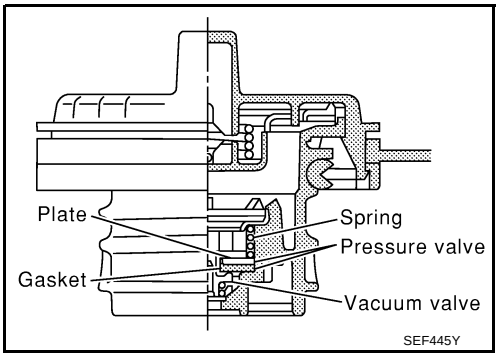

2. Check valve opening pressure and vacuum.

Pressure: **15.3 - 20.0 kPa (0.156 - 0.204 kg/cm^2 , 2.22 - 2.90 psi)**

Vacuum: **–6.0 to –3.3 kPa (–0.061 to –0.034 kg/cm^2 , –0.87 to –0.48 psi)**

3. If out of specification, replace fuel filler cap as an assembly.

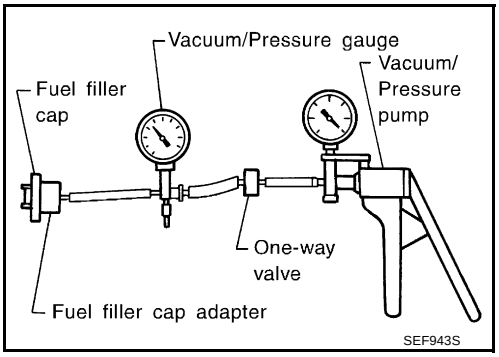

CAUTION:

Use only a genuine fuel filler cap as a replacement. If an incorrect fuel filler cap is used, the MIL may come on.

EVAP CANISTER PURGE VOLUME CONTROL SOLENOID VALVE

Refer to EC-341 .

FUEL TANK TEMPERATURE SENSOR

Refer to EC-271 .

EVAP CANISTER VENT CONTROL VALVE

Refer to EC-348 .

EVAP CONTROL SYSTEM PRESSURE SENSOR

Refer to EC-358 .

EVAP SERVICE PORT

Positive pressure is delivered to the EVAP system through the EVAP service port. If fuel vapor leakage in the EVAP system occurs, use a leak detector to locate the leak.

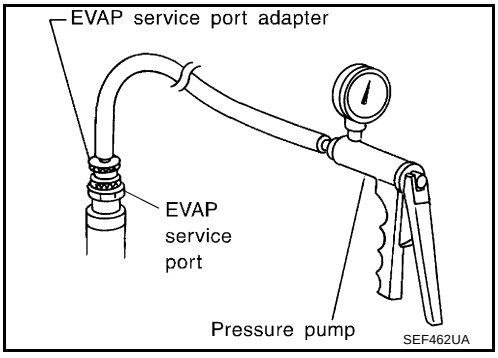

Removal and Installation

ABS006Z9

EVAP CANISTER

Tighten EVAP canister as shown in the figure.

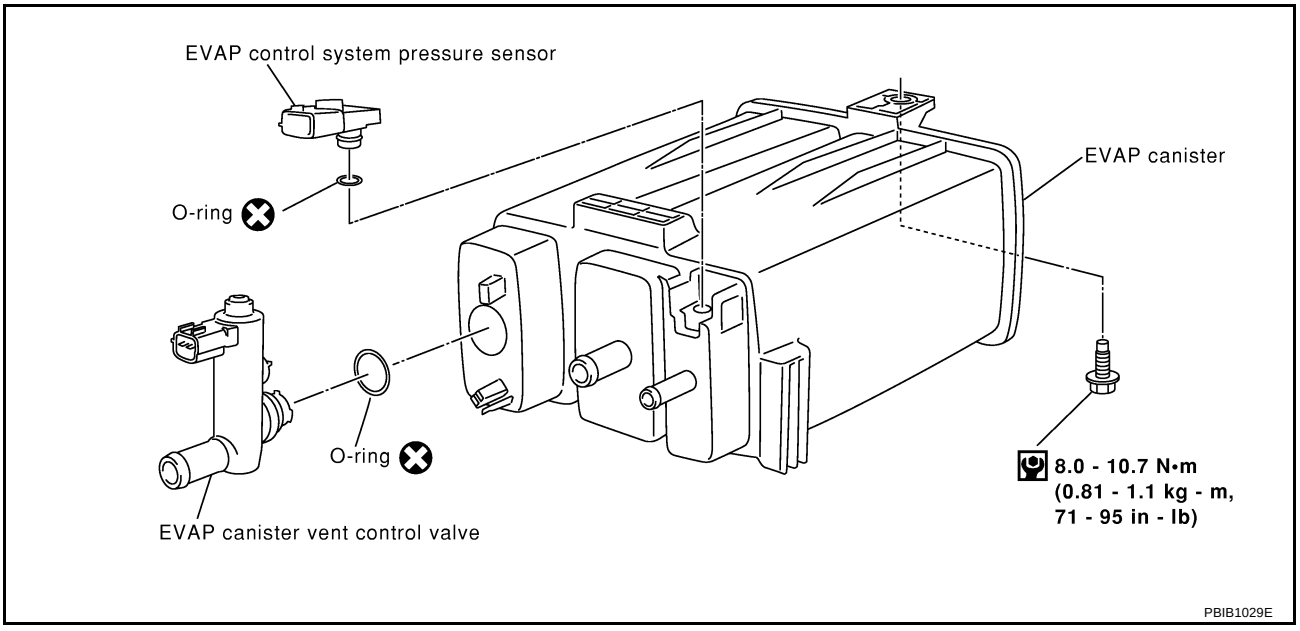

EVAP CANISTER VENT CONTROL VALVE

1. Turn EVAP canister vent control valve counterclockwise.
2. Remove the EVAP canister vent control valve.

Always replace O-ring with a new one.

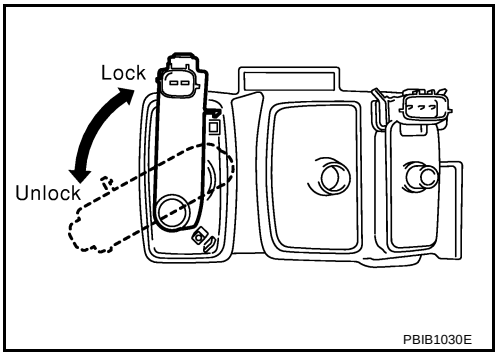

How to Detect Fuel Vapor Leakage

ABS006ZA

CAUTION:

- **Never use compressed air or a high pressure pump.**
- **Do not exceed 4.12 kPa (0.042 kg/cm^2 , 0.6 psi) of pressure in EVAP system.**

NOTE:

- Do not start engine.
- Improper installation of EVAP service port adapter to the EVAP service port may cause a leak.

WITH CONSULT-II

1. Attach the EVAP service port adapter securely to the EVAP service port.
2. Also attach the pressure pump and hose to the EVAP service port adapter.
3. Turn ignition switch ON.
4. Select the “EVAP SYSTEM CLOSE” of “WORK SUPPORT MODE” with CONSULT-II.
5. Touch “START”. A bar graph (Pressure indicating display) will appear on the screen.

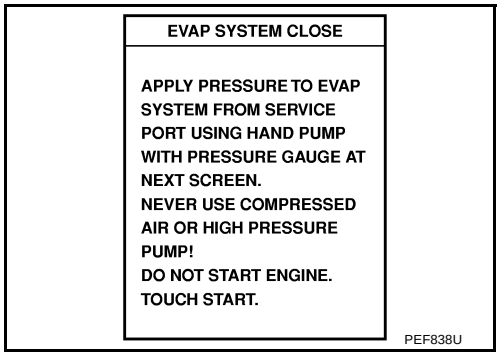

6. Apply positive pressure to the EVAP system until the pressure indicator reaches the middle of the bar graph.
7. Remove EVAP service port adapter and hose with pressure pump.

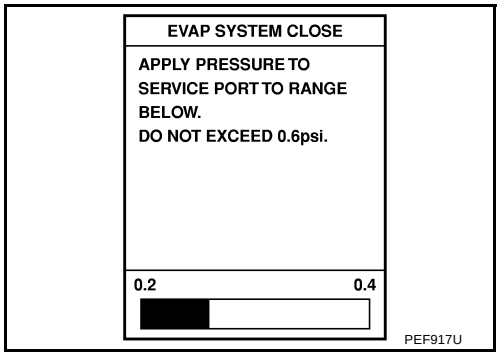

8. Locate the leak using a leak detector. Refer to EC-40, "EVAPORATIVE EMISSION LINE DRAWING" .

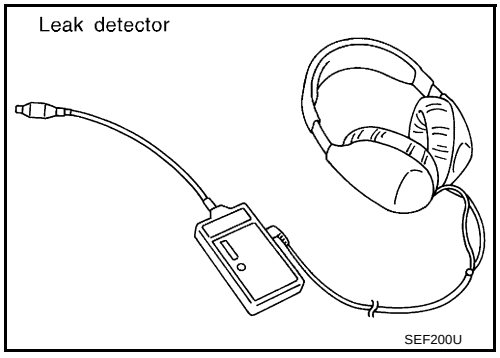

WITHOUT CONSULT-II

1. Attach the EVAP service port adapter securely to the EVAP service port.
2. Also attach the pressure pump with pressure gauge to the EVAP service port adapter.

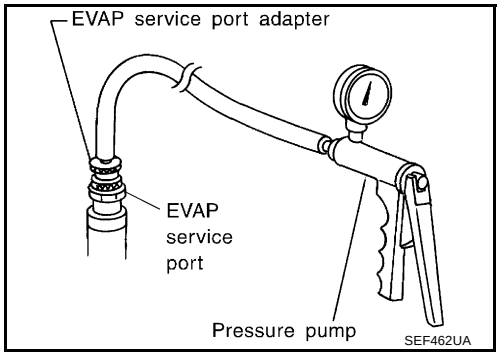

3. Apply battery voltage between the terminals of EVAP canister vent control valve to make a closed EVAP system.

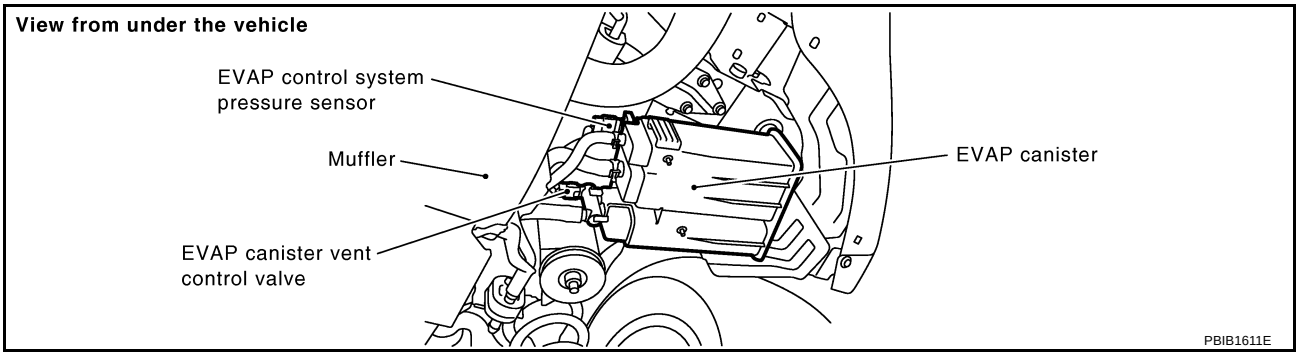

4. To locate the leak, deliver positive pressure to the EVAP system until pressure gauge points reach 1.38 to 2.76 kPa (0.014 to 0.028 kg/cm^2 , 0.2 to 0.4 psi).
5. Remove EVAP service port adapter and hose with pressure pump.
6. Locate the leak using a leak detector. Refer to EC-40, "EVAPORATIVE EMISSION LINE DRAWING" .

ON BOARD REFUELING VAPOR RECOVERY (ORVR)

PFP:00032

System Description

ABS006ZB

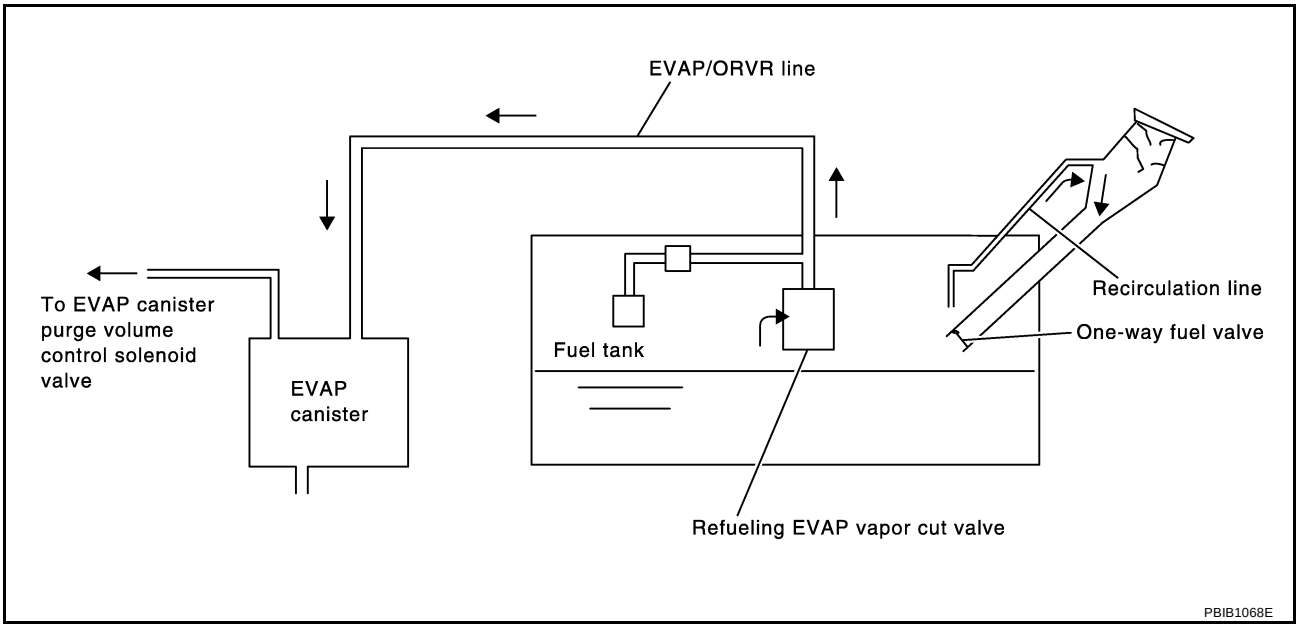

From the beginning of refueling, the air and vapor inside the fuel tank go through refueling EVAP vapor cut valve and EVAP/ORVR line to the EVAP canister. The vapor is absorbed by the EVAP canister and the air is released to the atmosphere.
When the refueling has reached the full level of the fuel tank, the refueling EVAP vapor cut valve is closed and refueling is stopped because of auto shut-off. The vapor which was absorbed by the EVAP canister is purged during driving.

WARNING:

When conducting inspections below, be sure to observe the following:

- **Put a “CAUTION: INFLAMMABLE” sign in workshop.**
- **Do not smoke while servicing fuel system. Keep open flames and sparks away from work area.**
- **Be sure to furnish the workshop with a CO_2 fire extinguisher.**

CAUTION:

- **Before removing fuel line parts, carry out the following procedures:**
  - **Put drained fuel in an explosion-proof container and put lid on securely.**
  - **Release fuel pressure from fuel line. Refer to Fuel Pressure Release, EC-99, "FUEL PRESSURE RELEASE" .**
  - **Disconnect battery ground cable.**
- **Always replace O-ring when the fuel gauge retainer is removed.**
- **Do not kink or twist hose and tube when they are installed.**
- **Do not tighten hose and clamps excessively to avoid damaging hoses.**
- **After installation, run engine and check for fuel leaks at connection.**
- **Do not attempt to top off the fuel tank after the fuel pump nozzle shuts off automatically. Continued refueling may cause fuel overflow, resulting in fuel spray and possibly a fire.**

Diagnostic Procedure

ABS006ZC

SYMPTOM: FUEL ODOR FROM EVAP CANISTER IS STRONG.

1. CHECK EVAP CANISTER

1. Remove EVAP canister with EVAP canister vent control valve and EVAP control system pressure sensor attached.
2. Weigh the EVAP canister with EVAP canister vent control valve and EVAP control system pressure sensor attached.
   The weight should be less than 2.1 kg (4.6 lb).

OK or NG

OK >> GO TO 2.
NG >> GO TO 3.

2. CHECK IF EVAP CANISTER SATURATED WITH WATER

Does water drain from the EVAP canister?

Yes or No

Yes >> GO TO 3.
No >> GO TO 5.

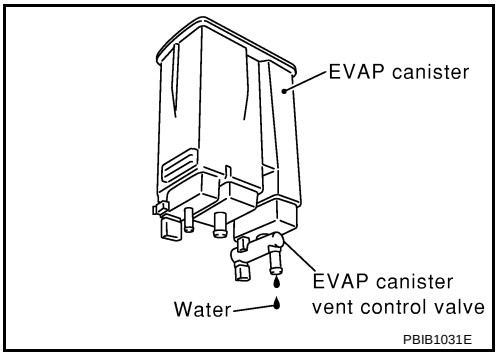

3. REPLACE EVAP CANISTER

Replace EVAP canister with a new one.

>> GO TO 4.

4. DETECT MALFUNCTIONING PART

Check the EVAP hose between EVAP canister and vehicle frame for clogging or poor connection.

>> Repair or replace EVAP hose.

5. CHECK REFUELING EVAP VAPOR CUT VALVE

Refer to EC-49, "Component Inspection" .

OK or NG

OK >> **INSPECTION END**
NG >> Replace refueling EVAP vapor cut valve with fuel tank.

SYMPTOM: CANNOT REFUEL/FUEL ODOR FROM THE FUEL FILLER OPENING IS STRONG WHILE REFUELING.

1. CHECK EVAP CANISTER

1. Remove EVAP canister with EVAP canister vent control valve and EVAP control system pressure sensor attached.
2. Weigh the EVAP canister with EVAP canister vent control valve and EVAP control system pressure sensor attached.
   The weight should be less than 2.1 kg (4.6 lb).

OK or NG

OK >> GO TO 2.
NG >> GO TO 3.

2. CHECK IF EVAP CANISTER SATURATED WITH WATER

Does water drain from the EVAP canister?

Yes or No

Yes >> GO TO 3.
No >> GO TO 5.

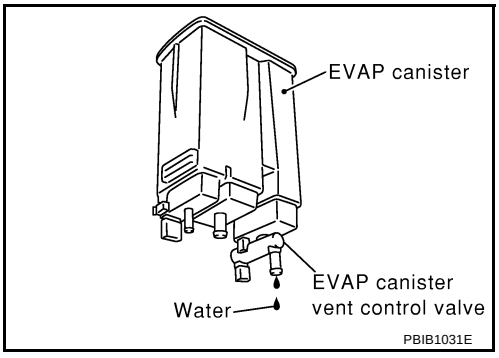

3. REPLACE EVAP CANISTER

Replace EVAP canister with a new one.

>> GO TO 4.

4. DETECT MALFUNCTIONING PART

Check the EVAP hose between EVAP canister and vehicle frame for clogging or poor connection.

>> Repair or replace EVAP hose.

5. CHECK VENT HOSES AND VENT TUBES

Check hoses and tubes between EVAP canister and refueling control valve for clogging, kink, looseness and improper connection.

OK or NG

OK >> GO TO 6.
NG >> Repair or replace hoses and tubes.

6. CHECK FILLER NECK TUBE

Check recirculation line for clogging, dents and cracks.

OK or NG

OK >> GO TO 7.
NG >> Replace filler neck tube.

7. CHECK REFUELING EVAP VAPOR CUT VALVE

Refer to EC-49, "Component Inspection" .

OK or NG

OK >> GO TO 8.
NG >> Replace refueling EVAP vapor cut valve with fuel tank.

8. CHECK FUEL FILLER TUBE

Check filler neck tube and hose connected to the fuel tank for clogging, dents and cracks.

OK or NG

OK >> GO TO 9.
NG >> Replace fuel filler tube.

9. CHECK ONE-WAY FUEL VALVE-I

Check one-way valve for clogging.

OK or NG

OK >> GO TO 10.
NG >> Repair or replace one-way fuel valve with fuel tank.

10. CHECK ONE-WAY FUEL VALVE-II

1. Make sure that fuel is drained from the tank.
2. Remove fuel filler tube and hose.
3. Check one-way fuel valve for operation as follows.
   When a stick is inserted, the valve should open, when removing stick it should close.
   Do not drop any material into the tank.

OK or NG

OK >> **INSPECTION END**
NG >> Replace fuel filler tube or replace one-way fuel valve with fuel tank.

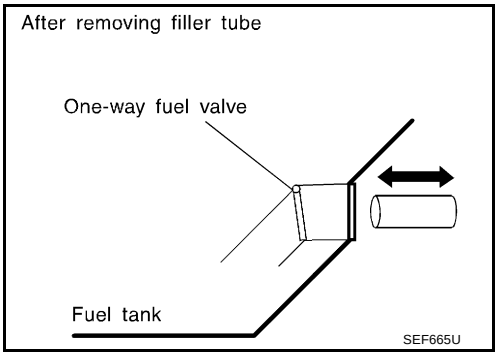

ABS006ZD

Component Inspection

REFUELING EVAP VAPOR CUT VALVE

With CONSULT-II

1. Remove fuel tank. Refer to FL-10, "FUEL TANK" .
2. Drain fuel from the tank as follows:

a. Remove fuel feed hose located on the fuel gauge retainer.
b. Connect a spare fuel hose, one side to fuel gauge retainer where the hose was removed and the other side to a fuel container.
c. Drain fuel using “FUEL PUMP RELAY” in “ACTIVE TEST” mode with CONSULT-II.

3. Check refueling EVAP vapor cut valve for being stuck to close as follows.
   Blow air into the refueling EVAP vapor cut valve (from the end of EVAP/ORVR line hose), and check that the air flows freely into the tank.
4. Check refueling EVAP vapor cut valve for being stuck to open as follows.

a. Connect vacuum pump to hose end.
b. Remove fuel gauge retainer with fuel gauge unit.
   Always replace O-ring with new one.
c. Put fuel tank upside down.

d. Apply vacuum pressure to hose end [–13.3 kPa (–100 mmHg, –3.94 inHg)] with fuel gauge retainer remaining open and check that the pressure is applicable.

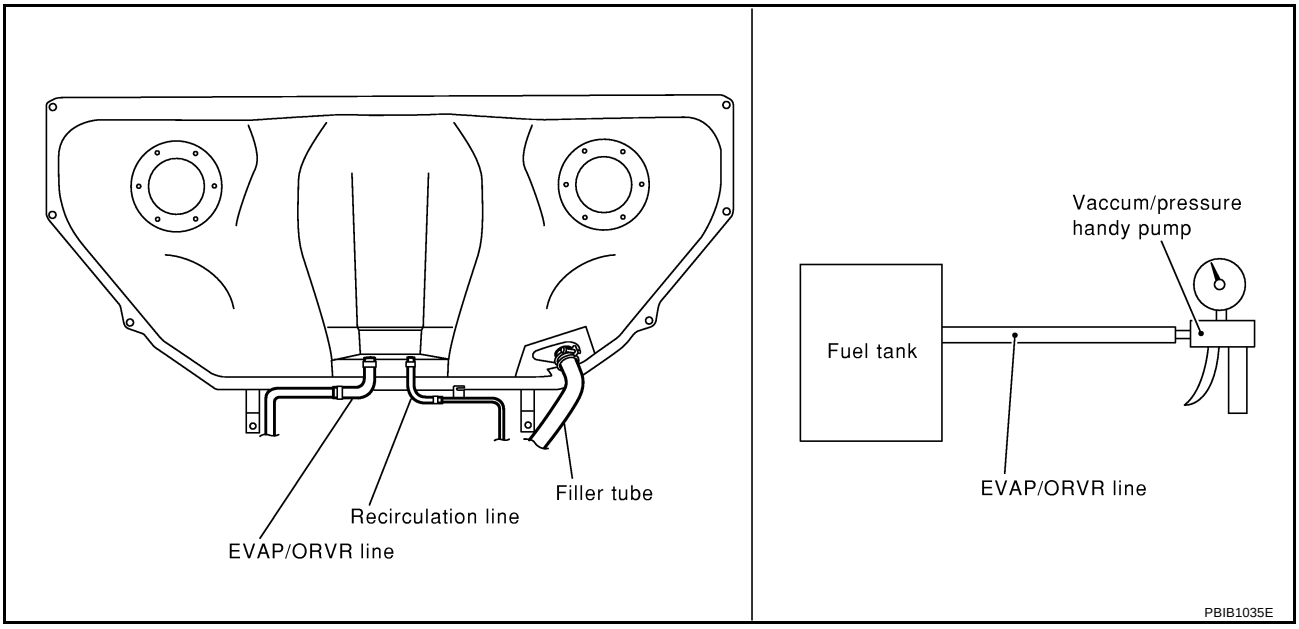

Without CONSULT-II

1. Remove fuel tank. Refer to FL-10, "FUEL TANK" .
2. Drain fuel from the tank as follows:

a. Remove fuel gauge retainer.

b. Drain fuel from the tank using a handy pump into a fuel container.

3. Check refueling EVAP vapor cut valve for being stuck to close as follows.
   Blow air into the refueling EVAP vapor cut valve (from the end of EVAP/ORVR line hose), and check that the air flows freely into the tank.
4. Check refueling EVAP vapor cut valve for being stuck to open as follows.

a. Connect vacuum pump to hose end.

b. Remove fuel gauge retainer with fuel gauge unit.
   Always replace O-ring with new one.

c. Put fuel tank upside down.

d. Apply vacuum pressure to hose end [–13.3 kPa (–100 mmHg, –3.94 inHg)] with fuel gauge retainer remaining open and check that the pressure is applicable.

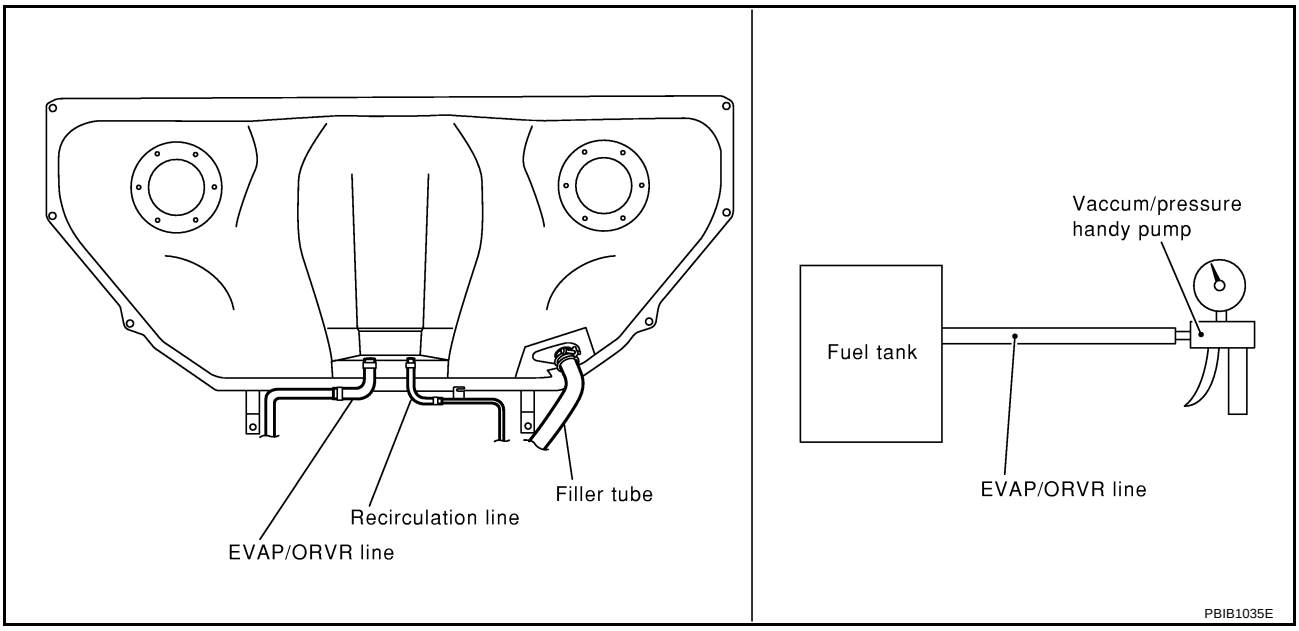

POSITIVE CRANKCASE VENTILATION

PFP:11810

Description

ABS006ZE

SYSTEM DESCRIPTION

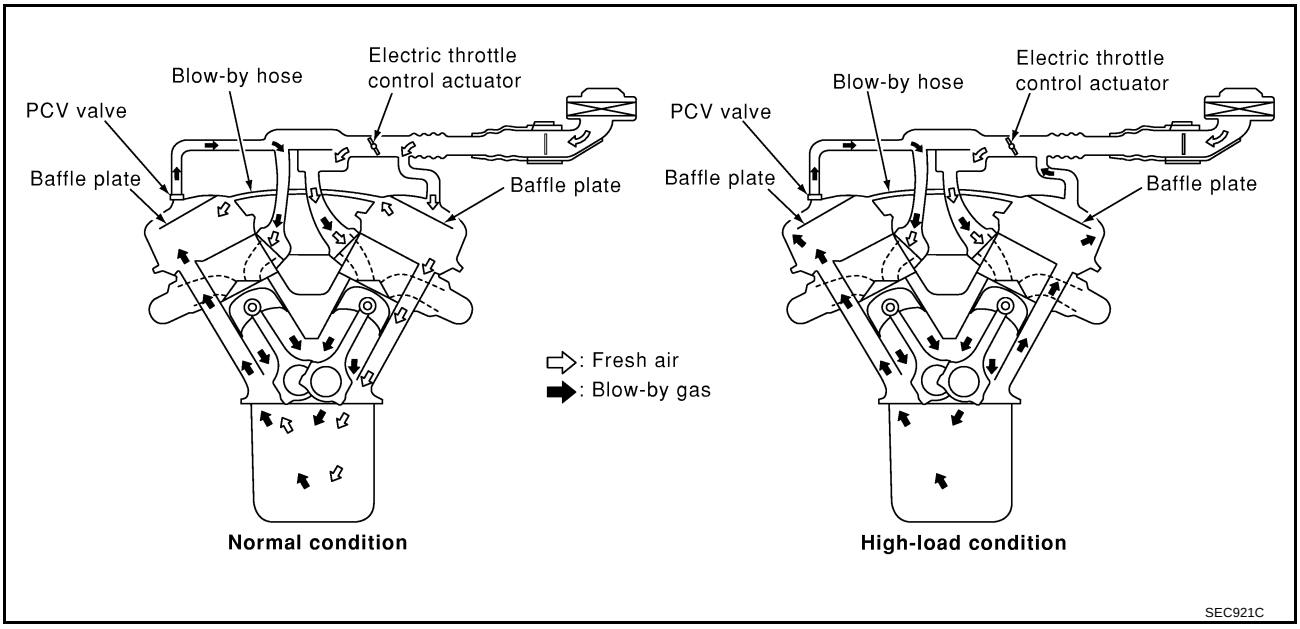

This system returns blow-by gas to the intake manifold.
The positive crankcase ventilation (PCV) valve is provided to conduct crankcase blow-by gas to the intake manifold. During partial throttle operation of the engine, the intake manifold sucks the blow-by gas through the PCV valve. Normally, the capacity of the valve is sufficient to handle any blow-by and a small amount of ventilating air. The ventilating air is then drawn from the air inlet tubes into the crankcase. In this process the air passes through the hose connecting air inlet tubes to rocker cover. Under full-throttle condition, the manifold vacuum is insufficient to draw the blow-by flow through the valve. The flow goes through the hose connection in the reverse direction.
On vehicles with an excessively high blow-by, the valve does not meet the requirement. This is because some of the flow will go through the hose connection to the air inlet tubes under all conditions.

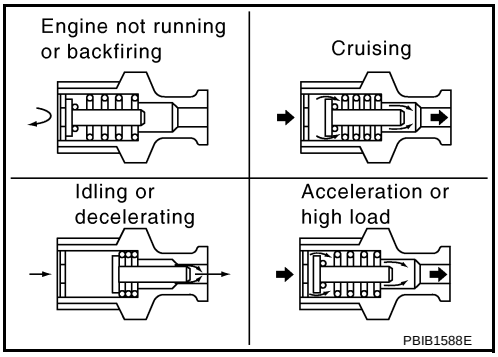

Component Inspection

ABS006ZF

PCV (POSITIVE CRANKCASE VENTILATION) VALVE

With engine running at idle, remove PCV valve from rocker cover. A properly working valve makes a hissing noise as air passes through it. A strong vacuum should be felt immediately when a finger is placed over valve inlet.

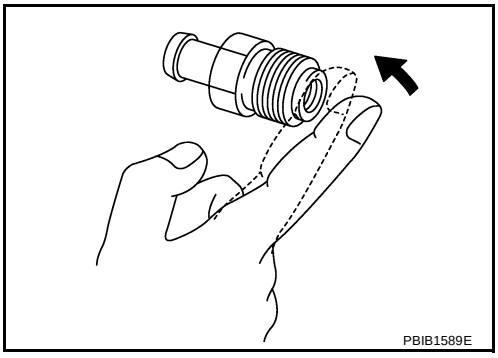

PCV VALVE VENTILATION HOSE

1. Check hoses and hose connections for leaks.
2. Disconnect all hoses and clean with compressed air. If any hose cannot be freed of obstructions, replace.

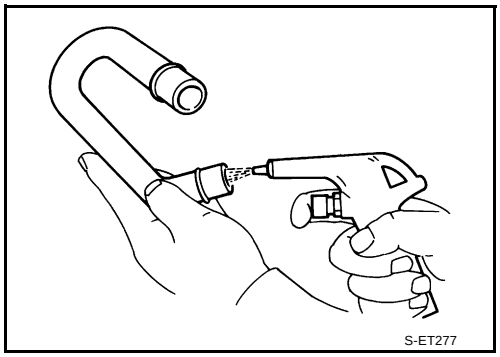

IVIS (INFINITI VEHICLE IMMOBILIZER SYSTEM-NATS)

PFP:28591

Description

ABS00E90

- **If the security indicator lights up with the ignition switch in the ON position or "NATS MALFUNCTION" is displayed on "SELF-DIAG RESULTS" screen, perform self-diagnostic results mode with CONSULT-II using NATS program card. Refer to BL-213, "IVIS (INFINITI VEHICLE IMMOBILIZER SYSTEM-NATS)" .**
- **Confirm no self-diagnostic results of IVIS (NATS) is displayed before touching "ERASE" in "SELF-DIAG RESULTS" mode with CONSULT-II.**
- **When replacing ECM, initialization of IVIS (NATS) system and registration of all IVIS (NATS) ignition key IDs must be carried out with CONSULT-II using NATS program card.**
  Therefore, be sure to receive all keys from vehicle owner. Regarding the procedures of IVIS (NATS) initialization and all IVIS (NATS) ignition key ID registration, refer to CONSULT-II Operation Manual, IVIS/NVIS.

SELF DIAG RESULTS	
DTC RESULTS	TIME
NATS MALFUNCTION [P1610]	0

SEF543X

ON BOARD DIAGNOSTIC (OBD) SYSTEM

PFP:00028

Introduction

ABS006KI

The ECM has an on board diagnostic system, which detects malfunctions related to engine sensors or actuators. The ECM also records various emission-related diagnostic information including:

Emission-related diagnostic information	Diagnostic service
Diagnostic Trouble Code (DTC)	Service $03 of SAE J1979
Freeze Frame data	Service $02 of SAE J1979
System Readiness Test (SRT) code	Service $01 of SAE J1979
1st Trip Diagnostic Trouble Code (1st Trip DTC)	Service $07 of SAE J1979
1st Trip Freeze Frame data	
Test values and Test limits	Service $06 of SAE J1979
Calibration ID	Service $09 of SAE J1979

The above information can be checked using procedures listed in the table below.

×: Applicable —: Not applicable

	DTC	1st trip DTC	Freeze Frame data	1st trip Freeze Frame data	SRT code	SRT status	Test value
CONSULT-II	×	×	×	×	×	×	—
GST	×	×	×	—	×	×	×
ECM	×	×*	—	—	—	×	—

*: When DTC and 1st trip DTC simultaneously appear on the display, they cannot be clearly distinguished from each other.

The malfunction indicator lamp (MIL) on the instrument panel lights up when the same malfunction is detected in two consecutive trips (Two trip detection logic), or when the ECM enters fail-safe mode. (Refer to EC-109 .)

Two Trip Detection Logic

ABS006KJ

When a malfunction is detected for the 1st time, 1st trip DTC and 1st trip Freeze Frame data are stored in the ECM memory. The MIL will not light up at this stage. <1st trip>
If the same malfunction is detected again during the next drive, the DTC and Freeze Frame data are stored in the ECM memory, and the MIL lights up. The MIL lights up at the same time when the DTC is stored. <2nd trip> The “trip” in the “Two Trip Detection Logic” means a driving mode in which self-diagnosis is performed during vehicle operation. Specific on board diagnostic items will cause the ECM to light up or blink the MIL, and store DTC and Freeze Frame data, even in the 1st trip, as shown below.

×: Applicable —: Not applicable

Items	MIL				DTC		1st trip DTC	
	1st trip		2nd trip		1st trip displaying	2nd trip displaying	1st trip displaying	2nd trip display-ing
	Blinking	Lighting up	Blinking	Lighting up				
Misfire (Possible three way catalyst damage) — DTC: P0300 - P0306 is being detected	×	—	—	—	—	—	×	—
Misfire (Possible three way catalyst damage) — DTC: P0300 - P0306 is being detected	—	—	×	—	—	×	—	—
One trip detection diagnoses (Refer to EC-15 .)	—	×	—	—	×	—	—	—
Except above	—	—	—	×	—	×	×	—

When there is an open circuit on MIL circuit, the ECM cannot warn the driver by lighting up MIL when there is malfunction on engine control system.
Therefore, when electrical controlled throttle and part of ECM related diagnoses are continuously detected as NG for 5 trips, ECM warns the driver that engine control system malfunctions and MIL circuit is open by means of operating fail-safe function.

The fail-safe function also operates when above diagnoses except MIL circuit are detected and demands the driver to repair the malfunction.

Engine operating condition in fail-safe mode	Engine speed will not rise more than 2,500 rpm due to the fuel cut

Emission-Related Diagnostic Information

ABS006KK

EMISSION-RELATED DIAGNOSTIC INFORMATION ITEMS

×: Applicable —: Not applicable

Items (CONSULT-II screen terms)	DTC*1		SRT code	Test value/ Test limit (GST only)	Trip		Reference page
	CONSULT-II GST*2	ECM*3					
CAN COMM CIRCUIT	U1000	1000*5	—	—	1	×	EC-171
CAN COMM CIRCUIT	U1001	1001*5	—	—	2	—	EC-171
NO DTC IS DETECTED. FURTHER TESTING MAY BE REQUIRED.	**P0000**	**0000**	—	—	—	Flashing*9	—
INT/V TIM CONT-B1	P0011	0011	—	—	2	×	EC-174
INT/V TIM CONT-B2	P0021	0021	—	—	2	×	EC-174
HO2S2 HTR (B1)	P0037	0037	×	×	2	×	EC-178
HO2S2 HTR (B1)	P0038	0038	×	×	2	×	EC-178
HO2S2 HTR (B2)	P0057	0057	×	×	2	×	EC-178
HO2S2 HTR (B2)	P0058	0058	×	×	2	×	EC-178
MAF SEN/CIRCUIT	P0101	0101	—	—	2	×	EC-186
MAF SEN/CIRCUIT	P0102	0102	—	—	1	×	EC-195
MAF SEN/CIRCUIT	P0103	0103	—	—	1	×	EC-195
IAT SEN/CIRCUIT	P0112	0112	—	—	2	×	EC-203
IAT SEN/CIRCUIT	P0113	0113	—	—	2	×	EC-203
ECT SEN/CIRCUIT	P0117	0117	—	—	1	×	EC-208
ECT SEN/CIRCUIT	P0118	0118	—	—	1	×	EC-208
TP SEN 2/CIRC	P0122	0122	—	—	1	×	EC-213
TP SEN 2/CIRC	P0123	0123	—	—	1	×	EC-213
ECT SENSOR	P0125	0125	—	—	1	×	EC-220
IAT SENSOR	P0127	0127	—	—	2	×	EC-223
THERMSTAT FNCTN	P0128	0128	—	—	2	×	EC-226
HO2S2 (B1)	P0138	0138	—	×	2	×	EC-228
HO2S2 (B1)	P0139	0139	×	×	2	×	EC-237
HO2S2 (B2)	P0158	0158	—	×	2	×	EC-228
HO2S2 (B2)	P0159	0159	×	×	2	×	EC-237
FUEL SYS-LEAN-B1	P0171	0171	—	—	2	×	EC-248
FUEL SYS-RICH-B1	P0172	0172	—	—	2	×	EC-258
FUEL SYS-LEAN-B2	P0174	0174	—	—	2	×	EC-248
FUEL SYS-RICH-B2	P0175	0175	—	—	2	×	EC-258
FTT SENSOR	P0181	0181	—	—	2	×	EC-267
FTT SEN/CIRCUIT	P0182	0182	—	—	2	×	EC-273
FTT SEN/CIRCUIT	P0183	0183	—	—	2	×	EC-273
TP SEN 1/CIRC	P0222	0222	—	—	1	×	EC-278
TP SEN 1/CIRC	P0223	0223	—	—	1	×	EC-278
MULTI CYL MISFIRE	P0300	0300	—	—	2	×	EC-285

Items (CONSULT-II screen terms)	DTC*1		SRT code	Test value/ Test limit (GST only)	Trip		Reference page
	CONSULT-II GST*2	ECM*3					
CYL 1 MISFIRE	P0301	0301	—	—	2	×	EC-285
CYL 2 MISFIRE	P0302	0302	—	—	2	×	EC-285
CYL 3 MISFIRE	P0303	0303	—	—	2	×	EC-285
CYL 4 MISFIRE	P0304	0304	—	—	2	×	EC-285
CYL 5 MISFIRE	P0305	0305	—	—	2	×	EC-285
CYL 6 MISFIRE	P0306	0306	—	—	2	×	EC-285
KNOCK SEN/CIRC-B1	P0327	0327	—	—	2	—	EC-295
KNOCK SEN/CIRC-B1	P0328	0328	—	—	2	—	EC-295
CKP SEN/CIRCUIT	P0335	0335	—	—	2	×	EC-300
CMP SEN/CIRC-B1	P0340	0340	—	—	2	×	EC-307
CMP SEN/CIRC-B2	P0345	0345	—	—	2	×	EC-307
TW CATALYST SYS-B1	P0420	0420	×	×	2	×	EC-316
TW CATALYST SYS-B2	P0430	0430	×	×	2	×	EC-316
EVAP PURG FLOW/MON	P0441	0441	×	×	2	×	EC-322
EVAP SMALL LEAK	P0442	0442	×	×	2	×	EC-327
PURG VOLUME CONT/V	P0444	0444	—	—	2	×	EC-336
PURG VOLUME CONT/V	P0445	0445	—	—	2	×	EC-336
VENT CONTROL VALVE	P0447	0447	—	—	2	×	EC-343
EVAP SYS PRES SEN	P0451	0451	—	—	2	×	EC-350
EVAP SYS PRES SEN	P0452	0452	—	—	2	×	EC-353
EVAP SYS PRES SEN	P0453	0453	—	—	2	×	EC-359
EVAP GROSS LEAK	P0455	0455	—	—	2	×	EC-367
EVAP VERY SML LEAK	P0456	0456	×*4	×	2	×	EC-375
FUEL LEV SEN SLOSH	P0460	0460	—	—	2	×	EC-385
FUEL LEVEL SENSOR	P0461	0461	—	—	2	×	EC-387
FUEL LEVL SEN/CIRC	P0462	0462	—	—	2	×	EC-389
FUEL LEVEL SEN/CIRC	P0463	0463	—	—	2	×	EC-389
VEH SPEED SEN/CIRC*6	P0500	0500	—	—	2	×	EC-391
ISC SYSTEM	P0506	0506	—	—	2	×	EC-393
ISC SYSTEM	P0507	0507	—	—	2	×	EC-395
PW ST P SEN/CIRC	P0550	0550	—	—	2	—	EC-397
ECM	P0605	0605	—	—	1 or 2	× or —	EC-402
TCM	P0700	0700	—	—	1	×	AT-113
PNP SW/CIRC	P0705	0705	—	—	2	×	AT-114
ATF TEMP SEN/CIRC	P0710	0710	—	—	2	×	AT-136
VEH SPD SEN/CIR AT*6	P0720	0720	—	—	2	×	AT-118
ENGINE SPEED SIG	P0725	0725	—	—	2	×	AT-123
TCC SOLENOID/CIRC	P0740	0740	—	—	2	×	AT-125
A/T TCC S/V FNCTN	P0744	0744	—	—	2	×	AT-127
L/PRESS SOL/CIRC	P0745	0745	—	—	2	×	AT-129
A/F SEN1 HTR (B1)	P1031	1031	×	×	2	×	EC-405
A/F SEN1 HTR (B1)	P1032	1032	×	×	2	×	EC-405

Items (CONSULT-II screen terms)	DTC*1		SRT code	Test value/ Test limit (GST only)	Trip		Reference page
	CONSULT-II GST*2	ECM*3					
A/F SEN1 HTR (B2)	P1051	1051	×	×	2	×	EC-405
A/F SEN1 HTR (B2)	P1052	1052	×	×	2	×	EC-405
ECM BACK UP/CIRC	P1065	1065	—	—	2	×	EC-413
INT/V TIM V/CIR-B1	P1111	1111	—	—	2	×	EC-417
ETC ACTR	P1121	1121	—	—	1	×	EC-424
ETC FUNCTION/CIRC	P1122	1122	—	—	1	×	EC-426
ETC MOT PWR	P1124	1124	—	—	1	×	EC-432
ETC MOT PWR	P1126	1126	—	—	1	×	EC-432
ETC MOT	P1128	1128	—	—	1	×	EC-437
INT/V TIM V/CIR-B2	P1136	1136	—	—	2	×	EC-417
HO2S2 (B1)	P1146	1146	×	×	2	×	EC-442
HO2S2 (B1)	P1147	1147	×	×	2	×	EC-453
CLOSED LOOP-B1	P1148	1148	—	—	1	×	EC-464
HO2S2 (B2)	P1166	1166	×	×	2	×	EC-442
HO2S2 (B2)	P1167	1167	×	×	2	×	EC-453
CLOSED LOOP-B2	P1168	1168	—	—	1	×	EC-464
TCS C/U FUNCTN	P1211	1211	—	—	2	—	EC-465
TCS/CIRC	P1212	1212	—	—	2	—	EC-466
ENG OVER TEMP	P1217	1217	—	—	1	×	EC-467
CTP LEARNING	P1225	1225	—	—	2	—	EC-479
CTP LEARNING	P1226	1226	—	—	2	—	EC-481
SENSOR POWER/CIRC	P1229	1229	—	—	1	×	EC-483
A/F SENSOR1 (B1)	P1271	1271	—	×	2	×	EC-488
A/F SENSOR1 (B1)	P1272	1272	—	×	2	×	EC-497
A/F SENSOR1 (B1)	P1273	1273	—	×	2	×	EC-506
A/F SENSOR1 (B1)	P1274	1274	—	×	2	×	EC-516
A/F SENSOR1 (B1)	P1276	1276	—	×	2	×	EC-526
A/F SENSOR1 (B1)	P1278	1278	×	×	2	×	EC-536
A/F SENSOR1 (B1)	P1279	1279	×	×	2	×	EC-548
A/F SENSOR1 (B2)	P1281	1281	—	×	2	×	EC-488
A/F SENSOR1 (B2)	P1282	1282	—	×	2	×	EC-497
A/F SENSOR1 (B2)	P1283	1283	—	×	2	×	EC-506
A/F SENSOR1 (B2)	P1284	1284	—	×	2	×	EC-516
A/F SENSOR1 (B2)	P1286	1286	—	×	2	×	EC-526
A/F SENSOR1 (B2)	P1288	1288	×	×	2	×	EC-536
A/F SENSOR1 (B2)	P1289	1289	×	×	2	×	EC-548
PURG VOLUME CONT/V	P1444	1444	—	—	2	×	EC-560
VENT CONTROL VALVE	P1446	1446	—	—	2	×	EC-568
ASCD SW*7	P1564	1564	—	—	1	—	EC-581, EC-574
ICC COMMAND VALUE*8	P1568	1568	—	—	1	—	EC-587
ASCD BRAKE SW*7	P1572	1572	—	—	1	—	EC-597, EC-588

Items (CONSULT-II screen terms)	DTC*1		SRT code	Test value/ Test limit (GST only)	Trip		Reference page
	CONSULT-II GST*2	ECM*3					
ASCD VHL SPD SEN*7	P1574	1574	—	—	1	—	EC-607, EC-605
NATS MALFUNCTION	P1610 - P1615	1610 - 1615	—	—	2	—	EC-53
TPV SEN/CIRC A/T	P1705	1705	—	—	1	×	AT-133
P-N POS SW/CIRCUIT	P1706	1706	—	—	2	×	EC-609
TURBINE REV S/CIRC	P1716	1716	—	—	2	×	AT-141
A/T INTERLOCK	P1730	1730	—	—	1	×	AT-145
I/C SOLENOID/CIRC	P1752	1752	—	—	1	×	AT-150
I/C SOLENOID FNCTN	P1754	1754	—	—	1	×	AT-152
FR/B SOLENOID/CIRC	P1757	1757	—	—	1	×	AT-154
FR/B SOLENOID FNCT	P1759	1759	—	—	1	×	AT-156
D/C SOLENOID/CIRC	P1762	1762	—	—	1	×	AT-158
D/C SOLENOID FNCTN	P1764	1764	—	—	1	×	AT-160
HLR/C SOL/CIRC	P1767	1767	—	—	1	×	AT-162
HLR/C SOL FNCTN	P1769	1769	—	—	1	×	AT-164
LC/B SOLENOID/CIRC	P1772	1772	—	—	1	×	AT-166
LC/B SOLENOID FNCT	P1774	1774	—	—	1	×	AT-168
BRAKE SW/CIRCUIT	P1805	1805	—	—	2	—	EC-614
APP SEN 1/CIRC	P2122	2122	—	—	1	×	EC-619
APP SEN 1/CIRC	P2123	2123	—	—	1	×	EC-619
APP SEN 2/CIRC	P2127	2127	—	—	1	×	EC-626
APP SEN 2/CIRC	P2128	2128	—	—	1	×	EC-626
TP SENSOR	P2135	2135	—	—	1	×	EC-633
APP SENSOR	P2138	2138	—	—	1	×	EC-640

*1: 1st trip DTC No. is the same as DTC No.
*2: This number is prescribed by SAE J2012.
*3: In Diagnostic Test Mode II (Self-diagnostic results), this number is controlled by NISSAN.
*4: SRT code will not be set if the self-diagnostic result is NG.
*5: The trouble shooting for this DTC needs CONSULT-II.
*6: When the fail-safe operations for both self-diagnoses occur at the same time, the MIL illuminates.
*7: For models with ICC or ASCD system.
*8: For models with ICC system.
*9: When the ECM is in the mode of displaying SRT status, MIL may flash. For the details, refer to EC-63, "How to Display SRT Status" .

DTC AND 1ST TRIP DTC

The 1st trip DTC (whose number is the same as the DTC number) is displayed for the latest self-diagnostic result obtained. If the ECM memory was cleared previously, and the 1st trip DTC did not reoccur, the 1st trip DTC will not be displayed.
If a malfunction is detected during the 1st trip, the 1st trip DTC is stored in the ECM memory. The MIL will not light up (two trip detection logic). If the same malfunction is not detected in the 2nd trip (meeting the required driving pattern), the 1st trip DTC is cleared from the ECM memory. If the same malfunction is detected in the 2nd trip, both the 1st trip DTC and DTC are stored in the ECM memory and the MIL lights up. In other words, the DTC is stored in the ECM memory and the MIL lights up when the same malfunction occurs in two consecutive trips. If a 1st trip DTC is stored and a non-diagnostic operation is performed between the 1st and 2nd trips, only the 1st trip DTC will continue to be stored. For malfunctions that blink or light up the MIL during the 1st trip, the DTC and 1st trip DTC are stored in the ECM memory.
Procedures for clearing the DTC and the 1st trip DTC from the ECM memory are described in EC-68, "HOW TO ERASE EMISSION-RELATED DIAGNOSTIC INFORMATION" .

For malfunctions in which 1st trip DTCs are displayed, refer to EC-55, "EMISSION-RELATED DIAGNOSTIC INFORMATION ITEMS" . These items are required by legal regulations to continuously monitor the system/component. In addition, the items monitored non-continuously are also displayed on CONSULT-II.
1st trip DTC is specified in Service $07 of SAE J1979. 1st trip DTC detection occurs without lighting up the MIL and therefore does not warn the driver of a malfunction. However, 1st trip DTC detection will not prevent the vehicle from being tested, for example during Inspection/Maintenance (I/M) tests.
When a 1st trip DTC is detected, check, print out or write down and erase (1st trip) DTC and Freeze Frame data as specified in Work Flow procedure Step II, refer to EC-102, "WORK FLOW" . Then perform DTC Confirmation Procedure or Overall Function Check to try to duplicate the malfunction. If the malfunction is duplicated, the item requires repair.

How to Read DTC and 1st Trip DTC

DTC and 1st trip DTC can be read by the following methods.

With CONSULT-II

With GST

CONSULT-II or GST (Generic Scan Tool) Examples: P0340, P1148, P1706, etc.
These DTCs are prescribed by SAE J2012.
(CONSULT-II also displays the malfunctioning component or system.)

No Tools

The number of blinks of the MIL in the Diagnostic Test Mode II (Self-Diagnostic Results) indicates the DTC. Example: 0340, 1148, 1706, etc.
These DTCs are controlled by NISSAN.

- **1st trip DTC No. is the same as DTC No.**
- **Output of a DTC indicates a malfunction. However, GST or the Diagnostic Test Mode II do not indicate whether the malfunction is still occurring or has occurred in the past and has returned to normal. CONSULT-II can identify malfunction status as shown below. Therefore, using CONSULT-II (if available) is recommended.**

A sample of CONSULT-II display for DTC and 1st trip DTC is shown below. DTC or 1st trip DTC of a malfunction is displayed in SELF-DIAGNOSTIC RESULTS mode of CONSULT-II. Time data indicates how many times the vehicle was driven after the last detection of a DTC.
If the DTC is being detected currently, the time data will be [0].
If a 1st trip DTC is stored in the ECM, the time data will be [1t].

DTC display

SELF DIAG RESULTS	
DTC RESULTS	TIME
CKP SEN/CIRCUIT [P0335]	0

1st trip DTC display

SELF DIAG RESULTS	
DTC RESULTS	TIME
CKP SEN/CIRCUIT [P0335]	1t

PBIB0911E

FREEZE FRAME DATA AND 1ST TRIP FREEZE FRAME DATA

The ECM records the driving conditions such as fuel system status, calculated load value, engine coolant temperature, short term fuel trim, long term fuel trim, engine speed, vehicle speed, base fuel schedule and intake air temperature at the moment a malfunction is detected.
Data which are stored in the ECM memory, along with the 1st trip DTC, are called 1st trip freeze frame data. The data, stored together with the DTC data, are called freeze frame data and displayed on CONSULT-II or GST. The 1st trip freeze frame data can only be displayed on the CONSULT-II screen, not on the GST. For details, see EC-136, "Freeze Frame Data and 1st Trip Freeze Frame Data" .
Only one set of freeze frame data (either 1st trip freeze frame data or freeze frame data) can be stored in the ECM. 1st trip freeze frame data is stored in the ECM memory along with the 1st trip DTC. There is no priority for 1st trip freeze frame data and it is updated each time a different 1st trip DTC is detected. However, once freeze frame data (2nd trip detection/MIL on) is stored in the ECM memory, 1st trip freeze frame data is no longer stored. Remember, only one set of freeze frame data can be stored in the ECM. The ECM has the following priorities to update the data.

Priority	Items	
1	Freeze frame data	Misfire — DTC: P0300 - P0306 Fuel Injection System Function — DTC: P0171, P0172, P0174, P0175
2		Except the above items (Includes A/T related items)
3	1st trip freeze frame data	

For example, the EGR malfunction (Priority: 2) was detected and the freeze frame data was stored in the 2nd trip. After that when the misfire (Priority: 1) is detected in another trip, the freeze frame data will be updated from the EGR malfunction to the misfire. The 1st trip freeze frame data is updated each time a different malfunction is detected. There is no priority for 1st trip freeze frame data. However, once freeze frame data is stored in the ECM memory, 1st trip freeze data is no longer stored (because only one freeze frame data or 1st trip freeze frame data can be stored in the ECM). If freeze frame data is stored in the ECM memory and freeze frame data with the same priority occurs later, the first (original) freeze frame data remains unchanged in the ECM memory.
Both 1st trip freeze frame data and freeze frame data (along with the DTCs) are cleared when the ECM memory is erased. Procedures for clearing the ECM memory are described in EC-68, "HOW TO ERASE EMISSION-RELATED DIAGNOSTIC INFORMATION" .

SYSTEM READINESS TEST (SRT) CODE

System Readiness Test (SRT) code is specified in Service $01 of SAE J1979.
As part of an enhanced emissions test for Inspection & Maintenance (I/M), certain states require the status of SRT be used to indicate whether the ECM has completed self-diagnosis of major emission systems and components. Completion must be verified in order for the emissions inspection to proceed.
If a vehicle is rejected for a State emissions inspection due to one or more SRT items indicating “INCMP”, use the information in this Service Manual to set the SRT to “CMPLT”.
In most cases the ECM will automatically complete its self-diagnosis cycle during normal usage, and the SRT status will indicate “CMPLT” for each application system. Once set as “CMPLT”, the SRT status remains “CMPLT” until the self-diagnosis memory is erased.
Occasionally, certain portions of the self-diagnostic test may not be completed as a result of the customer's normal driving pattern; the SRT will indicate “INCMP” for these items.

NOTE:
The SRT will also indicate “INCMP” if the self-diagnosis memory is erased for any reason or if the ECM memory power supply is interrupted for several hours.
If, during the state emissions inspection, the SRT indicates “CMPLT” for all test items, the inspector will continue with the emissions test. However, if the SRT indicates “INCMP” for one or more of the SRT items the vehicle is returned to the customer untested.

NOTE:
If MIL is ON during the state emissions inspection, the vehicle is also returned to the customer untested even though the SRT indicates “CMPLT” for all test items. Therefore, it is important to check SRT (“CMPLT”) and DTC (No DTCs) before the inspection.

SRT Item

The table below shows required self-diagnostic items to set the SRT to “CMPLT”.

SRT item (CONSULT-II indication)	Performance Priority*	Required self-diagnostic items to set the SRT to “CMPLT”	Corresponding DTC No.
CATALYST	2	Three way catalyst function	P0420, P0430
EVAP SYSTEM	1	EVAP control system	P0442
	2	EVAP control system	P0456
	2	EVAP control system purge flow monitoring	P0441
HO2S	2	Air fuel ratio (A/F) sensor 1	P1278, P1288
		Air fuel ratio (A/F) sensor 1	P1279, P1289
		Heated oxygen sensor 2	P0139, P0159
		Heated oxygen sensor 2	P1146, P1166
		Heated oxygen sensor 2	P1147, P1167
HO2S HTR	2	Air fuel ratio (A/F) sensor 1 heater	P1031, P1032, P1051, P1052
		Heated oxygen sensor 2 heater	P0037, P0038, P0057, P0058

*: If completion of several SRTs is required, perform driving patterns (DTC confirmation procedure), one by one based on the priority for models with CONSULT-II.

SRT Set Timing

SRT is set as “CMPLT” after self-diagnosis has been performed one or more times. Completion of SRT is done regardless of whether the result is OK or NG. The set timing is different between OK and NG results and is shown in the table below.

Self-diagnosis result		Example				
		Diagnosis	Ignition cycle ← ON → OFF	← ON → OFF	← ON → OFF	← ON →
All OK	Case 1	P0400	OK (1)	— (1)	OK (2)	— (2)
		P0402	OK (1)	— (1)	— (1)	OK (2)
		P1402	OK (1)	OK (2)	— (2)	— (2)
		SRT of EGR	“CMPLT”	“CMPLT”	“CMPLT”	“CMPLT”
	Case 2	P0400	OK (1)	— (1)	— (1)	— (1)
		P0402	— (0)	— (0)	OK (1)	— (1)
		P1402	OK (1)	OK (2)	— (2)	— (2)
		SRT of EGR	“INCMP”	“INCMP”	“CMPLT”	“CMPLT”
NG exists	Case 3	P0400	OK	OK	—	—
		P0402	—	—	—	—
		P1402	NG	—	NG	NG (Consecutive NG)
		(1st trip) DTC	1st trip DTC	—	1st trip DTC	DTC (= MIL ON)
		SRT of EGR	“INCMP”	“INCMP”	“INCMP”	“CMPLT”

OK: Self-diagnosis is carried out and the result is OK.
NG: Self-diagnosis is carried out and the result is NG.
—: Self-diagnosis is not carried out.

When all SRT related self-diagnoses showed OK results in a single cycle (Ignition OFF-ON-OFF), the SRT will indicate “CMPLT”. → Case 1 above
When all SRT related self-diagnoses showed OK results through several different cycles, the SRT will indicate “CMPLT” at the time the respective self-diagnoses have at least one OK result. → Case 2 above

If one or more SRT related self-diagnoses showed NG results in 2 consecutive cycles, the SRT will also indicate “CMPLT”. → Case 3 above

The table above shows that the minimum number of cycles for setting SRT as “INCMP” is one (1) for each self-diagnosis (Case 1 & 2) or two (2) for one of self-diagnoses (Case 3). However, in preparation for the state emissions inspection, it is unnecessary for each self-diagnosis to be executed twice (Case 3) for the following reasons:

- The SRT will indicate “CMPLT” at the time the respective self-diagnoses have one (1) OK result.
- The emissions inspection requires “CMPLT” of the SRT only with OK self-diagnosis results.
- When, during SRT driving pattern, 1st trip DTC (NG) is detected prior to “CMPLT” of SRT, the self-diagnosis memory must be erased from ECM after repair.
- If the 1st trip DTC is erased, all the SRT will indicate “INCMP”.

  NOTE:
  SRT can be set as “CMPLT” together with the DTC(s). Therefore, DTC check must always be carried out prior to the state emission inspection even though the SRT indicates “CMPLT”.

SRT Service Procedure

If a vehicle has failed the state emissions inspection due to one or more SRT items indicating “INCMP”, review the flowchart diagnostic sequence on the next page.

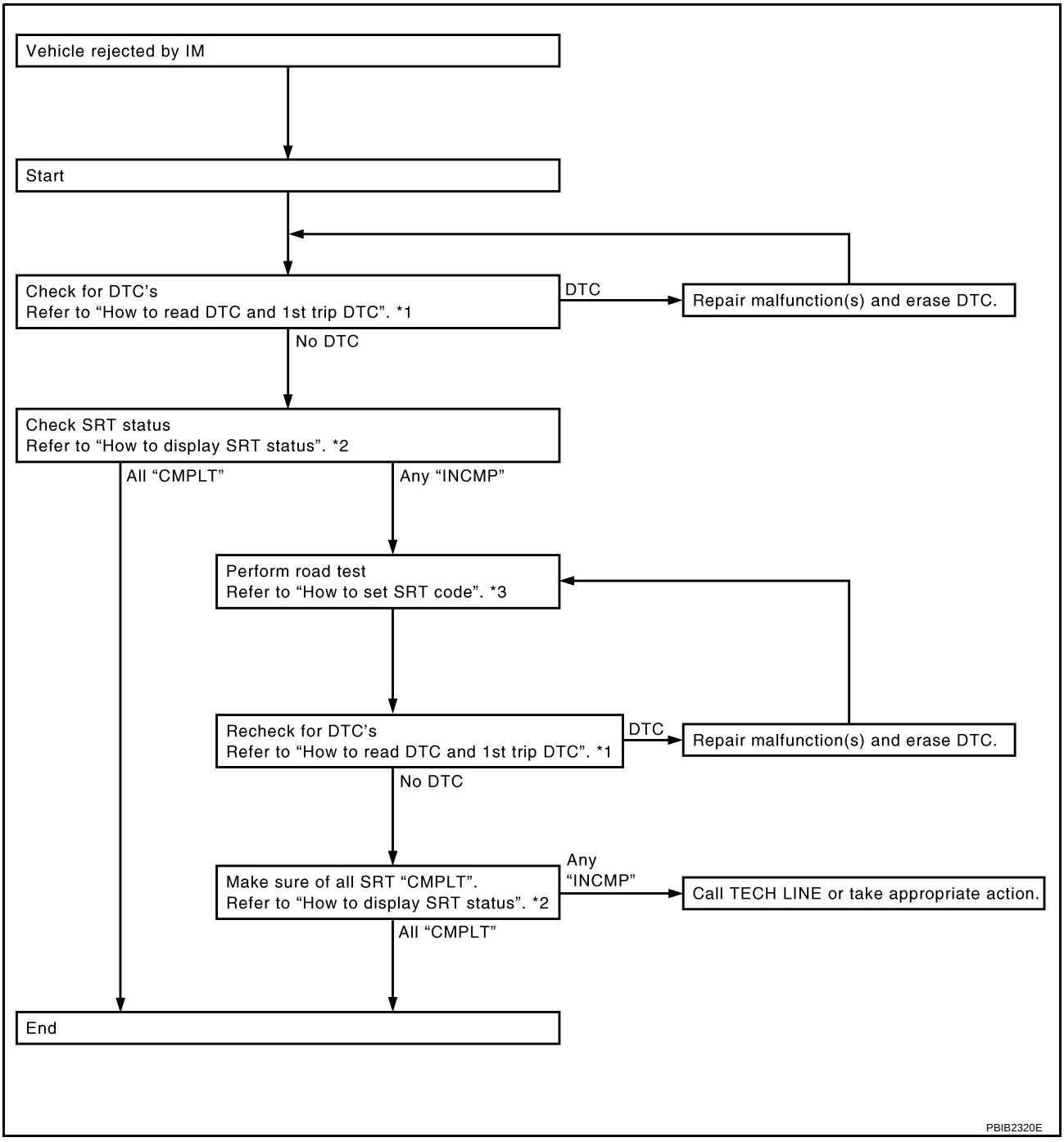

*1 EC-59 *2 EC-63 *3 EC-64

How to Display SRT Status

WITH CONSULT-II

Selecting "SRT STATUS" in "DTC CONFIRMATION" mode with CONSULT-II.

For items whose SRT codes are set, a "CMPLT" is displayed on the CONSULT-II screen; for items whose SRT codes are not set, "INCMP" is displayed.

A sample of CONSULT-II display for SRT code is shown in the figure.

"INCMP" means the self-diagnosis is incomplete and SRT is not set.

"CMPLT" means the self-diagnosis is complete and SRT is set.

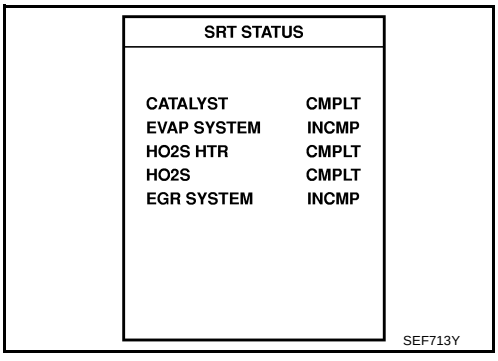

WITH GST

Selecting Service $01 with GST (Generic Scan Tool)

NO TOOLS

A SRT code itself can not be displayed while only SRT status can be.

1. Turn ignition switch ON and wait 20 seconds.
2. SRT status is indicated as shown below.
   - When all SRT codes are set, MIL lights up continuously.
   - When any SRT codes are not set, MIL will flash periodically for 10 seconds.

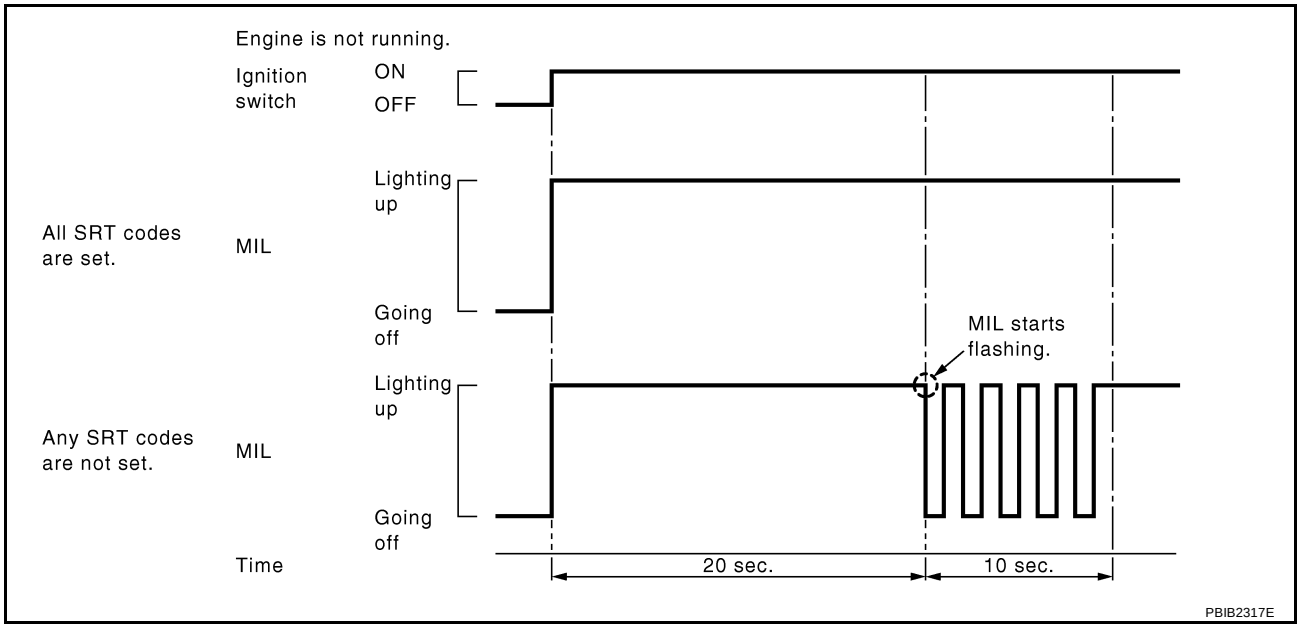

How to Set SRT Code

To set all SRT codes, self-diagnosis for the items indicated above must be performed one or more times. Each diagnosis may require a long period of actual driving under various conditions.

WITH CONSULT-II

Perform corresponding DTC Confirmation Procedure one by one based on Performance Priority in the table on EC-61, "SRT Item" .

WITHOUT CONSULT-II

The most efficient driving pattern in which SRT codes can be properly set is explained on the next page. The driving pattern should be performed one or more times to set all SRT codes.

Driving Pattern

Driving pattern

Note: Always drive vehicle in safe manner according to traffic conditions and obey all traffic laws.
Refer to next page for more information and explanation of chart.

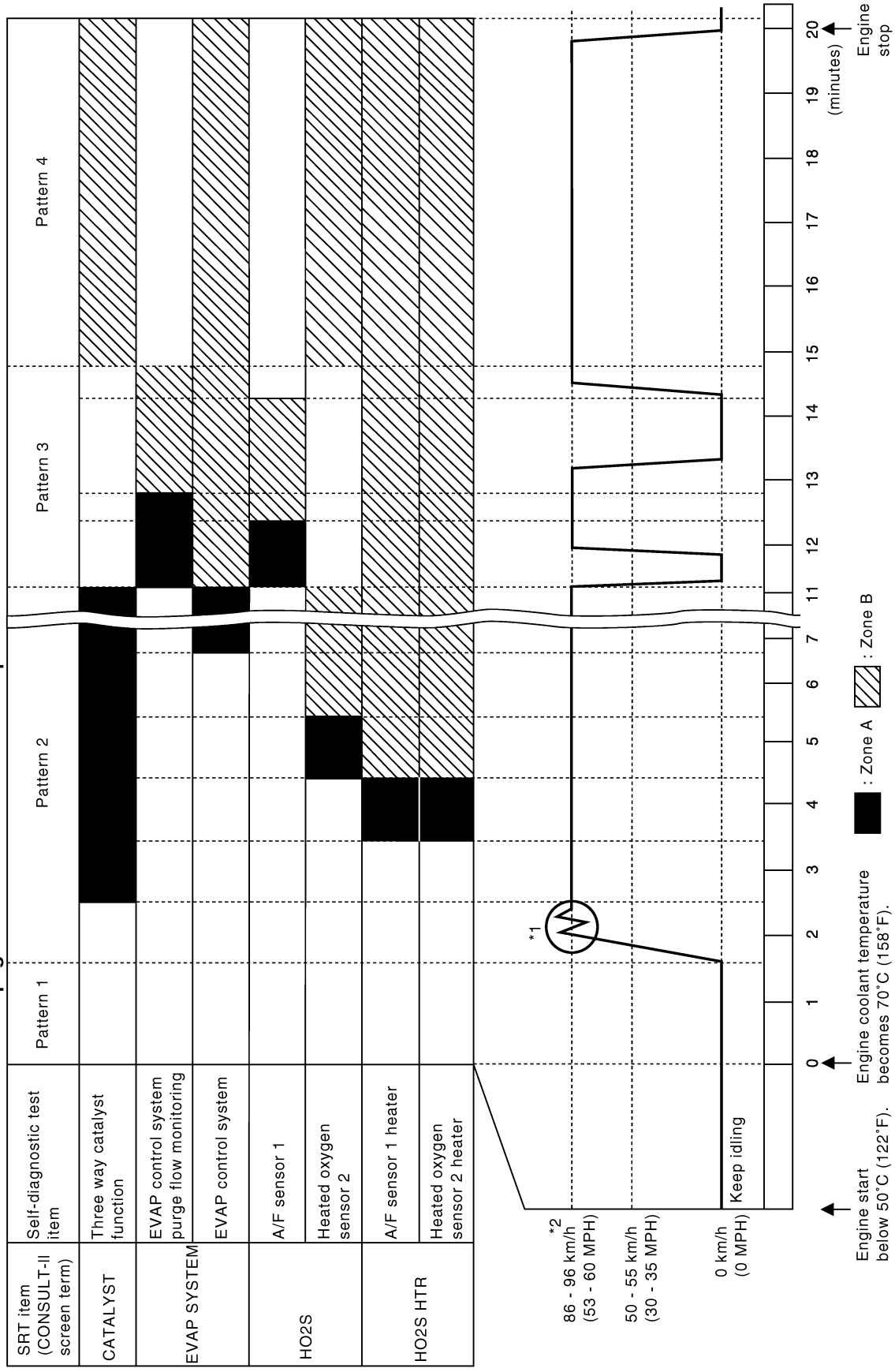

- The time required for each diagnosis varies with road surface conditions, weather, altitude, individual driving habits, etc.
  Zone A refers to the range where the time, required for the diagnosis under normal conditions*, is the shortest.
  Zone B refers to the range where the diagnosis can still be performed if the diagnosis is not completed within zone A.

*: Normal conditions refer to the following:

- Sea level
- Flat road
- Ambient air temperature: 20 - 30°C (68 - 86°F)
- Diagnosis is performed as quickly as possible under normal conditions.
  Under different conditions [For example: ambient air temperature other than 20 - 30°C (68 - 86°F)], diagnosis may also be performed.

Pattern 1:

- **The engine is started at the engine coolant temperature of –10 to 35°C (14 to 95°F) (where the voltage between the ECM terminal 73 and ground is 3.0 - 4.3V).**
- **The engine must be operated at idle speed until the engine coolant temperature is greater than 70°C (158°F) (where the voltage between the ECM terminal 73 and ground is lower than 1.4V).**
- **The engine is started at the fuel tank temperature of warmer than 0°C (32°F) (where the voltage between the ECM terminal 107 and ground is less than 4.1V).**

Pattern 2:

- When steady-state driving is performed again even after it is interrupted, each diagnosis can be conducted. In this case, the time required for diagnosis may be extended.

Pattern 3:

- Operate vehicle following the driving pattern shown in the figure.
- replace the accelerator pedal during decelerating vehicle speed from 90km/h(56MPH) to 0km/h(0MPH).

Pattern 4:

- The accelerator pedal must be held very steady during steady-state driving.
- If the accelerator pedal is moved, the test must be conducted all over again.

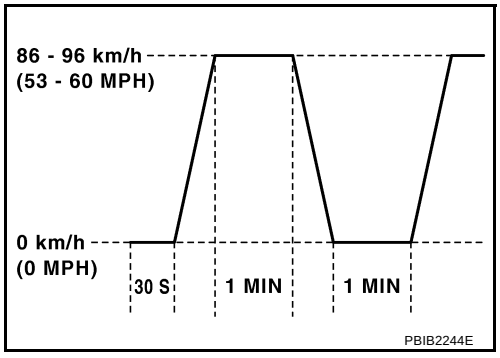

*1: Depress the accelerator pedal until vehicle speed is 90 km/h (56 MPH), then release the accelerator pedal and keep it released for more than 10 seconds. Depress the accelerator pedal until vehicle speed is 90 km/h (56 MPH) again.
*2: Checking the vehicle speed with GST is advised.

Suggested Transmission Gear Position
Set the selector lever in the D position.

TEST VALUE AND TEST LIMIT (GST ONLY — NOT APPLICABLE TO CONSULT-II)

The following is the information specified in Service $06 of SAE J1979.
The test value is a parameter used to determine whether a system/circuit diagnostic test is OK or NG while being monitored by the ECM during self-diagnosis. The test limit is a reference value which is specified as the maximum or minimum value and is compared with the test value being monitored.
These data (test value and test limit) are specified by Test ID (TID) and Component ID (CID) and can be displayed on the GST screen.

Item	Self-diagnostic test item	DTC	Test value (GST display)		Test limit	Conversion
			TID	CID		
CATALYST	Three way catalyst function (Bank 1)	P0420	01H	01H	Max.	1/128
		P0420	02H	81H	Min.	1
	Three way catalyst function (Bank 2)	P0430	03H	02H	Max.	1/128
		P0430	04H	82H	Min.	1
EVAP SYSTEM	EVAP control system (Small leak)	P0442	05H	03H	Max.	1/128mm^2
	EVAP control system purge flow monitoring	P0441	06H	83H	Min.	20mV
	EVAP control system (Very small leak)	P0456	07H	03H	Max.	1/128mm^2
HO2S	Air fuel ratio (A/F) sensor 1 (Bank 1)	P1271	41H	8EH	Min.	5 mV
		P1272	42H	0EH	Max.	5 mV
		P1273	43H	0EH	Max.	0.002
		P1274	44H	8EH	Min.	0.002
		P1278	45H	8EH	Min.	0.004
		P1276	46H	0EH	Max.	5 mV
		P1276	47H	8EH	Min.	5 mV
		P1279	48H	8EH	Min.	0.004
	Air fuel ratio (A/F) sensor 1 (Bank 2)	P1281	4CH	8FH	Min.	5 mV
		P1282	4DH	0FH	Max.	5 mV
		P1283	4EH	0FH	Max.	0.002
		P1284	4FH	8FH	Min.	0.002
		P1288	50H	8FH	Min.	0.004
		P1286	51H	0FH	Max.	5 mV
		P1286	52H	8FH	Min.	5 mV
		P1289	53H	8FH	Min.	0.004
	Heated oxygen sensor 2 (Bank 1)	P0139	19H	86H	Min.	10mV/500ms
		P1147	1AH	86H	Min.	10mV
		P1146	1BH	06H	Max.	10mV
		P0138	1CH	06H	Max.	10mV
	Heated oxygen sensor 2 (Bank 2)	P0159	21H	87H	Min.	10mV/500ms
		P1167	22H	87H	Min.	10mV
		P1166	23H	07H	Max.	10mV
		P0158	24H	07H	Max.	10mV
HO2S HEATER	Air fuel ratio (A/F) sensor 1 heater (Bank 1)	P1032	57H	10H	Max.	5 mV
		P1031	58H	90H	Min.	5 mV
	Air fuel ratio (A/F) sensor 1 heater (Bank 2)	P1052	59H	11H	Max.	5 mV
		P1051	5AH	91H	Min.	5 mV
	Heated oxygen sensor 2 heater (Bank 1)	P0038	2DH	0AH	Max.	20mV
		P0037	2EH	8AH	Min.	20mV
	Heated oxygen sensor 2 heater (Bank 2)	P0058	2FH	0BH	Max.	20mV
		P0057	30H	8BH	Min.	20mV

HOW TO ERASE EMISSION-RELATED DIAGNOSTIC INFORMATION

How to Erase DTC

With CONSULT-II

The emission related diagnostic information in the ECM can be erased by selecting “ERASE” in the “SELF-DIAG RESULTS” mode with CONSULT-II.

If DTCs are displayed for both ECM and TCM (Transmission control module), they need to be erased individually from the ECM and TCM (Transmission control module).

NOTE:

If the DTC is not for A/T related items (see EC-15), skip steps 2 through 4.

1. If the ignition switch stays ON after repair work, be sure to turn ignition switch OFF once. Wait at least 10 seconds and then turn it ON (engine stopped) again.
2. Turn CONSULT-II ON and touch “A/T”.
3. Touch “SELF-DIAG RESULTS”.
4. Touch “ERASE”. [The DTC in the TCM (Transmission control module) will be erased.] Then touch “BACK” twice.
5. Touch “ENGINE”.
6. Touch “SELF-DIAG RESULTS”.
7. Touch “ERASE”. (The DTC in the ECM will be erased.)

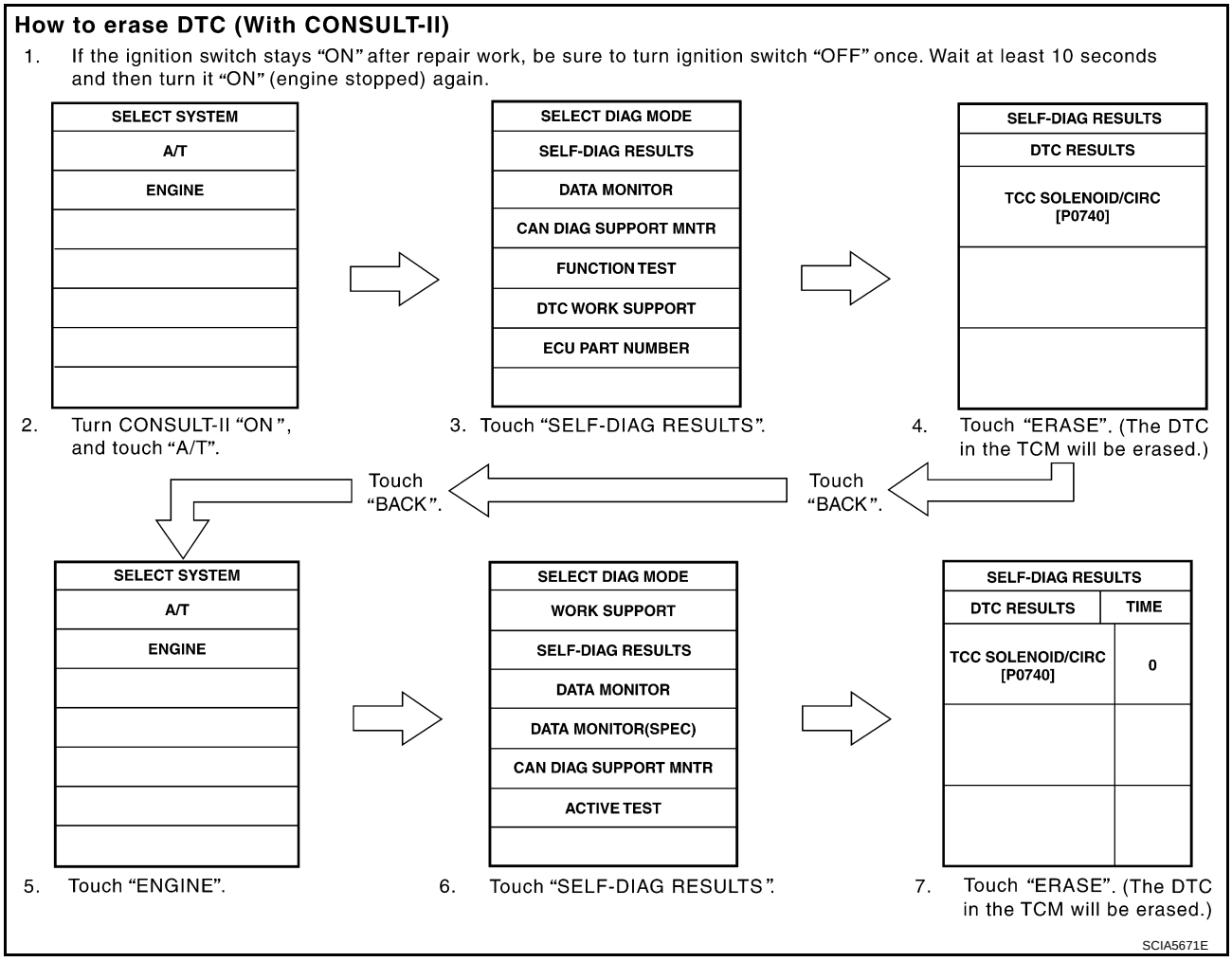

With GST

The emission related diagnostic information in the ECM can be erased by selecting Service $04 with GST.

NOTE:

If the DTC is not for A/T related items (see EC-15), skip step 2.

1. If the ignition switch stays ON after repair work, be sure to turn ignition switch OFF once. Wait at least 10 seconds and then turn it ON (engine stopped) again.

2. Perform AT-42 . (The DTC in TCM will be erased.)
3. Select Service $04 with GST (Generic Scan Tool).

No Tools

NOTE:
If the DTC is not for A/T related items (see EC-15), skip step 2.

1. If the ignition switch stays ON after repair work, be sure to turn ignition switch OFF once.
   Wait at least 10 seconds and then turn it ON (engine stopped) again.
2. Perform AT-42 . (The DTC in TCM will be erased.)
3. Change the diagnostic test mode from Mode II to Mode I by depressing the accelerator pedal. Refer to EC-70, "HOW TO SWITCH DIAGNOSTIC TEST MODE" .

- **If the battery is disconnected, the emission-related diagnostic information will be lost within 24 hours.**
- **The following data are cleared when the ECM memory is erased.**
  - Diagnostic trouble codes
  - 1st trip diagnostic trouble codes
  - Freeze frame data
  - 1st trip freeze frame data
  - System readiness test (SRT) codes
  - Test values

Actual work procedures are explained using a DTC as an example. Be careful so that not only the DTC, but all of the data listed above, are cleared from the ECM memory during work procedures.

Malfunction Indicator Lamp (MIL)

ABS006KM

DESCRIPTION

The MIL is located on the instrument panel.

1. The MIL will light up when the ignition switch is turned ON without the engine running. This is a bulb check.
   If the MIL does not light up, refer to DI-42, "WARNING LAMPS" , or see EC-703 .
2. When the engine is started, the MIL should go off.
   If the MIL remains on, the on board diagnostic system has detected an engine system malfunction.

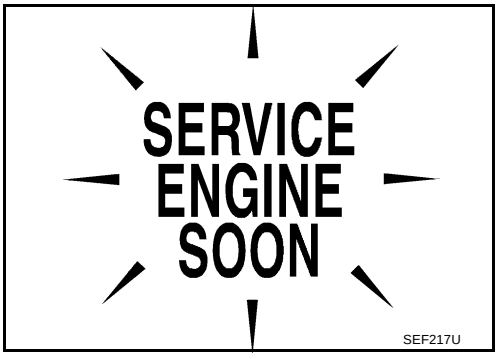

ON BOARD DIAGNOSTIC SYSTEM FUNCTION

The on board diagnostic system has the following three functions.

Diagnostic Test Mode	KEY and ENG. Status	Function	Explanation of Function
Mode I	Ignition switch in ON position  Engine stopped 	BULB CHECK	This function checks the MIL bulb for damage (blown, open circuit, etc.). If the MIL does not come on, check MIL circuit.
	Engine running 	MALFUNCTION WARNING	This is a usual driving condition. When a malfunction is detected twice in two consecutive driving cycles (two trip detection logic), the MIL will light up to inform the driver that a malfunction has been detected. The following malfunctions will light up or blink the MIL in the 1st trip. ● Misfire (Possible three way catalyst damage) ● One trip detection diagnoses
Mode II	Ignition switch in ON position  Engine stopped 	SELF-DIAGNOSTIC RESULTS	This function allows DTCs and 1st trip DTCs to be read.

When there is an open circuit on MIL circuit, the ECM cannot warn the driver by lighting up MIL when there is malfunction on engine control system.
Therefore, when electrical controlled throttle and part of ECM related diagnoses are continuously detected as NG for 5 trips, ECM warns the driver that engine control system malfunctions and MIL circuit is open by means of operating fail-safe function.
The fail-safe function also operates when above diagnoses except MIL circuit are detected and demands the driver to repair the malfunction.

Engine operating condition in fail-safe mode	Engine speed will not rise more than 2,500 rpm due to the fuel cut

MIL Flashing Without DTC

When any SRT codes are not set, MIL may flash without DTC. For the details, refer to EC-63, "How to Display SRT Status" .

HOW TO SWITCH DIAGNOSTIC TEST MODE

NOTE:

- **It is better to count the time accurately with a clock.**
- **It is impossible to switch the diagnostic mode when an accelerator pedal position sensor circuit has a malfunction.**
- **Always ECM returns to Diagnostic Test Mode I after ignition switch is turned OFF.**

How to Set Diagnostic Test Mode II (Self-Diagnostic Results)

1. Confirm that accelerator pedal is fully released, turn ignition switch ON and wait 3 seconds.
2. Repeat the following procedure quickly 5 times within 5 seconds.

a. Fully depress the accelerator pedal.
b. Fully release the accelerator pedal.

3. Wait 7 seconds, fully depress the accelerator pedal and keep it for approx. 10 seconds until the MIL starts blinking.

NOTE:
Do not release the accelerator pedal for 10 seconds if MIL may start blinking on the halfway of this 10 seconds. This blinking is displaying SRT status and is continued for another 10 seconds. For the details, refer to EC-63, "How to Display SRT Status" .

4. Fully release the accelerator pedal.
   ECM has entered to Diagnostic Test Mode II (Self-diagnostic results).

   NOTE:
   Wait until the same DTC (or 1st trip DTC) appears to confirm all DTCs certainly.

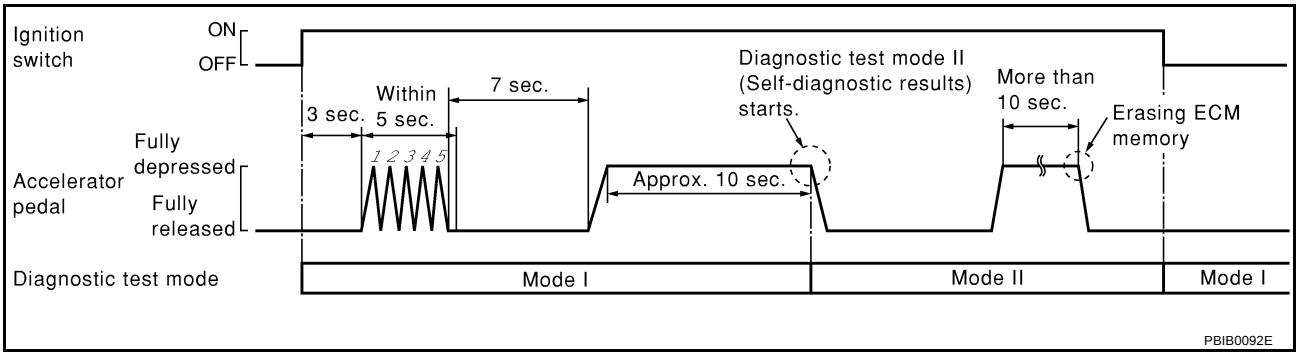

How to Erase Diagnostic Test Mode II (Self-Diagnostic Results)

1. Set ECM in Diagnostic Test Mode II (Self-diagnostic results). Refer to EC-70, "How to Set Diagnostic Test Mode II (Self-Diagnostic Results)" .
2. Fully depress the accelerator pedal and keep it for more than 10 seconds.
   The emission-related diagnostic information has been erased from the backup memory in the ECM.
3. Fully release the accelerator pedal, and confirm the DTC 0000 is displayed.

DIAGNOSTIC TEST MODE I — BULB CHECK

In this mode, the MIL on the instrument panel should stay ON. If it remains OFF, check the bulb. Refer to DI-42, "WARNING LAMPS" or see EC-703 .

DIAGNOSTIC TEST MODE I — MALFUNCTION WARNING

MIL	Condition
ON	When the malfunction is detected.
OFF	No malfunction.

This DTC number is clarified in Diagnostic Test Mode II (SELF-DIAGNOSTIC RESULTS)

DIAGNOSTIC TEST MODE II — SELF-DIAGNOSTIC RESULTS

In this mode, the DTC and 1st trip DTC are indicated by the number of blinks of the MIL as shown below.
The DTC and 1st trip DTC are displayed at the same time. If the MIL does not illuminate in diagnostic test mode I (Malfunction warning), all displayed items are 1st trip DTCs. If only one code is displayed when the MIL illuminates in diagnostic test mode II (SELF-DIAGNOSTIC RESULTS), it is a DTC; if two or more codes are displayed, they may be either DTCs or 1st trip DTCs. DTC No. is same as that of 1st trip DTC. These uniden-

tified codes can be identified by using the CONSULT-II or GST. A DTC will be used as an example for how to read a code.

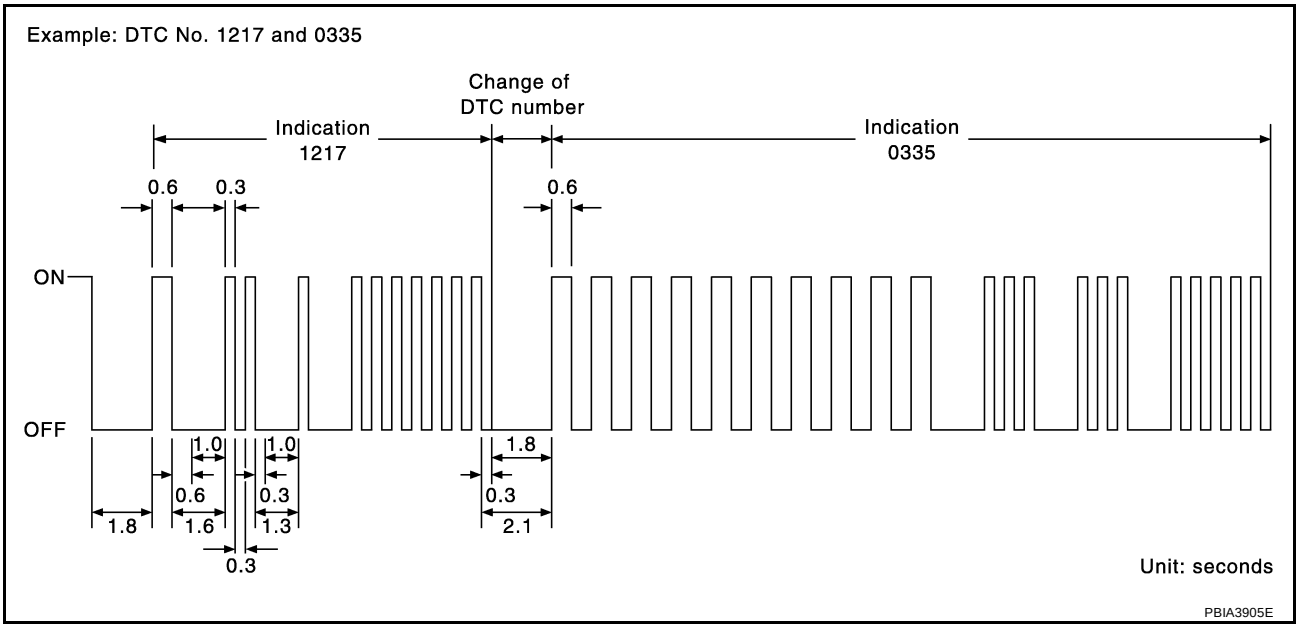

A particular trouble code can be identified by the number of four-digit numeral flashes. The “zero” is indicated by the number of ten flashes. The length of time the 1,000th-digit numeral flashes on and off is 1.2 seconds consisting of an ON (0.6-second) - OFF (0.6-second) cycle.
The 100th-digit numeral and lower digit numerals consist of a 0.3-second ON and 0.3-second OFF cycle.
A change from one digit numeral to another occurs at an interval of 1.0-second OFF. In other words, the later numeral appears on the display 1.3 seconds after the former numeral has disappeared.
A change from one trouble code to another occurs at an interval of 1.8-second OFF.
In this way, all the detected malfunctions are classified by their DTC numbers. The DTC 0000 refers to no malfunction. (See EC-15, "INDEX FOR DTC")

How to Erase Diagnostic Test Mode II (Self-diagnostic Results)

The DTC can be erased from the back up memory in the ECM by depressing accelerator pedal. Refer to EC-70, "How to Set Diagnostic Test Mode II (Self-Diagnostic Results)" .

- **If the battery is disconnected, the DTC will be lost from the backup memory within 24 hours.**
- **Be careful not to erase the stored memory before starting trouble diagnoses.**

OBD System Operation Chart

ABS006KN

RELATIONSHIP BETWEEN MIL, 1ST TRIP DTC, DTC, AND DETECTABLE ITEMS

- When a malfunction is detected for the 1st time, the 1st trip DTC and the 1st trip freeze frame data are stored in the ECM memory.
- When the same malfunction is detected in two consecutive trips, the DTC and the freeze frame data are stored in the ECM memory, and the MIL will come on. For details, refer to EC-54, "Two Trip Detection Logic" .
- The MIL will go off after the vehicle is driven 3 times (drive pattern B) with no malfunction. The drive is counted only when the recorded driving pattern is met (as stored in the ECM). If another malfunction occurs while counting, the counter will reset.
- The DTC and the freeze frame data will be stored until the vehicle is driven 40 times (driving pattern A) without the same malfunction recurring (except for Misfire and Fuel Injection System). For Misfire and Fuel Injection System, the DTC and freeze frame data will be stored until the vehicle is driven 80 times (driving pattern C) without the same malfunction recurring. The “TIME” in “SELF-DIAGNOSTIC RESULTS” mode of CONSULT-II will count the number of times the vehicle is driven.
- The 1st trip DTC is not displayed when the self-diagnosis results in OK for the 2nd trip.

SUMMARY CHART

Items	Fuel Injection System	Misfire	Other
MIL (goes off)	3 (pattern B)	3 (pattern B)	3 (pattern B)
DTC, Freeze Frame Data (no display)	80 (pattern C)	80 (pattern C)	40 (pattern A)
1st Trip DTC (clear)	1 (pattern C), *1	1 (pattern C), *1	1 (pattern B)
1st Trip Freeze Frame Data (clear)	*1, *2	*1, *2	1 (pattern B)

For details about patterns B and C under “Fuel Injection System” and “Misfire”, see EC-75 .
For details about patterns A and B under Other, see EC-77 .
*1: Clear timing is at the moment OK is detected.
*2: Clear timing is when the same malfunction is detected in the 2nd trip.

RELATIONSHIP BETWEEN MIL, DTC, 1ST TRIP DTC AND DRIVING PATTERNS FOR “MISFIRE ” <EXHAUST QUALITY DETERIORATION>, “FUEL INJECTION SYSTEM”

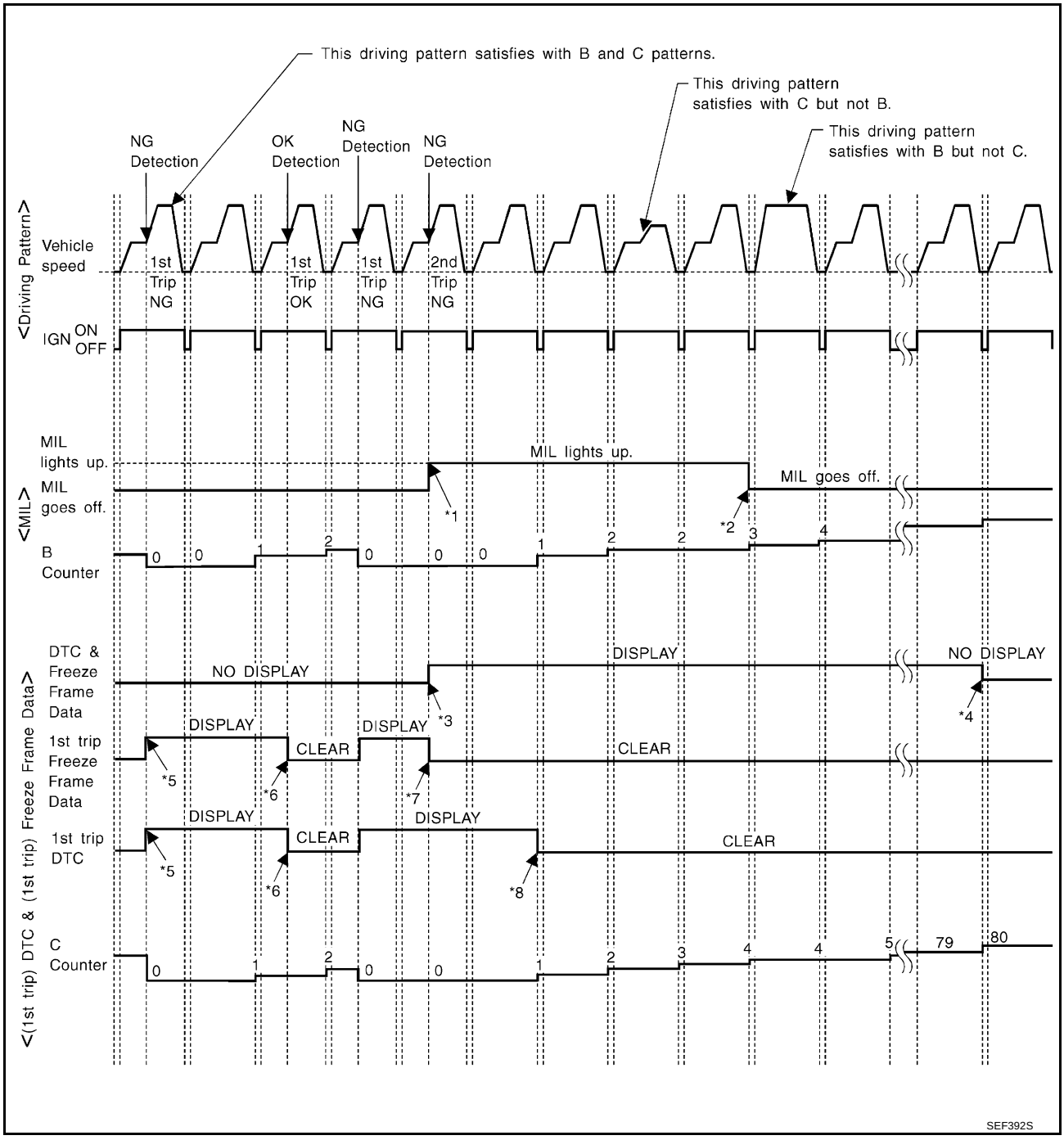

*1: When the same malfunction is detected in two consecutive trips, MIL will light up.

*2: MIL will go off after vehicle is driven 3 times (pattern B) without any malfunctions.

*3: When the same malfunction is detected in two consecutive trips, the DTC and the freeze frame data will be stored in ECM.

*4: The DTC and the freeze frame data will not be displayed any longer after vehicle is driven 80 times (pattern C) without the same malfunction. (The DTC and the freeze frame data still remain in ECM.)

*5: When a malfunction is detected for the 1st time, the 1st trip DTC and the 1st trip freeze frame data will be stored in ECM.

*6: The 1st trip DTC and the 1st trip freeze frame data will be cleared at the moment OK is detected.

*7: When the same malfunction is detected in the 2nd trip, the 1st trip freeze frame data will be cleared.

*8: 1st trip DTC will be cleared when vehicle is driven once (pattern C) without the same malfunction after DTC is stored in ECM.

EXPLANATION FOR DRIVING PATTERNS FOR “MISFIRE <EXHAUST QUALITY DETERIORATION>”, “FUEL INJECTION SYSTEM”

<Driving Pattern B>

Driving pattern B means the vehicle operation as follows:
All components and systems should be monitored at least once by the OBD system.

- The B counter will be cleared when the malfunction is detected once regardless of the driving pattern.
- The B counter will be counted up when driving pattern B is satisfied without any malfunction.
- The MIL will go off when the B counter reaches 3. (*2 in “OBD SYSTEM OPERATION CHART”)

<Driving Pattern C>

Driving pattern C means the vehicle operation as follows:
The following conditions should be satisfied at the same time:
Engine speed: (Engine speed in the freeze frame data) ±375 rpm
Calculated load value: (Calculated load value in the freeze frame data) x (1±0.1) [%]
Engine coolant temperature (T) condition:

- When the freeze frame data shows lower than 70°C (158°F), T should be lower than 70°C (158°F).
- When the freeze frame data shows higher than or equal to 70°C (158°F), T should be higher than or equal to 70°C (158°F).

Example:
If the stored freeze frame data is as follows:
Engine speed: 850 rpm, Calculated load value: 30%, Engine coolant temperature: 80°C (176°F)
To be satisfied with driving pattern C, the vehicle should run under the following conditions:
Engine speed: 475 - 1,225 rpm, Calculated load value: 27 - 33%, Engine coolant temperature: more than 70°C (158°F)

- The C counter will be cleared when the malfunction is detected regardless of vehicle conditions above.
- The C counter will be counted up when vehicle conditions above is satisfied without the same malfunction.
- The DTC will not be displayed after C counter reaches 80.
- The 1st trip DTC will be cleared when C counter is counted once without the same malfunction after DTC is stored in ECM.

RELATIONSHIP BETWEEN MIL, DTC, 1ST TRIP DTC AND DRIVING PATTERNS EXCEPT FOR "MISFIRE <EXHAUST QUALITY DETERIORATION>", "FUEL INJECTION SYSTEM"

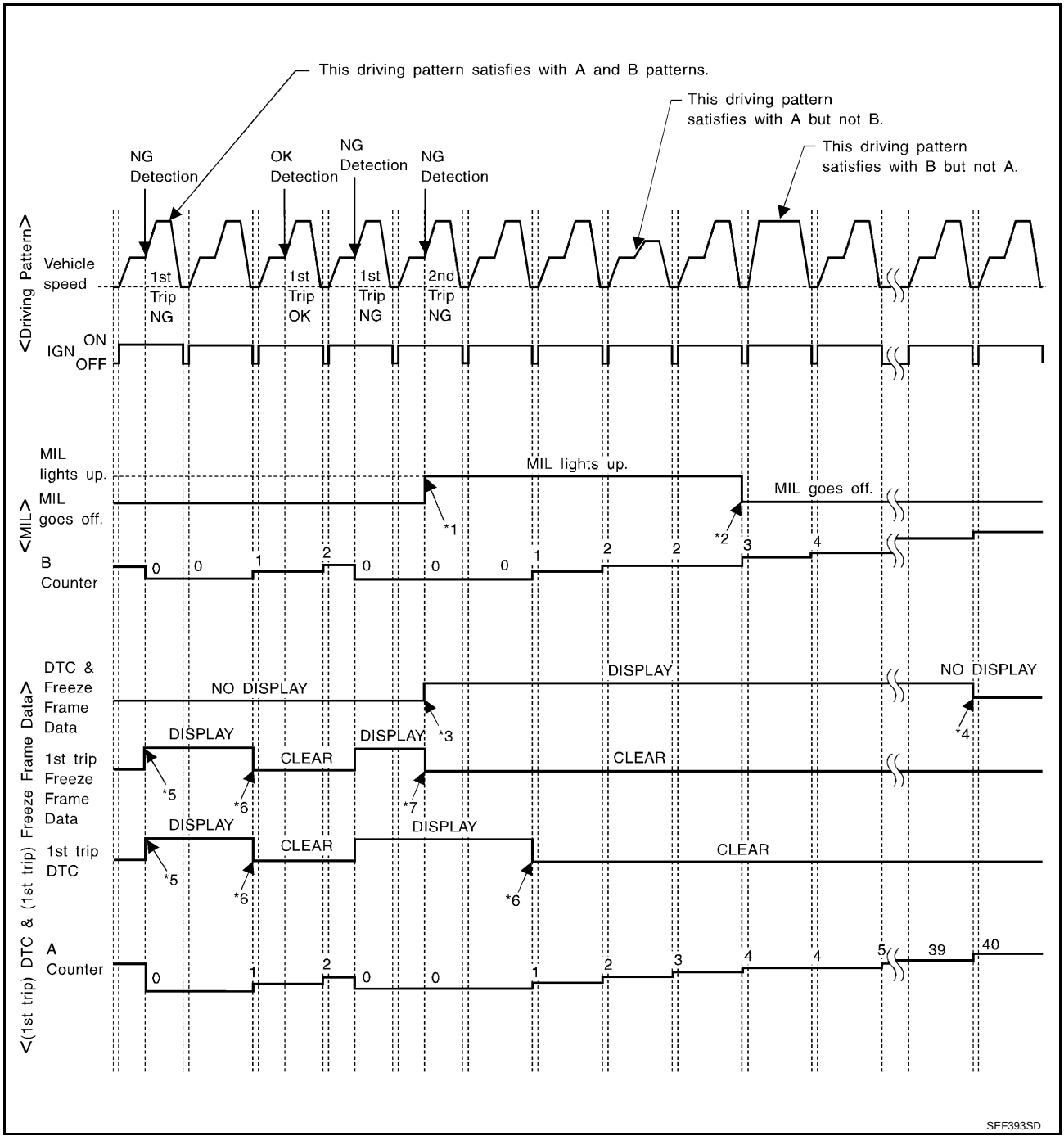

*1: When the same malfunction is detected in two consecutive trips, MIL will light up.

*2: MIL will go off after vehicle is driven 3 times (pattern B) without any malfunctions.

*3: When the same malfunction is detected in two consecutive trips, the DTC and the freeze frame data will be stored in ECM.

*4: The DTC and the freeze frame data will not be displayed any longer after vehicle is driven 40 times (pattern A) without the same malfunction. (The DTC and the freeze frame data still remain in ECM.)

*5: When a malfunction is detected for the 1st time, the 1st trip DTC and the 1st trip freeze frame data will be stored in ECM.

*6: 1st trip DTC will be cleared after vehicle is driven once (pattern B) without the same malfunction.

*7: When the same malfunction is detected in the 2nd trip, the 1st trip freeze frame data will be cleared.

EXPLANATION FOR DRIVING PATTERNS EXCEPT FOR "MISFIRE <EXHAUST QUALITY DETERIORATION>", "FUEL INJECTION SYSTEM"

<Driving Pattern A>

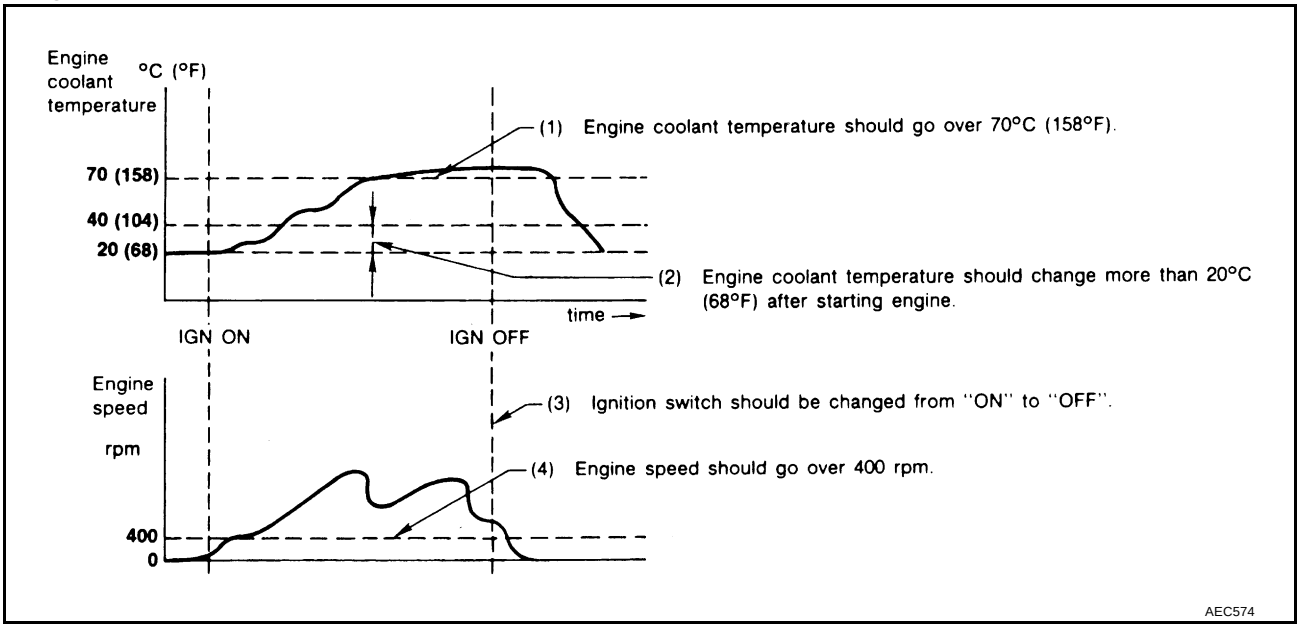

- The A counter will be cleared when the malfunction is detected regardless of (1) - (4).
- The A counter will be counted up when (1) - (4) are satisfied without the same malfunction.
- The DTC will not be displayed after the A counter reaches 40 (*2 in OBD SYSTEM OPERATION CHART).

<Driving Pattern B>

Driving pattern B means the vehicle operation as follows:
All components and systems should be monitored at least once by the OBD system.

- The B counter will be cleared when the malfunction is detected once regardless of the driving pattern.
- The B counter will be counted up when driving pattern B is satisfied without any malfunctions.
- The MIL will go off when the B counter reaches 3 (*2 in OBD SYSTEM OPERATION CHART).

BASIC SERVICE PROCEDURE

PFP:00018

Basic Inspection

ABS006KR

1. INSPECTION START

1. Check service records for any recent repairs that may indicate a related malfunction, or a current need for scheduled maintenance.
2. Open engine hood and check the following:
- Harness connectors for improper connections
- Wiring harness for improper connections, pinches and cut
- Vacuum hoses for splits, kinks and improper connections
- Hoses and ducts for leaks
- Air cleaner clogging
- Gasket
3. Confirm that electrical or mechanical loads are not applied.
- Headlamp switch is OFF.
- Air conditioner switch is OFF.
- Rear window defogger switch is OFF.
- Steering wheel is in the straight-ahead position, etc.
4. Start engine and warm it up until engine coolant temperature indicator points the middle of gauge.
   Ensure engine stays below 1,000 rpm.

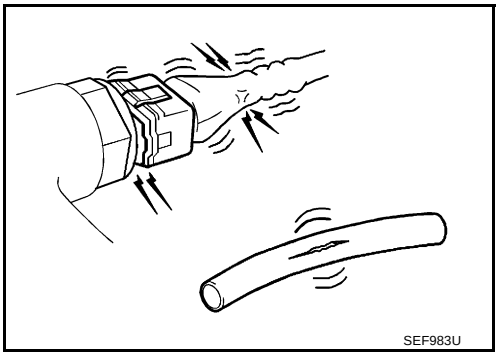
SEF983U

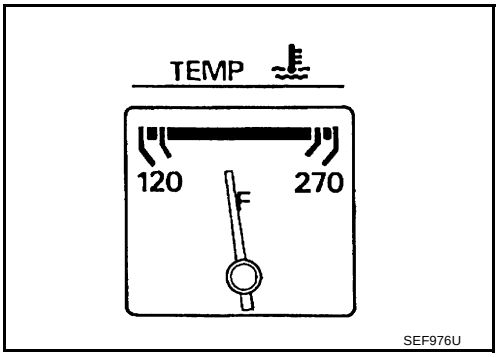

SEF976U

5. Run engine at about 2,000 rpm for about 2 minutes under no-load.
6. Make sure that no DTC is displayed with CONSULT-II or GST.

OK or NG

OK >> GO TO 3.
NG >> GO TO 2.

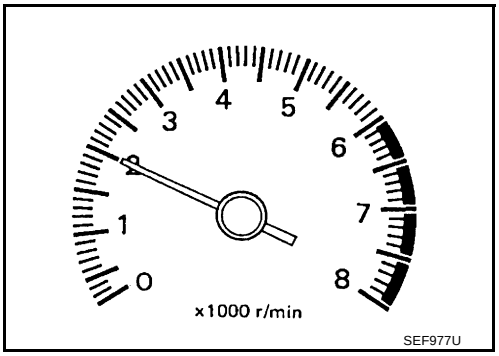

SEF977U

2. REPAIR OR REPLACE

Repair or replace components as necessary according to corresponding Diagnostic Procedure.

>> GO TO 3.

3. CHECK TARGET IDLE SPEED

With CONSULT-II

1. Run engine at about 2,000 rpm for about 2 minutes under no-load.
2. Rev engine (2,000 to 3,000 rpm) 2 or 3 times under no-load, then run engine at idle speed for about 1 minute.

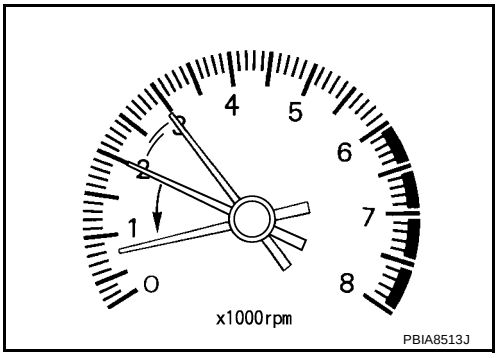

3. Read idle speed in “DATA MONITOR” mode with CONSULT-II.
   Refer to EC-83, "IDLE SPEED" .

   650 ± 50 rpm (in P or N position)

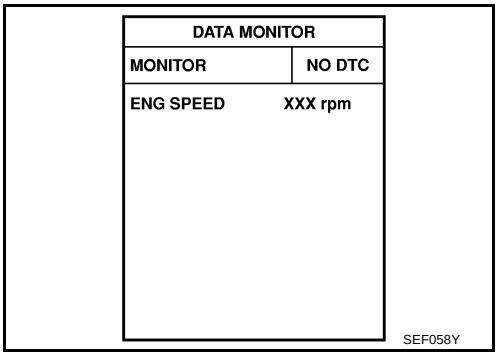

Without CONSULT-II

1. Run engine at about 2,000 rpm for about 2 minutes under no-load.
2. Rev engine (2,000 to 3,000 rpm) 2 or 3 times under no-load, then run engine at idle speed for about 1 minute.
3. Check idle speed.
   Refer to EC-83, "IDLE SPEED" .

   650 ± 50 rpm (in P or N position)

OK or NG

OK >> GO TO 9.
NG >> GO TO 4.

4. PERFORM ACCELERATOR PEDAL RELEASED POSITION LEARNING

1. Stop engine.
2. Perform EC-96, "Accelerator Pedal Released Position Learning" .

>> GO TO 5.

5. PERFORM THROTTLE VALVE CLOSED POSITION LEARNING

Perform EC-96, "Throttle Valve Closed Position Learning" .

>> GO TO 6.

6. PERFORM IDLE AIR VOLUME LEARNING

Refer to EC-97, "Idle Air Volume Learning" .

Is Idle Air Volume Learning carried out successfully?

Yes or No

Yes >> GO TO 7.
No >> 1. Follow the instruction of Idle Air Volume Learning.
2. GO TO 4.

7. CHECK TARGET IDLE SPEED AGAIN

With CONSULT-II

1. Start engine and warm it up to normal operating temperature.
2. Read idle speed in “DATA MONITOR” mode with CONSULT-II. Refer to EC-83, "IDLE SPEED" .

650 ± 50 rpm (in P or N position)

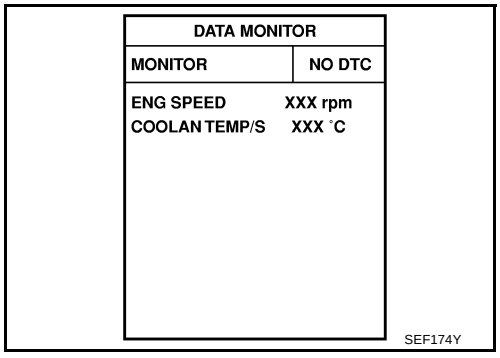

Without CONSULT-II

1. Start engine and warm it up to normal operating temperature.
2. Check idle speed. Refer to EC-83, "IDLE SPEED" .

650 ± 50 rpm (in P or N position)

OK or NG

OK >> GO TO 10.
NG >> GO TO 8.

8. DETECT MALFUNCTIONING PART

Check the following.

- Check camshaft position sensor (PHASE) and circuit. Refer to EC-307 .
- Check crankshaft position sensor (POS) and circuit. Refer to EC-300 .

OK or NG

OK >> GO TO 9.
NG >> 1. Repair or replace.
2. GO TO 4.

9. CHECK ECM FUNCTION

1. Substitute another known-good ECM to check ECM function. (ECM may be the cause of an incident, but this is a rare case.)
2. Perform initialization of IVIS (NATS) system and registration of all IVIS (NATS) ignition key IDs. Refer to EC-53, "IVIS (INFINITI VEHICLE IMMOBILIZER SYSTEM-NATS)" .

>> GO TO 4.

10. CHECK IGNITION TIMING

1. Run engine at idle.
2. Check ignition timing with a timing light.
   Refer to EC-83, "IGNITION TIMING" .

15 ± 5° BTDC (in P or N position)

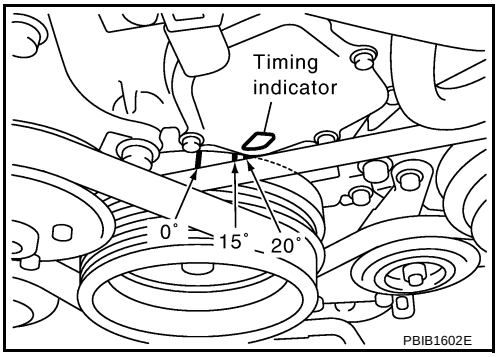

OK or NG

OK >> GO TO 19.
NG >> GO TO 11.

11. PERFORM ACCELERATOR PEDAL RELEASED POSITION LEARNING

1. Stop engine.
2. Perform EC-96, "Accelerator Pedal Released Position Learning" .

>> GO TO 12.

12. PERFORM THROTTLE VALVE CLOSED POSITION LEARNING

Perform EC-96, "Throttle Valve Closed Position Learning" .

>> GO TO 13.

13. PERFORM IDLE AIR VOLUME LEARNING

Refer to EC-97, "Idle Air Volume Learning" .
Is Idle Air Volume Learning carried out successfully?

Yes or No

Yes >> GO TO 14.
No >> 1. Follow the instruction of Idle Air Volume Learning.
2. GO TO 4.

14. CHECK TARGET IDLE SPEED AGAIN

With CONSULT-II

1. Start engine and warm it up to normal operating temperature.
2. Read idle speed in “DATA MONITOR” mode with CONSULT-II.
   Refer to EC-83, "IDLE SPEED" .

650 ± 50 rpm (in P or N position)

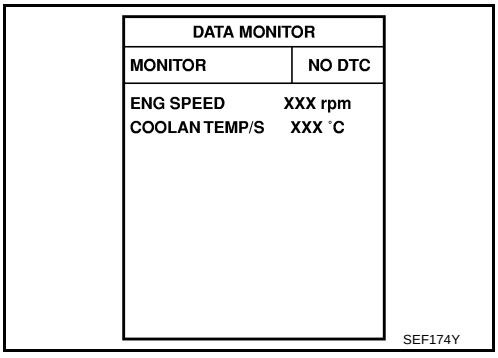

Without CONSULT-II

1. Start engine and warm it up to normal operating temperature.
2. Check idle speed.
   Refer to EC-83, "IDLE SPEED" .

650 ± 50 rpm (in P or N position)

OK or NG

OK >> GO TO 15.
NG >> GO TO 17.

15. CHECK IGNITION TIMING AGAIN

1. Run engine at idle.
2. Check ignition timing with a timing light.
   Refer to EC-83, "IGNITION TIMING" .

15 ± 5° BTDC (in P or N position)

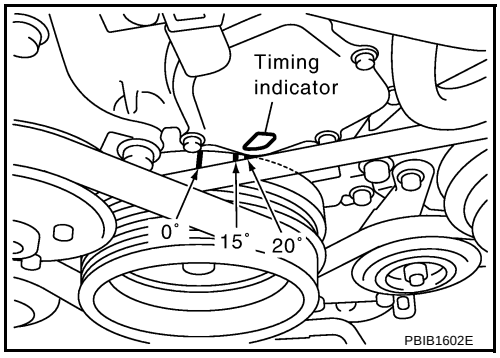

OK or NG

OK >> GO TO 19.
NG >> GO TO 16.

16. CHECK TIMING CHAIN INSTALLATION

Check timing chain installation. Refer to EM-64, "TIMING CHAIN" .

OK or NG

OK >> GO TO 17.
NG >> 1. Repair the timing chain installation.
2. GO TO 4.

17. DETECT MALFUNCTIONING PART

Check the following.

- Check camshaft position sensor (PHASE) and circuit. Refer to EC-307 .
- Check crankshaft position sensor (POS) and circuit. Refer to EC-300 .

OK or NG

OK >> GO TO 18.
NG >> 1. Repair or replace.
2. GO TO 4.

18. CHECK ECM FUNCTION

1. Substitute another known-good ECM to check ECM function. (ECM may be the cause of an incident, but this is a rare case.)
2. Perform initialization of IVIS (NATS) system and registration of all IVIS (NATS) ignition key IDs. Refer to EC-53, "IVIS (INFINITI VEHICLE IMMOBILIZER SYSTEM-NATS)" .

>> GO TO 4.

19. INSPECTION END

Did you replace the ECM, referring this Basic Inspection procedure?

Yes or No

Yes >> 1. Perform EC-96, "VIN Registration" .
2. **INSPECTION END**
No >> **INSPECTION END**

Idle Speed and Ignition Timing Check

ABS006KC

IDLE SPEED

With CONSULT-II

Check idle speed in “DATA MONITOR” mode with CONSULT-II.

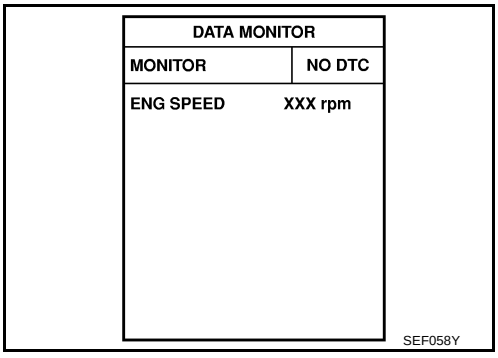

With GST

Check idle speed with Service $01 GST.

IGNITION TIMING

Any of following two methods may be used.

Method A

1. Attach timing light to loop wire as shown.

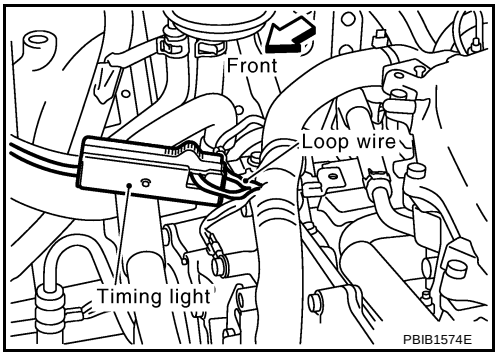

2. Check ignition timing.

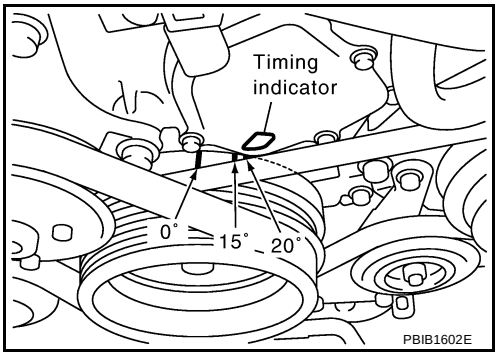

Method B

1. Remove No. 1 ignition coil.

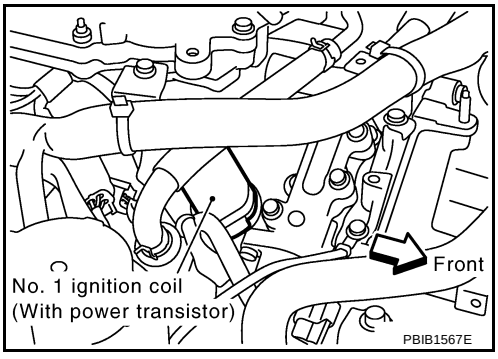

2. Connect No. 1 ignition coil and No. 1 spark plug with suitable high-tension wire as shown, and attach timing light clamp to this wire.

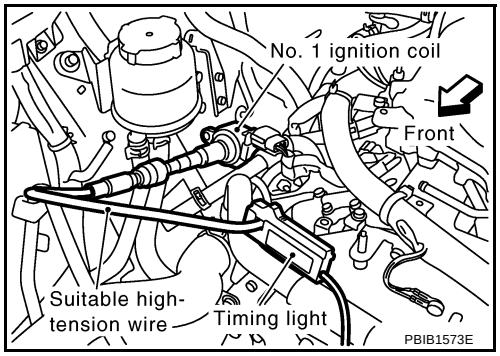

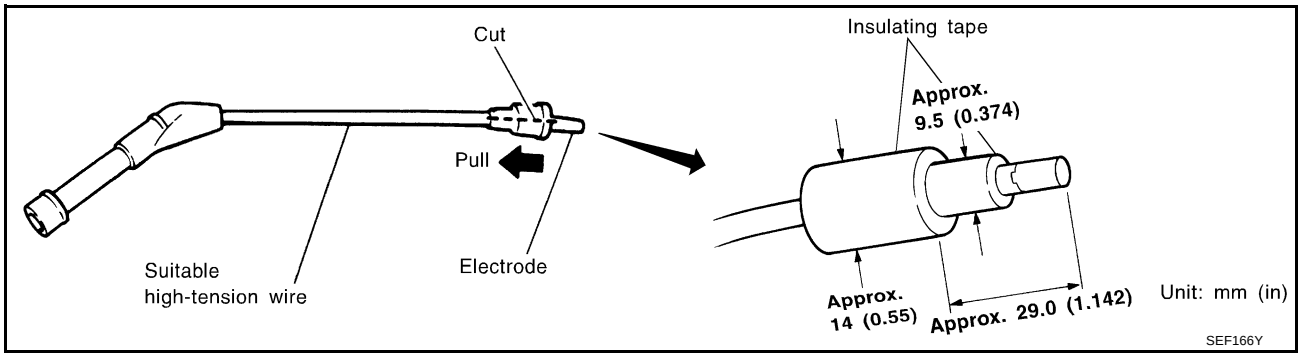

3. Check ignition timing.

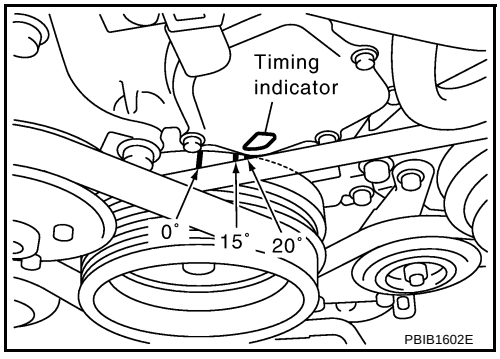

Idle Mixture Ratio Adjustment

ABS00E91

PREPARATION

1. Make sure that the following parts are in good order.
   - Battery
   - Ignition system
   - Engine oil and coolant levels
   - Fuses
   - ECM harness connector
   - Vacuum hoses
   - Air intake system
     (Oil filler cap, oil level gauge, etc.)
   - Fuel pressure
   - Engine compression
   - Throttle valve
   - Evaporative emission system
2. On air conditioner equipped models, checks should be carried out while the air conditioner is OFF.
3. On automatic transmission equipped models, when checking idle rpm, ignition timing and mixture ratio, checks should be carried out while selector lever is in P or N position.
4. When measuring CO percentage, insert probe more than 40 cm (15.7 in) into tail pipe.
5. Turn OFF headlamp, heater blower, rear window defogger.
6. Keep front wheels pointed straight ahead.

OVERALL SEQUENCE

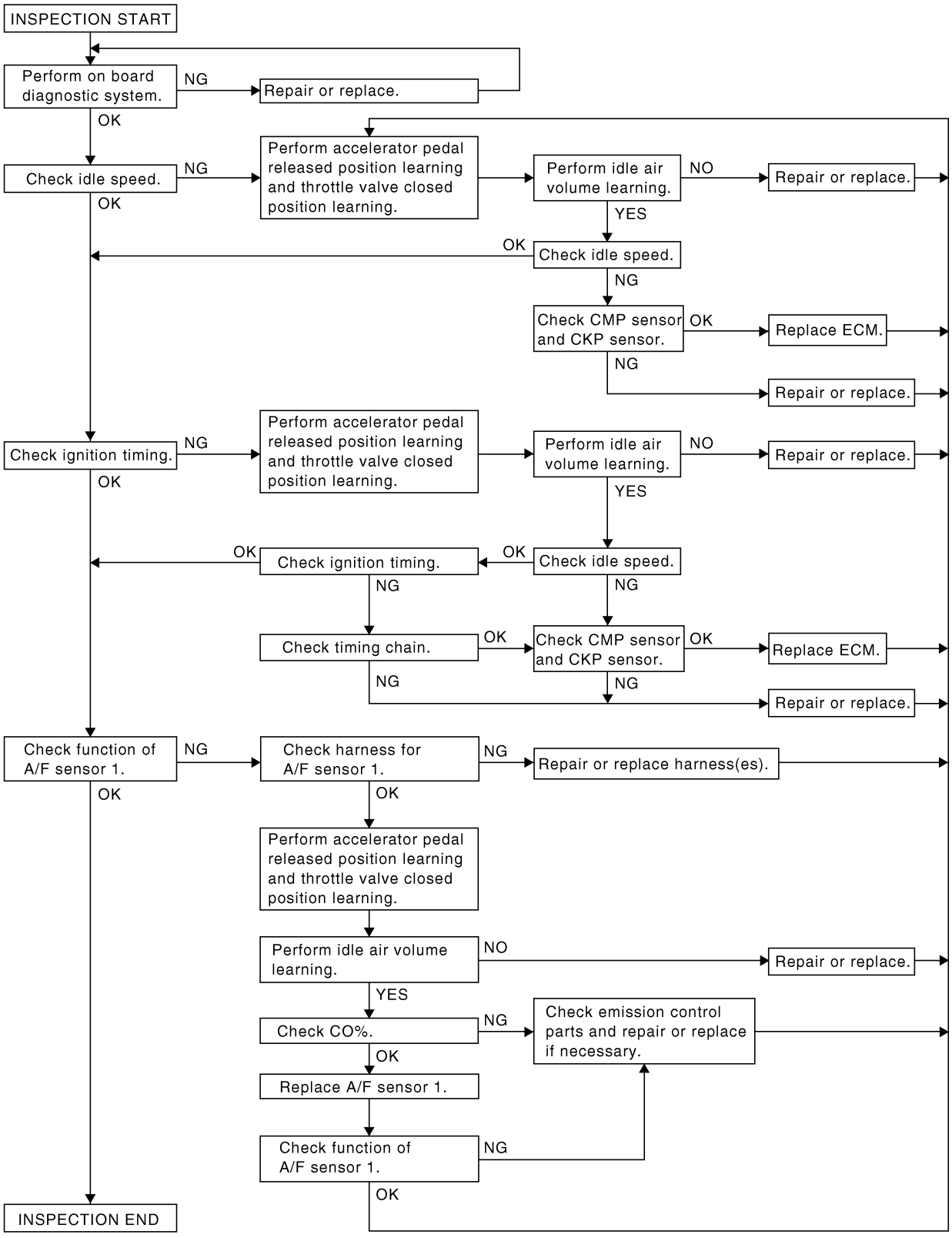

NOTE:
If a vehicle contains a part which is operating outside of design specifications with no MIL illumination, the part shall not be replaced prior to emission testing unless it is determined that the part has been tampered with or abused in such a way that the diagnostic system cannot reasonably be expected to detect the resulting malfunction.

PBIB2086E

DETAILED PROCEDURE

1. INSPECTION START

1. Check service records for any recent repairs that may indicate a related malfunction, or a current need for scheduled maintenance.
2. Open engine hood and check the following:
- Harness connectors for improper connections
- Wiring harness for improper connections, pinches and cut
- Vacuum hoses for splits, kinks and improper connections
- Hoses and ducts for leaks
- Air cleaner clogging
- Gasket
3. Confirm that electrical or mechanical loads are not applied.
- Head lamp switch is OFF.
- Air conditioner switch is OFF.
- Rear window defogger switch is OFF.
- Steering wheel is in the straight-ahead position, etc.

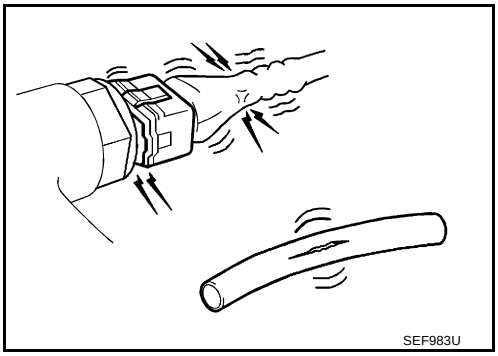

4. Start engine and warm it up until engine coolant temperature indicator points the middle of gauge.
   Ensure engine stays below 1,000 rpm.

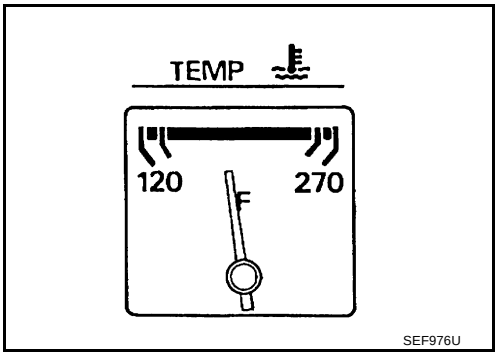

5. Run engine at about 2,000 rpm for about 2 minutes under no-load.
6. Make sure that no DTC is displayed with CONSULT-II or GST.

<u>OK or NG</u>

OK >> GO TO 3.
NG >> GO TO 2.

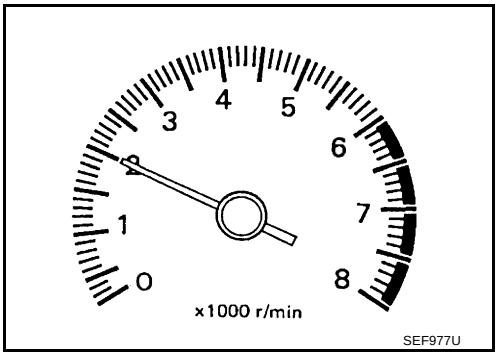

2. REPAIR OR REPLACE

Repair or replace components as necessary according to corresponding Diagnostic Procedure.

>> GO TO 3.

3. CHECK TARGET IDLE SPEED

With CONSULT-II

1. Run engine at about 2,000 rpm for about 2 minutes under no-load.
2. Rev engine (2,000 to 3,000 rpm) 2 or 3 times under no-load, then run engine at idle speed for about 1 minute.

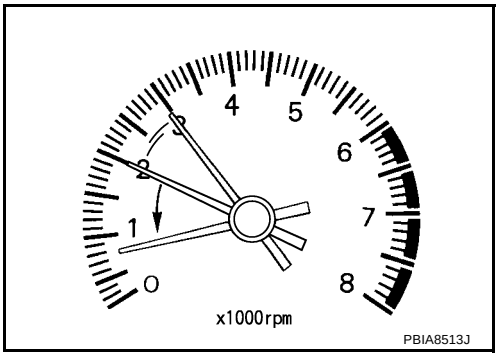

3. Read idle speed in “DATA MONITOR” mode with CONSULT-II. Refer to EC-83, "IDLE SPEED" .

   650 ± 50 rpm (in P or N position)

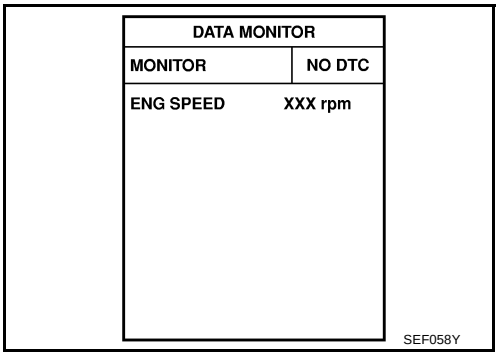

Without CONSULT-II

1. Run engine at about 2,000 rpm for about 2 minutes under no-load.
2. Rev engine (2,000 to 3,000 rpm) 2 or 3 times under no-load, then run engine at idle speed for about 1 minute.
3. Check idle speed. Refer to EC-83, "IDLE SPEED" .

   650 ± 50 rpm (in P or N position)

OK or NG

OK >> GO TO 10.
NG >> GO TO 4.

4. PERFORM ACCELERATOR PEDAL RELEASED POSITION LEARNING

1. Stop engine.
2. Perform EC-96, "Accelerator Pedal Released Position Learning" .

>> GO TO 5.

5. PERFORM THROTTLE VALVE CLOSED POSITION LEARNING

Perform EC-96, "Throttle Valve Closed Position Learning" .

>> GO TO 6.

6. PERFORM IDLE AIR VOLUME LEARNING

Perform EC-97, "Idle Air Volume Learning" .

Is Idle Air Volume Learning carried out successfully?

Yes or No

Yes >> GO TO 7.

No >> 1. Follow the instruction of Idle Air Volume Learning.
2. GO TO 4.

7. CHECK TARGET IDLE SPEED AGAIN

With CONSULT-II

1. Start engine and warm it up to normal operating temperature.
2. Read idle speed in “DATA MONITOR” mode with CONSULT-II. Refer to EC-83, "IDLE SPEED" .

650 ± 50 rpm (in P or N position)

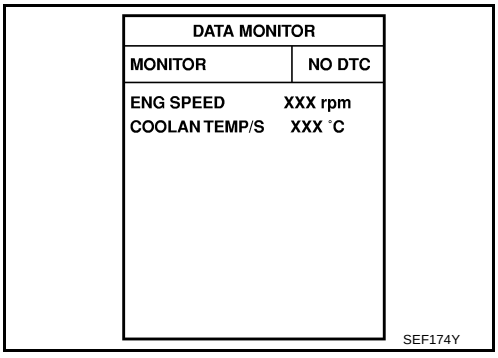

Without CONSULT-II

1. Start engine and warm it up to normal operating temperature.
2. Check idle speed. Refer to EC-83, "IDLE SPEED" .

650 ± 50 rpm (in P or N position)

OK or NG

OK >> GO TO 10.

NG >> GO TO 8.

8. DETECT MALFUNCTIONING PART

Check the following.

- Check camshaft position sensor (PHASE) and circuit. Refer to EC-307, "DTC P0340, P0345 CMP SENSOR (PHASE)" .
- Check crankshaft position sensor (POS) and circuit. Refer to EC-300, "DTC P0335 CKP SENSOR (POS)" .

OK or NG

OK >> GO TO 9.

NG >> 1. Repair or replace.
2. GO TO 4.

9. CHECK ECM FUNCTION

1. Substitute another known-good ECM to check ECM function. (ECM may be the cause of an incident, but this is a rare case.)
2. Perform initialization of IVIS (NATS) system and registration of all IVIS (NATS) ignition key IDs. Refer to BL-215, "ECM Re-Communicating Function" .

>> GO TO 4.

10. CHECK IGNITION TIMING

1. Run engine at idle.
2. Check ignition timing with a timing light. Refer to EC-83, "IGNITION TIMING" .

15 ± 5° BTDC (in P or N position)

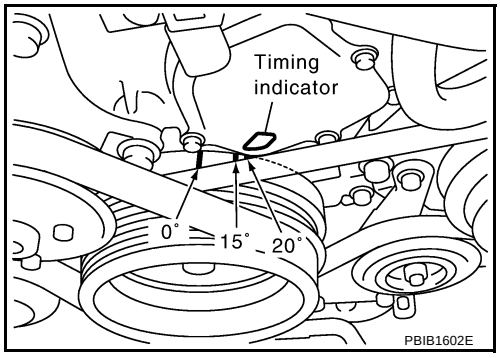

OK or NG

OK (With CONSULT-II)>>GO TO 19.
OK (With GST)>>GO TO 20.
NG >> GO TO 11.

11. PERFORM ACCELERATOR PEDAL RELEASED POSITION LEARNING

1. Stop engine.
2. Perform EC-96, "Accelerator Pedal Released Position Learning" .

>> GO TO 12.

12. PERFORM THROTTLE VALVE CLOSED POSITION LEARNING

Perform EC-96, "Throttle Valve Closed Position Learning" .

>> GO TO 13.

13. PERFORM IDLE AIR VOLUME LEARNING

Perform EC-97, "Idle Air Volume Learning" .
Is Idle Air Volume Learning carried out successfully?

Yes or No

Yes >> GO TO 14.
No >> 1. Follow the instruction of Idle Air Volume Learning.
2. GO TO 4.

14. CHECK TARGET IDLE SPEED AGAIN

With CONSULT-II

1. Start engine and warm it up to normal operating temperature.
2. Read idle speed in “DATA MONITOR” mode with CONSULT-II. Refer to EC-83, "IDLE SPEED" .

650 ± 50 rpm (in P or N position)

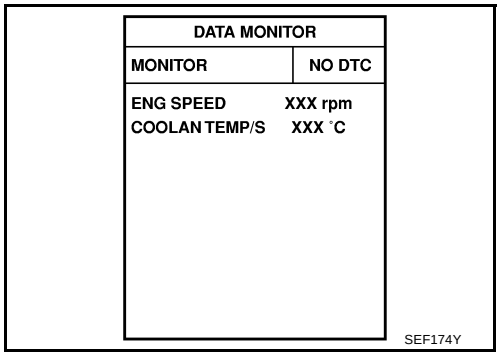

Without CONSULT-II

1. Start engine and warm it up to normal operating temperature.
2. Check idle speed. Refer to EC-83, "IDLE SPEED" .

650 ± 50 rpm (in P or N position)

OK or NG

OK >> GO TO 15.
NG >> GO TO 17.

15. CHECK IGNITION TIMING AGAIN

1. Run engine at idle.
2. Check ignition timing with a timing light. Refer to EC-83, "IGNITION TIMING" .

15 ± 5° BTDC (in P or N position)

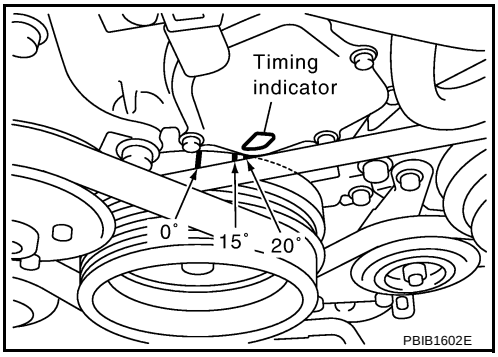

OK or NG

OK (With CONSULT-II)>>GO TO 19.
OK (With GST)>>GO TO 20.
NG >> GO TO 16.

16. CHECK TIMING CHAIN INSTALLATION

Check timing chain installation. Refer to EM-64, "TIMING CHAIN" .

OK or NG

OK >> GO TO 17.
NG >> 1. Repair the timing chain installation.
2. GO TO 4.

17. DETECT MALFUNCTIONING PART

Check the following.

- Check camshaft position sensor (PHASE) and circuit. Refer to EC-307, "DTC P0340, P0345 CMP SENSOR (PHASE)" .
- Check crankshaft position sensor (POS) and circuit. Refer to EC-300, "DTC P0335 CKP SENSOR (POS)" .

OK or NG

OK >> GO TO 18.
NG >> 1. Repair or replace.
2. GO TO 4.

18. CHECK ECM FUNCTION

1. Substitute another known-good ECM to check ECM function. (ECM may be the cause of an incident, but this is a rare case.)
2. Perform initialization of IVIS (NATS) system and registration of all IVIS (NATS) ignition key IDs. Refer to BL-215, "ECM Re-Communicating Function" .

>> GO TO 4.

19. CHECK AIR FUEL RATIO (A/F) SENSOR 1 FUNCTION

With CONSULT-II

1. Turn ignition switch OFF and wait at a least 10 seconds.
2. Start engine and warm it up to normal operating temperature.
3. Drive the vehicle at a speed of 80 km/h (50 MPH) for a few minutes in D position with “OD” OFF.
   NOTE:
   Keep the accelerator pedal as steady as possible during the cruising.
4. Then release the accelerator pedal fully until the vehicle speed decreases to 50 km/h (30 MPH).
   NOTE:
   Never apply brake during releasing the accelerator pedal.
5. Repeat steps 3 to 4 for 5 times.
6. Stop the vehicle and connect CONSULT-II to the vehicle.
7. Make sure that no (1st trip) DTC is displayed in “SELF-DIAG RESULTS” mode.

OK or NG

OK >> **INSPECTION END**
NG >> GO TO 21.

20. CHECK AIR FUEL RATIO (A/F) SENSOR 1 FUNCTION

With GST

1. Turn ignition switch OFF and wait at a least 10 seconds.
2. Start engine and warm it up to normal operating temperature.
3. Drive the vehicle at a speed of 80 km/h (50 MPH) for a few minutes in D position with “OD” OFF.
   NOTE:
   Keep the accelerator pedal as steady as possible during the cruising.
4. Then release the accelerator pedal fully until the vehicle speed decreases to 50 km/h (30 MPH).
   NOTE:
   Never apply brake during releasing the accelerator pedal.
5. Repeat steps 3 to 4 for 5 times.
6. Stop the vehicle and connect GST to the vehicle.
7. Make sure that no (1st trip) DTC is displayed.

OK or NG

OK >> **INSPECTION END**
NG >> GO TO 21.

21. CHECK AIR FUEL RATIO (A/F) SENSOR 1 HARNESS

1. Turn ignition switch OFF and disconnect battery ground cable.
2. Disconnect ECM harness connector.
3. Disconnect A/F sensor 1 harness connector.
4. Check harness continuity between the following terminals. Refer to EC-490, "Wiring Diagram" .

	A/F sensor 1 terminal	ECM terminal
Bank 1	1	16
	2	75
	5	35
	6	56
Bank 2	1	76
	2	77
	5	57
	6	58

Continuity should exist.

5. Also check harness for short to ground and short to power.

OK or NG

OK >> GO TO 22.
NG >> 1. Repair open circuit or short to ground or short to power in harness or connectors between ECM and A/F sensor 1.
2. GO TO 4.

22. PERFORM ACCELERATOR PEDAL RELEASED POSITION LEARNING

1. Reconnect ECM harness connector.
2. Perform EC-96, "Accelerator Pedal Released Position Learning" .

>> GO TO 23.

23. PERFORM THROTTLE VALVE CLOSED POSITION LEARNING

Perform EC-96, "Throttle Valve Closed Position Learning" .

>> GO TO 24.

24. PERFORM IDLE AIR VOLUME LEARNING

Refer to EC-97, "Idle Air Volume Learning" .

Is Idle Air Volume Learning carried out successfully?

Yes or No

Yes (With CONSULT-II)>>GO TO 25.
Yes (Without CONSULT-II)>>GO TO 26.
No >> 1. Follow the instruction of Idle Air Volume Learning.
2. GO TO 4.

25. CHECK CO%

With CONSULT-II

1. Start engine and warm it up until engine coolant temperature indicator points the middle of gauge.
2. Turn ignition switch OFF, wait at least 10 seconds and then turn ON.
3. Select “ENG COOLANT TEMP” in “ACTIVE TEST” mode.
4. Set “ENG COOLANT TEMP” to 5°C (41°F) by touching “DOWN” and “Qd”.
5. Start engine and rev it (2,000 to 3,000 rpm) 2 or 3 times under no load, then run engine at idle speed.
6. Check CO%.

Idle CO: 0.7 – 9.9% and engine runs smoothly.

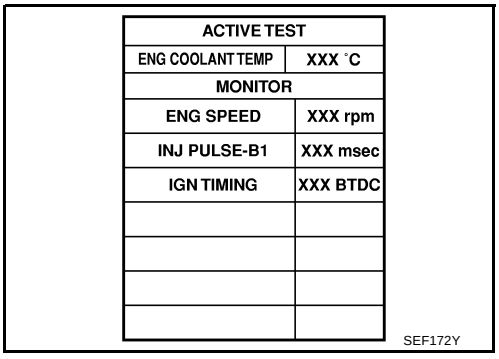

ACTIVE TEST	
ENG COOLANT TEMP	XXX °C
MONITOR	
ENG SPEED	XXX rpm
INJ PULSE-B1	XXX msec
IGN TIMING	XXX BTDC

SEF172Y

OK or NG

OK >> GO TO 28.
NG >> GO TO 27.

26. CHECK CO%

Without CONSULT-II

1. Start engine and warm it up until engine coolant temperature indicator points to the middle of gauge.
2. Turn ignition switch OFF.
3. Disconnect engine coolant temperature sensor harness connector.
4. Connect a resistor (4.4 kΩ) between terminals of engine coolant temperature sensor harness connector.
5. Start engine and rev it (2,000 to 3,000 rpm) 2 or 3 times under no load, then run engine at idle speed.
6. Check CO%.

Idle CO: 0.7 – 9.9% and engine runs smoothly.

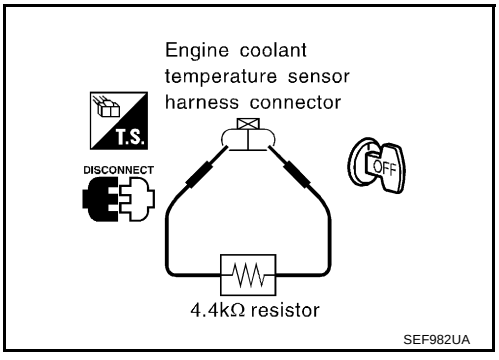

SEF982UA

7. After checking CO%, turn ignition switch OFF, disconnect the resistor from the terminals of engine coolant temperature sensor harness connector, and then connect engine coolant temperature sensor harness connector to engine coolant temperature sensor.

OK or NG

OK >> GO TO 28.
NG >> GO TO 27.

27. RECONNECT AIR FUEL RATIO (A/F) SENSOR 1 HARNESS CONNECTOR

1. Turn ignition switch OFF.
2. Reconnect A/F sensor 1 harness connector.

>> GO TO 31.

28. REPLACE AIR FUEL RATIO (A/F) SENSOR 1

1. Stop engine.
2. Replace A/F sensor 1 on the malfunctioning bank.

With CONSULT-II>>GO TO 29.
With GST>>GO TO 30.

29. CHECK AIR FUEL RATIO (A/F) SENSOR 1 FUNCTION

With CONSULT-II

1. Turn ignition switch OFF and wait at a least 10 seconds.
2. Start engine and warm it up to normal operating temperature.
3. Drive the vehicle at a speed of 80 km/h (50 MPH) for a few minutes in D position with “OD” OFF.
   NOTE:
   Keep the accelerator pedal as steady as possible during the cruising.
4. Then release the accelerator pedal fully until the vehicle speed decreases to 50 km/h (30 MPH).
   NOTE:
   Never apply brake during releasing the accelerator pedal.
5. Repeat steps 3 to 4 for 5 times.
6. Stop the vehicle and connect CONSULT-II to the vehicle.
7. Make sure that no (1st trip) DTC is displayed in “SELF-DIAG RESULTS” mode.

OK or NG

OK >> GO TO 4.
NG >> GO TO 31.

30. CHECK AIR FUEL RATIO (A/F) SENSOR 1 FUNCTION

With GST

1. Turn ignition switch OFF and wait at a least 10 seconds.
2. Start engine and warm it up to normal operating temperature.
3. Drive the vehicle at a speed of 80 km/h (50 MPH) for a few minutes in D position with “OD” OFF.
   NOTE:
   Keep the accelerator pedal as steady as possible during the cruising.
4. Then release the accelerator pedal fully until the vehicle speed decreases to 50 km/h (30 MPH).
   NOTE:
   Never apply brake during releasing the accelerator pedal.
5. Repeat steps 3 to 4 for 5 times.
6. Stop the vehicle and connect GST to the vehicle.
7. Make sure that no (1st trip) DTC is displayed.

OK or NG

OK >> GO TO 4.
NG >> GO TO 31.

31. DETECT MALFUNCTIONING PART

Check the following.

- Check fuel pressure regulator, and repair or replace if necessary. Refer to EC-99, "Fuel Pressure Check" .
- Check mass air flow sensor and its circuit, and repair or replace if necessary. Refer to EC-186, "DTC P0101 MAF SENSOR" and EC-195, "DTC P0102, P0103 MAF SENSOR" .
- Check injector and its circuit, and repair or replace if necessary. Refer to EC-661, "INJECTOR CIRCUIT" .
- Check engine coolant temperature sensor and its circuit, and repair or replace if necessary. Refer to EC-208, "DTC P0117, P0118 ECT SENSOR" and EC-220, "DTC P0125 ECT SENSOR" .

OK or NG

OK >> GO TO 33.
NG >> 1. Repair or replace.
2. GO TO 32.

32. ERASE UNNECESSARY DTC

After this inspection, unnecessary DTC might be displayed.
Erase the stored memory in ECM and TCM. Refer to EC-68, "How to Erase DTC" and AT-40, "HOW TO ERASE DTC" .

>> GO TO 4.

33. CHECK ECM FUNCTION

1. Substitute another known-good ECM to check ECM function. (ECM may be the cause of an incident, but this is a rare case.)
2. Perform initialization of IVIS (NATS) system and registration of all IVIS (NATS) ignition key IDs. Refer to BL-215, "ECM Re-Communicating Function" .

>> GO TO 4.

VIN Registration

ABS00E92

DESCRIPTION

VIN Registration is an operation to registering VIN in ECM. It must be performed each time ECM is replaced.

NOTE:
Accurate VIN which is registered in ECM may be required for Inspection & Maintenance (I/M).

OPERATION PROCEDURE

With CONSULT-II

1. Check the VIN of the vehicle and note it. Refer to GI-49, "IDENTIFICATION INFORMATION" .
2. Turn ignition switch ON and engine stopped.
3. Select “VIN REGISTRATION” in “WORK SUPPORT” mode.
4. Follow the instruction of CONSULT-II display.

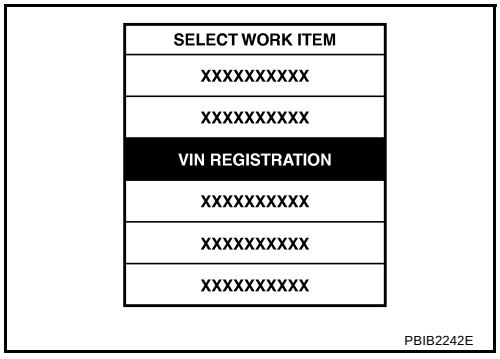

Accelerator Pedal Released Position Learning

ABS006KE

DESCRIPTION

Accelerator Pedal Released Position Learning is an operation to learn the fully released position of the accelerator pedal by monitoring the accelerator pedal position sensor output signal. It must be performed each time harness connector of accelerator pedal position sensor or ECM is disconnected.

OPERATION PROCEDURE

1. Make sure that accelerator pedal is fully released.
2. Turn ignition switch ON and wait at least 2 seconds.
3. Turn ignition switch OFF and wait at least 10 seconds.
4. Turn ignition switch ON and wait at least 2 seconds.
5. Turn ignition switch OFF and wait at least 10 seconds.

Throttle Valve Closed Position Learning

ABS006KF

DESCRIPTION

Throttle Valve Closed Position Learning is an operation to learn the fully closed position of the throttle valve by monitoring the throttle position sensor output signal. It must be performed each time harness connector of electric throttle control actuator or ECM is disconnected.

OPERATION PROCEDURE

1. Make sure that accelerator pedal is fully released.
2. Turn ignition switch ON.
3. Turn ignition switch OFF wait at least 10 seconds.
   Make sure that throttle valve moves during above 10 seconds by confirming the operating sound.

Idle Air Volume Learning

ABS006KG

DESCRIPTION

Idle Air Volume Learning is an operation to learn the idle air volume that keeps each engine within the specific range. It must be performed under any of the following conditions:

- Each time electric throttle control actuator or ECM is replaced.
- Idle speed or ignition timing is out of specification.

PREPARATION

Before performing Idle Air Volume Learning, make sure that all of the following conditions are satisfied. Learning will be cancelled if any of the following conditions are missed for even a moment.

- Battery voltage: More than 12.9V (At idle)
- Engine coolant temperature: 70 - 100°C (158 - 212°F)
- Park/neutral position switch: ON
- Electric load switch: OFF
  (Air conditioner, headlamp, rear window defogger)
  On vehicles equipped with daytime light systems, if the parking brake is applied before the engine is started the headlamp will not be illuminated.
- Steering wheel: Neutral (Straight-ahead position)
- Vehicle speed: Stopped
- Transmission: Warmed-up
  For models with CONSULT-II, drive vehicle until “ATF TEMP SE 1” in “DATA MONITOR” mode of “A/T” system indicates less than 0.9V.
  For models without CONSULT-II, drive vehicle for 10 minutes.

OPERATION PROCEDURE

With CONSULT-II

1. Perform EC-96, "Accelerator Pedal Released Position Learning" .
2. Perform EC-96, "Throttle Valve Closed Position Learning" .
3. Start engine and warm it up to normal operating temperature.
4. Check that all items listed under the topic PREPARATION (previously mentioned) are in good order.
5. Select “IDLE AIR VOL LEARN” in “WORK SUPPORT” mode.

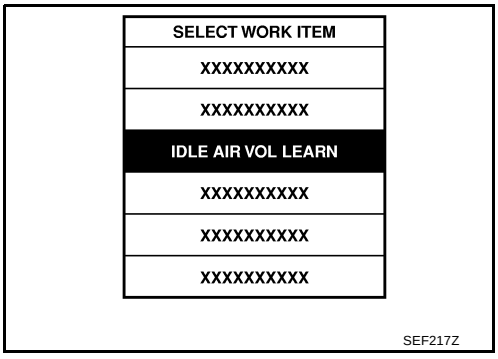

6. Touch “START” and wait 20 seconds.

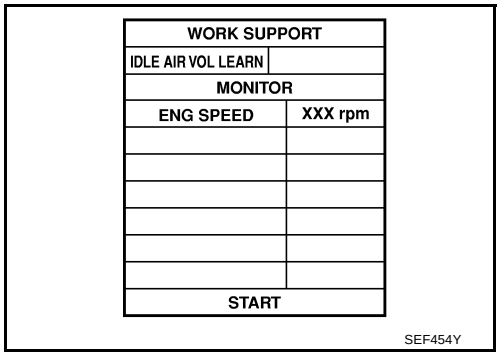

7. Make sure that “CMPLT” is displayed on CONSULT-II screen. If “CMPLT” is not displayed, Idle Air Volume Learning will not be carried out successfully. In this case, find the cause of the incident by referring to the DIAGNOSTIC PROCEDURE below.
8. Rev up the engine 2 or 3 times and make sure that idle speed and ignition timing are within the specifications.

ITEM	SPECIFICATION
Idle speed	650 ± 50 rpm (in P or N position)
Ignition timing	15 ± 5° BTDC (in P or N position)

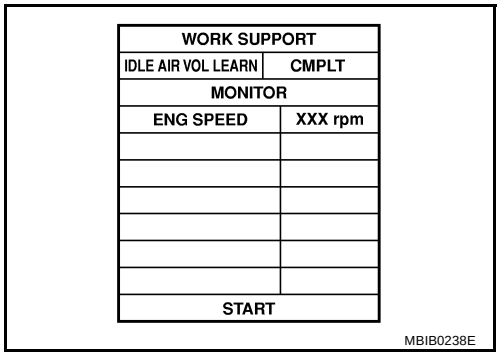

Without CONSULT-II

NOTE:

- **It is better to count the time accurately with a clock.**
- **It is impossible to switch the diagnostic mode when an accelerator pedal position sensor circuit has a malfunction.**

1. Perform EC-96, "Accelerator Pedal Released Position Learning" .
2. Perform EC-96, "Throttle Valve Closed Position Learning" .
3. Start engine and warm it up to normal operating temperature.
4. Check that all items listed under the topic PREPARATION (previously mentioned) are in good order.
5. Turn ignition switch OFF and wait at least 10 seconds.
6. Confirm that accelerator pedal is fully released, then turn ignition switch ON and wait 3 seconds.
7. Repeat the following procedure quickly 5 times within 5 seconds.

a. Fully depress the accelerator pedal.
b. Fully release the accelerator pedal.

8. Wait 7 seconds, fully depress the accelerator pedal and keep it for approx. 20 seconds until the MIL stops blinking and turned ON.
9. Fully release the accelerator pedal within 3 seconds after the MIL turned ON.
10. Start engine and let it idle.
11. Wait 20 seconds.

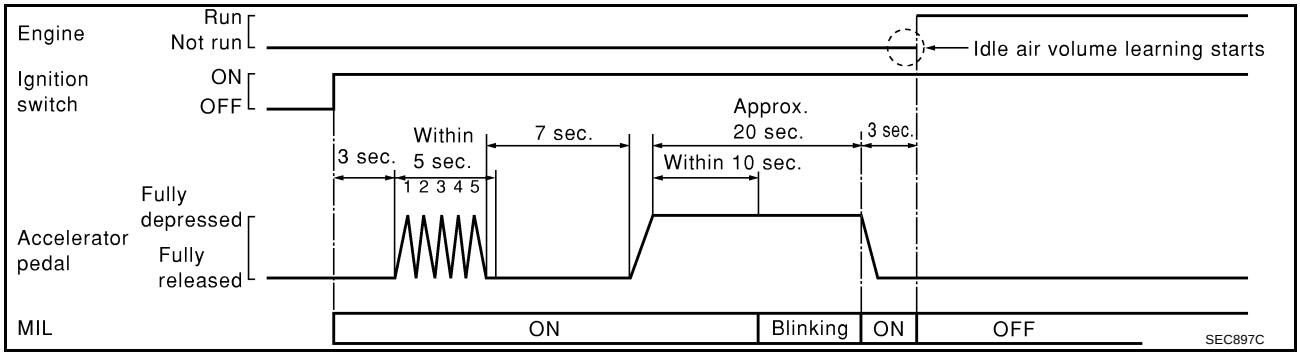

12. Rev up the engine two or three times and make sure that idle speed and ignition timing are within the specifications.

ITEM	SPECIFICATION
Idle speed	650 ± 50 rpm (in P or N position)
Ignition timing	15 ± 5° BTDC (in P or N position)

13. If idle speed and ignition timing are not within the specification, Idle Air Volume Learning will not be carried out successfully. In this case, find the cause of the incident by referring to the DIAGNOSTIC PROCEDURE below.

DIAGNOSTIC PROCEDURE

If idle air volume learning cannot be performed successfully, proceed as follows:

1. **Check that throttle valve is fully closed.**
2. **Check PCV valve operation.**
3. **Check that downstream of throttle valve is free from air leakage.**
4. **When the above three items check out OK, engine component parts and their installation condition are questionable. Check and eliminate the cause of the incident.**
   It is useful to perform **EC-153, "TROUBLE DIAGNOSIS - SPECIFICATION VALUE"** **.**
5. **If any of the following conditions occur after the engine has started, eliminate the cause of the incident and perform Idle Air Volume Learning all over again:**
   - **Engine stalls.**
   - **Erroneous idle.**

Fuel Pressure Check

ABS006KH

FUEL PRESSURE RELEASE

With CONSULT-II

1. Turn ignition switch ON.
2. Perform “FUEL PRESSURE RELEASE” in “WORK SUPPORT” mode with CONSULT-II.
3. Start engine.
4. After engine stalls, crank it 2 or 3 times to release all fuel pressure.
5. Turn ignition switch OFF.

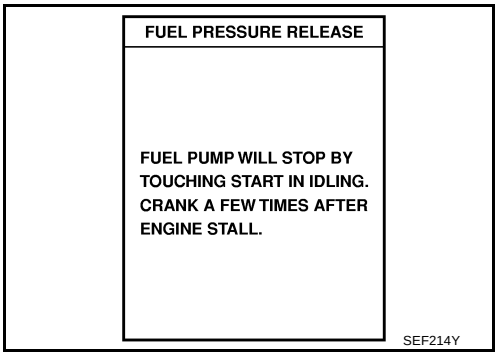

Without CONSULT-II

1. Remove fuel pump fuse located in IPDM E/R.
2. Start engine.
3. After engine stalls, crank it 2 or 3 times to release all fuel pressure.
4. Turn ignition switch OFF.
5. Reinstall fuel pump fuse after servicing fuel system.

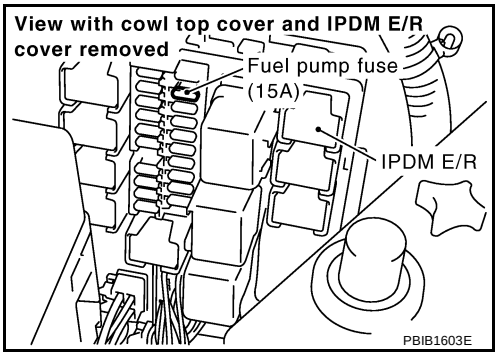

FUEL PRESSURE CHECK

CAUTION:

Before disconnecting fuel line, release fuel pressure from fuel line to eliminate danger.

NOTE:

- **Prepare pans or saucers under the disconnected fuel line because the fuel may spill out. The fuel pressure cannot be completely released because S50 models do not have fuel return system.**
- **Use Fuel Pressure Gauge Kit (J-44321) to check fuel pressure.**

1. Release fuel pressure to zero. Refer to EC-99, "FUEL PRESSURE RELEASE" .
2. Install the inline fuel quick disconnected fitting between fuel damper and injector tube.
3. Connect the fuel pressure test gauge (quick connector adapter hose) to the inline fuel quick disconnected fitting.
4. Turn ignition switch ON and check for fuel leakage.
5. Start engine and check for fuel leakage.
6. Read the indication of fuel pressure gauge.

   At idling: Approximately 350 kPa (3.57 kg/cm^2 , 51 psi)

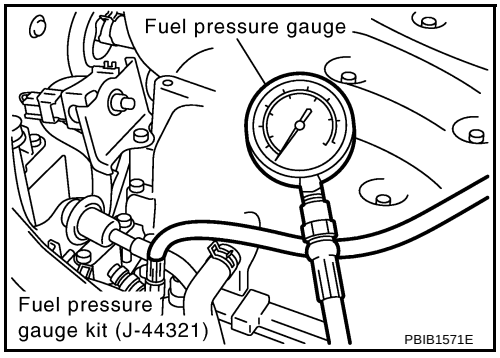

7. If result is unsatisfactory, go to next step.
8. Check the following.
   - Fuel hoses and fuel tubes for clogging
   - Fuel filter for clogging
   - Fuel pump
   - Fuel pressure regulator for clogging

   If OK, replace fuel pressure regulator.
   If NG, repair or replace.

TROUBLE DIAGNOSIS

PFP:00004

Trouble Diagnosis Introduction

ABS00E93

INTRODUCTION

The engine has an ECM to control major systems such as fuel control, ignition control, idle air control system, etc. The ECM accepts input signals from sensors and instantly drives actuators. It is essential that both input and output signals are proper and stable. At the same time, it is important that there are no malfunctions such as vacuum leaks, fouled spark plugs, or other malfunctions with the engine.

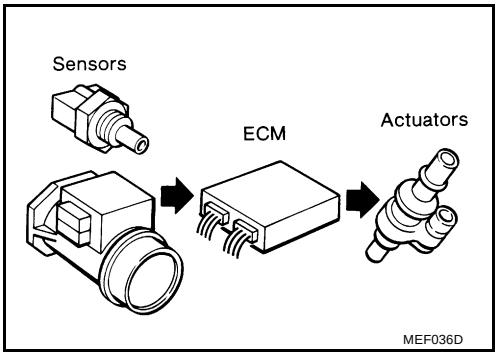

It is much more difficult to diagnose an incident that occurs intermittently rather than continuously. Most intermittent incidents are caused by poor electric connections or improper wiring. In this case, careful checking of suspected circuits may help prevent the replacement of good parts.

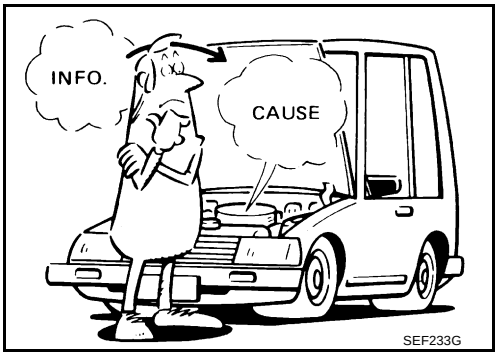

A visual check only may not find the cause of the incidents. A road test with CONSULT-II (or GST) or a circuit tester connected should be performed. Follow the WORK FLOW on EC-102 .
Before undertaking actual checks, take a few minutes to talk with a customer who approaches with a driveability complaint. The customer can supply good information about such incidents, especially intermittent ones. Find out what symptoms are present and under what conditions they occur. A DIAGNOSTIC WORKSHEET like the example on EC-106 should be used.
Start your diagnosis by looking for conventional malfunctions first. This will help troubleshoot driveability malfunctions on an electronically controlled engine vehicle.

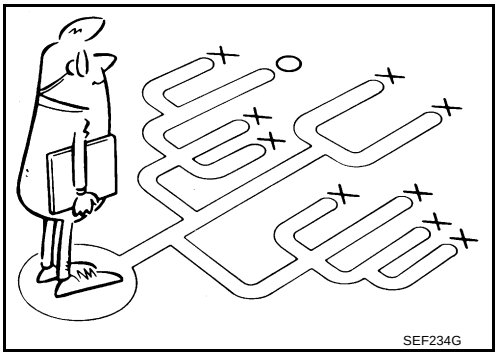

WORK FLOW
Overall Sequence

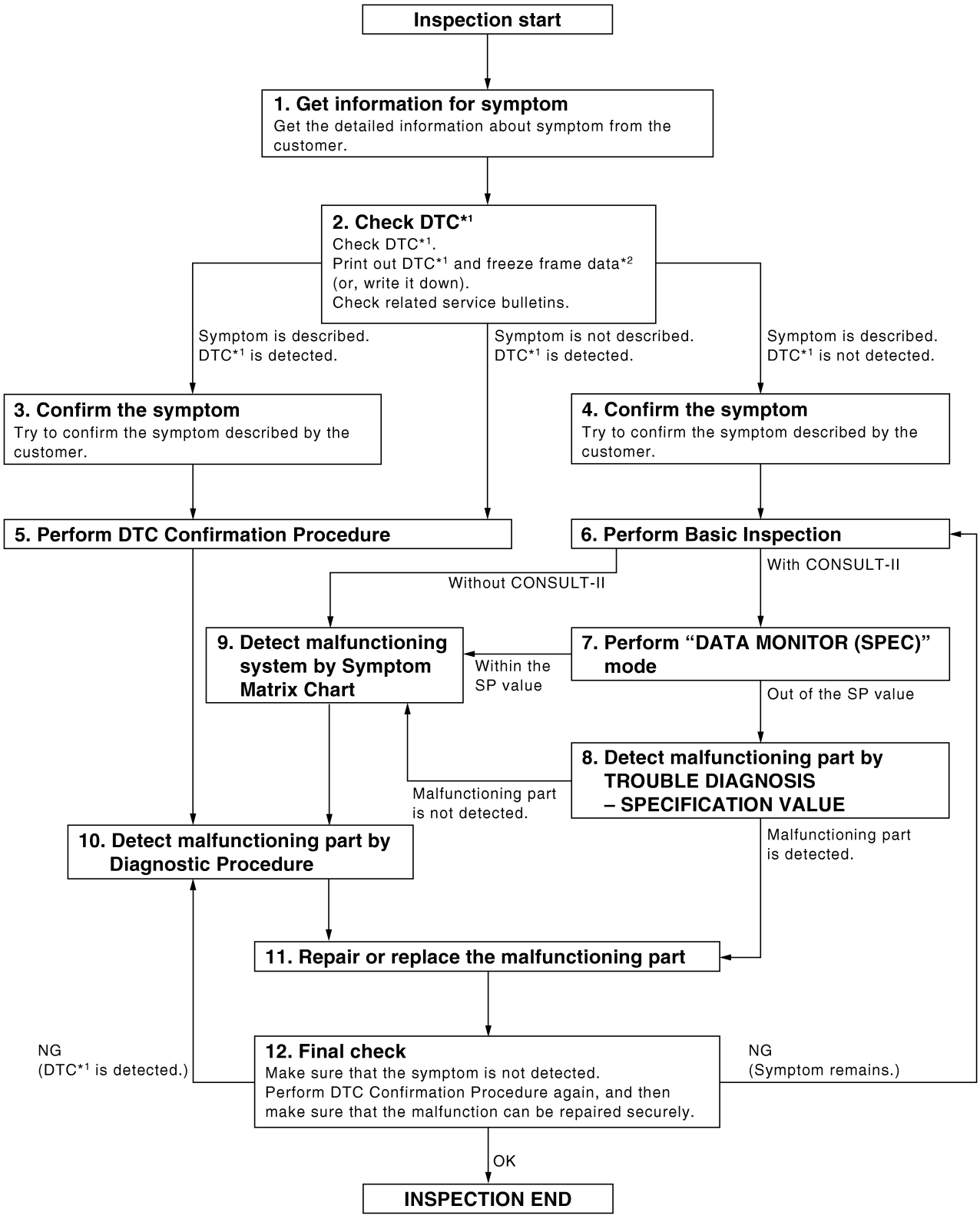

*1: Include 1st trip DTC.
*2: Include 1st trip freeze frame data.

PBIB2267E

Detailed Flow

1. GET INFORMATION FOR SYMPTOM

Get the detailed information from the customer about the symptom (the condition and the environment when the incident/malfunction occurred) using the EC-105, "DIAGNOSTIC WORKSHEET" .

>> GO TO 2.

2. CHECK DTC*1

1. Check DTC*1 .
2. Perform the following procedure if DTC*1 is displayed.

- Record DTC*1 and freeze frame data*2 . (Print them out with CONSULT-II or GST.)
- Erase DTC*1 . (Refer to EC-68, "HOW TO ERASE EMISSION-RELATED DIAGNOSTIC INFORMATION" .)
- Study the relationship between the cause detected by DTC*1 and the symptom described by the customer. (Symptom Matrix Chart is useful. Refer to EC-110, "Symptom Matrix Chart" .)

3. Check related service bulletins for information.

Is any symptom described and any DTC detected?

Symptom is described, DTC*1 is displayed>>GO TO 3.
Symptom is described, DTC*1 is not displayed>>GO TO 4.
Symptom is not described, DTC*1 is displayed>>GO TO 5.

3. CONFIRM THE SYMPTOM

Try to confirm the symptom described by the customer (except MIL ON).
DIAGNOSIS WORK SHEET is useful to verify the incident.
Connect CONSULT-II to the vehicle in “DATA MONITOR (AUTO TRIG)” mode and check real time diagnosis results.
Verify relation between the symptom and the condition when the symptom is detected.

>> GO TO 5.

4. CONFIRM THE SYMPTOM

Try to confirm the symptom described by the customer.
DIAGNOSIS WORK SHEET is useful to verify the incident.
Connect CONSULT-II to the vehicle in “DATA MONITOR (AUTO TRIG)” mode and check real time diagnosis results.
Verify relation between the symptom and the condition when the symptom is detected.

>> GO TO 6.

5. PERFORM DTC CONFIRMATION PROCEDURE

Perform DTC Confirmation Procedure for the displayed DTC*1 , and then make sure that DTC*1 is detected again.
At this time, always connect CONSULT-II to the vehicle, and check diagnostic results in real time on “DATA MONITOR (AUTO TRIG)”.
If two or more DTCs*1 are detected, refer to EC-107, "DTC Inspection Priority Chart" and determine trouble diagnosis order.

NOTE:

- Freeze frame data*2 is useful if the DTC*1 is not detected.
- Perform Overall Function Check if DTC Confirmation Procedure is not included on Service Manual. This simplified check procedure is an effective alternative though DTC*1 cannot be detected during this check. If the result of Overall Function Check is NG, it is the same as the detection of DTC*1 by DTC Confirmation Procedure.

Is DTC*1 detected?

Yes >> GO TO 10.
No >> Check according to EC-163, "TROUBLE DIAGNOSIS FOR INTERMITTENT INCIDENT" .

6. PERFORM BASIC INSPECTION

Perform EC-78, "Basic Inspection"

With CONSULT-II>>GO TO 7.
Without CONSULT-II>>GO TO 9.

7. PERFORM DATA MONITOR (SPEC) MODE

With CONSULT-II
Make sure that “MAS A/F SE-B1”, “B/FUEL SCHDL”, and “A/F ALPHA-B1”, “A/F ALPHA-B2” are within the SP value using CONSULT-II “DATA MONITOR (SPEC)” mode. Refer to EC-154, "Diagnostic Procedure" .

Are they within the SP value?

Yes >> GO TO 9.
No >> GO TO 8.

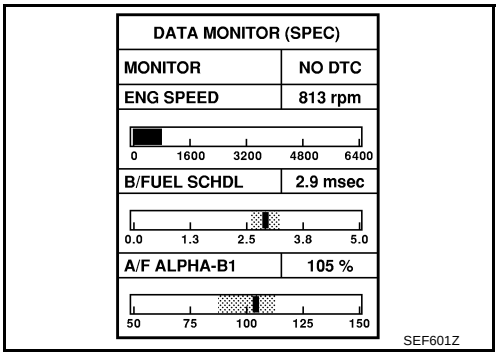

8. DETECT MALFUNCTIONING PART BY TROUBLE DIAGNOSIS - SPECIFICATION VALUE

Detect malfunctioning part according to EC-153, "TROUBLE DIAGNOSIS - SPECIFICATION VALUE" .

Is malfunctioning part detected?

Yes >> GO TO 11.
No >> GO TO 9.

9. DETECT MALFUNCTIONING SYSTEM BY SYMPTOM MATRIX CHART

Detect malfunctioning system according to EC-110, "Symptom Matrix Chart" based on the confirmed symptom in step 4, and determine the trouble diagnosis order based on possible causes and symptom.

>> GO TO 10.

10. DETECT MALFUNCTIONING PART BY DIAGNOSTIC PROCEDURE

Inspect according to Diagnostic Procedure of the system.

NOTE:
The Diagnostic Procedure in EC section described based on open circuit inspection. A short circuit inspection is also required for the circuit check in the Diagnostic Procedure. For details, refer to Circuit Inspection in GI-27, "How to Perform Efficient Diagnosis for an Electrical Incident" .

Is malfunctioning part detected?

Yes >> GO TO 11.
No >> Monitor input data from related sensors or check voltage of related ECM terminals using CONSULT-II. Refer to EC-147, "CONSULT-II Reference Value in Data Monitor" , EC-123, "ECM Terminals and Reference Value" .

11. REPAIR OR REPLACE THE MALFUNCTIONING PART

1. Repair or replace the malfunctioning part.
2. Reconnect parts or connectors disconnected during Diagnostic Procedure again after repair and replacement.
3. Check DTC. If DTC is displayed, erase it, refer to EC-68, "HOW TO ERASE EMISSION-RELATED DIAGNOSTIC INFORMATION" .

>> GO TO 12.

12. FINAL CHECK

When DTC was detected in step 2, perform DTC Confirmation Procedure or Overall Function Check again, and then make sure that the malfunction have been repaired securely.
When symptom was described from the customer, refer to confirmed symptom in step 3 or 4, and make sure that the symptom is not detected.

OK or NG

NG (DTC*1 is detected)>>GO TO 10.
NG (Symptom remains)>>GO TO 6.
OK >> 1. Before returning the vehicle to the customer, make sure to erase unnecessary DTC*1 in ECM and TCM (Transmission Control Module). (Refer to EC-68, "HOW TO ERASE EMISSION-RELATED DIAGNOSTIC INFORMATION" and AT-40, "HOW TO ERASE DTC" .)
2. If the completion of SRT is needed, drive vehicle under the specific driving pattern. Refer to EC-65, "Driving Pattern" .
3. **INSPECTION END**

*1: Include 1st trip DTC.
*2: Include 1st trip freeze frame data.

DIAGNOSTIC WORKSHEET

Description

There are many operating conditions that lead to the malfunction of engine components. A good grasp of such conditions can make troubleshooting faster and more accurate.
In general, each customer feels differently about a incident. It is important to fully understand the symptoms or conditions for a customer complaint.
Utilize a diagnostic worksheet like the one on the next page in order to organize all the information for troubleshooting.
Some conditions may cause the MIL to come on steady or blink and DTC to be detected. Examples:

- Vehicle ran out of fuel, which caused the engine to misfire.
- Fuel filler cap was left off or incorrectly screwed on, allowing fuel to evaporate into the atmosphere.

KEY POINTS

WHAT ..... Vehicle & engine model
WHEN ..... Date, Frequencies
WHERE..... Road conditions
HOW ..... Operating conditions, Weather conditions, Symptoms

SEF907L

Worksheet Sample

Customer name MR/MS		Model & Year	VIN
Engine #		Trans.	Mileage
Incident Date		Manuf. Date	In Service Date
Fuel and fuel filler cap		☐ Vehicle ran out of fuel causing misfire ☐ Fuel filler cap was left off or incorrectly screwed on.	
Symptoms	☐ Startability	☐ Impossible to start ☐ No combustion ☐ Partial combustion ☐ Partial combustion affected by throttle position ☐ Partial combustion NOT affected by throttle position ☐ Possible but hard to start ☐ Others [ ]	
	☐ Idling	☐ No fast idle ☐ Unstable ☐ High idle ☐ Low idle ☐ Others [ ]	
	☐ Driveability	☐ Stumble ☐ Surge ☐ Knock ☐ Lack of power ☐ Intake backfire ☐ Exhaust backfire ☐ Others [ ]	
	☐ Engine stall	☐ At the time of start ☐ While idling ☐ While accelerating ☐ While decelerating ☐ Just after stopping ☐ While loading	
Incident occurrence		☐ Just after delivery ☐ Recently ☐ In the morning ☐ At night ☐ In the daytime	
Frequency		☐ All the time ☐ Under certain conditions ☐ Sometimes	
Weather conditions		☐ Not affected	
	Weather	☐ Fine ☐ Raining ☐ Snowing ☐ Others [ ]	
	Temperature	☐ Hot ☐ Warm ☐ Cool ☐ Cold ☐ Humid ˚F	
Engine conditions		☐ Cold ☐ During warm-up ☐ After warm-up Engine speed 0 2,000 4,000 6,000 8,000 rpm	
Road conditions		☐ In town ☐ In suburbs ☐ Highway ☐ Off road (up/down)	
Driving conditions		☐ Not affected ☐ At starting ☐ While idling ☐ At racing ☐ While accelerating ☐ While cruising ☐ While decelerating ☐ While turning (RH/LH) Vehicle speed 0 10 20 30 40 50 60 MPH	
Malfunction indicator lamp		☐ Turned on ☐ Not turned on	

MTBL0017

DTC Inspection Priority Chart

ABS006KP

If some DTCs are displayed at the same time, perform inspections one by one based on the following priority chart.

NOTE:
If DTC U1000 and/or U1001 is displayed with other DTC, first perform the trouble diagnosis for DTC U1000, U1001. Refer to EC-171 .

Priority	Detected items (DTC)
1	● U1000 U1001 CAN communication line ● P0101 P0102 P0103 Mass air flow sensor ● P0112 P0113 P0127 Intake air temperature sensor ● P0117 P0118 P0125 Engine coolant temperature sensor ● P0128 Thermostat function ● P0122 P0123 P0222 P0223 P1225 P1226 P2135 Throttle position sensor ● P0181 P0182 P0183 Fuel tank temperature sensor ● P0327 P0328 Knock sensor ● P0335 Crankshaft position sensor (POS) ● P0340 P0345 Camshaft position sensor (PHASE) ● P0460 P0461 P0462 P0463 Fuel level sensor ● P0500 Vehicle speed sensor ● P0605 ECM ● P0700 TCM ● P0705 Park/Neutral position (PNP) switch ● P1229 Sensor power supply ● P1610 - P1615 NATS ● P1706 Park/Neutral position (PNP) switch ● P2122 P2123 P2127 P2128 P2138 Accelerator pedal position sensor

Priority	Detected items (DTC)
2	● P0037 P0038 P0057 P0058 Heated oxygen sensor 2 heater ● P0138 P0139 P0158 P0159 P1146 P1147 P1166 P1167 Heated oxygen sensor 2 ● P0441 EVAP control system purge flow monitoring ● P0444 P0445 P1444 EVAP canister purge volume control solenoid valve ● P0447 P1446 EVAP canister vent control valve ● P0451 P0452 P0453 EVAP control system pressure sensor ● P0550 Power steering pressure sensor ● P0710 P0720 P0725 P0740 P0744 P0745 P1705 P1716 P1730 P1752 P1754 P1757 P1759 P1762 P1764 P1767 P1769 P1772 P1774 A/T related sensors, solenoid valves and switches ● P1031 P1032 P1051 P1052 Air fuel ratio (A/F) sensor 1 heater ● P1065 ECM power supply ● P1111 P1136 Intake valve timing control solenoid valve ● P1122 Electric throttle control function ● P1124 P1126 P1128 Electric throttle control actuator ● P1217 Engine over temperature (OVERHEAT) ● P1271 P1272 P1273 P1274 P1276 P1278 P1279 P1281 P1282 P1283 P1284 P1286 P1288 P1289 Air fuel ratio (A/F) sensor 1 ● P1805 Brake switch
3	● P0011 P0021 Intake valve timing control ● P0171 P0172 P0174 P0175 Fuel injection system function ● P0300 - P0306 Misfire ● P0420 P0430 Three way catalyst function ● P0442 P0455 P0456 EVAP control system ● P0506 P0507 Idle speed control system ● P1121 Electric throttle control actuator ● P1148 P1168 Closed loop control ● P1211 TCS control unit ● P1212 TCS communication line ● P1564 ICC steering switch/ASCD steering switch ● P1568 ICC command valve ● P1572 ICC brake switch/ASCD brake switch ● P1574 ICC vehicle speed sensor/ASCD vehicle speed sensor

Fail-Safe Chart

ABS006KQ

When the DTC listed below is detected, the ECM enters fail-safe mode and the MIL lights up.

DTC No.	Detected items	Engine operating condition in fail-safe mode
P0102 P0103	Mass air flow sensor circuit	Engine speed will not rise more than 2,400 rpm due to the fuel cut.
P0117 P0118	Engine coolant temperature sensor circuit	Engine coolant temperature will be determined by ECM based on the time after turning ignition switch ON or START. CONSULT-II displays the engine coolant temperature decided by ECM.
		Condition: Just as ignition switch is turned ON or START — Engine coolant temperature decided (CONSULT-II display): 40°C (104°F)
		Condition: More than approx. 4 minutes after ignition ON or START — Engine coolant temperature decided (CONSULT-II display): 80°C (176°F)
		Condition: Except as shown above — Engine coolant temperature decided (CONSULT-II display): 40 - 80°C (104 - 176°F) (Depends on the time)
		When the fail-safe system for engine coolant temperature sensor is activated, the cooling fan operates while engine is running.
P0122 P0123 P0222 P0223 P2135	Throttle position sensor	The ECM controls the electric throttle control actuator in regulating the throttle opening in order for the idle position to be within +10 degrees. The ECM regulates the opening speed of the throttle valve to be slower than the normal condition. So, the acceleration will be poor.
P1121	Electric throttle control actuator	(When electric throttle control actuator does not function properly due to the return spring malfunction:) ECM controls the electric throttle actuator by regulating the throttle opening around the idle position. The engine speed will not rise more than 2,000 rpm.
		(When throttle valve opening angle in fail-safe mode is not in specified range:) ECM controls the electric throttle control actuator by regulating the throttle opening to 20 degrees or less.
		(When ECM detects the throttle valve is stuck open:) While the vehicle is driving, it slows down gradually by fuel cut. After the vehicle stops, the engine stalls. The engine can restart in N or P position, and engine speed will not exceed 1,000 rpm or more.
P1122	Electric throttle control function	ECM stops the electric throttle control actuator control, throttle valve is maintained at a fixed opening (approx. 5 degrees) by the return spring.
P1124 P1126	Throttle control motor relay	ECM stops the electric throttle control actuator control, throttle valve is maintained at a fixed opening (approx. 5 degrees) by the return spring.
P1128	Throttle control motor	ECM stops the electric throttle control actuator control, throttle valve is maintained at a fixed opening (approx. 5 degrees) by the return spring.
P1229	Sensor power supply	ECM stops the electric throttle control actuator control, throttle valve is maintained at a fixed opening (approx. 5 degrees) by the return spring.
P2122 P2123 P2127 P2128 P2138	Accelerator pedal position sensor	The ECM controls the electric throttle control actuator in regulating the throttle opening in order for the idle position to be within +10 degrees. The ECM regulates the opening speed of the throttle valve to be slower than the normal condition. So, the acceleration will be poor.

- When there is an open circuit on MIL circuit, the ECM cannot warn the driver by MIL lighting up when there is malfunction on engine control system.
  Therefore, when electrical controlled throttle and part of ECM related diagnoses are continuously detected as NG for 5 trips, ECM warns the driver that engine control system malfunctions and MIL circuit is open by means of operating fail-safe function.
  The fail-safe function also operates when above diagnoses except MIL circuit are detected and demands the driver to repair the malfunction.

Engine operating condition in fail-safe mode	Engine speed will not rise more than 2,500 rpm due to the fuel cut

Symptom Matrix Chart

ABS006KS

SYSTEM — BASIC ENGINE CONTROL SYSTEM

		SYMPTOM													Reference page
		HARD/NO START/RESTART (EXCP. HA)	ENGINE STALL	HESITATION/SURGING/FLAT SPOT	SPARK KNOCK/DETONATION	LACK OF POWER/POOR ACCELERATION	HIGH IDLE/LOW IDLE	ROUGH IDLE/HUNTING	IDLING VIBRATION	SLOW/NO RETURN TO IDLE	OVERHEATS/WATER TEMPERATURE HIGH	EXCESSIVE FUEL CONSUMPTION	EXCESSIVE OIL CONSUMPTION	BATTERY DEAD (UNDER CHARGE)	
Warranty symptom code		AA	AB	AC	AD	AE	AF	AG	AH	AJ	AK	AL	AM	HA	
Fuel	Fuel pump circuit	1	1	2	3	2		2	2			3		2	EC-668
	Fuel pressure regulator system	3	3	4	4	4	4	4	4	4		4			EC-99
	Injector circuit	1	1	2	3	2		2	2			2			EC-661
	Evaporative emission system	3	3	4	4	4	4	4	4	4		4			EC-39
Air	Positive crankcase ventilation system	3	3	4	4	4	4	4	4	4		4	1		EC-51
	Incorrect idle speed adjustment						1	1	1	1		1			EC-78
	Electric throttle control actuator	1	1	2	3	3	2	2	2	2		2		2	EC-424, EC-426
Ignition	Incorrect ignition timing adjustment	3	3	1	1	1		1	1			1			EC-78
	Ignition circuit	1	1	2	2	2		2	2			2			EC-648
Power supply and ground circuit		2	2	3	3	3		3	3		2	3			EC-164
Mass air flow sensor circuit		1	1	1	2	2		2	2			2			EC-186, EC-195
Engine coolant temperature sensor circuit					3		3			3					EC-208, EC-220
Air fuel ratio (A/F) sensor															EC-488 EC-497 EC-506 EC-516 EC-526 EC-536 EC-548
Throttle position sensor circuit							2			2					EC-213, EC-278 , EC-479 , EC-481 , EC-633
Accelerator pedal position sensor circuit				3	2	1									EC-483, EC-619 , EC-626 , EC-640
Knock sensor circuit				2								3			EC-295
Crankshaft position sensor (POS) circuit		2	2												EC-300
Camshaft position sensor (PHASE) circuit		3	2												EC-307

	SYMPTOM													Reference page
	HARD/NO START/RESTART (EXCP. HA)	ENGINE STALL	HESITATION/SURGING/FLAT SPOT	SPARK KNOCK/DETONATION	LACK OF POWER/POOR ACCELERATION	HIGH IDLE/LOW IDLE	ROUGH IDLE/HUNTING	IDLING VIBRATION	SLOW/NO RETURN TO IDLE	OVERHEATS/WATER TEMPERATURE HIGH	EXCESSIVE FUEL CONSUMPTION	EXCESSIVE OIL CONSUMPTION	BATTERY DEAD (UNDER CHARGE)	
Warranty symptom code	AA	AB	AC	AD	AE	AF	AG	AH	AJ	AK	AL	AM	HA	
Vehicle speed signal circuit		2	3		3						3			EC-391
Power steering pressure sensor circuit		2					3	3						EC-397
ECM	2	2	3	3	3	3	3	3	3	3	3			EC-402, EC-413
Intake valve timing control solenoid valve circuit		3	2		1	3	2	2	3		3			EC-417
Park/neutral position (PNP) switch circuit			3		3		3	3			3			EC-609
Refrigerant pressure sensor circuit		2				3			3		4			EC-674
Electrical load signal circuit							3							EC-679
Air conditioner circuit	2	2	3	3	3	3	3	3	3		3		2	ATC-40
ABS actuator and electric unit (control unit)			4											BRC-12

1 - 6: The numbers refer to the order of inspection.
(continued on next page)

SYSTEM — ENGINE MECHANICAL & OTHER

		SYMPTOM													Reference page
		HARD/NO START/RESTART (EXCP. HA)	ENGINE STALL	HESITATION/SURGING/FLAT SPOT	SPARK KNOCK/DETONATION	LACK OF POWER/POOR ACCELERATION	HIGH IDLE/LOW IDLE	ROUGH IDLE/HUNTING	IDLING VIBRATION	SLOW/NO RETURN TO IDLE	OVERHEATS/WATER TEMPERATURE HIGH	EXCESSIVE FUEL CONSUMPTION	EXCESSIVE OIL CONSUMPTION	BATTERY DEAD (UNDER CHARGE)	
Warranty symptom code		AA	AB	AC	AD	AE	AF	AG	AH	AJ	AK	AL	AM	HA	
Fuel	Fuel tank	5	5												FL-10
	Fuel piping			5	5	5		5	5			5			EM-45
	Vapor lock														—
	Valve deposit	5		5	5	5		5	5			5			—
	Poor fuel (Heavy weight gasoline, Low octane)														—
Air	Air duct	5	5	5	5	5	5	5	5	5		5			EM-17
	Air cleaner														EM-17
	Air leakage from air duct (Mass air flow sensor — electric throttle control actuator)														EM-17
	Electric throttle control actuator														EM-19
	Air leakage from intake manifold/ Collector/Gasket														EM-19, EM-24
Cranking	Battery	1	1	1		1		1	1			1		1	SC-4
	Generator circuit														SC-23
	Starter circuit	3													SC-10
	Signal plate	6													EM-122
	Park/neutral position (PNP) switch	4													AT-114
Engine	Cylinder head	5	5	5	5	5		5	5			5			EM-100
	Cylinder head gasket										4		3		
	Cylinder block	6	6	6	6	6		6	6			6	4		EM-122
	Piston														
	Piston ring														
	Connecting rod														
	Bearing														
	Crankshaft														

		SYMPTOM													Reference page
		HARD/NO START/RESTART (EXCP. HA)	ENGINE STALL	HESITATION/SURGING/FLAT SPOT	SPARK KNOCK/DETONATION	LACK OF POWER/POOR ACCELERATION	HIGH IDLE/LOW IDLE	ROUGH IDLE/HUNTING	IDLING VIBRATION	SLOW/NO RETURN TO IDLE	OVERHEATS/WATER TEMPERATURE HIGH	EXCESSIVE FUEL CONSUMPTION	EXCESSIVE OIL CONSUMPTION	BATTERY DEAD (UNDER CHARGE)	
Warranty symptom code		AA	AB	AC	AD	AE	AF	AG	AH	AJ	AK	AL	AM	HA	
Valve mechanism	Timing chain	5	5	5	5	5		5	5			5			EM-64
	Camshaft														EM-84
	Intake valve timing control														EM-64
	Intake valve												3		EM-100
	Exhaust valve														
Exhaust	Exhaust manifold/Tube/Muffler/Gasket	5	5	5	5	5		5	5			5			EM-26, EX-3
	Three way catalyst														
Lubrication	Oil pan/Oil strainer/Oil pump/Oil filter/Oil gallery/Oil cooler	5	5	5	5	5		5	5			5			EM-30, LU-17 , LU-10 , LU-14
	Oil level (Low)/Filthy oil														LU-7
Cooling	Radiator/Hose/Radiator filler cap	5	5	5	5	5		5	5		4	5			CO-14, CO-17
	Thermostat									5					CO-26
	Water pump														CO-22
	Water gallery														CO-28
	Cooling fan									5					EC-226
	Coolant level (Low)/Contaminated coolant									5					CO-11
IVIS (Infiniti Vehicle Immobilizer System — NATS)		1	1												EC-53 or BL-213

1 - 6: The numbers refer to the order of inspection.

Engine Control Component Parts Location

ABS006KT

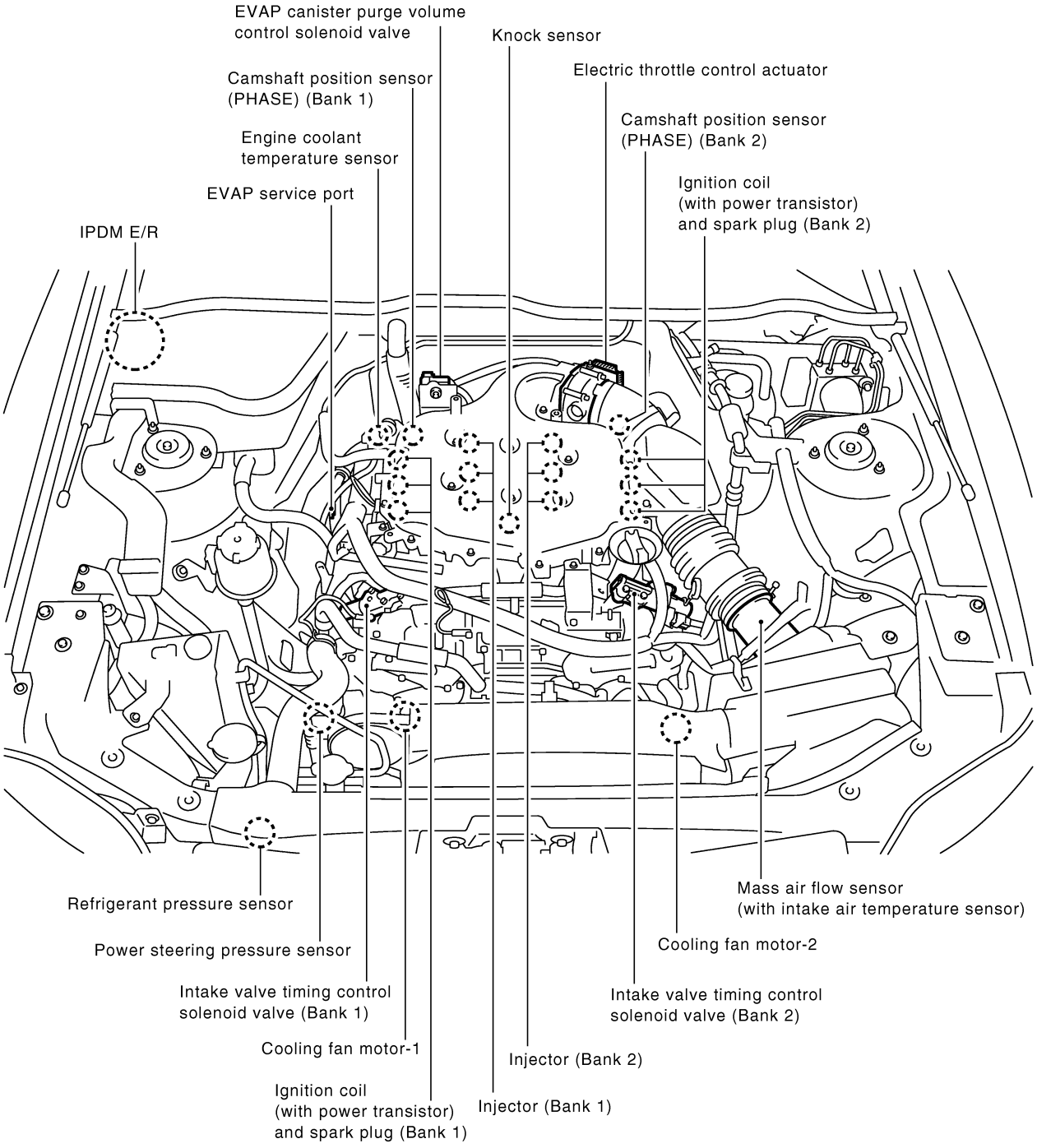

PBIB2002E

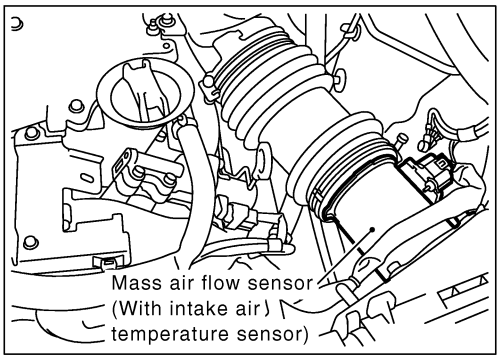
Mass air flow sensor
(With intake air
temperature sensor)

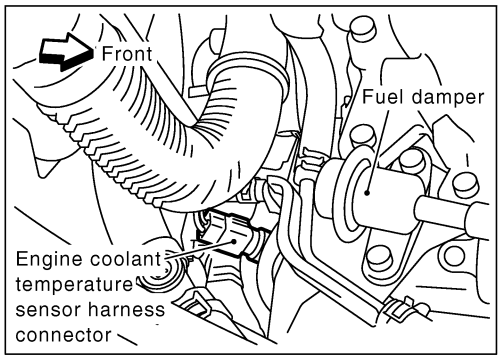
Front
Fuel damper
Engine coolant
temperature
sensor harness
connector

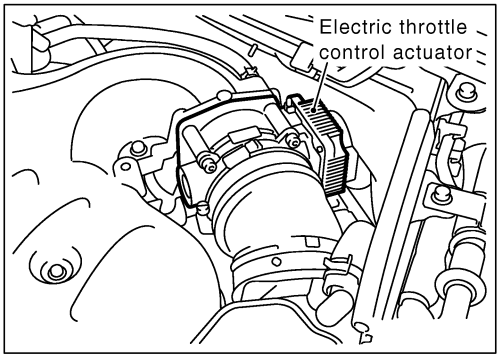
Electric throttle
control actuator

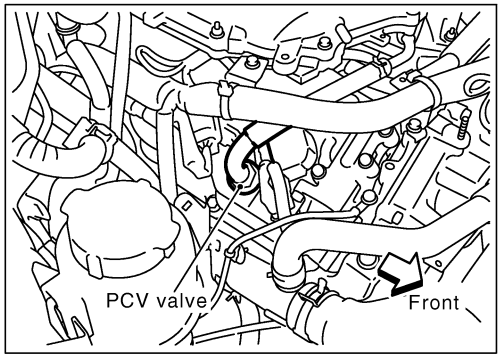
PCV valve
Front

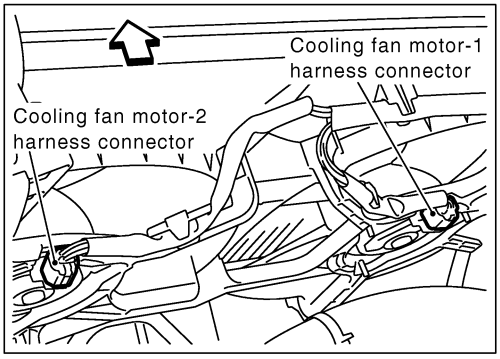
Cooling fan motor-1
harness connector
Cooling fan motor-2
harness connector

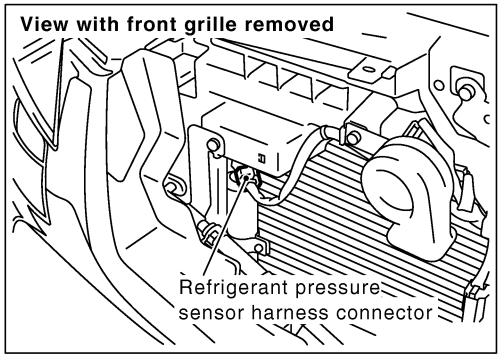
View with front grille removed
Refrigerant pressure
sensor harness connector

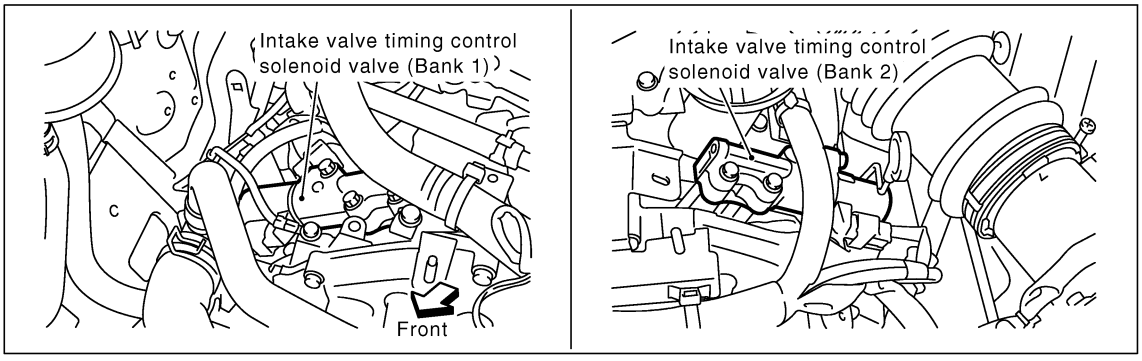
Intake valve timing control
solenoid valve (Bank 1)
Front
Intake valve timing control
solenoid valve (Bank 2)

PBIB2003E

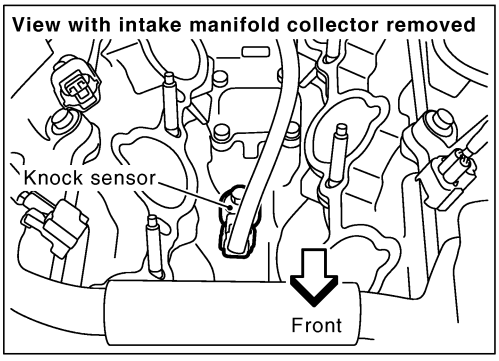
View with intake manifold collector removed
Knock sensor
Front

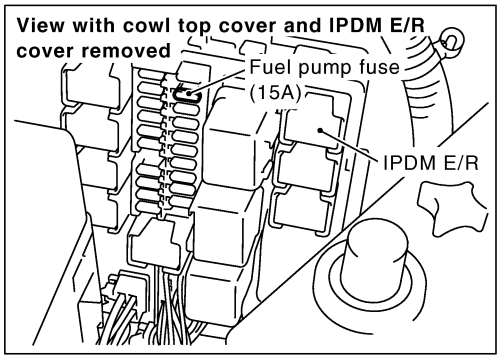
View with cowl top cover and IPDM E/R cover removed
Fuel pump fuse (15A)
IPDM E/R

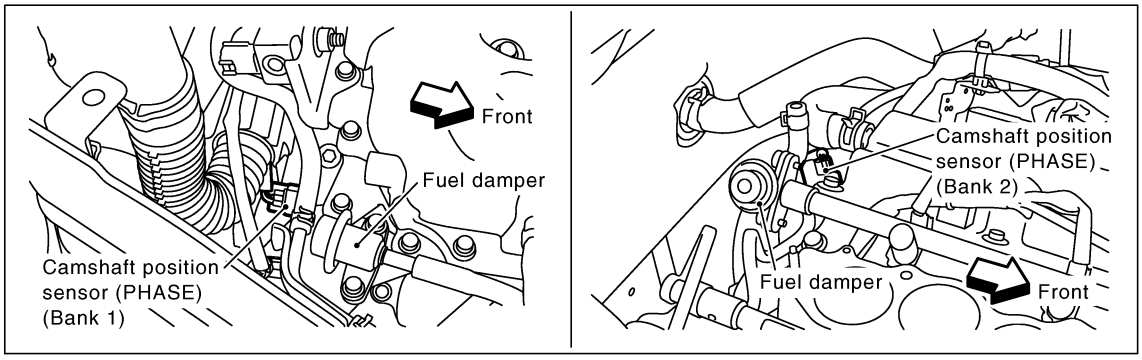
Front
Fuel damper
Camshaft position sensor (PHASE) (Bank 1)
Camshaft position sensor (PHASE) (Bank 2)
Fuel damper
Front

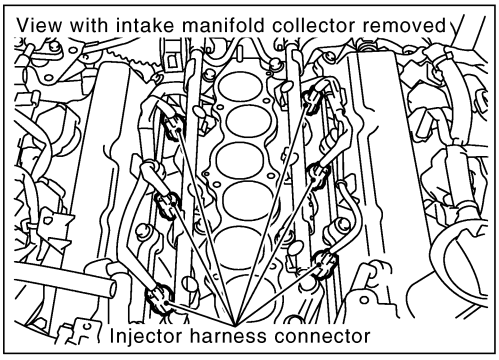
View with intake manifold collector removed
Injector harness connector

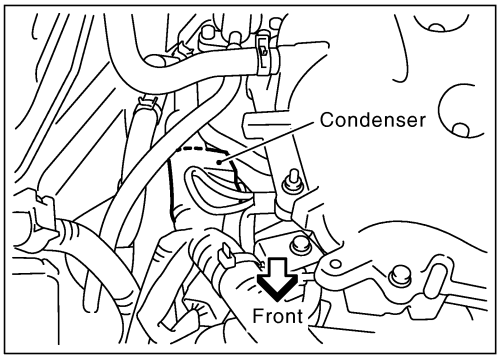
Condenser
Front

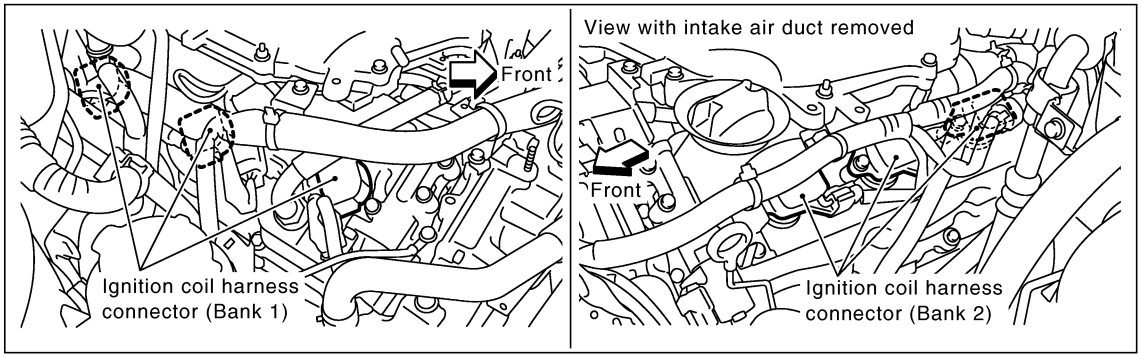
Front
Ignition coil harness connector (Bank 1)
View with intake air duct removed
Front
Ignition coil harness connector (Bank 2)

PBIB1616E

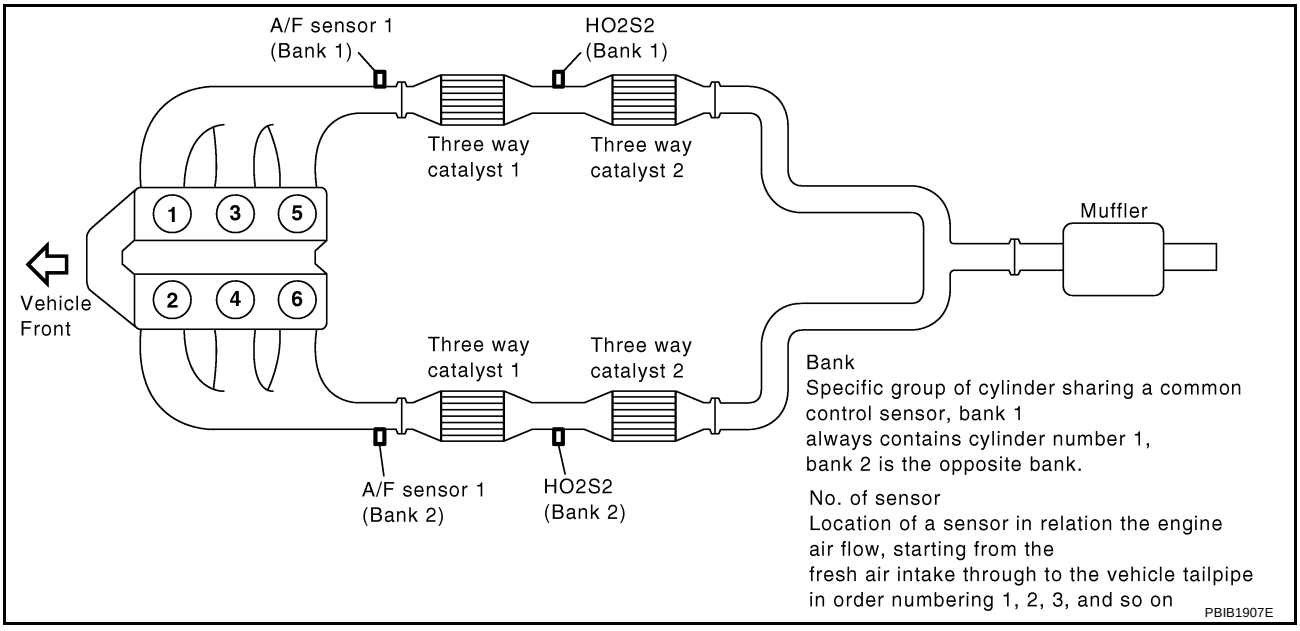
A/F sensor 1
(Bank 1)
HO2S2
(Bank 1)
Three way
catalyst 1
Three way
catalyst 2
1
3
5
2
4
6
Vehicle
Front
Muffler
Three way
catalyst 1
Three way
catalyst 2
A/F sensor 1
(Bank 2)
HO2S2
(Bank 2)
Bank
Specific group of cylinder sharing a common control sensor, bank 1 always contains cylinder number 1, bank 2 is the opposite bank.
No. of sensor
Location of a sensor in relation the engine air flow, starting from the fresh air intake through to the vehicle tailpipe in order numbering 1, 2, 3, and so on
PBIB1907E

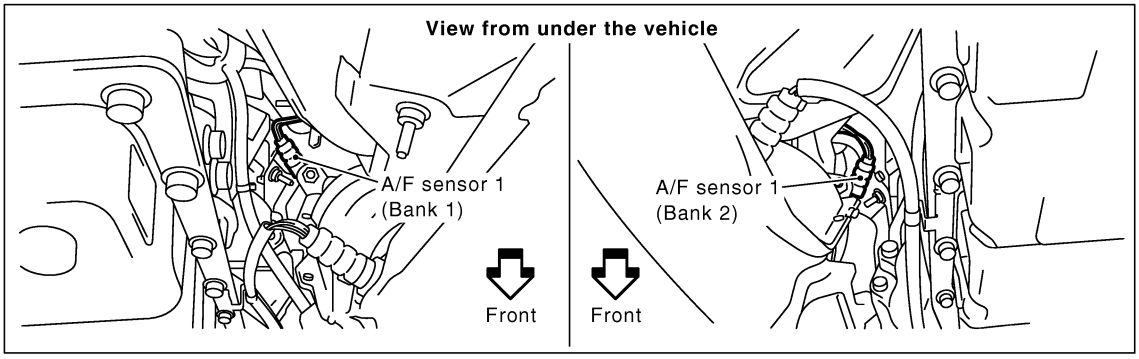
View from under the vehicle
A/F sensor 1
(Bank 1)
Front
A/F sensor 1
(Bank 2)
Front

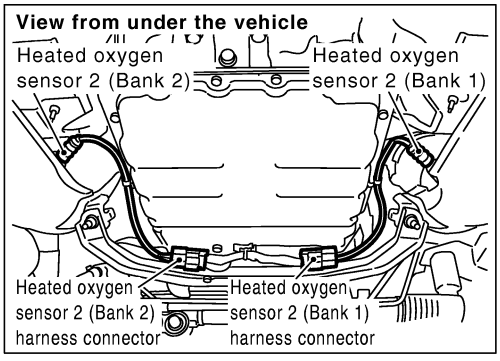
View from under the vehicle
Heated oxygen
sensor 2 (Bank 2)
Heated oxygen
sensor 2 (Bank 1)
Heated oxygen
sensor 2 (Bank 2)
harness connector
Heated oxygen
sensor 2 (Bank 1)
harness connector

PBIB2188E

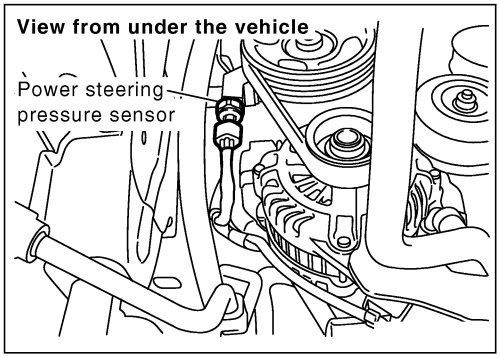
View from under the vehicle
Power steering pressure sensor

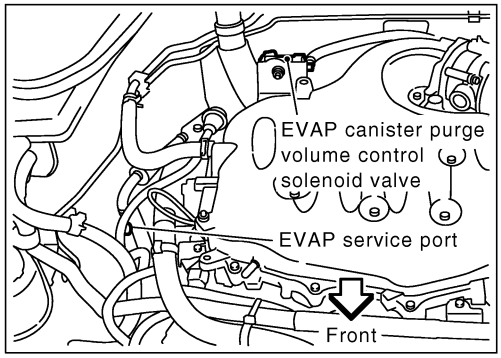
EVAP canister purge volume control solenoid valve
EVAP service port
Front

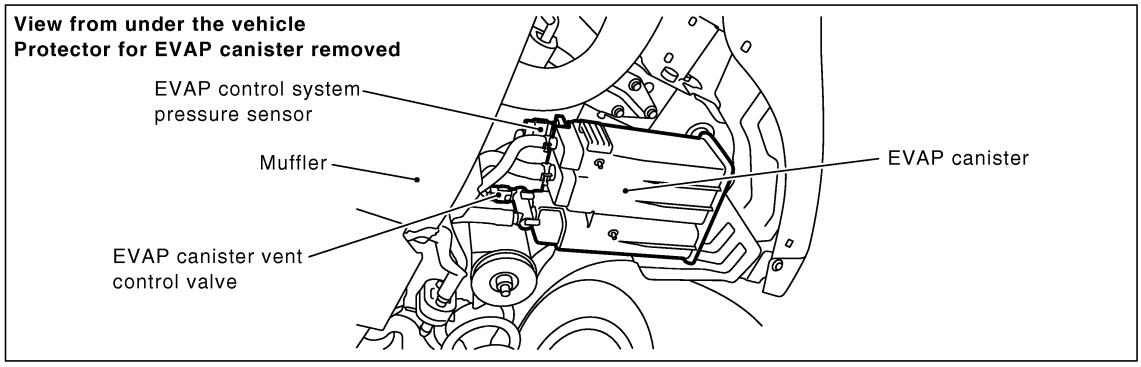
View from under the vehicle
Protector for EVAP canister removed
EVAP control system pressure sensor
Muffler
EVAP canister vent control valve
EVAP canister

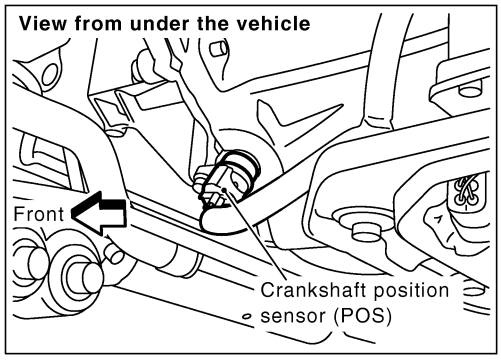
View from under the vehicle
Front
Crankshaft position sensor (POS)

PBIB2004E

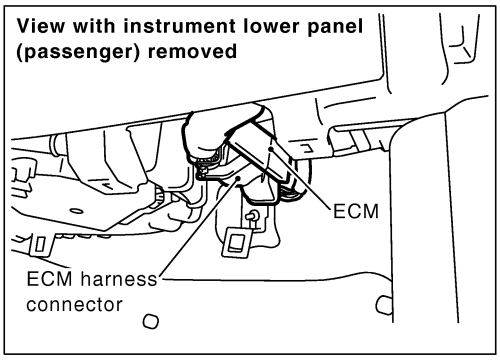
View with instrument lower panel (passenger) removed
ECM
ECM harness connector

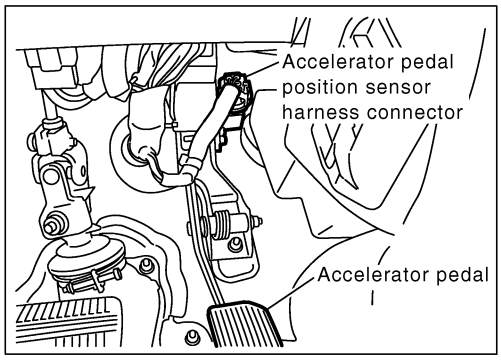
Accelerator pedal position sensor harness connector
Accelerator pedal

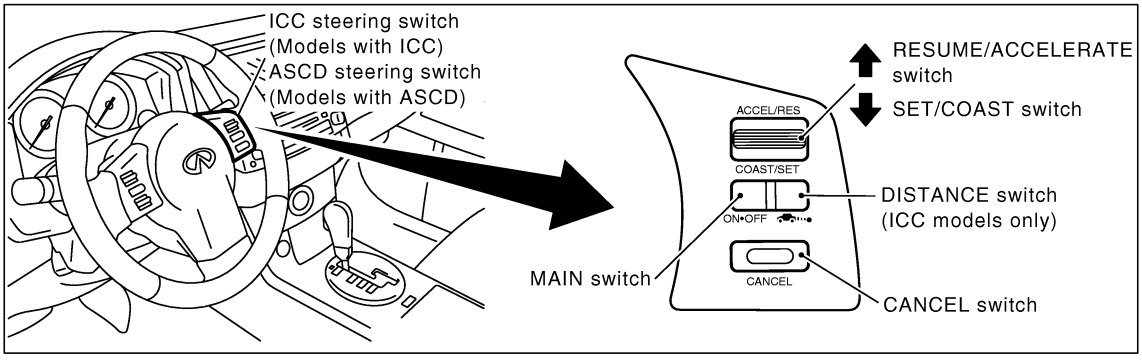
ICC steering switch (Models with ICC)
ASCD steering switch (Models with ASCD)
RESUME/ACCELERATE switch
SET/COAST switch
ACCEL/RES
COAST/SET
ON•OFF
CANCEL
DISTANCE switch (ICC models only)
MAIN switch
CANCEL switch

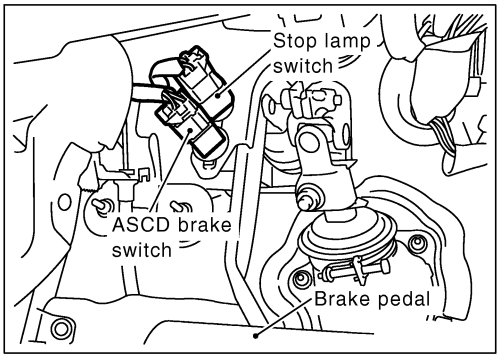
Stop lamp switch
ASCD brake switch
Brake pedal

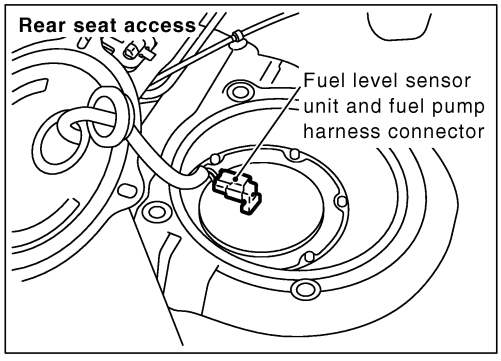
Rear seat access
Fuel level sensor unit and fuel pump harness connector

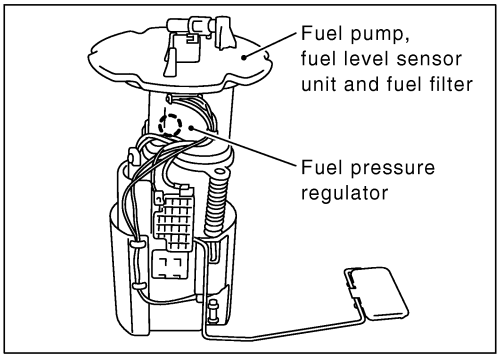
Fuel pump, fuel level sensor unit and fuel filter
Fuel pressure regulator

PBIB2623E

Vacuum Hose Drawing

ABS006K5

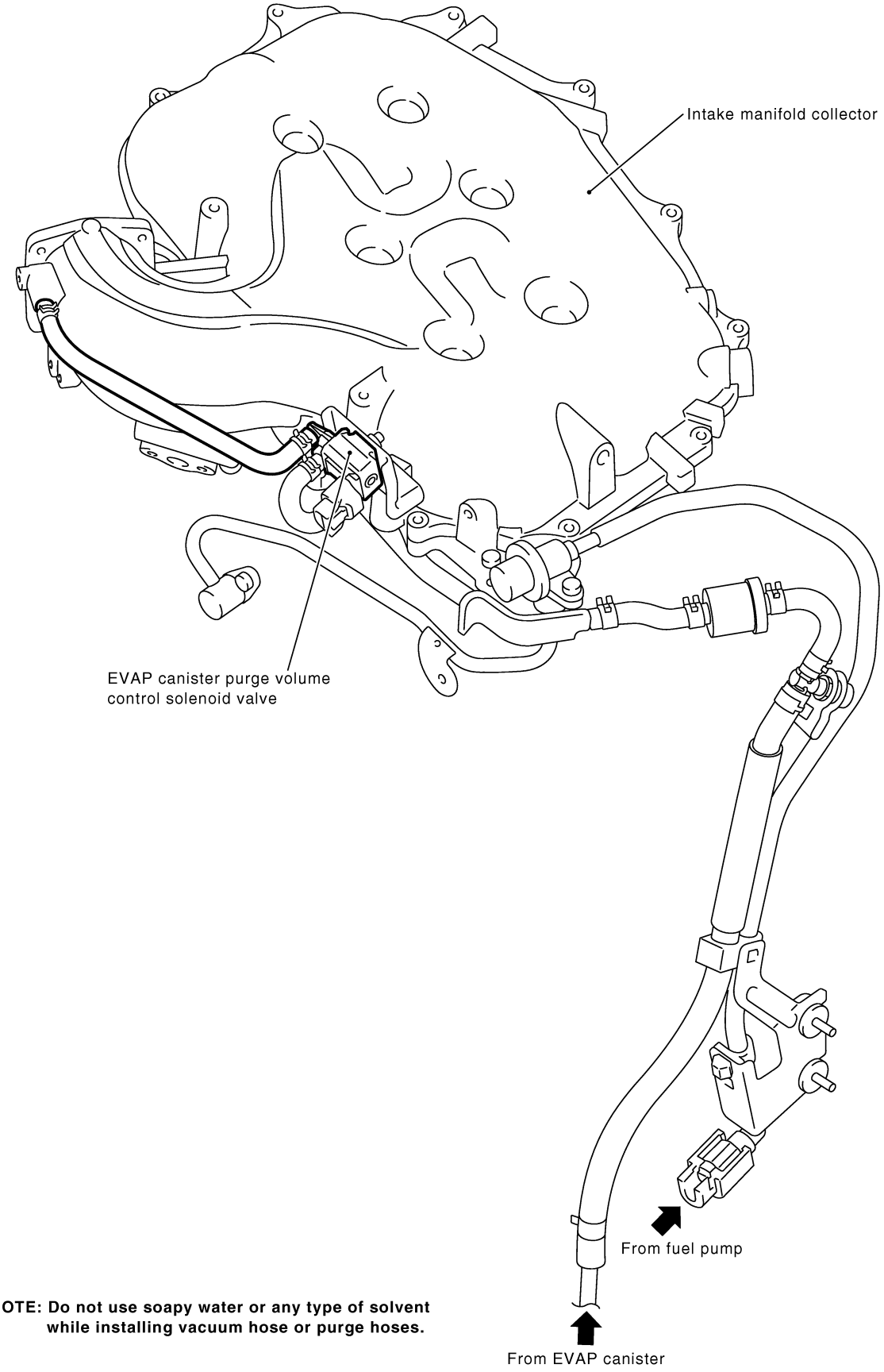

NOTE: Do not use soapy water or any type of solvent while installing vacuum hose or purge hoses.

PBIB2000E

Refer to EC-30, "System Diagram" for Vacuum Control System.

Circuit Diagram

ABS006KU

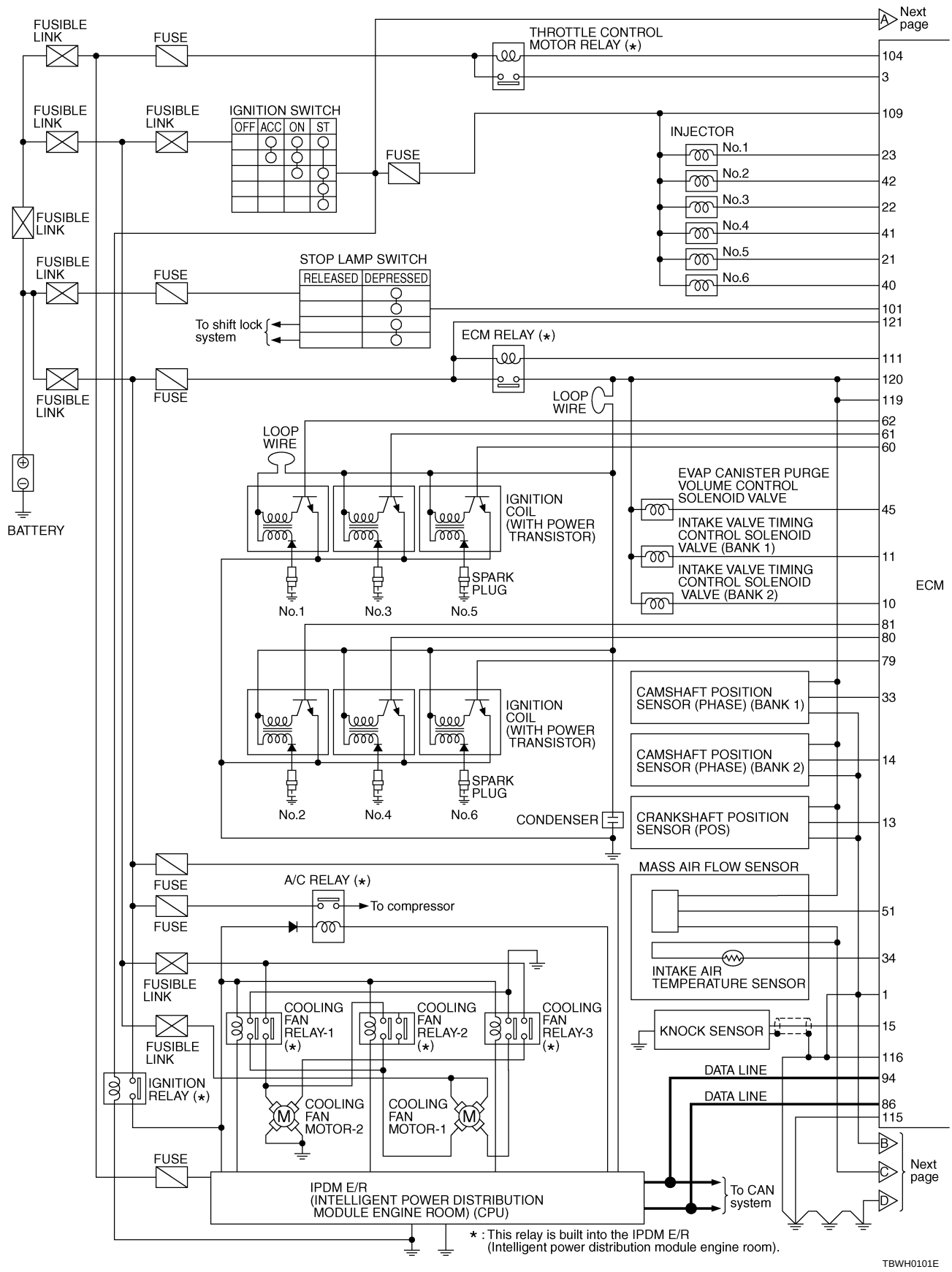

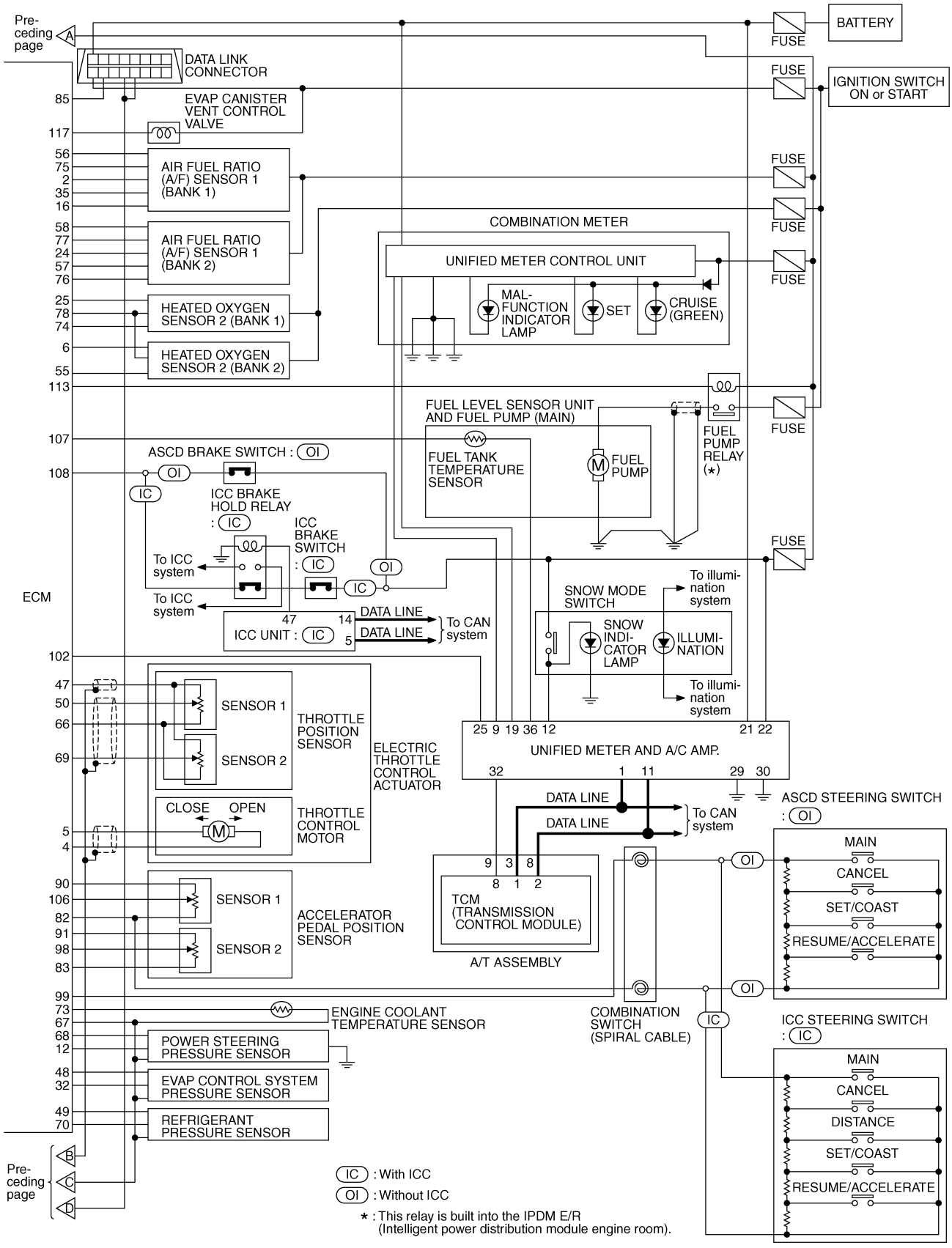
Pre-ceding page
A
DATA LINK CONNECTOR
BATTERY
FUSE
IGNITION SWITCH ON or START
EVAP CANISTER VENT CONTROL VALVE
AIR FUEL RATIO (A/F) SENSOR 1 (BANK 1)
AIR FUEL RATIO (A/F) SENSOR 1 (BANK 2)
HEATED OXYGEN SENSOR 2 (BANK 1)
HEATED OXYGEN SENSOR 2 (BANK 2)
COMBINATION METER
UNIFIED METER CONTROL UNIT
MAL-FUNCTION INDICATOR LAMP
SET
CRUISE (GREEN)
FUEL LEVEL SENSOR UNIT AND FUEL PUMP (MAIN)
FUEL TANK TEMPERATURE SENSOR
FUEL PUMP
FUEL PUMP RELAY (*)
ASCD BRAKE SWITCH : OI
ICC BRAKE HOLD RELAY : IC
ICC BRAKE SWITCH : IC
To ICC system
ECM
ICC UNIT : IC
DATA LINE
To CAN system
SNOW MODE SWITCH
SNOW INDI-CATOR LAMP
ILLUMI-NATION
To illumi-nation system
SENSOR 1
SENSOR 2
THROTTLE POSITION SENSOR
ELECTRIC THROTTLE CONTROL ACTUATOR
CLOSE
OPEN
THROTTLE CONTROL MOTOR
UNIFIED METER AND A/C AMP.
ASCD STEERING SWITCH : OI
MAIN
CANCEL
SET/COAST
RESUME/ACCELERATE
ACCELERATOR PEDAL POSITION SENSOR
TCM (TRANSMISSION CONTROL MODULE)
A/T ASSEMBLY
COMBINATION SWITCH (SPIRAL CABLE)
ICC STEERING SWITCH : IC
DISTANCE
ENGINE COOLANT TEMPERATURE SENSOR
POWER STEERING PRESSURE SENSOR
EVAP CONTROL SYSTEM PRESSURE SENSOR
REFRIGERANT PRESSURE SENSOR
Pre-ceding page
B
C
D
IC : With ICC
OI : Without ICC
* : This relay is built into the IPDM E/R (Intelligent power distribution module engine room).
TBWM0731E

ECM Harness Connector Terminal Layout

ABS006KV

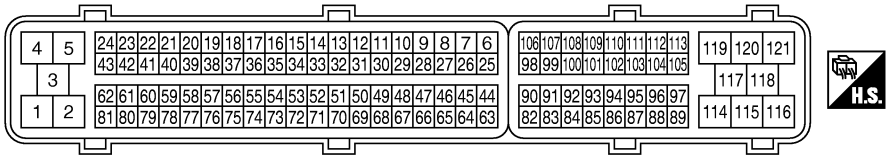

PBIB1192E

ECM Terminals and Reference Value

ABS006KW

PREPARATION

1. ECM is located behind the passenger side instrument lower panel. For this inspection, remove passenger side instrument lower panel.
2. Remove ECM harness connector.

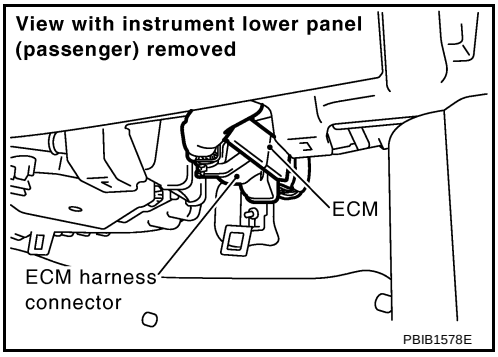

PBIB1578E

3. When disconnecting ECM harness connector, loosen it with levers as far as they will go as shown in the figure.
4. Connect a break-out box (SST) and Y-cable adapter (SST) between the ECM and ECM harness connector.
   - Use extreme care not to touch 2 pins at one time.
   - Data is for comparison and may not be exact.

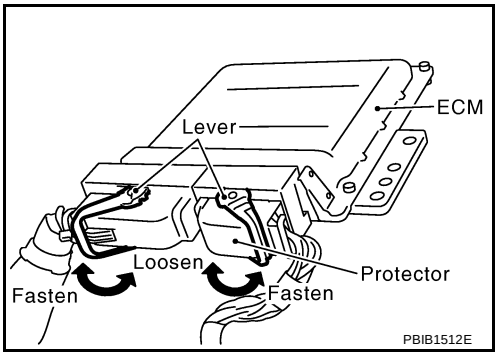

PBIB1512E

ECM INSPECTION TABLE

Specification data are reference values and are measured between each terminal and ground.
Pulse signal is measured by CONSULT-II.

CAUTION:

Do not use ECM ground terminals when measuring input/output voltage. Doing so may result in damage to the ECMs transistor. Use a ground other than ECM terminals, such as the ground.

TERMINAL NO.	WIRE COLOR	ITEM	CONDITION	DATA (DC Voltage)
1	B	ECM ground	**[Engine is running]** ● Idle speed	Body ground
2	R/L	A/F sensor 1 heater (bank 1)	**[Engine is running]** ● **Warm-up condition** ● Idle speed	Approximately 5V★ 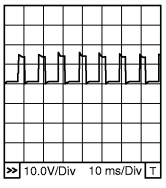 PBIB1584E

TER-MINAL NO.	WIRE COLOR	ITEM	CONDITION	DATA (DC Voltage)
3	R	Throttle control motor relay power supply	**[Ignition switch: ON]**	BATTERY VOLTAGE (11 - 14V)
4	L/W	Throttle control motor (Close)	**[Ignition switch: ON]** ● Engine stopped ● Selector lever: D ● Accelerator pedal: Fully released	0 - 14V★ 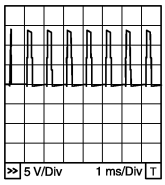 PBIB1104E
5	L/B	Throttle control motor (Open)	**[Ignition switch: ON]** ● Engine stopped ● Selector lever: D ● Accelerator pedal: Fully depressed	0 - 14V★ 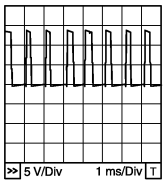 PBIB1105E
6	R	Heated oxygen sensor 2 heater (bank 2)	**[Engine is running]** ● Engine speed is below 3,600 rpm after the following conditions are met – Engine: after warming up – Keeping the engine speed between 3,500 and 4,000 rpm for 1 minute and at idle for 1 minute under no load	0 - 1.0V
			[Ignition switch: ON] ● Engine stopped **[Engine is running]** ● Engine speed is above 3,600 rpm	BATTERY VOLTAGE (11 - 14V)
10	OR	Intake valve timing control solenoid valve (bank 2)	**[Engine is running]** ● **Warm-up condition** ● Idle speed	BATTERY VOLTAGE (11 - 14V)
			[Engine is running] ● **Warm-up condition** ● When revving engine up to 2,500 rpm quickly	7 - 12V★ 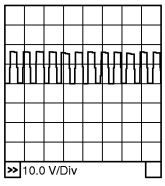 PBIB1790E
11	BR	Intake valve timing control solenoid valve (bank 1)	**[Engine is running]** ● **Warm-up condition** ● Idle speed	BATTERY VOLTAGE (11 - 14V)
			[Engine is running] ● **Warm-up condition** ● When revving engine up to 2,500 rpm quickly	7 - 12V★ 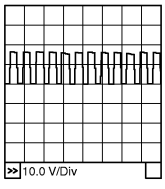 PBIB1790E

TER-MINAL NO.	WIRE COLOR	ITEM	CONDITION	DATA (DC Voltage)
12	R/G	Power steering pressure sensor	**[Engine is running]** ● Steering wheel: Being turned	0.5 - 4.5V
			[Engine is running] ● Steering wheel: Not being turned	0.4 - 0.8V
13	Y	Crankshaft position sensor (POS)	**[Engine is running]** ● **Warm-up condition** ● Idle speed **NOTE:** The pulse cycle changes depending on rpm at idle	Approximately 1.6V★ 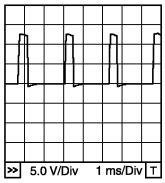 PBIB1041E
			[Engine is running] ● Engine speed is 2,000 rpm	Approximately 1.4V★ 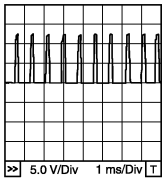 PBIB1042E
14	BR	Camshaft position sensor (PHASE) (bank 2)	**[Engine is running]** ● **Warm-up condition** ● Idle speed **NOTE:** The pulse cycle changes depending on rpm at idle	1.0 - 4.0V★ 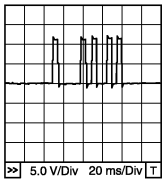 PBIB1039E
			[Engine is running] ● Engine speed is 2,000 rpm	1.0 - 4.0V★ 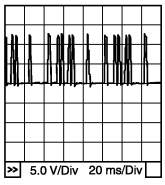 PBIB1040E
15	W	Knock sensor	**[Engine is running]** ● Idle speed	Approximately 2.5V
16	G	A/F sensor 1 (Bank 1)	**[Engine is running]** ● **Warm-up condition** ● Idle speed	Approximately 3.1V
35	B/R			Approximately 2.6V
56	L			Approximately 2.3V
75	R/B			Approximately 2.3V

TER-MINAL NO.	WIRE COLOR	ITEM	CONDITION	DATA (DC Voltage)
21 22 23	W G R	Injector No. 5 Injector No. 3 Injector No. 1	**[Engine is running]** ● **Warm-up condition** ● Idle speed **NOTE:** The pulse cycle changes depending on rpm at idle	BATTERY VOLTAGE (11 - 14V)★ 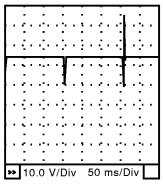 SEC984C
			[Engine is running] ● **Warm-up condition** ● Engine speed is 2,000 rpm	BATTERY VOLTAGE (11 - 14V)★ 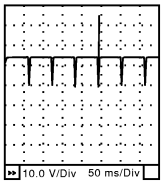 SEC985C
24	L	A/F sensor 1 heater (Bank 2)	**[Engine is running]** ● **Warm-up condition** ● Idle speed	Approximately 5V★ 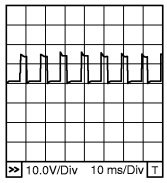 PBIB1584E
25	P	Heated oxygen sensor 2 heater (bank 1)	**[Engine is running]** ● Engine speed is below 3,600 rpm after the following conditions are met – Engine: after warming up – Keeping the engine speed between 3,500 and 4,000 rpm for 1 minute and at idle for 1 minute under no load	0 - 1.0V
			[Ignition switch: ON] ● Engine stopped **[Engine is running]** ● Engine speed is above 3,600 rpm	BATTERY VOLTAGE (11 - 14V)
32	OR	EVAP control system pressure sensor	**[Ignition switch: ON]**	Approximately 1.8 - 4.8V

TER-MINAL NO.	WIRE COLOR	ITEM	CONDITION	DATA (DC Voltage)
33	R/L	Camshaft position sensor (PHASE) (bank 1)	**[Engine is running]** ● **Warm-up condition** ● Idle speed **NOTE:** The pulse cycle changes depending on rpm at idle	1.0 - 4.0V★ 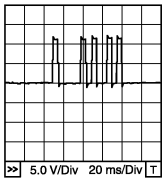 PBIB1039E
			[Engine is running] ● Engine speed is 2,000 rpm	1.0 - 4.0V★ 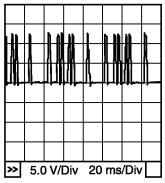 PBIB1040E
34	OR	Intake air temperature sensor	**[Engine is running]**	Approximately 0 - 4.8V Output voltage varies with intake air temperature.
40 41 42	LG B P	Injector No. 6 Injector No. 4 Injector No. 2	**[Engine is running]** ● **Warm-up condition** ● Idle speed **NOTE:** The pulse cycle changes depending on rpm at idle	BATTERY VOLTAGE (11 - 14V)★ 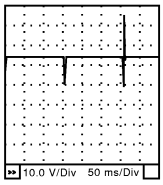 SEC984C
			[Engine is running] ● **Warm-up condition** ● Engine speed is 2,000 rpm	BATTERY VOLTAGE (11 - 14V)★ 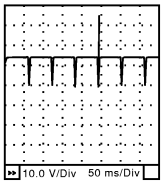 SEC985C
45	GY	EVAP canister purge volume control solenoid valve	**[Engine is running]** ● Idle speed ● Accelerator pedal is not depressed even slightly, after engine starting	BATTERY VOLTAGE (11 - 14V)★ 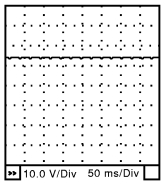 SEC990C
			[Engine is running] ● Engine speed is about 2,000 rpm (More than 100 seconds after starting engine)	BATTERY VOLTAGE (11 - 14V)★ 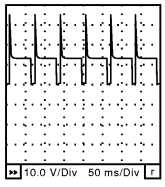 SEC991C

TER-MINAL NO.	WIRE COLOR	ITEM	CONDITION	DATA (DC Voltage)
47	L	Sensor power supply (Throttle position sensor)	**[Ignition switch: ON]**	Approximately 5V
48	LG	Sensor power supply (EVAP control system pressure sensor)	**[Ignition switch: ON]**	Approximately 5V
49	PU	Sensor power supply (Refrigerant pressure sensor)	**[Ignition switch: ON]**	Approximately 5V
50	W	Throttle position sensor 1	**[Ignition switch: ON]** ● Engine stopped ● Selector lever: D ● Accelerator pedal: Fully released	More than 0.36V
			[Ignition switch: ON] ● Engine stopped ● Selector lever: D ● Accelerator pedal: Fully depressed	Less than 4.75V
51	L/W	Mass air flow sensor	**[Engine is running]** ● **Warm-up condition** ● Idle speed	1.0 - 1.2V
			[Engine is running] ● **Warm-up condition** ● Engine speed is 2,500 rpm	1.6 - 2.0V
55	W/R	Heated oxygen sensor 2 (bank 2)	**[Engine is running]** ● **Warm-up condition** ● Revving engine from idle to 3,000 rpm quickly after the following conditions are met – After keeping the engine speed between 3,500 and 4,000 rpm for 1 minute and at idle for 1 minute under no load	0 - Approximately 1.0V
57	G	A/F sensor 1 (Bank 2)	**[Engine is running]** ● **Warm-up condition** ● Idle speed	Approximately 2.6V
58	Y			Approximately 2.3V
76	P			Approximately 3.1V
77	BR			Approximately 2.3V
60 61 62	PU L Y	Ignition signal No. 5 Ignition signal No. 3 Ignition signal No. 1	**[Engine is running]** ● **Warm-up condition** ● Idle speed **NOTE:** The pulse cycle changes depending on rpm at idle	0 - 0.2V★ 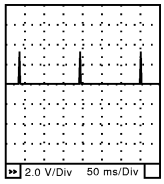 SEC986C
			[Engine is running] ● **Warm-up condition** ● Engine speed is 2,500 rpm	0.1 - 0.4V★ 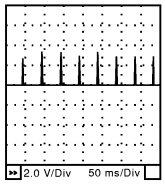 SEC987C

TER-MINAL NO.	WIRE COLOR	ITEM	CONDITION	DATA (DC Voltage)
66	B	Sensor ground (Throttle position sensor)	**[Engine is running]** ● **Warm-up condition** ● Idle speed	Approximately 0V
67	B/W	Sensor ground	**[Engine is running]** ● **Warm-up condition** ● Idle speed	Approximately 0V
68	BR	Sensor power supply (Power steering pressure sensor)	**[Ignition switch: ON]**	Approximately 5V
69	R	Throttle position sensor 2	**[Ignition switch: ON]** ● Engine stopped ● Selector lever: D ● Accelerator pedal: Fully released	Less than 4.75V
			[Ignition switch: ON] ● Engine stopped ● Selector lever: D ● Accelerator pedal: Fully depressed	More than 0.36V
70	L/R	Refrigerant pressure sensor	**[Engine is running]** ● **Warm-up condition** ● Both A/C switch and blower switch are ON (Compressor operates)	1.0 - 4.0V
73	Y	Engine coolant temperature sensor	**[Engine is running]**	Approximately 0 - 4.8V Output voltage varies with engine coolant temperature.
74	LG/B	Heated oxygen sensor 2 (bank 1)	**[Engine is running]** ● **Warm-up condition** ● Revving engine from idle to 3,000 rpm quickly after the following conditions are met – After keeping the engine speed between 3,500 and 4,000 rpm for 1 minute and at idle for 1 minute under no load	0 - Approximately 1.0V
78	B/R	Sensor ground (Heated oxygen sensor)	**[Engine is running]** ● **Warm-up condition** ● Idle speed	Approximately 0V
79 80 81	SB GY OR	Ignition signal No. 6 Ignition signal No. 4 Ignition signal No. 2	**[Engine is running]** ● **Warm-up condition** ● Idle speed **NOTE:** The pulse cycle changes depending on rpm at idle	0 - 0.2V★ 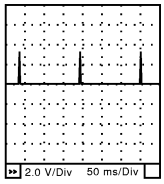 SEC986C
			[Engine is running] ● **Warm-up condition** ● Engine speed is 2,500 rpm	0.1 - 0.4V★ 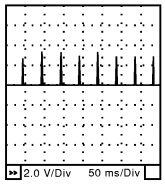 SEC987C

TER-MINAL NO.	WIRE COLOR	ITEM	CONDITION	DATA (DC Voltage)
82	B/W	Sensor ground (APP sensor 1, ASCD steering switch, ICC steering switch)	**[Engine is running]** ● **Warm-up condition** ● Idle speed	Approximately 0V
83	G/OR	Sensor ground (APP sensor 2)	**[Engine is running]** ● **Warm-up condition** ● Idle speed	Approximately 0V
85	PU	Data link connector	**[Ignition switch: ON]** ● CONSULT-II or GST is disconnected	Approximately 5V - Battery voltage (11 - 14V)
86	R	CAN communication line	**[Ignition switch: ON]**	Approximately 1.1 - 2.3V Output voltage varies with the communication status.
90	L/B	Sensor power supply (APP sensor 1)	**[Ignition switch: ON]**	Approximately 5V
91	G	Sensor power supply (APP sensor 2)	**[Ignition switch: ON]**	Approximately 5V
94	L	CAN communication line	**[Ignition switch: ON]**	Approximately 2.6 - 3.2V Output voltage varies with the communication status.
98	B/P	Accelerator pedal position sensor 2	**[Ignition switch: ON]** ● Engine stopped ● Accelerator pedal: Fully released	0.15 - 0.60V
			[Ignition switch: ON] ● Engine stopped ● Accelerator pedal: Fully depressed	1.95 - 2.40V
99	G/Y	ICC steering switch (models with ICC system)	**[Ignition switch: ON]** ● ICC steering switch: OFF	Approximately 4.3V
			[Ignition switch: ON] ● MAIN switch: Pressed	Approximately 0V
			[Ignition switch: ON] ● CANCEL switch: Pressed	Approximately 1.3V
			[Ignition switch: ON] ● RESUME/ACCELERATE switch: Pressed	Approximately 3.7V
			[Ignition switch: ON] ● SET/COAST switch: Pressed	Approximately 3.0V
			[Ignition switch: ON] ● DISTANCE switch: Pressed	Approximately 2.2V
99	G/Y	ASCD steering switch (models with ASCD system)	**[Ignition switch: ON]** ● ASCD steering switch: OFF	Approximately 4.0V
			[Ignition switch: ON] ● MAIN switch: Pressed	Approximately 0V
			[Ignition switch: ON] ● CANCEL switch: Pressed	Approximately 1.0V
			[Ignition switch: ON] ● RESUME/ACCELERATE switch: Pressed	Approximately 3.0V
			[Ignition switch: ON] ● SET/COAST switch: Pressed	Approximately 2.0V

TER-MINAL NO.	WIRE COLOR	ITEM	CONDITION	DATA (DC Voltage)
101	P/L	Stop lamp switch	**[Ignition switch: OFF]** ● Brake pedal: Fully released	Approximately 0V
			[Ignition switch: OFF] ● Brake pedal: Slightly depressed	BATTERY VOLTAGE (11 - 14V)
102	LG/B	PNP switch	**[Ignition switch: ON]** ● Selector lever: P or N	Approximately 0V
			[Ignition switch: ON] ● Except above position	BATTERY VOLTAGE (11 - 14V)
104	L/OR	Throttle control motor relay	**[Ignition switch: OFF]**	BATTERY VOLTAGE (11 - 14V)
			[Ignition switch: ON]	0 - 1.0V
106	R/B	Accelerator pedal position sensor 1	**[Ignition switch: ON]** ● Engine stopped ● Accelerator pedal: Fully released	0.5 - 1.0V
			[Ignition switch: ON] ● Engine stopped ● Accelerator pedal: Fully depressed	3.9 - 4.7V
107	PU/W	Fuel tank temperature sen-sor	**[Engine is running]**	Approximately 0 - 4.8V Output voltage varies with fuel tank temperature.
108	SB	ICC brake switch (models with ICC system) ASCD brake switch (models with ASCD system)	**[Ignition switch: ON]** ● Brake pedal: Slightly depressed	Approximately 0V
			[Ignition switch: ON] ● Brake pedal: Fully released	BATTERY VOLTAGE (11 - 14V)
109	W/L	Ignition switch	**[Ignition switch: OFF]**	0V
			[Ignition switch: ON]	BATTERY VOLTAGE (11 - 14V)
111	W/B	ECM relay (Self shut-off)	**[Engine is running]** **[Ignition switch: OFF]** ● For a few seconds after turning ignition switch OFF	0 - 1.5V
			[Ignition switch: OFF] ● More than a few seconds after turning igni-tion switch OFF	BATTERY VOLTAGE (11 - 14V)
113	GY/R	Fuel pump relay	**[Ignition switch: ON]** ● For 1 second after turning ignition switch ON **[Engine is running]**	0 - 1.5V
			[Ignition switch: ON] ● More than 1 second after turning ignition switch ON	BATTERY VOLTAGE (11 - 14V)
115 116	B/R B/W	ECM ground	**[Engine is running]** ● Idle speed	Body ground
117	R/Y	EVAP canister vent control valve	**[Ignition switch: ON]**	BATTERY VOLTAGE (11 - 14V)
119 120	R R	Power supply for ECM	**[Ignition switch: ON]**	BATTERY VOLTAGE (11 - 14V)
121	R/W	Power supply for ECM (Back-up)	**[Ignition switch: OFF]**	BATTERY VOLTAGE (11 - 14V)

★: Average voltage for pulse signal (Actual pulse signal can be confirmed by oscilloscope.)

CONSULT-II Function (ENGINE)

ABS006KX

FUNCTION

Diagnostic test mode	Function
Work support	This mode enables a technician to adjust some devices faster and more accurately by following the indications on the CONSULT-II unit.
Self-diagnostic results	Self-diagnostic results such as 1st trip DTC, DTCs and 1st trip freeze frame data or freeze frame data can be read and erased quickly.*
Data monitor	Input/Output data in the ECM can be read.
Data monitor (SPEC)	Input/Output of the specification for Basic fuel schedule, AFM, A/F feedback control value and the other data monitor items can be read.
CAN diagnostic support monitor	The results of transmit/receive diagnosis of CAN communication can be read.
Active test	Diagnostic Test Mode in which CONSULT-II drives some actuators apart from the ECMs and also shifts some parameters in a specified range.
Function test	This mode is used to inform customers when their vehicle condition requires periodic maintenance.
DTC & SRT confirmation	The status of system monitoring tests and the self-diagnosis status/result can be confirmed.
ECM part number	ECM part number can be read.

*: The following emission-related diagnostic information is cleared when the ECM memory is erased.

- Diagnostic trouble codes
- 1st trip diagnostic trouble codes
- Freeze frame data
- 1st trip freeze frame data
- System readiness test (SRT) codes
- Test values

ENGINE CONTROL COMPONENT PARTS/CONTROL SYSTEMS APPLICATION

Item			DIAGNOSTIC TEST MODE							
			WORK SUP-PORT	SELF-DIAGNOSTIC RESULTS		DATA MONI-TOR	DATA MONI-TOR (SPEC)	ACTIVE TEST	DTC & SRT CONFIRMATION	
				DTC*1	FREEZE FRAME DATA*2				SRT STATUS	DTC WORK SUP-PORT
ENGINE CONTROL COMPONENT PARTS	INPUT	Crankshaft position sensor (POS)		×	×	×	×			
		Camshaft position sensor (PHASE)		×	×	×	×			
		Mass air flow sensor		×		×	×			
		Engine coolant temperature sensor		×	×	×	×	×		
		Air fuel ratio (A/F) sensor 1		×		×	×		×	×
		Heated oxygen sensor 2		×		×	×		×	×
		Vehicle speed sensor		×	×	×	×			
		Accelerator pedal position sensor		×		×	×			
		Throttle position sensor		×		×	×			
		Fuel tank temperature sensor		×		×	×	×		
		EVAP control system pressure sensor		×		×	×			
		Intake air temperature sensor		×	×	×	×			
		Knock sensor		×						
		Refrigerant pressure sensor				×	×			
		Closed throttle position switch (accelerator pedal position sensor signal)				×	×			
		Air conditioner switch				×	×			
		Park/neutral position (PNP) switch		×		×	×			
		Stop lamp switch		×		×	×			
		Power steering pressure sensor		×		×	×			
		Battery voltage				×	×			
		Load signal				×	×			
		Fuel level sensor		×		×	×			
		ICC steering switch		×		×	×			
		ASCD steering switch		×		×	×			
		ICC brake switch		×		×	×			
		ASCD brake switch		×		×	×			
		Snow mode switch				×	×			

Item			DIAGNOSTIC TEST MODE							
			WORK SUP-PORT	SELF-DIAGNOSTIC RESULTS		DATA MONI-TOR	DATA MONI-TOR (SPEC)	ACTIVE TEST	DTC & SRT CONFIRMATION	
				DTC*1	FREEZE FRAME DATA*2				SRT STATUS	DTC WORK SUP-PORT
ENGINE CONTROL COMPONENT PARTS	OUTPUT	Fuel injector				×	×	×		
		Power transistor (Ignition timing)				×	×	×		
		Throttle control motor relay		×		×	×			
		Throttle control motor		×						
		EVAP canister purge volume control solenoid valve		×		×	×	×		×
		Air conditioner relay				×	×			
		Fuel pump relay	×			×	×	×		
		Cooling fan relay		×		×	×	×		
		Air fuel ratio (A/F) sensor 1 heater		×		×	×		×	
		Heated oxygen sensor 2 heater		×		×	×		×	
		EVAP canister vent control valve	×	×		×	×	×		
		Intake valve timing control solenoid valve		×		×	×	×		
		Calculated load value			×	×	×			

X: Applicable
*1: This item includes 1st trip DTCs.
*2: This mode includes 1st trip freeze frame data or freeze frame data. The items appear on CONSULT-II screen in freeze frame data mode only if a 1st trip DTC or DTC is detected. For details, refer to EC-136 .

INSPECTION PROCEDURE

CAUTION:

If CONSULT-II is used with no connection of CONSULT-II CONVERTER, malfunctions might be detected in self-diagnosis depending on control unit which carry out CAN communication.

1. Turn ignition switch OFF.
2. Connect CONSULT-II and CONSULT-II CONVERTER to data link connector, which is located under LH dash panel near the hood opener handle.
3. Turn ignition switch ON.

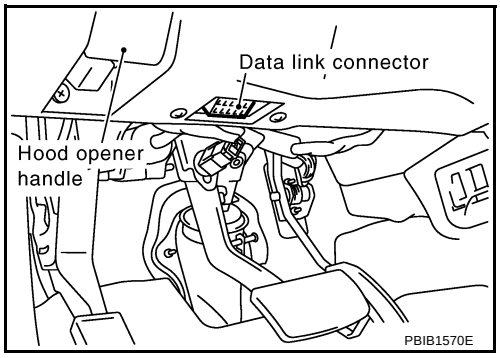

4. Touch “START (NISSAN BASED VHCL)”.

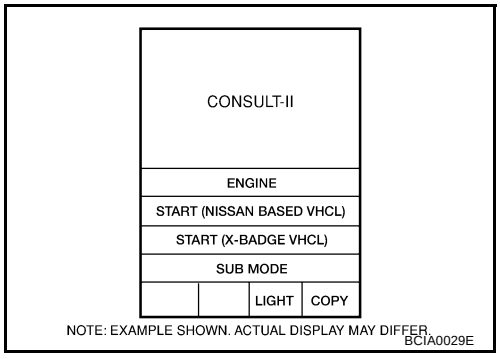

5. Touch “ENGINE”.
If “ENGINE” is not indicated, go to GI-39, "CONSULT-II Data Link Connector (DLC) Circuit" .

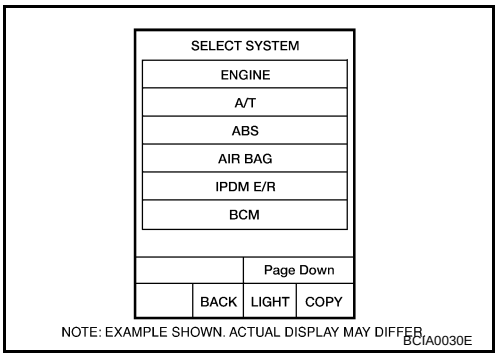

6. Perform each diagnostic test mode according to each service procedure.

For further information, see the CONSULT-II Operation Manual.

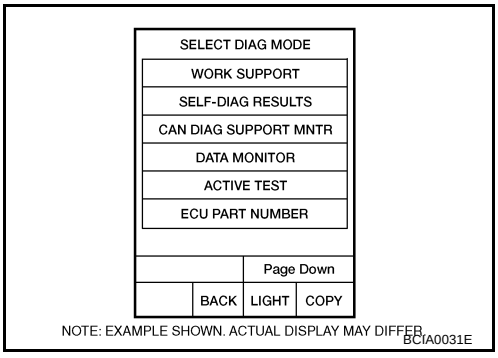

WORK SUPPORT MODE

Work Item

WORK ITEM	CONDITION	USAGE
FUEL PRESSURE RELEASE	● FUEL PUMP WILL STOP BY TOUCHING “START” DURING IDLING. CRANK A FEW TIMES AFTER ENGINE STALLS.	When releasing fuel pressure from fuel line
IDLE AIR VOL LEARN	● THE IDLE AIR VOLUME THAT KEEPS THE ENGINE WITHIN THE SPECIFIED RANGE IS MEMORIZED IN ECM.	When learning the idle air volume
SELF-LEARNING CONT	● THE COEFFICIENT OF SELF-LEARNING CONTROL MIXTURE RATIO RETURNS TO THE ORIGINAL COEFFICIENT.	When clearing the coefficient of self-learning control value
EVAP SYSTEM CLOSE	CLOSE THE EVAP CANISTER VENT CONTROL VALVE IN ORDER TO MAKE EVAP SYSTEM CLOSE UNDER THE FOLLOWING CONDITIONS. ● IGN SW ON ● ENGINE NOT RUNNING ● AMBIENT TEMPERATURE IS ABOVE 0°C (32°F). ● NO VACUUM AND NO HIGH PRESSURE IN EVAP SYSTEM ● FUEL TANK TEMP. IS MORE THAN 0°C (32°F). ● WITHIN 10 MINUTES AFTER STARTING “EVAP SYSTEM CLOSE” ● WHEN TRYING TO EXECUTE “EVAP SYSTEM CLOSE” UNDER THE CONDITION EXCEPT ABOVE, CONSULT-II WILL DISCONTINUE IT AND DISPLAY APPROPRIATE INSTRUCTION. **NOTE:** **WHEN STARTING ENGINE, CONSULT-II MAY DISPLAY “BATTERY VOLTAGE IS LOW. CHARGE BATTERY”, EVEN IN USING CHARGED BATTERY.**	When detecting EVAP vapor leak point of EVAP system
VIN REGISTRATION	● IN THIS MODE VIN IS REGISTERED IN ECM	When registering VIN is ECM

WORK ITEM	CONDITION	USAGE
TARGET IDLE RPM ADJ*	● IDLE CONDITION	When setting target idle speed
TARGET IGN TIM ADJ*	● IDLE CONDITION	When adjusting target ignition timing

*: This function is not necessary in the usual service procedure.

SELF-DIAG RESULTS MODE

Self Diagnostic Item

Regarding items of DTC and 1st trip DTC, refer to EC-15, "INDEX FOR DTC" .

Freeze Frame Data and 1st Trip Freeze Frame Data

Freeze frame data item*	Description
DIAG TROUBLE CODE [PXXXX]	● The engine control component part/control system has a trouble code, it is displayed as “PXXXX”. (Refer to EC-15, "INDEX FOR DTC" .)
FUEL SYS-B1	● “Fuel injection system status” at the moment a malfunction is detected is displayed.
FUEL SYS-B2	● One mode in the following is displayed. “Mode2”: Open loop due to detected system malfunction “Mode3”: Open loop due to driving conditions (power enrichment, deceleration enleanment) “Mode4”: Closed loop - using oxygen sensor(s) as feedback for fuel control “Mode5”: Open loop - has not yet satisfied condition to go to closed loop
CAL/LD VALUE [%]	● The calculated load value at the moment a malfunction is detected is displayed.
COOLANT TEMP [°C] or [°F]	● The engine coolant temperature at the moment a malfunction is detected is displayed.
L-FUEL TRM-B1 [%]	● “Long-term fuel trim” at the moment a malfunction is detected is displayed. ● The long-term fuel trim indicates much more gradual feedback compensation to the base fuel schedule than short-term fuel trim.
L-FUEL TRM-B2 [%]	
S-FUEL TRM-B1 [%]	● “Short-term fuel trim” at the moment a malfunction is detected is displayed. ● The short-term fuel trim indicates dynamic or instantaneous feedback compensation to the base fuel schedule.
S-FUEL TRM-B2 [%]	
ENGINE SPEED [rpm]	● The engine speed at the moment a malfunction is detected is displayed.
VEHICL SPEED [km/h] or [mph]	● The vehicle speed at the moment a malfunction is detected is displayed.
B/FUEL SCHDL [msec]	● The base fuel schedule at the moment a malfunction is detected is displayed.
INT/A TEMP SE [°C] or [°F]	● The intake air temperature at the moment a malfunction is detected is displayed.

*: The items are the same as those of 1st trip freeze frame data.

DATA MONITOR MODE
Monitored Item

×: Applicable

Monitored item [Unit]	ECM INPUT SIG-NALS	MAIN SIG-NALS	Description	Remarks
ENG SPEED [rpm]	×	×	● Indicates the engine speed computed from the signal of the crankshaft position sensor (POS) and camshaft position sensor (PHASE).	● Accuracy becomes poor if engine speed drops below the idle rpm. ● If the signal is interrupted while the engine is running, an abnormal value may be indicated.
MAS A/F SE-B1 [V]	×	×	● The signal voltage of the mass air flow sensor is displayed.	● When the engine is stopped, a certain value is indicated.
B/FUEL SCHDL [msec]		×	● Base fuel schedule indicates the fuel injection pulse width programmed into ECM, prior to any learned on board correction.	
A/F ALPHA-B1 [%]		×	● The mean value of the air-fuel ratio feedback correction factor per cycle is indicated.	● When the engine is stopped, a certain value is indicated. ● This data also includes the data for the air-fuel ratio learning control.
A/F ALPHA-B2 [%]		×		
COOLAN TEMP/S [°C] or [°F]	×	×	● The engine coolant temperature (determined by the signal voltage of the engine coolant temperature sensor) is displayed.	● When the engine coolant temperature sensor is open or short-circuited, ECM enters fail-safe mode. The engine coolant temperature determined by the ECM is displayed.
A/F SEN1 (B1) [V]	×	×	● The A/F signal computed from the input signal of the Air fuel ratio (A/F) sensor 1 is displayed.	
A/F SEN1 (B2) [V]	×			
HO2S2 (B1) [V]	×		● The signal voltage of the heated oxygen sensor 2 is displayed.	
HO2S2 (B2) [V]	×			
HO2S2 MNTR (B1) [RICH/LEAN]	×		● Display of heated oxygen sensor 2 signal: RICH: means the amount of oxygen after three way catalyst is relatively small. LEAN: means the amount of oxygen after three way catalyst is relatively large.	● When the engine is stopped, a certain value is indicated.
HO2S2 MNTR (B2) [RICH/LEAN]	×			
VHCL SPEED SE [km/h] or [mph]	×	×	● The vehicle speed computed from the vehicle speed signal sent from combination meter is displayed.	
BATTERY VOLT [V]	×	×	● The power supply voltage of ECM is displayed.	
ACCEL SEN 1 [V]	×	×	● The accelerator pedal position sensor signal voltage is displayed.	● ACCEL SEN2 signal is converted by ECM internally. Thus, it differs from ECM terminal voltage signal.
ACCEL SEN 2 [V]	×			
THRTL SEN 1 [V]	×	×	● The throttle position sensor signal voltage is displayed.	● THRTL SEN2 signal is converted by ECM internally. Thus, it differs from ECM terminal voltage signal.
THRTL SEN 2 [V]	×			
FUEL T/TEMP SE [°C] or [°F]	×		● The fuel temperature (determined by the signal voltage of the fuel tank temperature sensor) is displayed.	
INT/A TEMP SE [°C] or [°F]	×	×	● The intake air temperature (determined by the signal voltage of the intake air temperature sensor) is indicated.	
EVAP SYS PRES [V]	×		● The signal voltage of EVAP control system pressure sensor is displayed.	

Monitored item [Unit]	ECM INPUT SIG-NALS	MAIN SIG-NALS	Description	Remarks
FUEL LEVEL SE [V]	×		● The signal voltage of the fuel level sensor is displayed.	
START SIGNAL [ON/OFF]	×	×	● Indicates start signal status [ON/OFF] computed by the ECM according to the signals of engine speed and battery voltage.	● After starting the engine, [OFF] is displayed regardless of the starter signal.
CLSD THL POS [ON/OFF]	×	×	● Indicates idle position [ON/OFF] computed by ECM according to the accelerator pedal position sensor signal.	
AIR COND SIG [ON/OFF]	×	×	● Indicates [ON/OFF] condition of the air conditioner switch as determined by the air conditioner signal.	
P/N POSI SW [ON/OFF]	×	×	● Indicates [ON/OFF] condition from the park/neutral position (PNP) switch signal.	
PW/ST SIGNAL [ON/OFF]	×	×	● [ON/OFF] condition of the power steering system (determined by the signal voltage of the power steering pressure sensor signal) is indicated.	
LOAD SIGNAL [ON/OFF]	×	×	● Indicates [ON/OFF] condition from the electrical load signal. ON: Rear window defogger switch is ON and/or lighting switch is in 2nd position. OFF: Both rear window defogger switch and lighting switch are OFF.	
SNOW MODE SW [ON/OFF]			● Indicates [ON/OFF] condition from the snow mode switch signal.	
IGNITION SW [ON/OFF]	×		● Indicates [ON/OFF] condition from ignition switch signal.	
HEATER FAN SW [ON/OFF]	×		● Indicates [ON/OFF] condition from the heater fan switch signal.	
BRAKE SW [ON/OFF]	×		● Indicates [ON/OFF] condition from the stop lamp switch signal.	
INJ PULSE-B1 [msec]		×	● Indicates the actual fuel injection pulse width compensated by ECM according to the input signals.	● When the engine is stopped, a certain computed value is indicated.
INJ PULSE-B2 [msec]				
IGN TIMING [BTDC]		×	● Indicates the ignition timing computed by ECM according to the input signals.	● When the engine is stopped, a certain value is indicated.
CAL/LD VALUE [%]			● Calculated load value indicates the value of the current air flow divided by peak air flow.	
MASS AIRFLOW [g·m/s]			● Indicates the mass air flow computed by ECM according to the signal voltage of the mass air flow sensor.	
PURG VOL C/V [%]			● Indicates the EVAP canister purge volume control solenoid valve control value computed by the ECM according to the input signals. ● The opening becomes larger as the value increases.	
INT/V TIM (B1) [°CA]			● Indicates [°CA] of intake camshaft advanced angle.	
INT/V TIM (B2) [°CA]				

Monitored item [Unit]	ECM INPUT SIG-NALS	MAIN SIG-NALS	Description	Remarks
INT/V SOL (B1) [%]			● The control condition of the intake valve timing control solenoid valve (determined by ECM according to the input signals) is indicated. ● The advance angle becomes larger as the value increases.	
INT/V SOL (B2) [%]				
AIR COND RLY [ON/OFF]		×	● The air conditioner relay control condition (determined by ECM according to the input signals) is indicated.	
FUEL PUMP RLY [ON/OFF]		×	● Indicates the fuel pump relay control condition determined by ECM according to the input signals.	
VENT CONT/V [ON/OFF]			● The control condition of the EVAP canister vent control valve (determined by ECM according to the input signals) is indicated. ON: Closed OFF: Open	
THRTL RELAY [ON/OFF]		×	● Indicates the throttle control motor relay control condition determined by the ECM according to the input signals.	
COOLING FAN [HI/MID/LOW/OFF]		×	● The control condition of the cooling fan (determined by ECM according to the input signals) is indicated. HI: High speed operation MID: Middle speed operation LOW: Low speed operation OFF: Stop	
HO2S2 HTR (B1) [ON/OFF]			● Indicates [ON/OFF] condition of heated oxygen sensor 2 heater determined by ECM according to the input signals.	
HO2S2 HTR (B2) [ON/OFF]				
I/P PULLY SPD [rpm]			● Indicates the engine speed computed from the turbine revolution sensor signal.	
VEHICLE SPEED [km/h] or [MPH]			● Indicates the vehicle speed computed from the revolution sensor signal.	
IDL A/V LEARN [YET/CMPLT]			● Display the condition of idle air volume learning YET: Idle Air Volume Learning has not been performed yet. CMPLT: Idle Air Volume Learning has already been performed successfully.	
TRVL AFTER MIL [km] or [mile]			● Distance traveled while MIL is activated.	
A/F S1 HTR (B1) [%]			● Air fuel ratio (A/F) sensor 1 heater control value computed by ECM according to the input signals. ● The current flow to the heater becomes larger as the value increases.	
A/F S1 HTR (B2) [%]				
AC PRESS SEN [V]			● The signal voltage from the refrigerant pressure sensor is displayed.	
VHCL SPEED SE [km/h] or [mph]			● The vehicle speed computed from the vehicle speed signal sent from TCM is displayed.	

Monitored item [Unit]	ECM INPUT SIG-NALS	MAIN SIG-NALS	Description	Remarks
SET VHCL SPD [km/h] or [mph]			● The preset vehicle speed is displayed.	
MAIN SW [ON/OFF]			● Indicates [ON/OFF] condition from MAIN switch signal.	
CANCEL SW [ON/OFF]			● Indicates [ON/OFF] condition from CANCEL switch signal.	
RESUME/ACC SW [ON/OFF]			● Indicates [ON/OFF] condition from RESUME/ ACCELERATE switch signal.	
SET SW [ON/OFF]			● Indicates [ON/OFF] condition from SET/ COAST switch signal.	
BRAKE SW1 [ON/OFF]			● Indicates [ON/OFF] condition from ASCD brake switch signal.	
BRAKE SW2 [ON/OFF]			● Indicates [ON/OFF] condition of stop lamp switch signal.	
VHCL SPD CUT [NON/CUT]			● Indicates the vehicle cruise condition. NON: Vehicle speed is maintained at the ASCD set speed. CUT: Vehicle speed increased to excessively high compared with the ASCD set speed, and ASCD operation is cut off.	
LO SPEED CUT [NON/CUT]			● Indicates the vehicle cruise condition. NON: Vehicle speed is maintained at the ASCD set speed. CUT: Vehicle speed decreased to excessively low compared with the ASCD set speed, and ASCD operation is cut off.	
AT OD MONITOR [ON/OFF]			● Indicates [ON/OFF] condition of A/T O/D according to the input signal from the TCM.	
AT OD CANCEL [ON/OFF]			● Indicates [ON/OFF] condition of A/T O/D can-cel signal sent from the TCM.	
DIST SW [ON/OFF]			● Indicates [ON/OFF] condition from DIS-TANCE switch signal.	
CRUISE LAMP [ON/OFF]			● Indicates [ON/OFF] condition of CRUISE lamp determined by the ECM according to the input signals.	
SET LAMP [ON/OFF]			● Indicates [ON/OFF] condition of SET lamp determined by the ECM according to the input signals.	
Voltage [V]			● Voltage, frequency, duty cycle or pulse width measured by the probe.	● Only # is displayed if item is unable to be measured. ● Figures with #s are temporary ones. They are the same figures as an actual piece of data which was just previously measured.
Frequency [msec], [Hz] or [%]				
DUTY-HI				
DUTY-LOW				
PLS WIDTH-HI				
PLS WIDTH-LOW				

NOTE:
Any monitored item that does not match the vehicle being diagnosed is deleted from the display automatically.

DATA MONITOR (SPEC) MODE

Monitored Item

Monitored item [Unit]	ECM input signals	Main signals	Description	Remarks
ENG SPEED [rpm]	×	×	● Indicates the engine speed computed from the signal of the crankshaft position sensor (POS) and camshaft position sensor (PHASE).	
MAS A/F SE-B1 [V]	×	×	● The signal voltage of the mass air flow sensor specification is displayed.	● When engine is running specification range is indicated.
B/FUEL SCHDL [msec]		×	● Base fuel schedule indicates the fuel injection pulse width programmed into ECM, prior to any learned on board correction.	● When engine is running specification range is indicated.
A/F ALPHA-B1 [%] A/F ALPHA-B2 [%]		×	● The mean value of the air-fuel ratio feedback correction factor per cycle is indicated.	● When engine is running specification range is indicated. ● This data also includes the data for the air-fuel ratio learning control.

NOTE:
Any monitored item that does not match the vehicle being diagnosed is deleted from the display automatically.

ACTIVE TEST MODE

Test Item

TEST ITEM	CONDITION	JUDGEMENT	CHECK ITEM (REMEDY)
FUEL INJECTION	● Engine: Return to the original trouble condition ● Change the amount of fuel injection using CONSULT-II.	If trouble symptom disappears, see CHECK ITEM.	● Harness and connectors ● Fuel injector ● Air fuel ratio (A/F) sensor 1
IGNITION TIMING	● Engine: Return to the original trouble condition ● Timing light: Set ● Retard the ignition timing using CONSULT-II.	If trouble symptom disappears, see CHECK ITEM.	● Perform Idle Air Volume Learning.
POWER BALANCE	● Engine: After warming up, idle the engine. ● A/C switch: OFF ● Shift lever: P or N ● Cut off each injector signal one at a time using CONSULT-II.	Engine runs rough or dies.	● Harness and connectors ● Compression ● Fuel injector ● Power transistor ● Spark plug ● Ignition coil
COOLING FAN*	● Ignition switch: ON ● Turn the cooling fan HI, MID, LOW and OFF using CONSULT-II.	Cooling fan moves and stops.	● Harness and connectors ● Cooling fan motor ● IPDM E/R
ENG COOLANT TEMP	● Engine: Return to the original trouble condition ● Change the engine coolant temperature using CONSULT-II.	If trouble symptom disappears, see CHECK ITEM.	● Harness and connectors ● Engine coolant temperature sensor ● Fuel injector
FUEL PUMP RELAY	● Ignition switch: ON (Engine stopped) ● Turn the fuel pump relay ON and OFF using CONSULT-II and listen to operating sound.	Fuel pump relay makes the operating sound.	● Harness and connectors ● Fuel pump relay

TEST ITEM	CONDITION	JUDGEMENT	CHECK ITEM (REMEDY)
PURG VOL CONT/V	● Engine: After warming up, run engine at 1,500 rpm. ● Change the EVAP canister purge volume control solenoid valve opening percent using CONSULT-II.	Engine speed changes according to the opening percent.	● Harness and connectors ● Solenoid valve
FUEL/T TEMP SEN	● Change the fuel tank temperature using CONSULT-II.		
VENT CONTROL/V	● Ignition switch: ON (Engine stopped) ● Turn solenoid valve ON and OFF with the CONSULT-II and listen to operating sound.	Solenoid valve makes an operating sound.	● Harness and connectors ● Solenoid valve
V/T ASSIGN ANGLE	● Engine: Return to the original trouble condition ● Change intake valve timing using CONSULT-II.	If trouble symptom disappears, see CHECK ITEM.	● Harness and connectors ● Intake valve timing control solenoid valve

*: Leaving cooling fan OFF with CONSULT-II while engine is running may cause the engine to overheat.

DTC & SRT CONFIRMATION MODE

SRT STATUS Mode

For details, refer to EC-60, "SYSTEM READINESS TEST (SRT) CODE" .

SRT Work Support Mode

This mode enables a technician to drive a vehicle to set the SRT while monitoring the SRT status.

DTC Work Support Mode

Test mode	Test item	Condition	Reference page
EVAPORATIVE SYSTEM	PURG FLOW P0441	Refer to corresponding trouble diagnosis for DTC.	EC-322
	EVP SML LEAK P0442/P1442*		EC-327
	EVP V/S LEAK P0456/P1456*		EC-375
	PURG VOL CN/V P1444		EC-560
A/F SEN1	A/F SEN1 (B1) P1276		EC-526
	A/F SEN1 (B1) P1278/1279		EC-536, EC-548
	A/F SEN1 (B2) P1286		EC-526
	A/F SEN1 (B2) P1288/1289		EC-536, EC-548
HO2S2	HO2S2 (B1) P0139		EC-237
	HO2S2 (B1) P1146		EC-442
	HO2S2 (B1) P1147		EC-453
	HO2S2 (B2) P0159		EC-237
	HO2S2 (B2) P1166		EC-442
	HO2S2 (B2) P1167		EC-453

*: DTC P1442 and P1456 does not apply to S50 models but appears in DTC Work Support Mode screens.

REAL TIME DIAGNOSIS IN DATA MONITOR MODE (RECORDING VEHICLE DATA)

Description

CONSULT-II has two kinds of triggers and they can be selected by touching “SETTING” in “DATA MONITOR” mode.

1. “AUTO TRIG” (Automatic trigger):
   - The malfunction will be identified on the CONSULT-II screen in real time.
     In other words, DTC/1st trip DTC and malfunction item will be displayed if the malfunction is detected by ECM.
     At the moment a malfunction is detected by ECM, “MONITOR” in “DATA MONITOR” screen is changed to “Recording Data ... xx%” as shown at right, and the data after the malfunction detection is recorded. Then when the percentage reached 100%, “REAL-TIME DIAG” screen is displayed. If “STOP” is touched on the screen during “Recording Data ... xx%”, “REAL-TIME DIAG” screen is also displayed.
     The recording time after the malfunction detection and the recording speed can be changed by “TRIGGER POINT” and “Recording Speed”. Refer to CONSULT-II Operation Manual.
2. “MANU TRIG” (Manual trigger):
   - DTC/1st trip DTC and malfunction item will not be displayed automatically on CONSULT-II screen even though a malfunction is detected by ECM.
     DATA MONITOR can be performed continuously even though a malfunction is detected.

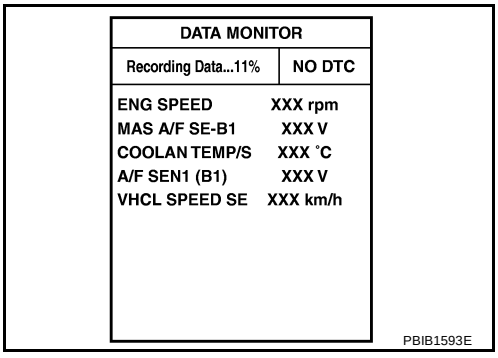

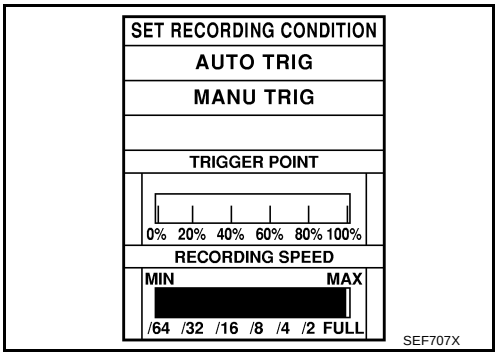

Operation

1. “AUTO TRIG”
   - While trying to detect the DTC/1st trip DTC by performing the DTC Confirmation Procedure, be sure to select to “DATA MONITOR (AUTO TRIG)” mode. You can confirm the malfunction at the moment it is detected.
   - While narrowing down the possible causes, CONSULT-II should be set in “DATA MONITOR (AUTO TRIG)” mode, especially in case the incident is intermittent.
     When you are inspecting the circuit by gently shaking (or twisting) the suspicious connectors, components and harness in the DTC Confirmation Procedure, the moment a malfunction is found the DTC/1st trip DTC will be displayed. (Refer to “INCIDENT SIMULATION TESTS” in GI-27, "How to Perform Efficient Diagnosis for an Electrical Incident" .)
2. “MANU TRIG”
   - If the malfunction is displayed as soon as “DATA MONITOR” is selected, reset CONSULT-II to “MANU TRIG”. By selecting “MANU TRIG” you can monitor and store the data. The data can be utilized for further diagnosis, such as a comparison with the value for the normal operating condition.

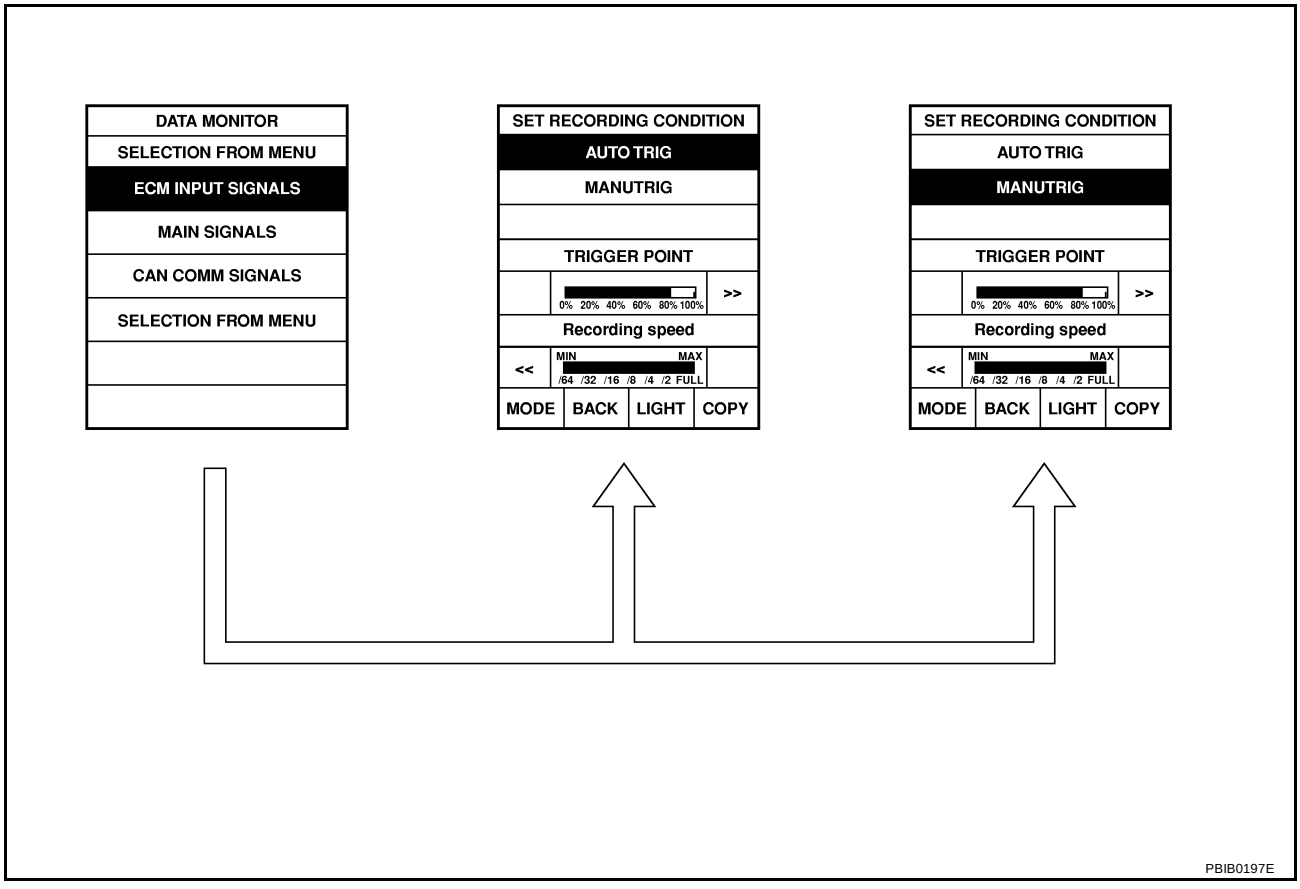

Generic Scan Tool (GST) Function

ABS006KY

DESCRIPTION

Generic Scan Tool (OBDII scan tool) complying with SAE J1978 has 8 different functions explained below.
ISO9141 is used as the protocol.
The name GST or Generic Scan Tool is used in this service manual.

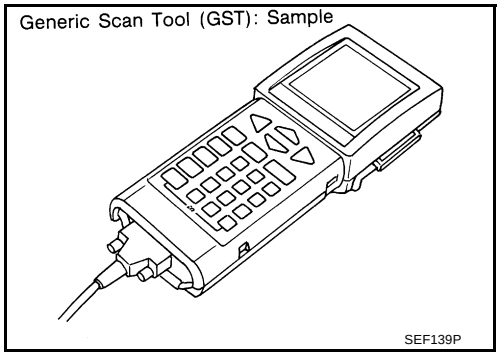

FUNCTION

Diagnostic test mode		Function
Service $01	READINESS TESTS	This diagnostic service gains access to current emission-related data values, including analog inputs and outputs, digital inputs and outputs, and system status information.
Service $02	(FREEZE DATA)	This diagnostic service gains access to emission-related data value which were stored by ECM during the freeze frame. For details, refer to EC-59, "FREEZE FRAME DATA AND 1ST TRIP FREEZE FRAME DATA" .
Service $03	DTCs	This diagnostic service gains access to emission-related power train trouble codes which were stored by ECM.
Service $04	CLEAR DIAG INFO	This diagnostic service can clear all emission-related diagnostic information. This includes: ● Clear number of diagnostic trouble codes (Service $01) ● Clear diagnostic trouble codes (Service $03) ● Clear trouble code for freeze frame data (Service $01) ● Clear freeze frame data (Service $02) ● Reset status of system monitoring test (Service $01) ● Clear on board monitoring test results (Service $06 and $07)
Service $06	(ON BOARD TESTS)	This diagnostic service accesses the results of on board diagnostic monitoring tests of specific components/systems that are not continuously monitored.
Service $07	(ON BOARD TESTS)	This diagnostic service enables the off board test drive to obtain test results for emission-related powertrain components/systems that are continuously monitored during normal driving conditions.
Service $08	—	This diagnostic service can close EVAP system in ignition switch ON position (Engine stopped). When this diagnostic service is performed, EVAP canitser vent control valve can be closed. In the following conditions, this mode cannot function. ● Low ambient temperature ● Low battery voltage ● Engine running ● Ignition switch OFF ● Low fuel temperature ● Too much pressure is applied to EVAP system
Service $09	(CALIBRATION ID)	This diagnostic service enables the off-board test device to request specific vehicle information such as Vehicle Identification Number (VIN) and Calibration IDs.

INSPECTION PROCEDURE

1. Turn ignition switch OFF.
2. Connect GST to data link connector, which is located under LH dash panel near the hood opener handle.

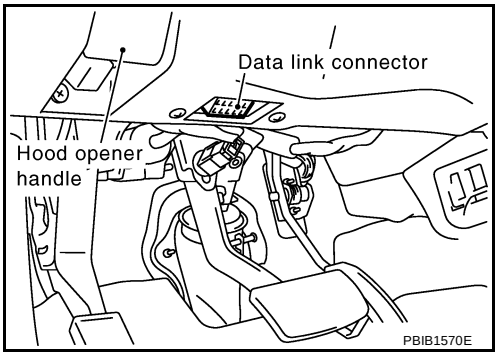

3. Turn ignition switch ON.
4. Enter the program according to instruction on the screen or in the operation manual.
   (*: Regarding GST screens in this section, sample screens are shown.)

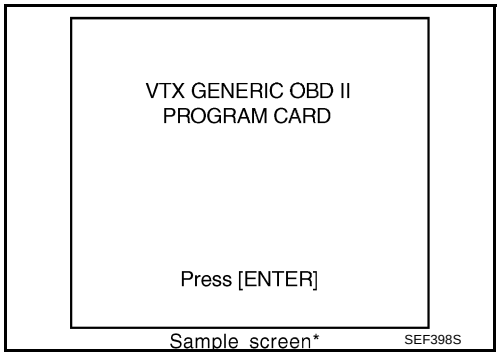

5. Perform each diagnostic mode according to each service procedure.
   For further information, see the GST Operation Manual of the tool maker.

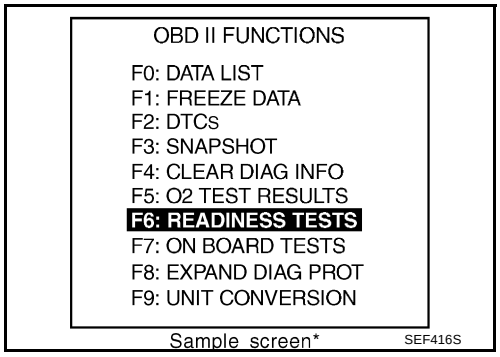

CONSULT-II Reference Value in Data Monitor

ABS006KZ

Remarks:
- Specification data are reference values.
- Specification data are output/input values which are detected or supplied by the ECM at the connector.
  * Specification data may not be directly related to their components signals/values/operations.
  i.e. Adjust ignition timing with a timing light before monitoring IGN TIMING, because the monitor may show the specification data in spite of the ignition timing not being adjusted to the specification data. This IGN TIMING monitors the data calculated by the ECM according to the signals input from the camshaft position sensor and other ignition timing related sensors.

MONITOR ITEM	CONDITION		SPECIFICATION
ENG SPEED	● Run engine and compare CONSULT-II value with the tachometer indication.		Almost the same speed as the tachometer indication.
MAS A/F SE-B1	See EC-153, "TROUBLE DIAGNOSIS - SPECIFICATION VALUE" .		
B/FUEL SCHDL	See EC-153, "TROUBLE DIAGNOSIS - SPECIFICATION VALUE" .		
A/F ALPHA-B1 A/F ALPHA-B2	See EC-153, "TROUBLE DIAGNOSIS - SPECIFICATION VALUE" .		
COOLAN TEMP/S	● Engine: After warming up		More than 70°C (158°F)
A/F SEN1 (B1) A/F SEN1 (B2)	● Engine: After warming up	Maintaining engine speed at 2,000 rpm	Fluctuates around 1.5 V
HO2S2 (B1) HO2S2 (B2)	● Warm-up condition ● After keeping engine speed between 3,500 and 4,000 rpm for 1 minute and at idle for 1 minute under no load.	Revving engine from idle to 3,000 rpm quickly	0 - 0.3V ←→ Approx. 0.6 - 1.0V
HO2S2 MNTR (B1) HO2S2 MNTR (B2)	● Warm-up condition ● After keeping engine speed between 3,500 and 4,000 rpm for 1 minute and at idle for 1 minute under no load.	Revving engine from idle to 3,000 rpm quickly	LEAN ←→ RICH
VHCL SPEED SE	● Turn drive wheels and compare CONSULT-II value with the speedometer indication.		Almost the same speed as the speedometer indication
BATTERY VOLT	● Ignition switch: ON (Engine stopped)		11 - 14V
ACCEL SEN 1	● Ignition switch: ON (Engine stopped)	Accelerator pedal: Fully released	0.5 - 1.0V
		Accelerator pedal: Fully depressed	4.0 - 4.8V
ACCEL SEN 2*	● Ignition switch: ON (Engine stopped)	Accelerator pedal: Fully released	0.3 - 1.2V
		Accelerator pedal: Fully depressed	3.9 - 4.8V
THRTL SEN 1 THRTL SEN 2*	● Ignition switch: ON (Engine stopped) ● Selector lever: D	Accelerator pedal: Fully released	More than 0.36V
		Accelerator pedal: Fully depressed	Less than 4.75V
EVAP SYS PRES	● Ignition switch: ON		Approx. 1.8 - 4.8V
START SIGNAL	● Ignition switch: ON → START → ON		OFF → ON → OFF
CLSD THL POS	● Ignition switch: ON (Engine stopped)	Accelerator pedal: Fully released	ON
		Accelerator pedal: Slightly depressed	OFF
AIR COND SIG	● Engine: After warming up, idle the engine	Air conditioner switch: OFF	OFF
		Air conditioner switch: ON (Compressor operates.)	ON
P/N POSI SW	● Ignition switch: ON	Shift lever: P or N	ON
		Shift lever: Except above	OFF
PW/ST SIGNAL	● Engine: After warming up, idle the engine	Steering wheel: Not being turned (Forward direction)	OFF
		Steering wheel: Being turned.	ON

MONITOR ITEM	CONDITION		SPECIFICATION
LOAD SIGNAL	● Ignition switch: ON	Rear window defogger switch is ON and/or lighting switch is in 2nd	ON
		Rear window defogger switch is OFF and lighting switch is OFF	OFF
SNOW MODE SW	● Ignition switch: ON	Snow mode switch: ON	ON
		Snow mode switch: OFF	OFF
IGNITION SW	● Ignition switch: ON → OFF → ON		ON → OFF → ON
HEATER FAN SW	● Engine: After warming up, idle the engine	Heater fan: Operating.	ON
		Heater fan: Not operating	OFF
BRAKE SW	● Ignition switch: ON	Brake pedal: Fully released	OFF
		Brake pedal: Slightly depressed	ON
INJ PULSE-B1 INJ PULSE-B2	● Engine: After warming up ● Selector lever: P or N ● Air conditioner switch: OFF ● No-load	Idle	2.0 - 3.0 msec
		2,000 rpm	1.9 - 2.9 msec
IGN TIMING	● Engine: After warming up ● Selector lever: P or N ● Air conditioner switch: OFF ● No-load	Idle	13° - 18° BTDC
		2,000 rpm	25° - 45° BTDC
CAL/LD VALUE	● Engine: After warming up ● Selector lever: P or N ● Air conditioner switch: OFF ● No-load	Idle	5% - 35%
		2,500 rpm	5% - 35%
MASS AIRFLOW	● Engine: After warming up ● Selector lever: P or N ● Air conditioner switch: OFF ● No-load	Idle	2.0 - 6.0 g·m/s
		2,500 rpm	7.0 - 20.0 g·m/s
PURG VOL C/V	● Engine: After warming up ● Selector lever: P or N ● Air conditioner switch: OFF ● No-load	Idle (Accelerator pedal is not depressed even slightly, after engine starting)	0%
		2,000 rpm	—
INT/V TIM (B1) INT/V TIM (B2)	● Engine: After warming up ● Selector lever: P or N ● Air conditioner switch: OFF ● No-load	Idle	–5° - 5°CA
		When revving engine up to 2,000 rpm quickly	Approx. 0° - 30°CA
INT/V SOL (B1) INT/V SOL (B2)	● Engine: After warming up ● Selector lever: P or N ● Air conditioner switch: OFF ● No-load	Idle	0% - 2%
		When revving engine up to 2,000 rpm quickly	Approx. 0% - 50%
AIR COND RLY	● Engine: After warming up, idle the engine	Air conditioner switch: OFF	OFF
		Air conditioner switch: ON (Compressor operates)	ON
FUEL PUMP RLY	● For 1 second after turning ignition switch ON ● Engine running or cranking		ON
	● Except above conditions		OFF
VENT CONT/V	● Ignition switch: ON		OFF
THRTL RELAY	● Ignition switch: ON		ON

MONITOR ITEM	CONDITION		SPECIFICATION
COOLING FAN	● Engine: After warming up, idle the engine ● Air conditioner switch: OFF	Engine coolant temperature is 94°C (201°F) or less	OFF
		Engine coolant temperature is between 95°C (203°F) and 99°C (210°F)	LOW
		Engine coolant temperature is between 100°C (212°F) and 104°C (219°F)	MID
		Engine coolant temperature is 105°C (221°F) or more	HI
HO2S2 HTR (B1) HO2S2 HTR (B2)	● Engine speed is below 3,600 rpm after the following conditions are met. – Engine: After warming up – Keeping the engine speed between 3,500 and 4,000 rpm for 1 minute and at idle for 1 minute under no load		ON
	● Engine speed: Above 3,600 rpm		OFF
I/P PULLY SPD	● Vehicle speed: More than 20 km/h (12 MPH)		Almost the same speed as the speedometer indication
VEHICLE SPEED	● Turn drive wheels and compare the CONSULT-II value with speedometer indication.		Almost the same speed as the speedometer indication
TRVL AFTER MIL	● Ignition switch: ON	Vehicle has traveled after MIL has turned ON.	0 - 65,535 km (0 - 40,723 mile)
A/F S1 HTR (B1) A/F S1 HTR (B2)	● Engine: After warming up, idle the engine		0 - 100%
AC PRESS SEN	● Ignition switch: ON (Engine stopped)		Approx. 0V
	● Engine: Idle ● Air conditioner switch: ON		1.0 - 4.0V
VHCL SPEED SE	● Turn drive wheels and compare speedometer indication with the CONSULT-II value.		Almost the same speed as the CONSULT-II value
SET VHCL SPD	● Engine: Running	ASCD: Operating.	The preset vehicle speed is displayed.
MAIN SW	● Ignition switch: ON	MAIN switch: Pressed	ON
		MAIN switch: Released	OFF
CANCEL SW	● Ignition switch: ON	CANCEL switch: Pressed	ON
		CANCEL switch: Released	OFF
RESUME/ACC SW	● Ignition switch: ON	RESUME/ACCELERATE switch: Pressed	ON
		RESUME/ACCELERATE switch: Released	OFF
SET SW	● Ignition switch: ON	SET/COAST switch: Pressed	ON
		SET/COAST switch: Released	OFF
BRAKE SW1	● Ignition switch: ON	Brake pedal: Fully released	ON
		Brake pedal: Slightly depressed	OFF
BRAKE SW2	● Ignition switch: ON	Brake pedal: Fully released	OFF
		Brake pedal: Slightly depressed	ON
DIST SW	● Ignition switch: ON	DISTANCE switch: Depressed	ON
		DISTANCE switch: Released	OFF
CRUISE LAMP	● Ignition switch: ON	MAIN switch: pressed at the 1st time → at the 2nd time	ON → OFF

MONITOR ITEM	CONDITION		SPECIFICATION
SET LAMP	● MAIN switch: ON ● When vehicle speed is between 40km/h (25MPH) and 144km/h (89MPH)	ASCD: Operating	ON
		ASCD: Not operating	OFF

*: Accelerator pedal position sensor 2 signal and throttle position sensor 2 signal are converted by ECM internally. Thus, they differ from ECM terminals voltage signal.

Major Sensor Reference Graph in Data Monitor Mode

ABS006L0

The following are the major sensor reference graphs in “DATA MONITOR” mode.

CLSD THL POS, ACCEL SEN 1, THRTL SEN 1

Below is the data for “CLSD THL POS”, “ACCEL SEN 1” and “THRTL SEN 1” when depressing the accelerator pedal with the ignition switch ON and with selector lever in D position.
The signal of “ACCEL SEN 1” and “THRTL SEN 1” should rise gradually without any intermittent drop or rise after “CLSD THL POS” is changed from ON to OFF.

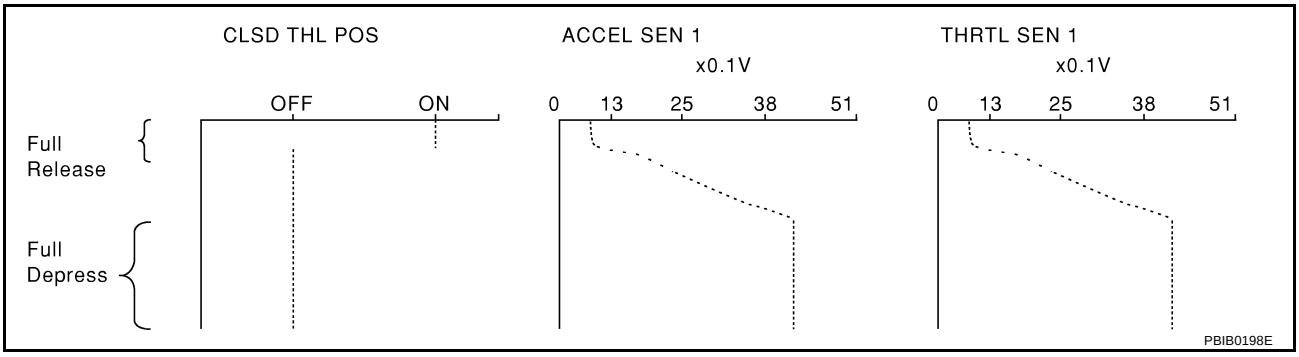

ENG SPEED, MAS A/F SE-B1, THRTL SEN 1, HO2S2 (B1), INJ PULSE-B1

Below is the data for “ENG SPEED”, “MAS A/F SE-B1”, “THRTL SEN 1”, “HO2S2 (B1)” and “INJ PULSE-B1” when revving engine quickly up to 4,800 rpm under no load after warming up engine sufficiently.
Each value is for reference, the exact value may vary.

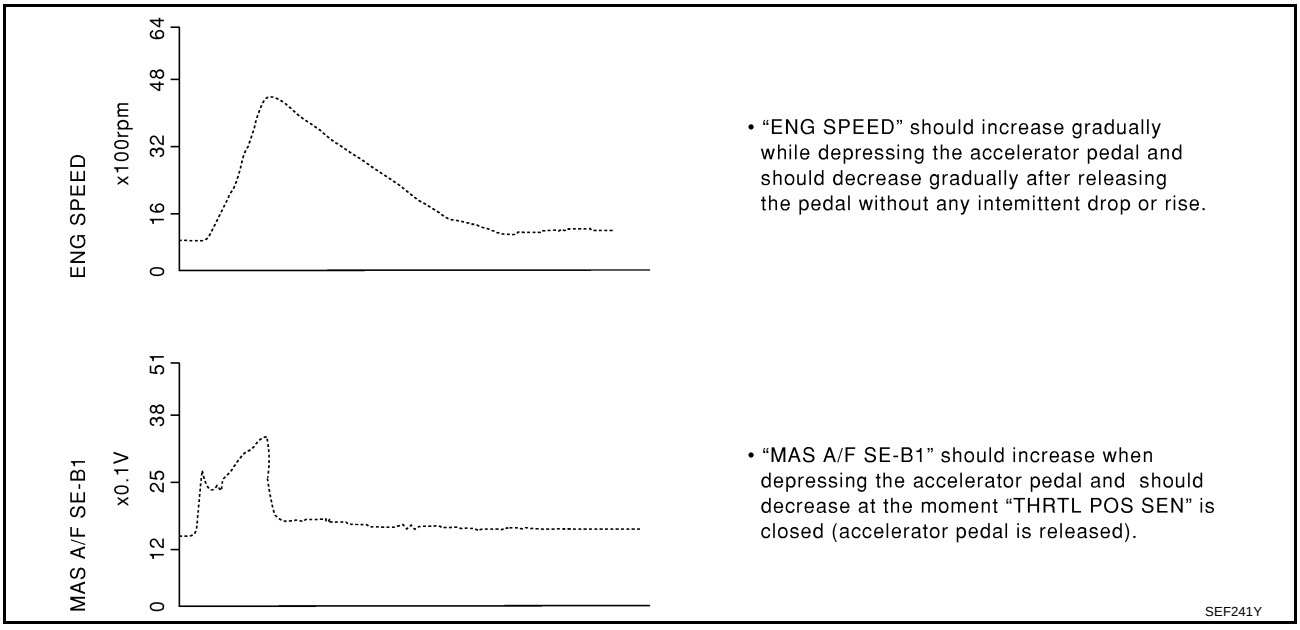

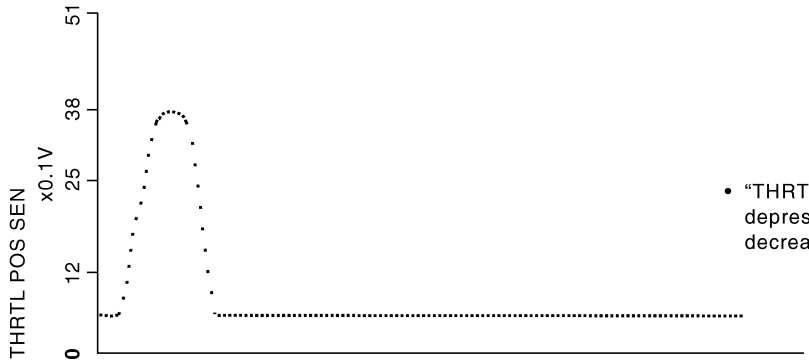

- “THRTL SEN1” should increase while depressing the accelerator pedal and should decrease while releasing it.

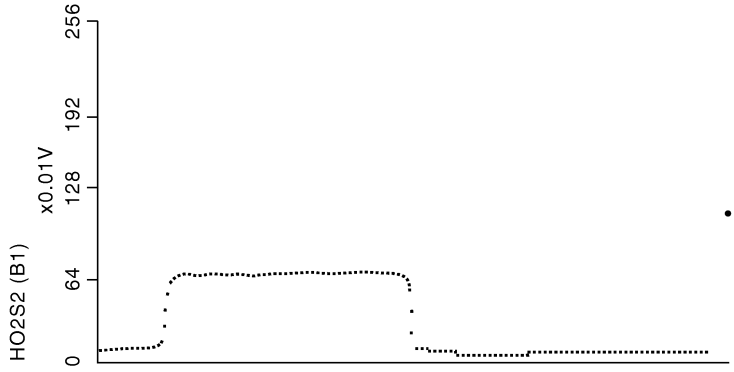

- “HO2S2 (B1)” may increase immediately after depressing the accelerator pedal and may decrease after releasing the pedal.

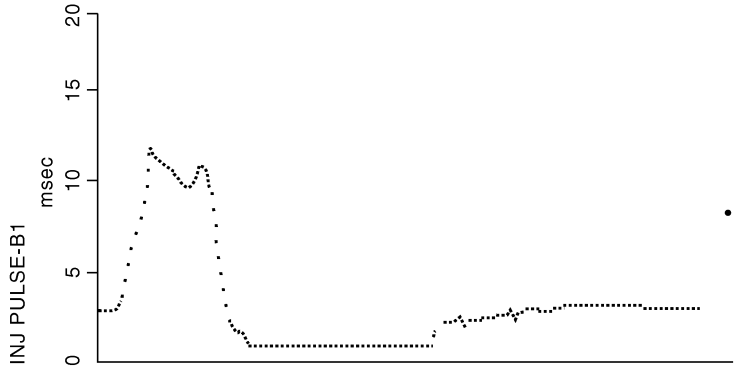

- “INJ PULSE-B1” should increase when depressing the accelerator pedal and should decrease when the pedal is released.

PBIB1594E

TROUBLE DIAGNOSIS - SPECIFICATION VALUE

PFP:00031

Description

ABS006L1

The specification (SP) value indicates the tolerance of the value that is displayed in “DATA MONITOR (SPEC)” mode of CONSULT-II during normal operation of the Engine Control System. When the value in “DATA MONITOR (SPEC)” mode is within the SP value, the Engine Control System is confirmed OK. When the value in “DATA MONITOR (SPEC)” mode is NOT within the SP value, the Engine Control System may have one or more malfunctions.
The SP value is used to detect malfunctions that may affect the Engine Control System, but will not light the MIL.
The SP value will be displayed for the following three items:

- B/FUEL SCHDL (The fuel injection pulse width programmed into ECM prior to any learned on board correction)
- A/F ALPHA-B1/B2 (The mean value of air-fuel ratio feedback correction factor per cycle)
- MAS A/F SE-B1 (The signal voltage of the mass air flow sensor)

Testing Condition

ABS006L2

- Vehicle driven distance: More than 5,000 km (3,017 miles)
- Barometric pressure: 98.3 - 104.3 kPa (1.003 - 1.064 kg/cm^2 , 14.25 - 15.12 psi)
- Atmospheric temperature: 20 - 30°C (68 - 86°F)
- Engine coolant temperature: 75 - 95°C (167 - 203°F)
- Transmission: Warmed-up*1
- Electrical load: Not applied*2
- Engine speed: Idle

*1: After the engine is warmed up to normal operating temperature, drive vehicle until “ATF TEMP 1” (A/T fluid temperature sensor signal) indicates more than 60°C (140°F).
*2: Rear window defogger switch, air conditioner switch, lighting switch are OFF. Steering wheel is straight ahead.

Inspection Procedure

ABS006L3

NOTE:
Perform “DATA MONITOR (SPEC)” mode in maximum scale display.

1. Perform EC-78, "Basic Inspection" .
2. Confirm that the testing conditions indicated above are met.
3. Select “B/FUEL SCHDL”, “A/F ALPHA-B1”, “A/F ALPHA-B2” and “MAS A/F SE-B1” in “DATA MONITOR (SPEC)” mode with CONSULT-II.
4. Make sure that monitor items are within the SP value.
5. If NG, go to EC-154, "Diagnostic Procedure" .

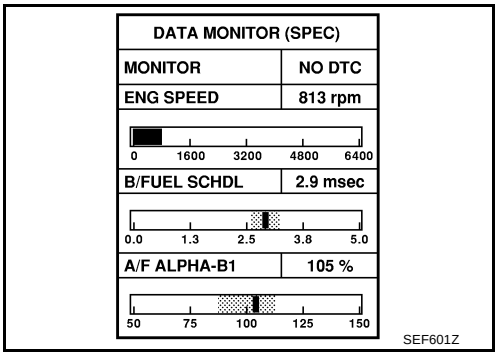

Diagnostic Procedure

ABS00E94

OVERALL SEQUENCE

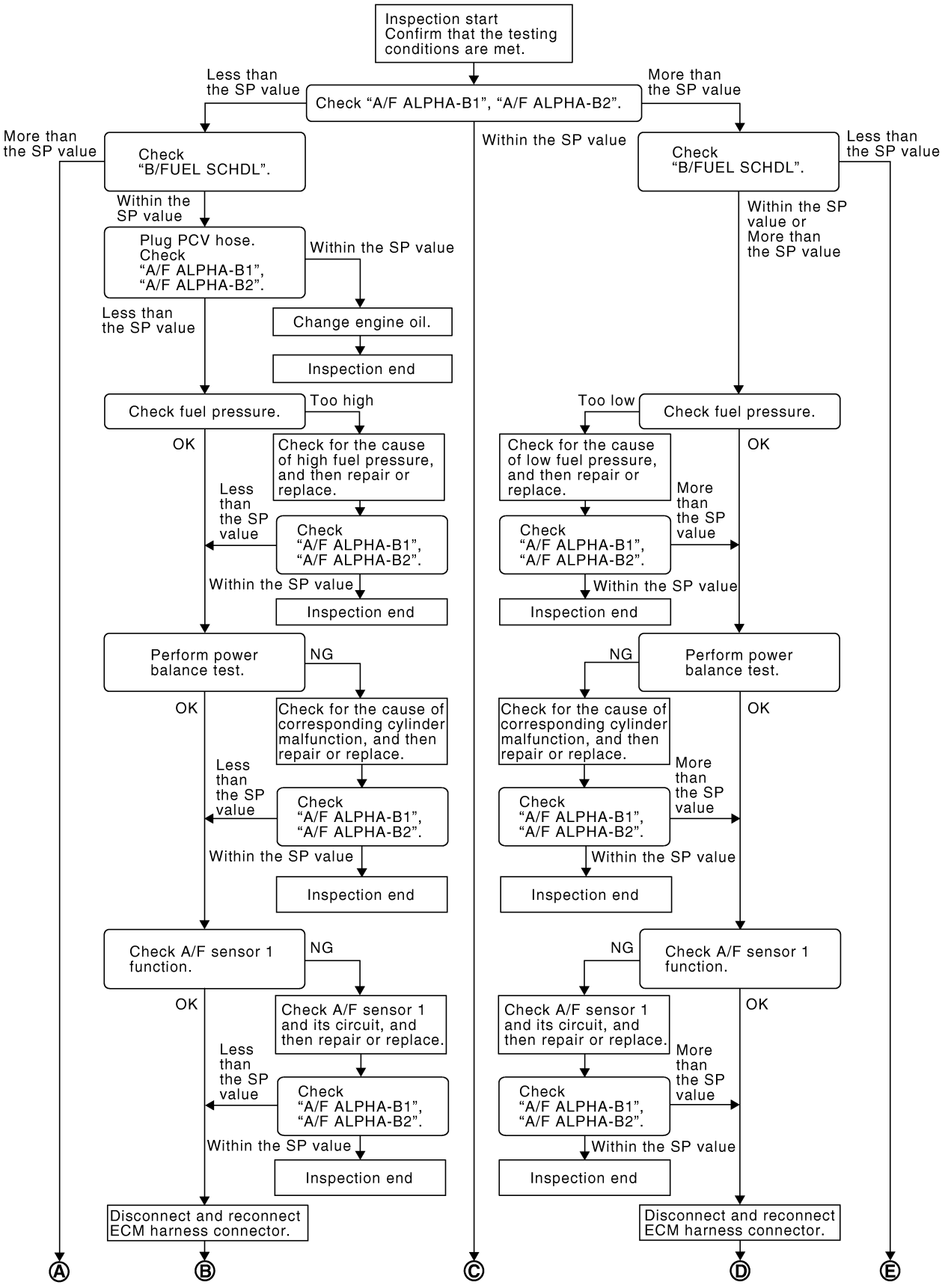

PBIB2268E

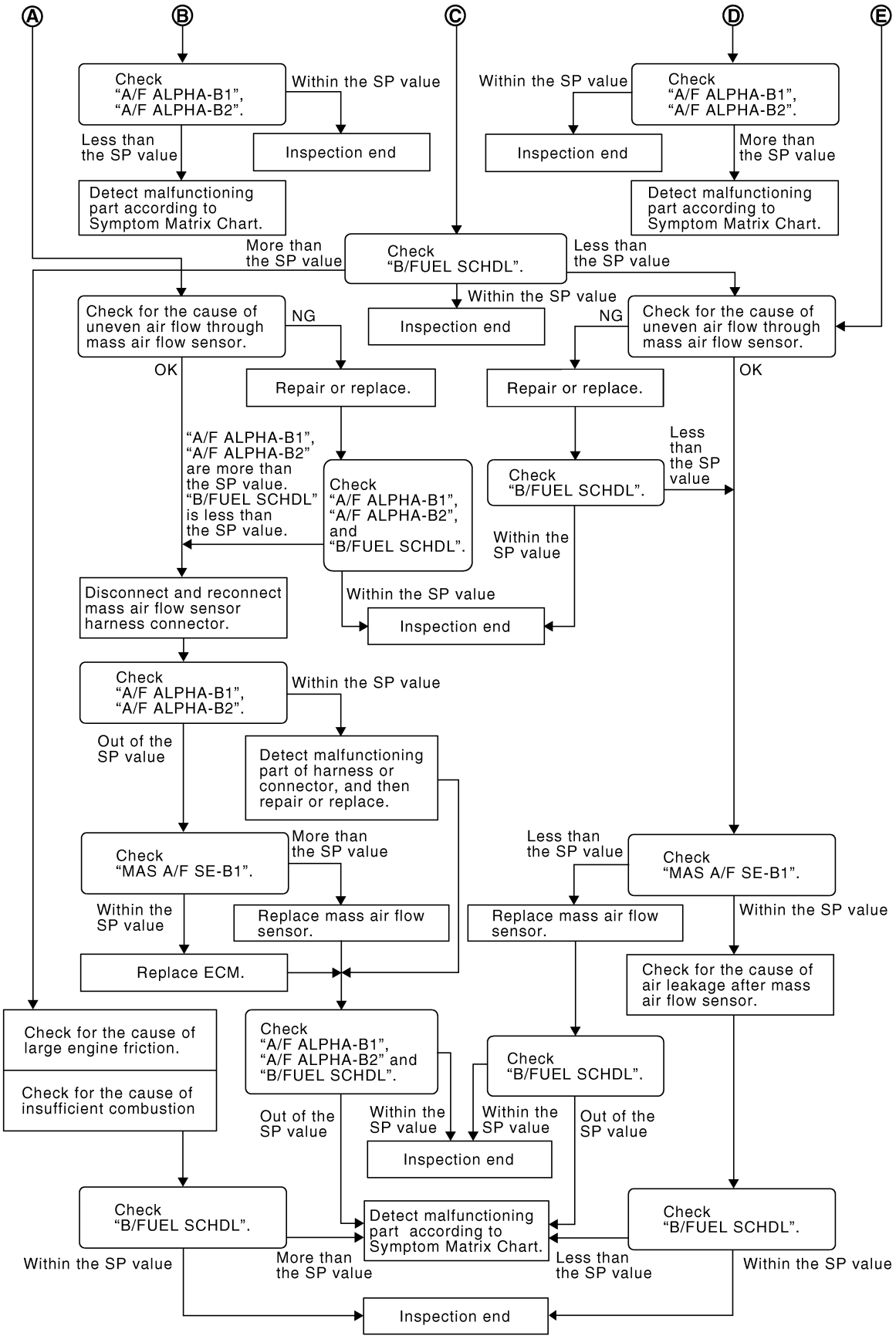
A
B
C
D
E
Check "A/F ALPHA-B1", "A/F ALPHA-B2".
Within the SP value
Inspection end
Less than the SP value
Detect malfunctioning part according to Symptom Matrix Chart.
Check "A/F ALPHA-B1", "A/F ALPHA-B2".
Within the SP value
Inspection end
More than the SP value
Detect malfunctioning part according to Symptom Matrix Chart.
More than the SP value
Check "B/FUEL SCHDL".
Less than the SP value
Within the SP value
Inspection end
Check for the cause of uneven air flow through mass air flow sensor.
NG
Repair or replace.
OK
Check for the cause of uneven air flow through mass air flow sensor.
NG
Repair or replace.
OK
"A/F ALPHA-B1", "A/F ALPHA-B2" are more than the SP value. "B/FUEL SCHDL" is less than the SP value.
Check "A/F ALPHA-B1", "A/F ALPHA-B2", and "B/FUEL SCHDL".
Check "B/FUEL SCHDL".
Less than the SP value
Within the SP value
Within the SP value
Inspection end
Disconnect and reconnect mass air flow sensor harness connector.
Check "A/F ALPHA-B1", "A/F ALPHA-B2".
Within the SP value
Out of the SP value
Detect malfunctioning part of harness or connector, and then repair or replace.
Check "MAS A/F SE-B1".
More than the SP value
Within the SP value
Replace mass air flow sensor.
Replace ECM.
Less than the SP value
Check "MAS A/F SE-B1".
Replace mass air flow sensor.
Within the SP value
Check for the cause of air leakage after mass air flow sensor.
Check for the cause of large engine friction.
Check for the cause of insufficient combustion
Check "A/F ALPHA-B1", "A/F ALPHA-B2" and "B/FUEL SCHDL".
Check "B/FUEL SCHDL".
Out of the SP value
Within the SP value
Within the SP value
Out of the SP value
Inspection end
Check "B/FUEL SCHDL".
Detect malfunctioning part according to Symptom Matrix Chart.
Check "B/FUEL SCHDL".
Within the SP value
More than the SP value
Less than the SP value
Within the SP value
Inspection end

PBIB2548E

DETAILED PROCEDURE

1. CHECK “A/F ALPHA-B1”, “A/F ALPHA-B2”

1. Start engine.
2. Confirm that the testing conditions are met. Refer to EC-153, "Testing Condition" .
3. Select “A/F ALPHA-B1”, “A/F ALPHA-B2” in “DATA MONITOR (SPEC)” mode, and make sure that the each indication is within the SP value.

   NOTE:
   Check “A/F ALPHA-B1”, “A/F ALPHA-B2” for approximately 1 minute because they may fluctuate. It is NG if the indication is out of the SP value even a little.

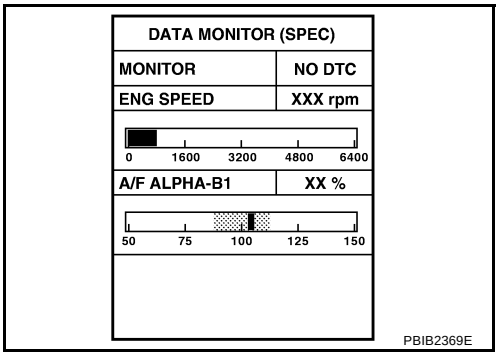

OK or NG

OK >> GO TO 17.
NG (Less than the SP value)>>GO TO 2.
NG (More than the SP value)>>GO TO 3.

2. CHECK “B/FUEL SCHDL”

Select “B/FUEL SCHDL” in “DATA MONITOR (SPEC)” mode, and make sure that the indication is within the SP value.

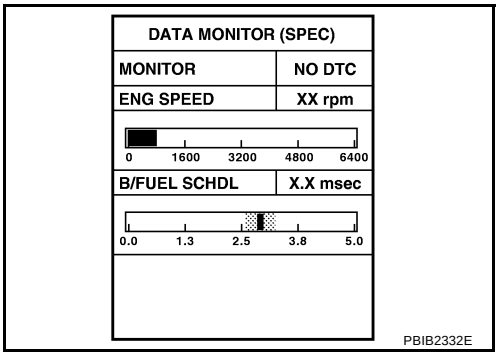

OK or NG

OK >> GO TO 4.
NG (More than the SP value)>>GO TO 19.

3. CHECK “B/FUEL SCHDL”

Select “B/FUEL SCHDL” in “DATA MONITOR (SPEC)” mode, and make sure that the indication is within the SP value.

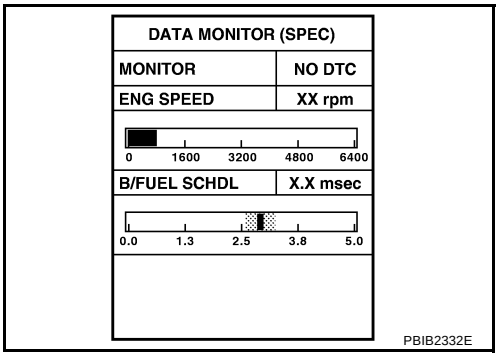

OK or NG

OK >> GO TO 6.
NG (More than the SP value)>>GO TO 6.
NG (Less than the SP value)>>GO TO 25.

4. CHECK “A/F ALPHA-B1”, “A/F ALPHA-B2”

1. Stop the engine.
2. Disconnect PCV hose, and then plug it.
3. Start engine.
4. Select “A/F ALPHA-B1”, “A/F ALPHA-B2” in “DATA MONITOR (SPEC)” mode, and make sure that the each indication is within the SP value.

OK or NG

OK >> GO TO 5.
NG >> GO TO 6.

5. CHANGE ENGINE OIL

1. Stop the engine.
2. Change engine oil.

NOTE:
This symptom may occur when a large amount of gasoline is mixed with engine oil because of driving conditions (such as when engine oil temperature does not rise enough since a journey distance is too short during winter). The symptom will not be detected after changing engine oil or changing driving condition.

>> **INSPECTION END**

6. CHECK FUEL PRESSURE

Check fuel pressure. (Refer to EC-99, "Fuel Pressure Check" .)

OK or NG

OK >> GO TO 9.
NG (Fuel pressure is too high)>>Replace fuel pressure regulator, refer to EC-99, "Fuel Pressure Check" . GO TO 8.
NG (Fuel pressure is too low)>>GO TO 7.

7. DETECT MALFUNCTIONING PART

1. Check the following.
- Clogged and bent fuel hose and fuel tube
- Clogged fuel filter
- Fuel pump and its circuit (Refer to EC-668, "FUEL PUMP CIRCUIT" .)
2. If NG, repair or replace the malfunctioning part. (Refer to EC-99, "Fuel Pressure Check" .)
If OK, replace fuel pressure regulator.

>> GO TO 8.

8. CHECK “A/F ALPHA-B1”, “A/F ALPHA-B2”

1. Start engine.
2. Select “A/F ALPHA-B1”, “A/F ALPHA-B2” in “DATA MONITOR (SPEC)” mode, and make sure that the each indication is within the SP value.

OK or NG

OK >> **INSPECTION END**
NG >> GO TO 9.

9. PERFORM POWER BALANCE TEST

1. Perform “POWER BALANCE” in “ACTIVE TEST” mode.
2. Make sure that the each cylinder produces a momentary engine speed drop.

OK or NG

OK >> GO TO 12.
NG >> GO TO 10.

ACTIVE TEST	
POWER BALANCE	
MONITOR	
ENG SPEED	XXX rpm
MAS A/F SE-B1	XXX V

PBIB0133E

10. DETECT MALFUNCTIONING PART

1. Check the following.
- Ignition coil and its circuit (Refer to EC-648, "IGNITION SIGNAL" .)
- Fuel injector and its circuit (Refer to EC-661, "INJECTOR CIRCUIT" .)
- Intake air leakage
- Low compression pressure (Refer to EM-100, "CHECKING COMPRESSION PRESSURE" .)
2. If NG, repair or replace the malfunctioning part.
   If OK, replace fuel injector. (It may be caused by leakage from fuel injector or clogging.)

>> GO TO 11.

11. CHECK “A/F ALPHA-B1”, “A/F ALPHA-B2”

1. Start engine.
2. Select “A/F ALPHA-B1”, “A/F ALPHA-B2” in “DATA MONITOR (SPEC)” mode, and make sure that the each indication is within the SP value.

OK or NG

OK >> **INSPECTION END**
NG >> GO TO 12.

12. CHECK A/F SENSOR 1 FUNCTION

Perform all DTC Confirmation Procedure related with A/F sensor 1.

- For DTC P1271, P1281, refer to EC-488, "DTC Confirmation Procedure" .
- For DTC P1272, P1282, refer to EC-497, "DTC Confirmation Procedure" .
- For DTC P1273, P1283, refer to EC-506, "DTC Confirmation Procedure" .
- For DTC P1274, P1284, refer to EC-516, "DTC Confirmation Procedure" .
- For DTC P1276, P1286, refer to EC-526, "DTC Confirmation Procedure" .
- For DTC P1278, P1288, refer to EC-537, "DTC Confirmation Procedure" .
- For DTC P1279, P1289, refer to EC-549, "DTC Confirmation Procedure" .

OK or NG

OK >> GO TO 15.
NG >> GO TO 13.

13. CHECK A/F SENSOR 1 CIRCUIT

Perform Diagnostic Procedure according to corresponding DTC.

>> GO TO 14.

14. CHECK “A/F ALPHA-B1”, “A/F ALPHA-B2”

1. Start engine.
2. Select “A/F ALPHA-B1”, “A/F ALPHA-B2” in “DATA MONITOR (SPEC)” mode, and make sure that the each indication is within the SP value.

OK or NG

OK >> **INSPECTION END**
NG >> GO TO 15.

15. DISCONNECT AND RECONNECT ECM HARNESS CONNECTOR

1. Stop the engine.
2. Disconnect ECM harness connector. Check pin terminal and connector for damage, and then reconnect it.

>> GO TO 16.

16. CHECK “A/F ALPHA-B1”, “A/F ALPHA-B2”

1. Start engine.
2. Select “A/F ALPHA-B1”, “A/F ALPHA-B2” in “DATA MONITOR (SPEC)” mode, and make sure that the each indication is within the SP value.

OK or NG

OK >> **INSPECTION END**
NG >> Detect malfunctioning part according to EC-110, "Symptom Matrix Chart" .

17. CHECK “B/FUEL SCHDL”

Select “B/FUEL SCHDL” in “DATA MONITOR (SPEC)” mode, and make sure that the indication is within the SP value.

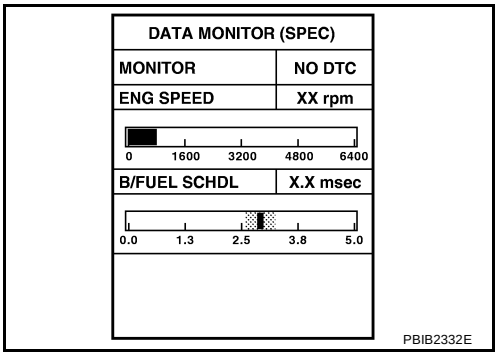

OK or NG

OK >> **INSPECTION END**
NG (More than the SP value)>>GO TO 18.
NG (Less than the SP value)>>GO TO 25.

18. DETECT MALFUNCTIONING PART

1. Check for the cause of large engine friction. Refer to the following.
- Engine oil level is too high
- Engine oil viscosity
- Belt tension of power steering, alternator, A/C compressor, etc. is excessive
- Noise from engine
- Noise from transmission, etc.
2. Check for the cause of insufficient combustion. Refer to the following.
- Valve clearance malfunction
- Intake valve timing control function malfunction
- Camshaft sprocket installation malfunction, etc.

>> Repair or replace malfunctioning part, and then GO TO 30.

19. CHECK INTAKE SYSTEM

Check for the cause of uneven air flow through mass air flow sensor. Refer to the following.

- Crushed air ducts
- Malfunctioning seal of air cleaner element
- Uneven dirt of air cleaner element
- Improper specification of intake air system

OK or NG

OK >> GO TO 21.
NG >> Repair or replace malfunctioning part, and then GO TO 20.

20. CHECK “A/F ALPHA-B1”, “A/F ALPHA-B2”, AND “B/FUEL SCHDL”

Select “A/F ALPHA-B1”, “A/F ALPHA-B2”, and “B/FUEL SCHDL” in “DATA MONITOR (SPEC)” mode, and make sure that the each indication is within the SP value.

OK or NG

OK >> **INSPECTION END**
NG (“B/FUEL SCHDL” is more, “A/F ALPHA-B1”, “A/F ALPHA-B2” are less than the SP value)>>GO TO 21.

21. DISCONNECT AND RECONNECT MASS AIR FLOW SENSOR HARNESS CONNECTOR

1. Stop the engine.
2. Disconnect mass air flow sensor harness connector. Check pin terminal and connector for damage and then reconnect it again.

>> GO TO 22.

22. CHECK “A/F ALPHA-B1”, “A/F ALPHA-B2”

1. Start engine.
2. Select “A/F ALPHA-B1”, “A/F ALPHA-B2” in “DATA MONITOR (SPEC)” mode, and make sure that the each indication is within the SP value.

OK or NG

OK >> 1. Detect malfunctioning part of mass air flow sensor circuit and repair it. Refer to EC-195, "DTC P0102, P0103 MAF SENSOR" .
2. GO TO 29.

NG >> GO TO 23.

23. CHECK “MAS A/F SE-B1”

Select “MAS A/F SE-B1” in “DATA MONITOR (SPEC)” mode, and make sure that the indication is within the SP value.

OK or NG

OK >> GO TO 24.
NG (More than the SP value)>>Replace mass air flow sensor, and then GO TO 29.

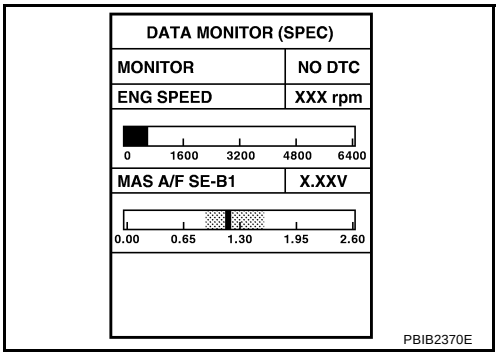

24. REPLACE ECM

1. Replace ECM.
2. Perform initialization of IVIS(NATS) system and registration of all IVIS(NATS) ignition key IDs. Refer to BL-215, "ECM Re-Communicating Function" .
3. Perform EC-96, "VIN Registration" .
4. Perform EC-96, "Accelerator Pedal Released Position Learning" .
5. Perform EC-96, "Throttle Valve Closed Position Learning" .
6. Perform EC-97, "Idle Air Volume Learning" .

>> GO TO 29.

25. CHECK INTAKE SYSTEM

Check for the cause of uneven air flow through mass air flow sensor. Refer to the following.

- Crushed air ducts
- Malfunctioning seal of air cleaner element
- Uneven dirt of air cleaner element
- Improper specification of intake air system

OK or NG

OK >> GO TO 27.
NG >> Repair or replace malfunctioning part, and then GO TO 26.

26. CHECK "B/FUEL SCHDL"

Select "B/FUEL SCHDL" in "DATA MONITOR (SPEC)" mode, and make sure that the indication is within the SP value.

OK or NG

OK >> **INSPECTION END**
NG (Less than the SP value)>>GO TO 27.

27. CHECK "MAS A/F SE-B1"

Select "MAS A/F SE-B1" in "DATA MONITOR (SPEC)" mode, and make sure that the indication is within the SP value.

OK or NG

OK >> GO TO 28.
NG (Less than the SP value)>>Replace mass air flow sensor, and then GO TO 30.

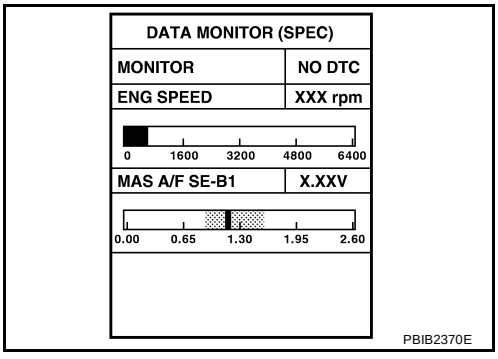

28. CHECK INTAKE SYSTEM

Check for the cause of air leak after the mass air flow sensor. Refer to the following.

- Disconnection, looseness, and cracks in air duct
- Looseness of oil filler cap
- Disconnection of oil level gauge
- Open stuck, breakage, hose disconnection, or cracks of PCV valve
- Disconnection or cracks of EVAP purge hose, open stuck of EVAP canister purge volume control solenoid valve
- Malfunctioning seal of rocker cover gasket
- Disconnection, looseness, or cracks of hoses, such as vacuum hose, connecting to intake air system parts
- Malfunctioning seal of intake air system, etc.

>> GO TO 30.

29. CHECK "A/F ALPHA-B1", "A/F ALPHA-B2", AND "B/FUEL SCHDL"

Select "A/F ALPHA-B1", "A/F ALPHA-B2", and "B/FUEL SCHDL" in "DATA MONITOR (SPEC)" mode, and make sure that the each indication is within the SP value.

OK or NG

OK >> **INSPECTION END**
NG >> Detect malfunctioning part according to EC-110, "Symptom Matrix Chart" .

30. CHECK “B/FUEL SCHDL”

Select “B/FUEL SCHDL” in “DATA MONITOR (SPEC)” mode, and then make sure that the indication is within the SP value.

OK or NG

OK >> **INSPECTION END**
NG >> Detect malfunctioning part according to EC-110, "Symptom Matrix Chart" .

TROUBLE DIAGNOSIS FOR INTERMITTENT INCIDENT

PFP:00006

Description

ABS006L5

Intermittent incidents may occur. In many cases, the malfunction resolves itself (the part or circuit function returns to normal without intervention). It is important to realize that the symptoms described in the customer's complaint often do not recur on (1st trip) DTC visits. Realize also that the most frequent cause of Intermittent incidents occurrences is poor electrical connections. Because of this, the conditions under which the incident occurred may not be clear. Therefore, circuit checks made as part of the standard diagnostic procedure may not indicate the specific malfunctioning area.

Common Intermittent Incidents Report Situations

STEP in Work Flow	Situation
2	The CONSULT-II is used. The SELF-DIAG RESULTS screen shows time data other than [0] or [1t].
3 or 4	The symptom described by the customer does not recur.
5	(1st trip) DTC does not appear during the DTC Confirmation Procedure.
10	The Diagnostic Procedure for PXXXX does not indicate the malfunctioning area.

Diagnostic Procedure

ABS006L6

1. INSPECTION START

Erase (1st trip) DTCs. Refer to EC-68, "HOW TO ERASE EMISSION-RELATED DIAGNOSTIC INFORMATION" .

>> GO TO 2.

2. CHECK GROUND TERMINALS

Check ground terminals for corroding or loose connection.
Refer to GI-27, "How to Perform Efficient Diagnosis for an Electrical Incident" , “CIRCUIT INSPECTION”, “Ground Inspection”.

OK or NG

OK >> GO TO 3.
NG >> Repair or replace.

3. SEARCH FOR ELECTRICAL INCIDENT

Perform GI-27, "How to Perform Efficient Diagnosis for an Electrical Incident" , “INCIDENT SIMULATION TESTS”.

OK or NG

OK >> GO TO 4.
NG >> Repair or replace.

4. CHECK CONNECTOR TERMINALS

Refer to GI-24, "How to Check Terminal" , “HOW TO PROBE CONNECTORS”, “How to Check Enlarged Contact Spring of Terminal”.

OK or NG

OK >> **INSPECTION END**
NG >> Repair or replace connector.

POWER SUPPLY AND GROUND CIRCUIT

PFP:24110

Wiring Diagram

ABS006L7

EC-MAIN-01

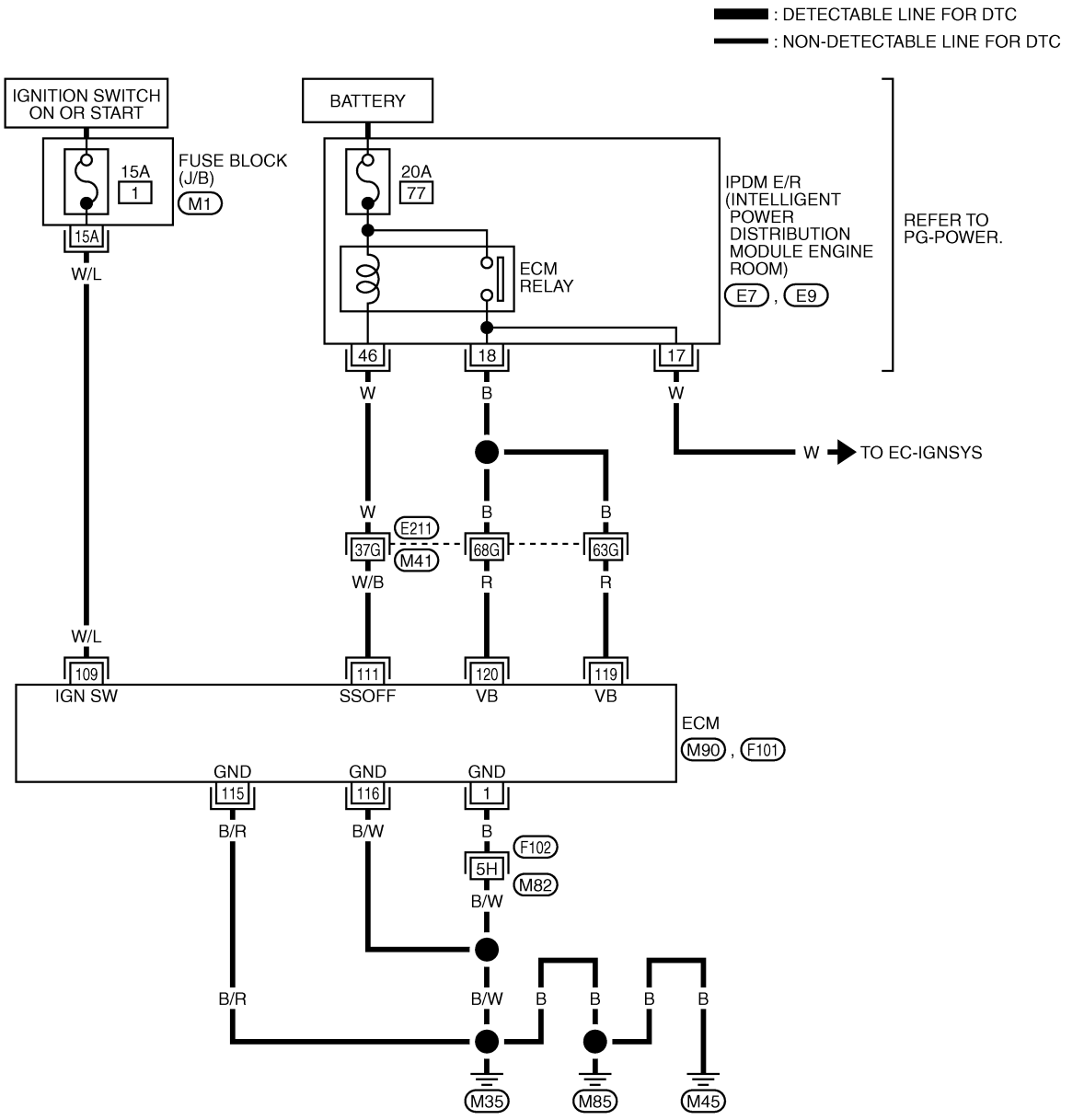

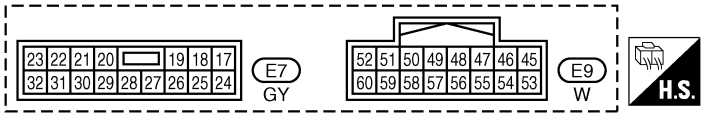

REFER TO THE FOLLOWING.
E211 , F102 -SUPER MULTIPLE JUNCTION (SMJ)
M1 -FUSE BLOCK-JUNCTION BOX (J/B)

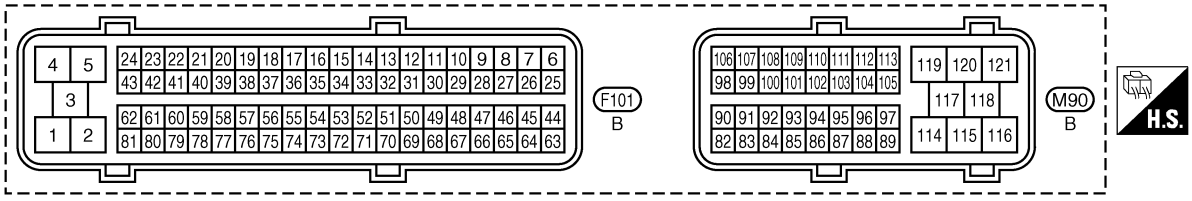

TBWM0217E

Specification data are reference values and are measured between each terminal and ground.

CAUTION:
Do not use ECM ground terminals when measuring input/output voltage. Doing so may result in damage to the ECM's transistor. Use a ground other than ECM terminals, such as the ground.

TERMINAL NO.	WIRE COLOR	ITEM	CONDITION	DATA (DC Voltage)
1	B	ECM ground	**[Engine is running]** ● Idle speed	Body ground
109	W/L	Ignition switch	**[Ignition switch: OFF]**	0V
			[Ignition switch: ON]	BATTERY VOLTAGE (11 - 14V)
111	W/B	ECM relay (Self shut-off)	**[Engine is running]** **[Ignition switch: OFF]** ● For a few seconds after turning ignition switch OFF	0 - 1.5V
			[Ignition switch: OFF] ● More than a few seconds after turning ignition switch OFF	BATTERY VOLTAGE (11 - 14V)
115 116	B/R B/W	ECM ground	**[Engine is running]** ● Idle speed	Body ground
119 120	R R	Power supply for ECM	**[Ignition switch: ON]**	BATTERY VOLTAGE (11 - 14V)

Diagnostic Procedure

ABS006L8

1. INSPECTION START

Start engine.
Is engine running?

Yes or No

Yes >> GO TO 8.
No >> GO TO 2.

2. CHECK ECM POWER SUPPLY CIRCUIT-I

1. Turn ignition switch OFF and then ON.
2. Check voltage between ECM terminal 109 and ground with CONSULT-II or tester.

Voltage: Battery voltage

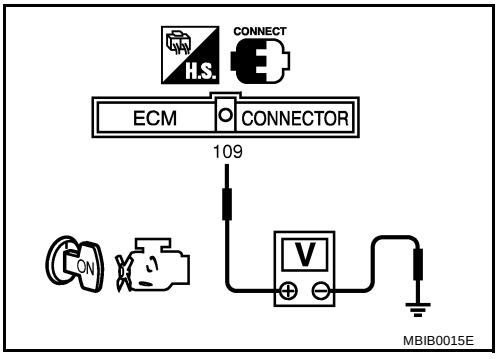

OK or NG

OK >> GO TO 4.
NG >> GO TO 3.

3. DETECT MALFUNCTIONING PART

Check the following.

- Fuse block (J/B) connector M1
- 15A fuse
- Harness for open or short between ECM and fuse

>> Repair open circuit or short ground or short power in harness or connectors.

4. CHECK GROUND CONNECTIONS

1. Turn ignition switch OFF.
2. Loosen and retighten ground three screws on the body. Refer to EC-170, "Ground Inspection" .

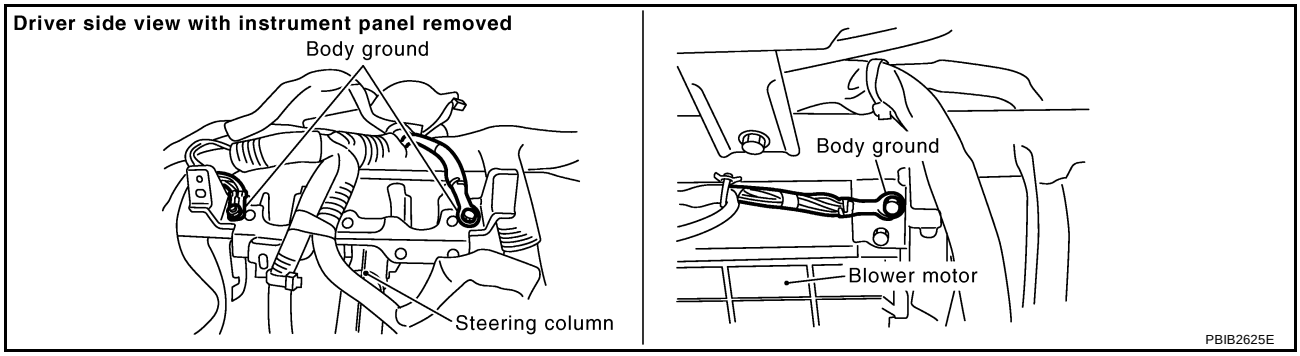

OK or NG

OK >> GO TO 5.
NG >> Repair or replace ground connections.

5. CHECK ECM GROUND CIRCUIT FOR OPEN AND SHORT-I

1. Disconnect ECM harness connector.
2. Check harness continuity between ECM terminals 1, 115, 116 and ground.
   Refer to Wiring Diagram.

   Continuity should exist.

3. Also check harness for short to power.

OK or NG

OK >> GO TO 7.
NG >> GO TO 6.

6. DETECT MALFUNCTIONING PART

Check the following.

- Harness connectors F102, M82
- Harness for open or short between ECM and ground

>> Repair open circuit or short to power in harness or connectors.

7. CHECK ECM POWER SUPPLY CIRCUIT-II

1. Reconnect ECM harness connector.
2. Turn ignition switch ON.
3. Check voltage between IPDM E/R connector E7 terminal 17 and ground with CONSULT-II or tester.

   Voltage: Battery voltage

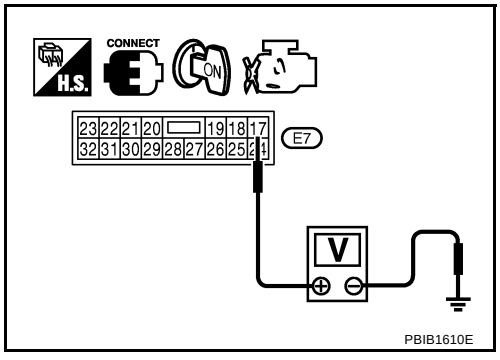

OK or NG

OK >> Go to EC-648, "IGNITION SIGNAL" .
NG >> GO TO 8.

8. CHECK ECM POWER SUPPLY CIRCUIT-III

1. Stop engine and wait at least 10 seconds.
2. Turn ignition switch ON and then OFF.
3. Check voltage between ECM terminals 119, 120 and ground with CONSULT-II or tester.

Voltage: After turning ignition switch OFF, battery voltage will exist for a few seconds, then drop approximately 0V.

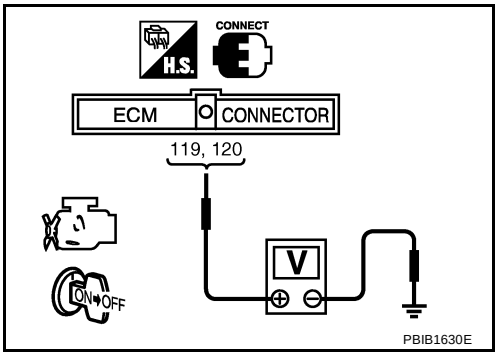

OK or NG

OK >> GO TO 18.
NG (Battery voltage does not exist.)>>GO TO 9.
NG (Battery voltage exists for more than a few seconds.)>>GO TO 12.

9. CHECK ECM POWER SUPPLY CIRCUIT-IV

1. Turn ignition switch OFF, and wait at least 10 seconds.
2. Check voltage between ECM terminal 111 and ground with CONSULT-II or tester.

Voltage: Battery voltage

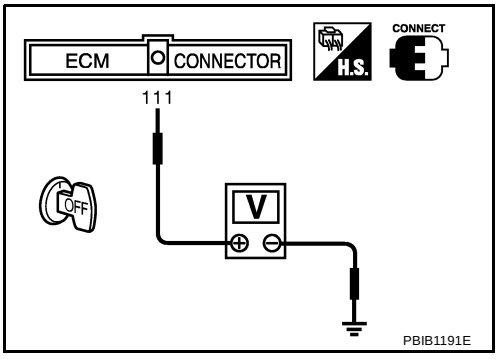

OK or NG

OK >> GO TO 10.
NG >> GO TO 12.

10. CHECK ECM POWER SUPPLY CIRCUIT-V

1. Disconnect ECM harness connector.
2. Disconnect IPDM E/R harness connector E7.
3. Check harness continuity between ECM terminals 119, 120 and IPDM E/R terminal 18. Refer to Wiring Diagram.

Continuity should exist.

4. Also check harness for short to ground and short to power.

OK or NG

OK >> GO TO 15.
NG >> GO TO 11.

11. DETECT MALFUNCTIONING PART

Check the following.

- Harness or connectors E211, M41
- Harness for open or short between ECM and IPDM E/R

>> Repair open circuit or short to ground or short to power in harness or connectors.

12. CHECK ECM POWER SUPPLY CIRCUIT-VI

1. Disconnect ECM harness connector.
2. Disconnect IPDM E/R harness connector E9.
3. Check harness continuity between ECM terminal 111 and IPDM E/R terminal 46.
   Refer to Wiring Diagram.

   Continuity should exist.

4. Also check harness for short to ground and short to power.

OK or NG

OK >> GO TO 14.
NG >> GO TO 13.

13. DETECT MALFUNCTIONING PART

Check the following.

- Harness or connectors E211, M41
- Harness for open or short between ECM and IPDM E/R

>> Repair open circuit or short to ground or short to power in harness or connectors.

14. CHECK 20A FUSE

1. Disconnect 20 A fuse from IPDM E/R.
2. Check 20A fuse.

OK or NG

OK >> GO TO 18.
NG >> Replace 20A fuse.

15. CHECK GROUND CONNECTIONS

Loosen and retighten ground three screws on the body. Refer to EC-170, "Ground Inspection" .

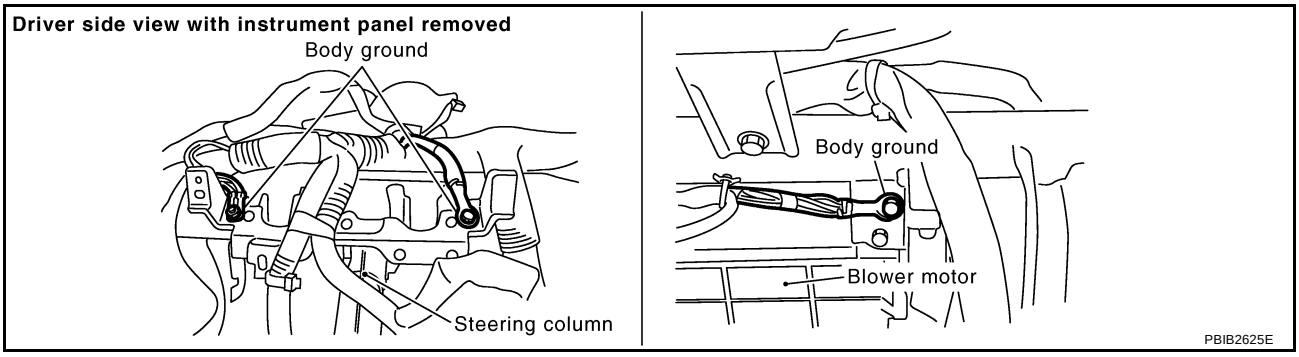

OK or NG

OK >> GO TO 16.
NG >> Repair or replace ground connections.

16. CHECK ECM GROUND CIRCUIT FOR OPEN AND SHORT-II

1. Check harness continuity between ECM terminals 1, 115, 116 and ground.
   Refer to Wiring Diagram.

   Continuity should exist.

2. Also check harness for short to power.

OK or NG

OK >> GO TO 17.
NG >> Repair open circuit or short to power in harness or connectors.

17. DETECTION MALFUNCTIONING PART

Check the following.

- Harness connectors F102, M82
- Harness for open or short between ECM and ground

>> Repair open circuit or shoat to power in harness connectors.

18. CHECK INTERMITTENT INCIDENT

Refer to EC-163, "TROUBLE DIAGNOSIS FOR INTERMITTENT INCIDENT" .

OK or NG

OK >> Replace IPDM E/R.
NG >> Repair open circuit or short to power in harness or connectors.

Ground Inspection

ABS00AN1

Ground connections are very important to the proper operation of electrical and electronic circuits. Ground connections are often exposed to moisture, dirt and other corrosive elements. The corrosion (rust) can become an unwanted resistance. This unwanted resistance can change the way a circuit works.
Electronically controlled circuits are very sensitive to proper grounding. A loose or corroded ground can drastically affect an electronically controlled circuit. A poor or corroded ground can easily affect the circuit. Even when the ground connection looks clean, there can be a thin film of rust on the surface.
When inspecting a ground connection follow these rules:

- Remove the ground bolt or screw.
- Inspect all mating surfaces for tarnish, dirt, rust, etc.
- Clean as required to assure good contact.
- Reinstall bolt or screw securely.
- Inspect for “add-on” accessories which may be interfering with the ground circuit.
- If several wires are crimped into one ground eyelet terminal, check for proper crimps. Make sure all of the wires are clean, securely fastened and providing a good ground path. If multiple wires are cased in one eyelet make sure no ground wires have excess wire insulation.

For detailed ground distribution information, refer to PG-31, "Ground Distribution" .

Ground Inspection

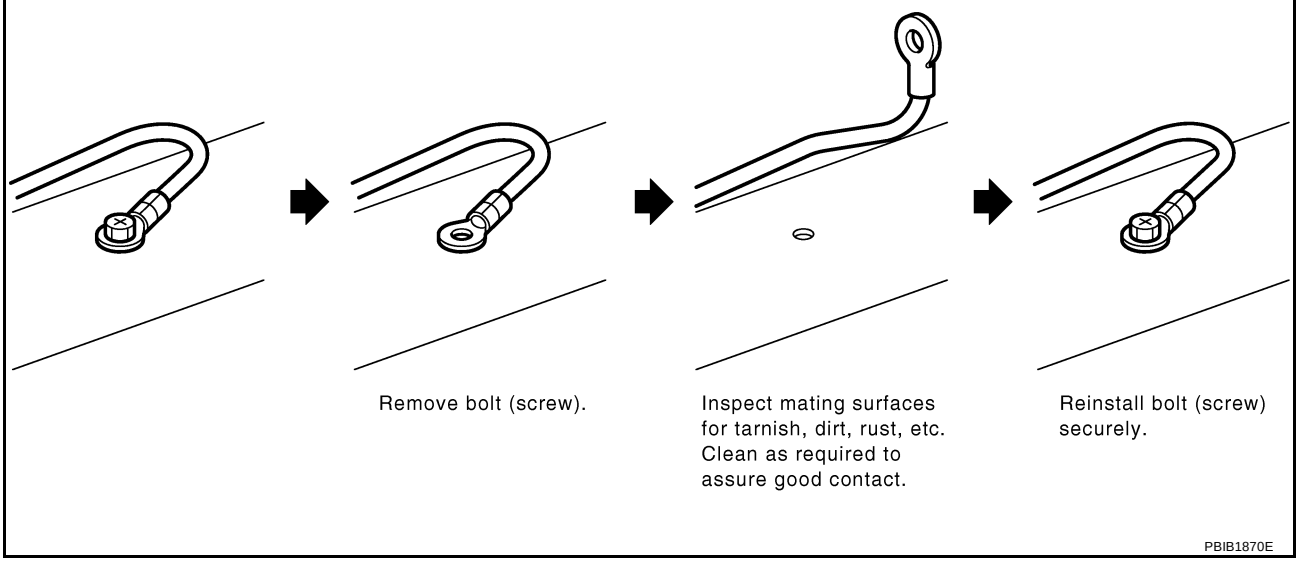

DTC U1000, U1001 CAN COMMUNICATION LINE

PFP:23710

Description

ABS006L9

CAN (Controller Area Network) is a serial communication line for real time application. It is an on-vehicle multiplex communication line with high data communication speed and excellent error detection ability. Many electronic control units are equipped onto a vehicle, and each control unit shares information and links with other control units during operation (not independent). In CAN communication, control units are connected with 2 communication lines (CAN H line, CAN L line) allowing a high rate of information transmission with less wiring. Each control unit transmits/receives data but selectively reads required data only.

On Board Diagnosis Logic

ABS006LA

DTC No.	Trouble diagnosis name	DTC detecting condition	Possible cause
U1000*1 1000*1	CAN communication line	● ECM cannot communicate to other control units. ● ECM cannot communicate for more than the specified time.	● Harness or connectors (CAN communication line is open or shorted)
U1001*2 1001*2			

*1: **This self-diagnosis has the one trip detection logic.**
*2: **The MIL will not light up for this diagnosis.**

DTC Confirmation Procedure

ABS006LB

1. Turn ignition switch ON and wait at least 3 seconds.
2. Select “DATA MONITOR” mode with CONSULT-II.
3. If 1st trip DTC is detected, go to EC-173, "Diagnostic Procedure" .

Wiring Diagram

ABS006LC

EC-CAN-01

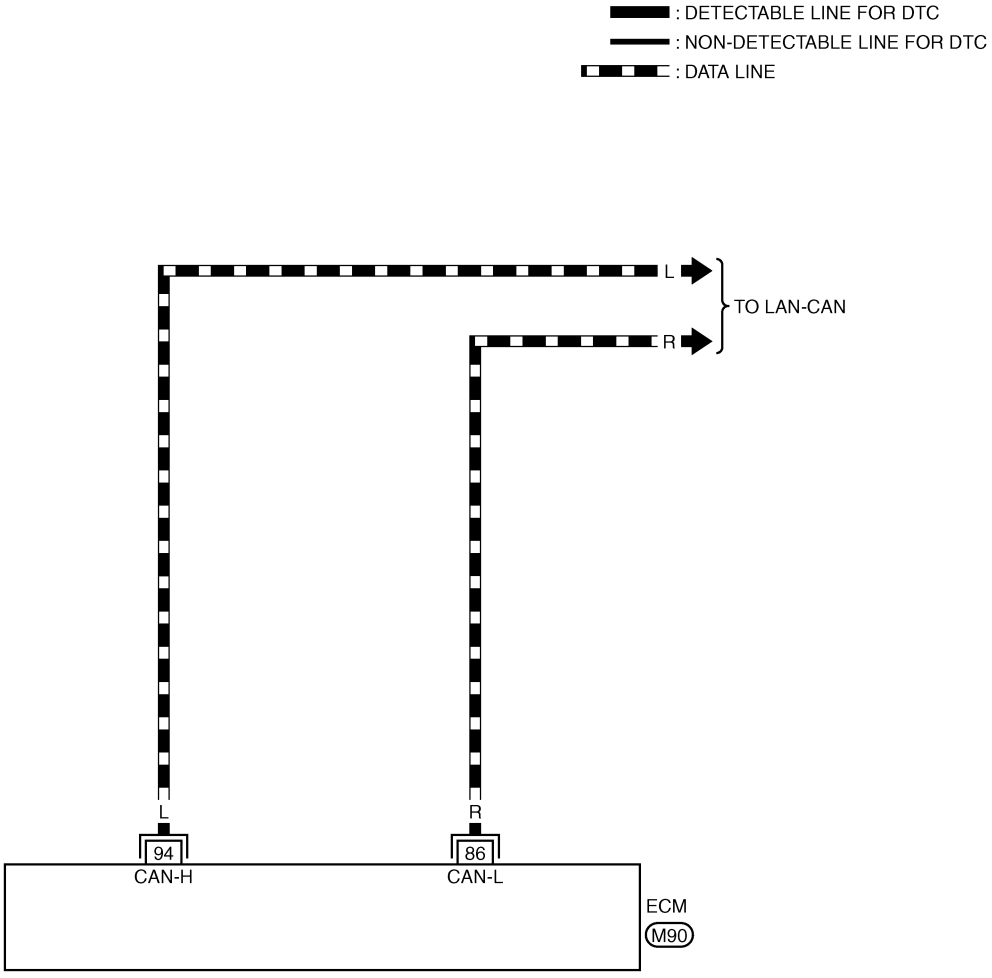

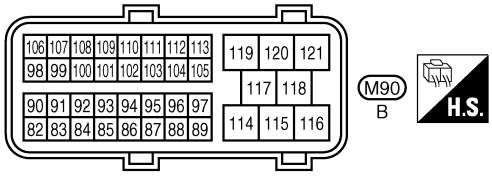

TBWM0218E

Diagnostic Procedure

ABS006LD

Go to LAN-5, "PRECAUTIONS" .

DTC P0011, P0021 IVT CONTROL

PFP:23796

Description

ABS006LE

SYSTEM DESCRIPTION

Sensor	Input signal to ECM	ECM function	Actuator
Crankshaft position sensor (POS)	Engine speed and piston position	Intake valve timing control	Intake valve timing control solenoid valve
Camshaft position sensor (PHASE)			
Engine coolant temperature sensor	Engine coolant temperature		
Wheel sensor*	Vehicle speed		

*: This signal is sent to the ECM through CAN communication line

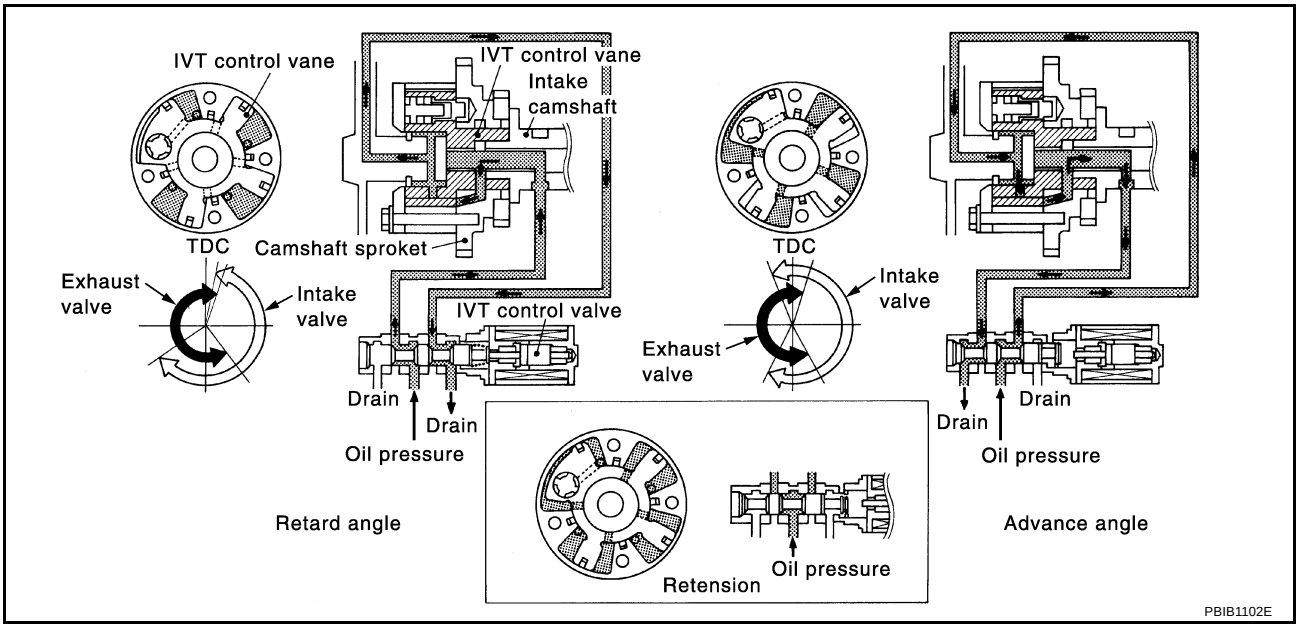

This mechanism hydraulically controls cam phases continuously with the fixed operating angle of the intake valve.

The ECM receives signals such as crankshaft position, camshaft position, engine speed, and engine coolant temperature. Then, the ECM sends ON/OFF pulse duty signals to the intake valve timing control solenoid valve depending on driving status. This makes it possible to control the shut/open timing of the intake valve to increase engine torque in low/mid speed range and output in high-speed range.

CONSULT-II Reference Value in Data Monitor Mode

ABS006LF

Specification data are reference values.

MONITOR ITEM	CONDITION		SPECIFICATION
INT/V TIM (B1) INT/V TIM (B2)	● Engine: After warming up ● Selector lever: P or N ● Air conditioner switch: OFF ● No-load	Idle	–5° - 5°CA
		When revving engine up to 2,000 rpm quickly	Approx. 0° - 30°CA
INT/V SOL (B1) INT/V SOL (B2)	● Engine: After warming up ● Selector lever: P or N ● Air conditioner switch: OFF ● No-load	Idle	0% - 2%
		When revving engine up to 2,000 rpm quickly	Approx. 0% - 50%

On Board Diagnosis Logic

ABS006LG

DTC No.	Trouble diagnosis name	Detecting condition	Possible cause
P0011 0011 (Bank 1)	Intake valve timing control performance	There is a gap between angle of target and phase-control angle degree.	● Crankshaft position sensor (POS) ● Camshaft position sensor (PHASE) ● Intake valve control solenoid valve ● Accumulation of debris to the signal pick-up portion of the camshaft ● Timing chain installation ● Foreign matter caught in the oil groove for intake valve timing control
P0021 0021 (Bank 2)			

FAIL-SAFE MODE

When the malfunction is detected, the ECM enters fail-safe mode.

Detected items	Engine operating condition in fail-safe mode
Intake valve timing control	The signal is not energized to the solenoid valve and the valve control does not function.

DTC Confirmation Procedure

ABS006LH

CAUTION:
Always drive at a safe speed.

NOTE:

- **If DTC P0011 or P0021 is displayed with DTC P1111 or P1136, first perform trouble diagnosis for DTC P1111 or P1136. Refer to EC-417 .**
- If DTC Confirmation Procedure has been previously conducted, always turn ignition switch OFF and wait at least 10 seconds before conducting the next test.

TESTING CONDITION:
Before performing the following procedure, confirm that battery voltage is between 10V and 16V at idle.

WITH CONSULT-II

1. Turn ignition switch ON and select “DATA MONITOR” mode with CONSULT-II.
2. Start engine and warm it up to the normal operating temperature.
3. Maintain the following conditions for at least 6 consecutive seconds. Hold the accelerator pedal as steady as possible.

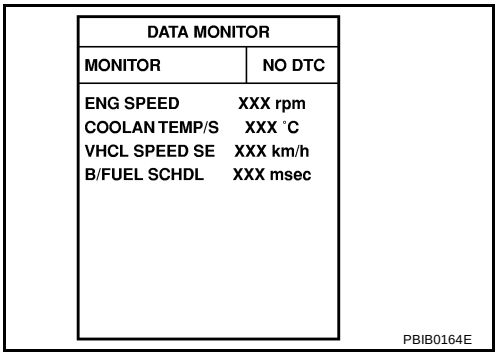

VHCL SPEED SE	100 - 120 km/h (63 - 75 MPH)
ENG SPEED	2,000 - 4,000 rpm
COOLAN TEMP/S	60 - 120°C (140 - 248°F)
B/FUEL SCHDL	More than 7.3 msec
Selector lever	D position

4. Stop vehicle with engine running and let engine idle for 10 seconds.
5. If the 1st trip DTC is detected, go to EC-176, "Diagnostic Procedure" .
   If the 1st trip DTC is not detected, go to next step.
6. Maintain the following conditions for at least 20 consecutive seconds.

ENG SPEED	1,700 - 3,175 rpm (A constant rotation is maintained.)
COOLAN TEMP/S	70 - 105°C (158 - 221°F)
Selector lever	1st or 2nd position
Driving location uphill	Driving vehicle uphill (Increased engine load will help maintain the driving conditions required for this test.)

7. If the 1st trip DTC is detected, go to EC-176, "Diagnostic Procedure" .

WITH GST

Follow the procedure “WITH CONSULT-II” above.

Diagnostic Procedure

ABS00E96

1. CHECK OIL PRESSURE WARNING LAMP

1. Start engine.
2. Check oil pressure warning lamp and confirm it is not illuminated.

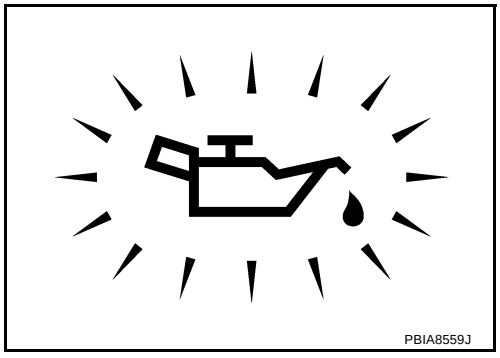

OK or NG

OK >> GO TO 2.
KG >> Go to LU-8, "OIL PRESSURE CHECK" .

2. CHECK INTAKE VALVE TIMING CONTROL SOLENOID VALVE

Refer to EC-177, "Component Inspection" .

OK or NG

OK >> GO TO 3.
NG >> Replace intake valve timing control solenoid valve.

3. CHECK CRANKSHAFT POSITION SENSOR (POS)

Refer to EC-306, "Component Inspection" .

OK or NG

OK >> GO TO 4.
NG >> Replace crankshaft position sensor (POS).

4. CHECK CAMSHAFT POSITION SENSOR (PHASE)

Refer to EC-315, "Component Inspection" .

OK or NG

OK >> GO TO 5.
NG >> Replace camshaft position sensor (PHASE).

5. CHECK CAMSHAFT (INT)

Check the following.

- Accumulation of debris to the signal plate of camshaft rear end
- Chipping signal plate of camshaft rear end

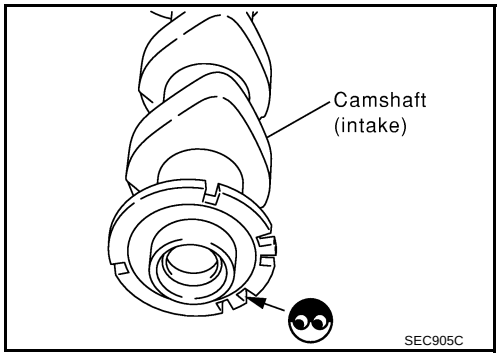

OK or NG

OK >> GO TO 6.
NG >> Remove debris and clean the signal plate of camshaft rear end or replace camshaft.

6. CHECK TIMING CHAIN INSTALLATION

Check service records for any recent repairs that may cause timing chain misaligned.

Are there any service records that may cause timing chain misaligned?

Yes or No

Yes >> Check timing chain installation. Refer to EM-64, "TIMING CHAIN" .
No >> GO TO 7.

7. CHECK LUBRICATION CIRCUIT

Refer to EM-72, "INSPECTION AFTER REMOVAL" .

OK or NG

OK >> GO TO 8.
NG >> Clean lubrication line.

8. CHECK INTERMITTENT INCIDENT

Refer to EC-163, "TROUBLE DIAGNOSIS FOR INTERMITTENT INCIDENT" .
For Wiring Diagram, refer to EC-302 for CKP sensor (POS) and EC-309 for CMP sensor (PHASE).

>> **INSPECTION END**

Component Inspection

ABS00E97

INTAKE VALVE TIMING CONTROL SOLENOID VALVE

1. Disconnect intake valve timing control solenoid valve harness connector.
2. Check resistance between intake valve timing control solenoid valve as follows.

Terminal	Resistance
1 and 2	7.0 - 7.5Ω [at 20°C (68°F)]
1 or 2 and ground	∞Ω (Continuity should not exist.)

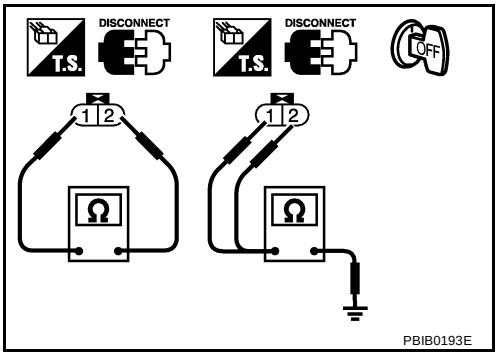

If NG, replace intake valve timing control solenoid valve.
If OK, go to next step.

3. Remove intake valve timing control solenoid valve.
4. Provide 12V DC between intake valve timing control solenoid valve terminals and then interrupt it. Make sure that the plunger moves as shown in the figure.

CAUTION:
Do not apply 12V DC continuously for 5 seconds or more. Doing so may result in damage to the coil in intake valve timing control solenoid valve.
If NG, replace intake valve timing control solenoid valve.

NOTE:
Always replace O-ring when intake valve timing control solenoid valve is removed.

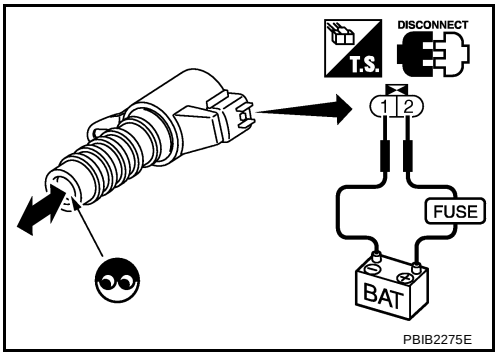

Removal and Installation

ABS00E98

INTAKE VALVE TIMING CONTROL SOLENOID VALVE

Refer to EM-64, "TIMING CHAIN" .

DTC P0037, P0038, P0057, P0058 HO2S2 HEATER

PFP:226A0

Description

ABS006LR

SYSTEM DESCRIPTION

Sensor	Input signal to ECM	ECM function	Actuator
Camshaft position sensor (PHASE) Crankshaft position sensor (POS)	Engine speed	Heated oxygen sensor 2 heater control	Heated oxygen sensor 2 heater
Engine coolant temperature sensor	Engine coolant temperature		
Mass air flow sensor	Amount of intake air		

The ECM performs ON/OFF control of the heated oxygen sensor 2 heater corresponding to the engine speed, amount of intake air and engine coolant temperature.

OPERATION

Engine speed rpm	Heated oxygen sensor 2 heater
Above 3,600	OFF
Below 3,600 rpm after the following conditions are met. ● Engine: After warming up ● Keeping the engine speed between 3,500 and 4,000 rpm for 1 minute and at idle for 1 minute under no load	ON

CONSULT-II Reference Value in Data Monitor Mode

ABS006LS

Specification data are reference values.

MONITOR ITEM	CONDITION	SPECIFICATION
HO2S2 HTR (B1) HO2S2 HTR (B2)	● Engine speed is below 3,600 rpm after the following conditions are met. – Engine: After warming up – Keeping the engine speed between 3,500 and 4,000 rpm for 1 minute and at idle for 1 minute under no load	ON
	● Engine speed: Above 3,600 rpm	OFF

On Board Diagnosis Logic

ABS006LT

DTC No.	Trouble diagnosis name	DTC detecting condition	Possible cause
P0037 0037 (Bank 1)	Heated oxygen sensor 2 heater control circuit low	The current amperage in the heated oxygen sensor 2 heater circuit is out of the normal range. (An excessively low voltage signal is sent to ECM through the heated oxygen sensor 2 heater.)	● Harness or connectors (The heated oxygen sensor 2 heater circuit is open or shorted.) ● Heater oxygen sensor 2 heater
P0057 0057 (Bank 2)			
P0038 0038 (Bank 1)	Heated oxygen sensor 2 heater control circuit high	The current amperage in the heated oxygen sensor 2 heater circuit is out of the normal range. (An excessively high voltage signal is sent to ECM through the heated oxygen sensor 2 heater.)	● Harness or connectors (The heated oxygen sensor 2 heater circuit is shorted.) ● Heater oxygen sensor 2 heater
P0058 0058 (Bank 2)			

DTC Confirmation Procedure

ABS006LU

NOTE:
If DTC Confirmation Procedure has been previously conducted, always turn ignition switch OFF and wait at least 10 seconds before conducting the next test.

TESTING CONDITION:
Before performing the following procedure, confirm that battery voltage is between 10.5V and 16V at idle.

WITH CONSULT-II

1. Turn ignition switch ON and select “DATA MONITOR” mode with CONSULT-II.
2. Start engine and warm it up to the normal operating temperature.
3. Turn ignition switch OFF and wait at least 10 seconds.
4. Start the engine and keep the engine speed between 3,500 rpm and 4,000 rpm for at least 1 minute under no load.
5. Let engine idle for 1 minute.
6. If 1st trip DTC is detected, go to EC-183, "Diagnostic Procedure".

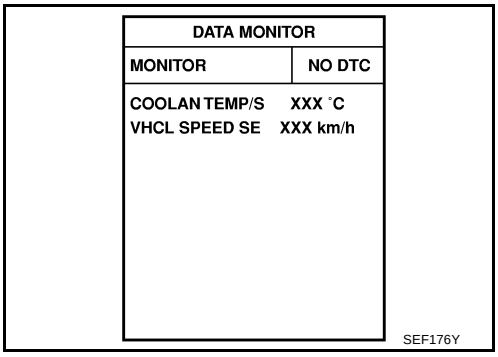

WITH GST

Follow the procedure “WITH CONSULT-II” above.

Wiring Diagram
BANK 1

ABS006LV

EC-O2H2B1-01

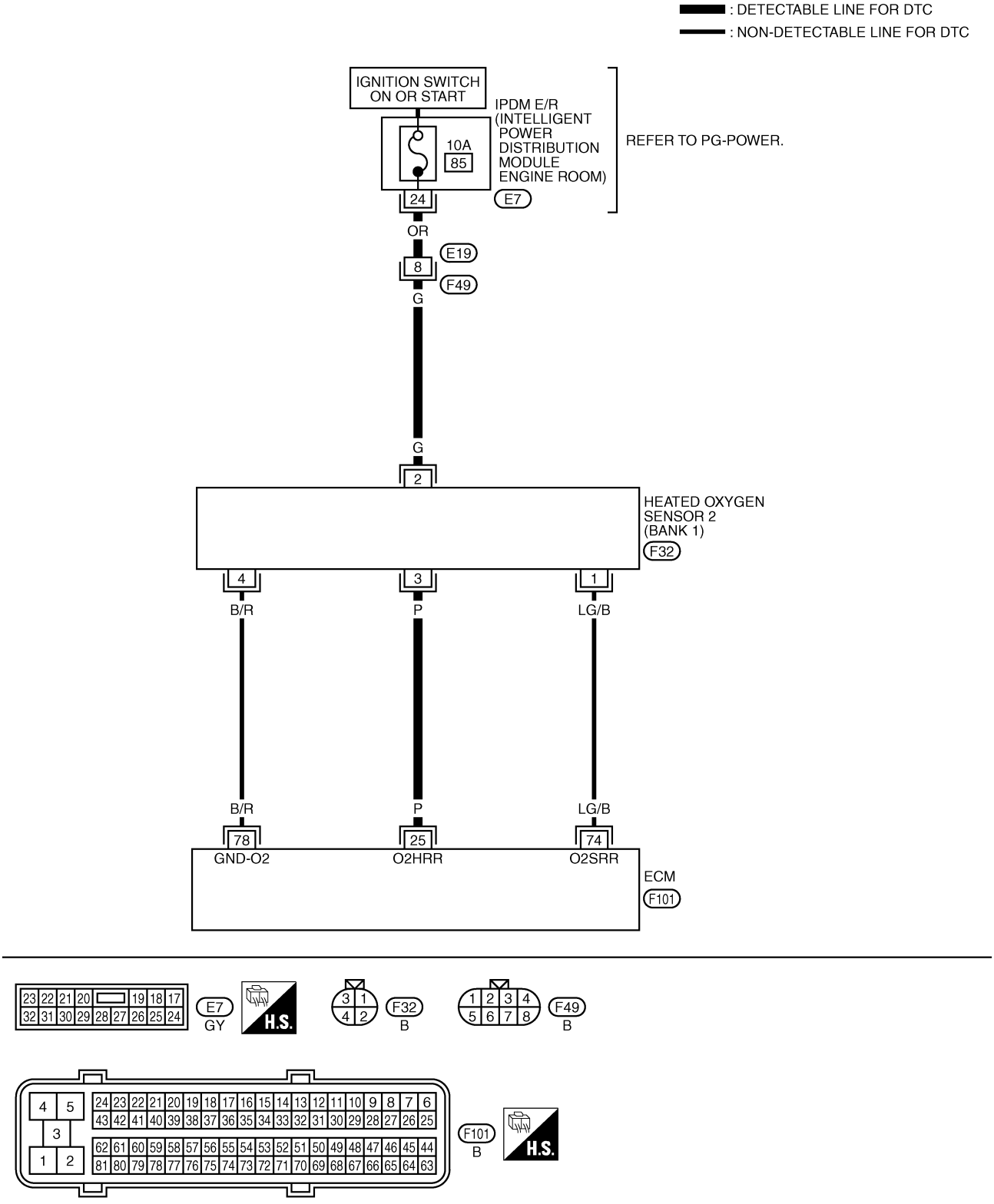

TBWM0285E

Specification data are reference values and are measured between each terminal and ground.

CAUTION:

Do not use ECM ground terminals when measuring input/output voltage. Doing so may result in damage to the ECM's transistor. Use a ground other than ECM terminals, such as the ground.

TERMINAL NO.	WIRE COLOR	ITEM	CONDITION	DATA (DC Voltage)
25	P	Heated oxygen sensor 2 heater (bank 1)	**[Engine is running]** ● Engine speed is below 3,600 rpm after the following conditions are met – Engine: after warming up – Keeping the engine speed between 3,500 and 4,000 rpm for 1 minute and at idle for 1 minute under no load	0 - 1.0V
			[Ignition switch: ON] ● Engine stopped **[Engine is running]** ● Engine speed is above 3,600 rpm	BATTERY VOLTAGE (11 - 14V)

BANK 2

EC-O2H2B2-01

: DETECTABLE LINE FOR DTC
: NON-DETECTABLE LINE FOR DTC

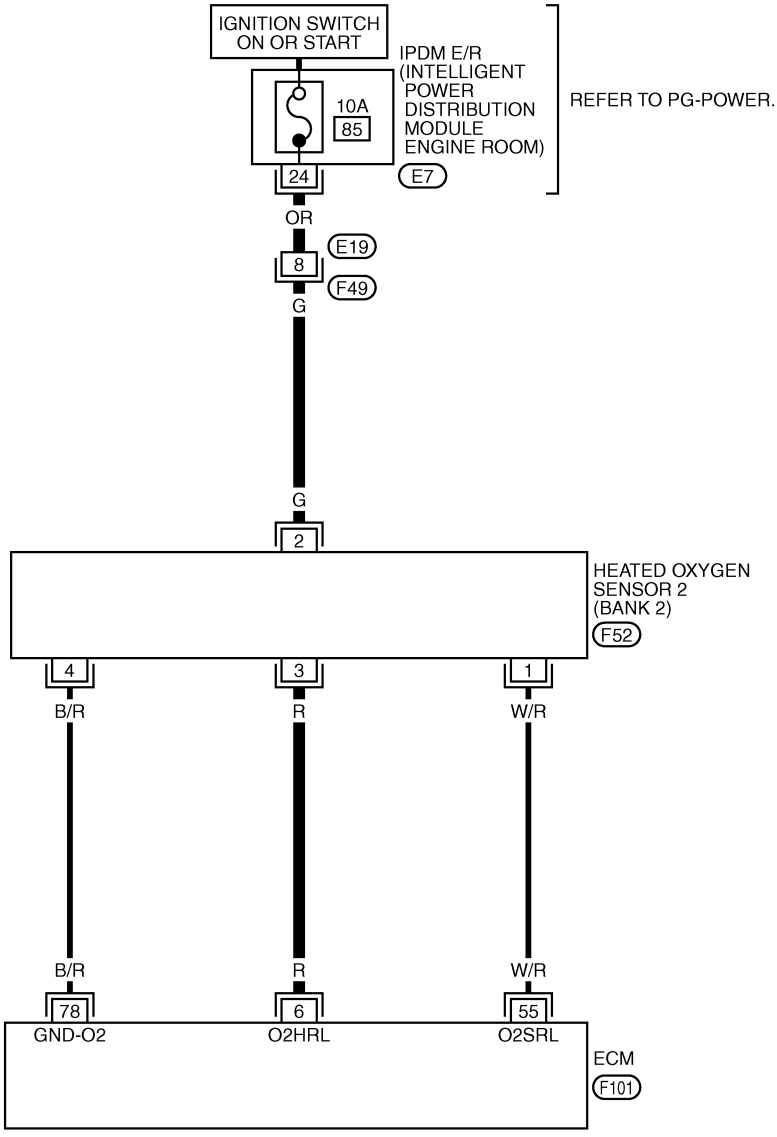

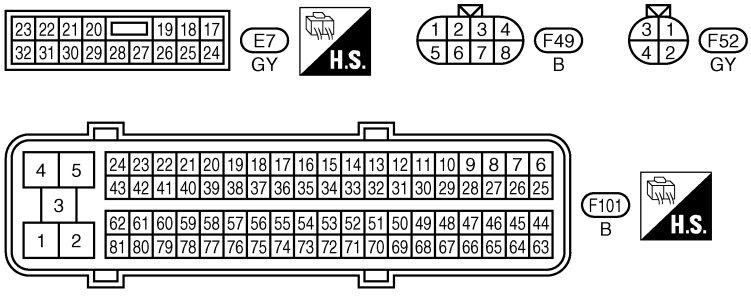

TBWM0286E

Specification data are reference values and are measured between each terminal and ground.

CAUTION:
Do not use ECM ground terminals when measuring input/output voltage. Doing so may result in damage to the ECM's transistor. Use a ground other than ECM terminals, such as the ground.

TERMINAL NO.	WIRE COLOR	ITEM	CONDITION	DATA (DC Voltage)
6	R	Heated oxygen sensor 2 heater (bank 2)	**[Engine is running]** ● Engine speed is below 3,600 rpm after the following conditions are met. – Engine: after warming up – Keeping the engine speed between 3,500 and 4,000 rpm for 1 minute and at idle for 1 minute under no load	0 - 1.0V
			[Ignition switch: ON] ● Engine stopped **[Engine is running]** ● Engine speed is above 3,600 rpm	BATTERY VOLTAGE (11 - 14V)

Diagnostic Procedure

ABS006LW

1. CHECK GROUND CONNECTIONS

1. Turn ignition switch OFF.
2. Loosen and retighten ground three screws on the body. Refer to EC-170, "Ground Inspection" .

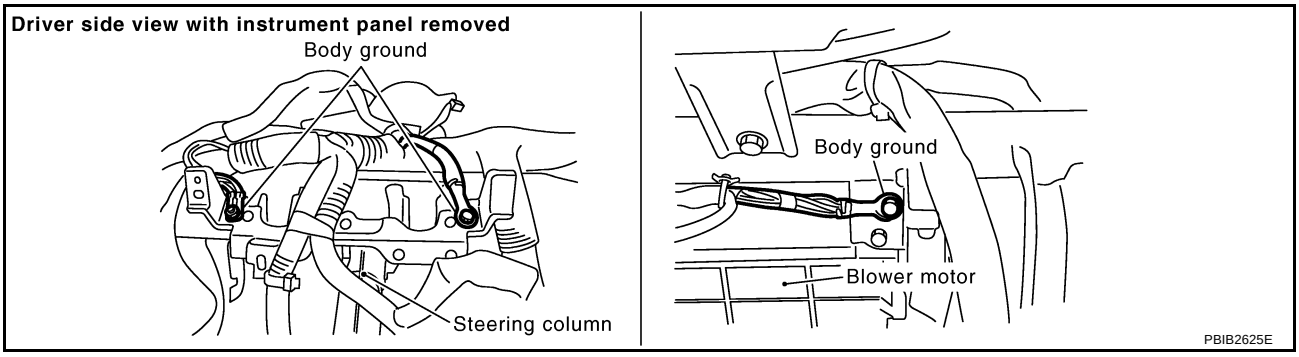

OK or NG

OK >> GO TO 2.
NG >> Repair or replace ground connections.

2. CHECK HO2S2 POWER SUPPLY CIRCUIT

1. Disconnect heated oxygen sensor 2 harness connector.
2. Turn ignition switch ON.

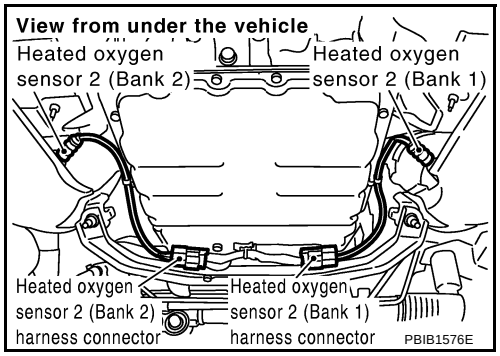

3. Check voltage between HO2S2 terminal 2 and ground with CONSULT-II or tester.

Voltage: Battery voltage

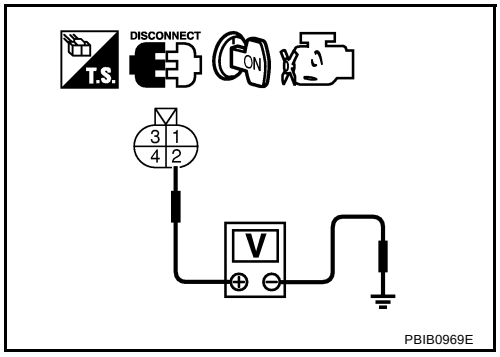

OK or NG

OK >> GO TO 4.
NG >> GO TO 3.

3. DETECT MALFUNCTIONING PART

Check the following.

- Harness connectors E19, F49
- IPDM E/R harness connector E7
- 10A fuse
- Harness for open or short between heated oxygen sensor 2 and fuse

>> Repair open circuit or short ground or short to power in harness or connectors.

4. CHECK HO2S2 OUTPUT SIGNAL CIRCUIT FOR OPEN AND SHORT

1. Turn ignition switch OFF.
2. Disconnect ECM harness connector.
3. Check harness continuity between ECM terminal and HO2S2 terminal as follows. Refer to Wiring Diagram.

DTC	Terminals		Bank
	ECM	Sensor	
P0037, P0038	25	3	1
P0057, P0058	6	3	2

Continuity should exist.

4. Also check harness for short to ground and short to power.

OK or NG

OK >> GO TO 5.
NG >> Repair open circuit or short to ground or short to power in harness or connectors.

5. CHECK HEATED OXYGEN SENSOR 2 HEATER

Refer to EC-185, "Component Inspection" .

OK or NG

OK >> GO TO 6.
NG >> Replace malfunctioning heated oxygen sensor 2.

6. CHECK INTERMITTENT INCIDENT

Refer to EC-163, "TROUBLE DIAGNOSIS FOR INTERMITTENT INCIDENT" .

>> **INSPECTION END**

Component Inspection

ABS006LX

HEATED OXYGEN SENSOR 2 HEATER

1. Check resistance between HO2S2 terminals as follows.

Terminal No.	Resistance
2 and 3	5.0 - 7.0 Ω [at 25°C (77°F)]
1 and 2, 3, 4	∞ Ω (Continuity should not exist)
4 and 1, 2, 3	

2. If NG, replace heated oxygen sensor 2.

CAUTION:

- **Discard any heated oxygen sensor which has been dropped from a height of more than 0.5 m (19.7 in) onto a hard surface such as a concrete floor; use a new one.**
- **Before installing new oxygen sensor, clean exhaust system threads using Oxygen Sensor Thread Cleaner tool J-43897-18 or J-43897-12 and approved anti-seize lubricant.**

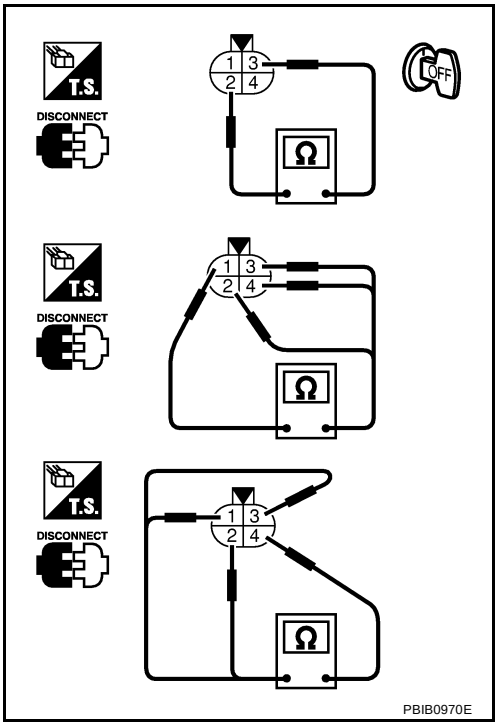

Removal and Installation

ABS006LY

HEATED OXYGEN SENSOR 2

Refer to EM-26, "EXHAUST MANIFOLD AND THREE WAY CATALYST" .

DTC P0101 MAF SENSOR

PFP:22680

Component Description

ABS006LZ

The mass air flow sensor is placed in the stream of intake air. It measures the intake flow rate by measuring a part of the entire intake flow. The mass air flow sensor controls the temperature of the hot wire to a certain amount. The heat generated by the hot wire is reduced as the intake air flows around it. The more air, the greater the heat loss.
Therefore, the electric current supplied to hot wire is changed to maintain the temperature of the hot wire as air flow increases. The ECM detects the air flow by means of this current change.

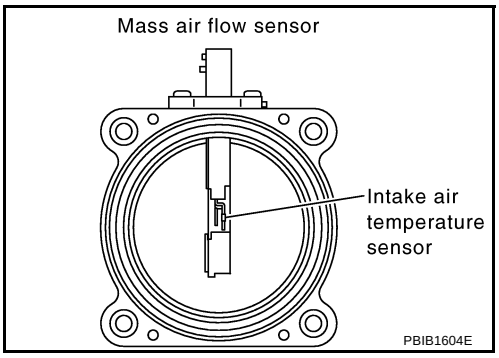

CONSULT-II Reference Value in Data Monitor Mode

ABS006M0

Specification data are reference values.

MONITOR ITEM	CONDITION		SPECIFICATION
MAS A/F SE-B1	See EC-153, "TROUBLE DIAGNOSIS - SPECIFICATION VALUE" .		
CAL/LD VALUE	● Engine: After warming up ● Selector lever: P or N ● Air conditioner switch: OFF ● No-load	Idle	5% - 35%
		2,500 rpm	5% - 35%
MASS AIRFLOW	● Engine: After warming up ● Selector lever: P or N ● Air conditioner switch: OFF ● No-load	Idle	2.0 - 6.0 g·m/s
		2,500 rpm	7.0 - 20.0 g·m/s

On Board Diagnosis Logic

ABS006M1

DTC No.	Trouble diagnosis name	DTC detecting condition		Possible cause
P0101 0101	Mass air flow sensor circuit range/performance problem	A)	A high voltage from the sensor is sent to ECM under light load driving condition.	● Harness or connectors (The sensor circuit is open or shorted.) ● Mass air flow sensor ● EVAP control system pressure sensor ● Intake air temperature sensor
		B)	A low voltage from the sensor is sent to ECM under heavy load driving condition.	● Harness or connectors (The sensor circuit is open or shorted.) ● Intake air leaks ● Mass air flow sensor ● EVAP control system pressure sensor ● Intake air temperature sensor

DTC Confirmation Procedure

ABS006M2

Perform PROCEDURE FOR MALFUNCTION A first.
If the DTC cannot be confirmed, perform PROCEDURE FOR MALFUNCTION B.

NOTE:
If DTC Confirmation Procedure has been previously conducted, always turn ignition switch OFF and wait at least 10 seconds before conducting the next test.

PROCEDURE FOR MALFUNCTION A

NOTE:
If engine will not start or stops soon, wait at least 10 seconds with engine stopped (Ignition switch ON) instead of running engine at idle speed.

With CONSULT-II

1. Turn ignition switch ON.
2. Select “DATA MONITOR” mode with CONSULT-II.
3. Start engine and warm it up to normal operating temperature.
4. Run engine for at least 10 seconds at idle speed.
5. If 1st trip DTC is detected, go to EC-190, "Diagnostic Procedure" .

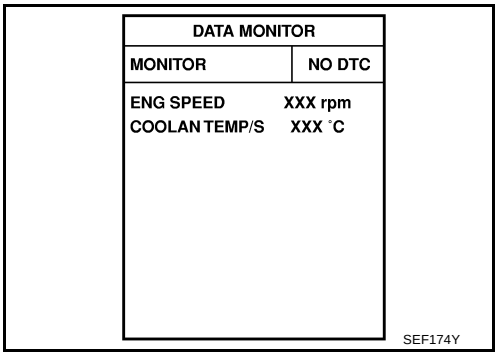

With GST

Follow the procedure “With CONSULT-II” above.

PROCEDURE FOR MALFUNCTION B

CAUTION:
Always drive vehicle at a safe speed.

With CONSULT-II

1. Turn ignition switch ON.
2. Start engine and warm it up to normal operating temperature.
   If engine cannot be started, go to EC-190, "Diagnostic Procedure" .
3. Select “DATA MONITOR” mode with CONSULT-II.
4. Check the voltage of “MAS A/F SE-B1” with “DATA MONITOR”.
5. Increases engine speed to about 4,000 rpm.
6. Monitor the linear voltage rise in response to engine speed increases.
   If NG, go to EC-190, "Diagnostic Procedure" .
   If OK, go to following step.

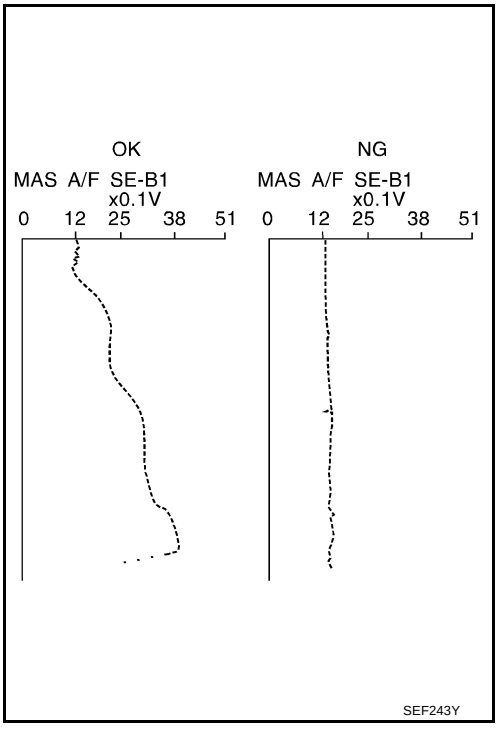

7. Maintain the following conditions for at least 10 consecutive seconds.

ENG SPEED	More than 2,000 rpm
THRTL SEN 1	More than 3V
THRTL SEN 2	More than 3V
Selector lever	Suitable position
Driving location	Driving vehicle uphill (Increased engine load) will help maintain the driving conditions required for this test.

8. If 1st trip DTC is detected, go to EC-190, "Diagnostic Procedure" .

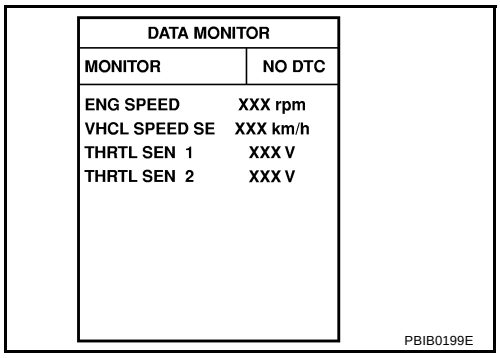

Overall Function Check

ABS006M3

PROCEDURE FOR MALFUNCTION B

Use this procedure to check the overall function of the mass air flow sensor circuit. During this check, a 1st trip DTC might not be confirmed.

With GST

1. Start engine and warm it up to normal operating temperature.
2. Select Service $01 with GST.
3. Check the mass air flow sensor signal with Service $01.
4. Check for linear mass air flow sensor signal value rise in response to increases to about 4,000 rpm in engine speed.
5. If NG, go to EC-190, "Diagnostic Procedure" .

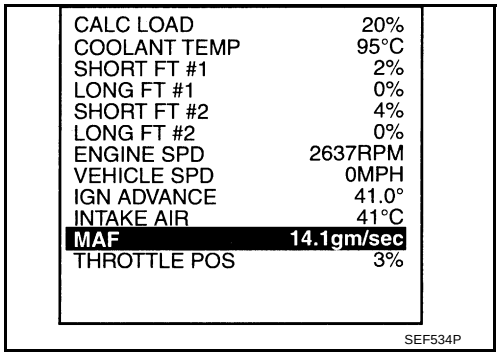

Wiring Diagram

ABS006M4

EC-MAFS-01

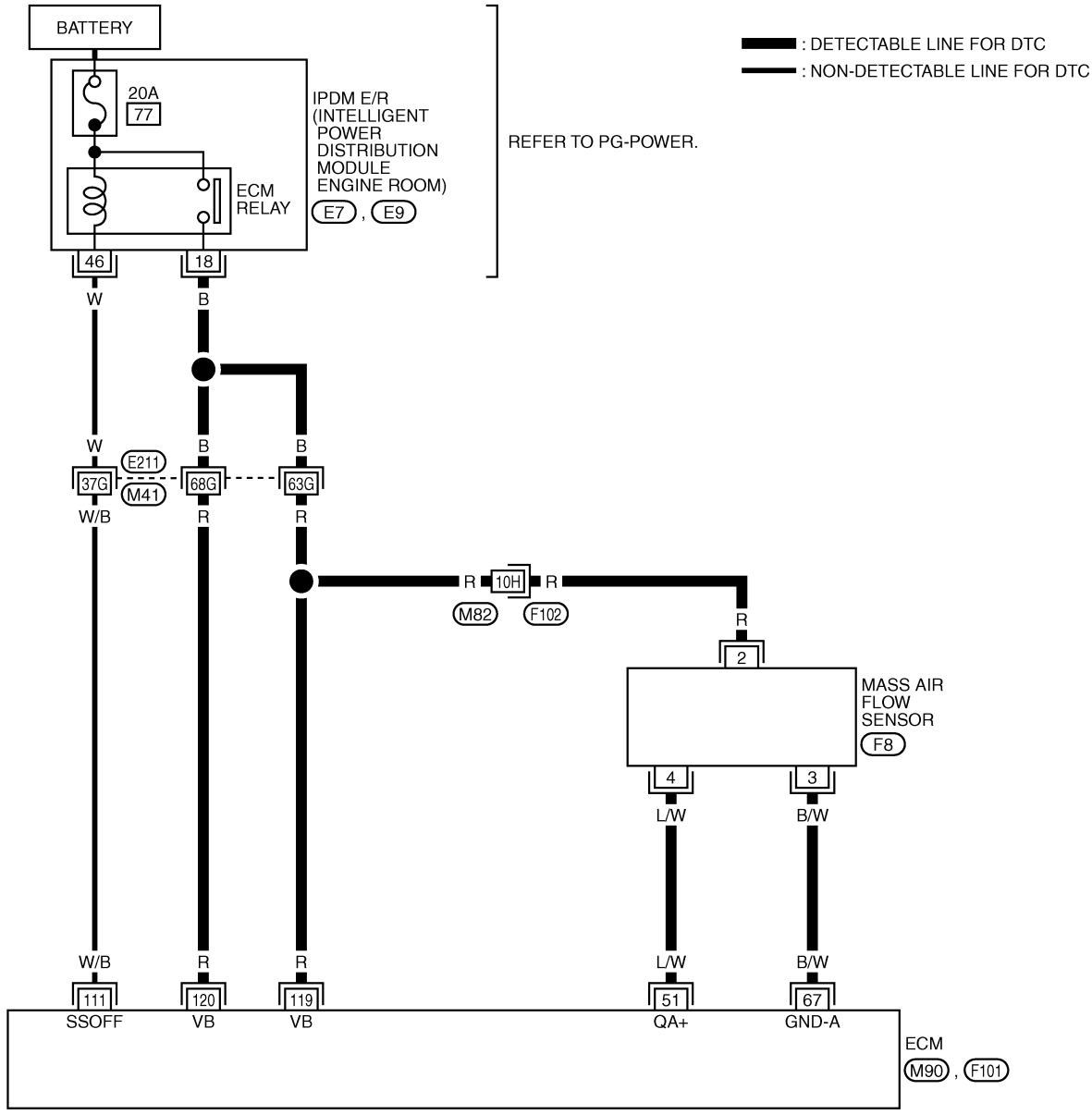

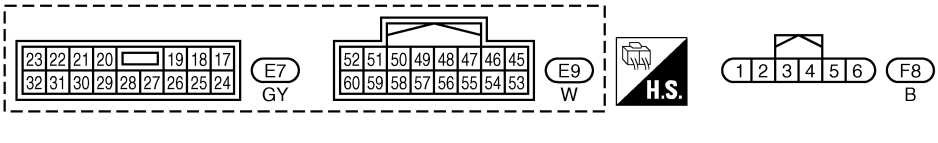

REFER TO THE FOLLOWING.
E211 , F102 -SUPER MULTIPLE JUNCTION (SMJ)

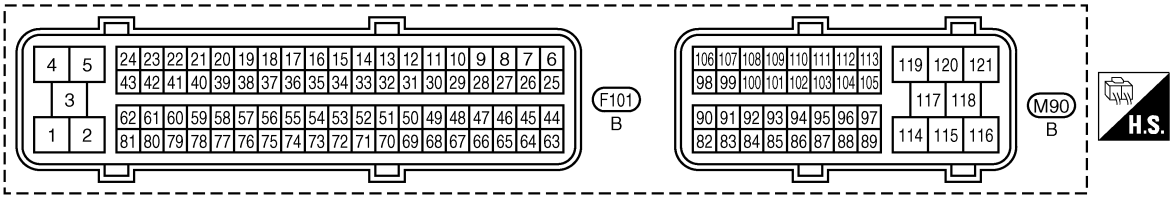

TBWM0392E

Specification data are reference values and are measured between each terminal and ground.

CAUTION:

Do not use ECM ground terminals when measuring input/output voltage. Doing so may result in damage to the ECM's transistor. Use a ground other than ECM terminals, such as the ground.

TERMINAL NO.	WIRE COLOR	ITEM	CONDITION	DATA (DC Voltage)
51	L/W	Mass air flow sensor	**[Engine is running]** ● **Warm-up condition** ● Idle speed	1.0 - 1.2V
			[Engine is running] ● **Warm-up condition** ● Engine speed is 2,500 rpm	1.6 - 2.0V
67	B/W	Sensor ground	**[Engine is running]** ● **Warm-up condition** ● Idle speed	Approximately 0V
111	W/B	ECM relay (Self shut-off)	**[Engine is running]** **[Ignition switch: OFF]** ● For a few seconds after turning ignition switch OFF	0 - 1.5V
			[Ignition switch: OFF] ● More than a few seconds after turning ignition switch OFF	BATTERY VOLTAGE (11 - 14V)
119 120	R R	Power supply for ECM	**[Ignition switch: ON]**	BATTERY VOLTAGE (11 - 14V)

Diagnostic Procedure

ABS006M5

1. INSPECTION START

Which malfunction (A or B) is duplicated?

A or B

A >> GO TO 3.
B >> GO TO 2.

2. CHECK INTAKE SYSTEM

Check the following for connection.

- Air duct
- Vacuum hoses
- Intake air passage between air duct and intake manifold

OK or NG

OK >> GO TO 3.
NG >> Reconnect the parts.

3. CHECK GROUND CONNECTIONS

1. Turn ignition switch OFF.
2. Loosen and retighten ground three screws on the body. Refer to EC-170, "Ground Inspection" .

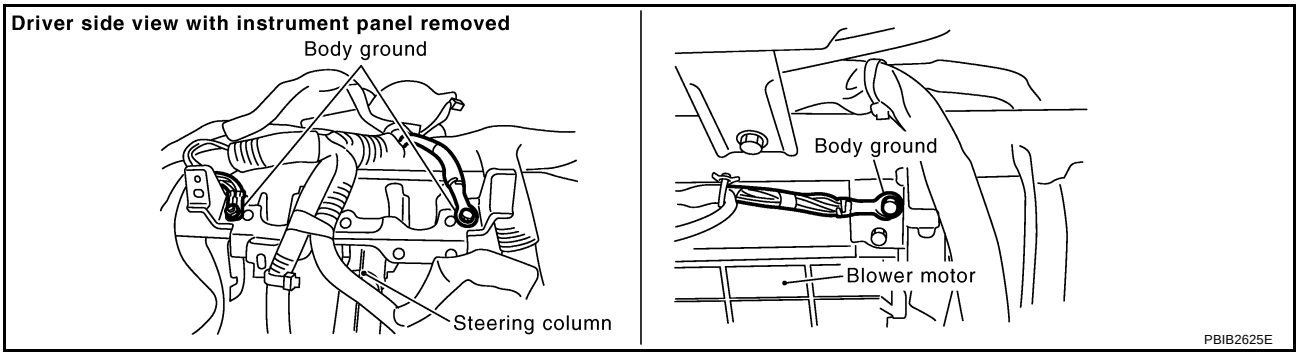

OK or NG

OK >> GO TO 4.
NG >> Repair or replace ground connections.

4. CHECK MAF SENSOR POWER SUPPLY CIRCUIT

1. Disconnect mass air flow (MAF) sensor harness connector.
2. Turn ignition switch ON.

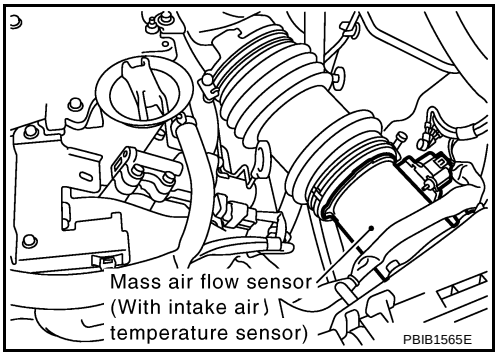

3. Check voltage between MAF sensor terminal 2 and ground with CONSULT-II or tester.

Voltage: Battery voltage

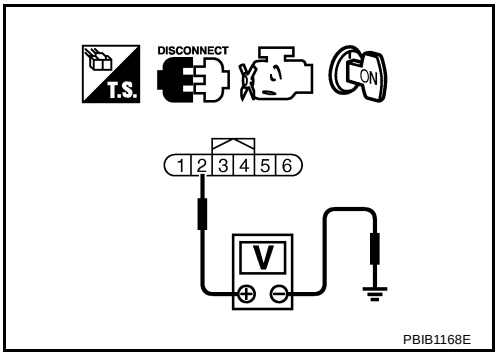

OK or NG

OK >> GO TO 6.
NG >> GO TO 5.

5. DETECT MALFUNCTIONING PART

Check the following.

- Harness connectors E211, M41
- Harness connectors M82, F102
- Harness for open or short between IPDM E/R and mass air flow sensor
- Harness for open or short between mass air flow sensor and ECM

>> Repair open circuit or short to ground or short to power in harness or connectors.

6. CHECK MAF SENSOR GROUND CIRCUIT FOR OPEN AND SHORT

1. Turn ignition switch OFF.
2. Disconnect ECM harness connector.
3. Check harness continuity between MAF sensor terminal 3 and ECM terminal 67.
   Refer to Wiring Diagram.

   Continuity should exist.

4. Also check harness for short to ground and short to power.

OK or NG

OK >> GO TO 7.
NG >> Repair open circuit or short to ground or short to power in harness or connectors.

7. CHECK MAF SENSOR INPUT SIGNAL CIRCUIT FOR OPEN AND SHORT

1. Check harness continuity between MAF sensor terminal 4 and ECM terminal 51.
   Refer to Wiring Diagram.

   Continuity should exist.

2. Also check harness for short to ground and short to power.

OK or NG

OK >> GO TO 8.
NG >> Repair open circuit or short to ground or short to power in harness or connectors.

8. CHECK INTAKE AIR TEMPERATURE SENSOR

Refer to EC-207, "Component Inspection" .

OK or NG

OK >> GO TO 9.
NG >> Replace intake air temperature sensor.

9. CHECK EVAP CONTROL SYSTEM PRESSURE SENSOR

Refer to EC-352, "Component Inspection" .

OK or NG

OK >> GO TO 10.
NG >> Replace EVAP control system pressure sensor.

10. CHECK MASS AIR FLOW SENSOR

Refer to EC-193, "Component Inspection" .

OK or NG

OK >> GO TO 11.
NG >> Replace mass air flow sensor.

11. CHECK INTERMITTENT INCIDENT

Refer to EC-163, "TROUBLE DIAGNOSIS FOR INTERMITTENT INCIDENT" .

>> **INSPECTION END**

Component Inspection

ABS006M6

MASS AIR FLOW SENSOR

With CONSULT-II

1. Reconnect all harness connectors disconnected.
2. Start engine and warm it up to normal operating temperature.
3. Connect CONSULT-II and select “DATA MONITOR” mode.
4. Select “MAS A/F SE-B1” and check indication under the following conditions.

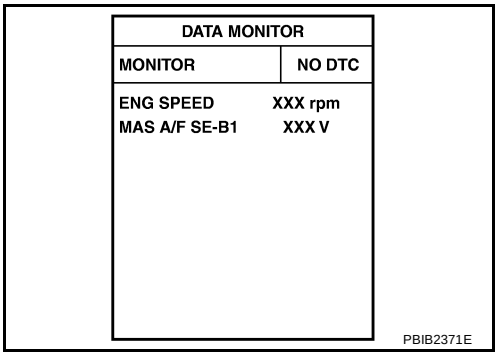

Condition	MAS A/F SE-B1 (V)
Ignition switch ON (Engine stopped.)	Approx. 0.4
Idle (Engine is warmed-up to normal operating temperature.)	1.0 - 1.2
2,500 rpm (Engine is warmed-up to normal operating temperature.)	1.6 - 2.0
Idle to about 4,000 rpm*	1.0 - 1.2 to Approx. 2.4

*: Check for linear voltage rise in response to engine being increased to about 4,000 rpm.

5. If the voltage is out of specification, proceed the following.

a. Check for the cause of uneven air flow through mass air flow sensor. Refer to following.
   - Crushed air ducts
   - Malfunctioning seal of air cleaner element
   - Uneven dirt of air cleaner element
   - Improper specification of intake air system parts

b. If NG, repair or replace malfunctioning part and perform step 2 to 4 again.
   If OK, go to next step.

6. Turn ignition switch OFF.
7. Disconnect mass air flow sensor harness connector and reconnect it again.
8. Perform step 2 to 4 again.
9. If NG, clean or replace mass air flow sensor.

Without CONSULT-II

1. Reconnect all harness connectors disconnected.
2. Start engine and warm it up to normal operating temperature.
3. Check voltage between ECM terminal 51 (Mass air flow sensor signal) and ground.

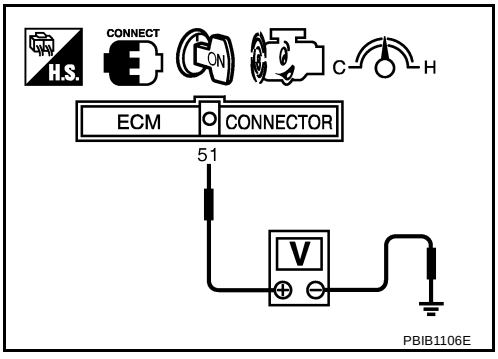

Condition	Voltage V
Ignition switch ON (Engine stopped.)	Approx. 0.4
Idle (Engine is warmed-up to normal operating temperature.)	1.0 - 1.2
2,500 rpm (Engine is warmed-up to normal operating temperature.)	1.6 - 2.0
Idle to about 4,000 rpm*	1.0 - 1.2 to Approx. 2.4

*: Check for linear voltage rise in response to engine being increased to about 4,000 rpm.

4. If the voltage is out of specification, proceed the following.

a. Check for the cause of uneven air flow through mass air flow sensor. Refer to following.
   - Crushed air ducts
   - Malfunctioning seal of air cleaner element
   - Uneven dirt of air cleaner element
   - Improper specification of intake air system parts

b. If NG, repair or replace malfunctioning part and perform step 2 to 3 again.
If OK, go to next step.

5. Turn ignition switch OFF.
6. Disconnect mass air flow sensor harness connector and reconnect it again.
7. Perform step 2 and 3 again.
8. If NG, clean or replace mass air flow sensor.

Removal and Installation

ABS006M7

MASS AIR FLOW SENSOR

Refer to EM-17, "AIR CLEANER AND AIR DUCT" .

DTC P0102, P0103 MAF SENSOR

PFP:22680

Component Description

ABS006M8

The mass air flow sensor is placed in the stream of intake air. It measures the intake flow rate by measuring a part of the entire intake flow. The mass air flow sensor controls the temperature of the hot wire to a certain amount. The heat generated by the hot wire is reduced as the intake air flows around it. The more air, the greater the heat loss.
Therefore, electric current is supplied to hot wire is changed to maintain the temperature of the hot wire as air flow increases. The ECM detects the air flow by means of this current change.

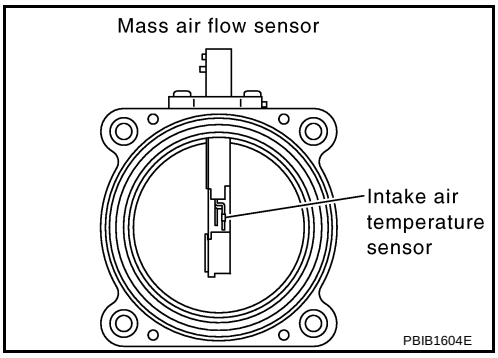

CONSULT-II Reference Value in Data Monitor Mode

ABS006M9

Specification data are reference values.

MONITOR ITEM	CONDITION		SPECIFICATION
MAS A/F SE-B1	See EC-153, "TROUBLE DIAGNOSIS - SPECIFICATION VALUE" .		
CAL/LD VALUE	● Engine: After warming up ● Selector lever: P or N ● Air conditioner switch: OFF ● No-load	Idle	5% - 35%
		2,500 rpm	5% - 35%
MASS AIRFLOW	● Engine: After warming up ● Selector lever: P or N ● Air conditioner switch: OFF ● No-load	Idle	2.0 - 6.0 g·m/s
		2,500 rpm	7.0 - 20.0 g·m/s

On Board Diagnosis Logic

ABS006MA

These self-diagnoses have the one trip detection logic.

DTC No.	Trouble diagnosis name	DTC detecting condition	Possible cause
P0102 0102	Mass air flow sensor circuit low input	An excessively low voltage from the sensor is sent to ECM.	● Harness or connectors (The sensor circuit is open or shorted.) ● Intake air leaks ● Mass air flow sensor
P0103 0103	Mass air flow sensor circuit high input	An excessively high voltage from the sensor is sent to ECM.	● Harness or connectors (The sensor circuit is open or shorted.) ● Mass air flow sensor

FAIL-SAFE MODE

When the malfunction is detected, the ECM enters fail-safe mode and the MIL lights up.

Detected items	Engine operating condition in fail-safe mode
Mass air flow sensor circuit	Engine speed will not rise more than 2,400 rpm due to the fuel cut.

DTC Confirmation Procedure

ABS006MB

NOTE:
If DTC Confirmation Procedure has been previously conducted, always turn ignition switch OFF and wait at least 10 seconds before conducting the next test.

PROCEDURE FOR DTC P0102

With CONSULT-II

1. Turn ignition switch ON.
2. Select “DATA MONITOR” mode with CONSULT-II.
3. Start engine and wait at least 5 seconds.
4. If DTC is detected, go to EC-198, "Diagnostic Procedure" .

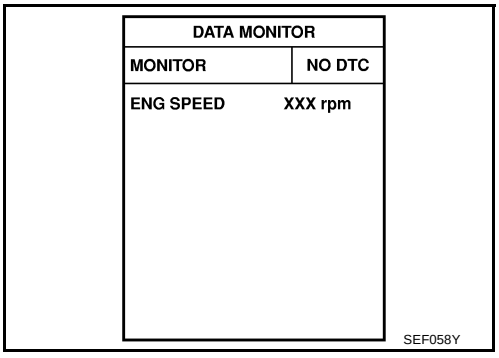

With GST

Follow the procedure “With CONSULT-II” above.

PROCEDURE FOR DTC P0103

With CONSULT-II

1. Turn ignition switch ON.
2. Select “DATA MONITOR” mode with CONSULT-II.
3. Wait at least 5 seconds.
4. If DTC is detected, go to EC-198, "Diagnostic Procedure" .
   If DTC is not detected, go to next step.
5. Start engine and wait at least 5 seconds.
6. If DTC is detected, go to EC-198, "Diagnostic Procedure" .

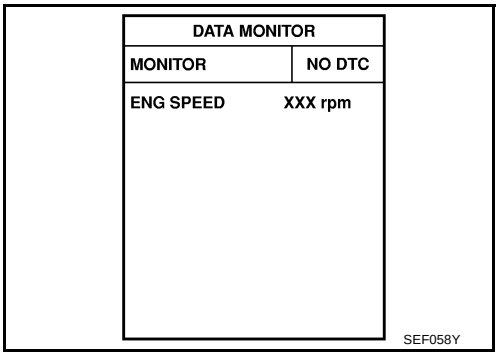

With GST

Follow the procedure “With CONSULT-II” above.

Wiring Diagram

ABS006MC

EC-MAFS-01

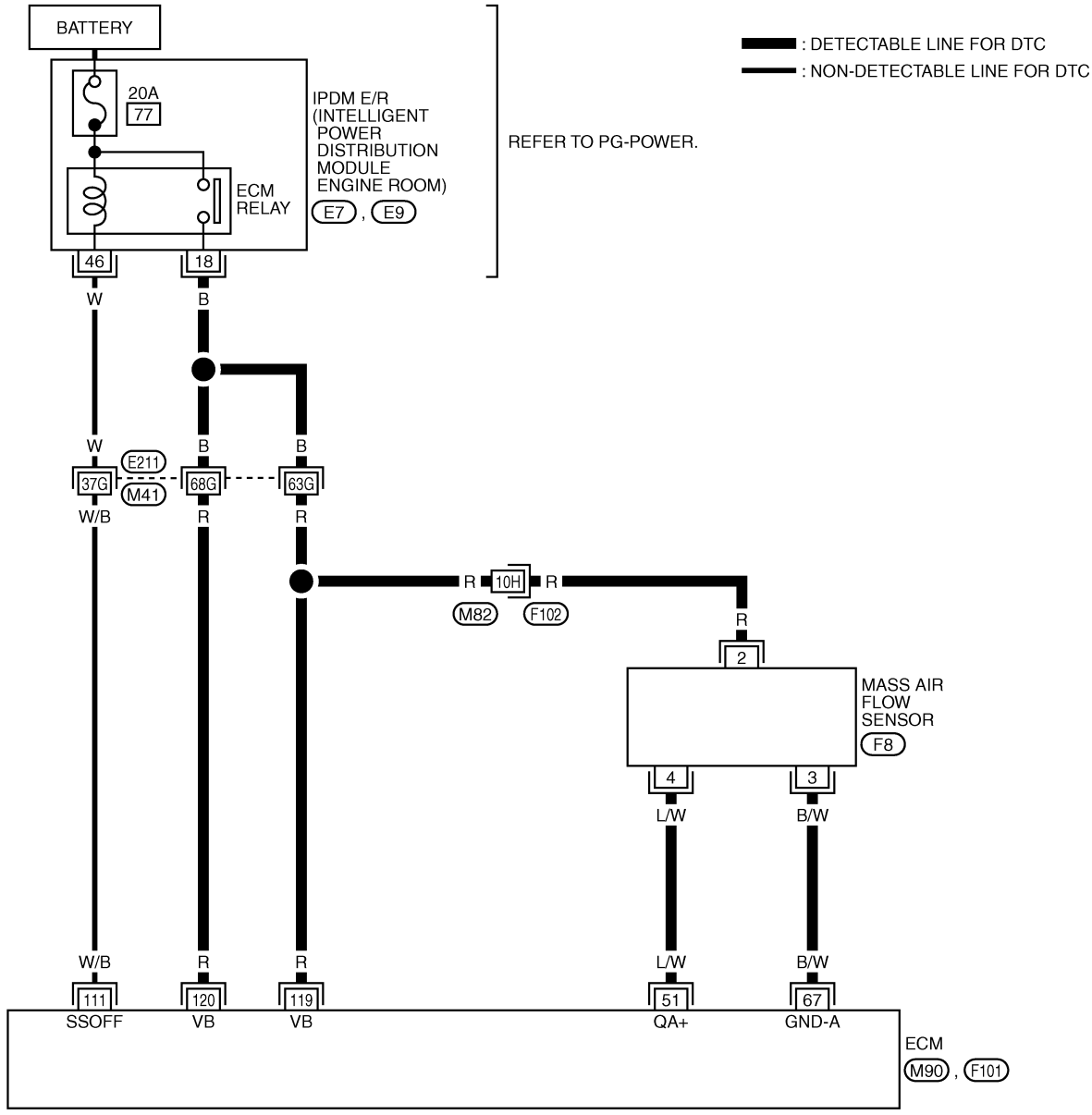

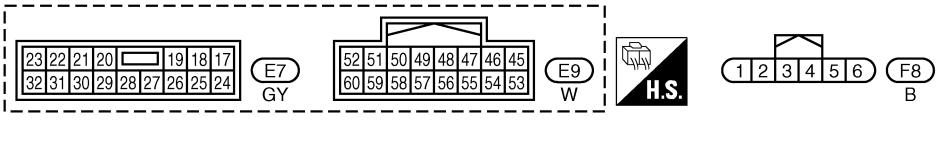

REFER TO THE FOLLOWING.
E211 , F102 -SUPER MULTIPLE JUNCTION (SMJ)

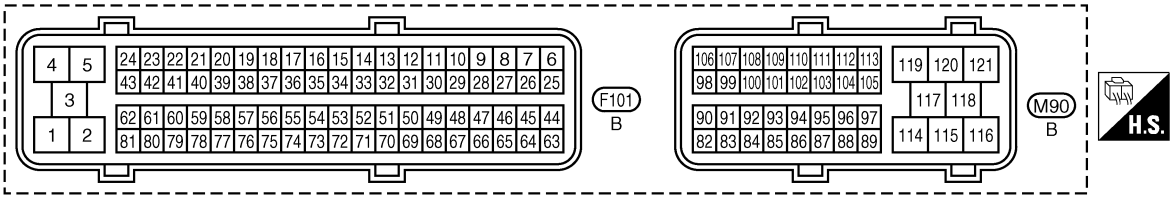

TBWM0392E

Specification data are reference values and are measured between each terminal and ground.

CAUTION:
Do not use ECM ground terminals when measuring input/output voltage. Doing so may result in damage to the ECM's transistor. Use a ground other than ECM terminals, such as the ground.

TERMINAL NO.	WIRE COLOR	ITEM	CONDITION	DATA (DC Voltage)
51	L/W	Mass air flow sensor	**[Engine is running]** ● **Warm-up condition** ● Idle speed	1.0 - 1.2V
			[Engine is running] ● **Warm-up condition** ● Engine speed is 2,500 rpm	1.6 - 2.0V
67	B/W	Sensor ground	**[Engine is running]** ● **Warm-up condition** ● Idle speed	Approximately 0V
111	W/B	ECM relay (Self shut-off)	**[Engine is running]** **[Ignition switch: OFF]** ● For a few seconds after turning ignition switch OFF	0 - 1.5V
			[Ignition switch: OFF] ● More than a few seconds after turning ignition switch OFF	BATTERY VOLTAGE (11 - 14V)
119 120	R R	Power supply for ECM	**[Ignition switch: ON]**	BATTERY VOLTAGE (11 - 14V)

Diagnostic Procedure

ABS006MD

1. INSPECTION START

Which malfunction (P0102 or P0103) is duplicated?

P0102 or P0103

P0102 >> GO TO 2.
P0103 >> GO TO 3.

2. CHECK INTAKE SYSTEM

Check the following for connection.

- Air duct
- Vacuum hoses
- Intake air passage between air duct and intake manifold

OK or NG

OK >> GO TO 3.
NG >> Reconnect the parts.

3. CHECK GROUND CONNECTIONS

1. Turn ignition switch OFF.
2. Loosen and retighten ground three screws on the body. Refer to EC-170, "Ground Inspection" .

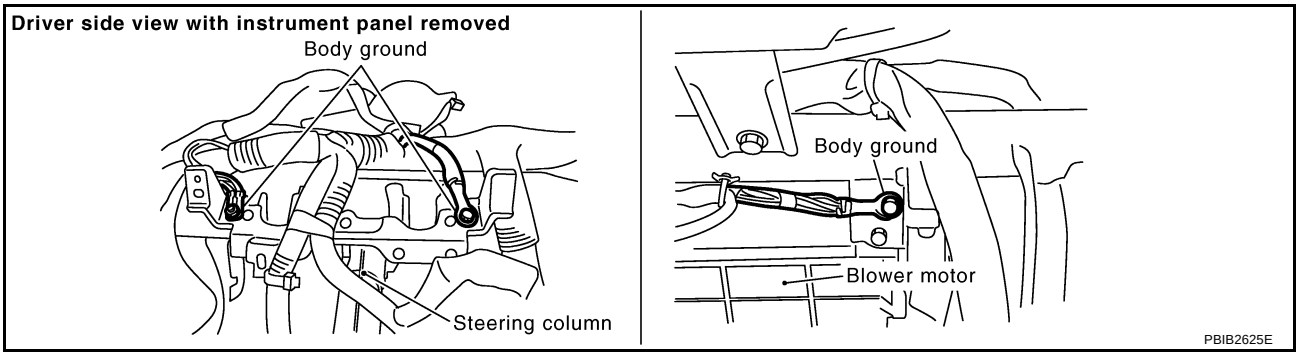

OK or NG

OK >> GO TO 4.
NG >> Repair or replace ground connections.

4. CHECK MAF SENSOR POWER SUPPLY CIRCUIT

1. Disconnect mass air flow (MAF) sensor harness connector.
2. Turn ignition switch ON.

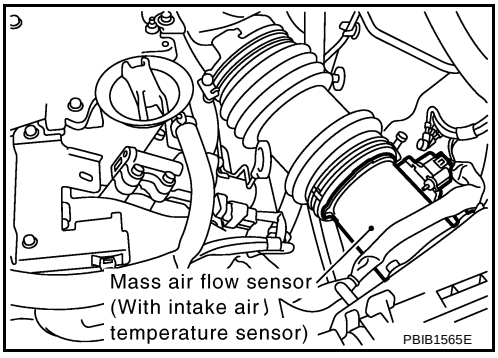

3. Check voltage between MAF sensor terminal 2 and ground with CONSULT-II or tester.

Voltage: Battery voltage

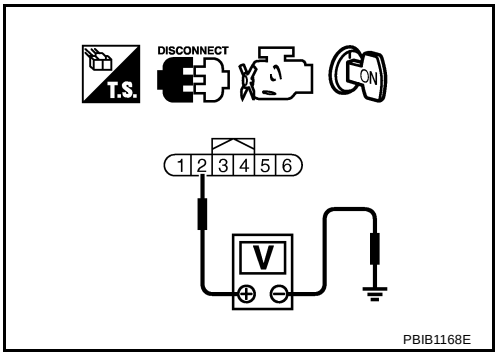

OK or NG

OK >> GO TO 6.
NG >> GO TO 5.

5. DETECT MALFUNCTIONING PART

Check the following.

- Harness connectors E211, M41
- Harness connectors M82, F102
- Harness for open or short between IPDM E/R and mass air flow sensor
- Harness for open or short between mass air flow sensor and ECM

>> Repair open circuit or short to ground or short to power in harness or connectors.

6. CHECK MAF SENSOR GROUND CIRCUIT FOR OPEN AND SHORT

1. Turn ignition switch OFF.
2. Disconnect ECM harness connector.
3. Check harness continuity between MAF sensor terminal 3 and ECM terminal 67.
   Refer to Wiring Diagram.

   Continuity should exist.

4. Also check harness for short to ground and short to power.

OK or NG

OK >> GO TO 7.
NG >> Repair open circuit or short to ground or short to power in harness or connectors.

7. CHECK MAF SENSOR INPUT SIGNAL CIRCUIT FOR OPEN AND SHORT

1. Check harness continuity between MAF sensor terminal 4 and ECM terminal 51.
   Refer to Wiring Diagram.

   Continuity should exist.

2. Also check harness for short to ground and short to power.

OK or NG

OK >> GO TO 8.
NG >> Repair open circuit or short to ground or short to power in harness or connectors.

8. CHECK MASS AIR FLOW SENSOR

Refer to EC-201, "Component Inspection" .

OK or NG

OK >> GO TO 9.
NG >> Replace mass air flow sensor.

9. CHECK INTERMITTENT INCIDENT

Refer to EC-163, "TROUBLE DIAGNOSIS FOR INTERMITTENT INCIDENT" .

>> **INSPECTION END**

Component Inspection

ABS006ME

MASS AIR FLOW SENSOR

With CONSULT-II

1. Reconnect all harness connectors disconnected.
2. Start engine and warm it up to normal operating temperature.
3. Connect CONSULT-II and select “DATA MONITOR” mode.
4. Select “MAS A/F SE-B1” and check indication under the following conditions.

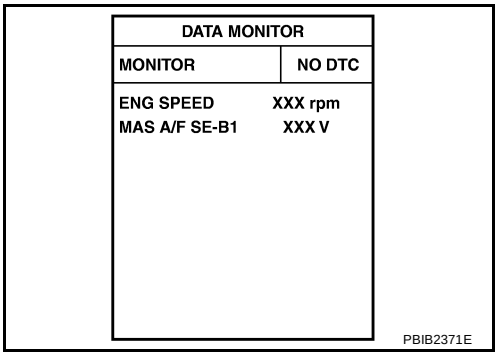

Condition	MAS A/F SE-B1 (V)
Ignition switch ON (Engine stopped.)	Approx. 0.4
Idle (Engine is warmed-up to normal operating temperature.)	1.0 - 1.2
2,500 rpm (Engine is warmed-up to normal operating temperature.)	1.6 - 2.0
Idle to about 4,000 rpm*	1.0 - 1.2 to Approx. 2.4

*: Check for linear voltage rise in response to engine being increased to about 4,000 rpm.

5. If the voltage is out of specification, proceed the following.

a. Check for the cause of uneven air flow through mass air flow sensor. Refer to following.
   - Crushed air ducts
   - Malfunctioning seal of air cleaner element
   - Uneven dirt of air cleaner element
   - Improper specification of intake air system parts

b. If NG, repair or replace malfunctioning part and perform step 2 to 4 again.
   If OK, go to next step.

6. Turn ignition switch OFF.
7. Disconnect mass air flow sensor harness connector and reconnect it again.
8. Perform step 2 to 4 again.
9. If NG, clean or replace mass air flow sensor.

Without CONSULT-II

1. Reconnect all harness connectors disconnected.
2. Start engine and warm it up to normal operating temperature.
3. Check voltage between ECM terminal 51 (Mass air flow sensor signal) and ground.

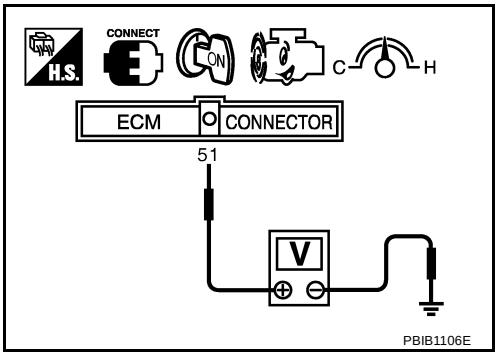

Condition	Voltage V
Ignition switch ON (Engine stopped.)	Approx. 0.4
Idle (Engine is warmed-up to normal operating temperature.)	1.0 - 1.2
2,500 rpm (Engine is warmed-up to normal operating temperature.)	1.6 - 2.0
Idle to about 4,000 rpm*	1.0 - 1.2 to Approx. 2.4

*: Check for linear voltage rise in response to engine being increased to about 4,000 rpm.

4. If the voltage is out of specification, proceed the following.

a. Check for the cause of uneven air flow through mass air flow sensor. Refer to following.
   - Crushed air ducts
   - Malfunctioning seal of air cleaner element
   - Uneven dirt of air cleaner element
   - Improper specification of intake air system parts

b. If NG, repair or replace malfunctioning part and perform step 2 to 3 again.
If OK, go to next step.
5. Turn ignition switch OFF.
6. Disconnect mass air flow sensor harness connector and reconnect it again.
7. Perform step 2 and 3 again.
8. If NG, clean or replace mass air flow sensor.

Removal and Installation

ABS006MF

MASS AIR FLOW SENSOR

Refer to EM-17, "AIR CLEANER AND AIR DUCT" .

DTC P0112, P0113 IAT SENSOR

PFP:22630

Component Description

ABS006MG

The intake air temperature sensor is built-into mass air flow sensor. The sensor detects intake air temperature and transmits a signal to the ECM.
The temperature sensing unit uses a thermistor which is sensitive to the change in temperature. Electrical resistance of the thermistor decreases in response to the temperature rise.

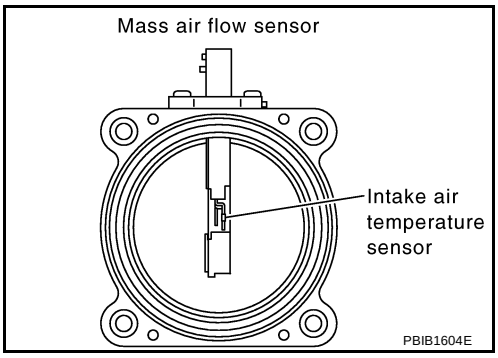

<Reference data>

Intake air temperature °C (°F)	Voltage* V	Resistance kΩ
25 (77)	3.32	1.94 - 2.06
80 (176)	1.23	0.295 - 0.349

*: This data is reference value and is measured between ECM terminal 34 (Intake air temperature sensor) and ground.

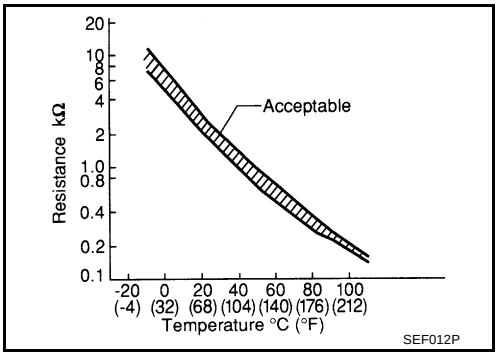

CAUTION:
Do not use ECM ground terminals when measuring input/output voltage. Doing so may result in damage to the ECM's transistor. Use a ground other than ECM terminals, such as the ground.

On Board Diagnosis Logic

ABS006MH

DTC No.	Trouble diagnosis name	DTC detecting condition	Possible cause
P0112 0112	Intake air temperature sensor circuit low input	An excessively low voltage from the sensor is sent to ECM.	● Harness or connectors (The sensor circuit is open or shorted.) ● Intake air temperature sensor
P0113 0113	Intake air temperature sensor circuit high input	An excessively high voltage from the sensor is sent to ECM.	

DTC Confirmation Procedure

ABS006MI

NOTE:
If DTC Confirmation Procedure has been previously conducted, always turn ignition switch OFF and wait at least 10 seconds before conducting the next test.

WITH CONSULT-II

1. Turn ignition switch ON.
2. Select “DATA MONITOR” mode with CONSULT-II.
3. Wait at least 5 seconds.
4. If 1st trip DTC is detected, go to EC-206, "Diagnostic Procedure"
.

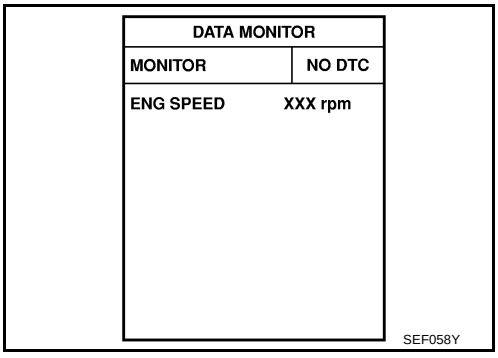

WITH GST

Follow the procedure “WITH CONSULT-II” above.

Wiring Diagram

ABS006MJ

EC-IATS-01

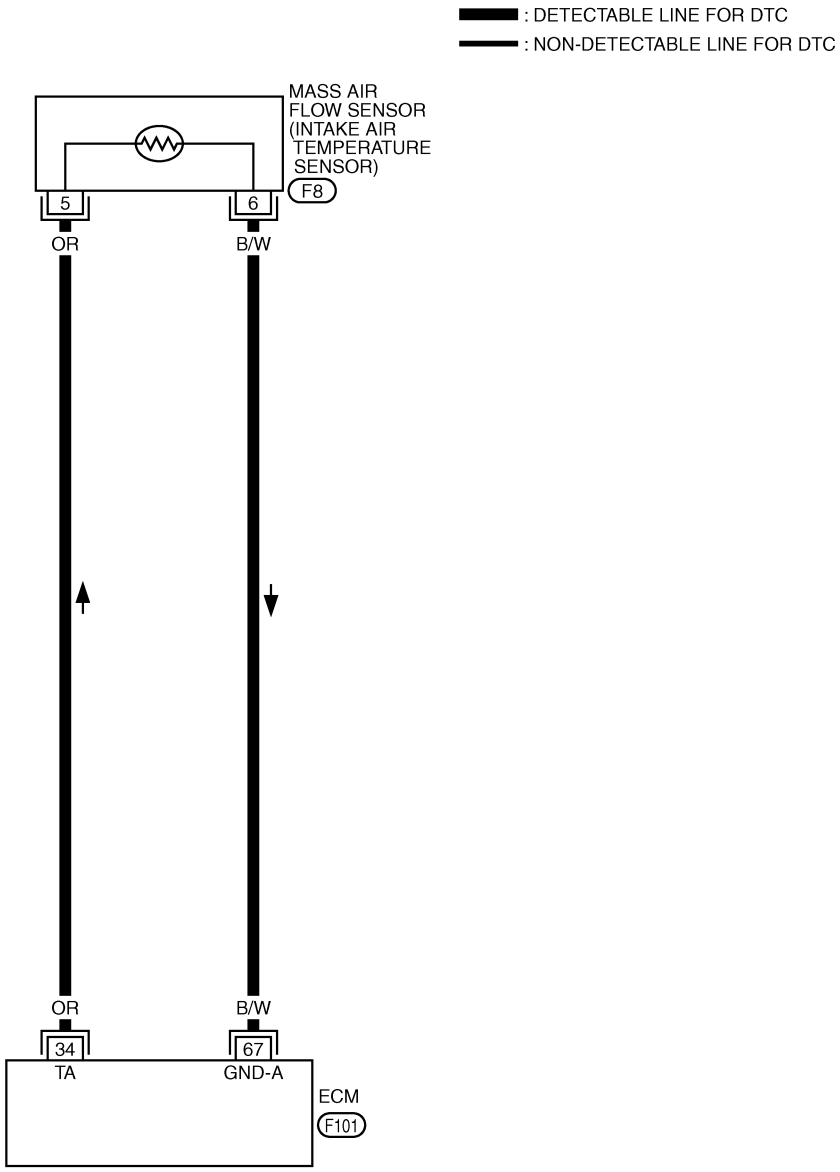

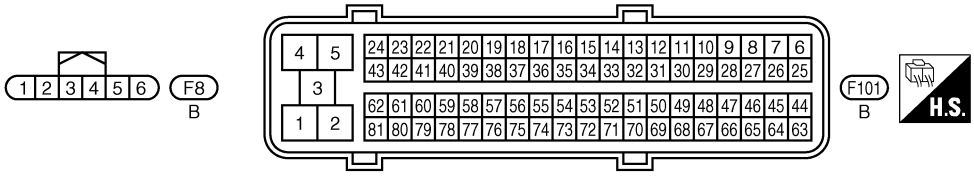

TBWM0288E

Diagnostic Procedure

ABS006MK

1. CHECK GROUND CONNECTIONS

1. Turn ignition switch OFF.
2. Loosen and retighten ground three screws on the body. Refer to EC-170, "Ground Inspection" .

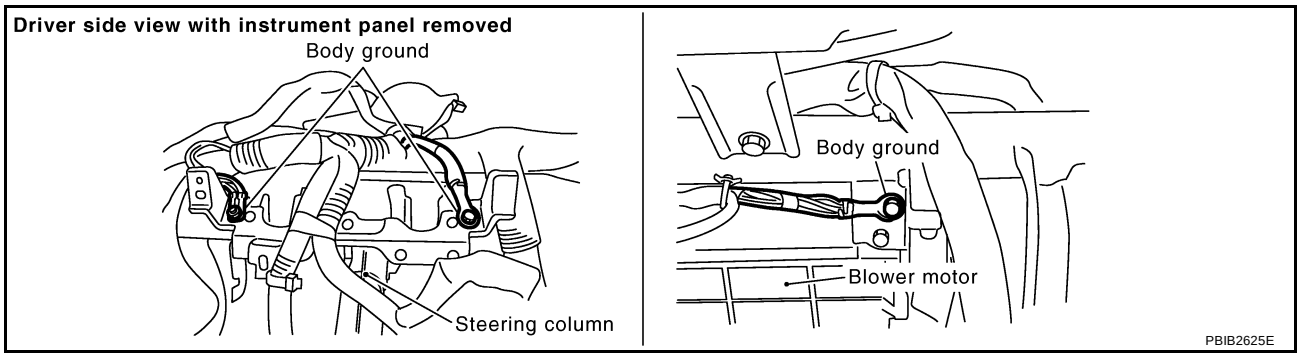

OK or NG

OK >> GO TO 2.
NG >> Repair or replace ground connections.

2. CHECK INTAKE AIR TEMPERATURE SENSOR POWER SUPPLY CIRCUIT

1. Disconnect mass air flow sensor (intake air temperature sensor is built-into) harness connector.
2. Turn ignition switch ON.

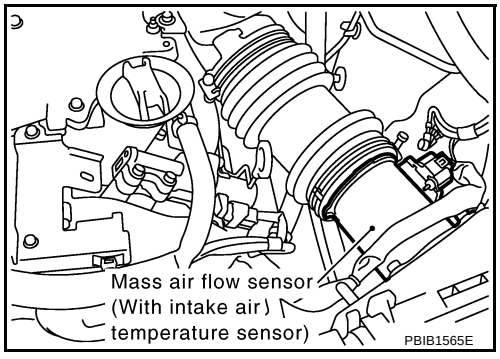

3. Check voltage between mass air flow sensor terminal 5 and ground.

Voltage: Approximately 5V

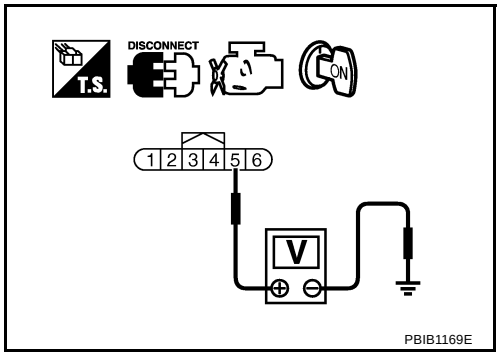

OK or NG

OK >> GO TO 3.
NG >> Repair harness or connectors.

3. CHECK INTAKE AIR TEMPERATURE SENSOR GROUND CIRCUIT FOR OPEN AND SHORT

1. Turn ignition switch OFF.
2. Disconnect ECM harness connector.
3. Check harness continuity between mass air flow sensor terminal 6 and ECM terminal 67. Refer to Wiring Diagram.

Continuity should exist.

4. Also check harness for short to ground and short to power.

OK or NG

OK >> GO TO 4.
NG >> Repair open circuit or short to ground or short to power in harness or connectors.

4. CHECK INTAKE AIR TEMPERATURE SENSOR

Refer to EC-207, "Component Inspection" .

OK or NG

OK >> GO TO 5.
NG >> Replace mass air flow sensor (with intake air temperature sensor).

5. CHECK INTERMITTENT INCIDENT

Refer to EC-163, "TROUBLE DIAGNOSIS FOR INTERMITTENT INCIDENT" .

>> **INSPECTION END**

Component Inspection

ABS006ML

INTAKE AIR TEMPERATURE SENSOR

1. Check resistance between mass air flow sensor terminals 5 and 6 under the following conditions.

Intake air temperature °C (°F)	Resistance kΩ
25 (77)	1.94 - 2.06

2. If NG, replace mass air flow sensor (with intake air temperature sensor).

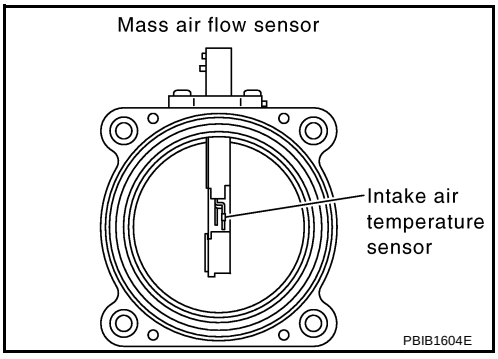

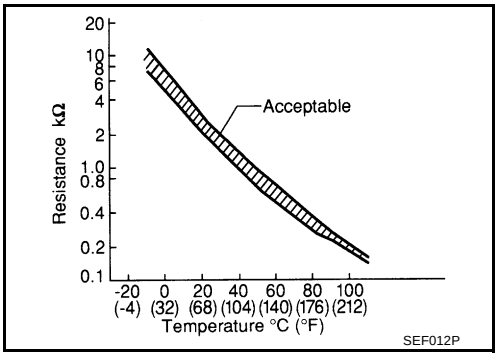

Removal and Installation

ABS006MM

MASS AIR FLOW SENSOR

Refer to EM-17, "AIR CLEANER AND AIR DUCT" .

DTC P0117, P0118 ECT SENSOR

PFP:22630

Component Description

ABS006MN

The engine coolant temperature sensor is used to detect the engine coolant temperature. The sensor modifies a voltage signal from the ECM. The modified signal returns to the ECM as the engine coolant temperature input. The sensor uses a thermistor which is sensitive to the change in temperature. The electrical resistance of the thermistor decreases as temperature increases.

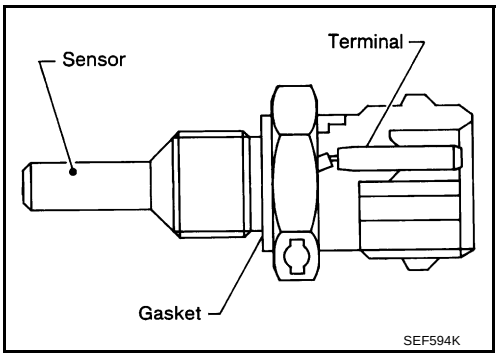

<Reference data>

Engine coolant temperature °C (°F)	Voltage* V	Resistance kΩ
-10 (14)	4.4	7.0 - 11.4
20 (68)	3.5	2.1 - 2.9
50 (122)	2.2	0.68 - 1.00
90 (194)	0.9	0.236 - 0.260

*: This data is reference value and is measured between ECM terminal 73 (Engine coolant temperature sensor) and ground.

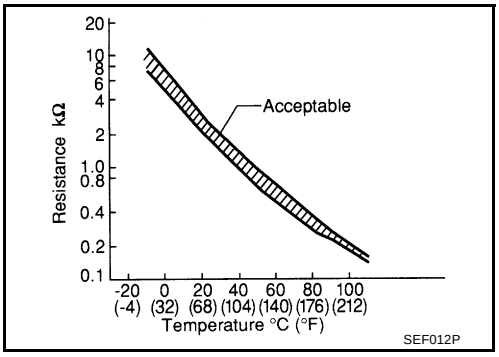

CAUTION:

Do not use ECM ground terminals when measuring input/output voltage. Doing so may result in damage to the ECM's transistor. Use a ground other than ECM terminals, such as the ground.

On Board Diagnosis Logic

ABS006MO

These self-diagnoses have the one trip detection logic.

DTC No.	Trouble Diagnosis Name	DTC Detecting Condition	Possible Cause
P0117 0117	Engine coolant temperature sensor circuit low input	An excessively low voltage from the sensor is sent to ECM.	● Harness or connectors (The sensor circuit is open or shorted.) ● Engine coolant temperature sensor
P0118 0118	Engine coolant temperature sensor circuit high input	An excessively high voltage from the sensor is sent to ECM.	

FAIL-SAFE MODE

When the malfunction is detected, the ECM enters fail-safe mode and the MIL lights up.

Detected items	Engine operating condition in fail-safe mode	
Engine coolant temperature sensor circuit	Engine coolant temperature will be determined by ECM based on the time after turning ignition switch ON or START. CONSULT-II displays the engine coolant temperature decided by ECM.	
	Condition	Engine coolant temperature decided (CONSULT-II display)
	Just as ignition switch is turned ON or START	40°C (104°F)
	More than approx. 4 minutes after ignition ON or START	80°C (176°F)
	Except as shown above	40 - 80°C (104 - 176°F) (Depends on the time)
	When the fail-safe system for engine coolant temperature sensor is activated, the cooling fan operates while engine is running.	

DTC Confirmation Procedure

ABS006MP

NOTE:
If DTC Confirmation Procedure has been previously conducted, always turn ignition switch OFF and wait at least 10 seconds before conducting the next test.

WITH CONSULT-II

1. Turn ignition switch ON.
2. Select “DATA MONITOR” mode with CONSULT-II.
3. Wait at least 5 seconds.
4. If DTC is detected, go to EC-211, "Diagnostic Procedure" .

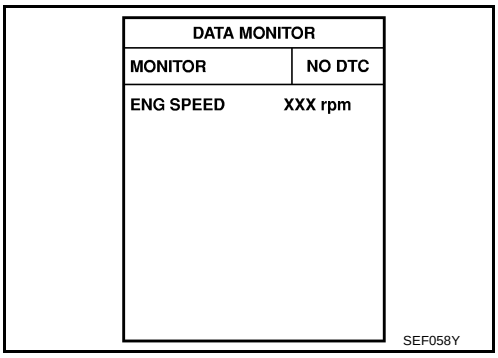

WITH GST

Follow the procedure “WITH CONSULT-II” above.

Wiring Diagram

ABS006MQ

EC-ECTS-01

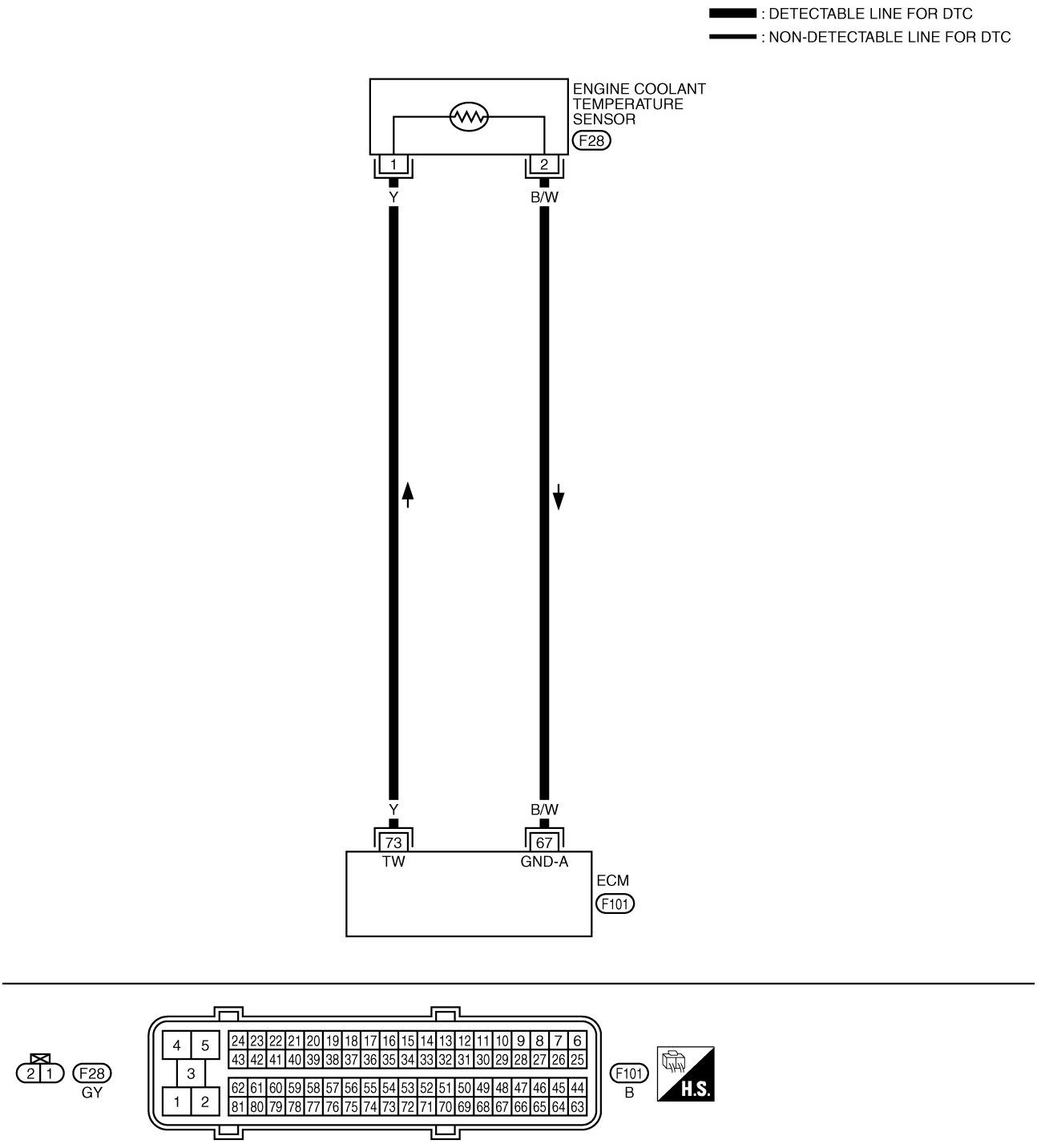

Diagnostic Procedure

ABS006MR

1. CHECK GROUND CONNECTIONS

1. Turn ignition switch OFF.
2. Loosen and retighten ground three screws on the body. Refer to EC-170, "Ground Inspection" .

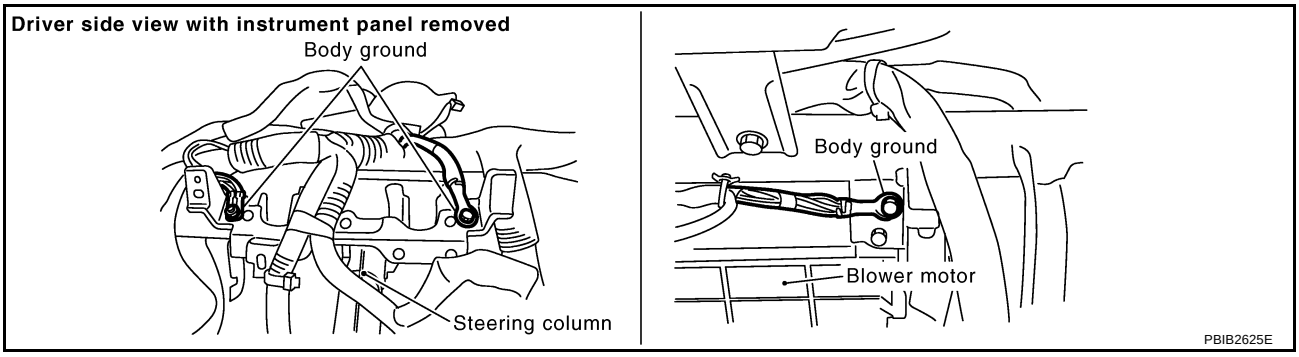

OK or NG

OK >> GO TO 2.
NG >> Repair or replace ground connections.

2. CHECK ECT SENSOR POWER SUPPLY CIRCUIT

1. Disconnect engine coolant temperature (ECT) sensor harness connector.
2. Turn ignition switch ON.

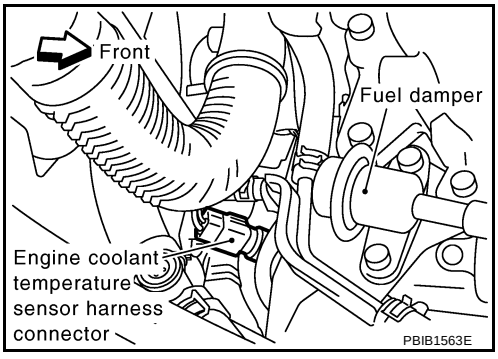

3. Check voltage between ECT sensor terminal 1 and ground with CONSULT-II or tester.

Voltage: Approximately 5V

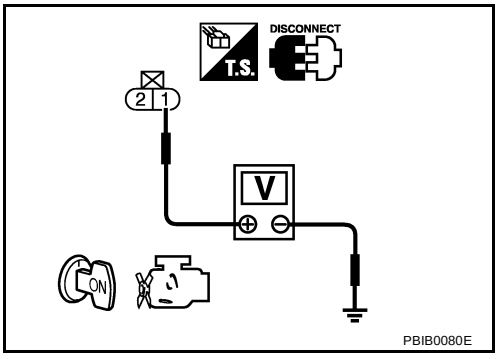

OK or NG

OK >> GO TO 3.
NG >> Repair open circuit or short to ground or short to power in harness or connectors.

3. CHECK ECT SENSOR GROUND CIRCUIT FOR OPEN AND SHORT

1. Turn ignition switch OFF.
2. Disconnect ECM harness connector.
3. Check harness continuity between ECT sensor terminal 2 and ECM terminal 67.
   Refer to Wiring Diagram.

   Continuity should exist.

4. Also check harness for short to ground and short to power.

OK or NG

OK >> GO TO 4.
NG >> Repair open circuit or short to ground or short to power in harness or connectors.

4. CHECK ENGINE COOLANT TEMPERATURE SENSOR

Refer to EC-212, "Component Inspection" .

OK or NG

OK >> GO TO 5.
NG >> Replace engine coolant temperature sensor.

5. CHECK INTERMITTENT INCIDENT

Refer to EC-163, "TROUBLE DIAGNOSIS FOR INTERMITTENT INCIDENT" .

>> **INSPECTION END**

Component Inspection

ABS006MS

ENGINE COOLANT TEMPERATURE SENSOR

1. Check resistance between engine coolant temperature sensor terminals 1 and 2 as shown in the figure.

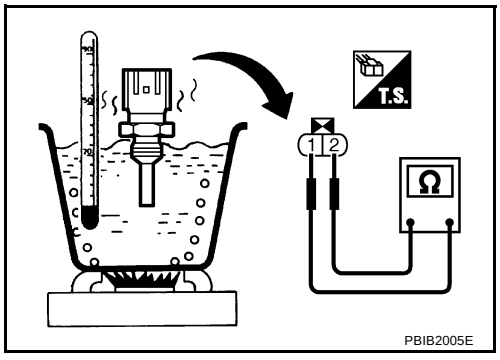

<Reference data>

Engine coolant temperature °C (°F)	Resistance kΩ
20 (68)	2.1 - 2.9
50 (122)	0.68 - 1.00
90 (194)	0.236 - 0.260

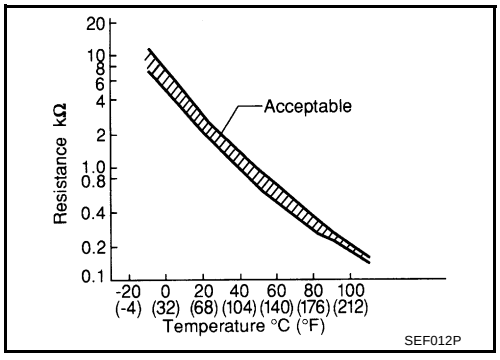

2. If NG, replace engine coolant temperature sensor.

Removal and Installation

ABS006MT

ENGINE COOLANT TEMPERATURE SENSOR

Refer to CO-26, "WATER INLET AND THERMOSTAT ASSEMBLY" .

DTC P0122, P0123 TP SENSOR

PFP:16119

Component Description

ABS006N2

Electric throttle control actuator consists of throttle control motor, throttle position sensor, etc. The throttle position sensor responds to the throttle valve movement.
The throttle position sensor has two sensors. These sensors are a kind of potentiometers which transform the throttle valve position into output voltage, and emit the voltage signal to the ECM. In addition, these sensors detect the opening and closing speed of the throttle valve and feed the voltage signals to the ECM. The ECM judges the current opening angle of the throttle valve from these signals and the ECM controls the throttle control motor to make the throttle valve opening angle properly in response to driving condition.

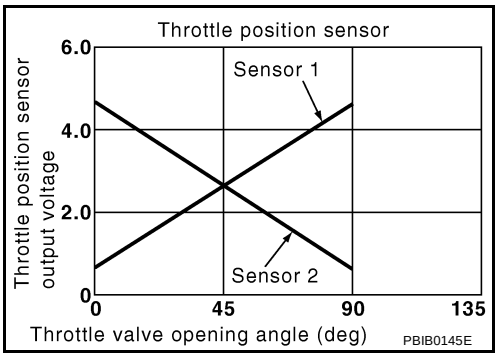

CONSULT-II Reference Value in Data Monitor Mode

ABS006N3

Specification data are reference values.

MONITOR ITEM	CONDITION		SPECIFICATION
THRTL SEN 1 THRTL SEN 2*	● Ignition switch: ON (Engine stopped) ● Selector lever: D	Accelerator pedal: Fully released	More than 0.36V
		Accelerator pedal: Fully depressed	Less than 4.75V

*: Throttle position sensor 2 signal is converted by ECM internally. Thus, it differs from ECM terminal voltage signal.

On Board Diagnosis Logic

ABS006N4

These self-diagnoses have the one trip detection logic.

DTC No.	Trouble diagnosis name	DTC detecting condition	Possible cause
P0122 0122	Throttle position sensor 2 circuit low input	An excessively low voltage from the TP sensor 2 is sent to ECM.	● Harness or connectors (The TP sensor 2 circuit is open or shorted.) (APP sensor 2 circuit is shorted.) ● Electric throttle control actuator (TP sensor 2) ● Accelerator pedal position sensor
P0123 0123	Throttle position sensor 2 circuit high input	An excessively high voltage from the TP sensor 2 is sent to ECM.	

FAIL-SAFE MODE

When the malfunction is detected, ECM enters fail-safe mode and the MIL lights up.

Engine operation condition in fail-safe mode
The ECM controls the electric throttle control actuator in regulating the throttle opening in order for the idle position to be within +10 degrees. The ECM regulates the opening speed of the throttle valve to be slower than the normal condition. So, the acceleration will be poor.

DTC Confirmation Procedure

ABS006N5

NOTE:
If DTC Confirmation Procedure has been previously conducted, always turn ignition switch OFF and wait at least 10 seconds before conducting the next test.
TESTING CONDITION:
Before performing the following procedure, confirm that battery voltage is more than 10V at idle.

WITH CONSULT-II

1. Turn ignition switch ON.
2. Select “DATA MONITOR” mode with CONSULT-II.
3. Start engine and let it idle for 1 second.
4. If DTC is detected, go to EC-216, "Diagnostic Procedure" .

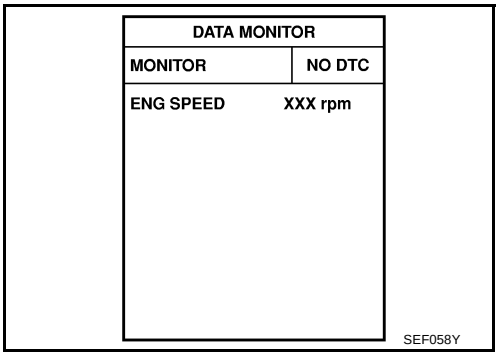

WITH GST

Follow the procedure “WITH CONSULT-II” above.

Wiring Diagram

ABS006N6

EC-TPS2-01

: DETECTABLE LINE FOR DTC
: NON-DETECTABLE LINE FOR DTC

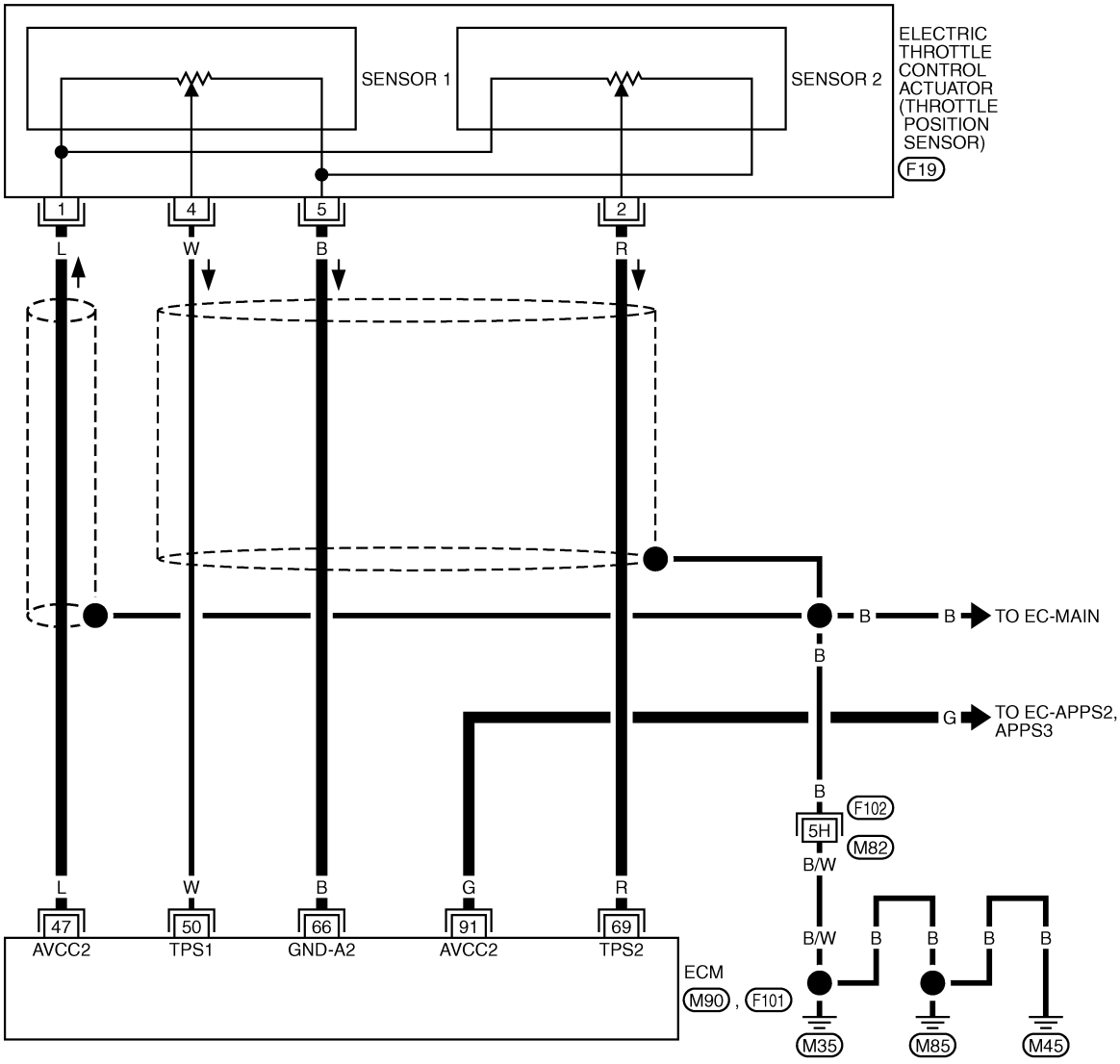

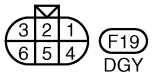

REFER TO THE FOLLOWING.
F102 -SUPER MULTIPLE JUNCTION (SMJ)

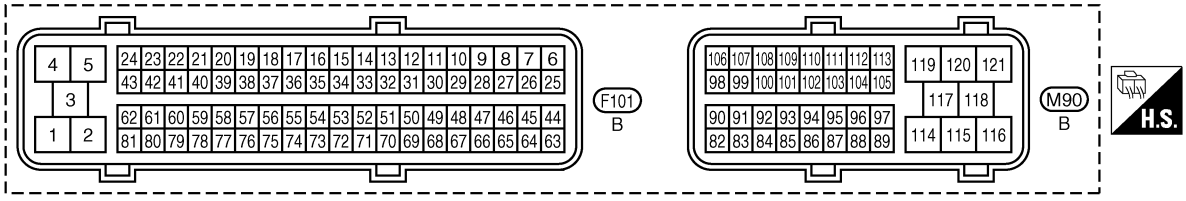

TBWM0393E

Specification data are reference values and are measured between each terminal and ground.

CAUTION:

Do not use ECM ground terminals when measuring input/output voltage. Doing so may result in damage to the ECM's transistor. Use a ground other than ECM terminals, such as the ground.

TERMINAL NO.	WIRE COLOR	ITEM	CONDITION	DATA (DC Voltage)
47	L	Sensor power supply (Throttle position sensor)	**[Ignition switch: ON]**	Approximately 5V
50	W	Throttle position sensor 1	**[Ignition switch: ON]** ● Engine stopped ● Selector lever: D ● Accelerator pedal: Fully released	More than 0.36V
			[Ignition switch: ON] ● Engine stopped ● Selector lever: D ● Accelerator pedal: Fully depressed	Less than 4.75V
66	B	Sensor ground (Throttle position sensor)	**[Engine is running]** ● **Warm-up condition** ● Idle speed	Approximately 0V
69	R	Throttle position sensor 2	**[Ignition switch: ON]** ● Engine stopped ● Selector lever: D ● Accelerator pedal: Fully released	Less than 4.75V
			[Ignition switch: ON] ● Engine stopped ● Selector lever: D ● Accelerator pedal: Fully depressed	More than 0.36V
91	G	Sensor power supply (APP sensor 2)	**[Ignition switch: ON]**	Approximately 5V

Diagnostic Procedure

ABS006N7

1. CHECK GROUND CONNECTIONS

1. Turn ignition switch OFF.
2. Loosen and retighten ground three screws on the body. Refer to EC-170, "Ground Inspection" .

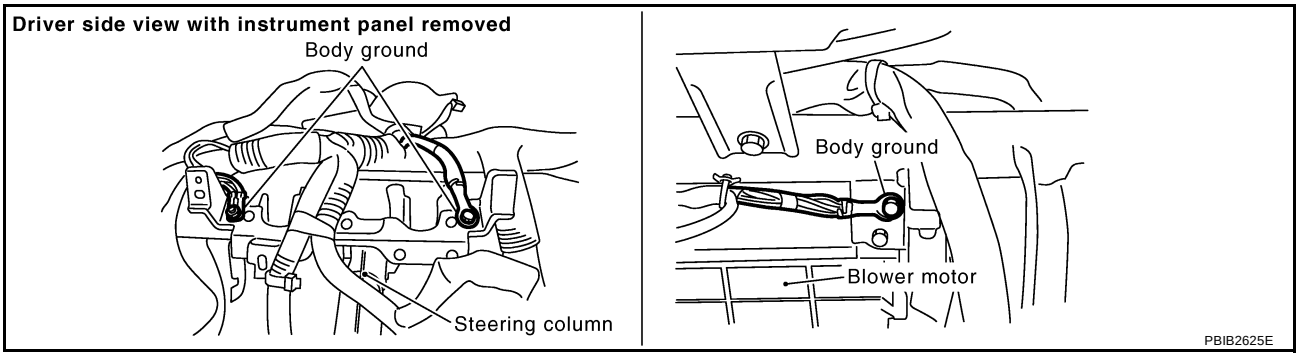

OK or NG

OK >> GO TO 2.
NG >> Repair or replace ground connections.

2. CHECK THROTTLE POSITION SENSOR 2 POWER SUPPLY CIRCUIT-I

1. Disconnect electric throttle control actuator harness connector.
2. Turn ignition switch ON.

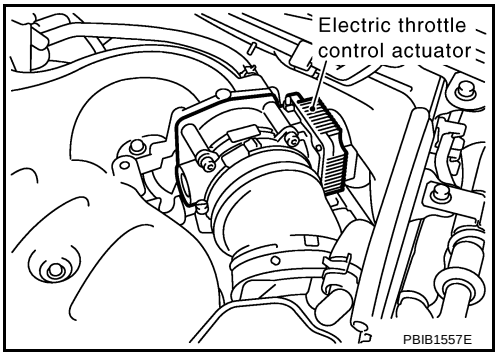

3. Check voltage between electric throttle control actuator terminal 1 and ground with CONSULT-II or tester.

Voltage: Approximately 5V

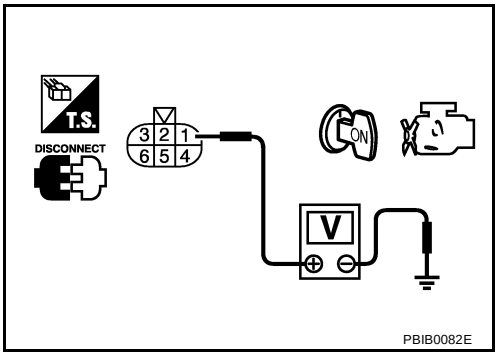

OK or NG

OK >> GO TO 7.
NG >> GO TO 3.

3. CHECK THROTTLE POSITION SENSOR 2 POWER SUPPLY CIRCUIT-II

1. Turn ignition switch OFF.
2. Disconnect ECM harness connector.
3. Check harness continuity between electric throttle control actuator terminal 1 and ECM terminal 47. Refer to Wiring Diagram.

Continuity should exist.

OK or NG

OK >> GO TO 4.
NG >> Repair or replace open circuit.

4. CHECK THROTTLE POSITION SENSOR 2 POWER SUPPLY CIRCUIT-III

Check the following.

- Harness for short to power and short to ground, between the following terminals.

ECM terminal	Sensor terminal	Reference Wiring Diagram
47	Electric throttle control actuator terminal 1	EC-215
91	APP sensor terminal 4	EC-626

OK or NG

OK >> GO TO 5.
NG >> Repair short to ground or short to power in harness or connectors.

5. CHECK APP SENSOR

Refer to EC-624, "Component Inspection" .

OK or NG

OK >> GO TO 11.
NG >> GO TO 6.

6. REPLACE ACCELERATOR PEDAL ASSEMBLY

1. Replace accelerator pedal assembly.
2. Perform EC-96, "Accelerator Pedal Released Position Learning" .
3. Perform EC-96, "Throttle Valve Closed Position Learning" .
4. Perform EC-97, "Idle Air Volume Learning" .

>> **INSPECTION END**

7. CHECK THROTTLE POSITION SENSOR 2 GROUND CIRCUIT FOR OPEN AND SHORT

1. Turn ignition switch OFF.
2. Disconnect ECM harness connector.
3. Check harness continuity between electric throttle control actuator terminal 5 and ECM terminal 66. Refer to Wiring Diagram.

Continuity should exist.

4. Also check harness for short to ground and short to power.

OK or NG

OK >> GO TO 8.
NG >> Repair open circuit or short to ground or short to power in harness or connectors.

8. CHECK THROTTLE POSITION SENSOR 2 INPUT SIGNAL CIRCUIT FOR OPEN AND SHORT

1. Check harness continuity between ECM terminal 69 and electric throttle control actuator terminal 2. Refer to Wiring Diagram.

Continuity should exist.

2. Also check harness for short to ground and short to power.

OK or NG

OK >> GO TO 9.
NG >> Repair open circuit or short to ground or short to power in harness or connectors.

9. CHECK THROTTLE POSITION SENSOR

Refer to EC-219, "Component Inspection" .

OK or NG

OK >> GO TO 11.
NG >> GO TO 10.

10. REPLACE ELECTRIC THROTTLE CONTROL ACTUATOR

1. Replace the electric throttle control actuator.
2. Perform EC-96, "Throttle Valve Closed Position Learning" .
3. Perform EC-97, "Idle Air Volume Learning" .

>> **INSPECTION END**

11. CHECK INTERMITTENT INCIDENT

Refer to EC-163, "TROUBLE DIAGNOSIS FOR INTERMITTENT INCIDENT" .

>> **INSPECTION END**

Component Inspection

ABS006N8

THROTTLE POSITION SENSOR

1. Reconnect all harness connectors disconnected.
2. Perform EC-96, "Throttle Valve Closed Position Learning" .
3. Turn ignition switch ON.
4. Set selector lever to D position.
5. Check voltage between ECM terminals 50 (TP sensor 1signal), 69 (TP sensor 2signal) and body ground under the following conditions.

Terminal	Accelerator pedal	Voltage
50 (Throttle position sensor 1)	Fully released	More than 0.36V
	Fully depressed	Less than 4.75V
69 (Throttle position sensor 2)	Fully released	Less than 4.75V
	Fully depressed	More than 0.36V

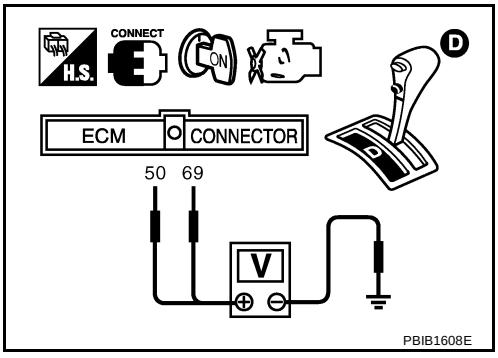

6. If NG, replace electric throttle control actuator and go to the next step.
7. Perform EC-96, "Throttle Valve Closed Position Learning" .
8. Perform EC-97, "Idle Air Volume Learning" .

Removal and Installation

ABS006N9

ELECTRIC THROTTLE CONTROL ACTUATOR

Refer to EM-19, "INTAKE MANIFOLD COLLECTOR" .

DTC P0125 ECT SENSOR

PFP:22630

Component Description

ABS006NA

NOTE:
If DTC P0125 is displayed with P0117 or P0118, first perform the trouble diagnosis for DTC P0117 or P0118. Refer to EC-208 .

The engine coolant temperature sensor is used to detect the engine coolant temperature. The sensor modifies a voltage signal from the ECM. The modified signal returns to the ECM as the engine coolant temperature input. The sensor uses a thermistor which is sensitive to the change in temperature. The electrical resistance of the thermistor decreases as temperature increases.

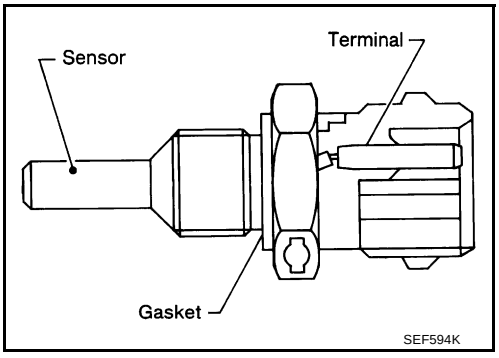

<Reference data>

Engine coolant temperature °C (°F)	Voltage* V	Resistance kΩ
20 (68)	3.5	2.1 - 2.9
50 (122)	2.2	0.68 - 1.00
90 (194)	0.9	0.236 - 0.260

*: This data is reference value and is measured between ECM terminal 73 (Engine coolant temperature sensor) and ground.

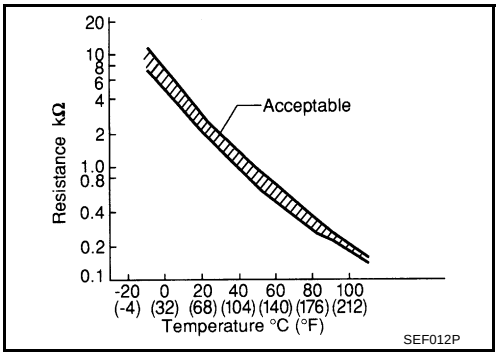

CAUTION:
Do not use ECM ground terminals when measuring input/output voltage. Doing so may result in damage to the ECM's transistor. Use a ground other than ECM terminals, such as the ground.

On Board Diagnosis Logic

ABS006NB

This self-diagnosis has the one trip detection logic.

DTC No.	Trouble diagnosis name	DTC detecting condition	Possible cause
P0125 0125	Insufficient engine coolant temperature for closed loop fuel control	● Voltage sent to ECM from the sensor is not practical, even when some time has passed after starting the engine. ● Engine coolant temperature is insufficient for closed loop fuel control.	● Harness or connectors (High resistance in the circuit) ● Engine coolant temperature sensor ● Thermostat

DTC Confirmation Procedure

ABS006NC

CAUTION:
Be careful not to overheat engine.

NOTE:
If DTC Confirmation Procedure has been previously conducted, always turn ignition switch OFF and wait at least 10 seconds before conducting the next test.

WITH CONSULT-II

1. Turn ignition switch ON.
2. Select “DATA MONITOR” mode with CONSULT-II.
3. Check that “COOLAN TEMP/S” is above 10°C (50°F).
   If it is above 10°C (50°F), the test result will be OK.
   If it is below 10°C (50°F), go to following step.
4. Start engine and run it for 65 minutes at idle speed.
   If “COOLAN TEMP/S” increases to more than 10°C (50°F) within 65 minutes, stop engine because the test result will be OK.
5. If DTC is detected, go to EC-221, "Diagnostic Procedure" .

DATA MONITOR	
MONITOR	NO DTC
ENG SPEED	XXX rpm
COOLAN TEMP/S	XXX °C

SEF174Y

WITH GST

Follow the procedure “WITH CONSULT-II” above.

Diagnostic Procedure

ABS006ND

1. CHECK GROUND CONNECTIONS

1. Turn ignition switch OFF.
2. Loosen and retighten ground three screws on the body. Refer to EC-170, "Ground Inspection" .

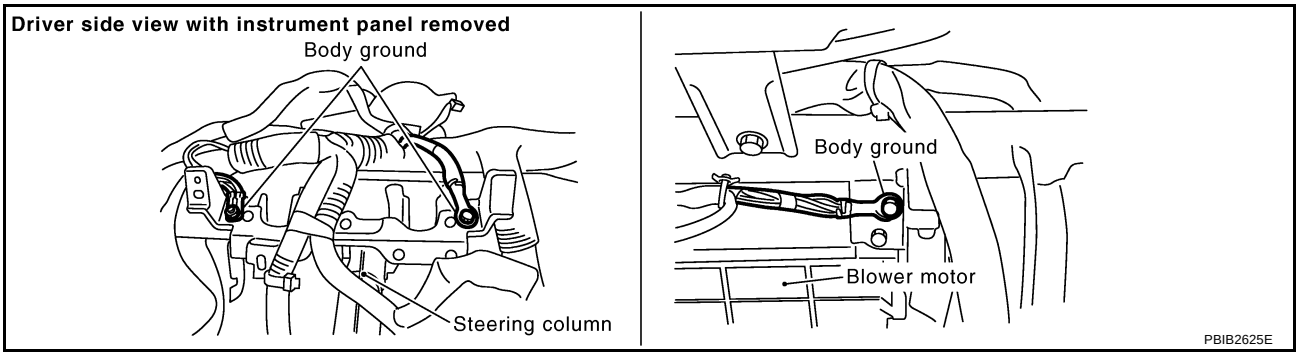

OK or NG

OK >> GO TO 2.
NG >> Repair or replace ground connections.

2. CHECK ENGINE COOLANT TEMPERATURE SENSOR

Refer to EC-222, "Component Inspection" .

OK or NG

OK >> GO TO 3.
NG >> Replace engine coolant temperature sensor.

3. CHECK THERMOSTAT OPERATION

When the engine is cold [lower than 70°C (158°F)] condition, grasp lower radiator hose and confirm the engine coolant does not flow.

OK or NG

OK >> GO TO 4.
NG >> Repair or replace thermostat. Refer to CO-26, "WATER INLET AND THERMOSTAT ASSEMBLY" .

4. CHECK INTERMITTENT INCIDENT

Refer to EC-163, "TROUBLE DIAGNOSIS FOR INTERMITTENT INCIDENT" .
Refer to EC-210, "Wiring Diagram" .

>> **INSPECTION END**

Component Inspection

ABS006NE

ENGINE COOLANT TEMPERATURE SENSOR

1. Check resistance between engine coolant temperature sensor terminals 1 and 2 as shown in the figure.

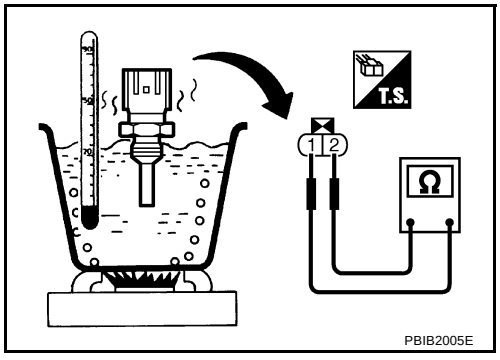

<Reference data>

Engine coolant temperature °C (°F)	Resistance kΩ
20 (68)	2.1 - 2.9
50 (122)	0.68 - 1.00
90 (194)	0.236 - 0.260

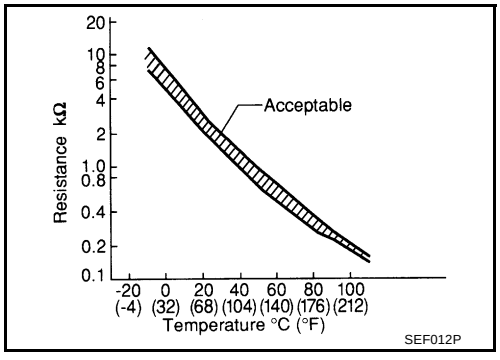

2. If NG, replace engine coolant temperature sensor.

Removal and Installation

ABS006NF

ENGINE COOLANT TEMPERATURE SENSOR

Refer to CO-26, "WATER INLET AND THERMOSTAT ASSEMBLY" .

DTC P0127 IAT SENSOR

PFP:22630

Component Description

ABS006NG

The intake air temperature sensor is built into mass air flow sensor. The sensor detects intake air temperature and transmits a signal to the ECM.
The temperature sensing unit uses a thermistor which is sensitive to the change in temperature. Electrical resistance of the thermistor decreases in response to the temperature rise.

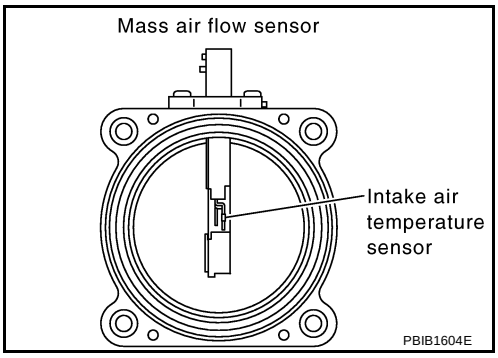

<Reference data>

Intake air temperature °C (°F)	Voltage* V	Resistance kΩ
25 (77)	3.32	1.94 - 2.06
80 (176)	1.23	0.295 - 0.349

*: This data is reference value and is measured between ECM terminal 34 (Intake air temperature sensor) and ground.

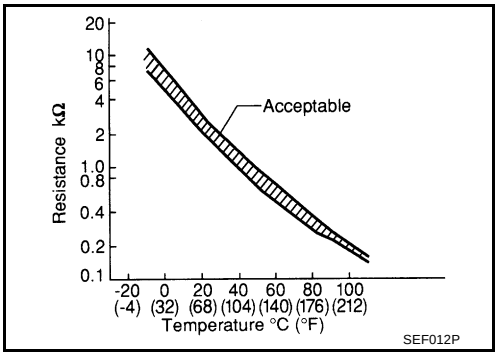

CAUTION:
Do not use ECM ground terminals when measuring input/output voltage. Doing so may result in damage to the ECM's transistor. Use a ground other than ECM terminals, such as the ground.

On Board Diagnosis Logic

ABS006NH

DTC No.	Trouble diagnosis name	DTC detecting condition	Possible cause
P0127 0127	Intake air temperature too high	Rationally incorrect voltage from the sensor is sent to ECM, compared with the voltage signal from engine coolant temperature sensor.	● Harness or connectors (The sensor circuit is open or shorted) ● Intake air temperature sensor

DTC Confirmation Procedure

ABS006NI

NOTE:
If DTC Confirmation Procedure has been previously conducted, always turn ignition switch OFF and wait at least 10 seconds before conducting the next test.

CAUTION:
Always drive vehicle at a safe speed.
TESTING CONDITION:
This test may be conducted with the drive wheels lifted in the shop or by driving the vehicle. If a road test is expected to be easier, it is unnecessary to lift the vehicle.

WITH CONSULT-II

1. Wait until engine coolant temperature is less than 90°C (194°F)

a. Turn ignition switch ON.

b. Select “DATA MONITOR” mode with CONSULT-II.
c. Check the engine coolant temperature.
d. If the engine coolant temperature is not less than 90°C (194°F), turn ignition switch OFF and cool down engine.
   - Perform the following steps before engine coolant temperature is above 90°C (194°F).
2. Turn ignition switch ON.
3. Select “DATA MONITOR” mode with CONSULT-II.
4. Start engine.
5. Hold vehicle speed at more than 70 km/h (43 MPH) for 100 consecutive seconds.
6. If 1st trip DTC is detected, go to EC-224, "Diagnostic Procedure" .

DATA MONITOR	
MONITOR	NO DTC
ENG SPEED	XXX rpm
COOLAN TEMP/S	XXX °C
VHCL SPEED SE	XXX km/h
B/FUEL SCHDL	XXX msec

SEF189Y

WITH GST

Follow the procedure “WITH CONSULT-II” above.

Diagnostic Procedure

ABS006NJ

1. CHECK GROUND CONNECTIONS

1. Turn ignition switch OFF.
2. Loosen and retighten ground three screws on the body. Refer to EC-170, "Ground Inspection" .

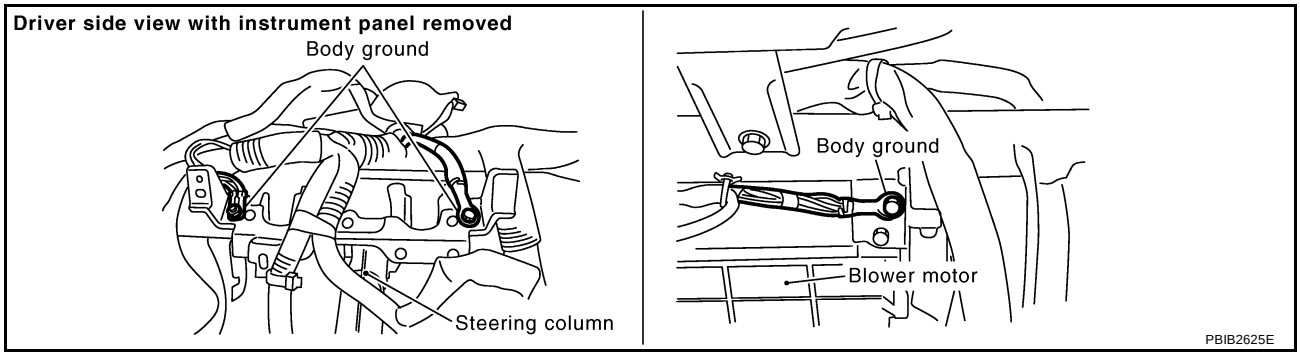

OK or NG

OK >> GO TO 2.
NG >> Repair or replace ground connections.

2. CHECK INTAKE AIR TEMPERATURE SENSOR

Refer to EC-225, "Component Inspection" .

OK or NG

OK >> GO TO 3.
NG >> Replace mass air flow sensor (with intake air temperature sensor).

3. CHECK INTERMITTENT INCIDENT

Refer to EC-163, "TROUBLE DIAGNOSIS FOR INTERMITTENT INCIDENT" .
Refer to EC-205, "Wiring Diagram" .

>> **INSPECTION END**

Component Inspection

ABS006NK

INTAKE AIR TEMPERATURE SENSOR

1. Check resistance between intake air temperature sensor terminals 5 and 6 under the following conditions.

Intake air temperature °C (°F)	Resistance kΩ
25 (77)	1.94 - 2.06

2. If NG, replace mass air flow sensor (with intake air temperature sensor).

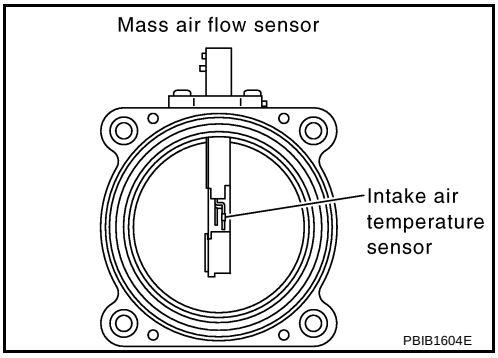

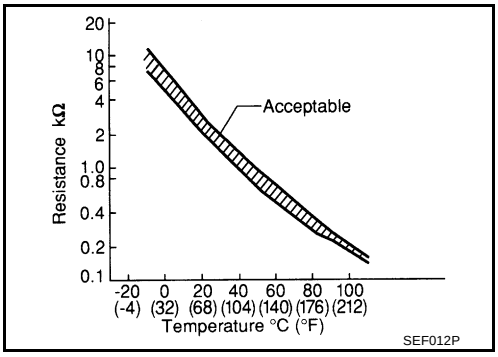

Removal and Installation

ABS006NL

MASS AIR FLOW SENSOR

Refer to EM-17, "AIR CLEANER AND AIR DUCT" .

DTC P0128 THERMOSTAT FUNCTION

PFP:21200

On Board Diagnosis Logic

ABS006NM

Engine coolant temperature has not risen enough to open the thermostat even though the engine has run long enough.
This is due to a leak in the seal or the thermostat stuck open.

DTC No.	Trouble diagnosis name	DTC detecting condition	Possible cause
P0128 0128	Thermostat function	The engine coolant temperature does not reach to specified temperature even though the engine has run long enough.	● Thermostat ● Leakage from sealing portion of thermostat ● Engine coolant temperature sensor

DTC Confirmation Procedure

ABS006NN

NOTE:
If DTC Confirmation Procedure has been previously conducted, always turn ignition switch OFF and wait at least 10 seconds before conducting the next test.
TESTING CONDITION:

- **For best results, perform at ambient temperature of –10°C (14°F) or higher.**
- **For best results, perform at engine coolant temperature of –10°C (14°F) to 60°C (140°F).**

WITH CONSULT-II

1. Replace thermostat with new one. Refer to CO-26, "WATER INLET AND THERMOSTAT ASSEMBLY" . Use only a genuine NISSAN thermostat as a replacement. If an incorrect thermostat is used, the MIL may come on.
2. Turn ignition switch ON.
3. Select “COOLAN TEMP/S” in “DATA MONITOR” mode with CONSULT-II.
4. Check that the “COOLAN TEMP/S” is above 60°C (140°F).
   If it is below 60°C (140°F), go to following step.
   If it is above 60°C (140°F), cool down the engine to less than 60°C (140°F), then retry from step 1.
5. Drive vehicle for 10 consecutive minutes under the following conditions.

VHCL SPEED SE	80 - 120 km/h (50 - 75 MPH)

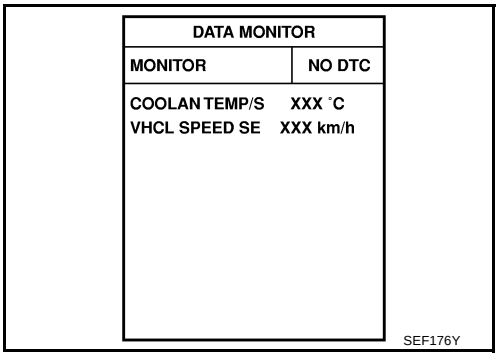

   If 1st trip DTC is detected, go to EC-226, "Diagnostic Procedure" .

WITH GST

1. Follow the procedure “WITH CONSULT-II” above.

Diagnostic Procedure

ABS006NO

1. CHECK ENGINE COOLANT TEMPERATURE SENSOR

Refer to EC-227, "Component Inspection" .

OK or NG

OK >> **INSPECTION END**
NG >> Replace engine coolant temperature sensor.

Component Inspection

ABS006NP

ENGINE COOLANT TEMPERATURE SENSOR

1. Check resistance between engine coolant temperature sensor terminals 1 and 2 as shown in the figure.

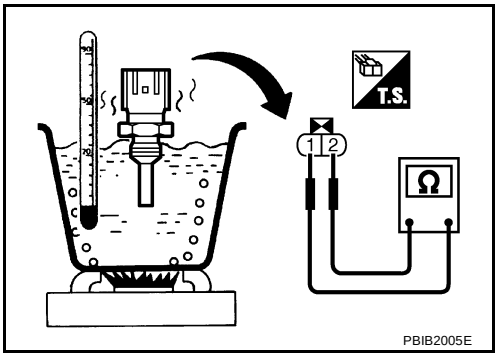

<Reference data>

Engine coolant temperature °C (°F)	Resistance kΩ
20 (68)	2.1 - 2.9
50 (122)	0.68 - 1.00
90 (194)	0.236 - 0.260

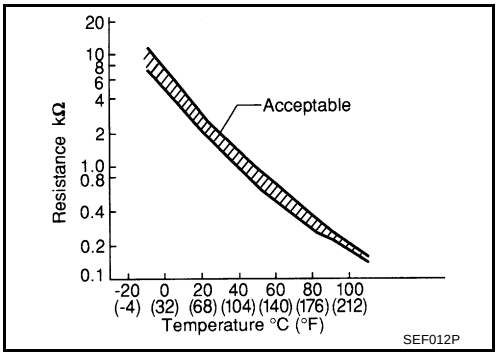

2. If NG, replace engine coolant temperature sensor.

Removal and Installation

ABS006NQ

ENGINE COOLANT TEMPERATURE SENSOR

Refer to CO-26, "WATER INLET AND THERMOSTAT ASSEMBLY" .

DTC P0138, P0158 HO2S2

PFP:226A0

Component Description

ABS006OH

The heated oxygen sensor 2, after three way catalyst 1, monitors the oxygen level in the exhaust gas on each bank.
Even if switching characteristics of the air fuel ratio (A/F) sensor 1 are shifted, the air-fuel ratio is controlled to stoichiometric, by the signal from the heated oxygen sensor 2.
This sensor is made of ceramic zirconia. The zirconia generates voltage from approximately 1V in richer conditions to 0V in leaner conditions.
Under normal conditions the heated oxygen sensor 2 is not used for engine control operation.

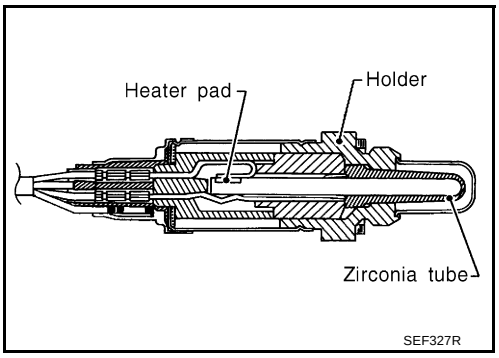

CONSULT-II Reference Value in Data Monitor Mode

ABS006OI

Specification data are reference values.

MONITOR ITEM	CONDITION		SPECIFICATION
HO2S2 (B1) HO2S2 (B2)	● Warm-up condition ● After keeping engine speed between 3,500 and 4,000 rpm for 1 minute and at idle for 1 minute under no load.	Revving engine from idle to 3,000 rpm quickly.	0 - 0.3V ←→ Approx. 0.6 - 1.0V
HO2S2 MNTR (B1) HO2S2 MNTR (B2)			LEAN ←→ RICH

On Board Diagnosis Logic

ABS006OJ

The heated oxygen sensor 2 has a much longer switching time between rich and lean than the air fuel ratio (A/F) sensor 1. The oxygen storage capacity of the three way catalyst 1 causes the longer switching time. To judge the malfunctions of heated oxygen sensor 2, ECM monitors whether the voltage is unusually high during the various driving condition such as fuel-cut.

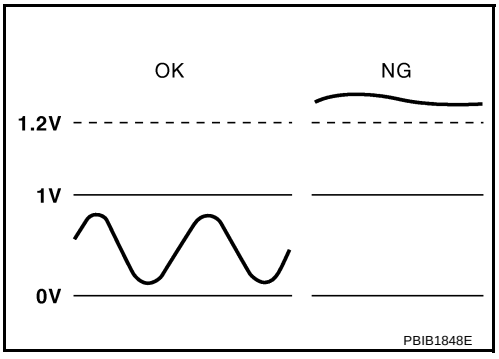

DTC No.	Trouble diagnosis name	DTC detecting condition	Possible cause
P0138 0138 (Bank 1)	Heated oxygen sensor 2 circuit high voltage	An excessively high voltage from the sensor is sent to ECM.	● Harness or connectors (The sensor circuit is open or shorted) ● Heated oxygen sensor 2
P0158 0158 (Bank 2)			

DTC Confirmation Procedure

ABS006OK

NOTE:
If DTC Confirmation Procedure has been previously conducted, always turn ignition switch OFF and wait at least 10 seconds before conducting the next test.

WITH CONSULT-II

1. Turn ignition switch ON and select “DATA MONITOR” mode with CONSULT-II.
2. Start engine and warm it up to the normal operating temperature.
3. Turn ignition switch OFF and wait at least 10 seconds.
4. Start engine and keep the engine speed between 3,500 and 4,000 rpm for at least 1 minute under no load.
5. Let engine idle for 2 minutes.
6. If 1st trip DTC is detected, go to EC-233, "Diagnostic Procedure".

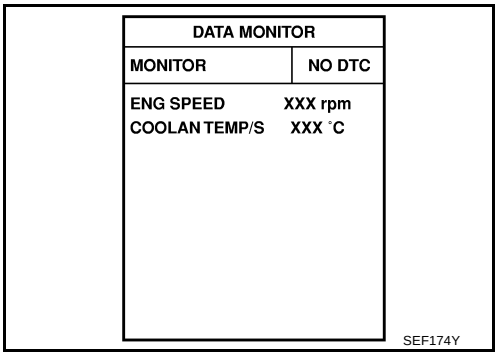

WITH GST

Follow the procedure “WITH CONSULT-II” above.

Wiring Diagram
BANK 1

ABS006OL

EC-O2S2B1-01

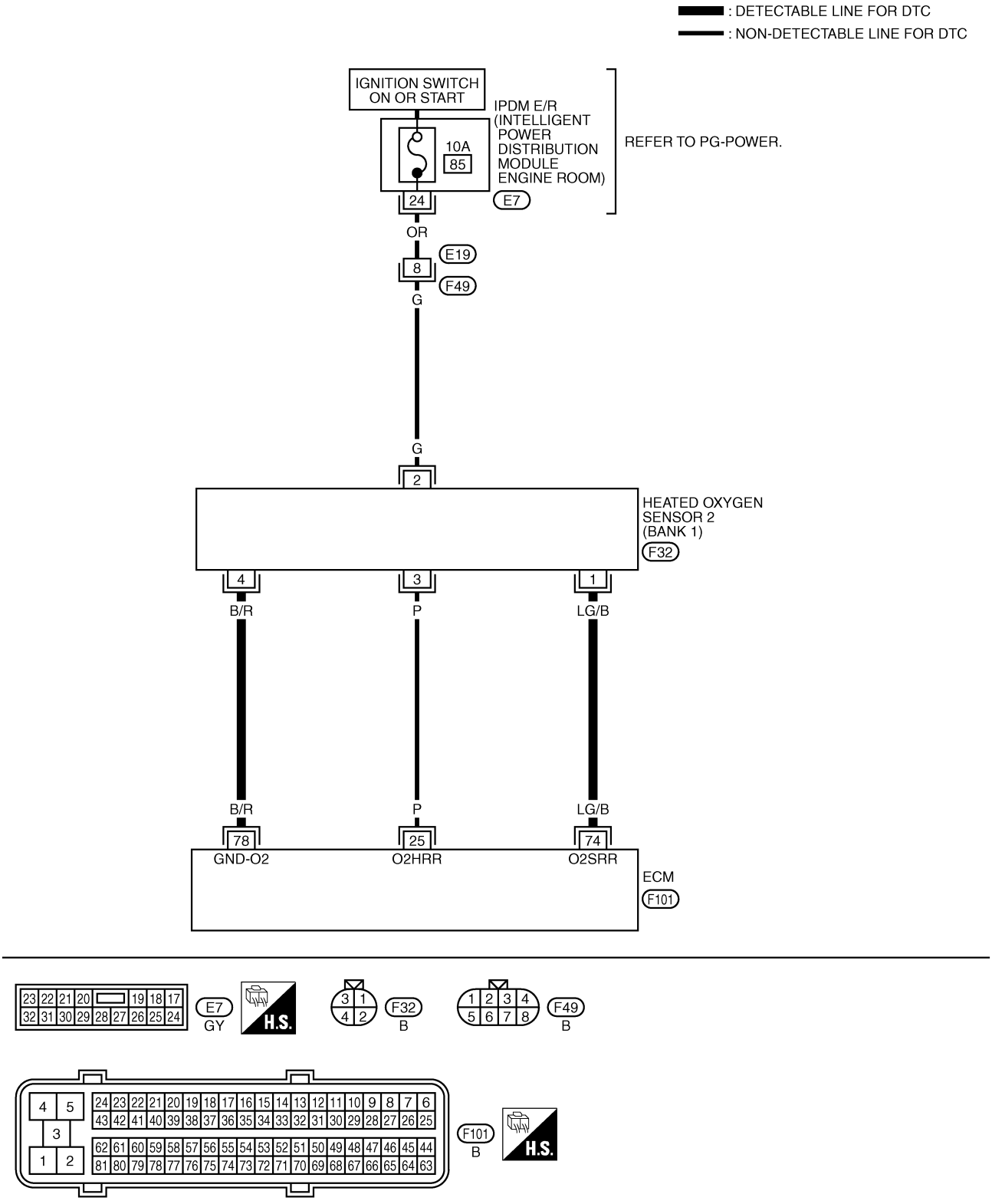

TBWM0292E

Specification data are reference values and are measured between each terminal and ground.

CAUTION:

Do not use ECM ground terminals when measuring input/output voltage. Doing so may result in damage to the ECM's transistor. Use a ground other than ECM terminals, such as the ground.

TERMINAL NO.	WIRE COLOR	ITEM	CONDITION	DATA (DC Voltage)
74	LG/B	Heated oxygen sensor 2 (bank 1)	**[Engine is running]** ● **Warm-up condition** ● Revving engine from idle to 3,000 rpm quickly after the following conditions are met – After keeping the engine speed between 3,500 and 4,000 rpm for 1 minute and at idle for 1 minute under no load	0 - Approximately 1.0V
78	B/R	Sensor ground (Heated oxygen sensor)	**[Engine is running]** ● **Warm-up condition** ● Idle speed	Approximately 0V

BANK 2

EC-O2S2B2-01

: DETECTABLE LINE FOR DTC

: NON-DETECTABLE LINE FOR DTC

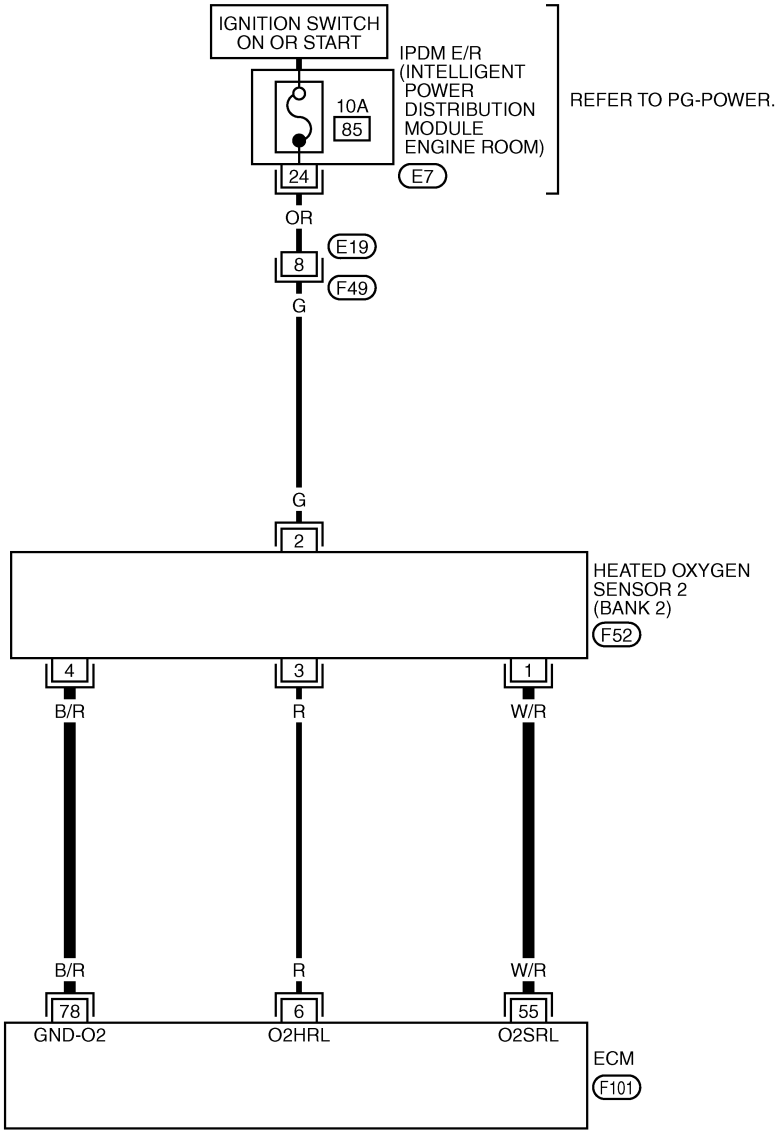

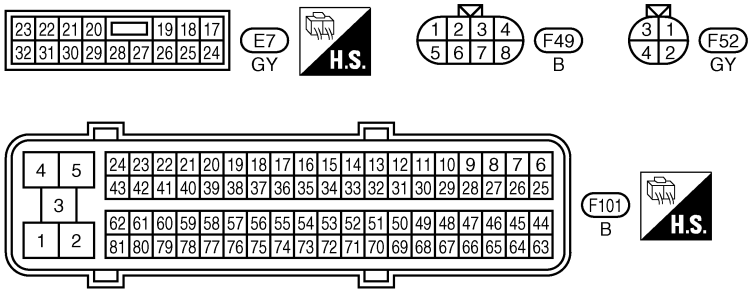

TBWM0293E

Specification data are reference values and are measured between each terminal and ground.

CAUTION:

Do not use ECM ground terminals when measuring input/output voltage. Doing so may result in damage to the ECM's transistor. Use a ground other than ECM terminals, such as the ground.

TERMINAL NO.	WIRE COLOR	ITEM	CONDITION	DATA (DC Voltage)
55	W/R	Heated oxygen sensor 2 (bank 2)	**[Engine is running]** ● **Warm-up condition** ● Revving engine from idle to 3,000 rpm quickly after the following conditions are met – After keeping the engine speed between 3,500 and 4,000 rpm for 1 minute and at idle for 1 minute under no load	0 - Approximately 1.0V
78	B/R	Sensor ground (Heated oxygen sensor)	**[Engine is running]** ● **Warm-up condition** ● Idle speed	Approximately 0V

Diagnostic Procedure

ABS006OM

1. CHECK GROUND CONNECTIONS

1. Turn ignition switch OFF.
2. Loosen and retighten ground three screws on the body. Refer to EC-170, "Ground Inspection" .

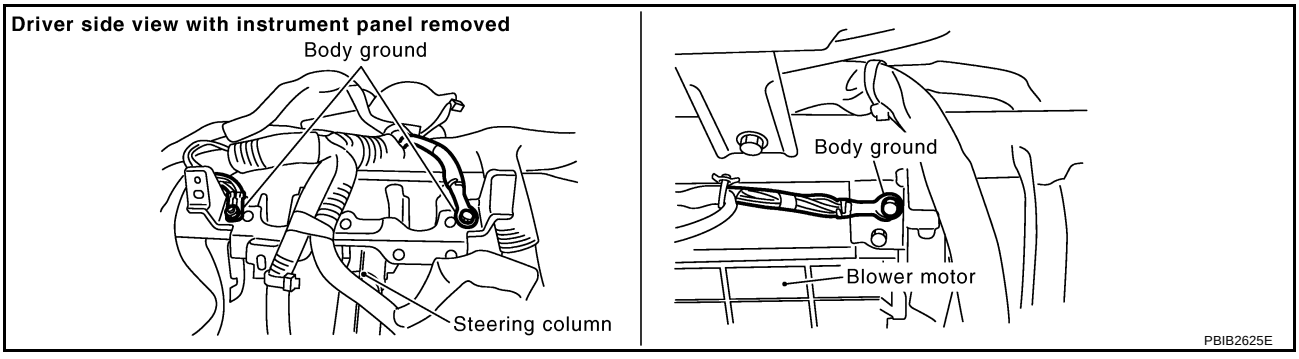

OK or NG

OK >> GO TO 2.
NG >> Repair or replace ground connections.

2. CHECK HO2S2 GROUND CIRCUIT FOR OPEN AND SHORT

1. Disconnect heated oxygen sensor 2 harness connector.
2. Disconnect ECM harness connector.
3. Check harness continuity between HO2S2 terminal 4 and ECM terminal 78.
   Refer to Wiring Diagram.

   Continuity should exist.

4. Also check harness for short to ground and short to power.

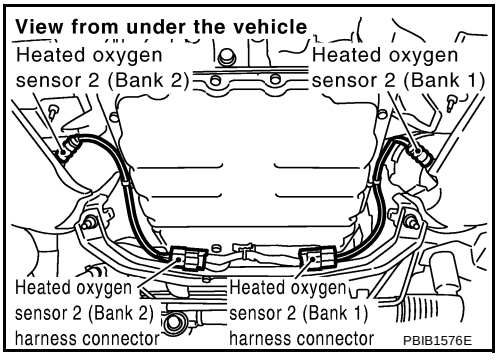

OK or NG

OK >> GO TO 3.
NG >> Repair open circuit or short to ground or short to ground or short to power in harness or connectors.

3. CHECK HO2S2 INPUT SIGNAL CIRCUIT FOR OPEN AND SHORT

1. Check harness continuity between ECM terminal and HO2S2 terminal as follows.
   Refer to Wiring Diagram.

DTC	Terminals		Bank
	ECM	Sensor	
P0138	74	1	1
P0158	55	1	2

Continuity should exist.

2. Check harness continuity between the following terminals and ground.
   Refer to Wiring Diagram.

DTC	Terminals		Bank
	ECM	Sensor	
P0138	74	1	1
P0158	55	1	2

Continuity should not exist.

3. Also check harness for short to power.

OK or NG

OK >> GO TO 4.
NG >> Repair open circuit or short to ground or short to power in harness or connectors.

4. CHECK HO2S2 CONNECTOR FOR WATER

Check connectors for water.

Water should not exist.

OK or NG

OK >> GO TO 5.
NG >> Repair or replace harness or connectors.

5. CHECK HEATED OXYGEN SENSOR 2

Refer to EC-235, "Component Inspection" .

OK or NG

OK >> GO TO 6.
NG >> Replace malfunctioning heated oxygen sensor 2.

6. CHECK INTERMITTENT INCIDENT

Refer to EC-163, "TROUBLE DIAGNOSIS FOR INTERMITTENT INCIDENT" .

>> **INSPECTION END**

Component Inspection

ABS006ON

HEATED OXYGEN SENSOR 2

With CONSULT-II

1. Turn ignition switch ON and select “DATA MONITOR” mode with CONSULT-II.
2. Start engine and warm it up to the normal operating temperature.
3. Turn ignition switch OFF and wait at least 10 seconds.
4. Start engine and keep the engine speed between 3,500 and 4,000 rpm for at least 1 minute under no load.
5. Let engine idle for 1 minute.

DATA MONITOR	
MONITOR	NO DTC
ENG SPEED	XXX rpm
COOLAN TEMP/S	XXX °C

SEF174Y

6. Select “FUEL INJECTION” in “ACTIVE TEST” mode, and select “HO2S2 (B1)/(B2)” as the monitor item with CONSULT-II.

ACTIVE TEST	
FUEL INJECTION	25 %
MONITOR	
ENG SPEED	XXX rpm
HO2S2 (B1)	XXX V
HO2S2 (B2)	XXX V

PBIB1672E

7. Check “HO2S2 (B1)/(B2)” at idle speed when adjusting “FUEL INJECTION” to ±25%.

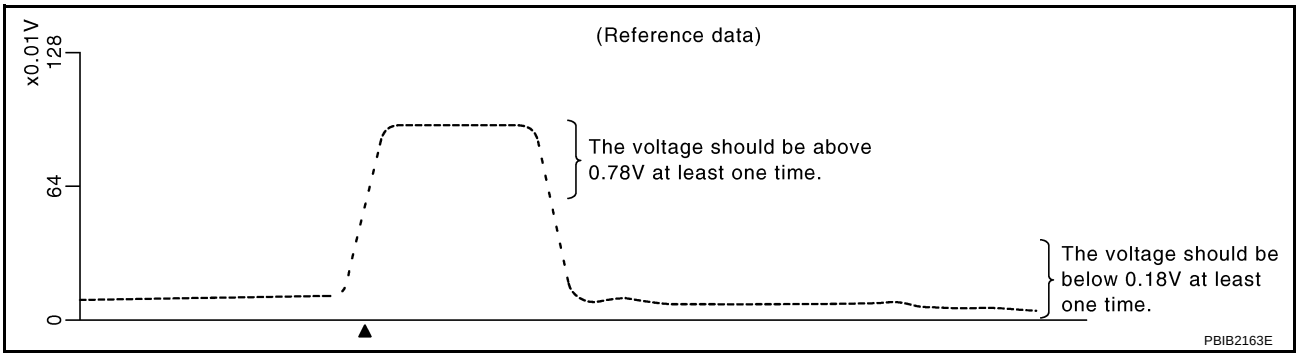

“HO2S2 (B1)/(B2)” should be above 0.78V at least once when the “FUEL INJECTION” is +25%.
“HO2S2 (B1)/(B2)” should be below 0.18V at least once when the “FUEL INJECTION” is –25%.

CAUTION:

- **Discard any heated oxygen sensor which has been dropped from a height of more than 0.5 m (19.7 in) onto a hard surface such as a concrete floor; use a new one.**
- **Before installing new oxygen sensor, clean exhaust system threads (using Oxygen Sensor Thread Cleaner tool J-43897-18 or J-43897-12) and approved anti-seize lubricant.**

Without CONSULT-II

1. Start engine and warm it up to the normal operating temperature.
2. Turn ignition switch OFF and wait at least 10 seconds.
3. Start engine and keep the engine speed between 3,500 and 4,000 rpm for at least 1 minute under no load.
4. Let engine idle for 1 minute.
5. Set voltmeter probes between ECM terminal 74 [HO2S2 (B1) signal] or 55 [HO2S2 (B2) signal] and ground.

6. Check the voltage when revving up to 4,000 rpm under no load at least 10 times.
   (Depress and release accelerator pedal as soon as possible.)
   The voltage should be above 0.78V at least once during this procedure.
   If the voltage is above 0.78V at step 6, step 7 is not necessary.
7. Keep vehicle at idling for 10 minutes, then check voltage. Or check the voltage when coasting from 80 km/h (50 MPH) in D position with “OD” OFF.
   The voltage should be below 0.18V at least once during this procedure.

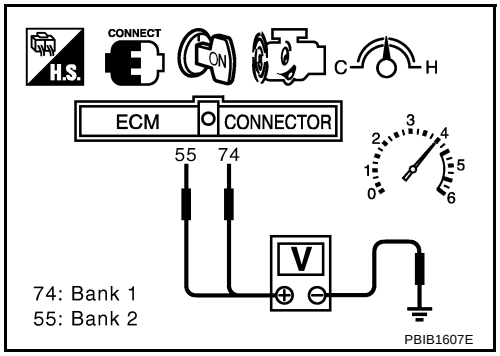

8. If NG, replace heated oxygen sensor 2.

CAUTION:

- **Discard any heated oxygen sensor which has been dropped from a height of more than 0.5 m (19.7 in) onto a hard surface such as a concrete floor; use a new one.**
- **Before installing new oxygen sensor, clean exhaust system threads using Oxygen Sensor Thread Cleaner tool J-43897-18 or J-43897-12 and approved anti-seize lubricant.**

Removal and Installation

ABS006OO

HEATED OXYGEN SENSOR 2

Refer to EM-26, "EXHAUST MANIFOLD AND THREE WAY CATALYST" .

DTC P0139, P0159 HO2S2

PFP:226A0

Component Description

ABS006OP

The heated oxygen sensor 2, after three way catalyst 1, monitors the oxygen level in the exhaust gas on each bank.
Even if switching characteristics of the air fuel ratio (A/F) sensor 1 are shifted, the air-fuel ratio is controlled to stoichiometric, by the signal from the heated oxygen sensor 2.
This sensor is made of ceramic zirconia. The zirconia generates voltage from approximately 1V in richer conditions to 0V in leaner conditions.
Under normal conditions the heated oxygen sensor 2 is not used for engine control operation.

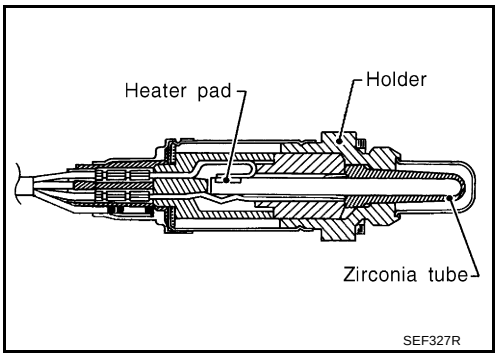

CONSULT-II Reference Value in Data Monitor Mode

ABS006OQ

Specification data are reference values.

MONITOR ITEM	CONDITION		SPECIFICATION
HO2S2 (B1) HO2S2 (B2)	● Warm-up condition ● After keeping engine speed between 3,500 and 4,000 rpm for 1 minute and at idle for 1 minute under no load.	Revving engine from idle to 3,000 rpm quickly.	0 - 0.3V ←→ Approx. 0.6 - 1.0V
HO2S2 MNTR (B1) HO2S2 MNTR (B2)			LEAN ←→ RICH

On Board Diagnosis Logic

ABS006OR

The heated oxygen sensor 2 has a much longer switching time between rich and lean than the air fuel ratio (A/F) sensor 1. The oxygen storage capacity before the three way catalyst 1 causes the longer switching time. To judge the malfunctions of heated oxygen sensor 2, ECM monitors whether the switching response of the sensor's voltage is faster than specified during the various driving condition such as fuel-cut.

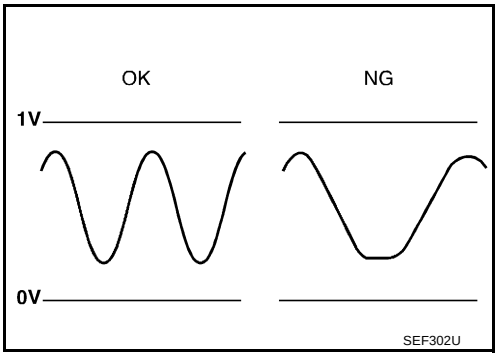

DTC No.	Trouble diagnosis name	DTC detecting condition	Possible cause
P0139 0139 (Bank 1)	Heated oxygen sensor 2 circuit slow response	It takes more time for the sensor to respond between rich and lean than the specified time.	● Harness or connectors (The sensor circuit is open or shorted) ● Heated oxygen sensor 2 ● Fuel pressure ● Fuel injector ● Intake air leaks
P0159 0159 (Bank 2)			

DTC Confirmation Procedure

ABS006OS

NOTE:
If DTC Confirmation Procedure has been previously conducted, always turn ignition switch OFF and wait at least 10 seconds before conducting the next test.

WITH CONSULT-II

TESTING CONDITION:
For better results, perform “DTC WORK SUPPORT” at a temperature of 0 to 30 °C (32 to 86 °F).

1. Turn ignition switch ON and select “DATA MONITOR” mode with CONSULT-II.
2. Start engine and warm it up to the normal operating temperature.
3. Turn ignition switch OFF and wait at least 10 seconds.
4. Start engine and keep the engine speed between 3,500 and 4,000 rpm for at least 1 minute under no load.
5. Let engine idle for 1 minute.
6. Make sure that “COOLAN TEMP/S” indicates more than 70°C (158°F).
   If not, warm up engine and go to next step when “COOLAN TEMP/S” indication reaches to 70°C (158°F).

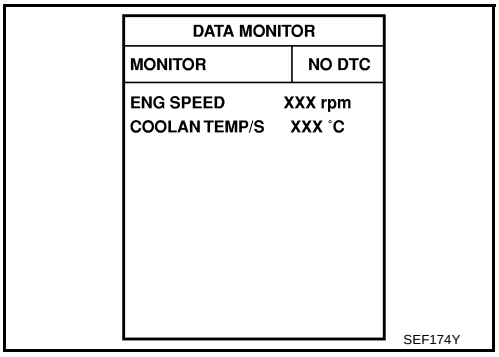

7. Select “HO2S2 (B1) P0139” or “HO2S2 (B2) P0159” of “HO2S2” in “DTC WORK SUPPORT” mode with CONSULT-II.
8. Start engine and following the instruction of CONSULT-II.

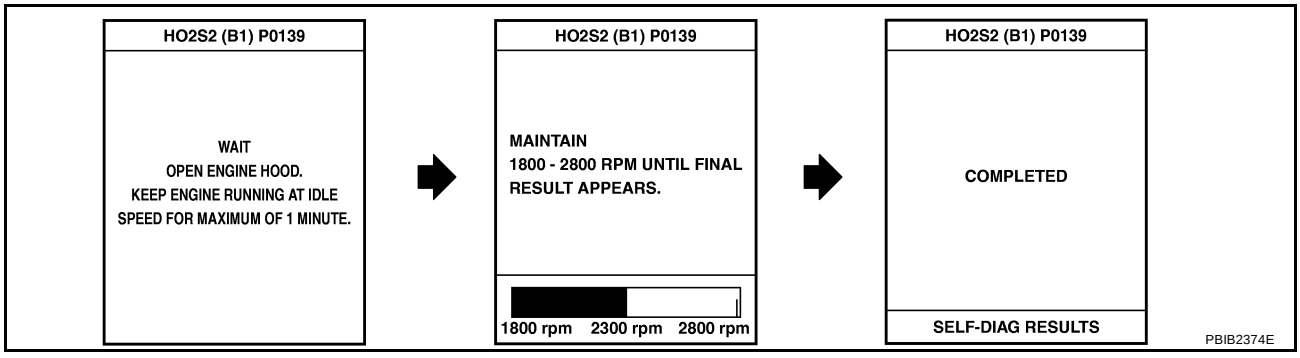

NOTE:
It will take at most 10 minutes until “COMPLETED” is displayed.

9. Make sure that “OK” is displayed after touching “SELF-DIAG RESULTS”.
   If “NG” is displayed, refer to EC-243, "Diagnostic Procedure" .
   If “CAN NOT BE DIAGNOSED” is displayed, perform the following.

a. Turn ignition switch OFF and leave the vehicle in a cool place (soak the vehicle).
b. Return to step 1.

Overall Function Check

ABS006OT

Use this procedure to check the overall function of the heated oxygen sensor 2 circuit. During this check, a 1st trip DTC might not be confirmed.

WITH GST

1. Start engine and warm it up to the normal operating temperature.
2. Turn ignition switch OFF and wait at least 10 seconds.
3. Start engine and keep the engine speed between 3,500 and 4,000 rpm for at least 1 minute under no load.
4. Let engine idle for 1 minute.
5. Set voltmeter probes between ECM terminal 74 [HO2S2 (B1) signal] or 55 [HO2S2 (B2) signal] and ground.

6. Check the voltage when revving up to 4,000 rpm under no load at least 10 times.
   (Depress and release accelerator pedal as soon as possible.)
   A change of voltage should be more than 0.06V for 1 second during this procedure.
   If the voltage can be confirmed in step 6, step 7 is not necessary.
7. Keep vehicle at idling for 10 minutes, then check the voltage. Or check the voltage when coasting from 80 km/h (50 MPH) in D position with “OD” OFF.
   A change of voltage should be more than 0.06V for 1 second during this procedure.
8. If NG, go to EC-243, "Diagnostic Procedure" .

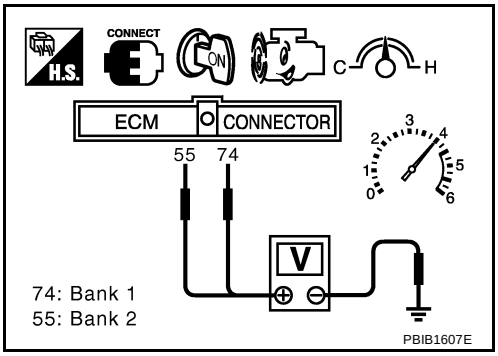

Wiring Diagram
BANK 1

ABS006OU

EC-O2S2B1-01

: DETECTABLE LINE FOR DTC
: NON-DETECTABLE LINE FOR DTC

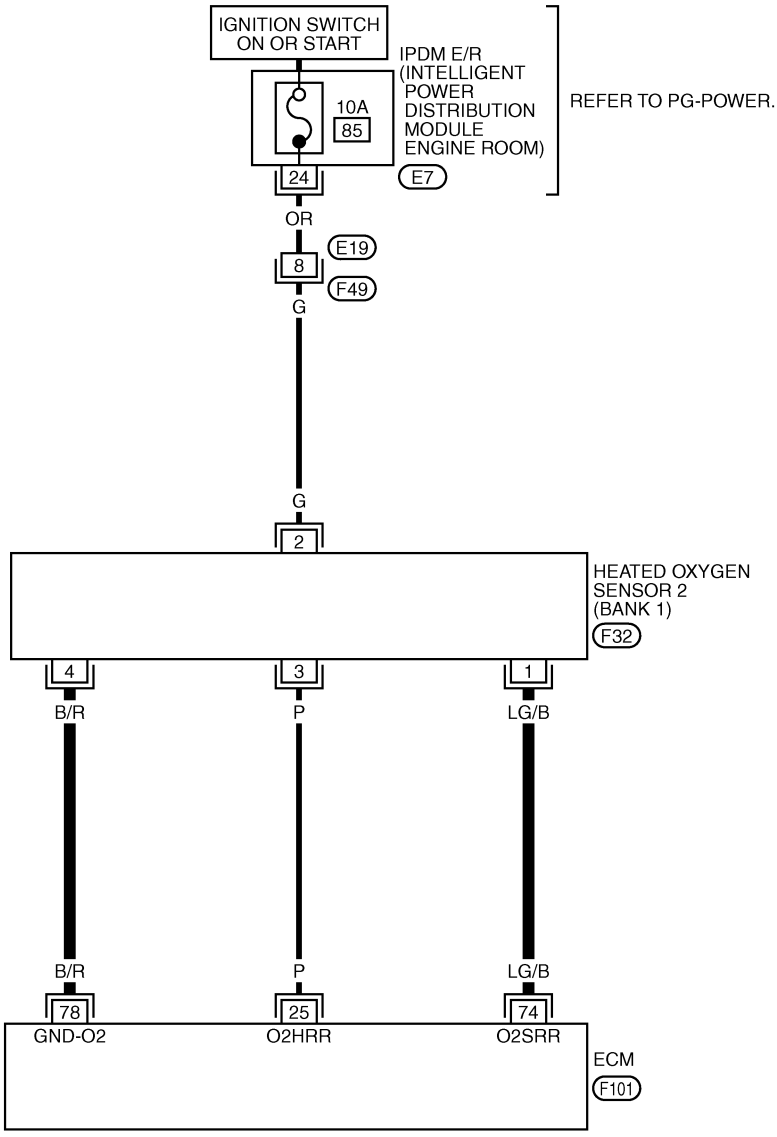

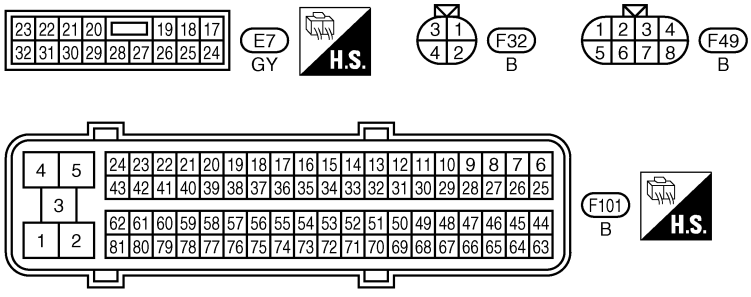

TBWM0292E

Specification data are reference values and are measured between each terminal and ground.

CAUTION:

Do not use ECM ground terminals when measuring input/output voltage. Doing so may result in damage to the ECM's transistor. Use a ground other than ECM terminals, such as the ground.

TERMINAL NO.	WIRE COLOR	ITEM	CONDITION	DATA (DC Voltage)
74	LG/B	Heated oxygen sensor 2 (bank 1)	**[Engine is running]** ● **Warm-up condition** ● Revving engine from idle to 3,000 rpm quickly after the following conditions are met – After keeping the engine speed between 3,500 and 4,000 rpm for 1 minute and at idle for 1 minute under no load	0 - Approximately 1.0V
78	B/R	Sensor ground (Heated oxygen sensor)	**[Engine is running]** ● **Warm-up condition** ● Idle speed	Approximately 0V

BANK 2

EC-O2S2B2-01

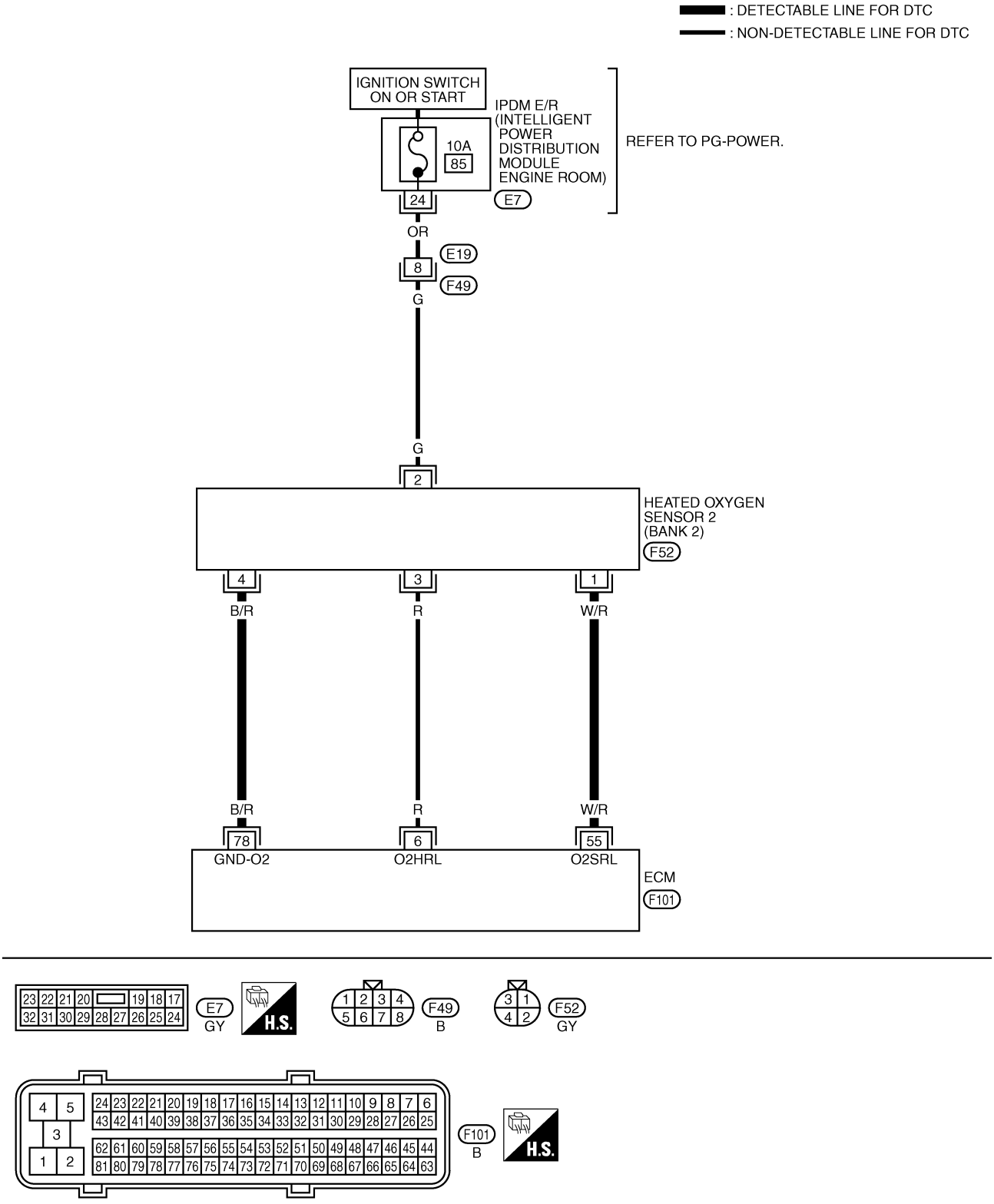

TBWM0293E

Specification data are reference values and are measured between each terminal and ground.

CAUTION:

Do not use ECM ground terminals when measuring input/output voltage. Doing so may result in damage to the ECM's transistor. Use a ground other than ECM terminals, such as the ground.

TERMINAL NO.	WIRE COLOR	ITEM	CONDITION	DATA (DC Voltage)
55	W/R	Heated oxygen sensor 2 (bank 2)	**[Engine is running]** ● **Warm-up condition** ● Revving engine from idle to 3,000 rpm quickly after the following conditions are met – After keeping the engine speed between 3,500 and 4,000 rpm for 1 minute and at idle for 1 minute under no load	0 - Approximately 1.0V
78	B/R	Sensor ground (Heated oxygen sensor)	**[Engine is running]** ● **Warm-up condition** ● Idle speed	Approximately 0V

Diagnostic Procedure

ABS006OV

1. CHECK GROUND CONNECTIONS

1. Turn ignition switch OFF.
2. Loosen and retighten ground three screws on the body. Refer to EC-170, "Ground Inspection" .

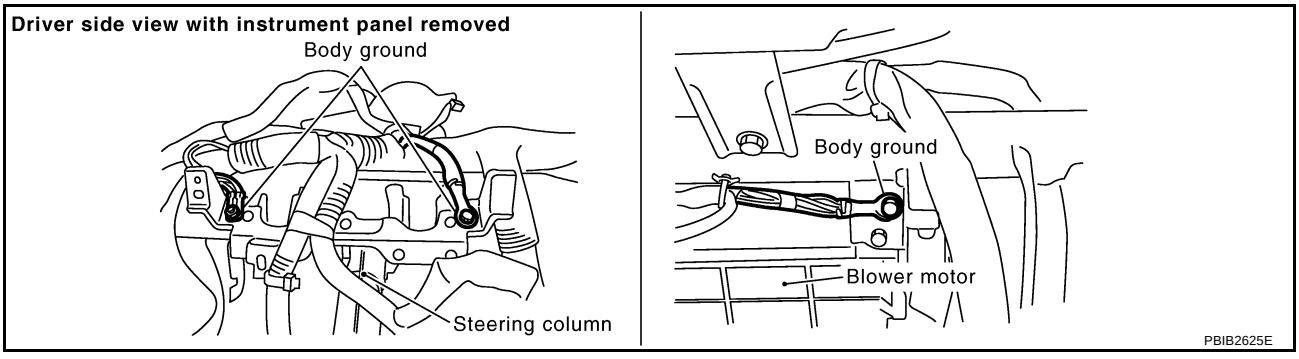

OK or NG

OK >> GO TO 2.
NG >> Repair or replace ground connections.

2. CLEAR THE SELF-LEARNING DATA

With CONSULT-II

1. Start engine and warm it up to normal operating temperature.
2. Select “SELF-LEARNING CONT” in “WORK SUPPORT” mode with CONSULT-II.
3. Clear the self-learning control coefficient by touching “CLEAR”.
4. Run engine for at least 10 minutes at idle speed.
   Is the 1st trip DTC P0171, P0172, P0174 or P0175 detected?
   Is it difficult to start engine?

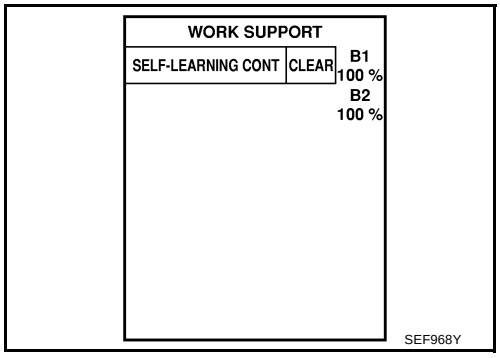

Without CONSULT-II

1. Start engine and warm it up to normal operating temperature.
2. Turn ignition switch OFF.
3. Disconnect mass air flow sensor harness connector, and restart and run engine for at least 5 seconds at idle speed.
4. Stop engine and reconnect mass air flow sensor harness connector.
5. Make sure DTC P0102 is displayed.
6. Erase the DTC memory. Refer to EC-68, "HOW TO ERASE EMISSION-RELATED DIAGNOSTIC INFORMATION" .
7. Make sure DTC P0000 is displayed.
8. Run engine for at least 10 minutes at idle speed.
   Is the 1st trip DTC P0171, P0172, P0174 or P0175 detected?
   Is it difficult to start engine?

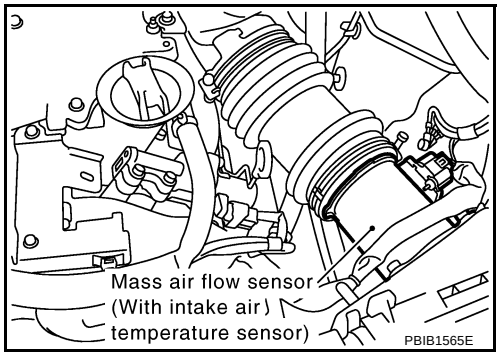

Yes or No

Yes >> Perform trouble diagnosis for DTC P0171, P0174 or P0172, P0175. Refer to EC-248 or EC-258 .
No >> GO TO 3.

3. CHECK HO2S2 GROUND CIRCUIT FOR OPEN AND SHORT

1. Turn ignition switch OFF.
2. Disconnect heated oxygen sensor 2 harness connector.
3. Disconnect ECM harness connector.
4. Check harness continuity between HO2S2 terminal 4 and ECM terminal 78.
   Refer to Wiring Diagram.

   Continuity should exist.

5. Also check harness for short to ground and short to power.

OK or NG

OK >> GO TO 4.
NG >> Repair open circuit or short to ground or short to power in harness or connectors.

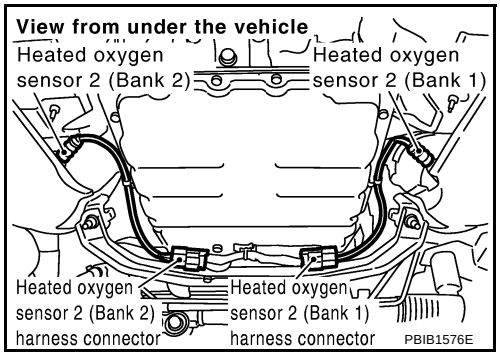

4. CHECK HO2S2 INPUT SIGNAL CIRCUIT FOR OPEN AND SHORT

1. Check harness continuity between ECM terminal and HO2S2 terminal as follows. Refer to Wiring Diagram.

DTC	Terminals		Bank
	ECM	Sensor	
P0139	74	1	1
P0159	55	1	2

Continuity should exist.

2. Check harness continuity between the following terminals and ground. Refer to Wiring Diagram.

DTC	Terminals		Bank
	ECM	Sensor	
P0139	74	1	1
P0159	55	1	2

Continuity should not exist.

3. Also check harness for short to power.

OK or NG

OK >> GO TO 5.
NG >> Repair open circuit or short to ground or short to power in harness or connectors.

5. CHECK HEATED OXYGEN SENSOR 2

Refer to EC-245, "Component Inspection" .

OK or NG

OK >> GO TO 6.
NG >> Replace malfunctioning heated oxygen sensor 2.

6. CHECK INTERMITTENT INCIDENT

Refer to EC-163, "TROUBLE DIAGNOSIS FOR INTERMITTENT INCIDENT" .

>> **INSPECTION END**

Component Inspection

ABS006OW

HEATED OXYGEN SENSOR 2

With CONSULT-II

1. Turn ignition switch ON and select “DATA MONITOR” mode with CONSULT-II.
2. Start engine and warm it up to the normal operating temperature.
3. Turn ignition switch OFF and wait at least 10 seconds.
4. Start engine and keep the engine speed between 3,500 and 4,000 rpm for at least 1 minute under no load.
5. Let engine idle for 1 minute.

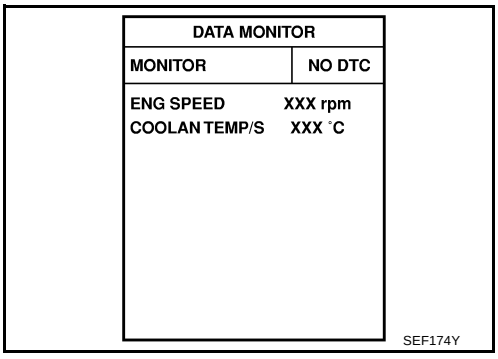

6. Select “FUEL INJECTION” in “ACTIVE TEST” mode, and select “HO2S2 (B1)/(B2)” as the monitor item with CONSULT-II.

ACTIVE TEST	
FUEL INJECTION	25 %
MONITOR	
ENG SPEED	XXX rpm
HO2S2 (B1)	XXX V
HO2S2 (B2)	XXX V

PBIB1672E

7. Check “HO2S2 (B1)/(B2)” at idle speed when adjusting “FUEL INJECTION” to ±25%.

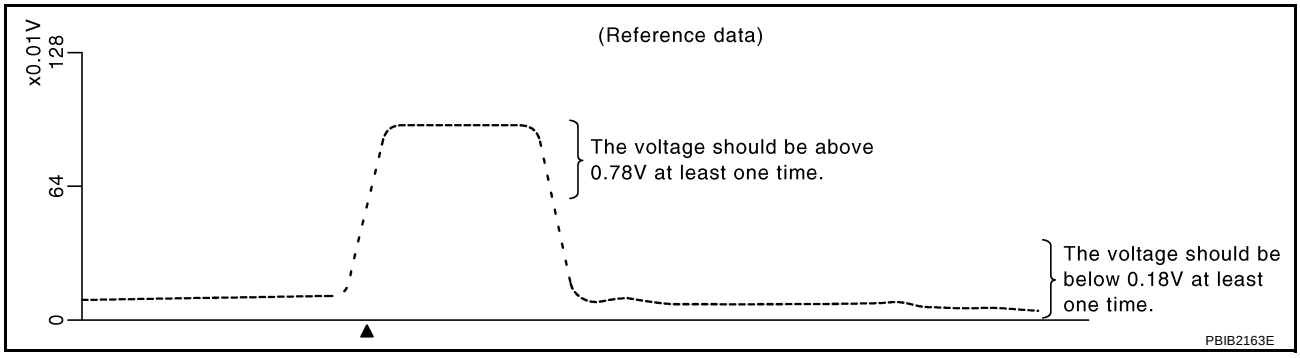

“HO2S2 (B1)/(B2)” should be above 0.78V at least once when the “FUEL INJECTION” is +25%.
“HO2S2 (B1)/(B2)” should be below 0.18V at least once when the “FUEL INJECTION” is –25%.

CAUTION:

- **Discard any heated oxygen sensor which has been dropped from a height of more than 0.5 m (19.7 in) onto a hard surface such as a concrete floor; use a new one.**
- **Before installing new oxygen sensor, clean exhaust system threads using Oxygen Sensor Thread Cleaner tool J-43897-18 or J-43897-12 and approved anti-seize lubricant.**

Without CONSULT-II

1. Start engine and warm it up to the normal operating temperature.
2. Turn ignition switch OFF and wait at least 10 seconds.
3. Start engine and keep the engine speed between 3,500 and 4,000 rpm for at least 1 minute under no load.
4. Let engine idle for 1 minute.
5. Set voltmeter probes between ECM terminal 74 [HO2S2 (B1) signal] or 55 [HO2S2 (B2) signal] and ground.
6. Check the voltage when revving up to 4,000 rpm under no load at least 10 times.
   (Depress and release accelerator pedal as soon as possible.)
   The voltage should be above 0.78V at least once during this procedure.
   If the voltage is above 0.78V at step 6, step 7 is not necessary.
7. Keep vehicle at idling for 10 minutes, then check voltage. Or check the voltage when coasting from 80 km/h (50 MPH) in D position with “OD” OFF.
   The voltage should be below 0.18V at least once during this procedure.

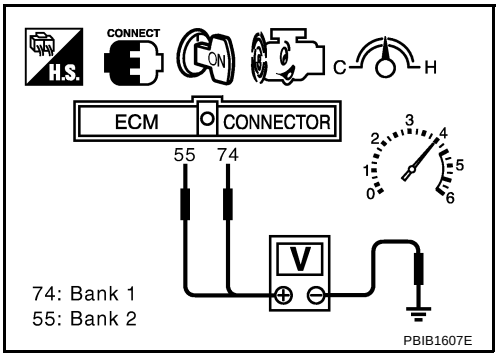

8. If NG, replace heated oxygen sensor 2.

CAUTION:

- **Discard any heated oxygen sensor which has been dropped from a height of more than 0.5 m (19.7 in) onto a hard surface such as a concrete floor; use a new one.**
- **Before installing new oxygen sensor, clean exhaust system threads using Oxygen Sensor Thread Cleaner tool J-43897-18 or J-43897-12 and approved anti-seize lubricant.**

Removal and Installation

ABS006OX

HEATED OXYGEN SENSOR 2

Refer to EM-26, "EXHAUST MANIFOLD AND THREE WAY CATALYST" .

DTC P0171, P0174 FUEL INJECTION SYSTEM FUNCTION

PFP:16600

On Board Diagnosis Logic

ABS006OY

With the Air-Fuel Mixture Ratio Self-Learning Control, the actual mixture ratio can be brought closely to the theoretical mixture ratio based on the mixture ratio feedback signal from the air fuel ratio (A/F) sensor 1. The ECM calculates the necessary compensation to correct the offset between the actual and the theoretical ratios.
In case the amount of the compensation value is extremely large (the actual mixture ratio is too lean.), the ECM judges the condition as the fuel injection system malfunction and lights up the MIL (2 trip detection logic).

Sensor	Input signal to ECM	ECM function	Actuator
Air fuel ratio (A/F) sensor 1	Density of oxygen in exhaust gas (Mixture ratio feedback signal)	Fuel injection control	Fuel injector

DTC No.	Trouble diagnosis name	DTC detecting condition	Possible cause
P0171 0171 (Bank 1)	Fuel injection system too lean	● Fuel injection system does not operate properly. ● The amount of mixture ratio compensation is too large. (The mixture ratio is too lean.)	● Intake air leaks ● Air fuel ratio (A/F) sensor 1 ● Fuel injector ● Exhaust gas leaks ● Incorrect fuel pressure ● Lack of fuel ● Mass air flow sensor ● Incorrect PCV hose connection
P0174 0174 (Bank 2)			

DTC Confirmation Procedure

ABS006OZ

NOTE:
If DTC Confirmation Procedure has been previously conducted, always turn ignition switch OFF and wait at least 10 seconds before conducting the next test.

WITH CONSULT-II

1. Start engine and warm it up to normal operating temperature.
2. Turn ignition switch OFF and wait at least 10 seconds.
3. Turn ignition switch ON and select “SELF-LEARNING CONT” in “WORK SUPPORT” mode with CONSULT-II.
4. Clear the self-learning control coefficient by touching “CLEAR”.
5. Select “DATA MONITOR” mode with CONSULT-II.
6. Start engine again and let it idle for at least 10 minutes.
   The 1st trip DTC P0171 or P0174 should be detected at this stage, if a malfunction exists. If so, go to EC-252, "Diagnostic Procedure" .

   NOTE:
   If 1st trip DTC is not detected during above procedure, performing the following procedure is advised.

a. Turn ignition switch OFF and wait at least 10 seconds.
b. Start engine and drive the vehicle under the similar conditions to (1st trip) Freeze Frame Data for 10 minutes. Refer to the table below.
   Hold the accelerator pedal as steady as possible.

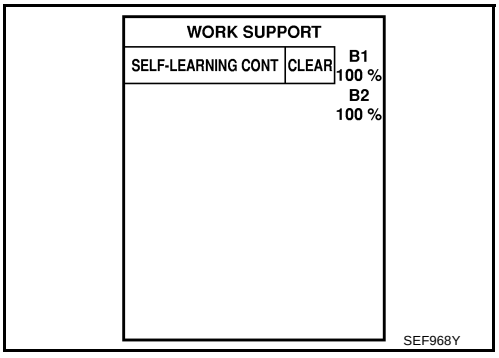

The similar conditions to (1st trip) Freeze Frame Data means the vehicle operation that the following conditions should be satisfied at the same time.

Engine speed	Engine speed in the freeze frame data ± 400 rpm
Vehicle speed	Vehicle speed in the freeze frame data ± 10 km/h (6 MPH)

Engine coolant temperature (T) condition	When the freeze frame data shows lower than 70 °C (158 °F), T should be lower than 70 °C (158 °F).
	When the freeze frame data shows higher than or equal to 70 °C (158 °F), T should be higher than or equal to 70 °C (158 °F).

7. If it is difficult to start engine at step 6, the fuel injection system has a malfunction, too.
8. Crank engine while depressing accelerator pedal. If engine starts, go to EC-252, "Diagnostic Procedure" . If engine does not start, check exhaust and intake air leak visually.

WITH GST

1. Start engine and warm it up to normal operating temperature.
2. Turn ignition switch OFF and wait at least 10 seconds.
3. Disconnect mass air flow sensor harness connector.
4. Restart engine and let it idle for at least 5 seconds.
5. Stop engine and reconnect mass air flow sensor harness connector.
6. Select Service $03 with GST. Make sure DTC P0102 is detected.
7. Select Service $04 with GST and erase the DTC P0102.
8. Start engine again and let it idle for at least 10 minutes.
9. Select Service $07 with GST. The 1st trip DTC P0171 or P0174 should be detected at this stage, if a malfunction exists. If so, go to EC-252, "Diagnostic Procedure" .

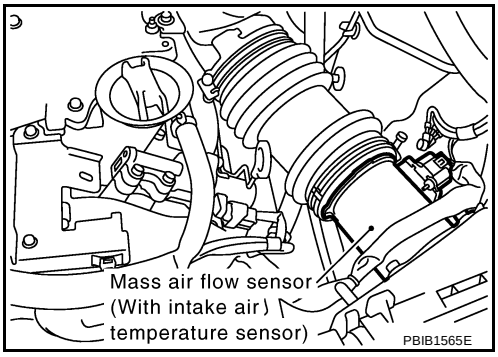

NOTE:
If 1st trip DTC is not detected during above procedure, performing the following procedure is advised.

a. Turn ignition switch OFF and wait at least 10 seconds.
b. Start engine and drive the vehicle under the similar conditions to (1st trip) Freeze Frame Data for 10 minutes. Refer to the table below.
Hold the accelerator pedal as steady as possible.

The similar conditions to (1st trip) Freeze Frame Data means the vehicle operation that the following conditions should be satisfied at the same time.

Engine speed	Engine speed in the freeze frame data ± 400 rpm
Vehicle speed	Vehicle speed in the freeze frame data ± 10 km/h (6 MPH)
Engine coolant temperature (T) condition	When the freeze frame data shows lower than 70 °C (158 °F), T should be lower than 70 °C (158 °F).
	When the freeze frame data shows higher than or equal to 70 °C (158 °F), T should be higher than or equal to 70 °C (158 °F).

10. If it is difficult to start engine at step 8, the fuel injection system has a malfunction.
11. Crank engine while depressing accelerator pedal. If engine starts, go to EC-252, "Diagnostic Procedure" . If engine does not start, check exhaust and intake air leak visually.

Wiring Diagram
BANK 1

ABS006P0

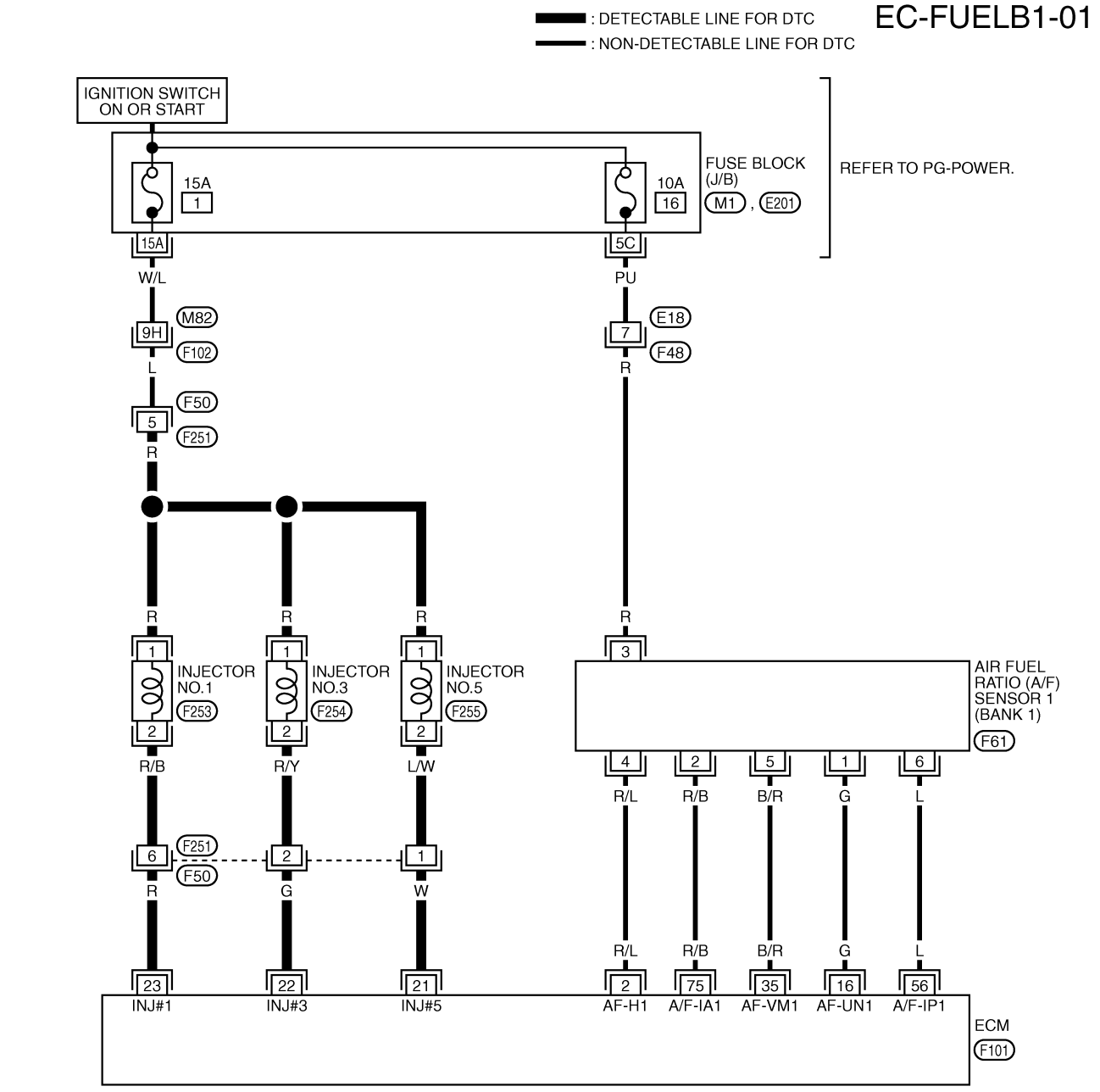

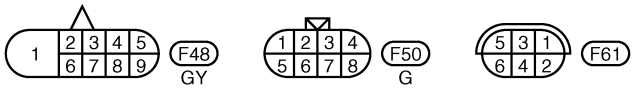

REFER TO THE FOLLOWING.
F102 -SUPER MULTIPLE JUNCTION (SMJ)
M1 , E201 -FUSE BLOCK-JUNCTION BOX (J/B)

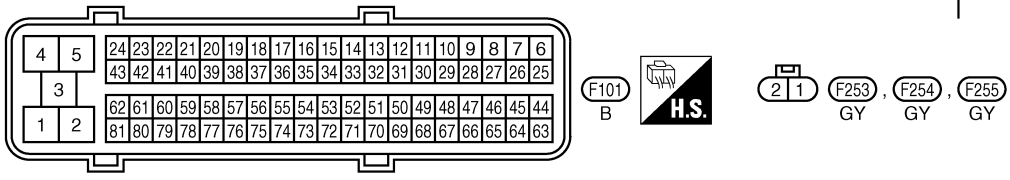

TBWM0386E

BANK 2

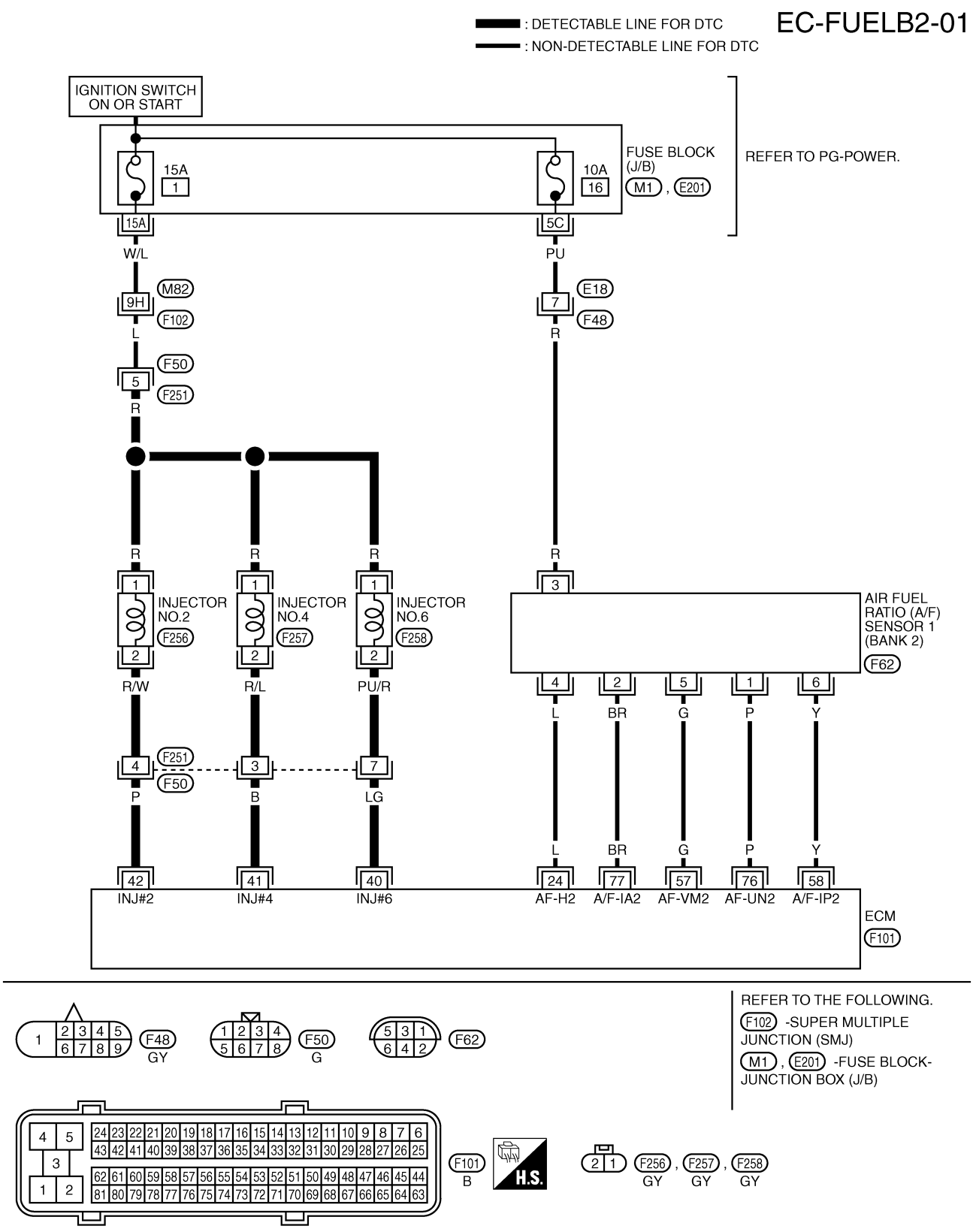
: DETECTABLE LINE FOR DTC
: NON-DETECTABLE LINE FOR DTC
EC-FUELB2-01
IGNITION SWITCH ON OR START
15A
1
10A
16
FUSE BLOCK (J/B)
M1 , E201
REFER TO PG-POWER.
15A
5C
W/L
PU
M82
9H
F102
L
E18
7
F48
R
F50
5
F251
R
R
R
R
R
1
INJECTOR NO.2
F256
2
R/W
1
INJECTOR NO.4
F257
2
R/L
1
INJECTOR NO.6
F258
2
PU/R
3
AIR FUEL RATIO (A/F) SENSOR 1 (BANK 2)
F62
4
2
5
1
6
L
BR
G
P
Y
F251
4
F50
P
3
B
7
LG
L
BR
G
P
Y
42
INJ#2
41
INJ#4
40
INJ#6
24
AF-H2
77
A/F-IA2
57
AF-VM2
76
AF-UN2
58
A/F-IP2
ECM
F101
F48
GY
F50
G
F62
REFER TO THE FOLLOWING.
F102 -SUPER MULTIPLE JUNCTION (SMJ)
M1 , E201 -FUSE BLOCK-JUNCTION BOX (J/B)
F101
B
H.S.
F256 , F257 , F258
GY GY GY
TBWM0387E

Diagnostic Procedure

ABS006P1

1. CHECK EXHAUST GAS LEAK

1. Start engine and run it at idle.
2. Listen for an exhaust gas leak before three way catalyst 1.

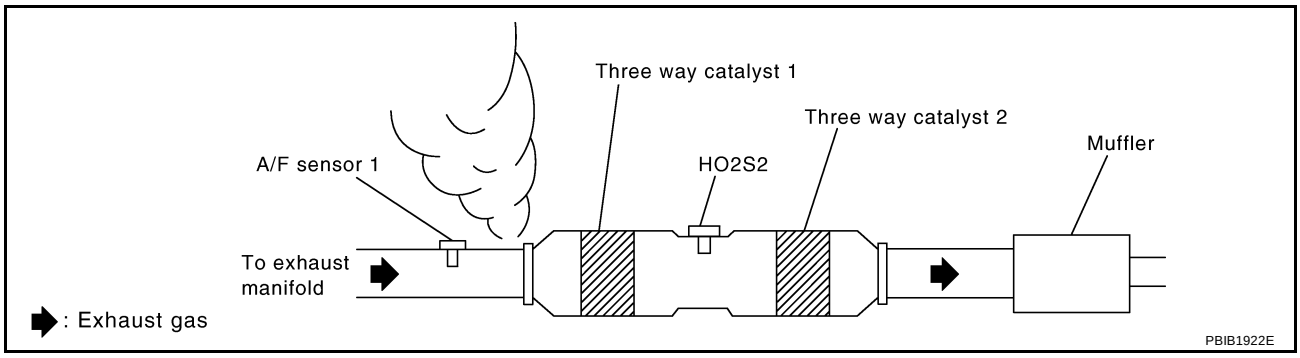

OK or NG

OK >> GO TO 2.
NG >> Repair or replace.

2. CHECK FOR INTAKE AIR LEAK

1. Listen for an intake air leak after the mass air flow sensor.
2. Check PCV hose connection.

OK or NG

OK >> GO TO 3.
NG >> Repair or replace.

3. CHECK AIR FUEL RATIO (A/F) SENSOR 1 INPUT SIGNAL CIRCUIT

1. Turn ignition switch OFF.
2. Disconnect corresponding air fuel ration (A/F) sensor 1 harness connector.

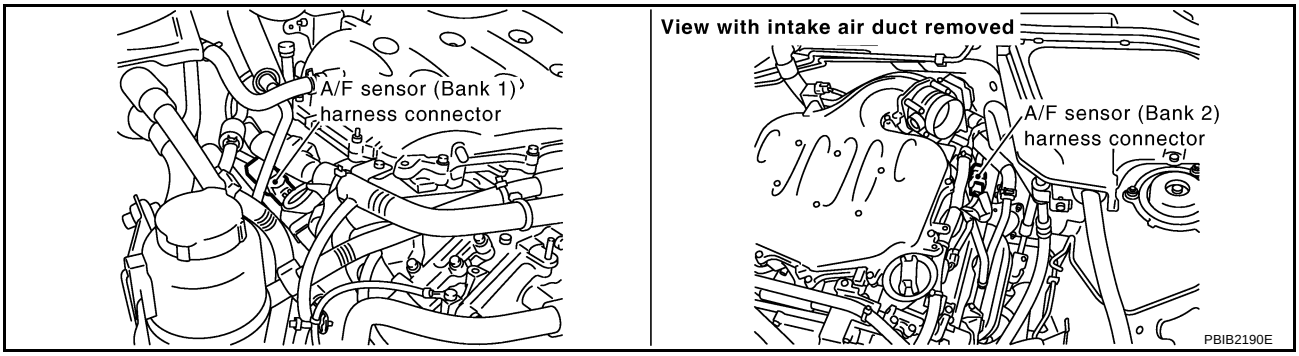

3. Disconnect ECM harness connector.
4. Check harness continuity between the following terminals.
   Refer to Wiring Diagram.

	A/F sensor 1 terminal	ECM terminal
Bank 1	1	16
	2	75
	5	35
	6	56
Bank 2	1	76
	2	77
	5	57
	6	58

Continuity should exist.

5. Check harness continuity between the following terminals and ground.
   Refer to Wiring Diagram.

Bank 1		Bank 2	
A/F sensor 1 terminal	ECM terminal	A/F sensor 1 terminal	ECM terminal
1	16	1	76
2	75	2	77
5	35	5	57
6	56	6	58

Continuity should not exist.

6. Also check harness for short to ground and short to power.

OK or NG

OK >> GO TO 4.
NG >> Repair open circuit or short to ground or short to power in harness or connectors.

4. CHECK FUEL PRESSURE

1. Release fuel pressure to zero. Refer to EC-99, "FUEL PRESSURE RELEASE" .
2. Install fuel pressure gauge and check fuel pressure. Refer to EC-99, "FUEL PRESSURE CHECK" .

At idling: Approximately 350 kPa (3.57 kg/cm^2 , 51 psi)

OK or NG

OK >> GO TO 6.
NG >> GO TO 5.

5. DETECT MALFUNCTIONING PART

Check the following.

- Fuel pump and circuit (Refer to EC-668, "FUEL PUMP CIRCUIT" .)
- Fuel pressure regulator (Refer to EC-99, "FUEL PRESSURE CHECK")
- Fuel lines (Refer to FL-3, "Checking Fuel Lines" .)
- Fuel filter for clogging

>> Repair or replace.

6. CHECK MASS AIR FLOW SENSOR

With CONSULT-II

1. Install all removed parts.
2. Check “MASS AIR FLOW” in “DATA MONITOR” mode with CONSULT-II.

2.0 - 6.0 g·m/sec: at idling
7.0 - 20.0 g·m/sec: at 2,500 rpm

With GST

1. Install all removed parts.
2. Check mass air flow sensor signal in Service $01 with GST.

2.0 - 6.0 g·m/sec: at idling
7.0 - 20.0 g·m/sec: at 2,500 rpm

OK or NG

OK (With CONSULT-II)>>GO TO 7.
OK (Without COUSULT-II)>>GO TO 8.
NG >> Check connectors for rusted terminals or loose connections in the mass air flow sensor circuit or ground. Refer to EC-186, "DTC P0101 MAF SENSOR" .

7. CHECK FUNCTION OF INJECTOR

With CONSULT-II

1. Start engine.
2. Perform “POWER BALANCE” in “ACTIVE TEST” mode with CONSULT-II.
3. Make sure that each circuit produces a momentary engine speed drop.

ACTIVE TEST	
POWER BALANCE	
MONITOR	
ENG SPEED	XXX rpm
MAS A/F SE-B1	XXX V

PBIB0133E

OK or NG

OK >> GO TO 10.
NG >> Perform trouble diagnosis for INJECTOR CIRCUIT, refer to EC-661, "INJECTOR CIRCUIT" .

8. CHECK FUNCTION OF INJECTOR-I

Without CONSULT-II

1. Turn ignition switch OFF.
2. Disconnect harness connectors F50, F251
3. Turn ignition switch ON.

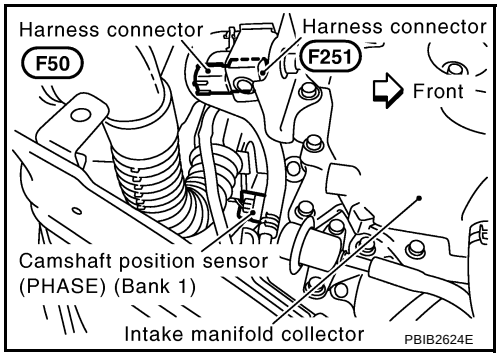

4. Check voltage between harness connector F50 terminal 5 and ground with CONSULT-II or tester.

   Voltage: Battery voltage

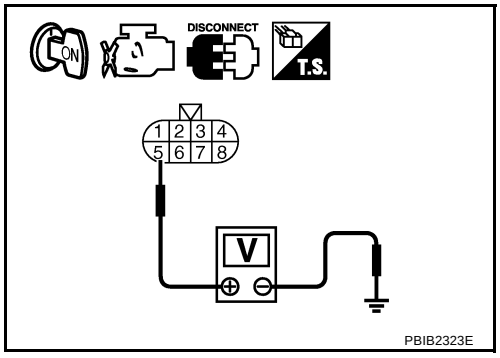

5. Turn ignition switch OFF.
6. Disconnect ECM harness connector.
7. Check harness continuity between harness connector F50 and ECM as follows.
   Refer to Wiring Diagram.

Cylinder	Harness connector F50 terminal	ECM terminal
1	6	23
2	4	42
3	2	22
4	3	41
5	1	21
6	7	40

   Continuity should exist.

8. Also check harness for short to ground and short to power.

OK or NG

OK >> GO TO 9.
NG >> Perform trouble diagnosis for INJECTOR CIRCUIT, refer to EC-661, "INJECTOR CIRCUIT" .

9. CHECK FUNCTION OF INJECTOR-II

Provide battery voltage between harness connector F251 as follows and then interrupt it. Listen to each injector operating sound.

Cylinder	Harness connector F251 terminal	
	(+)	(–)
1	5	6
2	5	4
3	5	2
4	5	3
5	5	1
6	5	7

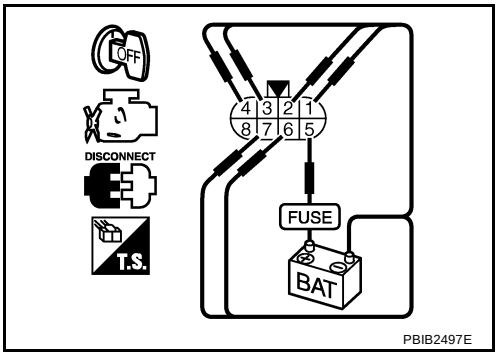

Operating sound should exist.

OK or NG

OK >> GO TO 10.
NG >> Perform trouble diagnosis for INJECTOR CIRCUIT, refer to EC-661, "INJECTOR CIRCUIT" .

10. CHECK INJECTOR

1. Confirm that the engine is cooled down and there are no fire hazards near the vehicle.
2. Turn ignition switch OFF.
3. Reconnect all harness connectors disconnected.
4. Disconnect all injector harness connectors.
5. Remove injector gallery assembly. Refer to EM-45, "FUEL INJECTOR AND FUEL TUBE" .
   Keep fuel hose and all injectors connected to injector gallery.
6. For DTC P0171, reconnect injector harness connectors on bank 1.
   For DTC P0174, reconnect injector harness connectors on bank 2.
7. Disconnect all ignition coil harness connectors.
8. Prepare pans or saucers under each injector.
9. Crank engine for about 3 seconds.
   For DTC P0171, make sure that fuel sprays out from injectors on bank 1.
   For DTC P0174, make sure that fuel sprays out from injectors on bank 2.

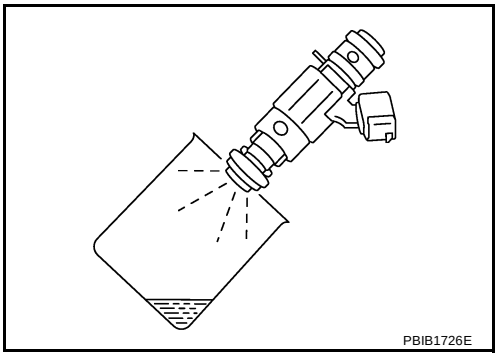

Fuel should be sprayed evenly for each injector.

OK or NG

OK >> GO TO 11.
NG >> Replace injectors from which fuel does not spray out. Always replace O-ring with new ones.

11. CHECK INTERMITTENT INCIDENT

Refer to EC-163, "TROUBLE DIAGNOSIS FOR INTERMITTENT INCIDENT" .

>> **INSPECTION END**

DTC P0172, P0175 FUEL INJECTION SYSTEM FUNCTION

PFP:16600

On Board Diagnosis Logic

ABS006P2

With the Air-Fuel Mixture Ratio Self-Learning Control, the actual mixture ratio can be brought closely to the theoretical mixture ratio based on the mixture ratio feedback signal from the air fuel ratio (A/F) sensor 1. The ECM calculates the necessary compensation to correct the offset between the actual and the theoretical ratios.
In case the amount of the compensation value is extremely large (the actual mixture ratio is too rich.), the ECM judges the condition as the fuel injection system malfunction and lights up the MIL (2 trip detection logic).

Sensor	Input signal to ECM	ECM function	Actuator
Air fuel ration (A/F) sensor 1	Density of oxygen in exhaust gas (Mixture ratio feedback signal)	Fuel injection control	Fuel injector

DTC No.	Trouble diagnosis name	DTC detecting condition	Possible cause
P0172 0172 (Bank 1)	Fuel injection system too rich	● Fuel injection system does not operate properly. ● The amount of mixture ratio compensation is too large. (The mixture ratio is too rich.)	● Air fuel ratio (A/F) sensor 1 ● Fuel injector ● Exhaust gas leaks ● Incorrect fuel pressure ● Mass air flow sensor
P0175 0175 (Bank 2)			

DTC Confirmation Procedure

ABS006P3

NOTE:
If DTC Confirmation Procedure has been previously conducted, always turn ignition switch OFF and wait at least 10 seconds before conducting the next test.

WITH CONSULT-II

1. Start engine and warm it up to normal operating temperature.
2. Turn ignition switch OFF and wait at least 10 seconds.
3. Turn ignition switch ON and select “SELF-LEARNING CONT” in “WORK SUPPORT” mode with CONSULT-II.
4. Clear the self-learning control coefficient by touching “CLEAR”.
5. Select “DATA MONITOR” mode with CONSULT-II.
6. Start engine again and let it idle for at least 10 minutes.
   The 1st trip DTC P0172, P0175 should be detected at this stage, if a malfunction exists. If so, go to EC-262, "Diagnostic Procedure" .

   NOTE:
   If 1st trip DTC is not detected during above procedure, performing the following procedure is advised.

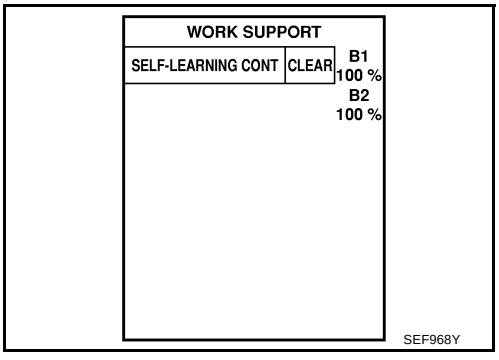

a. Turn ignition switch OFF and wait at least 10 seconds.
b. Start engine and drive the vehicle under the similar conditions to (1st trip) Freeze Frame Data for a certain time. Refer to the table below.
   Hold the accelerator pedal as steady as possible.

   The similar conditions to (1st trip) Freeze Frame Data means the vehicle operation that the following conditions should be satisfied at the same time.

Engine speed	Engine speed in the freeze frame data ± 400 rpm
Vehicle speed	Vehicle speed in the freeze frame data ± 10 km/h (6 MPH)
Engine coolant temperature (T) condition	When the freeze frame data shows lower than 70 °C (158 °F), T should be lower than 70 °C (158 °F).
	When the freeze frame data shows higher than or equal to 70 °C (158 °F), T should be higher than or equal to 70 °C (158 °F).

7. If it is difficult to start engine at step 6, the fuel injection system has a malfunction, too.

8. Crank engine while depressing accelerator pedal.
   If engine starts, go to EC-262, "Diagnostic Procedure" . If engine does not start, remove ignition plugs and check for fouling, etc.

WITH GST

1. Start engine and warm it up to normal operating temperature.
2. Turn ignition switch OFF and wait at least 10 seconds.
3. Disconnect mass air flow sensor harness connector. Then restart and run engine for at least 5 seconds at idle speed.
4. Stop engine and reconnect mass air flow sensor harness connector.
5. Select Service $03 with GST. Make sure DTC P0102 is detected.
6. Select Service $04 with GST and erase the DTC P0102.
7. Start engine again and let it idle for at least 10 minutes.
8. Select Service $07 with GST. The 1st trip DTC P0172 or P0175 should be detected at this stage, if a malfunction exists. If so, go to EC-262, "Diagnostic Procedure" .

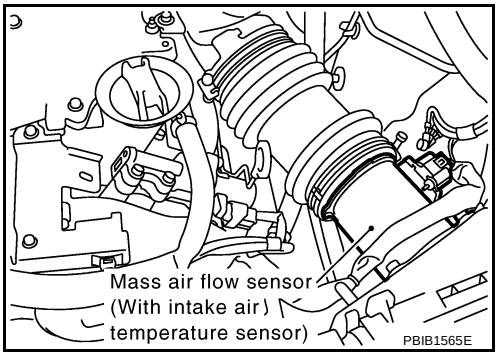

NOTE:
If 1st trip DTC is not detected during above procedure, performing the following procedure is advised.

a. Turn ignition switch OFF and wait at least 10 seconds.
b. Start engine and drive the vehicle under the similar conditions to (1st trip) Freeze Frame Data for a certain time. Refer to the table below.
   Hold the accelerator pedal as steady as possible.

   The similar conditions to (1st trip) Freeze Frame Data means the vehicle operation that the following conditions should be satisfied at the same time.

Engine speed	Engine speed in the freeze frame data ± 400 rpm
Vehicle speed	Vehicle speed in the freeze frame data ± 10 km/h (6 MPH)
Engine coolant temperature (T) condition	When the freeze frame data shows lower than 70 °C (158 °F), T should be lower than 70 °C (158 °F).
	When the freeze frame data shows higher than or equal to 70 °C (158 °F), T should be higher than or equal to 70 °C (158 °F).

9. If it is difficult to start engine at step 7, the fuel injection system has a malfunction.
10. Crank engine while depressing accelerator pedal.
    If engine starts, go to EC-262, "Diagnostic Procedure" . If engine does not start, remove ignition plugs and check for fouling, etc.

Wiring Diagram
BANK 1

ABS006P4

EC-FUELB1-01

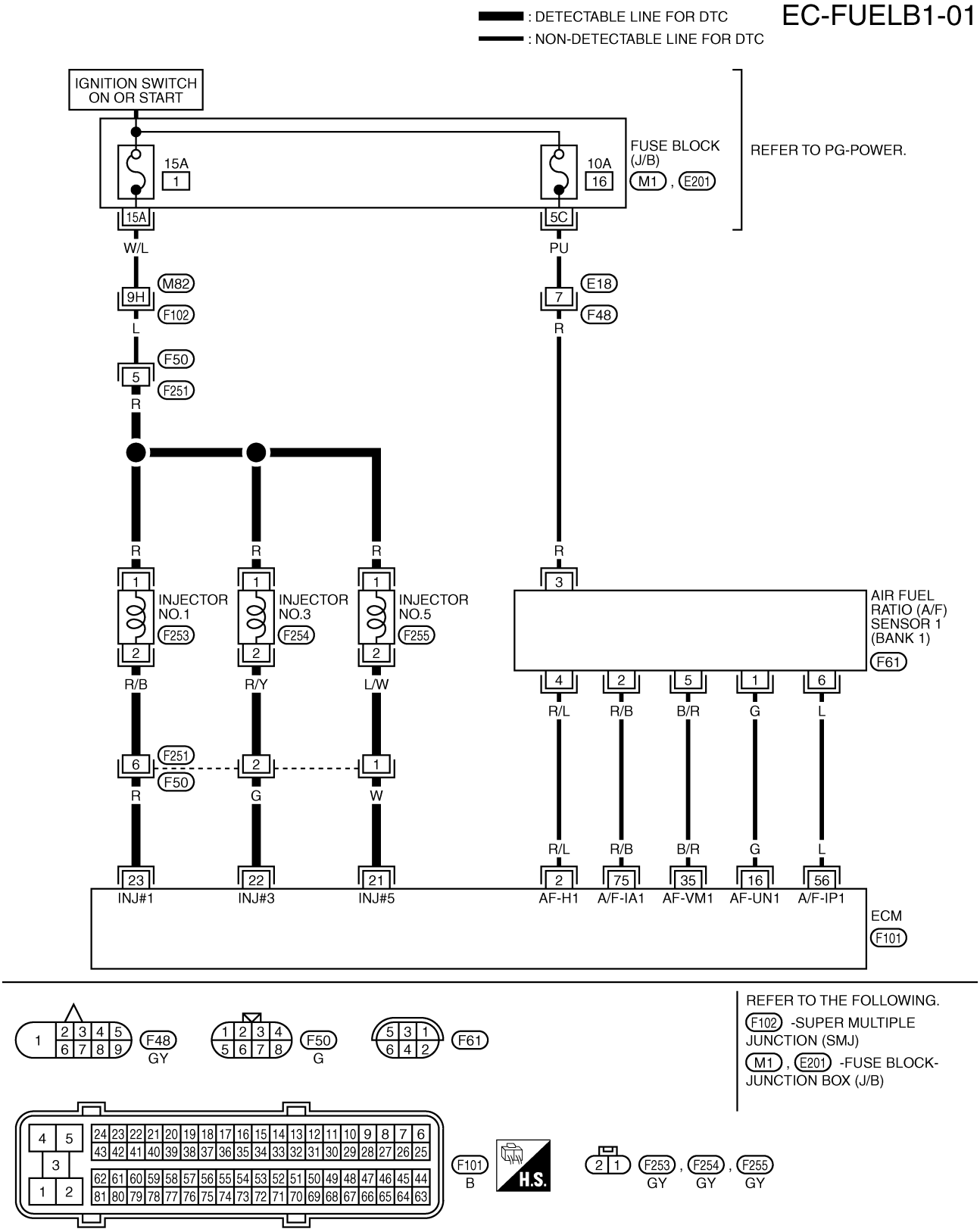

BANK 2

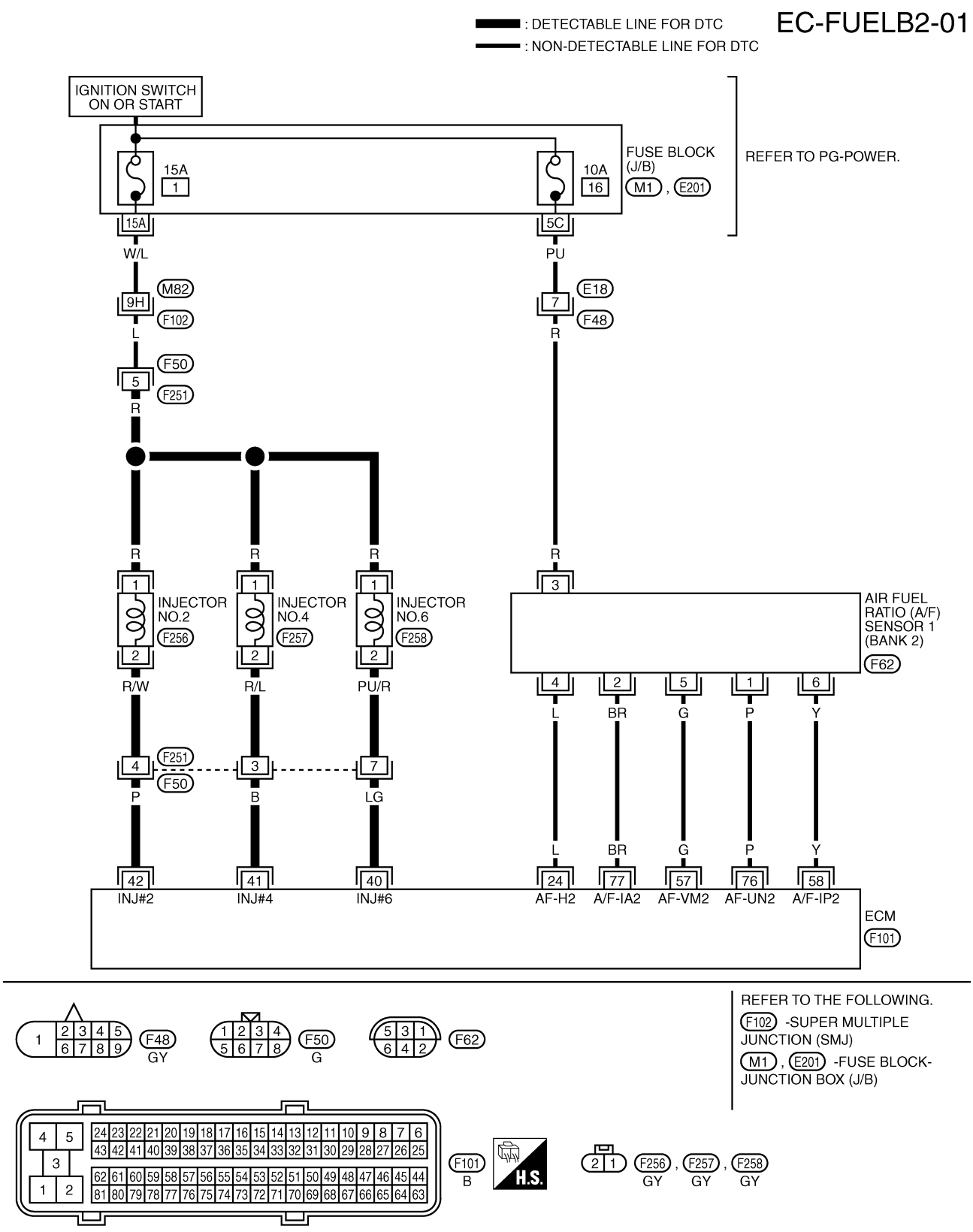
: DETECTABLE LINE FOR DTC
: NON-DETECTABLE LINE FOR DTC
EC-FUELB2-01
IGNITION SWITCH ON OR START
15A
1
10A
16
FUSE BLOCK (J/B)
M1 , E201
REFER TO PG-POWER.
15A
5C
W/L
PU
M82
9H
F102
L
E18
7
F48
R
F50
5
F251
R
INJECTOR NO.2
F256
INJECTOR NO.4
F257
INJECTOR NO.6
F258
R/W
R/L
PU/R
AIR FUEL RATIO (A/F) SENSOR 1 (BANK 2)
F62
L
BR
G
P
Y
F251
F50
P
B
LG
INJ#2
INJ#4
INJ#6
AF-H2
A/F-IA2
AF-VM2
AF-UN2
A/F-IP2
ECM
F101
REFER TO THE FOLLOWING.
F102 -SUPER MULTIPLE JUNCTION (SMJ)
M1 , E201 -FUSE BLOCK-JUNCTION BOX (J/B)
F48
GY
F50
G
F62
F101
B
H.S.
F256 , F257 , F258
GY GY GY
TBWM0387E

Diagnostic Procedure

ABS006P5

1. CHECK EXHAUST GAS LEAK

1. Start engine and run it at idle.
2. Listen for an exhaust gas leak before three way catalyst 1.

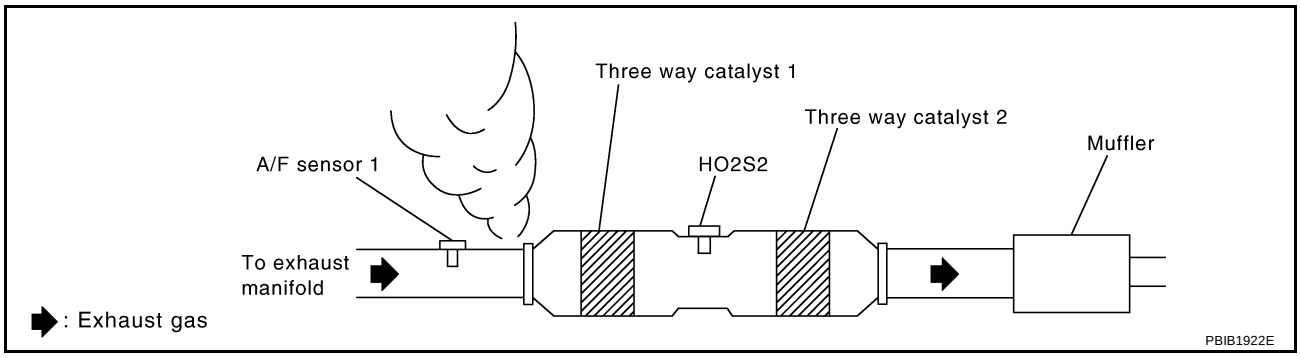

OK or NG

OK >> GO TO 2.
NG >> Repair or replace.

2. CHECK FOR INTAKE AIR LEAK

Listen for an intake air leak after the mass air flow sensor.

OK or NG

OK >> GO TO 3.
NG >> Repair or replace.

3. CHECK A/F SENSOR 1 INPUT SIGNAL CIRCUIT

1. Turn ignition switch OFF.
2. Disconnect corresponding A/F sensor 1 harness connector.

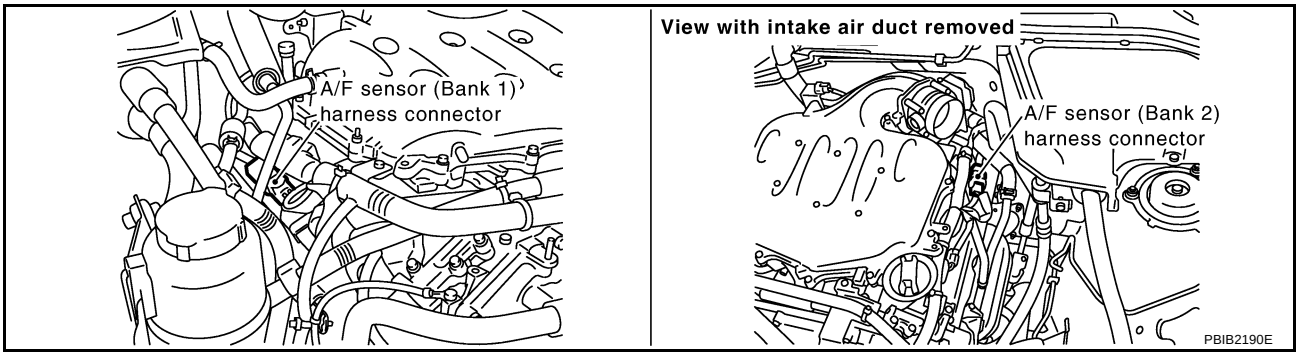

3. Disconnect ECM harness connector.
4. Check harness continuity between the following terminals.
   Refer to Wiring Diagram.

	A/F sensor 1 terminal	ECM terminal
Bank 1	1	16
	2	75
	5	35
	6	56
Bank 2	1	76
	2	77
	5	57
	6	58

Continuity should exist.

5. Check harness continuity between the following terminals and ground.
   Refer to Wiring Diagram.

Bank 1		Bank 2	
A/F sensor 1 terminal	ECM terminal	A/F sensor 1 terminal	ECM terminal
1	16	1	76
2	75	2	77
5	35	5	57
6	56	6	58

Continuity should not exist.

6. Also check harness for short to ground and short to power.

OK or NG

OK >> GO TO 4.
NG >> Repair open circuit or short to ground or short to power in harness or connectors.

4. CHECK FUEL PRESSURE

1. Release fuel pressure to zero. Refer to EC-99, "FUEL PRESSURE RELEASE" .
2. Install fuel pressure gauge and check fuel pressure. Refer to EC-99, "FUEL PRESSURE CHECK" .

At idling: Approximately 350 kPa (3.57 kg/cm^2 , 51 psi)

OK or NG

OK >> GO TO 6.
NG >> GO TO 5.

5. DETECT MALFUNCTIONING PART

Check the following.

- Fuel pump and circuit (Refer to EC-668, "FUEL PUMP CIRCUIT" .)
- Fuel pressure regulator (Refer to EC-99, "FUEL PRESSURE CHECK" .)

>> Repair or replace.

6. CHECK MASS AIR FLOW SENSOR

With CONSULT-II

1. Install all removed parts.
2. Check “MASS AIR FLOW” in “DATA MONITOR” mode with CONSULT-II.

2.0 - 6.0 g·m/sec: at idling
7.0 - 20.0 g·m/sec: at 2,500 rpm

With GST

1. Install all removed parts.
2. Check mass air flow sensor signal in Service $01 with GST.

2.0 - 6.0 g·m/sec: at idling
7.0 - 20.0 g·m/sec: at 2,500 rpm

OK or NG

OK (With CONSULT-II)>>GO TO 7.
OK (Without CONSULT-II)>>GO TO 8.
NG >> Check connectors for rusted terminals or loose connections in the mass air flow sensor circuit or ground. Refer to EC-186, "DTC P0101 MAF SENSOR" .

7. CHECK FUNCTION OF INJECTOR

With CONSULT-II

1. Start engine.
2. Perform “POWER BALANCE” in “ACTIVE TEST” mode with CONSULT-II.
3. Make sure that each circuit produces a momentary engine speed drop.

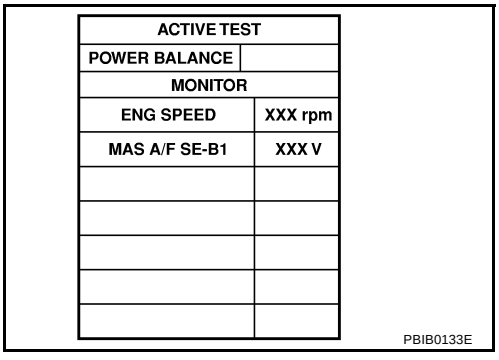

ACTIVE TEST	
POWER BALANCE	
MONITOR	
ENG SPEED	XXX rpm
MAS A/F SE-B1	XXX V

PBIB0133E

OK or NG

OK >> GO TO 10.
NG >> Perform trouble diagnosis for INJECTOR CIRCUIT, refer to EC-661, "INJECTOR CIRCUIT" .

8. CHECK FUNCTION OF INJECTOR-I

Without CONSULT-II

1. Stop engine.
2. Disconnect harness connector F50, F251
3. Turn ignition switch ON.

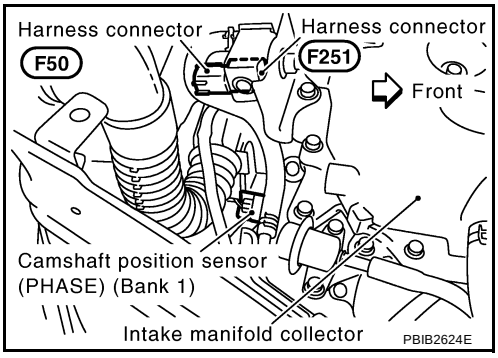

4. Check voltage between harness connector F50 terminal 5 and ground with CONSULT-II or tester.

   Voltage: Battery voltage

5. Turn ignition switch OFF.
6. Disconnect ECM harness connector.
7. Check harness continuity between harness connector F50 and ECM as follows.
   Refer to Wiring Diagram.

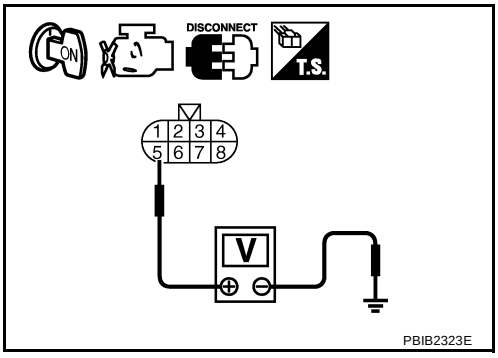

Cylinder	Harness connector F50 terminal	ECM terminal
1	6	23
2	4	42
3	2	22
4	3	41
5	1	21
6	7	40

   Continuity should exist.

8. Also check harness for short to ground and short to power.

OK or NG

OK >> GO TO 9.
NG >> Perform trouble diagnosis for INJECTOR CIRCUIT, refer to EC-661, "INJECTOR CIRCUIT" .

9. CHECK FUNCTION OF INJECTOR-II

Provide battery voltage between harness connector F251 as follows and then interrupt it. Listen to each injector operating sound.

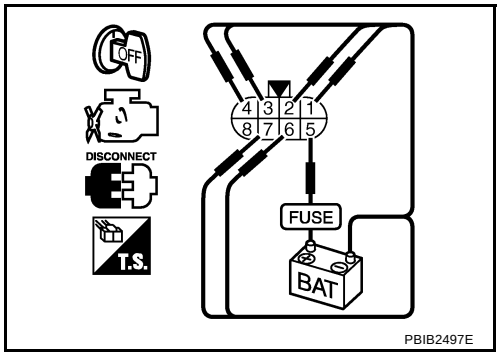

Cylinder	Harness connector F251 terminal	
	(+)	(–)
1	5	6
2	5	4
3	5	2
4	5	3
5	5	1
6	5	7

Operating sound should exist.

OK or NG

OK >> GO TO 10.
NG >> Perform trouble diagnosis for INJECTOR CIRCUIT, refer to EC-661, "INJECTOR CIRCUIT" .

10. CHECK INJECTOR

1. Remove injector assembly. Refer to EM-45, "FUEL INJECTOR AND FUEL TUBE" .
   Keep fuel hose and all injectors connected to injector gallery.
2. Confirm that the engine is cooled down and there are no fire hazards near the vehicle.
3. Reconnect all harness connectors disconnected.
4. Disconnect all injector harness connectors.
5. Disconnect all ignition coil harness connectors.
6. Prepare pans or saucers under each injectors.
7. Crank engine for about 3 seconds.
   Make sure fuel does not drip from injector.

OK or NG

OK (Does not drip.)>>GO TO 11.
NG (Drips.)>>Replace the injectors from which fuel is dripping. Always replace O-ring with new one.

11. CHECK INTERMITTENT INCIDENT

Refer to EC-163, "TROUBLE DIAGNOSIS FOR INTERMITTENT INCIDENT" .

>> **INSPECTION END**

DTC P0181 FTT SENSOR

PFP:22630

Component Description

ABS006P6

The fuel tank temperature sensor is used to detect the fuel temperature inside the fuel tank. The sensor modifies a voltage signal from the ECM. The modified signal returns to the ECM as the fuel temperature input. The sensor uses a thermistor which is sensitive to the change in temperature. The electrical resistance of the thermistor decreases as temperature increases.

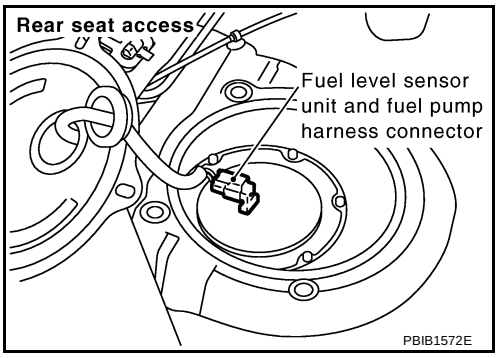

<Reference data>

Fluid temperature °C (°F)	Voltage* V	Resistance kΩ
20 (68)	3.5	2.3 - 2.7
50 (122)	2.2	0.79 - 0.90

*: This data is reference value and is measured between ECM terminal 107 (fuel tank temperature sensor) and ground.

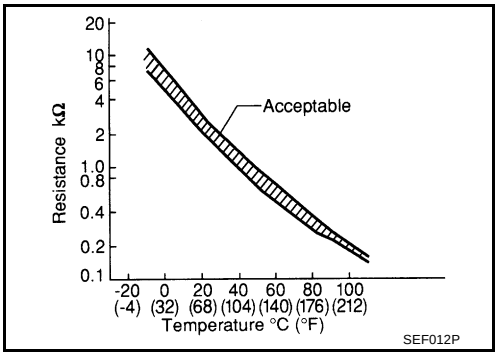

CAUTION:
Do not use ECM ground terminals when measuring input/output voltage. Doing so may result in damage to the ECM's transistor. Use a ground other than ECM terminals, such as the ground.

On Board Diagnosis Logic

ABS006P7

DTC No.	Trouble diagnosis name	DTC detecting condition	Possible cause
P0181 0181	Fuel tank temperature sensor circuit range/ performance	Rationally incorrect voltage from the sensor is sent to ECM, compared with the voltage signals from engine coolant temperature sensor and intake air temperature sensor.	● Harness or connectors (The sensor circuit is open or shorted) ● Fuel tank temperature sensor ● Unified meter and A/C amp.

DTC Confirmation Procedure

ABS006P8

NOTE:
If DTC Confirmation Procedure has been previously conducted, always turn ignition switch OFF and wait at least 10 seconds before conducting the next test.

WITH CONSULT-II

1. Turn ignition switch ON.
2. Select “DATA MONITOR” mode with CONSULT-II.
3. Wait at least 10 seconds.
   If the result is NG, go to EC-270, "Diagnostic Procedure" .
   If the result is OK, go to following step.
4. Check “COOLAN TEMP/S” value.
   If “COOLAN TEMP/S” is less than 60°C (140°F), the result will be OK.
   If “COOLAN TEMP/S” is above 60°C (140°F), go to the following step.
5. Cool engine down until “COOLAN TEMP/S” is less than 60°C (140°F).
6. Wait at least 10 seconds.
7. If 1st trip DTC is detected, go to EC-270, "Diagnostic Procedure" .

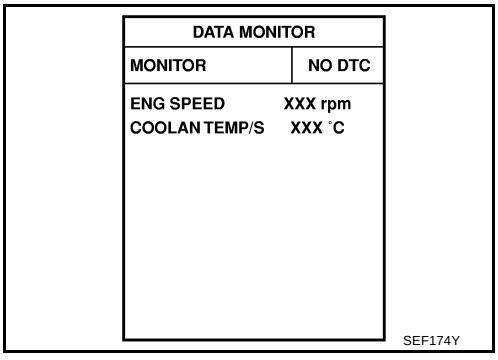

WITH GST

Follow the procedure “WITH CONSULT-II” above.

Wiring Diagram

ABS006P9

EC-FTTS-01

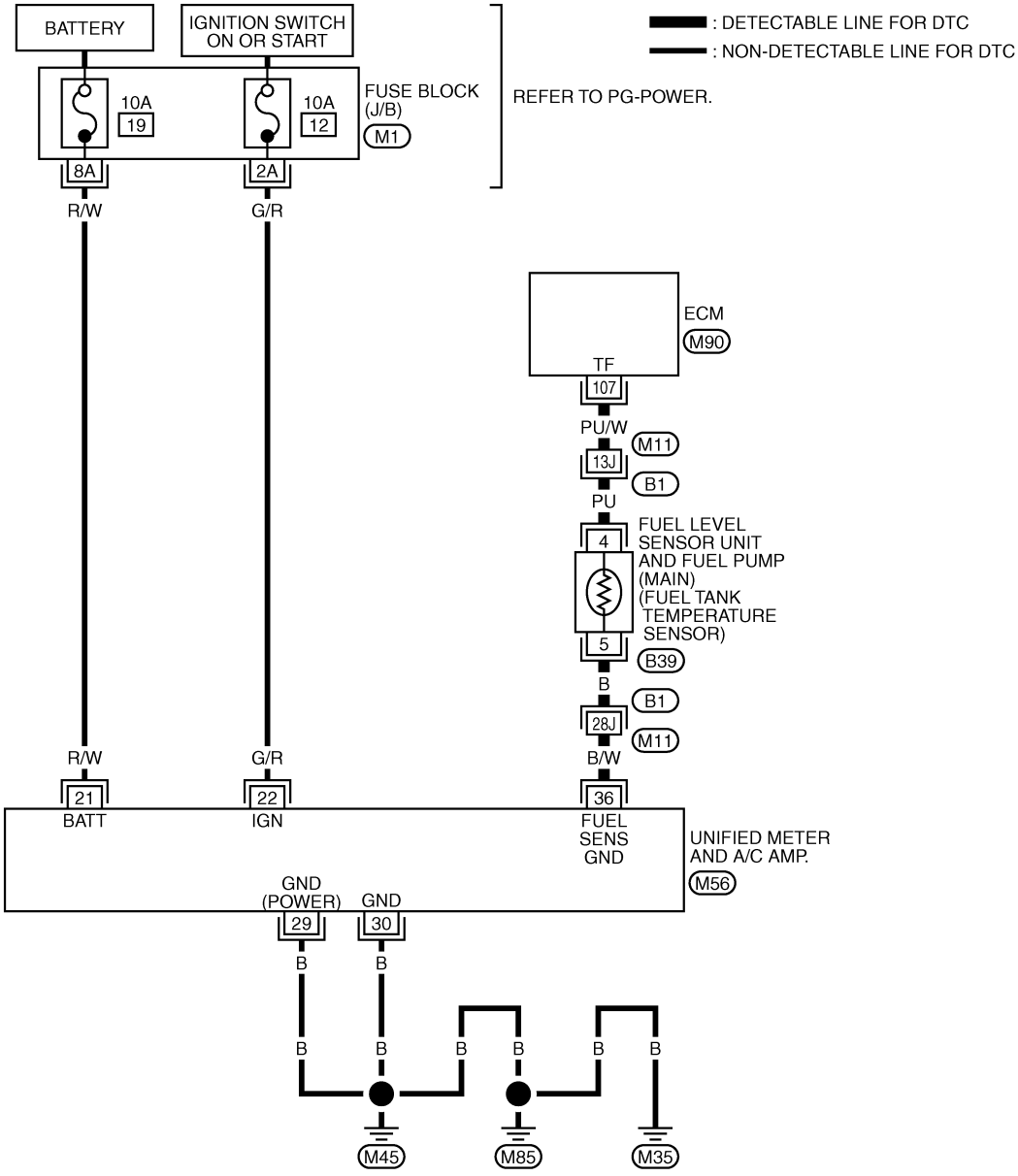

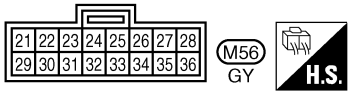

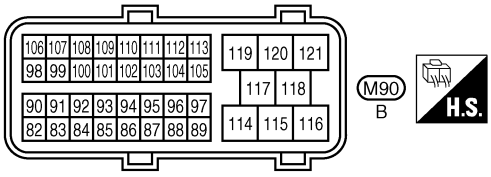

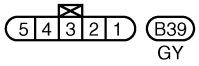

REFER TO THE FOLLOWING.
B1 -SUPER MULTIPLE JUNCTION (SMJ)
M1 -FUSE BLOCK-JUNCTION BOX (J/B)

TBWH0109E

Diagnostic Procedure

ABS006PA

1. CHECK GROUND CONNECTIONS

1. Turn ignition switch OFF.
2. Loosen and retighten ground three screws on the body. Refer to EC-170, "Ground Inspection" .

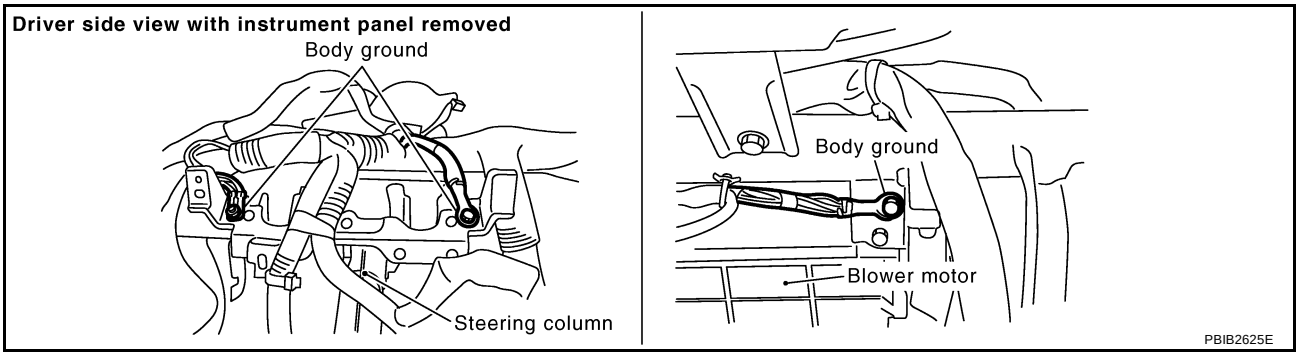

OK or NG

OK >> GO TO 2.
NG >> Repair or replace ground connections.

2. CHECK DTC WITH “UNIFIED METER AND A/C AMP.”

Refer to DI-32, "SELF-DIAGNOSTIC RESULTS" .

OK or NG

OK >> GO TO 3.
NG >> Go to DI-22, "Fuel Level Sensor Signal Inspection" .

3. CHECK FUEL TANK TEMPERATURE SENSOR POWER SUPPLY CIRCUIT

1. Turn ignition switch OFF.
2. Disconnect “fuel level sensor unit and fuel pump” harness connector.
3. Turn ignition switch ON.

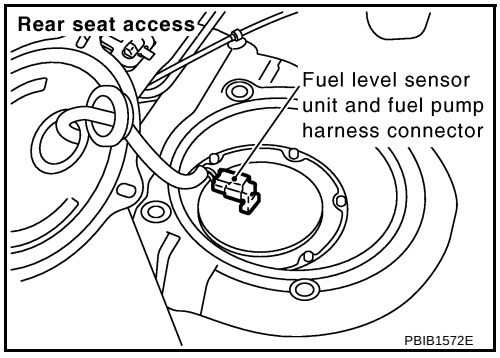

4. Check voltage between “fuel level sensor unit and fuel pump” terminal 4 and ground with CONSULT-II or tester.

   Voltage: Approximately 5V

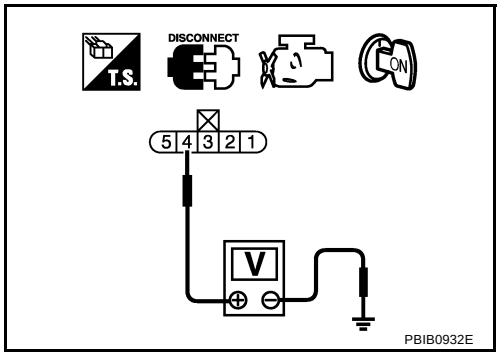

OK or NG

OK >> GO TO 5.
NG >> GO TO 4.

4. DETECT MALFUNCTIONING PART

Check the following.

- Harness connectors B1, M11
- Harness for open or short between ECM and “fuel level sensor unit and fuel pump”

>> Repair open circuit or short to ground or short to power in harness or connector.

5. CHECK FUEL TANK TEMPERATURE SENSOR GROUND CIRCUIT FOR OPEN AND SHORT

1. Turn ignition switch OFF.
2. Disconnect “unified meter and A/C amp.” harness connector.
3. Check harness continuity between “fuel level sensor unit and fuel pump” terminal 5 and “unified meter and A/C amp.” terminal 36. Refer to Wiring Diagram.

Continuity should exist.

4. Also check harness for short to ground and short to power.

OK or NG

OK >> GO TO 7.
NG >> GO TO 6.

6. DETECT MALFUNCTIONING PART

Check the following.

- Harness connectors B1, M11
- Harness for open or short between “fuel level sensor unit and fuel pump” and “unified meter and A/C amp.”

>> Repair open circuit or short to ground or short to power in harness or connector.

7. CHECK FUEL TANK TEMPERATURE SENSOR

Refer to EC-271, "Component Inspection" .

OK or NG

OK >> GO TO 8.
NG >> Replace fuel level sensor unit.

8. CHECK INTERMITTENT INCIDENT

Refer to EC-163, "TROUBLE DIAGNOSIS FOR INTERMITTENT INCIDENT" .

>> **INSPECTION END**

Component Inspection

ABS006PB

FUEL TANK TEMPERATURE SENSOR

1. Remove fuel level sensor unit.

2. Check resistance between “fuel level sensor unit and fuel pump” terminals 4 and 5 by heating with hot water or heat gun as shown in the figure.

Temperature °C (°F)	Resistance kΩ
20 (68)	2.3 - 2.7
50 (122)	0.79 - 0.90

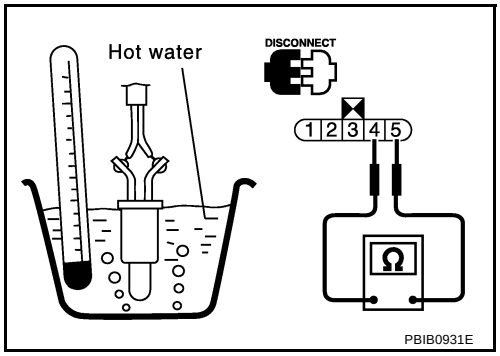

Removal and Installation

ABS006PC

FUEL TANK TEMPERATURE SENSOR

Refer to FL-4, "FUEL LEVEL SENSOR UNIT, FUEL FILTER AND FUEL PUMP ASSEMBLY" .

DTC P0182, P0183 FTT SENSOR

PFP:22630

Component Description

ABS006PD

The fuel tank temperature sensor is used to detect the fuel temperature inside the fuel tank. The sensor modifies a voltage signal from the ECM. The modified signal returns to the ECM as the fuel temperature input. The sensor uses a thermistor which is sensitive to the change in temperature. The electrical resistance of the thermistor decreases as temperature increases.

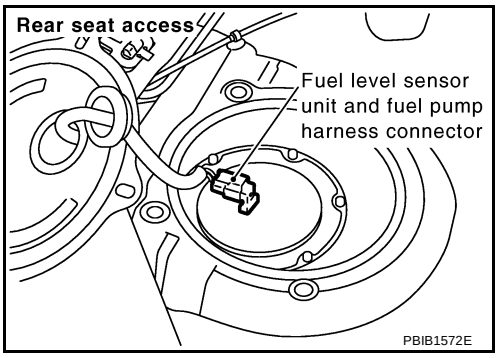

<Reference data>

Fluid temperature °C (°F)	Voltage* V	Resistance kΩ
20 (68)	3.5	2.3 - 2.7
50 (122)	2.2	0.79 - 0.90

*: This data is reference value and is measured between ECM terminal 107 (fuel tank temperature sensor) and ground.

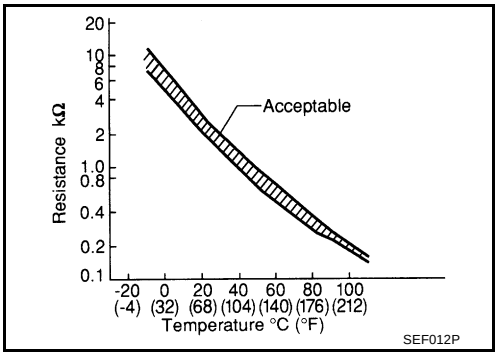

CAUTION:
Do not use ECM ground terminals when measuring input/output voltage. Doing so may result in damage to the ECM's transistor. Use a ground other than ECM terminals, such as the ground.

On Board Diagnosis Logic

ABS006PE

DTC No.	Trouble diagnosis name	DTC detecting condition	Possible cause
P0182 0182	Fuel tank temperature sensor circuit low input	An excessively low voltage from the sensor is sent to ECM.	● Harness or connectors (The sensor circuit is open or shorted.) ● Fuel tank temperature sensor ● Unified meter and A/C amp.
P0183 0183	Fuel tank temperature sensor circuit high input	An excessively high voltage from the sensor is sent to ECM.	

DTC Confirmation Procedure

ABS006PF

NOTE:
If DTC Confirmation Procedure has been previously conducted, always turn ignition switch OFF and wait at least 10 seconds before conducting the next test.

WITH CONSULT-II

1. Turn ignition switch ON.
2. Select “DATA MONITOR” mode with CONSULT-II.
3. Wait at least 5 seconds.
4. If 1st trip DTC is detected, go to EC-275, "Diagnostic Procedure"
.

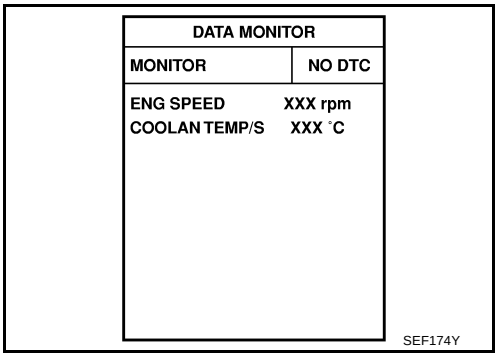

WITH GST

Follow the procedure “WITH CONSULT-II” above.

Wiring Diagram

ABS006PG

EC-FTTS-01

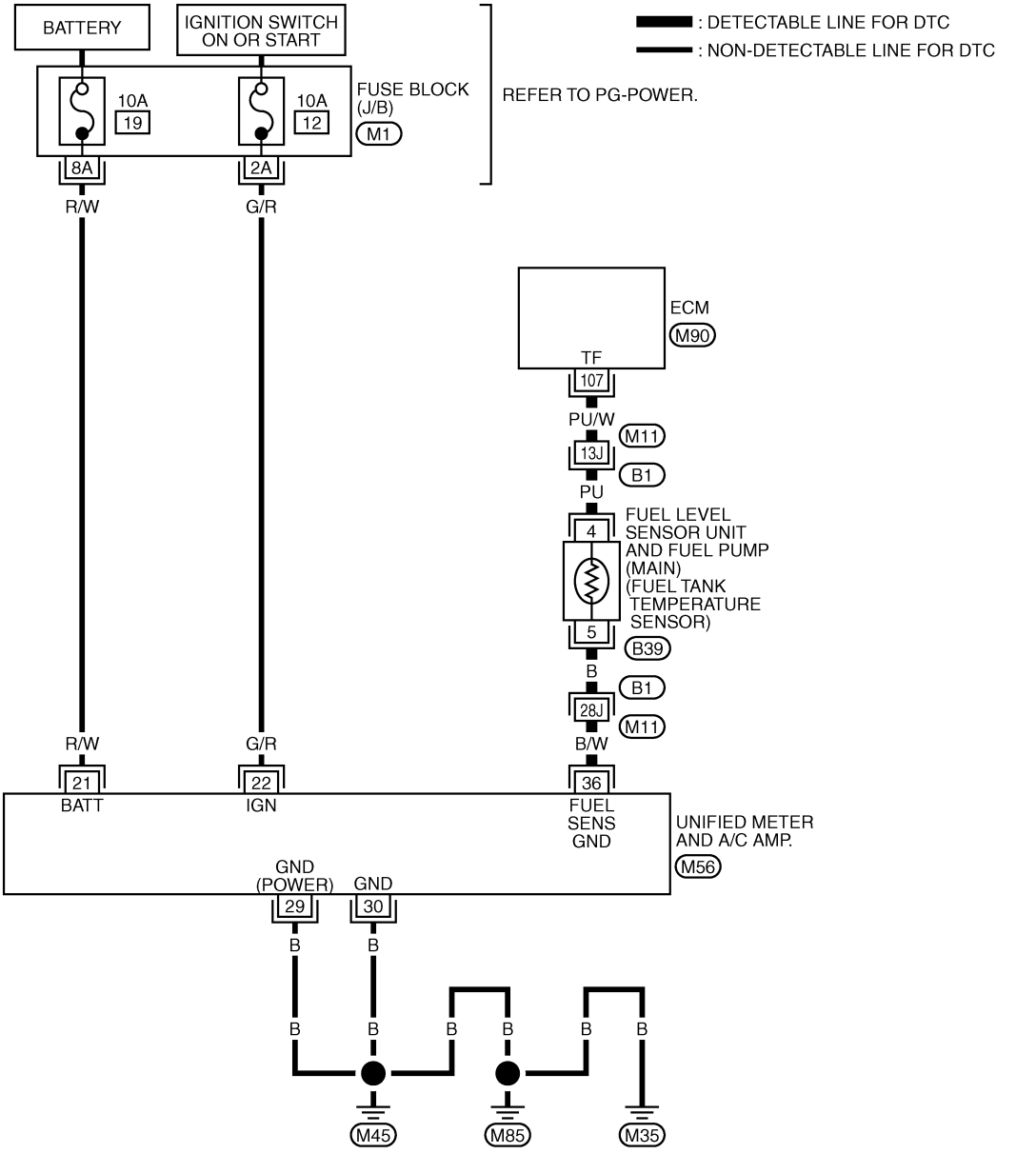

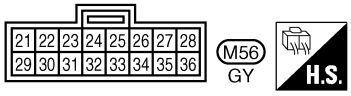

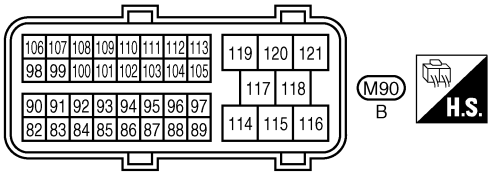

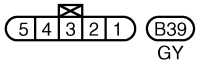

REFER TO THE FOLLOWING.

B1 -SUPER MULTIPLE JUNCTION (SMJ)

M1 -FUSE BLOCK-JUNCTION BOX (J/B)

TBWH0109E

Diagnostic Procedure

ABS006PH

1. CHECK GROUND CONNECTIONS

1. Turn ignition switch OFF.
2. Loosen and retighten ground three screws on the body. Refer to EC-170, "Ground Inspection" .

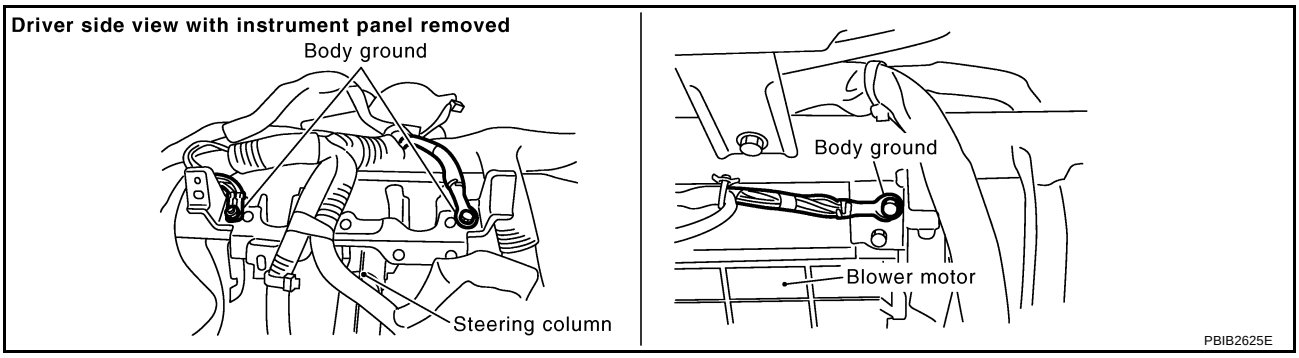

OK or NG

OK >> GO TO 2.
NG >> Repair or replace ground connections.

2. CHECK DTC WITH “UNIFIED METER AND A/C AMP.”

Refer to DI-32, "SELF-DIAGNOSTIC RESULTS" .

OK or NG

OK >> GO TO 3.
NG >> Go to DI-22, "Fuel Level Sensor Signal Inspection" .

3. CHECK FUEL TANK TEMPERATURE SENSOR POWER SUPPLY CIRCUIT

1. Turn ignition switch OFF.
2. Disconnect “fuel level sensor unit and fuel pump” harness connector.
3. Turn ignition switch ON.

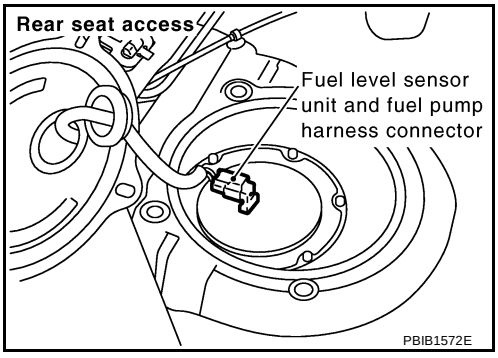

4. Check voltage between “fuel level sensor unit and fuel pump” terminal 4 and ground with CONSULT-II or tester.

Voltage: Approximately 5V

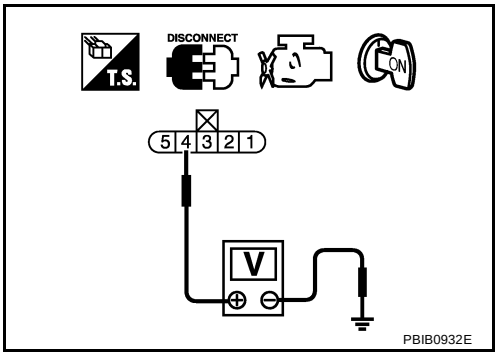

OK or NG

OK >> GO TO 5.
NG >> GO TO 4.

4. DETECT MALFUNCTIONING PART

Check the following.

- Harness connectors B1, M11
- Harness for open or short between ECM and “fuel level sensor unit and fuel pump”

>> Repair open circuit or short to ground or short to power in harness or connector.

5. CHECK FUEL TANK TEMPERATURE SENSOR GROUND CIRCUIT FOR OPEN AND SHORT

1. Turn ignition switch OFF.
2. Disconnect “unified meter and A/C amp.” harness connector.
3. Check harness continuity between “fuel level sensor unit and fuel pump” terminal 5 and “unified meter and A/C amp.” terminal 36. Refer to Wiring Diagram.

Continuity should exist.

4. Also check harness for short to ground and short to power.

OK or NG

OK >> GO TO 7.
NG >> GO TO 6.

6. DETECT MALFUNCTIONING PART

Check the following.

- Harness connectors B1, M11
- Harness for open or short between “fuel level sensor unit and fuel pump” and “unified meter and A/C amp.”

>> Repair open circuit or short to ground or short to power in harness or connector.

7. CHECK FUEL TANK TEMPERATURE SENSOR

Refer to EC-276, "Component Inspection" .

OK or NG

OK >> GO TO 8.
NG >> Replace fuel level sensor unit.

8. CHECK INTERMITTENT INCIDENT

Refer to EC-163, "TROUBLE DIAGNOSIS FOR INTERMITTENT INCIDENT" .

>> **INSPECTION END**

Component Inspection

ABS006PI

FUEL TANK TEMPERATURE SENSOR

1. Remove fuel level sensor unit.

2. Check resistance between “fuel level sensor unit and fuel pump” terminals 4 and 5 by heating with hot water or heat gun as shown in the figure.

Temperature °C (°F)	Resistance kΩ
20 (68)	2.3 - 2.7
50 (122)	0.79 - 0.90

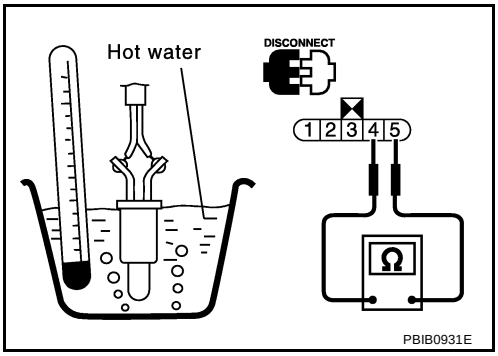

ABS006PJ

Removal and Installation
FUEL TANK TEMPERATURE SENSOR

Refer to FL-4, "FUEL LEVEL SENSOR UNIT, FUEL FILTER AND FUEL PUMP ASSEMBLY" .

DTC P0222, P0223 TP SENSOR

PFP:16119

Component Description

ABS006PK

Electric throttle control actuator consists of throttle control motor, throttle position sensor, etc. The throttle position sensor responds to the throttle valve movement.
The throttle position sensor has two sensors. These sensors are a kind of potentiometers which transform the throttle valve position into output voltage, and emit the voltage signal to the ECM. In addition, these sensors detect the opening and closing speed of the throttle valve and feed the voltage signals to the ECM. The ECM judges the current opening angle of the throttle valve from these signals and the ECM controls the throttle control motor to make the throttle valve opening angle properly in response to driving condition.

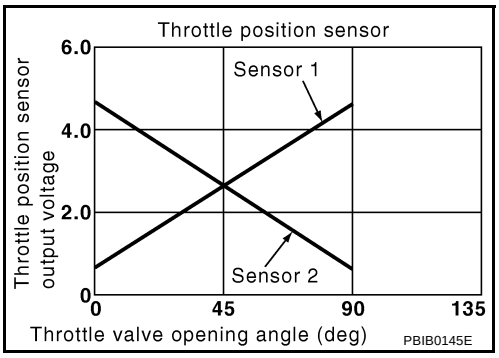

CONSULT-II Reference Value in Data Monitor Mode

ABS006PL

Specification data are reference values.

MONITOR ITEM	CONDITION		SPECIFICATION
THRTL SEN 1 THRTL SEN 2*	● Ignition switch: ON (Engine stopped) ● Selector lever: D	Accelerator pedal: Fully released	More than 0.36V
		Accelerator pedal: Fully depressed	Less than 4.75V

*: Throttle position sensor 2 signal is converted by ECM internally. Thus, it differs from ECM terminal voltage signal.

On Board Diagnosis Logic

ABS006PM

These self-diagnoses have the one trip detection logic.

DTC No.	Trouble diagnosis name	DTC detecting condition	Possible cause
P0222 0222	Throttle position sensor 1 circuit low input	An excessively low voltage from the TP sensor 1 is sent to ECM.	● Harness or connectors (TP sensor 1 circuit is open or shorted.) (APP sensor 2 circuit is shorted.) ● Electric throttle control actuator (TP sensor 1) ● Accelerator pedal position sensor. (APP sensor 2)
P0223 0223	Throttle position sensor 1 circuit high input	An excessively high voltage from the TP sensor 1 is sent to ECM.	

FAIL-SAFE MODE

When the malfunction is detected, ECM enters fail-safe mode and the MIL lights up.

Engine operation condition in fail-safe mode
The ECM controls the electric throttle control actuator in regulating the throttle opening in order for the idle position to be within +10 degrees. The ECM regulates the opening speed of the throttle valve to be slower than the normal condition. So, the acceleration will be poor.

DTC Confirmation Procedure

ABS006PN

NOTE:
If DTC Confirmation Procedure has been previously conducted, always turn ignition switch OFF and wait at least 10 seconds before conducting the next test.
TESTING CONDITION:
Before performing the following procedure, confirm that battery voltage is more than 10V at idle.

WITH CONSULT-II

1. Turn ignition switch ON.
2. Select “DATA MONITOR” mode with CONSULT-II.
3. Start engine and let it idle for 1 second.
4. If DTC is detected, go to EC-281, "Diagnostic Procedure" .

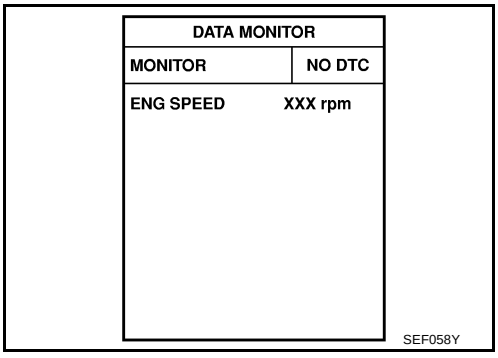

WITH GST

Follow the procedure “WITH CONSULT-II” above.

Wiring Diagram

ABS006PO

EC-TPS1-01

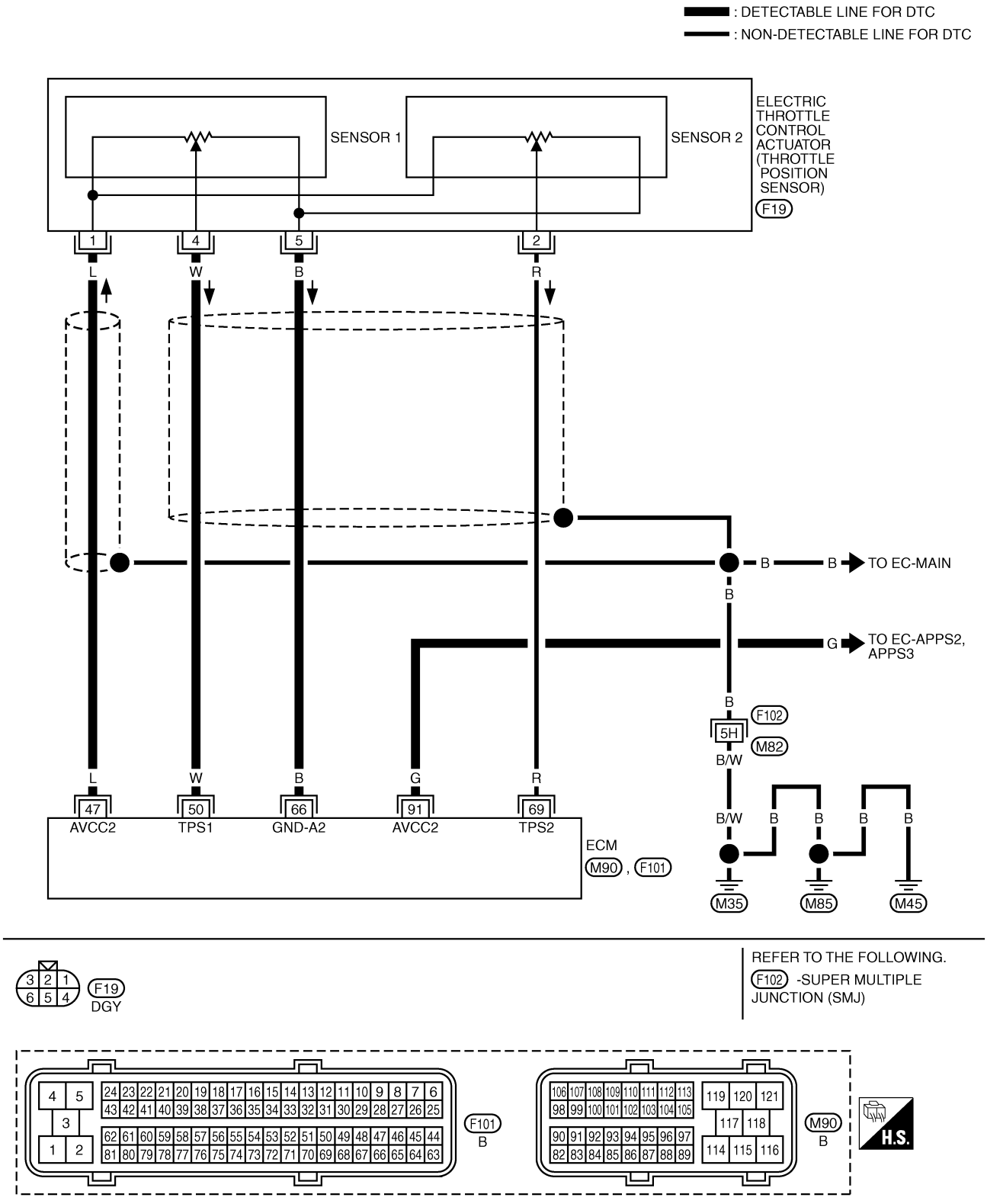

TBWM0394E

Specification data are reference values and are measured between each terminal and ground.

CAUTION:
Do not use ECM ground terminals when measuring input/output voltage. Doing so may result in damage to the ECM's transistor. Use a ground other than ECM terminals, such as the ground.

TERMINAL NO.	WIRE COLOR	ITEM	CONDITION	DATA (DC Voltage)
47	L	Sensor power supply (Throttle position sensor)	**[Ignition switch: ON]**	Approximately 5V
50	W	Throttle position sensor 1	**[Ignition switch: ON]** ● Engine stopped ● Selector lever: D ● Accelerator pedal: Fully released	More than 0.36V
			[Ignition switch: ON] ● Engine stopped ● Selector lever: D ● Accelerator pedal: Fully depressed	Less than 4.75V
66	B	Sensor ground (Throttle position sensor)	**[Engine is running]** ● **Warm-up condition** ● Idle speed	Approximately 0V
69	R	Throttle position sensor 2	**[Ignition switch: ON]** ● Engine stopped ● Selector lever: D ● Accelerator pedal: Fully released	Less than 4.75V
			[Ignition switch: ON] ● Engine stopped ● Selector lever: D ● Accelerator pedal: Fully depressed	More than 0.36V
91	G	Sensor power supply (APP sensor 2)	**[Ignition switch: ON]**	Approximately 5V

Diagnostic Procedure

ABS006PP

1. CHECK GROUND CONNECTIONS

1. Turn ignition switch OFF.
2. Loosen and retighten ground three screws on the body. Refer to EC-170, "Ground Inspection" .

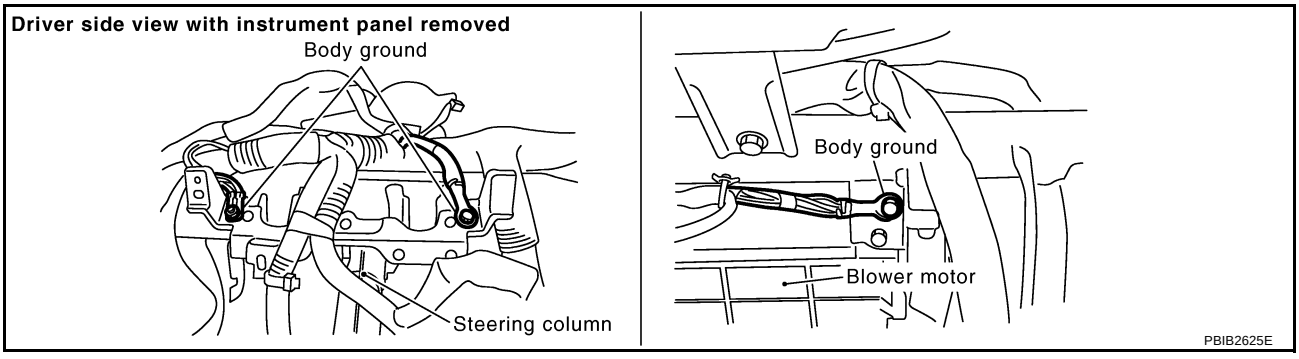

OK or NG

OK >> GO TO 2.
NG >> Repair or replace ground connections.

2. CHECK THROTTLE POSITION SENSOR 1 POWER SUPPLY CIRCUIT-I

1. Disconnect electric throttle control actuator harness connector.
2. Turn ignition switch ON.

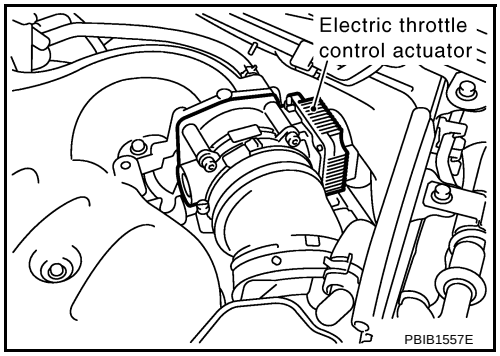

3. Check voltage between electric throttle control actuator terminal 1 and ground with CONSULT-II or tester.

Voltage: Approximately 5V

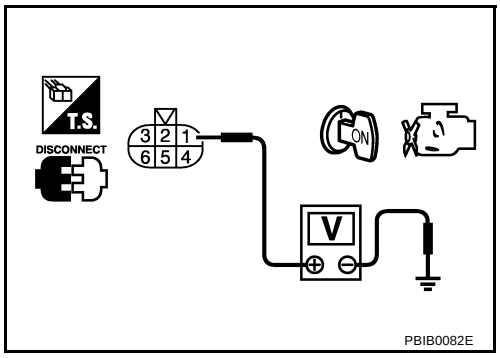

OK or NG

OK >> GO TO 7.
NG >> GO TO 3.

3. CHECK THROTTLE POSITION SENSOR 1 POWER SUPPLY CIRCUIT-II

1. Turn ignition switch OFF.
2. Disconnect ECM harness connector.
3. Check harness continuity between electric throttle control actuator terminal 1 and ECM terminal 47. Refer to Wiring Diagram.

Continuity should exist.

OK or NG

OK >> GO TO 4.
NG >> Repair or replace open circuit.

4. CHECK THROTTLE POSITION SENSOR 1 POWER SUPPLY CIRCUIT-III

Check the following.

- Harness for short to power and short to ground, between the following terminals.

ECM terminal	Sensor terminal	Reference Wiring Diagram
47	Electric throttle control actuator terminal 1	EC-280
91	APP sensor terminal 4	EC-628

OK or NG

OK >> GO TO 5.
NG >> Repair short to ground or short to power in harness or connectors.

5. CHECK APP SENSOR

Refer to EC-624, "Component Inspection" .

OK or NG

OK >> GO TO 11.
NG >> GO TO 6.

6. REPLACE ACCELERATOR PEDAL ASSEMBLY

1. Replace accelerator pedal assembly.
2. Perform EC-96, "Accelerator Pedal Released Position Learning" .
3. Perform EC-96, "Throttle Valve Closed Position Learning" .
4. Perform EC-97, "Idle Air Volume Learning" .

>> **INSPECTION END**

7. CHECK THROTTLE POSITION SENSOR 1 GROUND CIRCUIT FOR OPEN AND SHORT

1. Turn ignition switch OFF.
2. Disconnect ECM harness connector.
3. Check harness continuity between electric throttle control actuator terminal 5 and ECM terminal 66. Refer to Wiring Diagram.

Continuity should exist.

4. Also check harness for short to ground and short to power.

OK or NG

OK >> GO TO 8.
NG >> Repair open circuit or short to ground or short to power in harness or connectors.

8. CHECK THROTTLE POSITION SENSOR 1 INPUT SIGNAL CIRCUIT FOR OPEN AND SHORT

1. Check harness continuity between ECM terminal 50 and electric throttle control actuator terminal 4. Refer to Wiring Diagram.

Continuity should exist.

2. Also check harness for short to ground and short to power.

OK or NG

OK >> GO TO 9.
NG >> Repair open circuit or short to ground or short to power in harness or connectors.

9. CHECK THROTTLE POSITION SENSOR

Refer to EC-284, "Component Inspection" .

OK or NG

OK >> GO TO 11.
NG >> GO TO 10.

10. REPLACE ELECTRIC THROTTLE CONTROL ACTUATOR

1. Replace the electric throttle control actuator.
2. Perform EC-96, "Throttle Valve Closed Position Learning" .
3. Perform EC-97, "Idle Air Volume Learning" .

>> **INSPECTION END**

11. CHECK INTERMITTENT INCIDENT

Refer to EC-163, "TROUBLE DIAGNOSIS FOR INTERMITTENT INCIDENT" .

>> **INSPECTION END**

Component Inspection

ABS006PQ

THROTTLE POSITION SENSOR

1. Reconnect all harness connectors disconnected.
2. Perform EC-96, "Throttle Valve Closed Position Learning" .
3. Turn ignition switch ON.
4. Set selector lever to D position.
5. Check voltage between ECM terminals 50 (TP sensor 1 signal), 69 (TP sensor 2 signal) and body ground under the following conditions.

Terminal	Accelerator pedal	Voltage
50 (Throttle position sensor 1)	Fully released	More than 0.36V
	Fully depressed	Less than 4.75V
69 (Throttle position sensor 2)	Fully released	Less than 4.75V
	Fully depressed	More than 0.36V

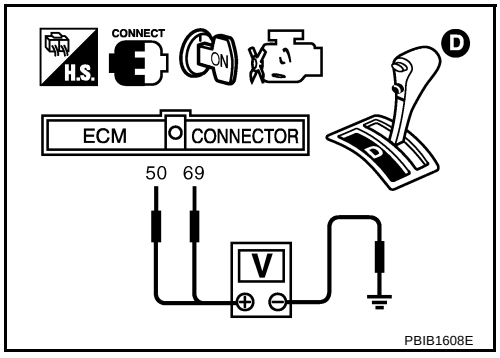

6. If NG, replace electric throttle control actuator and go to the next step.
7. Perform EC-96, "Throttle Valve Closed Position Learning" .
8. Perform EC-97, "Idle Air Volume Learning" .

Removal and Installation

ABS006PR

ELECTRIC THROTTLE CONTROL ACTUATOR

Refer to EM-178, "INTAKE MANIFOLD" .

DTC P0300 - P0306 MULTIPLE CYLINDER MISFIRE, NO. 1 - 6 CYLINDER MISFIRE

PFP:00000

On Board Diagnosis Logic

ABS006PS

When a misfire occurs, engine speed will fluctuate. If the engine speed fluctuates enough to cause the crankshaft position (CKP) sensor (POS) signal to vary, ECM can determine that a misfire is occurring.

Sensor	Input Signal to ECM	ECM function
Crankshaft position sensor (POS)	Engine speed	On board diagnosis of misfire

The misfire detection logic consists of the following two conditions.

1. One Trip Detection Logic (Three Way Catalyst Damage)
   On the 1st trip that a misfire condition occurs that can damage the three way catalyst (TWC) due to overheating, the MIL will blink.
   When a misfire condition occurs, the ECM monitors the CKP sensor signal every 200 engine revolutions for a change.
   When the misfire condition decreases to a level that will not damage the TWC, the MIL will turn off.
   If another misfire condition occurs that can damage the TWC on a second trip, the MIL will blink.
   When the misfire condition decreases to a level that will not damage the TWC, the MIL will remain on.
   If another misfire condition occurs that can damage the TWC, the MIL will begin to blink again.
2. Two Trip Detection Logic (Exhaust quality deterioration)
   For misfire conditions that will not damage the TWC (but will affect vehicle emissions), the MIL will only light when the misfire is detected on a second trip. During this condition, the ECM monitors the CKP sensor signal every 1,000 engine revolutions.
   A misfire malfunction can be detected on any one cylinder or on multiple cylinders.

DTC No.	Trouble diagnosis name	DTC detecting condition	Possible cause
P0300 0300	Multiple cylinder misfire detected	Multiple cylinder misfire.	● Improper spark plug ● Insufficient compression ● Incorrect fuel pressure ● The injector circuit is open or shorted ● Fuel injector ● Intake air leak ● The ignition signal circuit is open or shorted ● Lack of fuel ● Signal plate ● Air fuel ratio (A/F) sensor 1 ● Incorrect PCV hose connection
P0301 0301	No.1 cylinder misfire detected	No. 1 cylinder misfires.	
P0302 0302	No. 2 cylinder misfire detected	No. 2 cylinder misfires.	
P0303 0303	No. 3 cylinder misfire detected	No. 3 cylinder misfires.	
P0304 0304	No. 4 cylinder misfire detected	No. 4 cylinder misfires.	
P0305 0305	No. 5 cylinder misfire detected	No. 5 cylinder misfires.	
P0306 0306	No. 6 cylinder misfire detected	No. 6 cylinder misfires.	

DTC Confirmation Procedure

ABS0095P

CAUTION:
Always drive vehicle in safe manner according to traffic conditions and obey all traffic laws when driving.

NOTE:
If DTC Confirmation Procedure has been previously conducted, always turn ignition switch OFF and wait at least 10 seconds before conducting the next test.

WITH CONSULT-II

1. Turn ignition switch ON, and select “DATA MONITOR” mode with CONSULT-II.
2. Start engine and warm it up to normal operating temperature.
3. Turn ignition switch OFF and wait at least 10 seconds.
4. Restart engine and let it idle for about 15 minutes.
5. If 1st trip DTC is detected, go to EC-286, "Diagnostic Procedure".

DATA MONITOR	
MONITOR	NO DTC
ENG SPEED	XXX rpm
COOLAN TEMP/S	XXX °C
VHCL SPEED SE	XXX km/h
B/FUEL SCHDL	XXX msec

PBIB0164E

NOTE:
If 1st trip DTC is not detected during above procedure, performing the following procedure is advised.

1. Turn ignition switch OFF and wait at least 10 seconds.
2. Start engine and drive the vehicle under the similar conditions to (1st trip) Freeze Frame Data for a certain time. Refer to table below.

Hold the accelerator pedal as steady as possible.

The similar conditions to (1st trip) Freeze Frame Data means the vehicle operation that the following conditions should be satisfied at the same time.

Engine speed	Engine speed in the freeze frame data ± 400 rpm
Vehicle speed	Vehicle speed in the freeze frame data ± 10 km/h (6 MPH)
Engine coolant temperature (T) condition	When the freeze frame data shows lower than 70 °C (158 °F), T should be lower than 70 °C (158 °F).
	When the freeze frame data shows higher than or equal to 70 °C (158 °F), T should be higher than or equal to 70 °C (158 °F).

The time to driving varies according to the engine speed in the freeze frame data.
Refer to the following table.

Engine speed	Time
Around 1,000 rpm	Approximately 10 minutes
Around 2,000 rpm	Approximately 5 minutes
More than 3,000 rpm	Approximately 3.5 minutes

WITH GST

Follow the procedure “WITH CONSULT-II” above.

Diagnostic Procedure

ABS006PU

1. CHECK FOR INTAKE AIR LEAK AND PCV HOSE

1. Start engine and run it at idle speed.
2. Listen for the sound of the intake air leak.
3. Check PCV hose connection.

OK or NG

OK >> GO TO 2.
NG >> Discover air leak location and repair.

2. CHECK FOR EXHAUST SYSTEM CLOGGING

Stop engine and visually check exhaust tube, three way catalyst and muffler for dents.

OK or NG

OK (With CONSULT-II)>>GO TO 3.
OK (Without CONSULT-II)>>GO TO 4.
NG >> Repair or replace it.

3. PERFORM POWER BALANCE TEST

With CONSULT-II

1. Perform “POWER BALANCE” in “ACTIVE TEST” mode.
2. Is there any cylinder which does not produce a momentary engine speed drop?

ACTIVE TEST	
POWER BALANCE	
MONITOR	
ENG SPEED	XXX rpm
MAS A/F SE-B1	XXX V

PBIB0133E

Yes or No

Yes >> GO TO 4.
No >> GO TO 10.

4. CHECK FUNCTION OF INJECTOR-I

Without CONSULT-II

1. Stop engine.
2. Disconnect harness connectors F50, F251
3. Turn ignition switch ON.

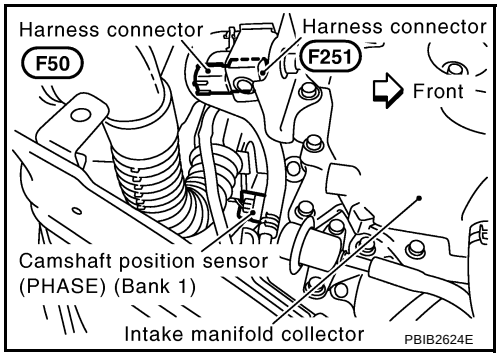

4. Check voltage between harness connector F50 terminal 5 and ground with CONSULT-II or tester.

   Voltage: Battery voltage

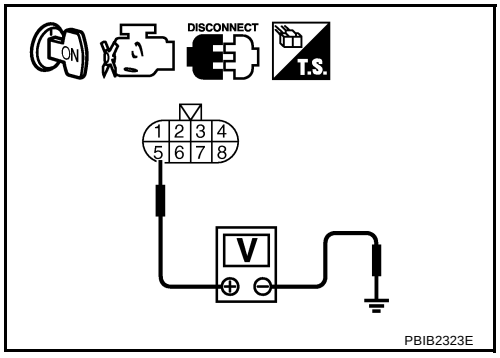

5. Turn ignition switch OFF.
6. Disconnect ECM harness connector.
7. Check harness continuity between harness connector F50 and ECM as follows.
   Refer to Wiring Diagram.

Cylinder	Harness connector F50 terminal	ECM terminal
1	6	23
2	4	42
3	2	22
4	3	41
5	1	21
6	7	40

   Continuity should exist.

8. Also check harness for short to ground and short to power.

OK or NG

OK >> GO TO 5.
NG >> Perform trouble diagnosis for INJECTOR CIRCUIT, refer to EC-661, "INJECTOR CIRCUIT" .

5. CHECK FUNCTION OF INJECTOR-II

Provide battery voltage between harness connector F251 as follows and then interrupt it. Listen to each injector operating sound.

Cylinder	Harness connector F251 terminal	
	(+)	(–)
1	5	6
2	5	4
3	5	2
4	5	3
5	5	1
6	5	7

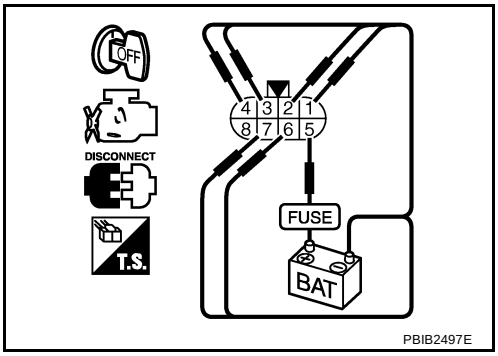

Operating sound should exist.

OK or NG

OK >> GO TO 6.

NG >> Perform trouble diagnosis for INJECTOR CIRCUIT, refer to EC-661, "INJECTOR CIRCUIT" .

6. CHECK FUNCTION OF IGNITION COIL-I

CAUTION:
Do the following procedure in the place where ventilation is good without the combustible.

1. Turn ignition switch OFF.
2. Reconnect all harness connectors disconnected.
3. Remove fuel pump fuse in IPDM E/R to release fuel pressure.

   NOTE:
   Do not use CONSULT-II to release fuel pressure, or fuel pressure applies again during the following procedure.
4. Start engine.
5. After engine stalls, crank it 2 or 3 times to release all fuel pressure.
6. Turn ignition switch OFF.
7. Remove all ignition coil harness connectors to avoid the electrical discharge from the ignition coils.
8. Remove ignition coil and spark plug of the cylinder to be checked.

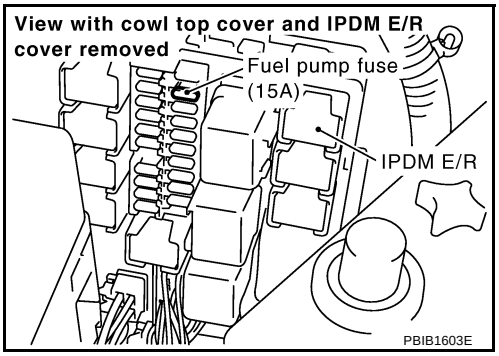

9. Crank engine for 5 seconds or more to remove combustion gas in the cylinder.
10. Connect spark plug and harness connector to ignition coil.
11. Fix ignition coil using a rope etc. with gap of 13 - 17 mm between the edge of the spark plug and grounded metal portion as shown in the figure.
12. Crank engine for about three seconds, and check whether spark is generated between the spark plug and the grounded metal portion.

    Spark should be generated.

    CAUTION:
    - **Do not approach to the spark plug and the ignition coil within 50cm. Be careful not to get an electrical shock while checking, because the electrical discharge voltage becomes 20kV or more.**
    - **It might cause to damage the ignition coil if the gap of 17 mm or more is taken.**

    NOTE:
    When the gap is 13 mm or less, the spark might be generated even if the coil is malfunctioning.

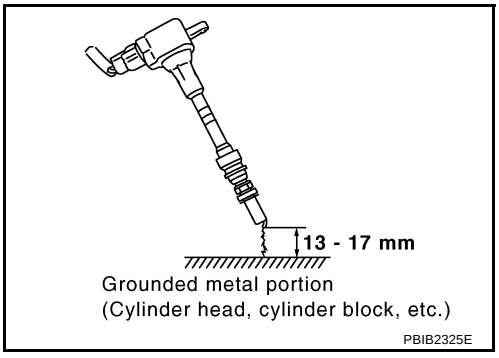

OK or NG

OK >> GO TO 10.
NG >> GO TO 7.

7. CHECK FUNCTION OF IGNITION COIL-II

1. Turn ignition switch OFF.
2. Disconnect spark plug and connect a known-good spark plug.
3. Crank engine for about 3 seconds, and recheck whether spark is generated between the spark plug and the grounded metal portion.

   Spark should be generated.

OK or NG

OK >> GO TO 8.
NG >> Check ignition coil, power transistor and their circuits. Refer to EC-648, "IGNITION SIGNAL" .

8. CHECK SPARK PLUG

Check the initial spark plug for fouling, etc.

OK or NG

OK >> Replace spark plug(s) with standard type one(s). For spark plug type, refer to MA-20, "Changing Spark Plugs (Platinum-Tipped Type)" .

NG >> 1. Repair or clean spark plug.
2. GO TO 9.

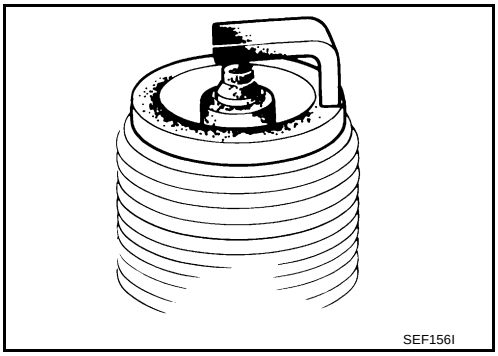

9. CHECK FUNCTION OF IGNITION COIL-III

1. Reconnect the initial spark plugs.
2. Crank engine for about 3 seconds, and recheck whether spark is generated between the spark plug and the grounded portion.

Spark should be generated.

OK or NG

OK >> **INSPECTION END**

NG >> Replace spark plug(s) with standard type one(s). For spark plug type, refer to MA-20, "Changing Spark Plugs (Platinum-Tipped Type)" .

10. CHECK COMPRESSION PRESSURE

Check compression pressure. Refer to EM-100, "CHECKING COMPRESSION PRESSURE" .

Standard:	**1,275 kPa (13.0 kg/cm^2 , 185 psi)/300 rpm**
Minimum:	**981 kPa (10.0 kg/cm^2 , 142 psi)/300 rpm**
Difference between each cylinder:	**98 kPa (1.0 kg/cm^2 , 14 psi)/300 rpm**

OK or NG

OK >> GO TO 11.

NG >> Check pistons, piston rings, valves, valve seats and cylinder head gaskets.

11. CHECK FUEL PRESSURE

1. Install all removed parts.
2. Release fuel pressure to zero. Refer to EC-99, "FUEL PRESSURE RELEASE" .
3. Install fuel pressure gauge and check fuel pressure. Refer to EC-99, "FUEL PRESSURE CHECK" .

At idle: Approximately 350 kPa (3.57 kg/cm^2 , 51 psi)

OK or NG

OK >> GO TO 13.

NG >> GO TO 12.

12. DETECT MALFUNCTIONING PART

Check the following.

- Fuel pump and circuit (Refer to EC-668, "FUEL PUMP CIRCUIT" .)
- Fuel pressure regulator (Refer to EC-99, "FUEL PRESSURE CHECK" .)
- Fuel lines (Refer to MA-17, "Checking Fuel Lines" .)
- Fuel filter for clogging

>> Repair or replace.

13. CHECK IGNITION TIMING

Check the following items. Refer to EC-78, "Basic Inspection" .

Items	Specifications
Target idle speed	650 ± 50 rpm (in P or N position)
Ignition timing	15 ± 5° BTDC (in P or N position)

OK or NG

OK >> GO TO 14.
NG >> Follow the EC-78, "Basic Inspection" .

14. CHECK A/F SENSOR 1 INPUT SIGNAL

1. Turn ignition switch OFF.
2. Disconnect A/F sensor 1 harness connector.

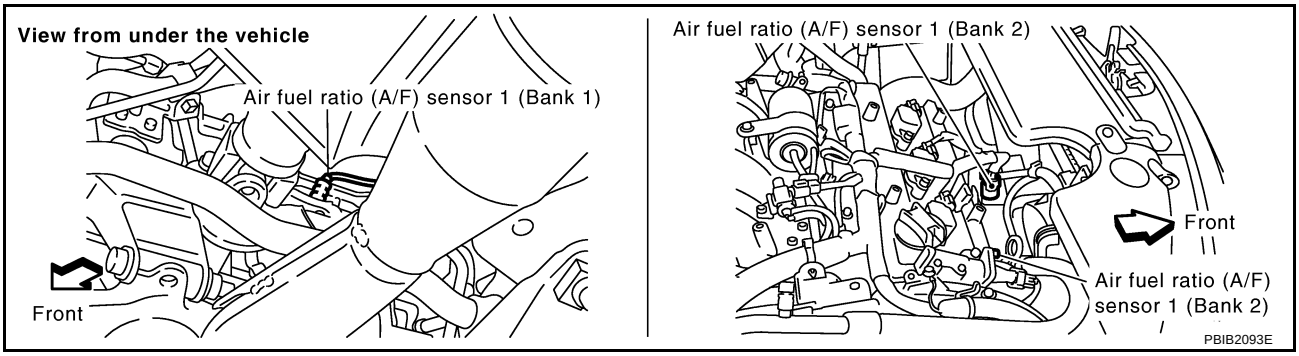

3. Disconnect ECM harness connector.
4. Check harness continuity between the following terminals.
   Refer to Wiring Diagram.

	A/F sensor 1 terminal	ECM terminal
Bank 1	1	16
	2	75
	5	35
	6	56
Bank 2	1	76
	2	77
	5	57
	6	58

Continuity should exist.

5. Check harness continuity between the following terminals and ground.
   Refer to Wiring Diagram.

Bank 1		Bank 2	
A/F sensor 1 terminal	ECM terminal	A/F sensor 1 terminal	ECM terminal
1	16	1	76
2	75	2	77
5	35	5	57
6	56	6	58

Continuity should not exist.

6. Also check harness for short to power or short to ground.

OK or NG

OK >> GO TO 15.
NG >> Repair open circuit or short to ground or short to power in harness or connectors.

15. CHECK A/F SENSOR 1 HEATER

Refer to EC-412, "Component Inspection" .

OK or NG

OK >> GO TO 16.
NG >> Replace (malfunctioning) A/F sensor 1.

16. CHECK MASS AIR FLOW SENSOR

With CONSULT-II
Check mass air flow sensor signal in “DATA MONITOR” mode with CONSULT-II.

2.0 - 6.0 g·m/sec:	**at idling**
7.0 - 20.0 g·m/sec:	**at 2,500 rpm**

With GST
Check mass air flow sensor signal in Service $01 with GST.

2.0 - 6.0 g·m/sec:	**at idling**
7.0 - 20.0 g·m/sec:	**at 2,500 rpm**

OK or NG

OK >> GO TO 17.
NG >> Check connectors for rusted terminals or loose connections in the mass air flow sensor circuit or ground. Refer to EC-186, "DTC P0101 MAF SENSOR" .

17. CHECK SYMPTOM MATRIX CHART

Check items on the rough idle symptom in EC-110, "Symptom Matrix Chart" .

OK or NG

OK >> GO TO 18.
NG >> Repair or replace.

18. ERASE THE 1ST TRIP DTC

Some tests may cause a 1st trip DTC to be set.
Erase the 1st trip DTC from the ECM memory after performing the tests. Refer to EC-68, "HOW TO ERASE EMISSION-RELATED DIAGNOSTIC INFORMATION" .

>> GO TO 19.

19. CHECK INTERMITTENT INCIDENT

Refer to EC-163, "TROUBLE DIAGNOSIS FOR INTERMITTENT INCIDENT" .

>> **INSPECTION END**

DTC P0327, P0328 KS

PFP:22060

Component Description

ABS006PV

The knock sensor is attached to the cylinder block. It senses engine knocking using a piezoelectric element. A knocking vibration from the cylinder block is sensed as vibrational pressure. This pressure is converted into a voltage signal and sent to the ECM.

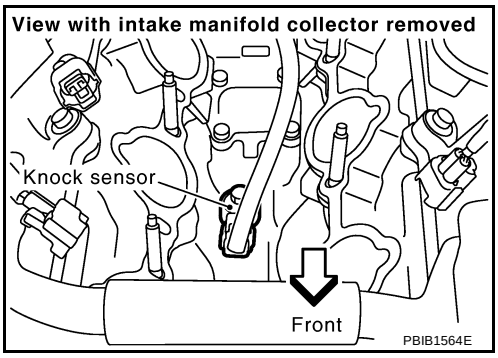

On Board Diagnosis Logic

ABS006PW

The MIL will not light up for these diagnoses.

DTC No.	Trouble diagnosis name	DTC detected condition	Possible cause
P0327 0327	Knock sensor circuit low input	An excessively low voltage from the sensor is sent to ECM.	● Harness or connectors (The sensor circuit is open or shorted.) ● Knock sensor
P0328 0328	Knock sensor circuit high input	An excessively high voltage from the sensor is sent to ECM.	

DTC Confirmation Procedure

ABS006PX

NOTE:
If DTC Confirmation Procedure has been previously conducted, always turn ignition switch OFF and wait at least 10 seconds before conducting the next test.
TESTING CONDITION:
Before performing the following procedure, confirm that battery voltage is more than 10V at idle.

WITH CONSULT-II

1. Turn ignition switch ON and select “DATA MONITOR” mode with CONSULT-II.
2. Start engine and run it for at least 5 seconds at idle speed.
3. If 1st trip DTC is detected, go to EC-297, "Diagnostic Procedure".

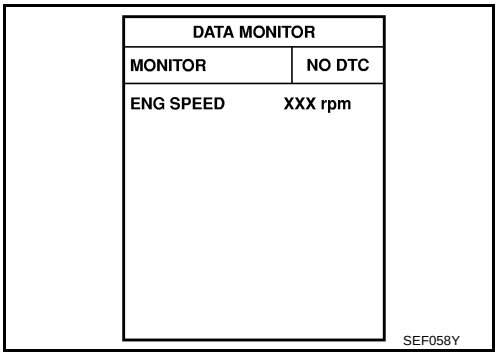

WITH GST

Follow the procedure “WITH CONSULT-II” above.

Wiring Diagram

ABS006PY

EC-KS-01

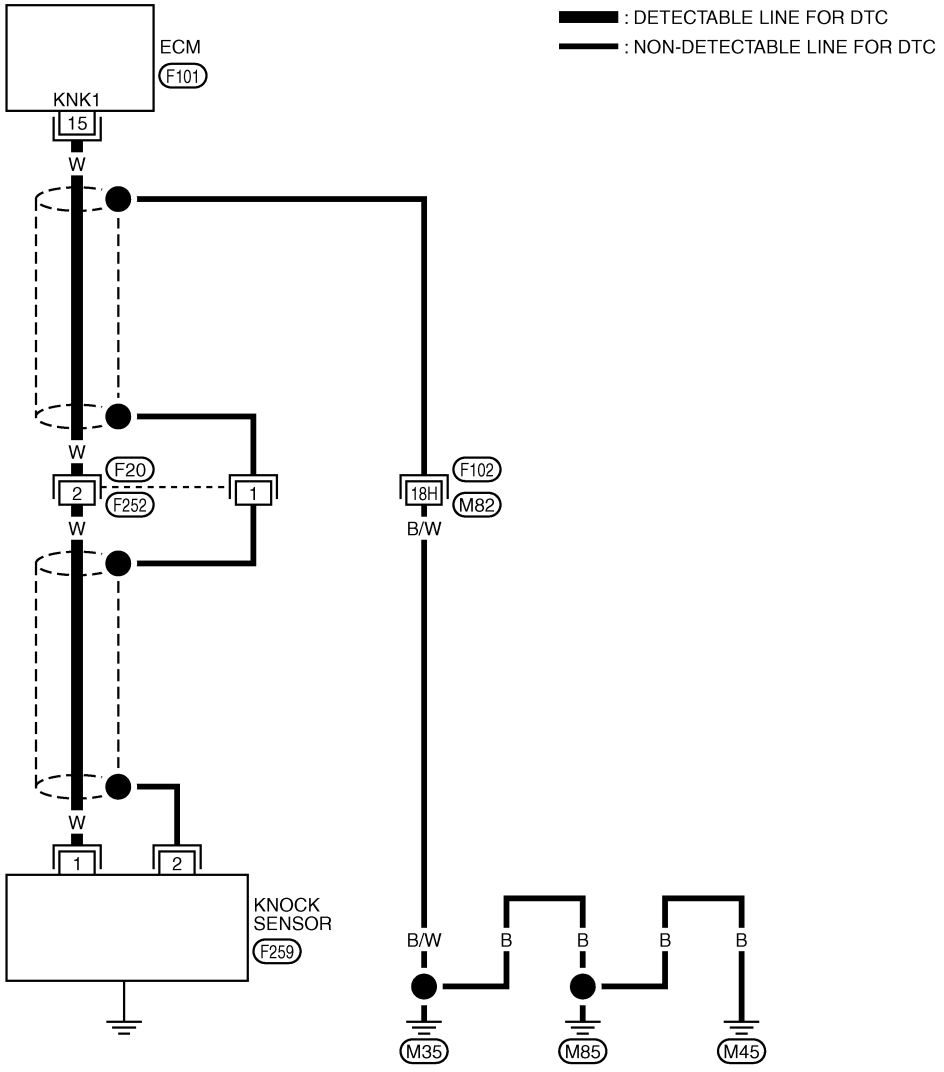

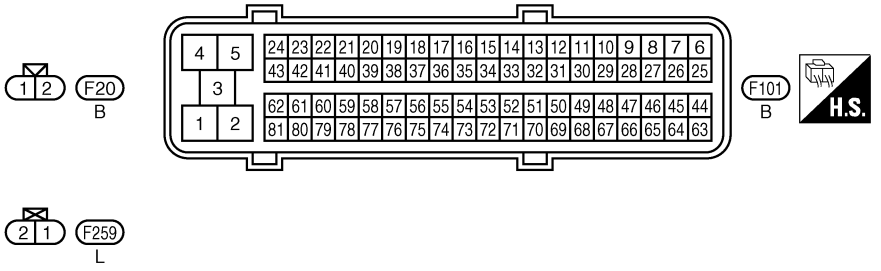

REFER TO THE FOLLOWING.
F102 -SUPER MULTIPLE JUNCTION (SMJ)

TBWM0296E

Specification data are reference values and are measured between each terminal and ground.

CAUTION:
Do not use ECM ground terminals when measuring input/output voltage. Doing so may result in damage to the ECM's transistor. Use a ground other than ECM terminals, such as the ground.

TERMINAL NO.	WIRE COLOR	ITEM	CONDITION	DATA (DC Voltage)
15	W	Knock sensor	**[Engine is running]** ● Idle speed	Approximately 2.5V

Diagnostic Procedure

ABS006PZ

1. CHECK KNOCK SENSOR INPUT SIGNAL CIRCUIT FOR OPEN AND SHORT-I

1. Turn ignition switch OFF.
2. Disconnect ECM harness connector.
3. Check resistance between ECM terminal 15 and ground. Refer to Wiring Diagram.

   NOTE:
   It is necessary to use an ohmmeter which can measure more than 10 MΩ.

   Resistance: Approximately 532 - 588 kΩ [at 20°C (68°F)]

4. Also check harness for short to ground and short to power.

OK or NG

OK >> GO TO 4.
NG >> GO TO 2.

2. CHECK KNOCK SENSOR INPUT SIGNAL CIRCUIT FOR OPEN AND SHORT-II

1. Disconnect knock sensor harness connector.
2. Check harness continuity between ECM terminal 15 and knock sensor terminal 1.
   Refer to Wiring Diagram.

   Continuity should exist.

3. Also check harness for short to ground and short to power.

OK or NG

OK >> GO TO 4.
NG >> GO TO 3.

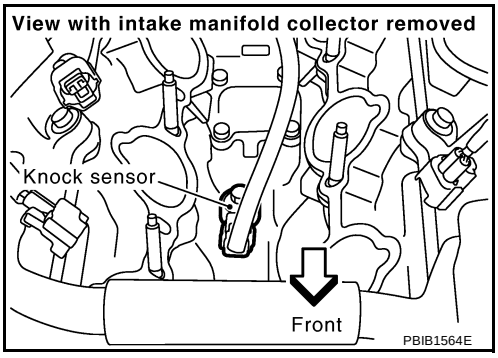

3. DETECT MALFUNCTIONING PART

Check the following.

- Harness connectors F20, F252
- Harness for open or short between ECM and knock sensor

>> Repair open circuit or short to ground or short to power in harness or connectors.

4. CHECK KNOCK SENSOR

Refer to EC-298, "Component Inspection" .

OK or NG

OK >> GO TO 5.
NG >> Replace knock sensor.

5. CHECK GROUND CONNECTIONS

Loosen and retighten ground three screws on the body. Refer to EC-170, "Ground Inspection" .

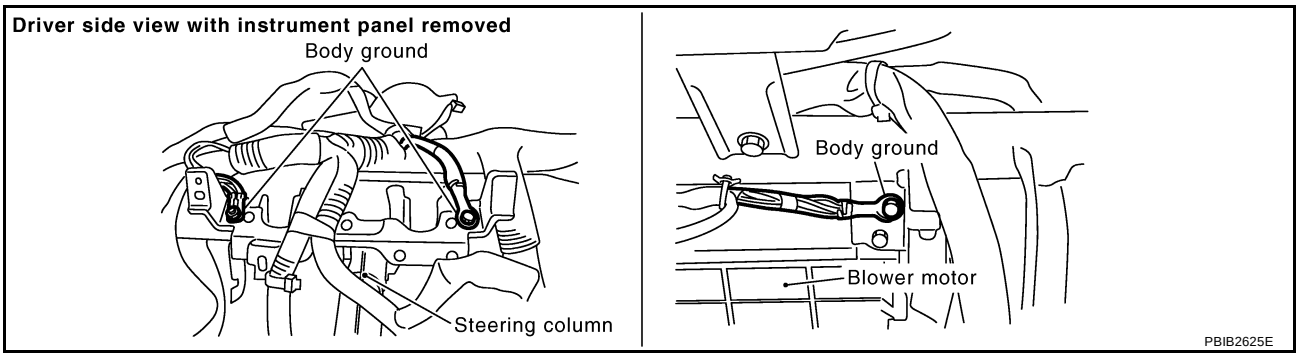

OK or NG

OK >> GO TO 6.
NG >> Repair or replace ground connections.

6. CHECK KNOCK SENSOR SHIELD CIRCUIT FOR OPEN AND SHORT

1. Disconnect knock sensor harness connector.
2. Check harness continuity between knock sensor terminal 2 and ground. Refer to Wiring Diagram.

Continuity should exist.

OK or NG

OK >> GO TO 8.
NG >> GO TO 7.

7. DETECT MALFUNCTIONING PART

Check the following.

- Harness connectors F20, F252
- Harness connectors F102, M82
- Harness for open or short between knock sensor terminal 2 and ground

>> Repair open circuit or short power in harness or connectors.

8. CHECK INTERMITTENT INCIDENT

Refer to EC-163, "TROUBLE DIAGNOSIS FOR INTERMITTENT INCIDENT" .

>> **INSPECTION END**

Component Inspection

ABS006Q0

KNOCK SENSOR

Check resistance between knock sensor terminal 1 and ground.

NOTE:
It is necessary to use an ohmmeter which can measure more than 10 MΩ.

Resistance: Approximately 532 - 588 kΩ [at 20°C (68°F)]

CAUTION:
Do not use any knock sensors that have been dropped or physically damaged. Use only new ones.

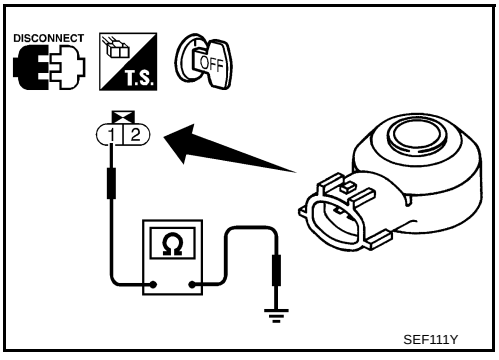

Removal and Installation

ABS006Q1

KNOCK SENSOR

Refer to EM-245, "CYLINDER BLOCK" .

DTC P0335 CKP SENSOR (POS)

PFP:23731

Component Description

ABS006Q2

The crankshaft position sensor (POS) is located on the oil pan facing the gear teeth (cogs) of the signal plate. It detects the fluctuation of the engine revolution.
The sensor consists of a permanent magnet and Hall IC.
When the engine is running, the high and low parts of the teeth cause the gap with the sensor to change.
The changing gap causes the magnetic field near the sensor to change.
Due to the changing magnetic field, the voltage from the sensor changes.
The ECM receives the voltage signal and detects the fluctuation of the engine revolution.
ECM receives the signals as shown in the figure.

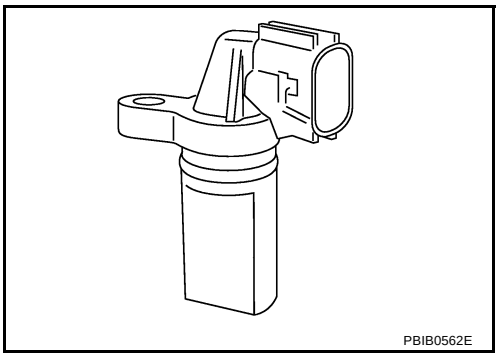

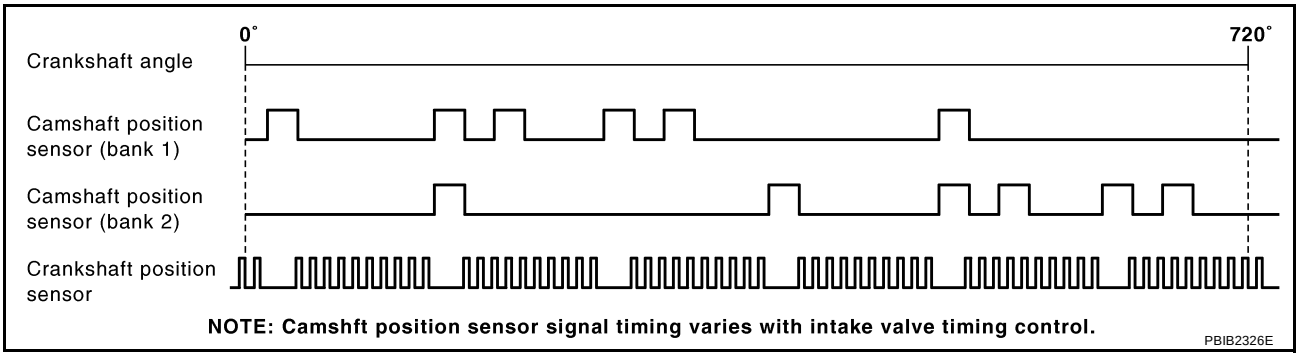

CONSULT-II Reference Value in Data Monitor Mode

ABS006Q3

Specification data are reference values.

MONITOR ITEM	CONDITION	SPECIFICATION
ENG SPEED	● Run engine and compare CONSULT-II value with the tachometer indication.	Almost the same speed as the tachometer indication.

On Board Diagnosis Logic

ABS006Q4

DTC No.	Trouble diagnosis name	DTC detecting condition	Possible cause
P0335 0335	Crankshaft position sensor (POS) circuit	● The crankshaft position sensor (POS) signal is not detected by the ECM during the first few seconds of engine cranking. ● The proper pulse signal from the crankshaft position sensor (POS) is not sent to ECM while the engine is running. ● The crankshaft position sensor (POS) signal is not in the normal pattern during engine running.	● Harness or connectors (The sensor circuit is open or shorted) ● Crankshaft position sensor (POS) ● Signal plate

DTC Confirmation Procedure

ABS006Q5

NOTE:
If DTC Confirmation Procedure has been previously conducted, always turn ignition switch OFF and wait at least 10 seconds before conducting the next test.
TESTING CONDITION:
Before performing the following procedure, confirm that battery voltage is more than 10.5V with ignition switch ON.

WITH CONSULT-II

1. Turn ignition switch ON and select “DATA MONITOR” mode with CONSULT-II.
2. Crank engine for at least 2 seconds and run it for at least 5 seconds at idle speed.
3. If 1st trip DTC is detected, go to EC-303, "Diagnostic Procedure".
   If 1st trip DTC is not detected, go to next step.
4. Maintaining engine speed at more than 800 rpm for at least 5 seconds.
5. If 1st trip DTC is detected, go to EC-303, "Diagnostic Procedure".

DATA MONITOR	
MONITOR	NO DTC
ENG SPEED	XXX rpm

SEF058Y

WITH GST

Follow the procedure “WITH CONSULT-II” above.

Wiring Diagram

ABS006Q6

EC-POS-01

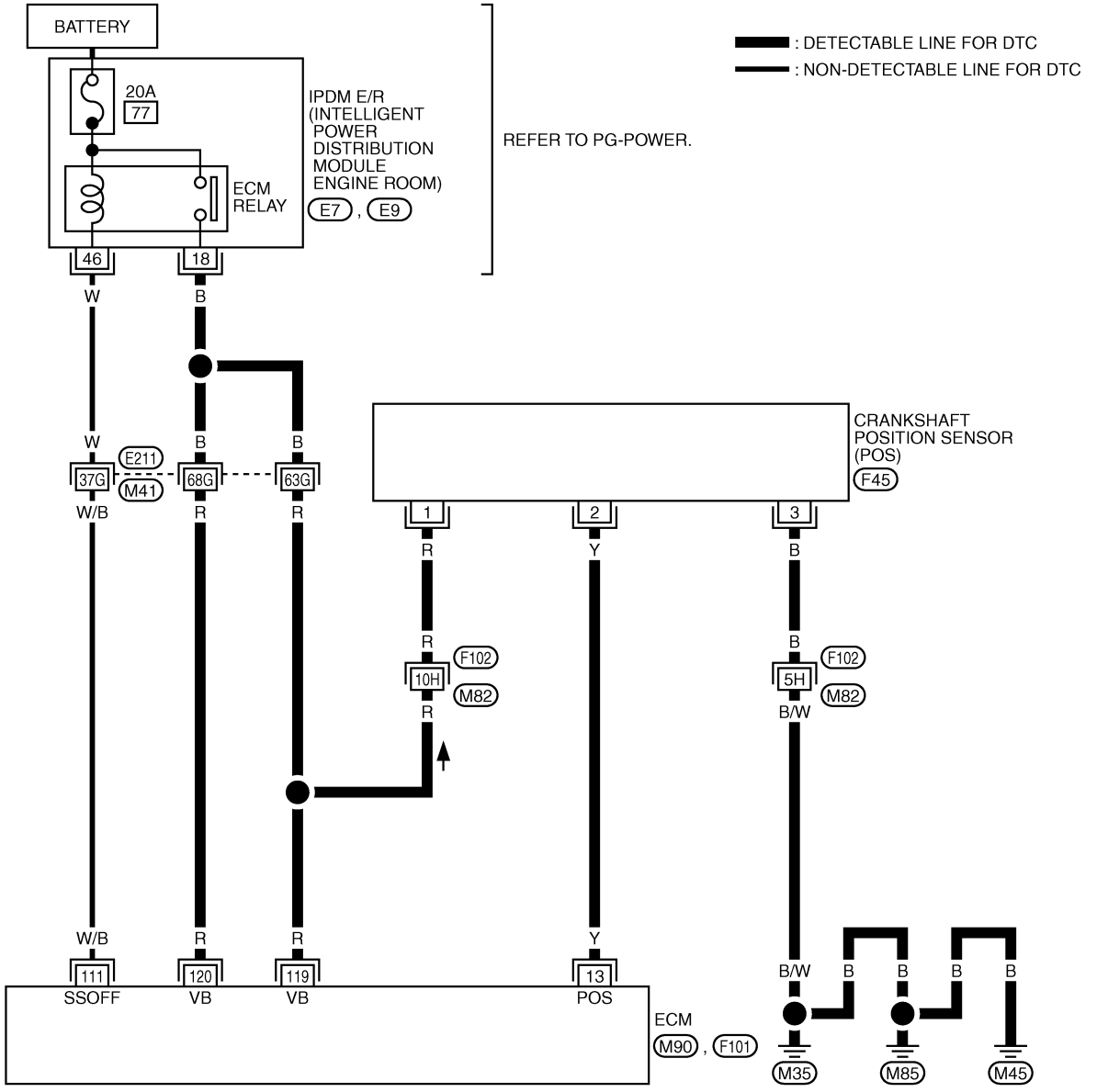

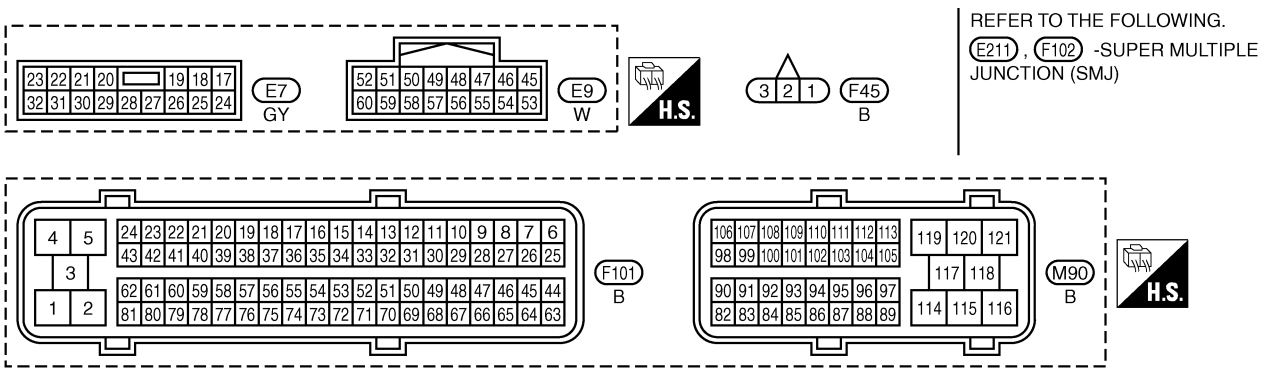

TBWM0395E

Specification data are reference values and are measured between each terminal and ground.
Pulse signal is measured by CONSULT-II.

CAUTION:
Do not use ECM ground terminals when measuring input/output voltage. Doing so may result in damage to the ECM's transistor. Use a ground other than ECM terminals, such as the ground.

TERMINAL NO.	WIRE COLOR	ITEM	CONDITION	DATA (DC Voltage)
13	Y	Crankshaft position sensor (POS)	**[Engine is running]** ● **Warm-up condition** ● Idle speed **NOTE:** The pulse cycle changes depending on rpm at idle	Approximately 1.6V★ 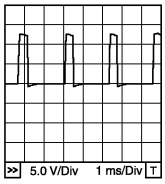 PBIB1041E
			[Engine is running] ● Engine speed is 2,000 rpm	Approximately 1.4V★ 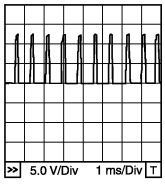 PBIB1042E

★: Average voltage for pulse signal (Actual pulse signal can be confirmed by oscilloscope.)

Diagnostic Procedure

ABS006Q7

1. CHECK GROUND CONNECTIONS

1. Turn ignition switch OFF.
2. Loosen and retighten ground three screws on the body. Refer to EC-170, "Ground Inspection" .

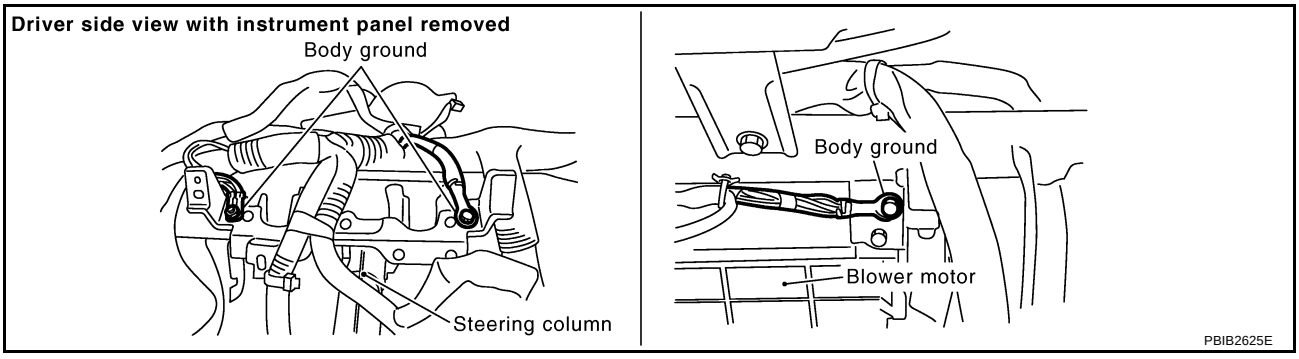

OK or NG

OK >> GO TO 2.
NG >> Repair or replace ground connections.

2. CHECK CRANKSHAFT POSITION (CKP) SENSOR (POS) POWER SUPPLY CIRCUIT

1. Disconnect crankshaft position (CKP) sensor (POS) harness connector.
2. Turn ignition switch ON.

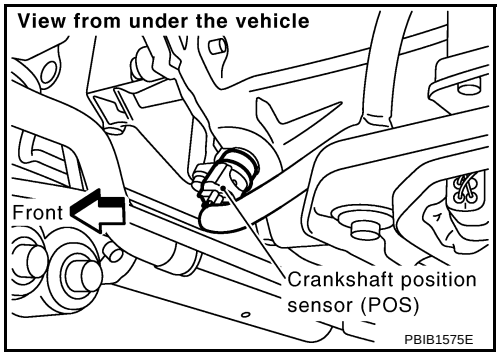

3. Check voltage between CKP sensor (POS) terminal 1 and ground with CONSULT-II or tester.

   Voltage: Battery voltage

4. Also check harness for short to ground and short to power.

OK or NG

OK >> GO TO 4.
NG >> GO TO 3.

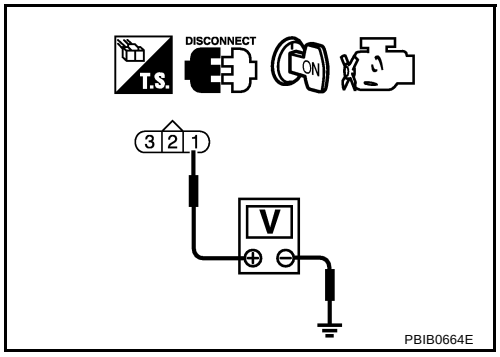

3. DETECT MALFUNCTIONING PART

Check the following.

- Harness connectors E211, M41
- Harness connectors F102, M82
- Harness for open or short between crankshaft position sensor (POS) and ECM
- Harness for open or short between crankshaft position sensor (POS) and IPDM E/R

>> Repair open circuit or short to ground or short to power in harness or connectors.

4. CHECK CKP SENSOR (POS) GROUND CIRCUIT FOR OPEN AND SHORT

1. Turn ignition switch OFF.
2. Check harness continuity between CKP sensor (POS) terminal 3 and ground. Refer to Wiring Diagram.

   Continuity should exist.

3. Also check harness for short to power.

OK or NG

OK >> GO TO 6.
NG >> GO TO 5.

5. DETECT MALFUNCTIONING PART

Check the following.

- Harness connectors F102, M82
- Harness for open or short between crankshaft position sensor (POS) and ground

>> Repair open circuit or short to power in harness or connectors.

6. CHECK CKP SENSOR (POS) INPUT SIGNAL CIRCUIT FOR OPEN AND SHORT

1. Disconnect ECM harness connector.
2. Check harness continuity between ECM terminal 13 and CKP sensor (POS) terminal 2. Refer to Wiring Diagram.

   Continuity should exist.

3. Also check harness for short to ground and short to power.

OK or NG

OK >> GO TO 7.
NG >> Repair open circuit or short to ground or short to power in harness or connectors.

7. CHECK CRANKSHAFT POSITION SENSOR (POS)

Refer to EC-306, "Component Inspection" .

OK or NG

OK >> GO TO 8.
NG >> Replace crankshaft position sensor (POS).

8. CHECK GEAR TOOTH

Visually check for chipping signal plate gear tooth.

OK or NG

OK >> GO TO 9.
NG >> Replace the signal plate.

9. CHECK INTERMITTENT INCIDENT

Refer to EC-163, "TROUBLE DIAGNOSIS FOR INTERMITTENT INCIDENT" .

>> **INSPECTION END**

Component Inspection

ABS006Q8

CRANKSHAFT POSITION SENSOR (POS)

1. Loosen the fixing bolt of the sensor.
2. Disconnect crankshaft position sensor (POS) harness connector.
3. Remove the sensor.
4. Visually check the sensor for chipping.

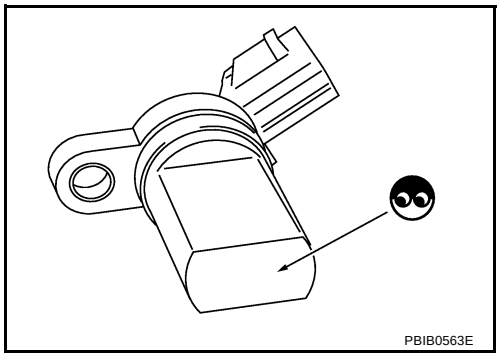

5. Check resistance as shown in the figure.

Terminal No. (Polarity)	Resistance Ω [at 25°C (77°F)]
1 (+) - 2 (-)	Except 0 or ∞
1 (+) - 3 (-)	
2 (+) - 3 (-)	

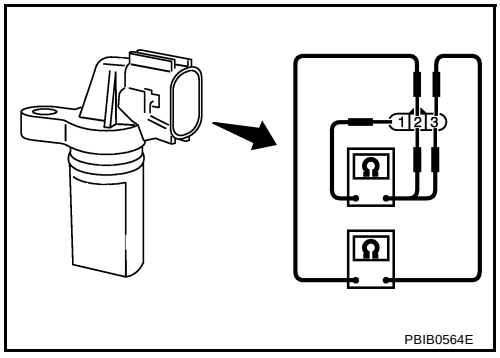

Removal and Installation

ABS006Q9

CRANKSHAFT POSITION SENSOR (POS)

Refer to AT-274, "REMOVAL" .

DTC P0340, P0345 CMP SENSOR (PHASE)

PFP:23731

Component Description

ABS006QA

The camshaft position sensor (PHASE) senses the retraction of camshaft (INT) to identify a particular cylinder. The camshaft position sensor (PHASE) senses the piston position.
When the crankshaft position sensor (POS) system becomes inoperative, the camshaft position sensor (PHASE) provides various controls of engine parts instead, utilizing timing of cylinder identification signals.
The sensor consists of a permanent magnet and Hall IC.
When engine is running, the high and low parts of the teeth cause the gap with the sensor to change.
The changing gap causes the magnetic field near the sensor to change.
Due to the changing magnetic field, the voltage from the sensor changes.
ECM receives the signals as shown in the figure.

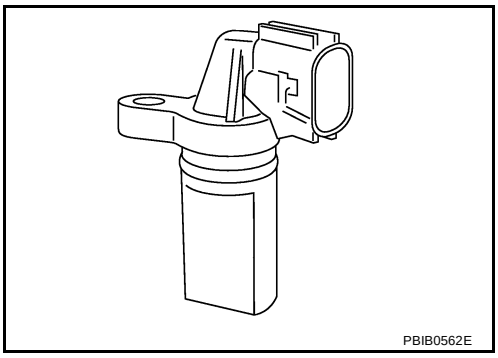

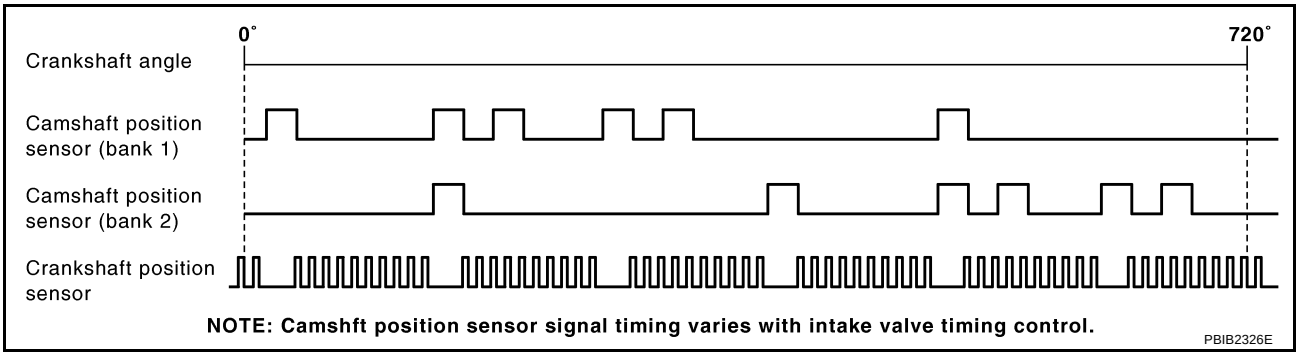

CONSULT-II Reference Value in Data Monitor Mode

ABS00B4F

Specification data are reference values.

MONITOR ITEM	CONDITION	SPECIFICATION
ENG SPEED	● Run engine and compare CONSULT-II value with the tachometer indication.	Almost the same speed as the tachometer indication.

On Board Diagnosis Logic

ABS006QB

DTC No.	Trouble diagnosis name	DTC detecting condition	Possible cause
P0340 0340 (Bank 1)	Camshaft position sensor (PHASE) circuit	● The cylinder No. signal is not sent to ECM for the first few seconds during engine cranking. ● The cylinder No. signal is not sent to ECM during engine running. ● The cylinder No. signal is not in the normal pattern during engine running.	● Harness or connectors (The sensor circuit is open or shorted) ● Camshaft position sensor (PHASE) ● Camshaft (INT) ● Starter motor (Refer to SC-10 .) ● Starting system circuit (Refer to SC-10 .) ● Dead (Weak) battery
P0345 0345 (Bank 2)			

DTC Confirmation Procedure

ABS006QC

NOTE:
If DTC Confirmation Procedure has been previously conducted, always turn ignition switch OFF and wait at least 10 seconds before conducting the next test.
TESTING CONDITION:
Before performing the following procedure, confirm that battery voltage is more than 10.5V with ignition switch ON.

WITH CONSULT-II

1. Turn ignition switch ON.

2. Select “DATA MONITOR” mode with CONSULT-II.
3. Crank engine for at least 2 seconds and run it for at least 5 seconds at idle speed.
4. If 1st trip DTC is detected, go to EC-312, "Diagnostic Procedure".
   If 1st trip DTC is not detected, go to next step.
5. Maintaining engine speed at more than 800 rpm for at least 5 seconds.
6. If 1st trip DTC is detected, go to EC-312, "Diagnostic Procedure".

DATA MONITOR	
MONITOR	NO DTC
ENG SPEED	XXX rpm

SEF058Y

WITH GST

Follow the procedure “WITH CONSULT-II” above.

Wiring Diagram
BANK 1

ABS006QD

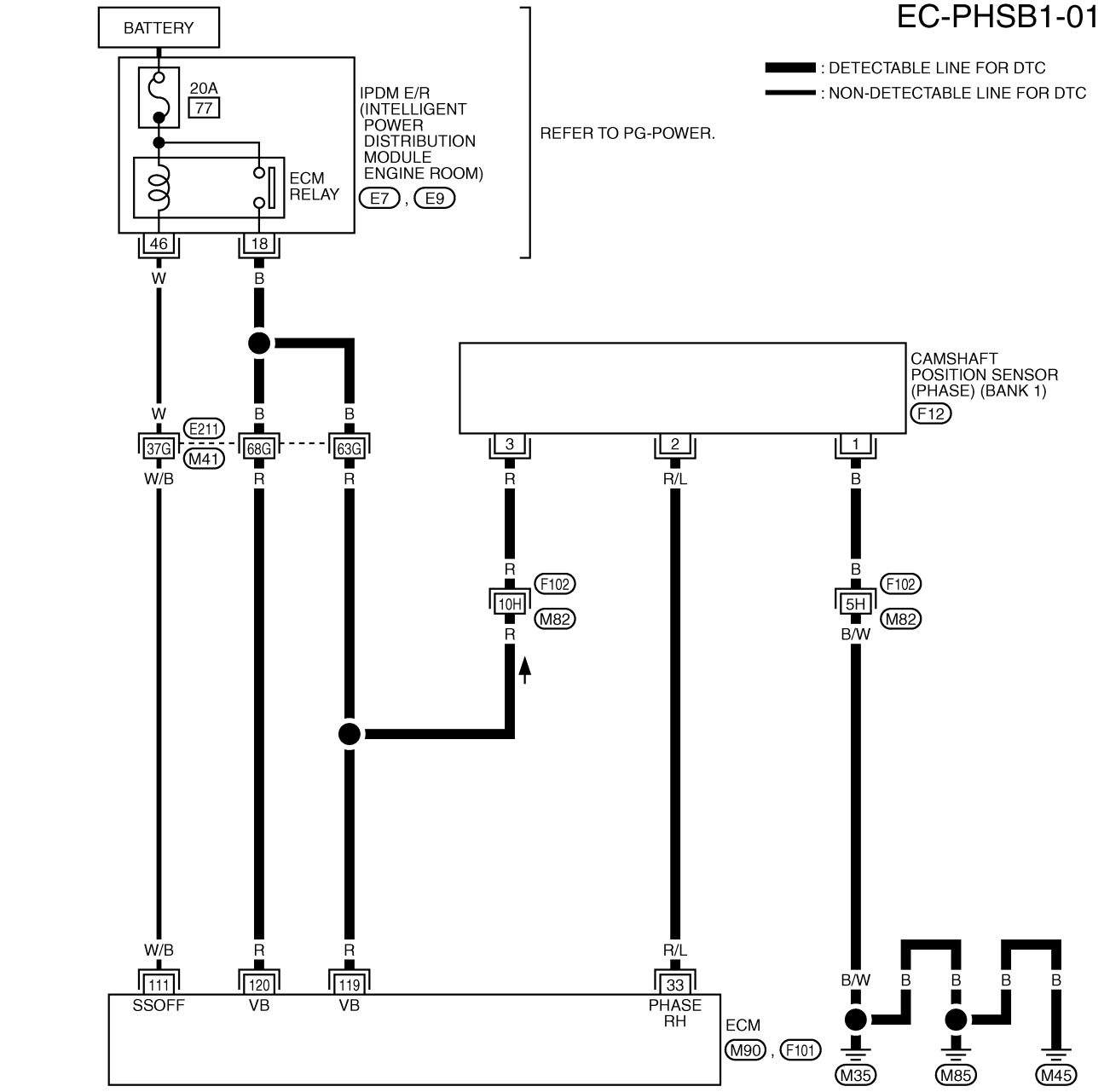

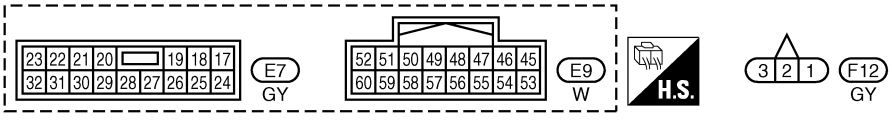

REFER TO THE FOLLOWING.
E211 , F102 -SUPER MULTIPLE JUNCTION (SMJ)

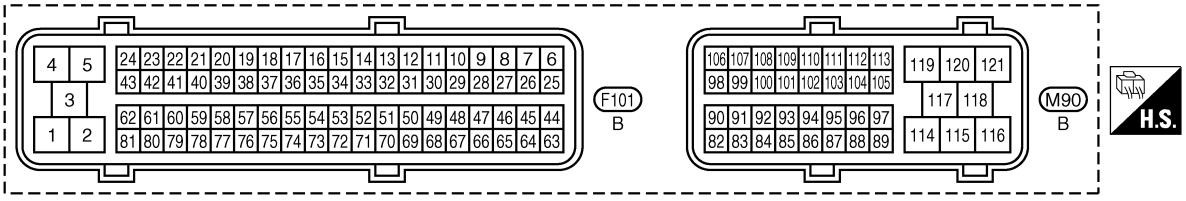

TBWM0396E

Specification data are reference values and are measured between each terminal and ground.
Pulse signal is measured by CONSULT-II.

CAUTION:
Do not use ECM ground terminals when measuring input/output voltage. Doing so may result in damage to the ECM's transistor. Use a ground other than ECM terminals, such as the ground.

TERMINAL NO.	WIRE COLOR	ITEM	CONDITION	DATA (DC Voltage)
33	R/L	Camshaft position sensor (PHASE) (bank 1)	**[Engine is running]** ● **Warm-up condition** ● Idle speed **NOTE:** The pulse cycle changes depending on rpm at idle	1.0 - 4.0V★ 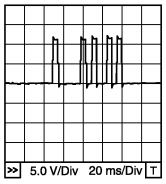 PBIB1039E
			[Engine is running] ● Engine speed is 2,000 rpm	1.0 - 4.0V★ 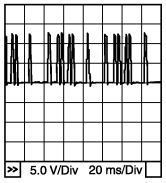 PBIB1040E

★: Average voltage for pulse signal (Actual pulse signal can be confirmed by oscilloscope.)

BANK 2

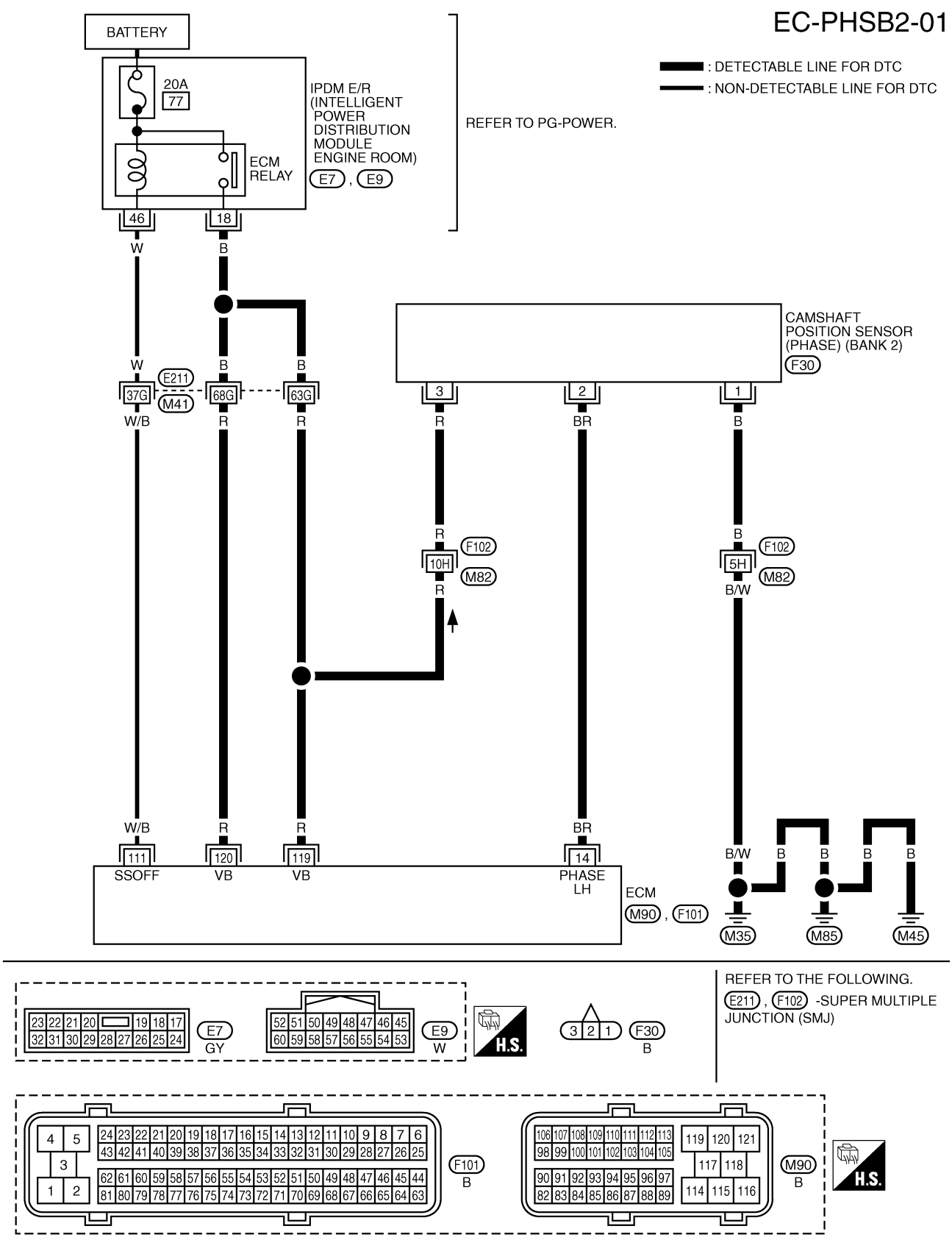
EC-PHSB2-01
: DETECTABLE LINE FOR DTC
: NON-DETECTABLE LINE FOR DTC
BATTERY
20A
77
IPDM E/R
(INTELLIGENT
POWER
DISTRIBUTION
MODULE
ENGINE ROOM)
E7 , E9
ECM
RELAY
REFER TO PG-POWER.
46
18
W
B
CAMSHAFT
POSITION SENSOR
(PHASE) (BANK 2)
F30
E211
37G
M41
68G
63G
3
2
1
W/B
R
BR
B
F102
10H
M82
5H
B/W
111
120
119
14
SSOFF
VB
PHASE
LH
ECM
M90 , F101
M35
M85
M45
REFER TO THE FOLLOWING.
E211 , F102 -SUPER MULTIPLE
JUNCTION (SMJ)
E7
GY
E9
W
H.S.
F30
B
F101
B
M90
B
TBWM0397E

Specification data are reference values and are measured between each terminal and ground.
Pulse signal is measured by CONSULT-II.

CAUTION:
Do not use ECM ground terminals when measuring input/output voltage. Doing so may result in damage to the ECM's transistor. Use a ground other than ECM terminals, such as the ground.

TERMINAL NO.	WIRE COLOR	ITEM	CONDITION	DATA (DC Voltage)
14	BR	Camshaft position sensor (PHASE) (bank 2)	**[Engine is running]** ● **Warm-up condition** ● Idle speed **NOTE:** The pulse cycle changes depending on rpm at idle	1.0 - 4.0V★ 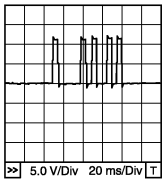 PBIB1039E
			[Engine is running] ● Engine speed is 2,000 rpm	1.0 - 4.0V★ 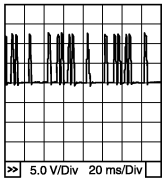 PBIB1040E

★: Average voltage for pulse signal (Actual pulse signal can be confirmed by oscilloscope.)

Diagnostic Procedure

ABS006QE

1. CHECK STARTING SYSTEM

Turn ignition switch to START position.

Does the engine turn over?
Does the starter motor operate?

Yes or No

Yes >> GO TO 2.
No >> Check starting system. (Refer to SC-10, "STARTING SYSTEM" .)

2. CHECK GROUND CONNECTIONS

1. Turn ignition switch OFF.
2. Loosen and retighten ground three screws on the body. Refer to EC-170, "Ground Inspection" .

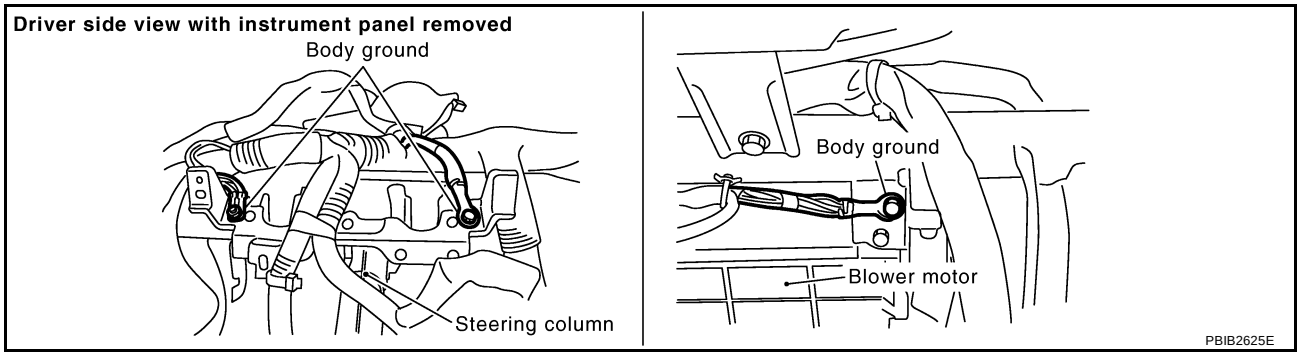

OK or NG

OK >> GO TO 3.
NG >> Repair or replace ground connections.

3. CHECK CAMSHAFT POSITION (CMP) SENSOR (PHASE) POWER SUPPLY CIRCUIT

1. Disconnect camshaft position (CMP) sensor (PHASE) harness connector.

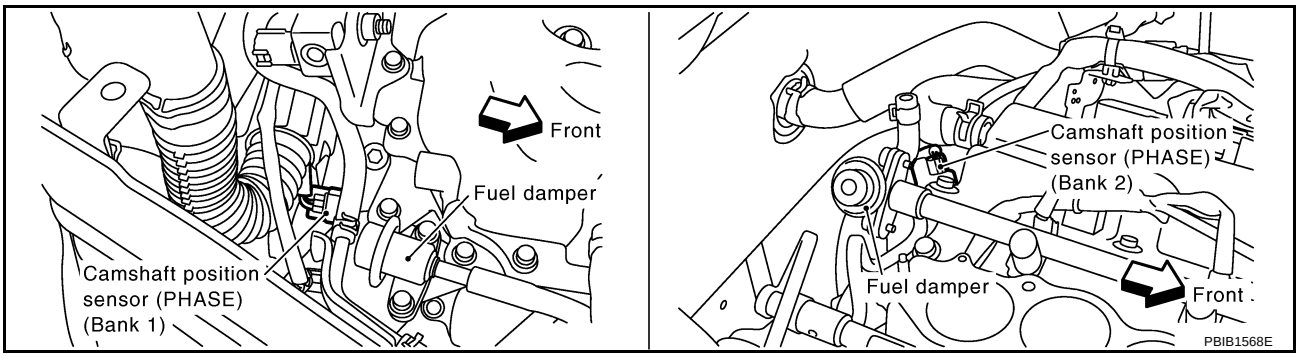

2. Turn ignition switch ON.
3. Check voltage between CMP sensor (PHASE) terminal 3 and ground with CONSULT-II or tester.

Voltage: Battery voltage

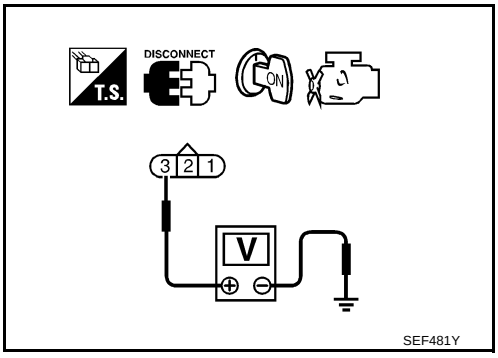

OK or NG

OK >> GO TO 5.
NG >> GO TO 4.

4. DETECT MALFUNCTIONING PART

Check the following.

- Harness connectors E211, M41
- Harness connectors F102, M82
- Harness for open or short between camshaft position sensor (PHASE) and ECM
- Harness for open or short between camshaft position sensor (PHASE) and IPDM E/R

>> Repair open circuit or short to ground or short to power in harness or connectors.

5. CHECK CMP SENSOR (PHASE) GROUND CIRCUIT FOR OPEN AND SHORT

1. Turn ignition switch OFF.
2. Check harness continuity between CMP sensor (PHASE) terminal 1 and ground.

Continuity should exist.

3. Also check harness for short to power.

OK or NG

OK >> GO TO 7.
NG >> GO TO 6.

6. DETECT MALFUNCTIONING PART

Check the following.

- Harness connectors F102, M82
- Harness for open or short between CMP sensor (PHASE) and ground

>> Repair open circuit or short to power in harness or connectors.

7. CHECK CMP SENSOR (PHASE) INPUT SIGNAL CIRCUIT FOR OPEN AND SHORT

1. Disconnect ECM harness connector.
2. Check harness continuity between ECM terminal 33 (Bank 1) or 14 (Bank 2) and CMP sensor (PHASE) terminal 2.
   Refer to Wiring Diagram.

   Continuity should exist.

3. Also check harness for short to ground and short to power.

OK or NG

OK >> GO TO 8.
NG >> Repair open circuit or short to ground or short to power in harness or connectors.

8. CHECK CAMSHAFT POSITION SENSOR (PHASE)

Refer to EC-315, "Component Inspection" .

OK or NG

OK >> GO TO 9.
NG >> Replace camshaft position sensor (PHASE).

9. CHECK CAMSHAFT (INT)

Check the following.

- Accumulation of debris to the signal plate of camshaft rear end
- Chipping signal plate of camshaft rear end

OK or NG

OK >> GO TO 10.
NG >> Remove debris and clean the signal plate of camshaft rear end or replace camshaft.

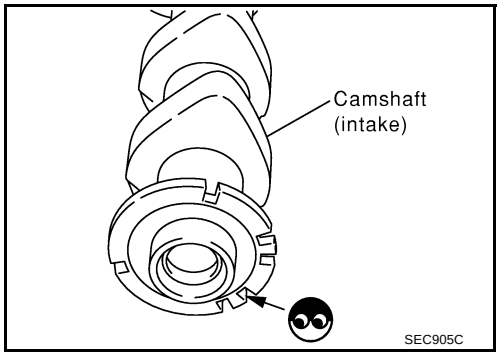

10. CHECK INTERMITTENT INCIDENT

Refer to EC-163, "TROUBLE DIAGNOSIS FOR INTERMITTENT INCIDENT" .

>> **INSPECTION END**

Component Inspection

ABS006QF

CAMSHAFT POSITION SENSOR (PHASE)

1. Loosen the fixing bolt of the sensor.
2. Disconnect camshaft position sensor (PHASE) harness connector.
3. Remove the sensor.
4. Visually check the sensor for chipping.

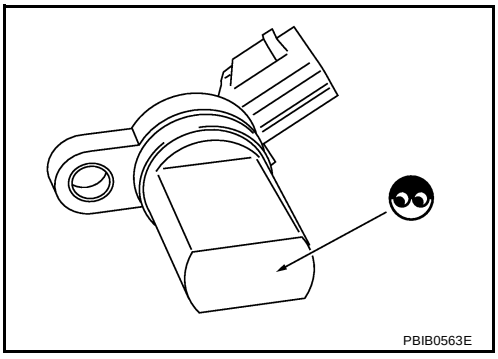

5. Check resistance as shown in the figure.

Terminal No. (Polarity)	Resistance Ω [at 25°C (77°F)]
1 (+) - 2 (-)	Except 0 or ∞
1 (+) - 3 (-)	
2 (+) - 3 (-)	

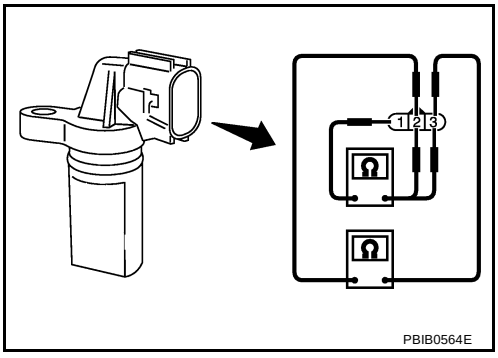

Removal and Installation

ABS006QG

CAMSHAFT POSITION SENSOR (PHASE)

Refer to EM-84, "CAMSHAFT" .

DTC P0420, P0430 THREE WAY CATALYST FUNCTION

PFP:20905

On Board Diagnosis Logic

ABS006QH

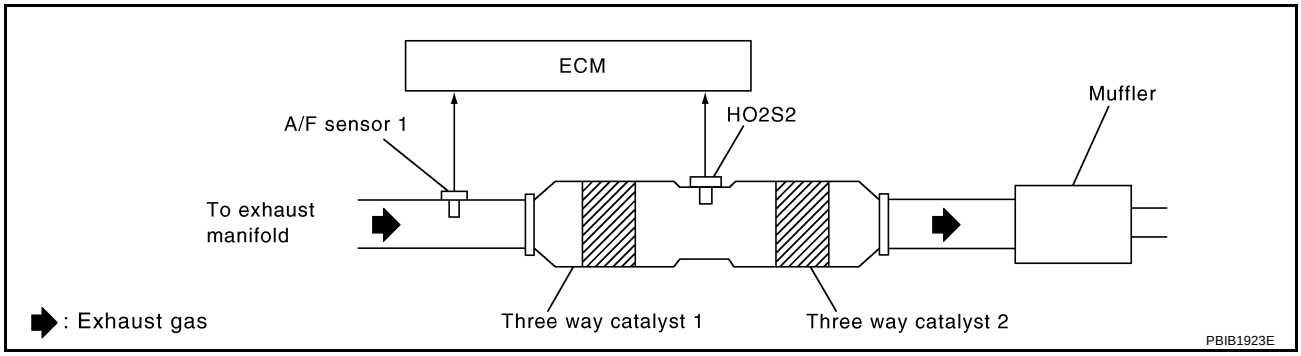

The ECM monitors the switching frequency ratio of air fuel ratio (A/F) sensor 1 and heated oxygen sensor 2.
A three way catalyst 1 with high oxygen storage capacity will indicate a low switching frequency of heated oxygen sensor 2. As oxygen storage capacity decreases, the heated oxygen sensor 2 switching frequency will increase.
When the frequency ratio of air fuel ratio (A/F) sensor 1 and heated oxygen sensor 2 approaches a specified limit value, the three way catalyst 1 malfunction is diagnosed.

DTC No.	Trouble diagnosis name	DTC detecting condition	Possible cause
P0420 0420 (Bank 1)	Catalyst system efficiency below threshold	● Three way catalyst 1 does not operate properly. ● Three way catalyst 1 does not have enough oxygen storage capacity.	● Three way catalyst 1 ● Exhaust tube ● Intake air leaks ● Fuel injector ● Fuel injector leaks ● Spark plug ● Improper ignition timing
P0430 0430 (Bank 2)			

DTC Confirmation Procedure

ABS006QI

NOTE:
If DTC Confirmation Procedure has been previously conducted, always turn ignition switch OFF and wait at least 10 seconds before conducting the next test.

WITH CONSULT-II

TESTING CONDITION:
Do not hold engine speed for more than the specified minutes below.

1. Turn ignition switch ON and select “DATA MONITOR” mode with CONSULT-II.
2. Start engine and warm it up to the normal operating temperature.
3. Turn ignition switch OFF and wait at least 10 seconds.
4. Start engine and keep the engine speed between 3,500 and 4,000 rpm for at least 1 minute under no load.
5. Let engine idle for 1 minute.
6. Make sure that “COOLAN TEMP/S” indicates more than 70°C (158°F).
   If not, warm up engine and go to next step when “COOLAN TEMP/S” indication reaches to 70°C (158°F).
7. Open engine hood.

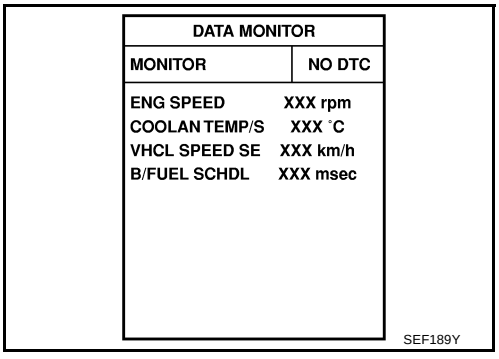

8. Select “DTC & SRT CONFIRMATION” then “SRT WORK SUPPORT” mode with CONSULT-II.
9. Rev engine up to 2,000 to 3,000 rpm and hold it for 3 consecutive minutes then release the accelerator pedal completely.
   If “INCMP” of “CATALYST” changed to “CMPLT”, go to step 12.
10. Wait 5 seconds at idle.

SRT WORK SUPPORT	
CATALYST	INCMP
EVAP SYSTEM	INCMP
HO2S HTR	CMPLT
HO2S	INCMP
MONITOR	
ENG SPEED	XXX rpm
MAS A/F SE-B1	XXX V
B/FUEL SCHDL	XXX msec
A/F ALPHA-B1	XXX V
COOLAN TEMP/S	XX ˚C
A/F SEN1 (B1)	XXX V

PBIB1784E

11. Rev engine up to 2,000 to 3,000 rpm and maintain it until “INCMP” of “CATALYST” changes to “CMPLT” (It will take approximately 5 minutes).
    If not “CMPLT”, stop engine and cool it down to less than 70°C (158°F) and then retest from step 1.

SRT WORK SUPPORT	
CATALYST	CMPLT
EVAP SYSTEM	INCMP
HO2S HTR	CMPLT
HO2S	INCMP
MONITOR	
ENG SPEED	XXX rpm
MAS A/F SE-B1	XXX V
B/FUEL SCHDL	XXX msec
A/F ALPHA-B1	XXX V
COOLAN TEMP/S	XX ˚C
A/F SEN1 (B1)	XXX V

PBIB1785E

12. Select “SELF-DIAG RESULTS” mode with CONSULT-II.
13. Confirm that the 1st trip DTC is not detected.
    If the 1st trip DTC is detected, go to EC-318, "Diagnostic Procedure" .

SELF DIAG RESULTS	
DTC RESULTS	TIME
NO DTC IS DETECTED. FURTHER TESTING MAY BE REQUIRED.	

SEF535Z

Overall Function Check

ABS006QJ

Use this procedure to check the overall function of the three way catalyst 1. During this check, a 1st trip DTC might not be confirmed.

WITH GST

1. Start engine and warm it up to the normal operating temperature.
2. Turn ignition switch OFF and wait at least 10 seconds.
3. Start engine and keep the engine speed between 3,500 and 4,000 rpm for at least 1 minute under no load.
4. Let engine idle for 1 minute.
5. Open engine hood.
6. Set voltmeter probe between ECM terminals 74 [HO2S2 (bank 1) signal], 55 [HO2S2 (bank 2) signal] and ground.
7. Keep engine speed at 2,500 rpm constant under no load.
8. Make sure that the voltage does not vary for more than 5 seconds.
   If the voltage fluctuation cycle takes less than 5 seconds, go to EC-318, "Diagnostic Procedure" .
   - 1 cycle: 0.6 - 1.0 → 0 - 0.3 → 0.6 - 1.0

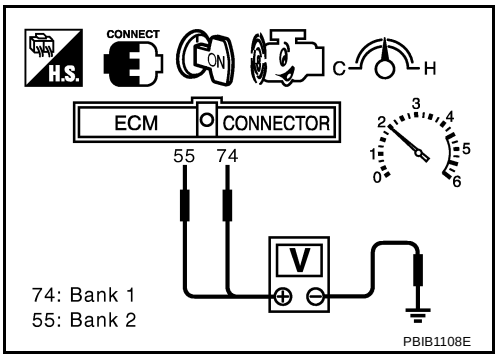

PBIB1108E

Diagnostic Procedure

ABS006QK

1. CHECK EXHAUST SYSTEM

Visually check exhaust tubes and muffler for dent.

OK or NG

OK >> GO TO 2.
NG >> Repair or replace.

2. CHECK EXHAUST GAS LEAK

1. Start engine and run it at idle.
2. Listen for an exhaust gas leak before the three way catalyst 1.

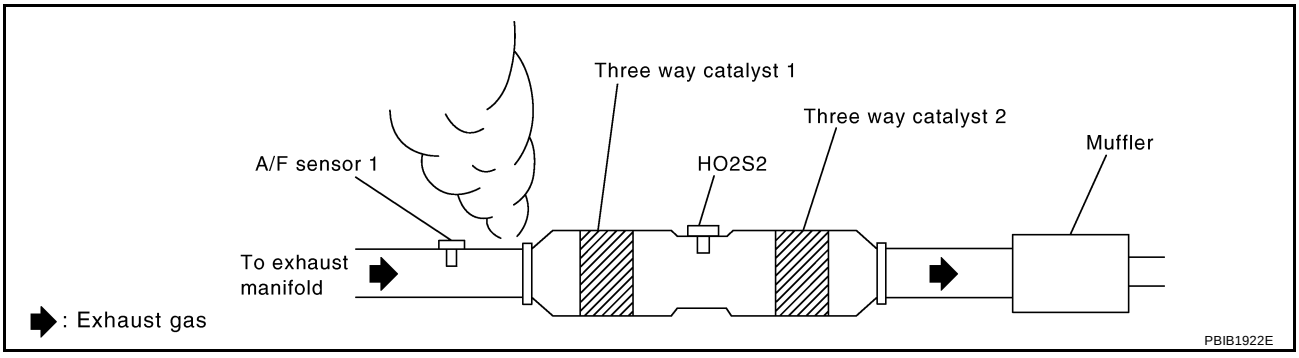

OK or NG

OK >> GO TO 3.
NG >> Repair or replace.

3. CHECK INTAKE AIR LEAK

Listen for an intake air leak after the mass air flow sensor.

OK or NG

OK >> GO TO 4.
NG >> Repair or replace.

4. CHECK IGNITION TIMING

Check the following items. Refer to EC-78, "Basic Inspection" .

Items	Specifications
Target idle speed	650 ± 50 rpm (in P or N position)
Ignition timing	15 ± 5° BTDC (in P or N position)

OK or NG

OK >> GO TO 5.
NG >> Follow the EC-78, "Basic Inspection" .

5. CHECK INJECTOR

1. Stop engine and then turn ignition switch ON.
2. Check voltage between ECM terminals 21, 22, 23, 40, 41, 42 and ground with CONSULT-II or tester.
   Refer to Wiring Diagram for Injectors, EC-662 .

   Voltage : Battery voltage

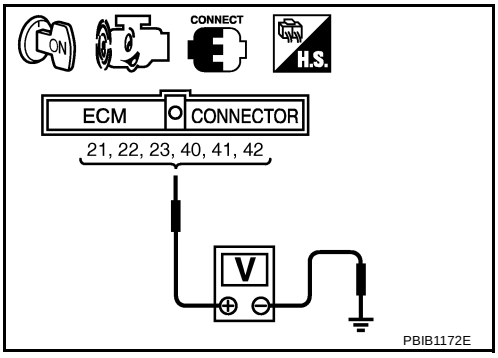

OK or NG

OK >> GO TO 6.
NG >> Perform EC-663, "Diagnostic Procedure" .

6. CHECK FUNCTION OF IGNITION COIL-I

CAUTION:
Do the following procedure in the place where ventilation is good without the combustible.

1. Turn ignition switch OFF.
2. Reconnect ECM harness connector disconnected.
3. Remove fuel pump fuse in IPDM E/R to release fuel pressure.

   NOTE:
   Do not use CONSULT-II to release fuel pressure, or fuel pressure applies again during the following procedure.

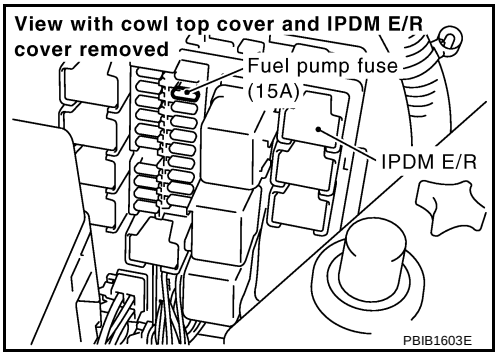

4. Start engine.
5. After engine stalls, crank it 2 or 3 times to release all fuel pressure.
6. Turn ignition switch OFF.
7. Remove all ignition coil harness connectors to avoid the electrical discharge from the ignition coils.
8. Remove ignition coil and spark plug of the cylinder to be checked.
9. Crank engine for 5 seconds or more to remove combustion gas in the cylinder.
10. Connect spark plug and harness connector to ignition coil.
11. Fix ignition coil using a rope etc. with gap of 13 - 17 mm between the edge of the spark plug and grounded metal portion as shown in the figure.
12. Crank engine for about 3 seconds, and check whether spark is generated between the spark plug and the grounded metal portion.

    Spark should be generated.

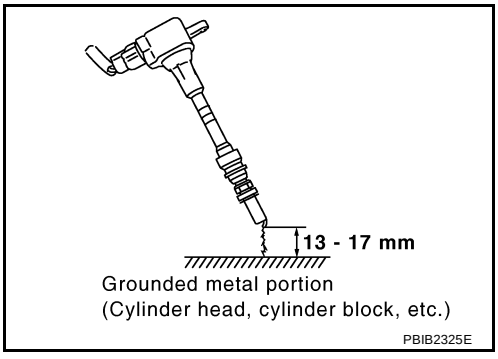

CAUTION:
- **Do not approach to the spark plug and the ignition coil within 50cm. Be careful not to get an electrical shock while checking, because the electrical discharge voltage becomes 20kV or more.**
- **It might cause to damage the ignition coil if the gap of 17 mm or more is taken.**

NOTE:
When the gap is 13 mm or less, the spark might be generated even if the coil is malfunctioning.

OK or NG

OK >> GO TO 10.
NG >> GO TO 7.

7. CHECK FUNCTION OF IGNITION COIL-II

1. Turn ignition switch OFF.
2. Disconnect spark plug and connect a known-good spark plug.
3. Crank engine for about 3 seconds, and recheck whether spark is generated between the spark plug and the grounded metal portion.

Spark should be generated.

OK or NG

OK >> GO TO 8.
NG >> Check ignition coil, power transistor and their circuits. Refer to EC-648, "IGNITION SIGNAL" .

8. CHECK SPARK PLUG

1. Turn ignition switch OFF.
2. Check the spark plugs and check for fouling, etc.

OK or NG

OK >> GO TO 9.
NG >> Repair or replace spark plug (s) with standard type one (s). For spark plug type ignition coil. Refer to MA-20, "Changing Spark Plugs (Platinum-Tipped Type)" .

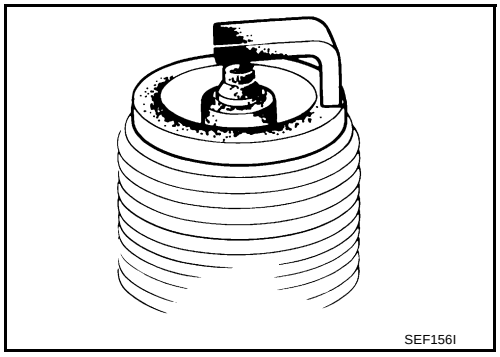

9. CHECK FUNCTION OF IGNITION COIL-III

1. Reconnect the initial spark plugs.
2. Crank engine for about 3 seconds, and recheck whether spark is generated between the spark plug and the grounded portion.

Spark should be generated.

OK or NG

OK >> **INSPECTION END**
NG >> Replace spark plug(s) with standard type one(s). For spark plug type, refer to MA-20, "Changing Spark Plugs (Platinum-Tipped Type)" .

10. CHECK FUEL INJECTOR

1. Turn ignition switch OFF.
2. Remove injector assembly.
   Refer to EM-45, "FUEL INJECTOR AND FUEL TUBE" .
   Keep fuel hose and all injectors connected to injector gallery.
3. Disconnect all ignition coil harness connectors.
4. Reconnect all injector harness connectors disconnected.
5. Turn ignition switch ON.
   Make sure fuel does not drip from injector.

OK or NG

OK (Does not drip.)>>GO TO 11.
NG (Drips.)>>Replace the injector(s) from which fuel is dripping.

11. CHECK INTERMITTENT INCIDENT

Refer to EC-163, "TROUBLE DIAGNOSIS FOR INTERMITTENT INCIDENT" .

Trouble is fixed.>>**INSPECTION END**
Trouble is not fixed.>>Replace three way catalyst assembly.

DTC P0441 EVAP CONTROL SYSTEM

PFP:14950

System Description

ABS006QL

NOTE:
If DTC P0441 is displayed with other DTC such as P2122, P2123, P2127, P2128 or P2138, first perform trouble diagnosis for other DTC.

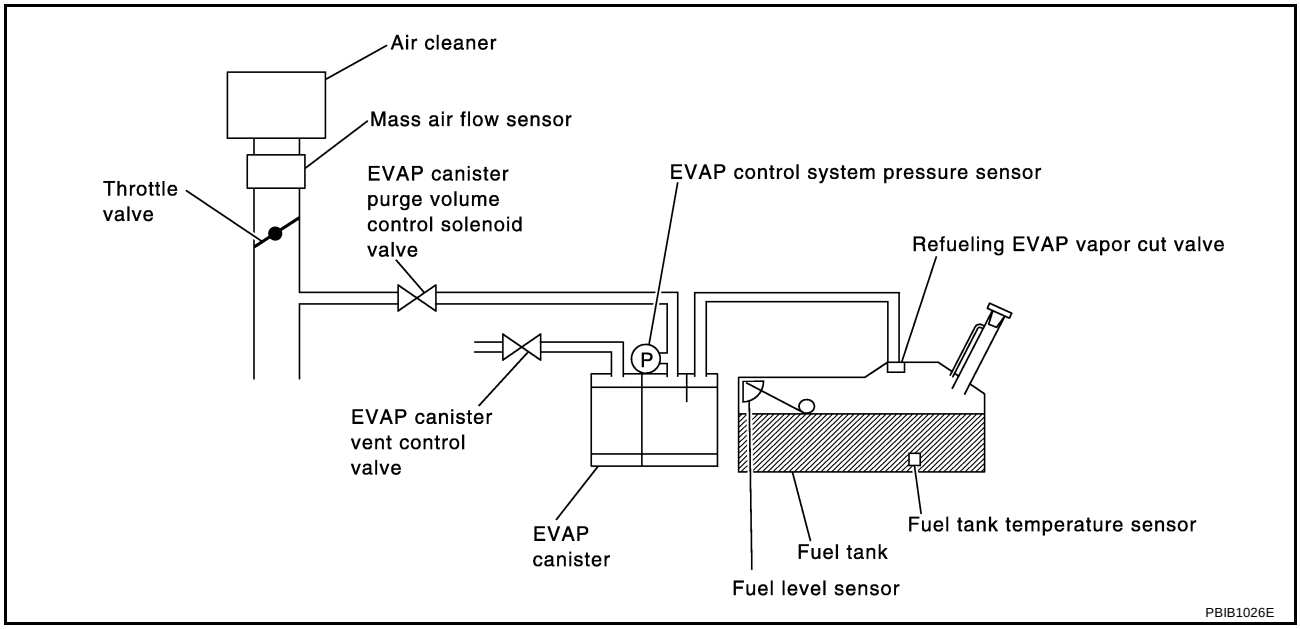

In this evaporative emission (EVAP) control system, purge flow occurs during non-closed throttle conditions. Purge volume is related to air intake volume. Under normal purge conditions (non-closed throttle), the EVAP canister purge volume control solenoid valve is open to admit purge flow. Purge flow exposes the EVAP control system pressure sensor to intake manifold vacuum.

On Board Diagnosis Logic

ABS006QM

Under normal conditions (non-closed throttle), sensor output voltage indicates if pressure drop and purge flow are adequate. If not, a malfunction is determined.

DTC No.	Trouble diagnosis name	DTC detecting condition	Possible cause
P0441 0441	EVAP control system incorrect purge flow	EVAP control system does not operate properly, EVAP control system has a leak between intake manifold and EVAP control system pressure sensor.	● EVAP canister purge volume control solenoid valve stuck closed ● EVAP control system pressure sensor and the circuit ● Loose, disconnected or improper connection of rubber tube ● Blocked rubber tube ● Cracked EVAP canister ● EVAP canister purge volume control solenoid valve circuit ● Accelerator pedal position sensor ● Blocked purge port ● EVAP canister vent control valve

DTC Confirmation Procedure

ABS006QN

CAUTION:
Always drive vehicle at a safe speed.

NOTE:
If DTC Confirmation Procedure has been previously conducted, always turn ignition switch OFF and wait at least 10 seconds before conducting the next test.

TESTING CONDITION:

Always perform test at a temperature of 5°C (41°F) or more.

WITH CONSULT-II

1. Start engine and warm it up to normal operating temperature.
2. Turn ignition switch OFF and wait at least 10 seconds.
3. Start engine and let it idle for at least 70 seconds.
4. Select “PURG FLOW P0441” of “EVAPORATIVE SYSTEM” in “DTC CONFIRMATION” mode with CONSULT-II.
5. Touch “START”.
   If “COMPLETED” is displayed, go to step 7.
6. When the following conditions are met, “TESTING” will be displayed on the CONSULT-II screen. Maintain the conditions continuously until “TESTING” changes to “COMPLETED”. (It will take at least 35 seconds.)

Selector lever	Suitable position
VHCL SPEED SE	32 - 120 km/h (20 - 75 MPH)
ENG SPEED	500 - 3,000 rpm
B/FUEL SCHDL	1.3 - 9.0 msec
COOLAN TEMP/S	70 - 100°C (158 - 212°F)

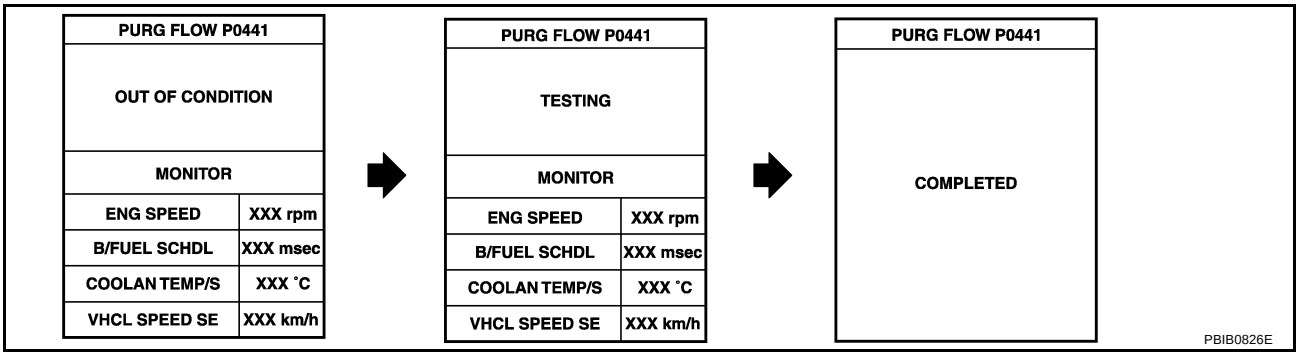

If “TESTING” is not changed for a long time, retry from step 2.

7. Make sure that “OK” is displayed after touching “SELF-DIAG RESULTS”. If “NG” is displayed, refer to EC-324, "Diagnostic Procedure" .

Overall Function Check

ABS006QO

Use this procedure to check the overall monitoring function of the EVAP control system purge flow monitoring. During this check, a 1st trip DTC might not be confirmed.

WITH GST

1. Lift up drive wheels.
2. Start engine (TCS switch or VDC switch OFF) and warm it up to normal operating temperature.
3. Turn ignition switch OFF, wait at least 10 seconds.
4. Start engine and wait at least 70 seconds.
5. Set voltmeter probes to ECM terminals 32 (EVAP control system pressure sensor signal) and ground.
6. Check EVAP control system pressure sensor value at idle speed and note it.
7. Establish and maintain the following conditions for at least 1 minute.

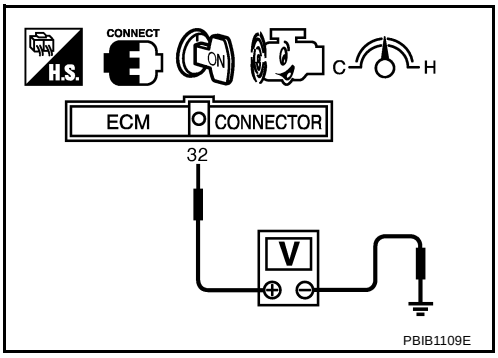

Air conditioner switch	ON
Headlamp switch	ON
Rear window defogger switch	ON
Engine speed	Approx. 3,000 rpm
Gear position	Any position other than P, N or R

8. Verify that EVAP control system pressure sensor value stays 0.1V less than the value at idle speed (measured at step 6) for at least 1 second.
9. If NG, go to EC-324, "Diagnostic Procedure" .

Diagnostic Procedure

ABS006QP

1. CHECK EVAP CANISTER

1. Turn ignition switch OFF.
2. Check EVAP canister for cracks.

OK or NG

OK (With CONSULT-II)>>GO TO 2.
OK (Without CONSULT-II)>>GO TO 3.
NG >> Replace EVAP canister.

2. CHECK PURGE FLOW

With CONSULT-II

1. Disconnect vacuum hose connected to EVAP canister purge volume control solenoid valve at EVAP service port and install vacuum gauge. For the location of EVAP service port, refer to EC-40, "EVAPORATIVE EMISSION LINE DRAWING" .
2. Start engine and let it idle.
3. Select “PURG VOL CONT/V” in “ACTIVE TEST” mode with CONSULT-II.
4. Rev engine up to 2,000 rpm.
5. Touch “Qd” and “Qu” on CONSULT-II screen to adjust “PURG VOL CONT/V” opening and check vacuum existence.

PURG VOL CONT/V	Vacuum
100%	Should exist.
0%	Should not exist.

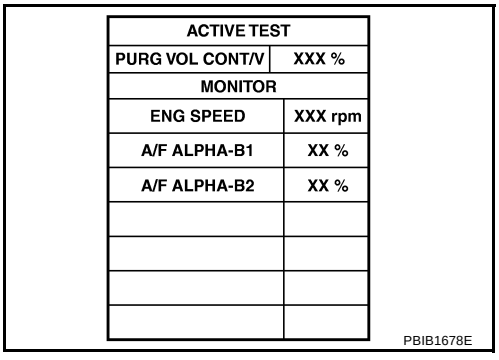

ACTIVE TEST	
PURG VOL CONT/V	XXX %
MONITOR	
ENG SPEED	XXX rpm
A/F ALPHA-B1	XX %
A/F ALPHA-B2	XX %

PBIB1678E

OK or NG

OK >> GO TO 7.
NG >> GO TO 4.

3. CHECK PURGE FLOW

Without CONSULT-II

1. Start engine and warm it up to normal operating temperature.
2. Stop engine.
3. Disconnect vacuum hose connected to EVAP canister purge volume control solenoid valve at EVAP service port and install vacuum gauge. For the location of EVAP service port, refer to EC-40, "EVAPORATIVE EMISSION LINE DRAWING" .
4. Start engine and let it idle.
   Do not depress accelerator pedal even slightly.
5. Check vacuum gauge indication before 60 seconds passed after starting engine.

   Vacuum should not exist.

6. Revving engine up to 2,000rpm after 100 seconds passed after starting engine.

   Vacuum should exist.

OK or NG

OK >> GO TO 7.
NG >> GO TO 4.

4. CHECK EVAP PURGE LINE

1. Turn ignition switch OFF.
2. Check EVAP purge line for improper connection or disconnection.
   Refer to EC-40, "EVAPORATIVE EMISSION LINE DRAWING" .

OK or NG

OK >> GO TO 5.
NG >> Repair it.

5. CHECK EVAP PURGE HOSE AND PURGE PORT

1. Disconnect purge hoses connected to EVAP service port **A** and EVAP canister purge volume control solenoid valve **B** .
2. Blow air into each hose and EVAP purge port **C** .

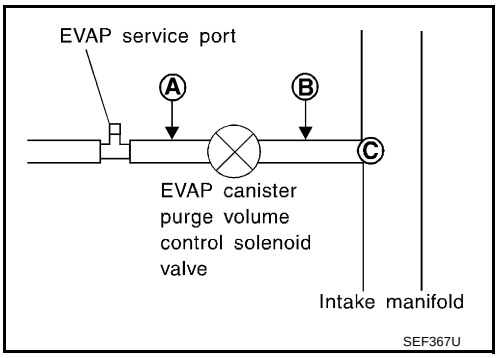

3. Check that air flows freely.

OK or NG

OK (With CONSULT-II)>>GO TO 6.
OK (Without CONSULT-II)>>GO TO 7.
NG >> Repair or clean hoses and/or purge port.

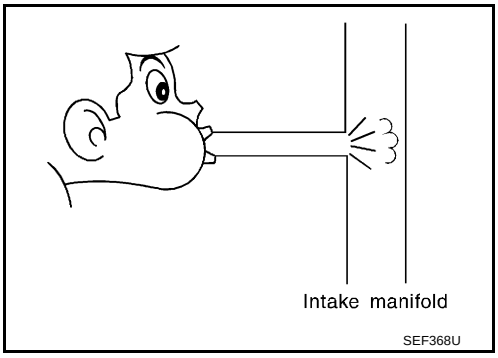

6. CHECK EVAP CANISTER PURGE VOLUME CONTROL SOLENOID VALVE

With CONSULT-II

1. Start engine.
2. Perform “PURG VOL CONT/V” in “ACTIVE TEST” mode with CONSULT-II. Check that engine speed varies according to the valve opening.

OK or NG

OK >> GO TO 8.
NG >> GO TO 7.

ACTIVE TEST	
PURG VOL CONT/V	XXX %
MONITOR	
ENG SPEED	XXX rpm
A/F ALPHA-B1	XX %
A/F ALPHA-B2	XX %

PBIB1678E

7. CHECK EVAP CANISTER PURGE VOLUME CONTROL SOLENOID VALVE

Refer to EC-341, "Component Inspection" .

OK or NG

OK >> GO TO 8.
NG >> Replace EVAP canister purge volume control solenoid valve.

8. CHECK EVAP CONTROL SYSTEM PRESSURE SENSOR CONNECTOR

1. Disconnect EVAP control system pressure sensor harness connector.
2. Check connectors for water.

Water should not exist.

OK or NG

OK >> GO TO 9.
NG >> Replace EVAP control system pressure sensor.

9. CHECK EVAP CONTROL SYSTEM PRESSURE SENSOR FUNCTION

Refer to DTC Confirmation Procedure for DTC P0452 EC-353 , P0453 EC-359 .

OK or NG

OK >> GO TO 10.
NG >> Replace EVAP control system pressure sensor.

10. CHECK RUBBER TUBE FOR CLOGGING

1. Disconnect rubber tube connected to EVAP canister vent control valve.
2. Check the rubber tube for clogging.

OK or NG

OK >> GO TO 11.
NG >> Clean the rubber tube using an air blower.

11. CHECK EVAP CANISTER VENT CONTROL VALVE

Refer to EC-348, "Component Inspection" .

OK or NG

OK >> GO TO 12.
NG >> Replace EVAP canister vent control valve.

12. CHECK EVAP PURGE LINE

Inspect EVAP purge line (pipe and rubber tube). Check for evidence of leaks.
Refer to EC-40, "EVAPORATIVE EMISSION LINE DRAWING" .

OK or NG

OK >> GO TO 13.
NG >> Replace it.

13. CLEAN EVAP PURGE LINE

Clean EVAP purge line (pipe and rubber tube) using air blower.

>> GO TO 14.

14. CHECK INTERMITTENT INCIDENT

Refer to EC-163, "TROUBLE DIAGNOSIS FOR INTERMITTENT INCIDENT" .

>> **INSPECTION END**

DTC P0442 EVAP CONTROL SYSTEM

PFP:14950

On Board Diagnosis Logic

ABS006QQ

This diagnosis detects leaks in the EVAP purge line using engine intake manifold vacuum.
If pressure does not increase, the ECM will check for leaks in the line between the fuel tank and EVAP canister purge volume control solenoid valve, under the following Vacuum test conditions.
The EVAP canister vent control valve is closed to shut the EVAP purge line off. The EVAP canister purge volume control solenoid valve will then be opened to depressurize the EVAP purge line using intake manifold vacuum. After this occurs, the EVAP canister purge volume control solenoid valve will be closed.

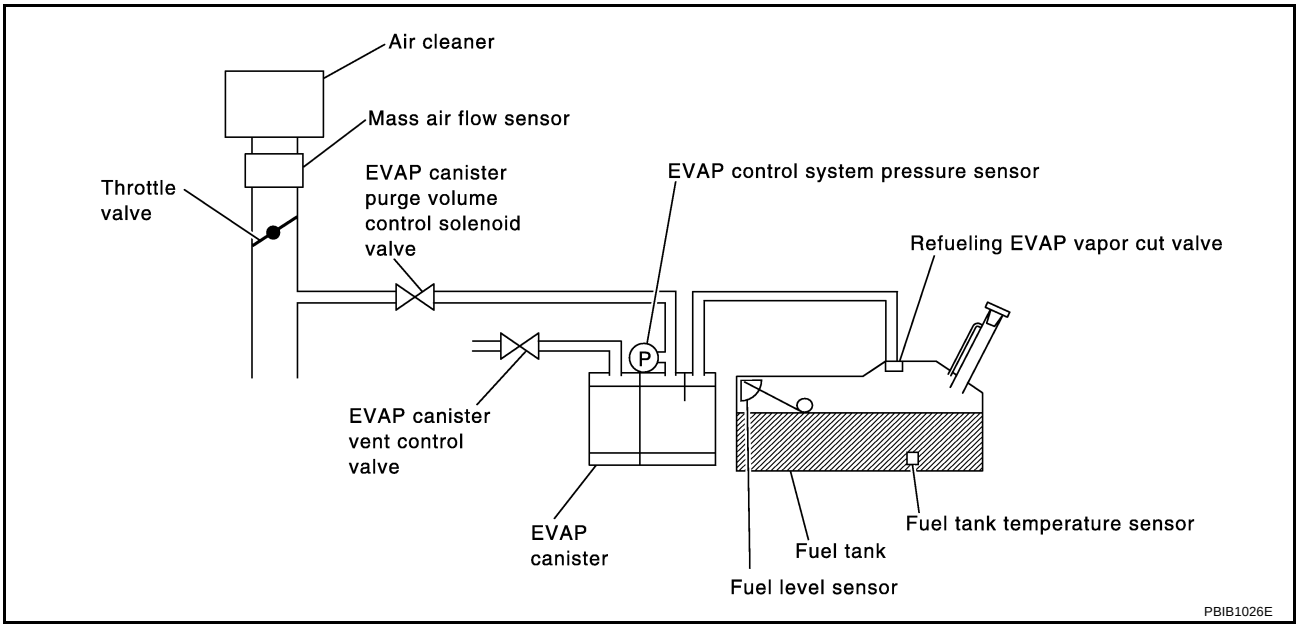

DTC No.	Trouble diagnosis name	DTC detecting condition	Possible cause
P0442 0442	EVAP control system small leak detected (negative pressure)	EVAP control system has a leak, EVAP control system does not operate properly.	● Incorrect fuel tank vacuum relief valve ● Incorrect fuel filler cap used ● Fuel filler cap remains open or fails to close. ● Foreign matter caught in fuel filler cap. ● Leak is in line between intake manifold and EVAP canister purge volume control solenoid valve. ● Foreign matter caught in EVAP canister vent control valve. ● EVAP canister or fuel tank leaks ● EVAP purge line (pipe and rubber tube) leaks ● EVAP purge line rubber tube bent ● Loose or disconnected rubber tube ● EVAP canister vent control valve and the circuit ● EVAP canister purge volume control solenoid valve and the circuit ● Fuel tank temperature sensor ● O-ring of EVAP canister vent control valve is missing or damaged ● EVAP canister is saturated with water ● EVAP control system pressure sensor ● Fuel level sensor and the circuit ● Refueling EVAP vapor cut valve ● ORVR system leaks

CAUTION:

- **Use only a genuine NISSAN fuel filler cap as a replacement. If an incorrect fuel filler cap is used, the MIL may come on.**
- **If the fuel filler cap is not tightened properly, the MIL may come on.**
- **Use only a genuine NISSAN rubber tube as a replacement.**

DTC Confirmation Procedure

ABS006QR

NOTE:

- If DTC Confirmation Procedure has been previously conducted, always turn ignition switch OFF and wait at least 10 seconds before conducting the next test.

TESTING CONDITION:

- **Perform "DTC WORK SUPPORT" when the fuel level is between 1/4 and 3/4 full, and vehicle is placed on flat level surface.**
- **Always perform test at a temperature of 0 to 30°C (32 to 86°F).**

WITH CONSULT-II

1. Turn ignition switch ON.
2. Turn ignition switch OFF and wait at least 10 seconds.
3. Turn ignition switch ON and select "DATA MONITOR" mode with CONSULT-II.
4. Make sure that the following conditions are met.
   COOLAN TEMP/S: 0 - 70°C (32 - 158°F)
   INT/A TEMP SE: 0 - 30°C (32 - 86°F)
5. Select "EVAP SML LEAK P0442/P1442" of "EVAPORATIVE SYSTEM" in "DTC WORK SUPPORT" mode with CONSULT-II.
   Follow the instruction displayed.

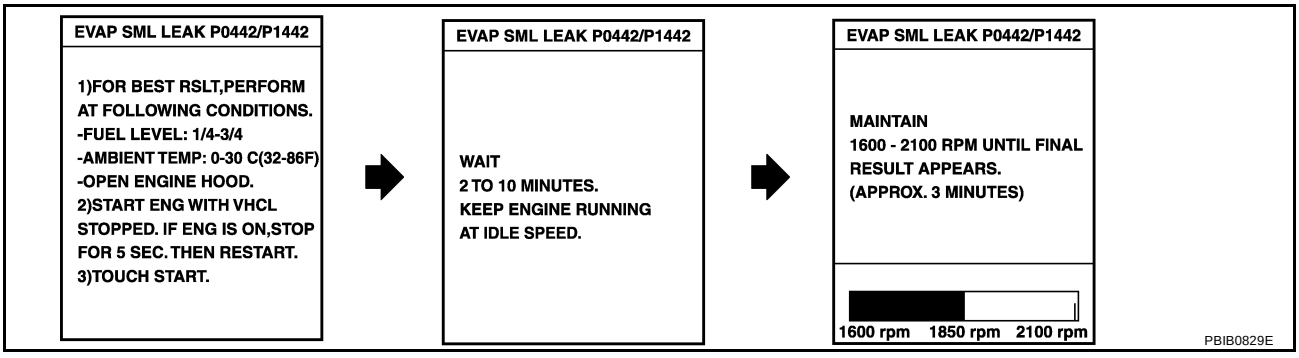

NOTE:
If the engine speed cannot be maintained within the range displayed on the CONSULT-II screen, go to EC-78, "Basic Inspection" .

6. Make sure that "OK" is displayed.
   If "NG" is displayed, refer to EC-329, "Diagnostic Procedure" .

   NOTE:
   Make sure that EVAP hoses are connected to EVAP canister purge volume control solenoid valve properly.

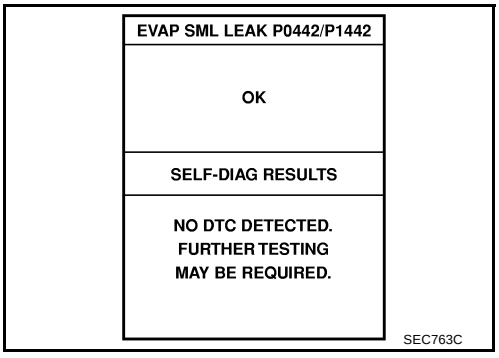

WITH GST

NOTE:
Be sure to read the explanation of EC-65, "Driving Pattern" before driving vehicle.

1. Start engine.
2. Drive vehicle according to EC-65, "Driving Pattern" .
3. Stop vehicle.

4. Turn ignition switch OFF, wait at least 10 seconds, and then turn ON.
5. Select Service $07 with GST.
- If P0442 is displayed on the screen, go to EC-329, "Diagnostic Procedure" .
- If P0441 is displayed on the screen, go to EC-324, "Diagnostic Procedure" .

Diagnostic Procedure

ABS006QS

1. CHECK FUEL FILLER CAP DESIGN

1. Turn ignition switch OFF.
2. Check for genuine NISSAN fuel filler cap design.

OK or NG

OK >> GO TO 2.
NG >> Replace with genuine NISSAN fuel filler cap.

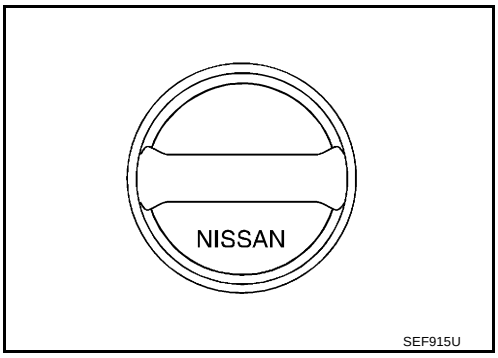

2. CHECK FUEL FILLER CAP INSTALLATION

Check that the cap is tightened properly by rotating the cap clockwise.

OK or NG

OK >> GO TO 3.
NG >> 1. Open fuel filler cap, then clean cap and fuel filler neck threads using air blower.
2. Retighten until ratcheting sound is heard.

3. CHECK FUEL FILLER CAP FUNCTION

Check for air releasing sound while opening the fuel filler cap.

OK or NG

OK >> GO TO 5.
NG >> GO TO 4.

4. CHECK FUEL TANK VACUUM RELIEF VALVE

Refer to EC-42, "FUEL TANK VACUUM RELIEF VALVE (BUILT INTO FUEL FULLER CAP)" .

OK or NG

OK >> GO TO 5.
NG >> Replace fuel filler cap with a genuine one.

5. INSTALL THE PRESSURE PUMP

To locate the EVAP leak, install EVAP service port adapter and pressure pump to EVAP service port securely. For the location of EVAP service port, refer to EC-40, "EVAPORATIVE EMISSION LINE DRAWING" .

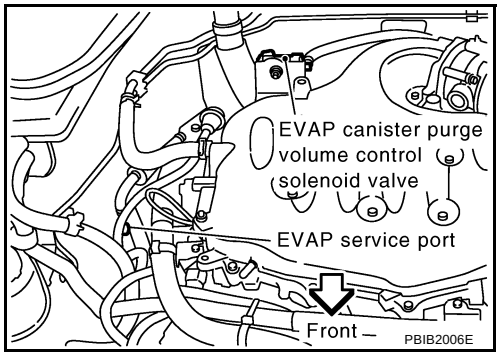

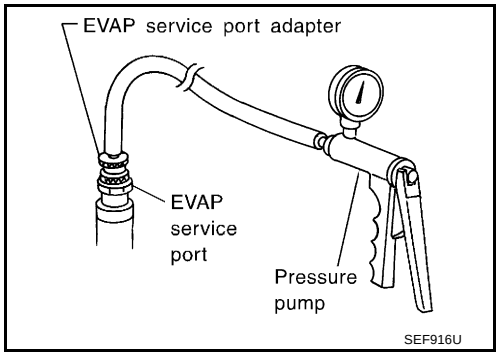

NOTE:
Improper installation of the EVAP service port adapter to the EVAP service port may cause leaking.

Models with CONSULT-II>>GO TO 6.
Models without CONSULT-II>>GO TO 7.

6. CHECK FOR EVAP LEAK

With CONSULT-II

1. Turn ignition switch ON.
2. Select “EVAP SYSTEM CLOSE” of “WORK SUPPORT” mode with CONSULT-II.
3. Touch “START” and apply pressure into the EVAP line until the pressure indicator reaches the middle of the bar graph.

   CAUTION:
   - **Never use compressed air or a high pressure pump.**
   - **Do not exceed 4.12 kPa (0.042 kg/cm^2 , 0.6 psi) of pressure in the system.**

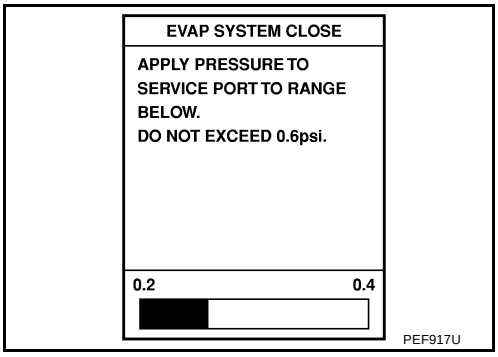

4. Using EVAP leak detector, locate the EVAP leak. For the leak detector, refer to the instruction manual for more details.
   Refer to EC-40, "EVAPORATIVE EMISSION LINE DRAWING" .

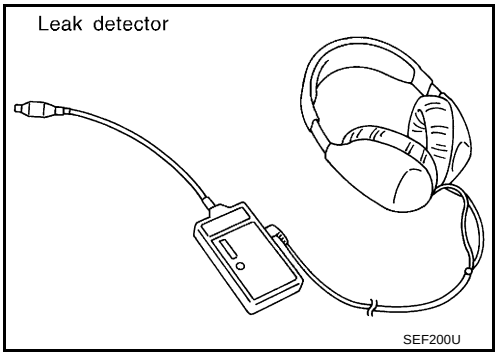

OK or NG

OK >> GO TO 8.
NG >> Repair or replace.

7. CHECK FOR EVAP LEAK

Without CONSULT-II

1. Turn ignition switch OFF.
2. Apply 12 volts DC to EVAP canister vent control valve. The valve will close. (Continue to apply 12 volts until the end of test.)

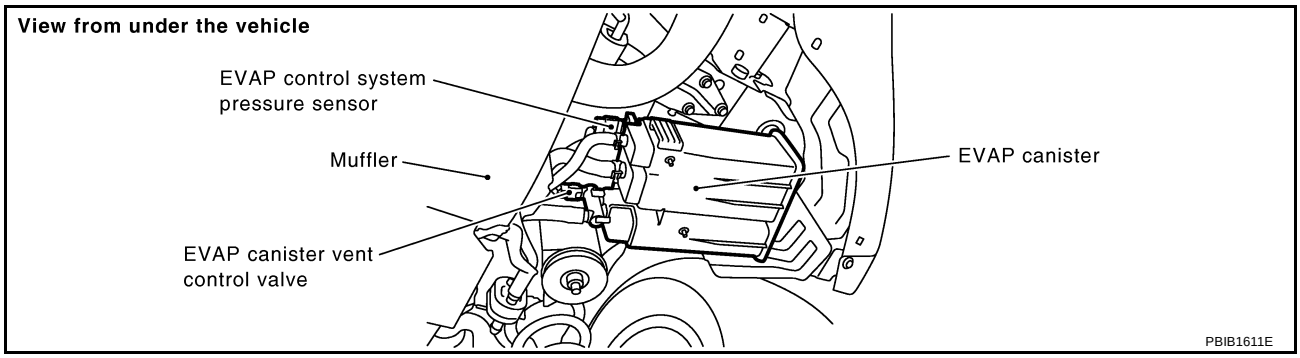

3. Pressurize the EVAP line using pressure pump with 1.3 to 2.7 kPa (10 to 20 mmHg, 0.39 to 0.79 inHg), then remove pump and EVAP service port adapter.

   CAUTION:
   - **Never use compressed air or a high pressure pump.**
   - **Do not exceed 4.12 kPa (0.042 kg/cm^2 , 0.6 psi) of pressure in the system.**
4. Using EVAP leak detector, locate the EVAP leak. For the leak detector, refer to the instruction manual for more details. Refer to EC-40, "EVAPORATIVE EMISSION LINE DRAWING" .

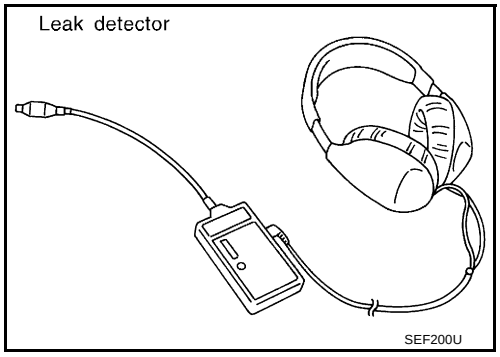

OK or NG

OK >> GO TO 8.
NG >> Repair or replace.

8. CHECK EVAP CANISTER VENT CONTROL VALVE

Check the following.

- EVAP canister vent control valve is installed properly.
  Refer to EC-43, "Removal and Installation" .
- EVAP canister vent control valve.
  Refer to EC-348, "Component Inspection" .

OK or NG

OK >> GO TO 9.
NG >> Repair or replace EVAP canister vent control valve and O-ring.

9. CHECK IF EVAP CANISTER SATURATED WITH WATER

1. Remove EVAP canister with EVAP canister vent control valve and EVAP control system pressure sensor attached.
2. Does water drain from the EVAP canister?

Yes or No

Yes >> GO TO 10.
No (With CONSULT-II)>>GO TO 12.
No (Without CONSULT-II)>>GO TO 13.

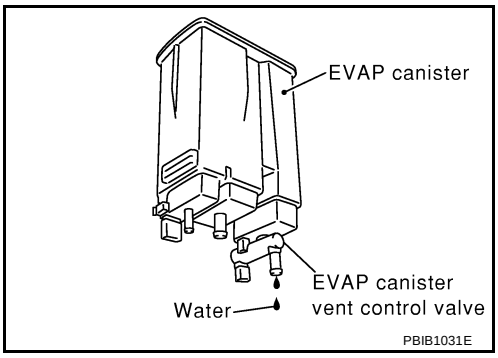

10. CHECK EVAP CANISTER

Weigh the EVAP canister with the EVAP canister vent control valve and EVAP control system pressure sensor attached.

The weight should be less than 2.1 kg (4.6 lb).

OK or NG

OK (With CONSULT-II)>>GO TO 12.
OK (Without CONSULT-II)>>GO TO 13.
NG >> GO TO 11.

11. DETECT MALFUNCTIONING PART

Check the following.

- EVAP canister for damage
- EVAP hose between EVAP canister and vehicle frame for clogging or poor connection

>> Repair hose or replace EVAP canister.

12. CHECK EVAP CANISTER PURGE VOLUME CONTROL SOLENOID VALVE OPERATION

With CONSULT-II

1. Disconnect vacuum hose to EVAP canister purge volume control solenoid valve at EVAP service port.
2. Start engine.
3. Perform “PURG VOL CONT/V” in “ACTIVE TEST” mode.
4. Touch “Qu” on CONSULT-II screen to increase “PURG VOL CONT/V” opening to 100%.
5. Check vacuum hose for vacuum when revving engine up to 2,000 rpm.

OK or NG

OK >> GO TO 15.
NG >> GO TO 14.

ACTIVE TEST	
PURG VOL CONT/V	XXX %
MONITOR	
ENG SPEED	XXX rpm
A/F ALPHA-B1	XX %
A/F ALPHA-B2	XX %

PBIB1678E

13. CHECK EVAP CANISTER PURGE VOLUME CONTROL SOLENOID VALVE OPERATION

Without CONSULT-II

1. Start engine and warm it up to normal operating temperature.
2. Stop engine.
3. Disconnect vacuum hose to EVAP canister purge volume control solenoid valve at EVAP service port.
4. Start engine and let it idle for at least 80 seconds.
5. Check vacuum hose for vacuum when revving engine up to 2,000 rpm.

OK or NG

OK >> GO TO 16.
NG >> GO TO 14.

14. CHECK VACUUM HOSE

Check vacuum hoses for clogging or disconnection. Refer to EC-120, "Vacuum Hose Drawing" .

OK or NG

OK >> GO TO 15.
NG >> Repair or reconnect the hose.

15. CHECK EVAP CANISTER PURGE VOLUME CONTROL SOLENOID VALVE

Refer to EC-341, "Component Inspection" .

OK or NG

OK >> GO TO 16.
NG >> Replace EVAP canister purge volume control solenoid valve.

16. CHECK FUEL TANK TEMPERATURE SENSOR

Refer to EC-271, "Component Inspection" .

OK or NG

OK >> GO TO 17.
NG >> Replace fuel level sensor unit.

17. CHECK EVAP CONTROL SYSTEM PRESSURE SENSOR

Refer to EC-358, "Component Inspection" .

OK or NG

OK >> GO TO 18.
NG >> Replace EVAP control system pressure sensor.

18. CHECK EVAP PURGE LINE

Check EVAP purge line (pipe, rubber tube, fuel tank and EVAP canister) for cracks or improper connection. Refer to EC-40, "EVAPORATIVE EMISSION LINE DRAWING" .

OK or NG

OK >> GO TO 19.
NG >> Repair or reconnect the hose.

19. CLEAN EVAP PURGE LINE

Clean EVAP purge line (pipe and rubber tube) using air blower.

>> GO TO 20.

20. CHECK EVAP/ORVR LINE

Check EVAP/ORVR line between EVAP canister and fuel tank for clogging, kink, looseness and improper connection. For location, refer to EC-46, "ON BOARD REFUELING VAPOR RECOVERY (ORVR)" .

OK or NG

OK >> GO TO 21.
NG >> Repair or replace hoses and tubes.

21. CHECK RECIRCULATION LINE

Check recirculation line between filler neck tube and fuel tank for clogging, kink, cracks, looseness and improper connection.

OK or NG

OK >> GO TO 22.
NG >> Repair or replace hose, tube or filler neck tube.

22. CHECK REFUELING EVAP VAPOR CUT VALVE

Refer to EC-49, "Component Inspection" .

OK or NG

OK >> GO TO 23.
NG >> Replace refueling EVAP vapor cut valve with fuel tank.

23. CHECK FUEL LEVEL SENSOR

Refer to DI-25, "CHECK FUEL LEVEL SENSOR UNIT" .

OK or NG

OK >> GO TO 24.
NG >> Replace fuel level sensor unit.

24. CHECK INTERMITTENT INCIDENT

Refer to EC-163, "TROUBLE DIAGNOSIS FOR INTERMITTENT INCIDENT" .

>> **INSPECTION END**

DTC P0444, P0445 EVAP CANISTER PURGE VOLUME CONTROL SOLENOID VALVE

PFP:14920

Description

ABS006QT

SYSTEM DESCRIPTION

Sensor	Input signal to ECM	ECM function	Actuator
Crankshaft position sensor (POS) Camshaft position sensor (PHASE)	Engine speed*1	EVAP canister purge flow control	EVAP canister purge volume control solenoid valve
Mass air flow sensor	Amount of intake air		
Engine coolant temperature sensor	Engine coolant temperature		
Battery	Battery voltage*1		
Throttle position sensor	Throttle position		
Accelerator pedal position sensor	Accelerator pedal position		
Air fuel ratio (A/F) sensor 1	Density of oxygen in exhaust gas (Mixture ratio feedback signal)		
Fuel tank temperature sensor	Fuel temperature in fuel tank		
Wheel sensor*2	Vehicle speed		

*1: ECM determines the start signal status by the signals of engine speed and battery voltage.
*2: This signal is sent to the ECM through CAN communication line.

This system controls flow rate of fuel vapor from the EVAP canister. The opening of the vapor by-pass passage in the EVAP canister purge volume control solenoid valve changes to control the flow rate. The EVAP canister purge volume control solenoid valve repeats ON/OFF operation according to the signal sent from the ECM. The opening of the valve varies for optimum engine control. The optimum value stored in the ECM is determined by considering various engine conditions. When the engine is operating, the flow rate of fuel vapor from the EVAP canister is regulated as the air flow changes.

COMPONENT DESCRIPTION

The EVAP canister purge volume control solenoid valve uses a ON/OFF duty to control the flow rate of fuel vapor from the EVAP canister. The EVAP canister purge volume control solenoid valve is moved by ON/OFF pulses from the ECM. The longer the ON pulse, the greater the amount of fuel vapor that will flow through the valve.

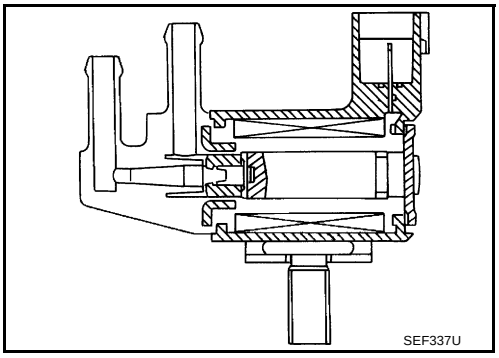

CONSULT-II Reference Value in Data Monitor Mode

ABS006QU

Specification data are reference values.

MONITOR ITEM	CONDITION		SPECIFICATION
PURG VOL C/V	● Engine: After warming up ● Selector lever: P or N ● Air conditioner switch: OFF ● No-load	Idle (Accelerator pedal is not depressed even slightly, after engine starting)	0%
		2,000 rpm	—

On Board Diagnosis Logic

ABS006QV

DTC No.	Trouble diagnosis name	DTC detecting condition	Possible cause
P0444 0444	EVAP canister purge volume control solenoid valve circuit open	An excessively low voltage signal is sent to ECM through the valve	● Harness or connectors (The solenoid valve circuit is open or shorted.) ● EVAP canister purge volume control solenoid valve
P0445 0445	EVAP canister purge volume control solenoid valve circuit shorted	An excessively high voltage signal is sent to ECM through the valve	● Harness or connectors (The solenoid valve circuit is shorted.) ● EVAP canister purge volume control solenoid valve

DTC Confirmation Procedure

ABS006QW

NOTE:
If DTC Confirmation Procedure has been previously conducted, always turn ignition switch OFF and wait at least 10 seconds before conducting the next test.

TESTING CONDITION:
Before performing the following procedure, confirm battery voltage is more than 11V at idle.

WITH CONSULT-II

1. Turn ignition switch ON.
2. Select “DATA MONITOR” mode with CONSULT-II.
3. Start engine and let it idle for at least 13 seconds.
4. If 1st trip DTC is detected, go to EC-340, "Diagnostic Procedure"
.

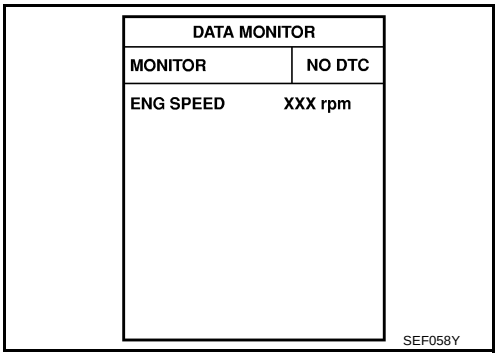

WITH GST

Follow the procedure “WITH CONSULT-II” above.

Wiring Diagram

ABS006QX

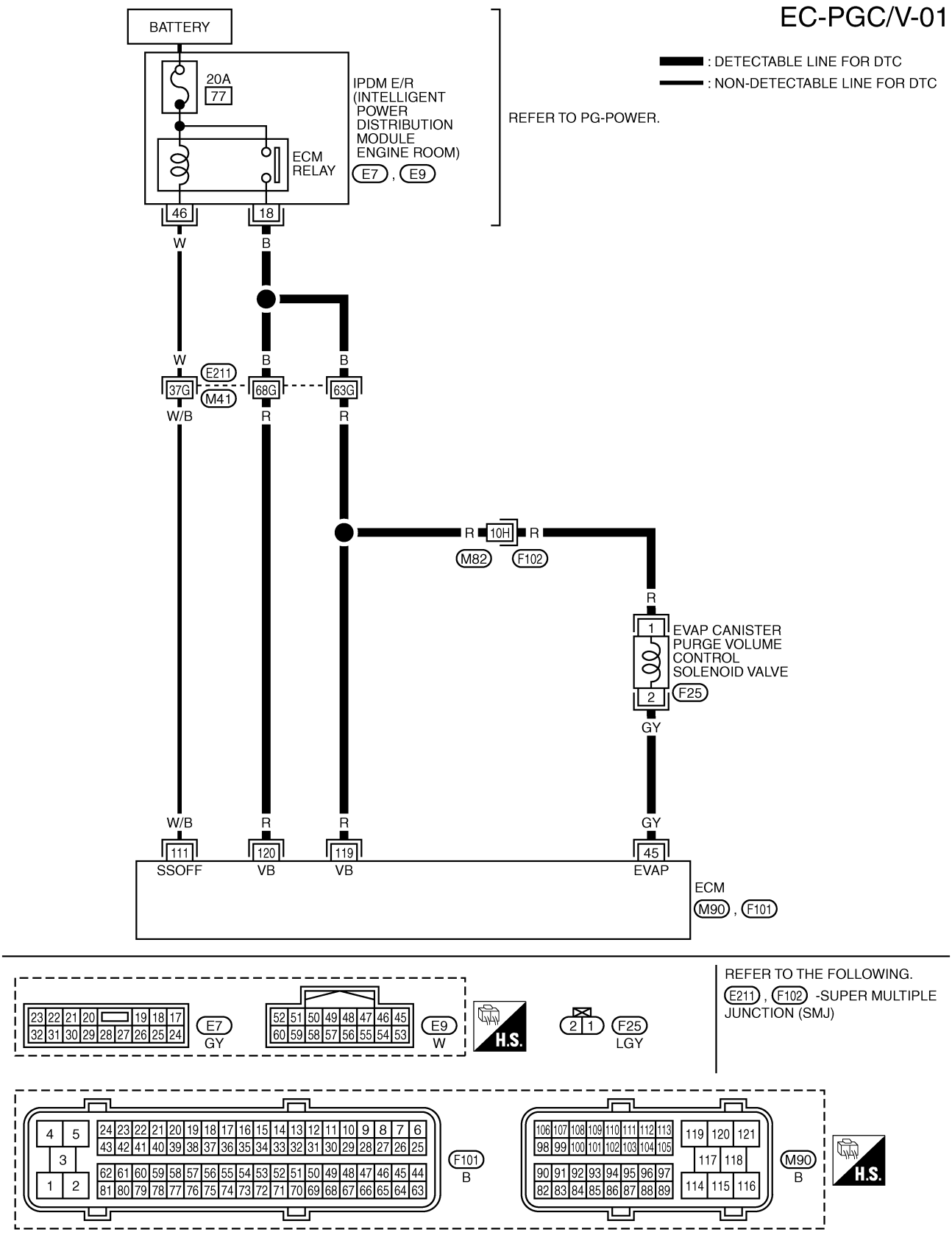

Specification data are reference values and are measured between each terminal and ground.
Pulse signal is measured by CONSULT-II.

CAUTION:

Do not use ECM ground terminals when measuring input/output voltage. Doing so may result in damage to the ECM's transistor. Use a ground other than ECM terminals, such as the ground.

TERMINAL NO.	WIRE COLOR	ITEM	CONDITION	DATA (DC Voltage)
45	GY	EVAP canister purge volume control solenoid valve	**[Engine is running]** ● Idle speed ● Accelerator pedal is not depressed even slightly, after engine starting	BATTERY VOLTAGE (11 - 14V)★ 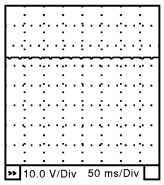 SEC990C
			[Engine is running] ● Engine speed is about 2,000 rpm (More than 100 seconds after starting engine)	BATTERY VOLTAGE (11 - 14V)★ 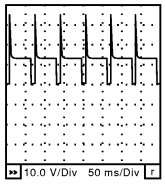 SEC991C
111	W/B	ECM relay (Self shut-off)	**[Engine is running]** **[Ignition switch: OFF]** ● For a few seconds after turning ignition switch OFF	0 - 1.5V
			[Ignition switch: OFF] ● More than a few seconds after turning ignition switch OFF	BATTERY VOLTAGE (11 - 14V)
119 120	R R	Power supply for ECM	**[Ignition switch: ON]**	BATTERY VOLTAGE (11 - 14V)

★: Average voltage for pulse signal (Actual pulse signal can be confirmed by oscilloscope.)

Diagnostic Procedure

ABS006QY

1. CHECK EVAP CANISTER PURGE VOLUME CONTROL SOLENOID VALVE POWER SUPPLY CIRCUIT

1. Turn ignition switch OFF.
2. Disconnect EVAP canister purge volume control solenoid valve harness connector.
3. Turn ignition switch ON.

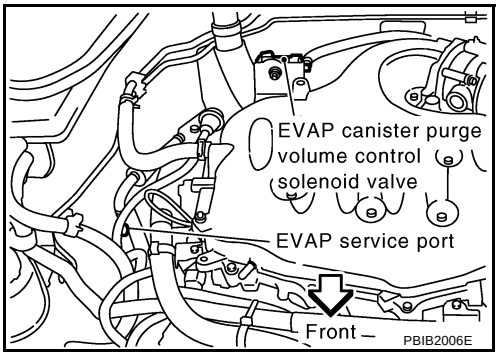

4. Check voltage between EVAP canister purge volume control solenoid valve terminal 1 and ground with CONSULT-II or tester.

Voltage: Battery voltage

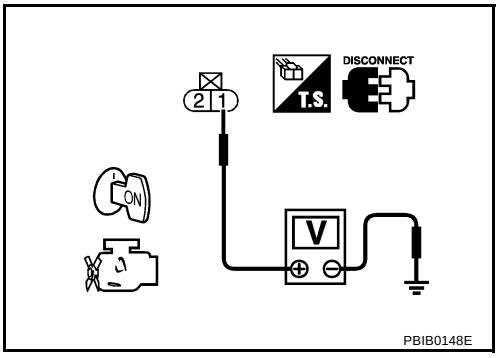

OK or NG

OK >> GO TO 3.
NG >> GO TO 2.

2. DETECT MALFUNCTIONING PART

Check the following.

- Harness connectors E211, M41
- Harness connectors M82, F102
- IPDM E/R harness connector E7
- 20A fuse
- Harness for open or short between EVAP canister purge volume control solenoid valve and IPDM E/R
- Harness for open or short between EVAP canister purge volume control solenoid valve and ECM

>> Repair open circuit or short to ground or short to power in harness or connectors.

3. CHECK EVAP CANISTER PURGE VOLUME CONTROL SOLENOID VALVE OUTPUT SIGNAL CIRCUIT FOR OPEN AND SHORT

1. Turn ignition switch OFF.
2. Disconnect ECM harness connector.
3. Check harness continuity between ECM terminal 45 and EVAP canister purge volume control solenoid valve terminal 2. Refer to Wiring Diagram.

Continuity should exist.

4. Also check harness for short to ground and short to power.

OK or NG

OK (With CONSULT-II)>>GO TO 4.
OK (Without CONSULT-II)>>GO TO 5.
NG >> Repair open circuit or short to ground or short to power in harness or connectors.

4. CHECK EVAP CANISTER PURGE VOLUME CONTROL SOLENOID VALVE OPERATION

With CONSULT-II

1. Reconnect all harness connectors disconnected.
2. Start engine.
3. Perform “PURG VOL CONT/V” in “ACTIVE TEST” mode with CONSULT-II. Check that engine speed varies according to the valve opening.

OK or NG

OK >> GO TO 6.
NG >> GO TO 5.

ACTIVE TEST	
PURG VOL CONT/V	XXX %
MONITOR	
ENG SPEED	XXX rpm
A/F ALPHA-B1	XX %
A/F ALPHA-B2	XX %

PBIB1678E

5. CHECK EVAP CANISTER PURGE VOLUME CONTROL SOLENOID VALVE

Refer to EC-341, "Component Inspection" .

OK or NG

OK >> GO TO 6.
NG >> Replace EVAP canister purge volume control solenoid valve.

6. CHECK INTERMITTENT INCIDENT

Refer to EC-163, "TROUBLE DIAGNOSIS FOR INTERMITTENT INCIDENT" .

>> **INSPECTION END**

Component Inspection

ABS006QZ

EVAP CANISTER PURGE VOLUME CONTROL SOLENOID VALVE

With CONSULT-II

Check air passage continuity of EVAP canister purge volume control solenoid valve under the following conditions.

Condition (PURG VOL CONT/V value)	Air passage continuity between A and B
100%	Yes
0%	No

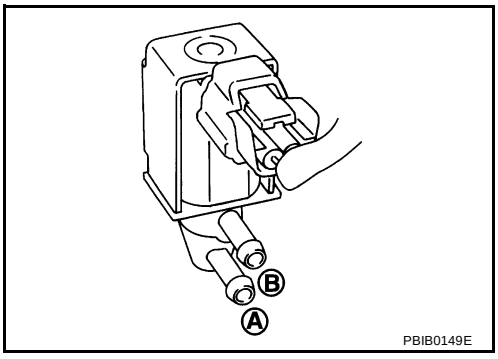

PBIB0149E

Without CONSULT-II

Check air passage continuity of EVAP canister purge volume control solenoid valve under the following conditions.

Condition	Air passage continuity between A and B
12V direct current supply between terminals 1 and 2	Yes
No supply	No

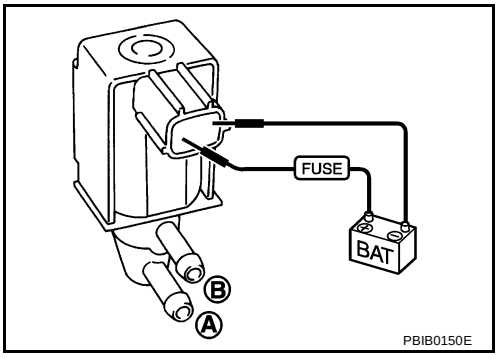

PBIB0150E

Removal and Installation

ABS006R0

EVAP CANISTER PURGE VOLUME CONTROL SOLENOID VALVE

Refer to EM-19, "INTAKE MANIFOLD COLLECTOR" .

DTC P0447 EVAP CANISTER VENT CONTROL VALVE

PFP:14935

Component Description

ABS006R1

The EVAP canister vent control valve is located on the EVAP canister and is used to seal the canister vent.
This solenoid valve responds to signals from the ECM. When the ECM sends an ON signal, the coil in the solenoid valve is energized. A plunger will then move to seal the canister vent. The ability to seal the vent is necessary for the on board diagnosis of other evaporative emission control system components.
This solenoid valve is used only for diagnosis, and usually remains opened.
When the vent is closed, under normal purge conditions, the evaporative emission control system is depressurized and allows EVAP Control System diagnosis.

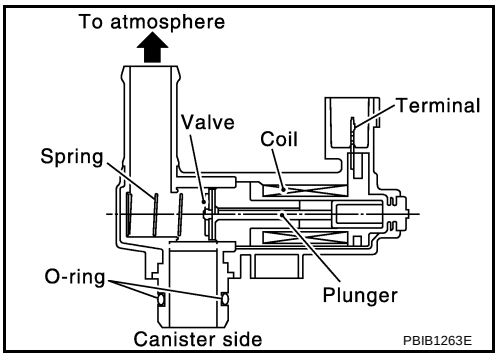

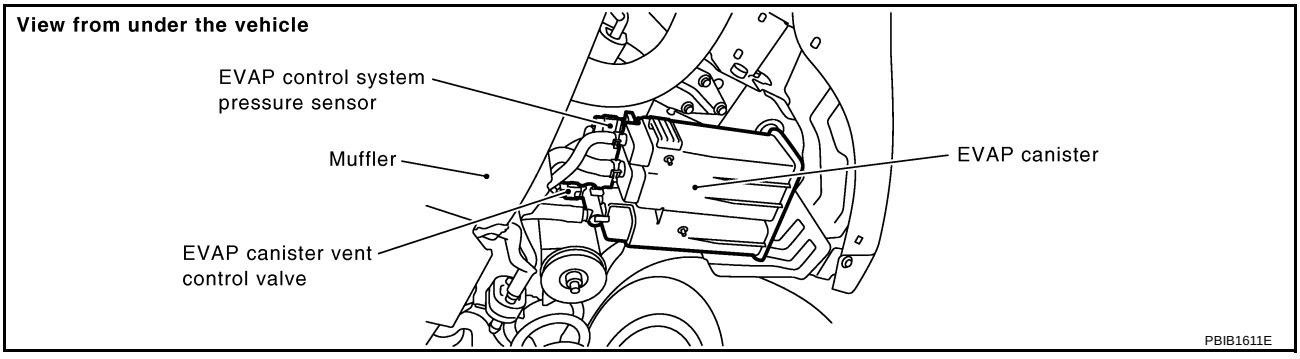

CONSULT-II Reference Value in Data Monitor Mode

ABS006R2

Specification data are reference values.

MONITOR ITEM	CONDITION	SPECIFICATION
VENT CONT/V	● Ignition switch: ON	OFF

On Board Diagnosis Logic

ABS006R3

DTC No.	Trouble diagnosis name	DTC detecting condition	Possible cause
P0447 0447	EVAP canister vent control valve circuit open	An improper voltage signal is sent to ECM through EVAP canister vent control valve.	● Harness or connectors (The valve circuit is open or shorted.) ● EVAP canister vent control valve

DTC Confirmation Procedure

ABS006R4

NOTE:
If DTC Confirmation Procedure has been previously conducted, always turn ignition switch OFF and wait at least 10 seconds before conducting the next test.
TESTING CONDITION:
Before performing the following procedure, confirm battery voltage is more than 11V at idle.

WITH CONSULT-II

1. Turn ignition switch ON.
2. Select “DATA MONITOR” mode with CONSULT-II.
3. Start engine and wait at least 8 seconds.
4. If 1st trip DTC is detected, go to EC-346, "Diagnostic Procedure"
.

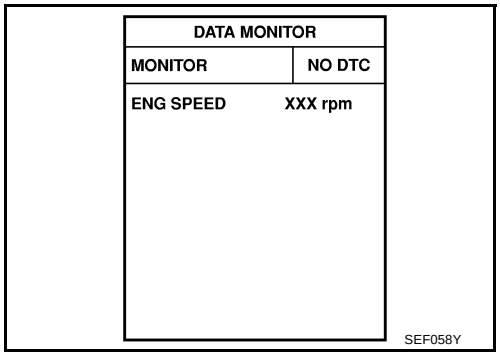

WITH GST

Follow the procedure “WITH CONSULT-II” above.

Wiring Diagram

ABS006R5

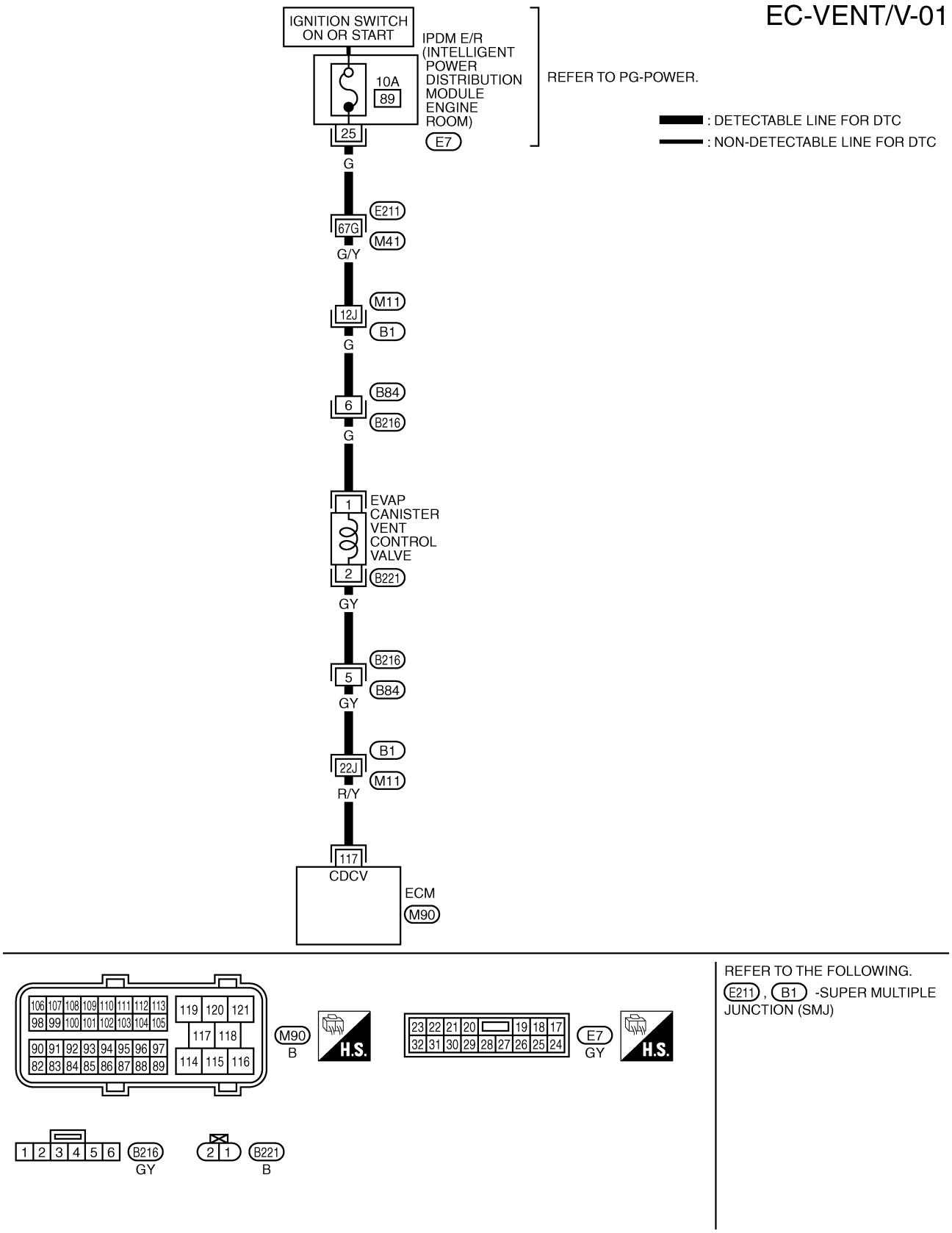

TBWH0110E

Specification data are reference values and are measured between each terminal and ground.

CAUTION:

Do not use ECM ground terminals when measuring input/output voltage. Doing so may result in damage to the ECM's transistor. Use a ground other than ECM terminals, such as the ground.

TERMINAL NO.	WIRE COLOR	ITEM	CONDITION	DATA (DC Voltage)
117	R/Y	EVAP canister vent control valve	**[Ignition switch: ON]**	BATTERY VOLTAGE (11 - 14V)

Diagnostic Procedure

ABS006R6

1. INSPECTION START

Do you have CONSULT-II?

Yes or No

Yes >> GO TO 2.
No >> GO TO 3.

2. CHECK EVAP CANISTER VENT CONTROL VALVE CIRCUIT

With CONSULT-II

1. Turn ignition switch OFF and then turn ON.
2. Select “VENT CONTROL/V” in “ACTIVE TEST” mode with CONSULT-II.
3. Touch “ON/OFF” on CONSULT-II screen.
4. Check for operating sound of the valve.
   Clicking noise should be heard.

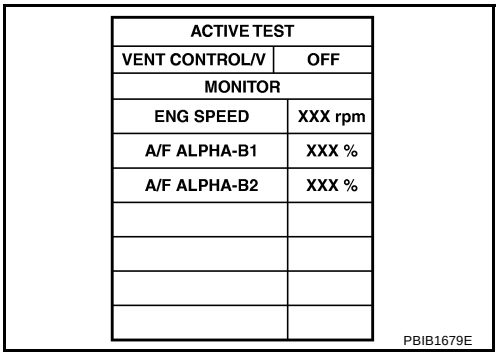

ACTIVE TEST	
VENT CONTROL/V	OFF
MONITOR	
ENG SPEED	XXX rpm
A/F ALPHA-B1	XXX %
A/F ALPHA-B2	XXX %

PBIB1679E

OK or NG

OK >> GO TO 7.
NG >> GO TO 3.

3. CHECK EVAP CANISTER VENT CONTROL VALVE POWER SUPPLY CIRCUIT

1. Turn ignition switch OFF.
2. Disconnect EVAP canister vent control valve harness connector.

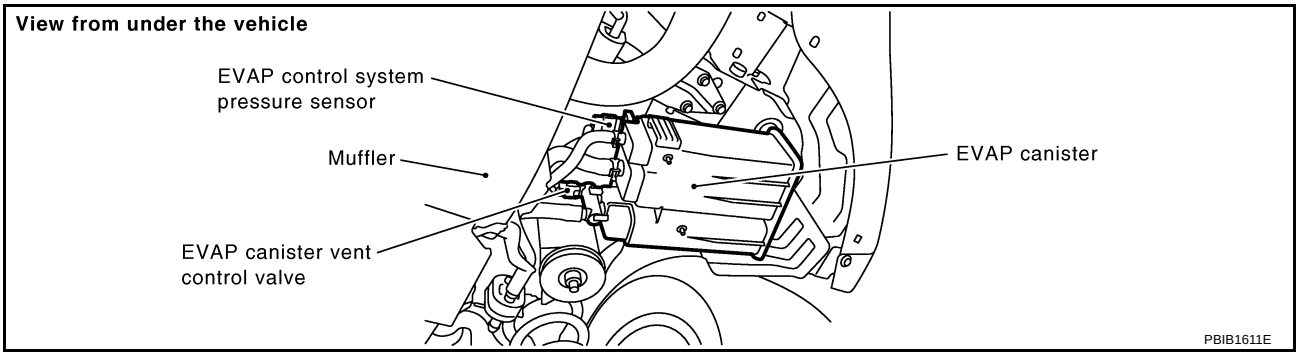

3. Turn ignition switch ON.
4. Check voltage between EVAP canister vent control valve terminal 1 and ground with CONSULT-II or tester.

Voltage: Battery voltage

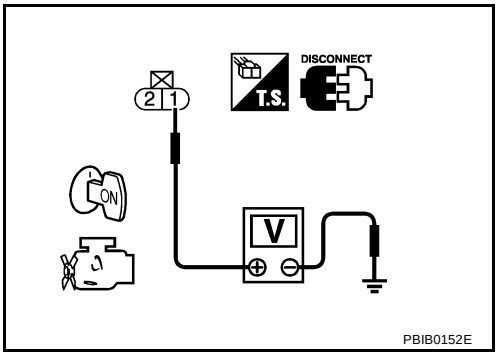

OK or NG

OK >> GO TO 5.
NG >> GO TO 4.

4. DETECT MALFUNCTIONING PART

Check the following.

- Harness connectors E211, M41
- Harness connectors M11, B1
- Harness connectors B84, B216
- IPDM E/R harness connector E7
- 10A fuse
- Harness for open or short between EVAP canister vent control valve and IPDM E/R

>> Repair open circuit or short to ground or short to power in harness or connectors.

5. CHECK EVAP CANISTER VENT CONTROL VALVE OUTPUT SIGNAL CIRCUIT FOR OPEN AND SHORT

1. Turn ignition switch OFF.
2. Disconnect ECM harness connector.
3. Check harness continuity between ECM terminal 117 and EVAP canister vent control valve terminal 2. Refer to Wiring Diagram.

Continuity should exist.

4. Also check harness for short to ground and short to power.

OK or NG

OK >> GO TO 7.
NG >> GO TO 6.

6. DETECT MALFUNCTIONING PART

Check the following.

- Harness connectors M11, B1
- Harness connectors B84, B216
- Harness for open or short between EVAP canister vent control valve and ECM

>> Repair open circuit or short to ground or short to power in harness or connectors.

7. CHECK RUBBER TUBE FOR CLOGGING

1. Disconnect rubber tube connected to EVAP canister vent control valve.
2. Check the rubber tube for clogging.

OK or NG

OK >> GO TO 8.
NG >> Clean the rubber tube using an air blower.

8. CHECK EVAP CANISTER VENT CONTROL VALVE

Refer to EC-348, "Component Inspection" .

OK or NG

OK >> GO TO 9.
NG >> Replace EVAP canister vent control valve.

9. CHECK INTERMITTENT INCIDENT

Refer to EC-163, "TROUBLE DIAGNOSIS FOR INTERMITTENT INCIDENT" .

>> **INSPECTION END**

Component Inspection

ABS006R7

EVAP CANISTER VENT CONTROL VALVE

With CONSULT-II

1. Remove EVAP canister vent control valve from EVAP canister.
2. Check portion **B** of EVAP canister vent control valve for being rusted.
   If NG, replace EVAP canister vent control valve.
   If OK, go to next step.
3. Reconnect harness connectors disconnected.
4. Turn ignition switch ON.

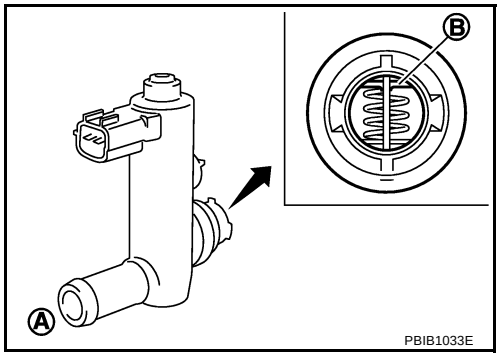

5. Perform “VENT CONTROL/V” in “ACTIVE TEST” mode.
6. Check air passage continuity and operation delay time.
   Make sure new O-ring is installed properly.

Condition VENT CONTROL/V	Air passage continuity between A and B
ON	No
OFF	Yes

Operation takes less than 1 second.

If NG, replace EVAP canister vent control valve.
If OK, go to next step.

ACTIVE TEST	
VENT CONTROL/V	OFF
MONITOR	
ENG SPEED	XXX rpm
A/F ALPHA-B1	XXX %
A/F ALPHA-B2	XXX %

PBIB1679E

7. Clean the air passage (portion **A** to **B**) of EVAP canister vent control valve using an air blower.
8. Perform step 6 again.

Without CONSULT-II

1. Remove EVAP canister vent control valve from EVAP canister.
2. Check portion **B** of EVAP canister vent control valve for being rusted.

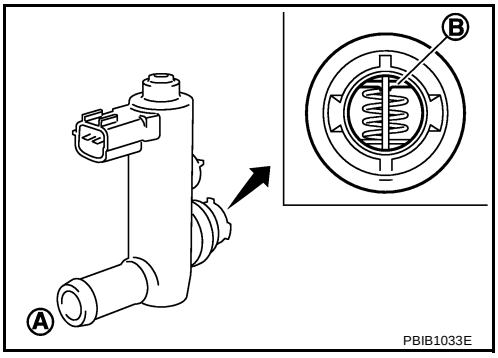

PBIB1033E

3. Check air passage continuity and operation delay time under the following conditions.
   Make sure new O-ring is installed properly.

Condition	Air passage continuity between A and B
12V direct current supply between terminals 1 and 2	No
OFF	Yes

Operation takes less than 1 second.

If NG, replace EVAP canister vent control valve.
If OK, go to next step.

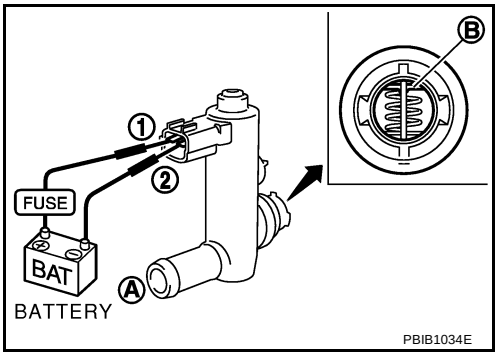

PBIB1034E

4. Clean the air passage (portion **A** to **B**) of EVAP canister vent control valve using an air blower.
5. Perform step 3 again.

DTC P0451 EVAP CONTROL SYSTEM PRESSURE SENSOR

PFP:22365

Component Description

ABS009VU

The EVAP control system pressure sensor detects pressure in the purge line. The sensor output voltage to the ECM increases as pressure increases.

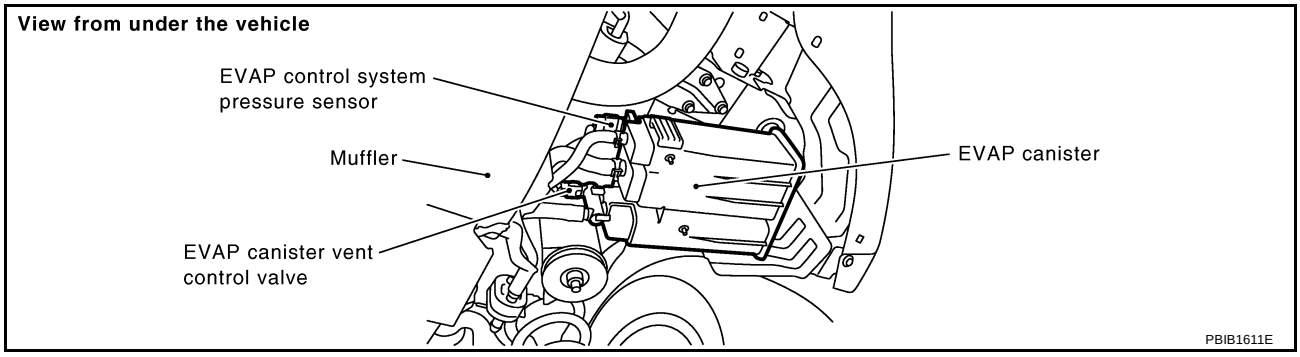

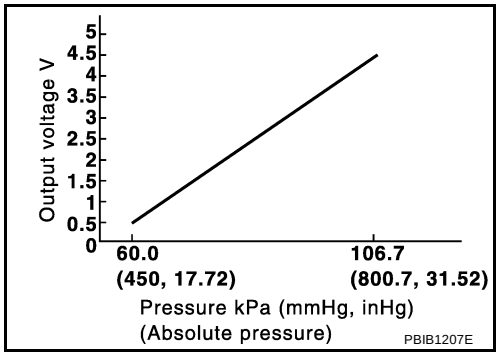

CONSULT-II Reference Value in Data Monitor Mode

ABS009VV

Specification data are reference values.

MONITOR ITEM	CONDITION	SPECIFICATION
EVAP SYS PRES	● Ignition switch: ON	Approx. 1.8 - 4.8V

On Board Diagnosis Logic

ABS009VW

NOTE:
If DTC P0451 is displayed with DTC P1229, first perform the trouble diagnosis for DTC P1229. Refer to **EC-483, "DTC P1229 SENSOR POWER SUPPLY"** **.**

DTC No.	Trouble diagnosis name	DTC detecting condition	Possible cause
P0451 0451	EVAP control system pressure sensor performance	ECM detects a sloshing signal from the EVAP control system pressure sensor	● Harness or connectors ● EVAP control system pressure sensor

DTC Confirmation Procedure

ABS009VX

NOTE:
If DTC Confirmation Procedure has been previously conducted, always turn ignition switch OFF and wait at least 10 seconds before conducting the next test.

WITH CONSULT-II

1. Turn ignition switch OFF and wait at least 10 seconds.
2. Turn ignition switch ON and select “DATA MONITOR” mode with CONSULT-II.
3. Start engine and wait at least 40 seconds.

   NOTE:
   Do not depress accelerator pedal even slightly.
   If 1st trip DTC is detected, go to EC-351, "Diagnostic Procedure"
   .

DATA MONITOR	
MONITOR	NO DTC
ENG SPEED	XXX rpm
COOLAN TEMP/S	XXX °C
FUEL T/TMP SE	XXX °C

SEF194Y

WITH GST

Follow the procedure “WITH CONSULT-II” above.

Diagnostic Procedure

ABS009VY

1. CHECK GROUND CONNECTIONS

1. Turn ignition switch OFF.
2. Loosen and retighten ground three screws on the body. Refer to EC-170, "Ground Inspection" .

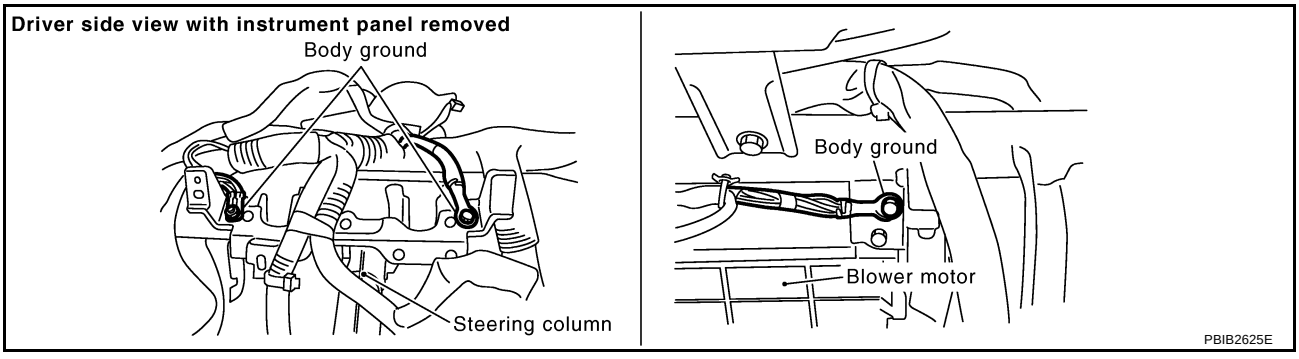

OK or NG

OK >> GO TO 2.
NG >> Repair or replace ground connections.

2. CHECK EVPA CONTROL SYSTEM PRESSURE SENSOR CONNECTOR FOR WATER

1. Disconnect EVAP control system pressure sensor harness connector.

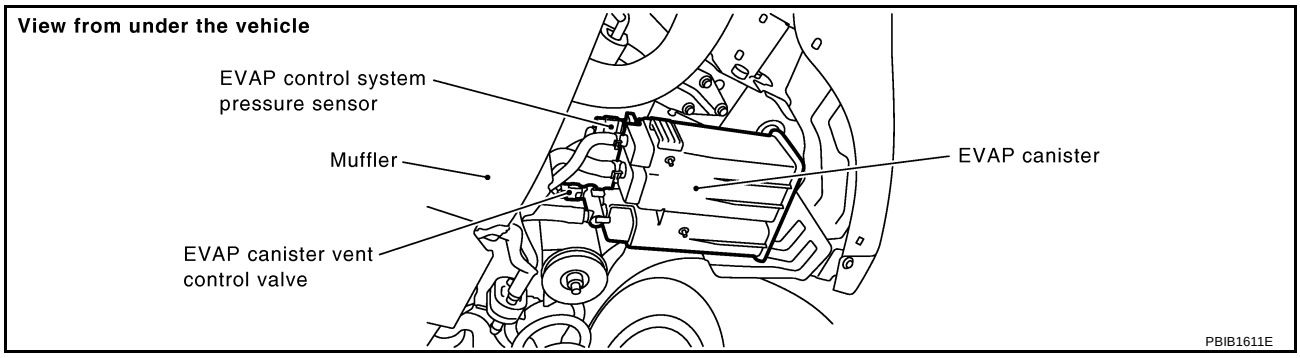

2. Check sensor harness connector for water.

Water should not exist.

OK or NG

OK >> GO TO 3.
NG >> Repair or replace harness connector.

3. CHECK EVAP CONTROL SYSTEM PRESSURE SENSOR

Refer to EC-352, "Component Inspection" .

OK or NG

OK >> GO TO 4.
NG >> Replace EVAP control system pressure sensor.

4. CHECK INTERMITTENT INCIDENT

Refer to EC-163, "TROUBLE DIAGNOSIS FOR INTERMITTENT INCIDENT" .
For Wiring Diagram, refer to EC-355 .

>> **INSPECTION END**

Component Inspection

ABS009VZ

EVAP CONTROL SYSTEM PRESSURE SENSOR

1. Remove EVAP control system pressure sensor with its harness connector connected from EVAP canister. **Always replace O-ring with a new one.**
2. Install a vacuum pump to EVAP control system pressure sensor.
3. Turn ignition switch ON and check output voltage between ECM terminal 32 and ground under the following conditions.

Applied vacuum kPa (mmHg, inHg)	Voltage V
Not applied	1.8 - 4.8
-26.7 (-200, -7.87)	2.1 to 2.5V lower than above value

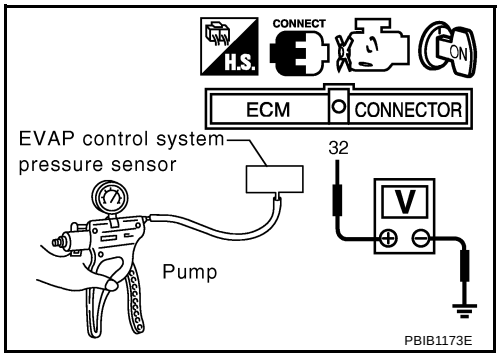

CAUTION:

- **Always calibrate the vacuum pump gauge when using it.**
- **Do not apply below -93.3 kPa (-700 mmHg, -27.56 inHg) or pressure over 101.3 kPa (760 mmHg, 29.92 inHg).**

4. If NG, replace EVAP control system pressure sensor.

DTC P0452 EVAP CONTROL SYSTEM PRESSURE SENSOR

PFP:25085

Component Description

ABS006R8

The EVAP control system pressure sensor detects pressure in the purge line. The sensor output voltage to the ECM increases as pressure increases.

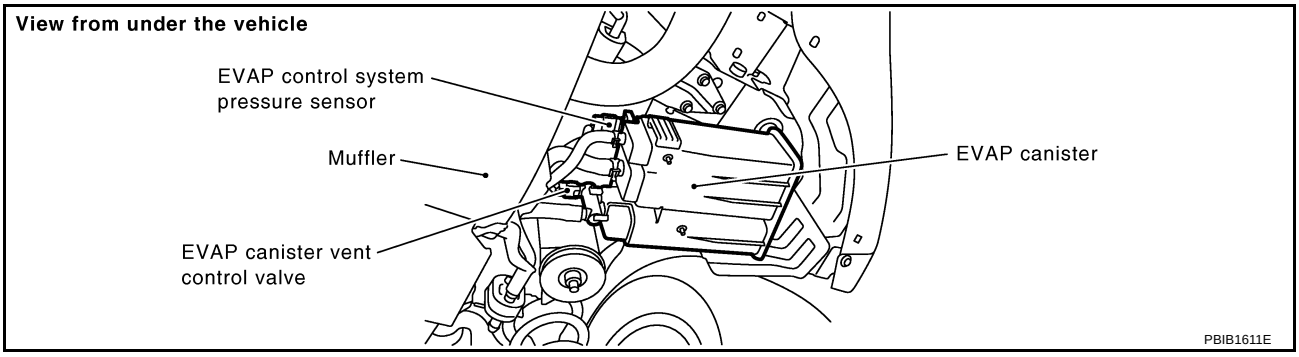

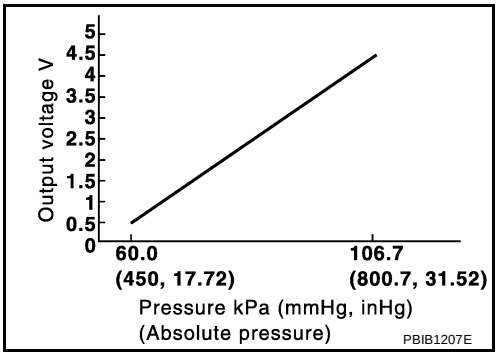

CONSULT-II Reference Value in Data Monitor Mode

ABS006R9

Specification data are reference values.

MONITOR ITEM	CONDITION	SPECIFICATION
EVAP SYS PRES	● Ignition switch: ON	Approx. 1.8 - 4.8V

On Board Diagnosis Logic

ABS006RA

NOTE:
If DTC P0452 is displayed with DTC P1229, first perform the trouble diagnosis for DTC P1229, Refer to **EC-483, "DTC P1229 SENSOR POWER SUPPLY"** **.**

DTC No.	Trouble diagnosis name	DTC detecting condition	Possible cause
P0452 0452	EVAP control system pressure sensor low input	An excessively low voltage from the sensor is sent to ECM.	● Harness or connectors (The sensor circuit is open or shorted.) ● EVAP control system pressure sensor

DTC Confirmation Procedure

ABS006RB

NOTE:
If DTC Confirmation Procedure has been previously conducted, always turn ignition switch OFF and wait at least 10 seconds before conducting the next test.
TESTING CONDITION:
Always perform test at a temperature of 5°C (41°F) or more.

WITH CONSULT-II

1. Start engine and warm it up to normal operating temperature.
2. Turn ignition switch OFF and wait at least 10 seconds.
3. Turn ignition switch ON.
4. Select “DATA MONITOR” mode with CONSULT-II.
5. Make sure that “FUEL T/TEMP SE” is more than 0°C (32°F).
6. Start engine and wait at least 20 seconds.
   If 1st trip DTC is detected, go to EC-356, "Diagnostic Procedure"
   .

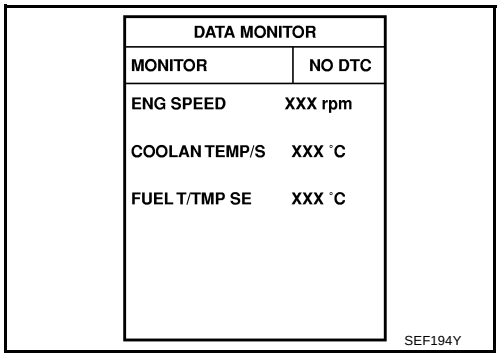

DATA MONITOR	
MONITOR	NO DTC
ENG SPEED	XXX rpm
COOLAN TEMP/S	XXX °C
FUEL T/TMP SE	XXX °C

SEF194Y

WITH GST

1. Start engine and warm it up to normal operating temperature.
2. Check that voltage between ECM terminal 107 (Fuel tank temperature sensor signal) and ground is less than 4.2V.
3. Turn ignition switch OFF and wait at least 10 seconds.
4. Start engine and wait at least 20 seconds.
5. Select Service $07 with GST.
   If 1st trip DTC is detected, go to EC-356, "Diagnostic Procedure"
   .

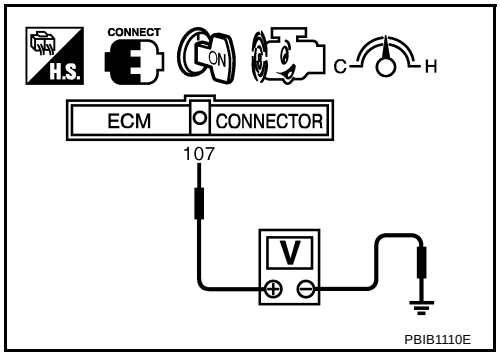

PBIB1110E

Wiring Diagram

ABS006RC

EC-PRE/SE-01

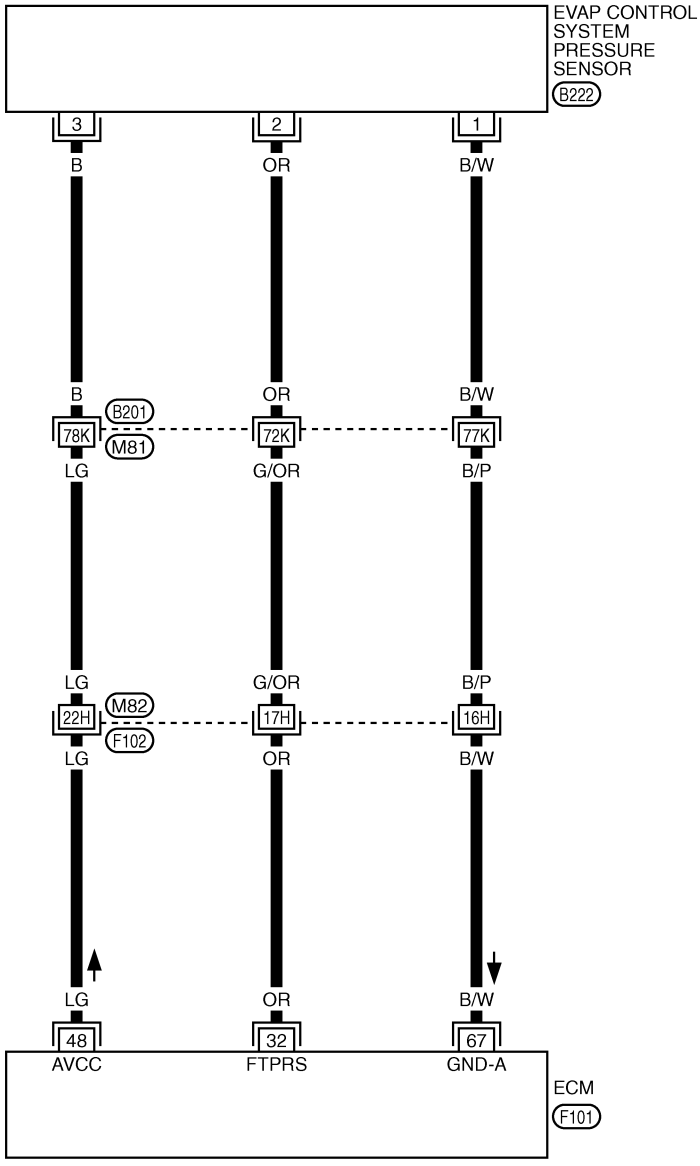

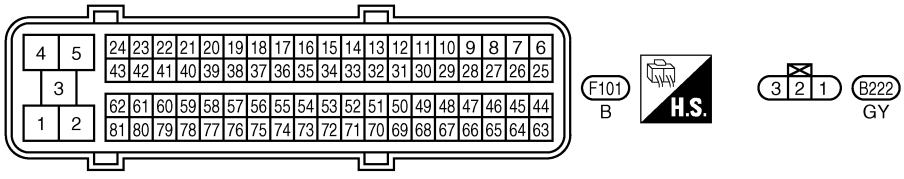

REFER TO THE FOLLOWING.
F102 , B201 -SUPER MULTIPLE JUNCTION (SMJ)

TBWH0111E

Specification data are reference values and are measured between each terminal and ground.

CAUTION:

Do not use ECM ground terminals when measuring input/output voltage. Doing so may result in damage to the ECM's transistor. Use a ground other than ECM terminals, such as the ground.

TERMINAL NO.	WIRE COLOR	ITEM	CONDITION	DATA (DC Voltage)
32	OR	EVAP control system pressure sensor	**[Ignition switch: ON]**	Approximately 1.8 - 4.8V
48	LG	Sensor power supply (EVAP control system pressure sensor)	**[Ignition switch: ON]**	Approximately 5V
67	B/W	Sensor ground	**[Engine is running]** ● **Warm-up condition** ● Idle speed	Approximately 0V

Diagnostic Procedure

ABS006RD

1. CHECK GROUND CONNECTIONS

1. Turn ignition switch OFF.
2. Loosen and retighten ground three screws on the body. Refer to EC-170, "Ground Inspection" .

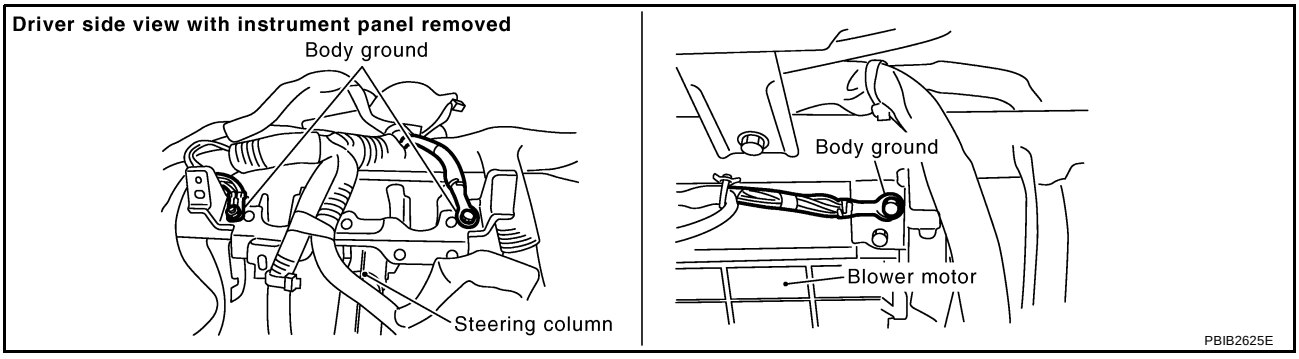

OK or NG

OK >> GO TO 2.
NG >> Repair or replace ground connections.

2. CHECK CONNECTOR

1. Disconnect EVAP control system pressure sensor harness connector.

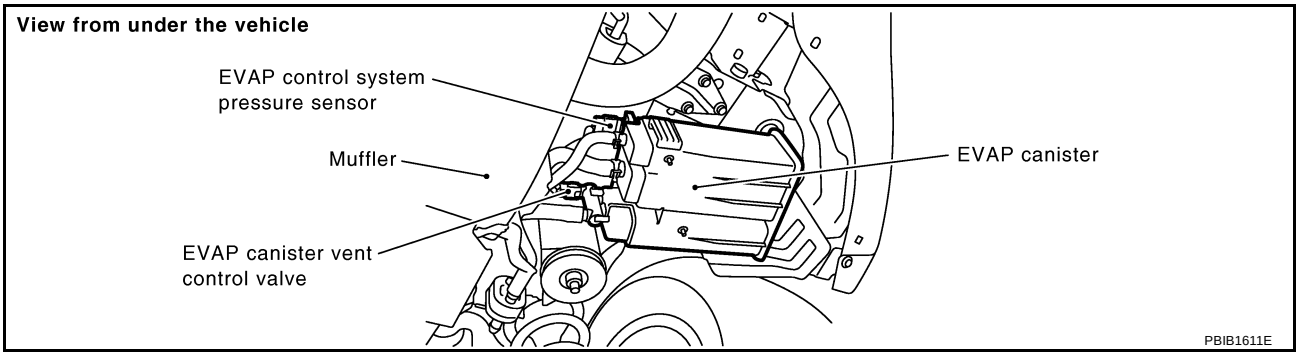

2. Check sensor harness connector for water.

Water should not exist.

OK or NG

OK >> GO TO 3.
NG >> Repair or replace harness connector.

3. CHECK EVAP CONTROL SYSTEM PRESSURE SENSOR POWER SUPPLY CIRCUIT

1. Turn ignition switch ON.
2. Check voltage between EVAP control system pressure sensor terminal 3 and ground with CONSULT-II or tester.

   Voltage: Approximately 5V

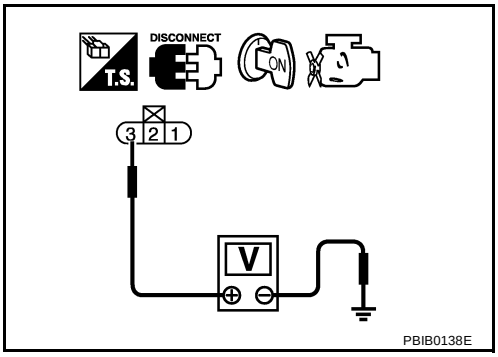

OK or NG

OK >> GO TO 5.
NG >> GO TO 4.

4. DETECT MALFUNCTIONING PART

Check the following.

- Harness connectors B201, M81
- Harness connectors M82, F102
- Harness for open or short between EVAP control system pressure sensor and ECM

>> Repair open circuit or short to ground or short to power in harness or connectors.

5. CHECK EVAP CONTROL SYSTEM PRESSURE SENSOR GROUND CIRCUIT FOR OPEN AND SHORT

1. Turn ignition switch OFF.
2. Disconnect ECM harness connector.
3. Check harness continuity between EVAP control system pressure sensor terminal 1 and ECM terminal 67.
   Refer to Wiring Diagram.

   Continuity should exist.

4. Also check harness for short to ground and short to power.

OK or NG

OK >> GO TO 7.
NG >> GO TO 6.

6. DETECT MALFUNCTIONING PART

Check the following.

- Harness connectors B201, M81
- Harness connectors M82, F102
- Harness for open or short between EVAP control system pressure sensor and ECM

>> Repair open circuit or short to ground or short to power in harness or connectors.

7. CHECK EVAP CONTROL SYSTEM PRESSURE SENSOR INPUT SIGNAL CIRCUIT FOR OPEN AND SHORT

1. Check harness continuity between ECM terminal 32 and EVAP control system pressure sensor terminal 2.
   Refer to Wiring Diagram.

   Continuity should exist.

2. Also check harness for short to ground and short to power.

OK or NG

OK >> GO TO 9.
NG >> GO TO 8.

8. DETECT MALFUNCTIONING PART

Check the following.

- Harness connectors B201, M81
- Harness connectors M82, F102
- Harness for open or short between EVAP control system pressure sensor and ECM

>> Repair open circuit or short to ground or short to power in harness or connectors.

9. CHECK EVAP CONTROL SYSTEM PRESSURE SENSOR

Refer to EC-358, "Component Inspection" .

OK or NG

OK >> GO TO 10.
NG >> Replace EVAP control system pressure sensor.

10. CHECK INTERMITTENT INCIDENT

Refer to EC-163, "TROUBLE DIAGNOSIS FOR INTERMITTENT INCIDENT" .

>> **INSPECTION END**

Component Inspection

ABS006RE

EVAP CONTROL SYSTEM PRESSURE SENSOR

1. Remove EVAP control system pressure sensor with its harness connector connected from EVAP canister.
   Always replace O-ring with a new one.
2. Install a vacuum pump to EVAP control system pressure sensor.
3. Turn ignition switch ON and check output voltage between ECM terminal 32 and ground under the following conditions.

Applied vacuum kPa (mmHg, inHg)	Voltage V
Not applied	1.8 - 4.8
-26.7 (-200, -7.87)	2.1 to 2.5V lower than above value

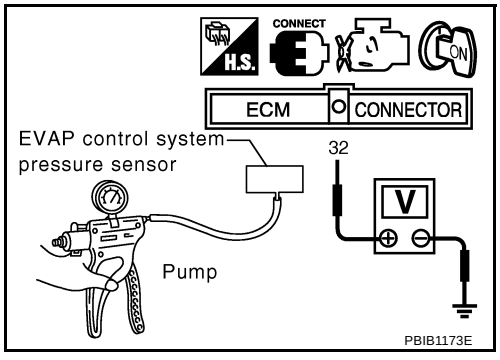

CAUTION:

- **Always calibrate the vacuum pump gauge when using it.**
- **Do not apply below -93.3 kPa (-700 mmHg, -27.56 inHg) or pressure over 101.3 kPa (760 mmHg, 29.92 inHg).**

4. If NG, replace EVAP control system pressure sensor.

DTC P0453 EVAP CONTROL SYSTEM PRESSURE SENSOR

PFP:25085

Component Description

ABS006RF

The EVAP control system pressure sensor detects pressure in the purge line. The sensor output voltage to the ECM increases as pressure increases.

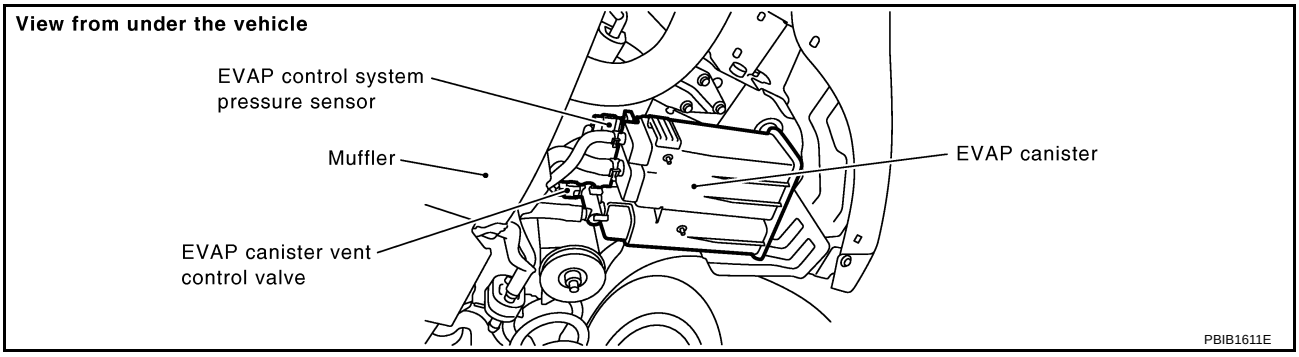

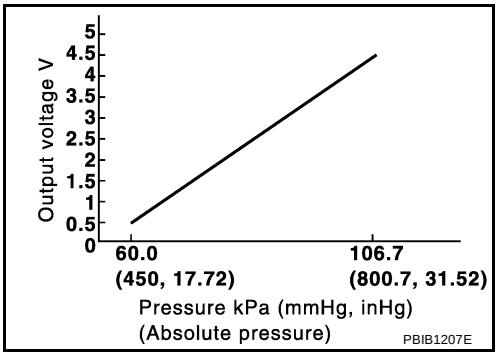

CONSULT-II Reference Value in Data Monitor Mode

ABS006RG

Specification data are reference values.

MONITOR ITEM	CONDITION	SPECIFICATION
EVAP SYS PRES	● Ignition switch: ON	Approx. 1.8 - 4.8V

On Board Diagnosis Logic

ABS006RH

NOTE:
If DTC P0453 is displayed with DTC P1229, first perform the trouble diagnosis for DTC P1229. Refer to **EC-483, "DTC P1229 SENSOR POWER SUPPLY"** **.**

DTC No.	Trouble diagnosis name	DTC detecting condition	Possible cause
P0453 0453	EVAP control system pressure sensor high input	An excessively high voltage from the sensor is sent to ECM.	● Harness or connectors (The sensor circuit is open or shorted.) ● EVAP control system pressure sensor ● EVAP canister vent control valve ● EVAP canister ● Rubber hose from EVAP canister vent control valve to vehicle frame

DTC Confirmation Procedure

ABS006RI

NOTE:
If DTC Confirmation Procedure has been previously conducted, always turn ignition switch OFF and wait at least 10 seconds before conducting the next test.
TESTING CONDITION:
Always perform test at a temperature of 5°C (41°F) or more.

WITH CONSULT-II

1. Start engine and warm it up to normal operating temperature.
2. Turn ignition switch OFF and wait at least 10 seconds.
3. Turn ignition switch ON.
4. Select “DATA MONITOR” mode with CONSULT-II.
5. Make sure that “FUEL T/TEMP SE” is more than 0°C (32°F).
6. Start engine and wait at least 20 seconds.
7. If 1st trip DTC is detected, go to EC-362, "Diagnostic Procedure"
.

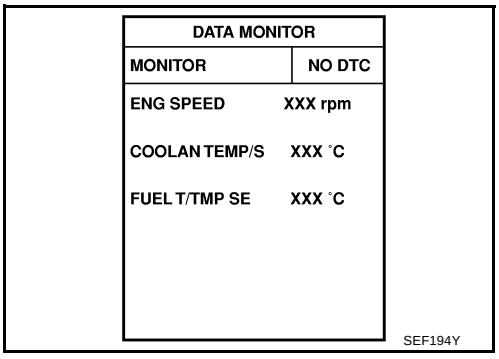

WITH GST

1. Start engine and warm it up to normal operating temperature.
2. Check that voltage between ECM terminal 107 (Fuel tank temperature sensor signal) and ground is less than 4.2V.
3. Turn ignition switch OFF and wait at least 10 seconds.
4. Start engine and wait at least 20 seconds.
5. Select Service $07 with GST.
   If 1st trip DTC is detected, go to EC-362, "Diagnostic Procedure"
.

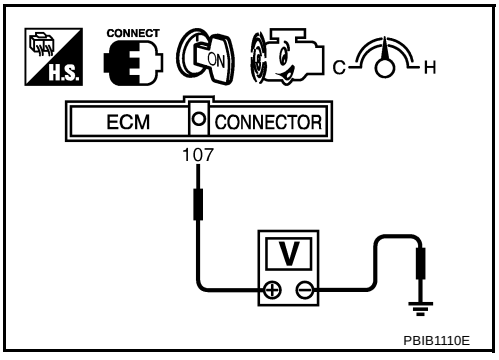

Wiring Diagram

ABS006RJ

EC-PRE/SE-01

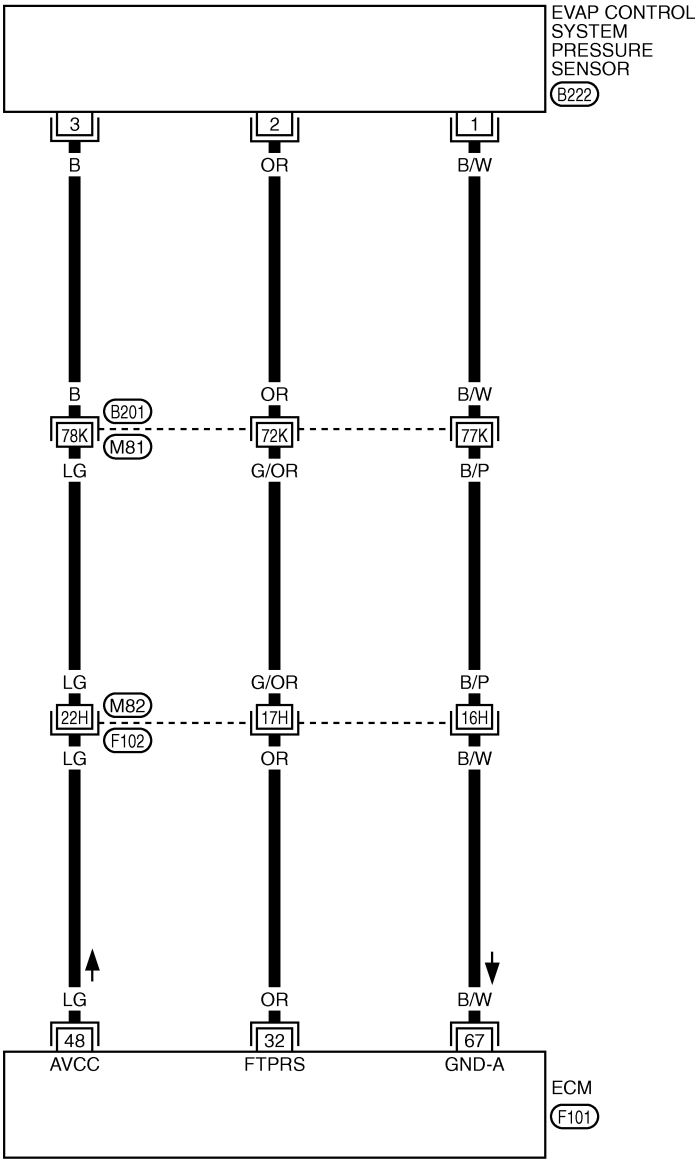

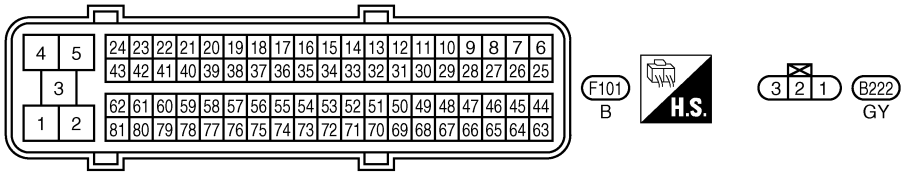

REFER TO THE FOLLOWING.
F102 , B201 -SUPER MULTIPLE JUNCTION (SMJ)

TBWH0111E

Specification data are reference values and are measured between each terminal and ground.

CAUTION:

Do not use ECM ground terminals when measuring input/output voltage. Doing so may result in damage to the ECM's transistor. Use a ground other than ECM terminals, such as the ground.

TERMINAL NO.	WIRE COLOR	ITEM	CONDITION	DATA (DC Voltage)
32	OR	EVAP control system pressure sensor	**[Ignition switch: ON]**	Approximately 1.8 - 4.8V
48	LG	Sensor power supply (EVAP control system pressure sensor)	**[Ignition switch: ON]**	Approximately 5V
67	B/W	Sensor ground	**[Engine is running]** ● **Warm-up condition** ● Idle speed	Approximately 0V

Diagnostic Procedure

ABS006RK

1. CHECK GROUND CONNECTIONS

1. Turn ignition switch OFF.
2. Loosen and retighten ground three screws on the body. Refer to EC-170, "Ground Inspection" .

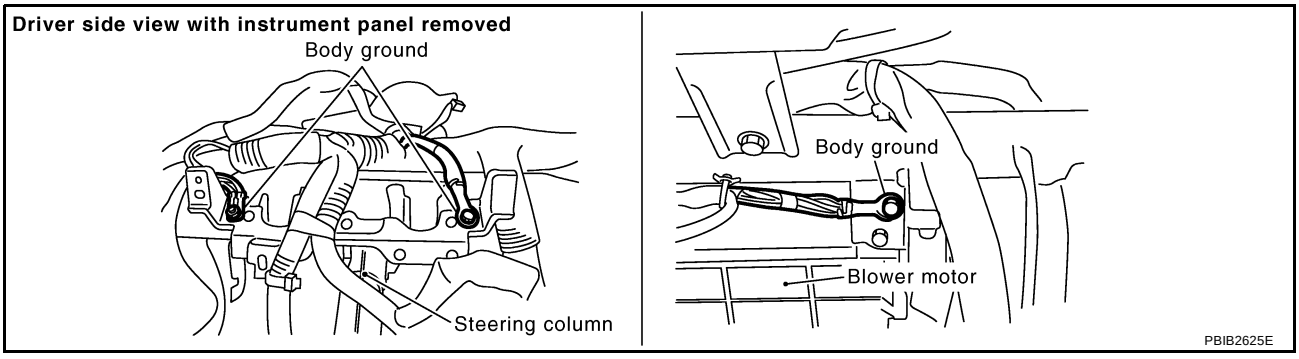

OK or NG

OK >> GO TO 2.
NG >> Repair or replace ground connections.

2. CHECK CONNECTOR

1. Disconnect EVAP control system pressure sensor harness connector.

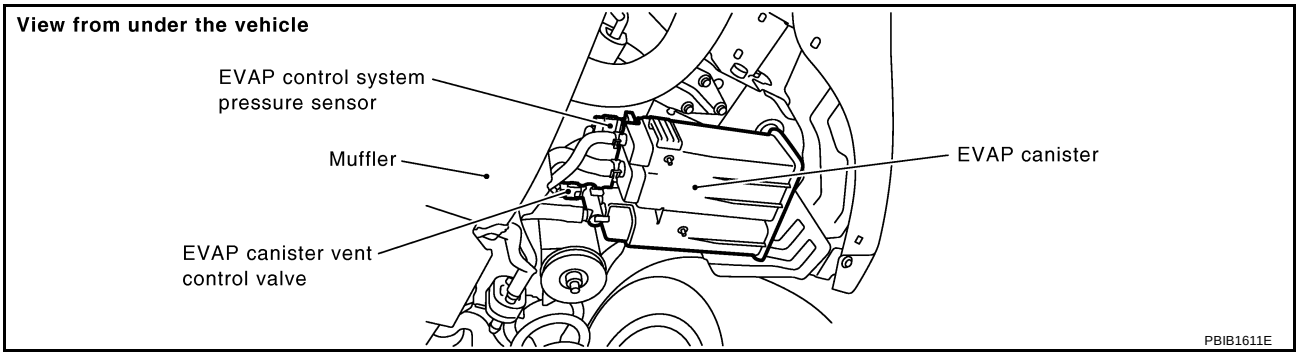

2. Check sensor harness connector for water.

Water should not exist.

OK or NG

OK >> GO TO 3.
NG >> Repair or replace harness connector.

3. CHECK EVAP CONTROL SYSTEM PRESSURE SENSOR POWER SUPPLY CIRCUIT

1. Turn ignition switch ON.
2. Check voltage between EVAP control system pressure sensor terminal 3 and ground with CONSULT-II or tester.

   Voltage: Approximately 5V

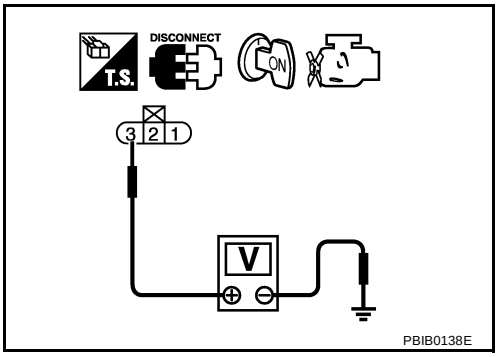

OK or NG

OK >> GO TO 5.
NG >> GO TO 4.

4. DETECT MALFUNCTIONING PART

Check the following.

- Harness connectors M81, B201
- Harness connectors M82, F102
- Harness for open or short between EVAP control system pressure sensor and ECM

>> Repair open circuit or short to ground or short to power in harness or connectors.

5. CHECK EVAP CONTROL SYSTEM PRESSURE SENSOR GROUND CIRCUIT FOR OPEN AND SHORT

1. Turn ignition switch OFF.
2. Disconnect ECM harness connector.
3. Check harness continuity between EVAP control system pressure sensor terminal 1 and ECM terminal 67.
   Refer to Wiring Diagram.

   Continuity should exist.

4. Also check harness for short to ground and short to power.

OK or NG

OK >> GO TO 7.
NG >> GO TO 6.

6. DETECT MALFUNCTIONING PART

Check the following.

- Harness connectors M81, B201
- Harness connectors M82, F102
- Harness for open or short between EVAP control system pressure sensor and ECM

>> Repair open circuit or short to ground or short to power in harness or connectors.

7. CHECK EVAP CONTROL SYSTEM PRESSURE SENSOR INPUT SIGNAL CIRCUIT FOR OPEN AND SHORT

1. Check harness continuity between ECM terminal 32 and EVAP control system pressure sensor terminal 2.
   Refer to Wiring Diagram.

   Continuity should exist.

2. Also check harness for short to ground and short to power.

OK or NG

OK >> GO TO 9.
NG >> GO TO 8.

8. DETECT MALFUNCTIONING PART

Check the following.

- Harness connectors M81, B201
- Harness connectors M82, F102
- Harness for open or short between EVAP control system pressure sensor and ECM

>> Repair open circuit or short to ground or short to power in harness or connectors.

9. CHECK RUBBER TUBE

1. Disconnect rubber tube connected to EVAP canister vent control valve.
2. Check the rubber tube for clogging, vent and kinked.

OK or NG

OK >> GO TO 10.
NG >> Clean the rubber tube using an air blower, repair or replace rubber tube.

10. CHECK EVAP CANISTER VENT CONTROL VALVE

Refer to EC-348, "Component Inspection" .

OK or NG

OK >> GO TO 11.
NG >> Replace EVAP canister vent control valve.

11. CHECK EVAP CONTROL SYSTEM PRESSURE SENSOR

Refer to EC-366, "Component Inspection" .

OK or NG

OK >> GO TO 12.
NG >> Replace EVAP control system pressure sensor.

12. CHECK IF EVAP CANISTER SATURATED WITH WATER

1. Remove EVAP canister with EVAP canister vent control valve and EVAP control system pressure sensor attached.
2. Check if water will drain from the EVAP canister.

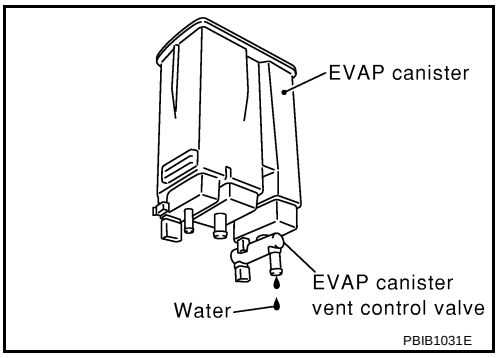

Yes or No

Yes >> GO TO 13.
No >> GO TO 15.

13. CHECK EVAP CANISTER

Weigh the EVAP canister with the EVAP canister vent control valve and EVAP control system pressure sensor attached.
The weight should be less than 2.1 kg (4.6 lb).

OK or NG

OK >> GO TO 15.
NG >> GO TO 14.

14. DETECT MALFUNCTIONING PART

Check the following.

- EVAP canister for damage
- EVAP hose between EVAP canister and vehicle frame for clogging or poor connection

>> Repair hose or replace EVAP canister.

15. CHECK INTERMITTENT INCIDENT

Refer to EC-163, "TROUBLE DIAGNOSIS FOR INTERMITTENT INCIDENT" .

>> **INSPECTION END**

Component Inspection

ABS006RL

EVAP CONTROL SYSTEM PRESSURE SENSOR

1. Remove EVAP control system pressure sensor with its harness connector connected from EVAP canister. **Always replace O-ring with a new one.**
2. Install a vacuum pump to EVAP control system pressure sensor.
3. Turn ignition switch ON and check output voltage between ECM terminal 32 and ground under the following conditions.

Applied vacuum kPa (mmHg, inHg)	Voltage V
Not applied	1.8 - 4.8
-26.7 (-200, -7.87)	2.1 to 2.5V lower than above value

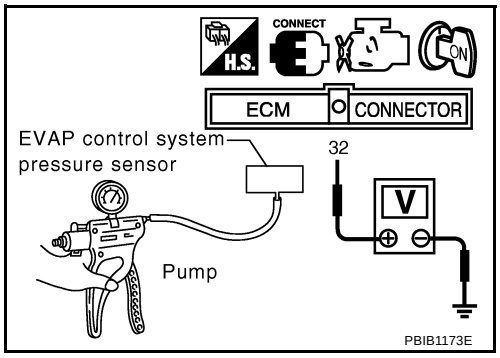

CAUTION:
- **Always calibrate the vacuum pump gauge when using it.**
- **Do not apply below -93.3 kPa (-700 mmHg, -27.56 inHg) or pressure over 101.3 kPa (760 mmHg, 29.92 inHg).**

4. If NG, replace EVAP control system pressure sensor.

DTC P0455 EVAP CONTROL SYSTEM

PFP:14950

On Board Diagnosis Logic

ABS006RM

This diagnosis detects a very large leak (fuel filler cap fell off etc.) in EVAP system between the fuel tank and EVAP canister purge volume control solenoid valve.

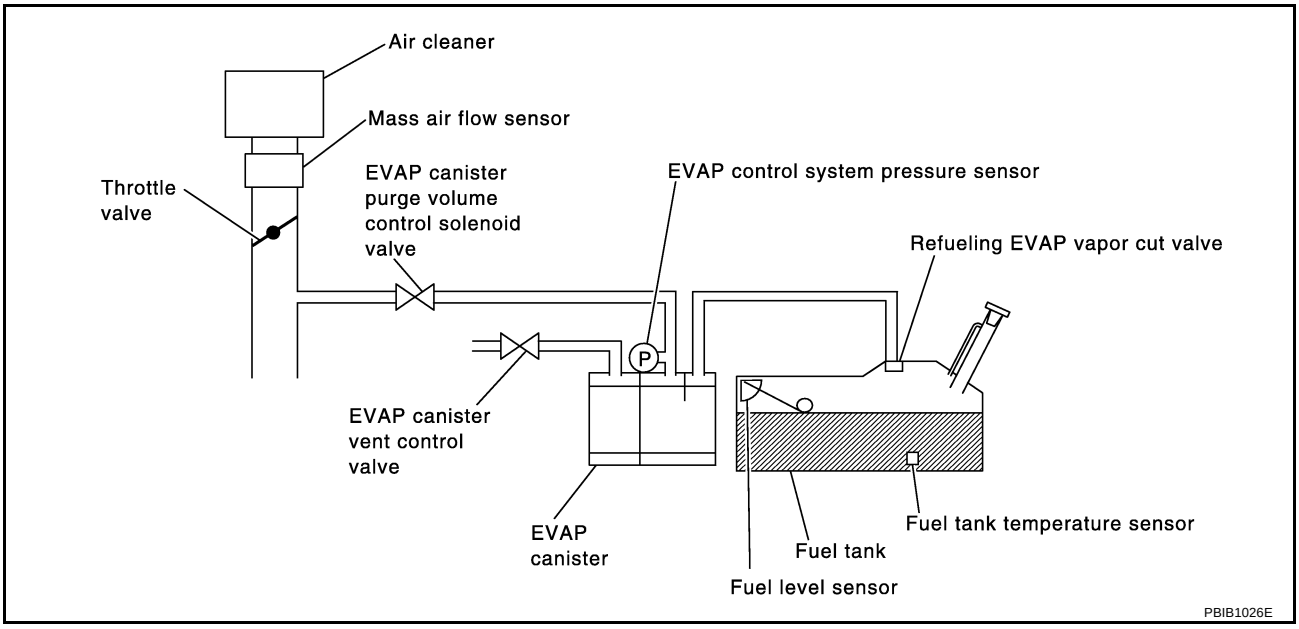

DTC No.	Trouble diagnosis name	DTC detecting condition	Possible cause
P0455 0455	EVAP control system gross leak detected	EVAP control system has a very large leak such as fuel filler cap fell off, EVAP control system does not operate properly.	● Fuel filler cap remains open or fails to close. ● Incorrect fuel tank vacuum relief valve ● Incorrect fuel filler cap used ● Foreign matter caught in fuel filler cap. ● Leak is in line between intake manifold and EVAP canister purge volume control solenoid valve. ● Foreign matter caught in EVAP canister vent control valve. ● EVAP canister or fuel tank leaks ● EVAP purge line (pipe and rubber tube) leaks ● EVAP purge line rubber tube bent. ● Loose or disconnected rubber tube ● EVAP canister vent control valve and the circuit ● EVAP canister purge volume control solenoid valve and the circuit ● Fuel tank temperature sensor ● O-ring of EVAP canister vent control valve is missing or damaged. ● EVAP control system pressure sensor ● Refueling EVAP vapor cut valve ● ORVR system leaks

CAUTION:

- **Use only a genuine NISSAN fuel filler cap as a replacement. If an incorrect fuel filler cap is used, the MIL may come on.**
- **If the fuel filler cap is not tightened properly, the MIL may come on.**

- **Use only a genuine NISSAN rubber tube as a replacement.**

DTC Confirmation Procedure

ABS006RN

CAUTION:
Never remove fuel filler cap during the DTC Confirmation Procedure.

NOTE:
- **Make sure that EVAP hoses are connected to EVAP canister purge volume control solenoid valve properly.**
- If DTC Confirmation Procedure has been previously conducted, always turn ignition switch OFF and wait at least 10 seconds before conducting the next test.

TESTING CONDITION:
- **Perform "DTC WORK SUPPORT" when the fuel level is between 1/4 and 3/4 full, and vehicle is placed on flat level surface.**
- **Open engine hood before conducting the following procedures.**

WITH CONSULT-II

1. Tighten fuel filler cap securely until ratcheting sound is heard.
2. Turn ignition switch ON.
3. Turn ignition switch OFF and wait at least 10 seconds.
4. Turn ignition switch ON and select "DATA MONITOR" mode with CONSULT-II.
5. Make sure that the following conditions are met.
   COOLAN TEMP/S: 0 - 70°C (32 - 158°F)
   INT/A TEMP SE: 0 - 60°C (32 - 140°F)
6. Select "EVAP SML LEAK P0442/P1442" of "EVAPORATIVE SYSTEM" in "DTC WORK SUPPORT" mode with CONSULT-II.
   Follow the instruction displayed.

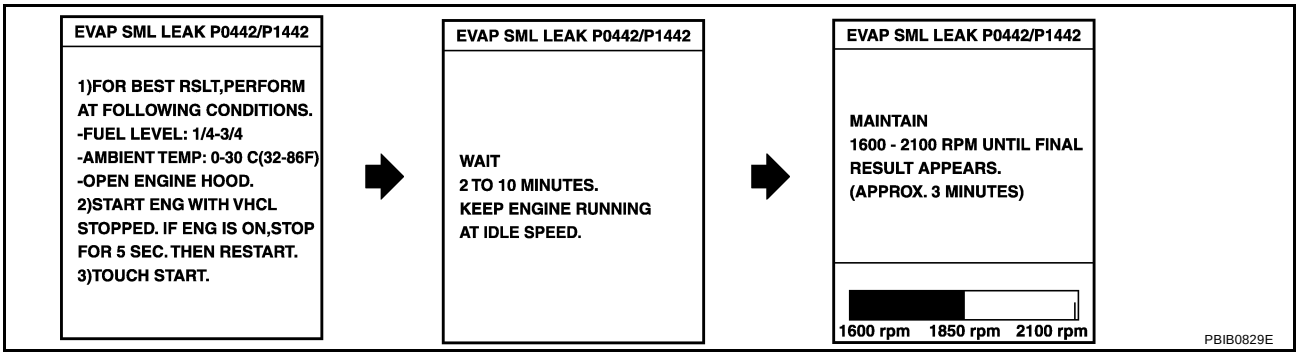

NOTE:
If the engine speed cannot be maintained within the range displayed on the CONSULT-II screen, go to EC-78, "Basic Inspection" .

7. Make sure that "OK" is displayed.
   If "NG" is displayed, select "SELF-DIAG RESULTS" mode and make sure that "EVAP GROSS LEAK [P0455]" is displayed. If it is displayed, refer to EC-369, "Diagnostic Procedure" .
   If P0442 is displayed, perform Diagnostic Procedure for DTC P0442 EC-329, "Diagnostic Procedure" .

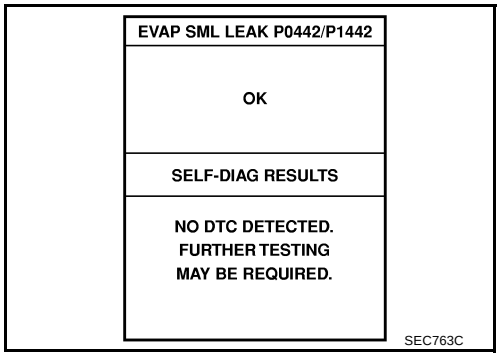

WITH GST

NOTE:
Be sure to read the explanation of EC-65, "Driving Pattern" before driving vehicle.

1. Start engine.
2. Drive vehicle according to EC-65, "Driving Pattern" .
3. Stop vehicle.
4. Turn ignition switch OFF, wait at least 10 seconds and then turn ON.
5. Select Service $07 with GST.
   - If P0455 is displayed on the screen, go to EC-369, "Diagnostic Procedure" .
   - If P0442 is displayed on the screen, go to Diagnostic Procedure, for DTC P0442, EC-329 .
   - If P0441 is displayed on the screen, go to Diagnostic Procedure for DTC P0441, EC-324 .

Diagnostic Procedure

ABS006RO

1. CHECK FUEL FILLER CAP DESIGN

1. Turn ignition switch OFF.
2. Check for genuine NISSAN fuel filler cap design.

OK or NG

OK >> GO TO 2.
NG >> Replace with genuine NISSAN fuel filler cap.

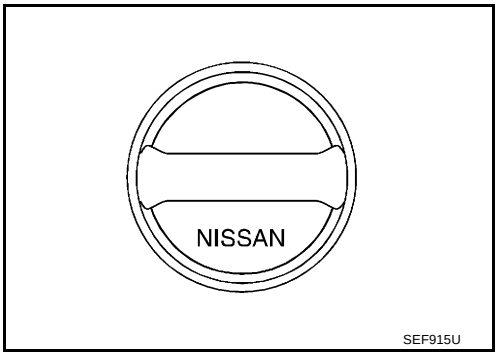

2. CHECK FUEL FILLER CAP INSTALLATION

Check that the cap is tightened properly by rotating the cap clockwise.

OK or NG

OK >> GO TO 3.
NG >> 1. Open fuel filler cap, then clean cap and fuel filler neck threads using air blower.
2. Retighten until ratcheting sound is heard.

3. CHECK FUEL FILLER CAP FUNCTION

Check for air releasing sound while opening the fuel filler cap.

OK or NG

OK >> GO TO 5.
NG >> GO TO 4.

4. CHECK FUEL TANK VACUUM RELIEF VALVE

Refer to EC-42, "FUEL TANK VACUUM RELIEF VALVE (BUILT INTO FUEL FULLER CAP)" .

OK or NG

OK >> GO TO 5.
NG >> Replace fuel filler cap with a genuine one.

5. CHECK EVAP PURGE LINE

Check EVAP purge line (pipe, rubber tube, fuel tank and EVAP canister) for cracks, improper connection or disconnection.
Refer to EC-40, "EVAPORATIVE EMISSION LINE DRAWING" .

OK or NG

OK >> GO TO 6.
NG >> Repair or reconnect the hose.

6. CLEAN EVAP PURGE LINE

Clean EVAP purge line (pipe and rubber tube) using air blower.

>> GO TO 7.

7. CHECK EVAP CANISTER VENT CONTROL VALVE

Check the following.

- EVAP canister vent control valve is installed properly.
  Refer to EC-43, "Removal and Installation" .
- EVAP canister vent control valve.
  Refer to EC-348, "Component Inspection" .

OK or NG

OK >> GO TO 8.
NG >> Repair or replace EVAP canister vent control valve and O-ring.

8. INSTALL THE PRESSURE PUMP

To locate the EVAP leak, install EVAP service port adapter and pressure pump to EVAP service port securely.

NOTE:
Improper installation of the EVAP service port adapter to the EVAP service port may cause leaking.

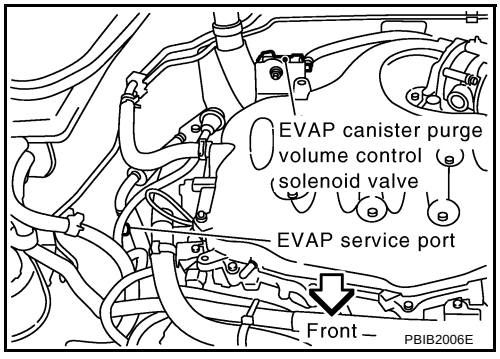

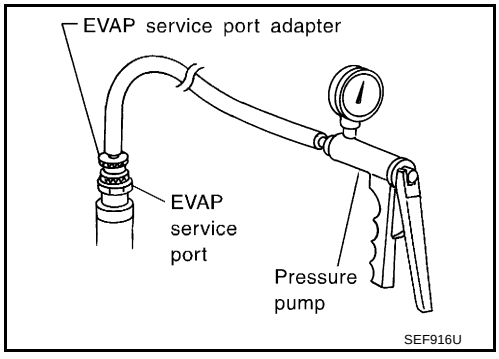

Models with CONSULT-II>>GO TO 9.
Models without CONSULT-II>>GO TO 10.

9. CHECK FOR EVAP LEAK

With CONSULT-II

1. Turn ignition switch ON.
2. Select “EVAP SYSTEM CLOSE” of “WORK SUPPORT” mode with CONSULT-II.
3. Touch “START” and apply pressure into the EVAP line until the pressure indicator reaches the middle of the bar graph.

   CAUTION:
   - **Never use compressed air or a high pressure pump.**
   - **Do not exceed 4.12 kPa (0.042 kg/cm^2 , 0.6 psi) of pressure in the system.**

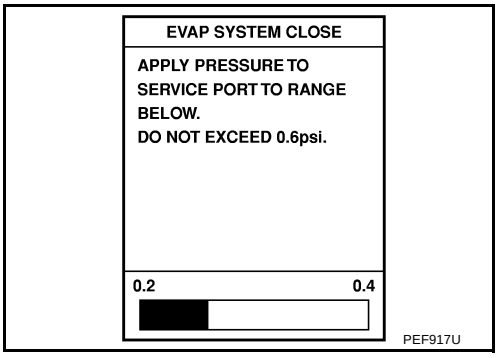

4. Using EVAP leak detector, locate the EVAP leak. For the leak detector, refer to the instruction manual for more details.
   Refer to EC-40, "EVAPORATIVE EMISSION LINE DRAWING" .

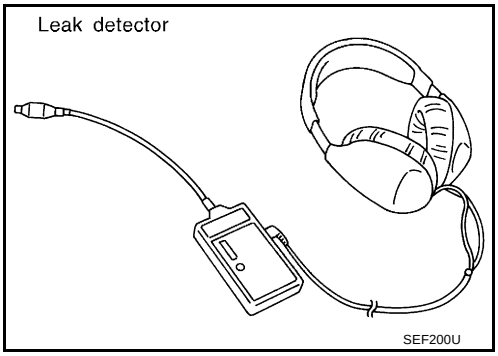

OK or NG

OK >> GO TO 11.
NG >> Repair or replace.

10. CHECK FOR EVAP LEAK

Without CONSULT-II

1. Turn ignition switch OFF.
2. Apply 12 volts DC to EVAP canister vent control valve. The valve will close. (Continue to apply 12 volts until the end of test.)

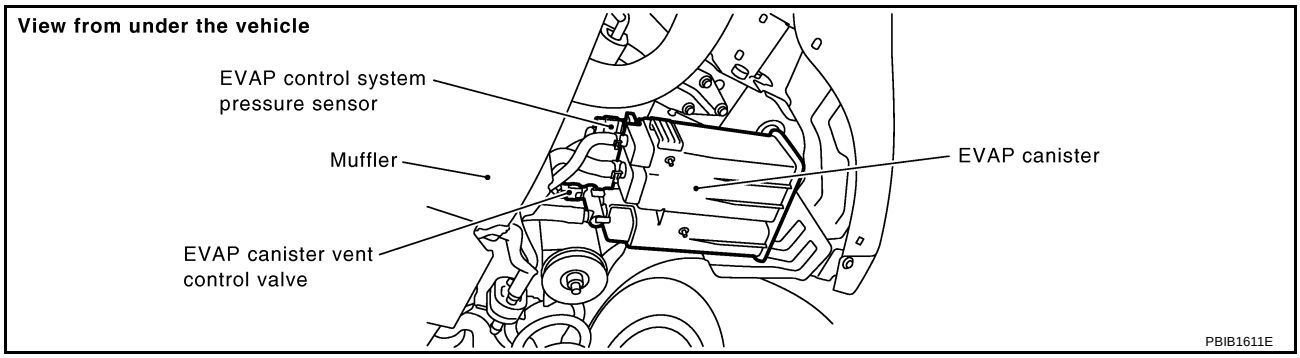

3. Pressurize the EVAP line using pressure pump with 1.3 to 2.7 kPa (10 to 20 mmHg, 0.39 to 0.79 inHg), then remove pump and EVAP service port adapter.

   CAUTION:
   - **Never use compressed air or a high pressure pump.**
   - **Do not exceed 4.12 kPa (0.042 kg/cm^2 , 0.6 psi) of pressure in the system.**
4. Using EVAP leak detector, locate the EVAP leak. For the leak detector, refer to the instruction manual for more details. Refer to EC-40, "EVAPORATIVE EMISSION LINE DRAWING" .

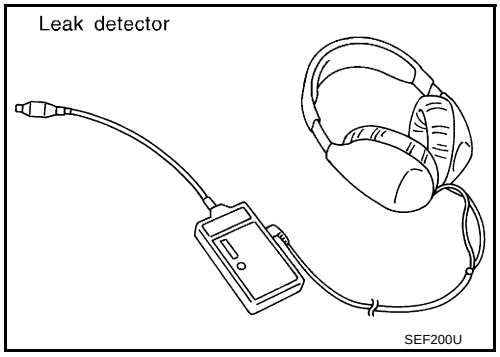

OK or NG

OK >> GO TO 12.
NG >> Repair or replace.

11. CHECK EVAP CANISTER PURGE VOLUME CONTROL SOLENOID VALVE OPERATION

With CONSULT-II

1. Disconnect vacuum hose to EVAP canister purge volume control solenoid valve at EVAP service port.
2. Start engine.
3. Perform “PURG VOL CONT/V” in “ACTIVE TEST” mode.
4. Touch “Qu” on CONSULT-II screen to increase “PURG VOL CONT/V” opening to 100%.
5. Check vacuum hose for vacuum when revving engine up to 2,000 rpm.

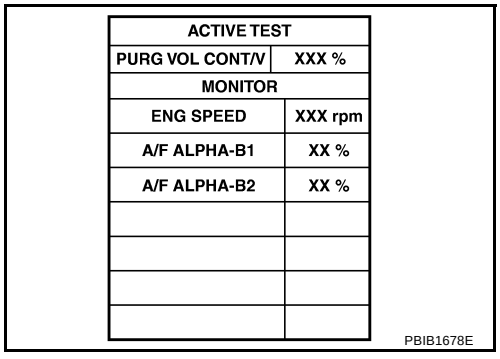

ACTIVE TEST	
PURG VOL CONT/V	XXX %
MONITOR	
ENG SPEED	XXX rpm
A/F ALPHA-B1	XX %
A/F ALPHA-B2	XX %

PBIB1678E

OK or NG

OK >> GO TO 14.
NG >> GO TO 13.

12. CHECK EVAP CANISTER PURGE VOLUME CONTROL SOLENOID VALVE OPERATION

Without CONSULT-II

1. Start engine and warm it up to normal operating temperature.
2. Stop engine.
3. Disconnect vacuum hose to EVAP canister purge volume control solenoid valve at EVAP service port.
4. Start engine and let it idle for at least 80 seconds.
5. Check vacuum hose for vacuum when revving engine up to 2,000 rpm.

Vacuum should exist.

OK or NG

OK >> GO TO 15.
NG >> GO TO 13.

13. CHECK VACUUM HOSE

Check vacuum hoses for clogging or disconnection. Refer to EC-120, "Vacuum Hose Drawing" .

OK or NG

OK (With CONSULT-II)>>GO TO 14.
OK (Without CONSULT-II)>>GO TO 15.
NG >> Repair or reconnect the hose.

14. CHECK EVAP CANISTER PURGE VOLUME CONTROL SOLENOID VALVE

With CONSULT-II

1. Start engine.
2. Perform “PURG VOL CONT/V” in “ACTIVE TEST” mode with CONSULT-II. Check that engine speed varies according to the valve opening.

OK or NG

OK >> GO TO 16.
NG >> GO TO 15.

ACTIVE TEST	
PURG VOL CONT/V	XXX %
MONITOR	
ENG SPEED	XXX rpm
A/F ALPHA-B1	XX %
A/F ALPHA-B2	XX %

PBIB1678E

15. CHECK EVAP CANISTER PURGE VOLUME CONTROL SOLENOID VALVE

Refer to EC-341, "Component Inspection" .

OK or NG

OK >> GO TO 16.
NG >> Replace EVAP canister purge volume control solenoid valve.

16. CHECK FUEL TANK TEMPERATURE SENSOR

Refer to EC-271, "Component Inspection" .

OK or NG

OK >> GO TO 17.
NG >> Replace fuel level sensor unit.

17. CHECK EVAP CONTROL SYSTEM PRESSURE SENSOR

Refer to EC-358, "Component Inspection" .

OK or NG

OK >> GO TO 18.
NG >> Replace EVAP control system pressure sensor.

18. CHECK EVAP/ORVR LINE

Check EVAP/ORVR line between EVAP canister and fuel tank for clogging, kink, looseness and improper connection. For location, refer to EC-46, "ON BOARD REFUELING VAPOR RECOVERY (ORVR)" .

OK or NG

OK >> GO TO 19.
NG >> Repair or replace hoses and tubes.

19. CHECK RECIRCULATION LINE

Check recirculation line between filler neck tube and fuel tank for clogging, kink, cracks, looseness and improper connection.

OK or NG

OK >> GO TO 20.
NG >> Repair or replace hose, tube or filler neck tube.

20. CHECK REFUELING EVAP VAPOR CUT VALVE

Refer to EC-49, "Component Inspection" .

OK or NG

OK >> GO TO 21.
NG >> Replace refueling EVAP vapor cut valve with fuel tank.

21. CHECK INTERMITTENT INCIDENT

Refer to EC-163, "TROUBLE DIAGNOSIS FOR INTERMITTENT INCIDENT" .

>> **INSPECTION END**

DTC P0456 EVAP CONTROL SYSTEM

PFP:14950

On Board Diagnosis Logic

ABS006RP

This diagnosis detects very small leaks in the EVAP line between fuel tank and EVAP canister purge volume control solenoid valve, using the intake manifold vacuum in the same way as conventional EVAP small leak diagnosis.
If ECM judges a leak which corresponds to a very small leak, the very small leak P0456 will be detected.
If ECM judges a leak equivalent to a small leak, EVAP small leak P0442 will be detected.
If ECM judges there are no leaks, the diagnosis will be OK.

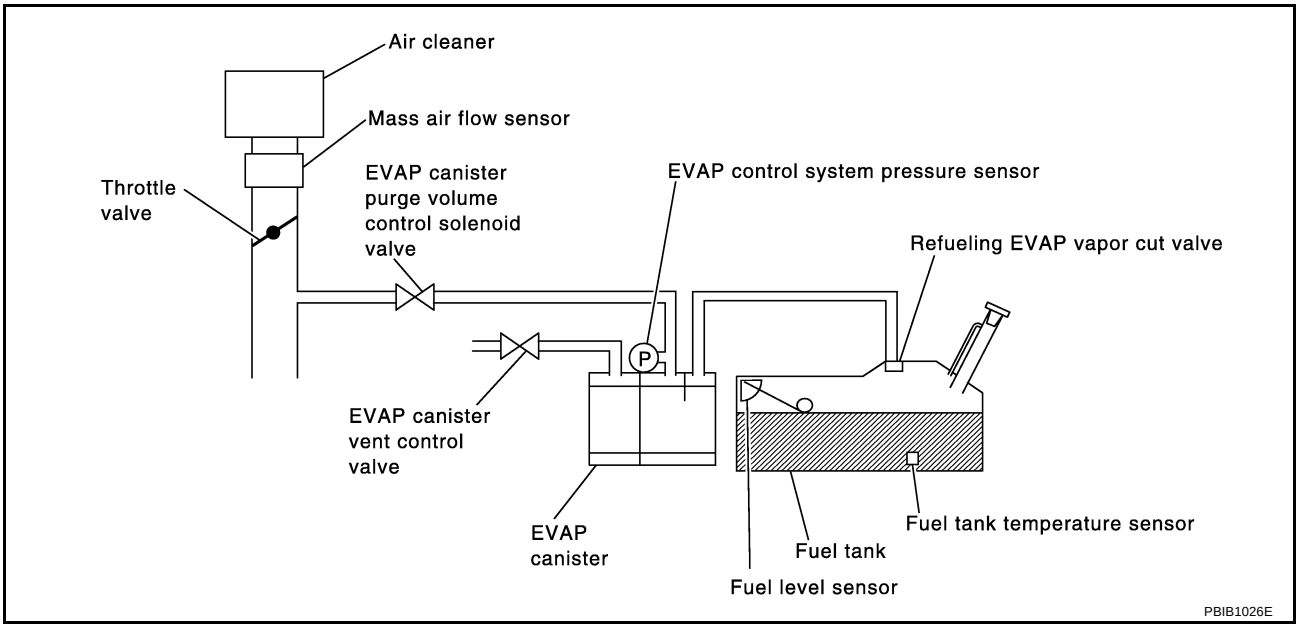

DTC No.	Trouble diagnosis name	DTC detecting condition	Possible cause
P0456 0456	Evaporative emission control system very small leak (negative pressure check)	● EVAP system has a very small leak. ● EVAP system does not operate properly.	● Incorrect fuel tank vacuum relief valve ● Incorrect fuel filler cap used ● Fuel filler cap remains open or fails to close. ● Foreign matter caught in fuel filler cap. ● Leak is in line between intake manifold and EVAP canister purge volume control solenoid valve. ● Foreign matter caught in EVAP canister vent control valve. ● EVAP canister or fuel tank leaks ● EVAP purge line (pipe and rubber tube) leaks ● EVAP purge line rubber tube bent ● Loose or disconnected rubber tube ● EVAP canister vent control valve and the circuit ● EVAP canister purge volume control solenoid valve and the circuit ● Fuel tank temperature sensor ● O-ring of EVAP canister vent control valve is missing or damaged ● EVAP canister is saturated with water ● EVAP control system pressure sensor ● Refueling EVAP vapor cut valve ● ORVR system leaks ● Fuel level sensor and the circuit ● Foreign matter caught in EVAP canister purge volume control solenoid valve

CAUTION:

- **Use only a genuine NISSAN fuel filler cap as a replacement. If an incorrect fuel filler cap is used, the MIL may come on.**
- **If the fuel filler cap is not tightened properly, the MIL may come on.**
- **Use only a genuine NISSAN rubber tube as a replacement.**

DTC Confirmation Procedure

ABS006RQ

NOTE:

- **If DTC P0456 is displayed with P0442, first perform trouble diagnosis for DTC P0456.**
- **After repair, make sure that the hoses and clips are installed properly.**
- If DTC Confirmation Procedure has been previously conducted, always turn ignition switch OFF and wait at least 10 seconds before conducting the next test.

TESTING CONDITION:

- **Open engine hood before conducting following procedure.**
- **If any of following conditions are met just before the DTC confirmation procedure, leave the vehicle for more than 1 hour.**
  - **Fuel filler cap is removed.**
  - **Fuel is refilled or drained.**
  - **EVAP component parts is/are removed.**
- **Before performing the following procedure, confirm that battery voltage is more than 11V at idle.**

WITH CONSULT-II

1. Turn ignition switch ON and select “DATA MONITOR” mode with CONSULT-II.
2. Make sure the following conditions are met.
   FUEL LEVEL SE: 0.25 - 1.4V
   COOLAN TEMP/S: 0 - 32°C (32 - 90°F)
   FUEL T/TMP SE: 0 - 35°C (32 - 95°F)
   INT A/TEMP SE: More than 0°C (32°F)
   If NG, turn ignition switch OFF and leave the vehicle in a cool place (soak the vehicle) or refilling/draining fuel until the output voltage condition of the “FUEL LEVEL SE” meets within the range above and leave the vehicle for more than 1 hour. Then start from step 1).
3. Turn ignition switch OFF and wait at least 10 seconds.
4. Turn ignition switch ON.
5. Select “EVAP V/S LEAK P0456/P1456” of “EVAPORATIVE SYSTEM” in “DTC WORK SUPPORT” mode with CONSULT-II.
   Follow the instruction displayed.

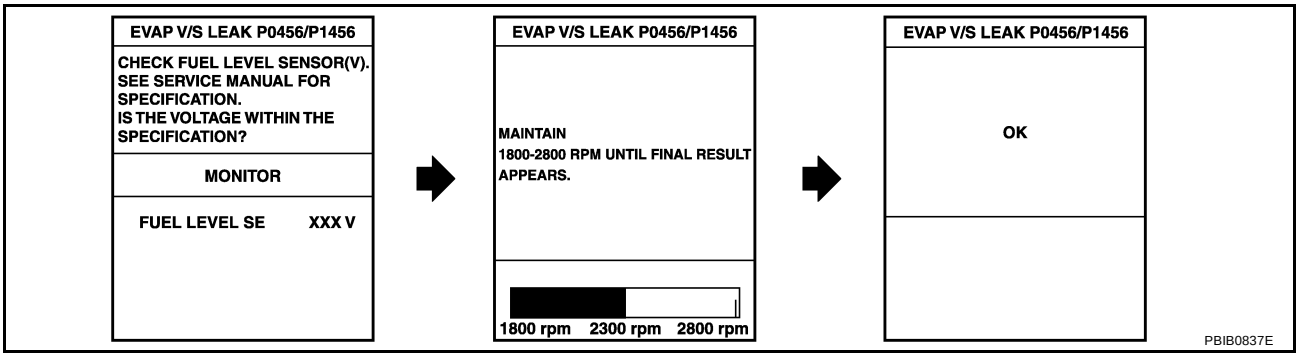

6. Make sure that “OK” is displayed.
   If “NG” is displayed, refer to EC-378, "Diagnostic Procedure" .

   NOTE:
   - **If the engine speed cannot be maintained within the range displayed on CONSULT-II screen, go to EC-78, "Basic Inspection" .**
   - **Make sure that EVAP hoses are connected to EVAP canister purge volume control solenoid valve properly.**

Overall Function Check

ABS006RR

WITH GST

Use this procedure to check the overall function of the EVAP very small leak function. During this check, a 1st trip DTC might not be confirmed.

CAUTION:

- **Never use compressed air, doing so may damage the EVAP system.**
- **Do not start engine.**
- **Do not exceeded 4.12 kPa (0.042 kg/cm^2 , 0.6 psi).**

1. Attach the EVAP service port adapter securely to the EVAP service port.

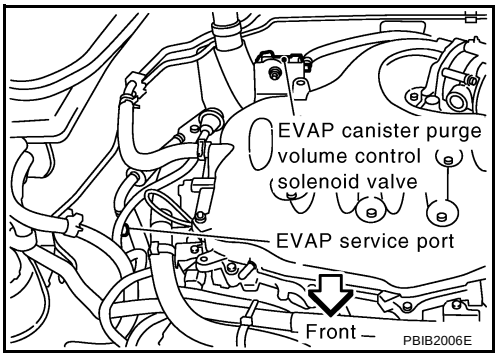

2. Set the pressure pump and a hose.
3. Also set a vacuum gauge via 3-way connector and a hose.
4. Turn ignition switch ON.
5. Connect GST and select Service $08.
6. Using Service $08 control the EVAP canister vent control valve (close).
7. Apply pressure and make sure the following conditions are satisfied.
   Pressure to be applied: 2.7 kPa (20 mmHg, 0.79 inHg)
   Time to be waited after the pressure drawn in to the EVAP system and the pressure to be dropped: 60 seconds and the pressure should not be dropped more than 0.4 kPa (3 mmHg, 0.12 inHg).
   If NG, go to EC-378, "Diagnostic Procedure" .
   If OK, go to next step.

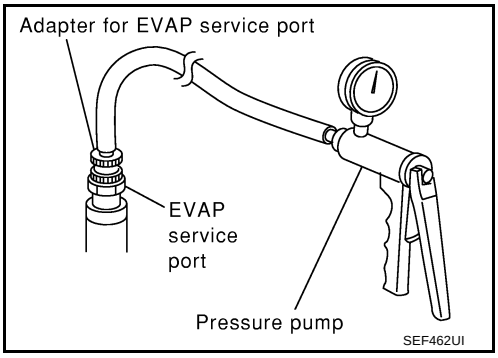

8. Disconnect GST.
9. Start engine and warm it up to normal operating temperature.
10. Turn ignition switch OFF and wait at least 10 seconds.
11. Restart engine and let it idle for 90 seconds.
12. Keep engine speed at 2,000 rpm for 30 seconds.
13. Turn ignition switch OFF.

    NOTE:
    For more information, refer to GST instruction manual.

Diagnostic Procedure

ABS006RS

1. CHECK FUEL FILLER CAP DESIGN

1. Turn ignition switch OFF.
2. Check for genuine NISSAN fuel filler cap design.

OK or NG

OK >> GO TO 2.
NG >> Replace with genuine NISSAN fuel filler cap.

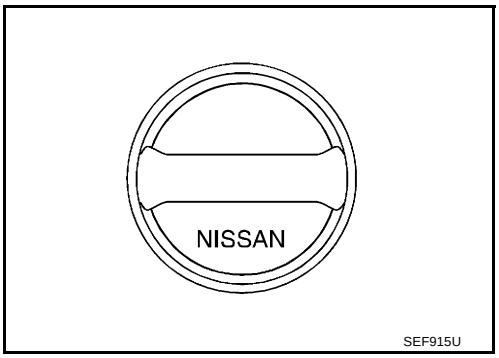

2. CHECK FUEL FILLER CAP INSTALLATION

Check that the cap is tightened properly by rotating the cap clockwise.

OK or NG

OK >> GO TO 3.
NG >> 1. Open fuel filler cap, then clean cap and fuel filler neck threads using air blower.
2. Retighten until ratcheting sound is heard.

3. CHECK FUEL FILLER CAP FUNCTION

Check for air releasing sound while opening the fuel filler cap.

OK or NG

OK >> GO TO 5.
NG >> GO TO 4.

4. CHECK FUEL TANK VACUUM RELIEF VALVE

Refer to EC-42, "FUEL TANK VACUUM RELIEF VALVE (BUILT INTO FUEL FULLER CAP)" .

OK or NG

OK >> GO TO 5.
NG >> Replace fuel filler cap with a genuine one.

5. INSTALL THE PRESSURE PUMP

To locate the EVAP leak, install EVAP service port adapter and pressure pump to EVAP service port securely. For the location of EVAP service port, refer to EC-40, "EVAPORATIVE EMISSION LINE DRAWING" .

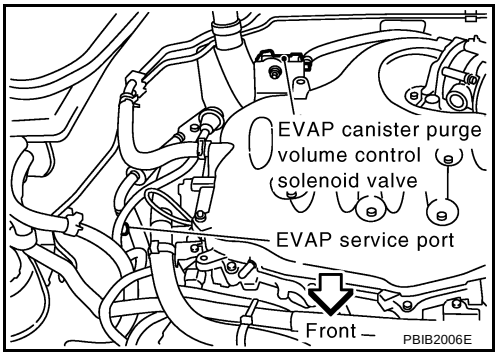

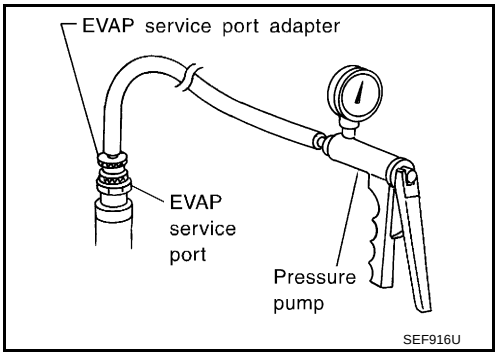

NOTE:
Improper installation of the EVAP service port adapter to the EVAP service port may cause leaking.

Models with CONSULT-II>>GO TO 6.
Models without CONSULT-II>>GO TO 7.

6. CHECK FOR EVAP LEAK

With CONSULT-II

1. Turn ignition switch ON.
2. Select “EVAP SYSTEM CLOSE” of “WORK SUPPORT” mode with CONSULT-II.
3. Touch “START” and apply pressure into the EVAP line until the pressure indicator reaches the middle of the bar graph.

   CAUTION:
   - **Never use compressed air or a high pressure pump.**
   - **Do not exceed 4.12 kPa (0.042 kg/cm^2 , 0.6 psi) of pressure in the system.**

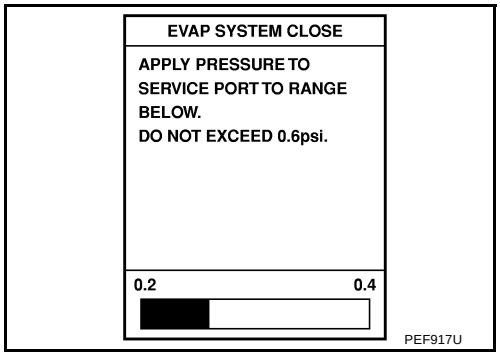

4. Using EVAP leak detector, locate the EVAP leak. For the leak detector, refer to the instruction manual for more details.
   Refer to EC-40, "EVAPORATIVE EMISSION LINE DRAWING" .

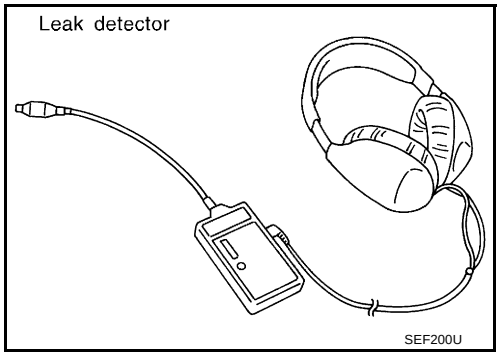

OK or NG

OK >> GO TO 8.
NG >> Repair or replace.

7. CHECK FOR EVAP LEAK

Without CONSULT-II

1. Turn ignition switch OFF.
2. Apply 12 volts DC to EVAP canister vent control valve. The valve will close. (Continue to apply 12 volts until the end of test.)

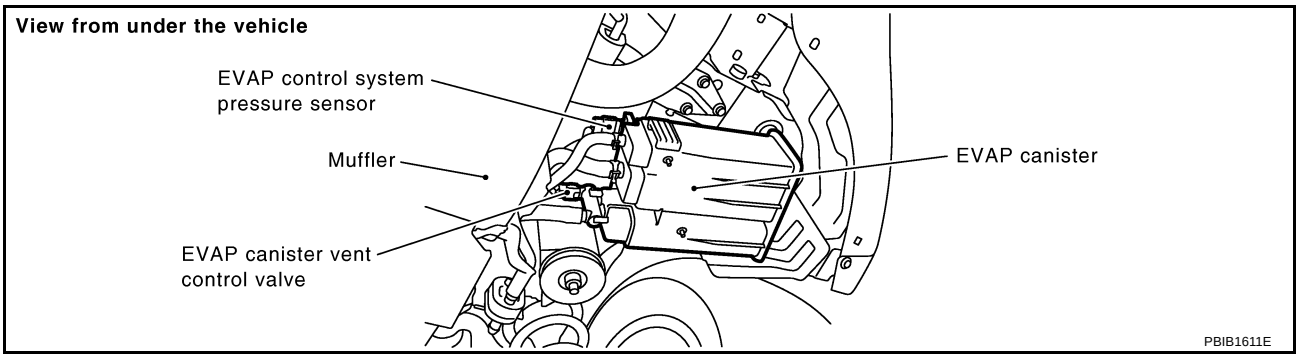

3. Pressurize the EVAP line using pressure pump with 1.3 to 2.7 kPa (10 to 20 mmHg, 0.39 to 0.79 inHg), then remove pump and EVAP service port adapter.

   CAUTION:
   - **Never use compressed air or a high pressure pump.**
   - **Do not exceed 4.12 kPa (0.042 kg/cm^2 , 0.6 psi) of pressure in the system.**
4. Using EVAP leak detector, locate the EVAP leak. For the leak detector, refer to the instruction manual for more details. Refer to EC-40, "EVAPORATIVE EMISSION LINE DRAWING" .

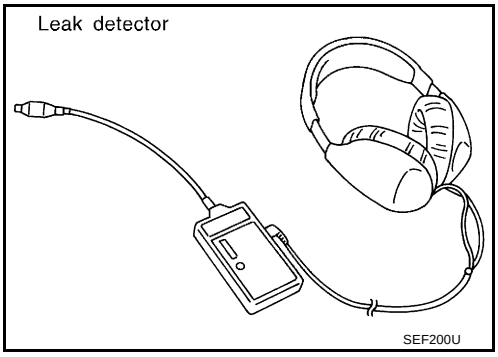

OK or NG

OK >> GO TO 8.
NG >> Repair or replace.

8. CHECK EVAP CANISTER VENT CONTROL VALVE

Check the following.

- EVAP canister vent control valve is installed properly.
  Refer to EC-43, "Removal and Installation" .
- EVAP canister vent control valve.
  Refer to EC-348, "Component Inspection" .

OK or NG

OK >> GO TO 9.
NG >> Repair or replace EVAP canister vent control valve and O-ring.

9. CHECK IF EVAP CANISTER SATURATED WITH WATER

1. Remove EVAP canister with EVAP canister vent control valve and EVAP control system pressure sensor attached.
2. Does water drain from the EVAP canister?

Yes or No

Yes >> GO TO 10.
No (With CONSULT-II)>>GO TO 12.
No (Without CONSULT-II)>>GO TO 13.

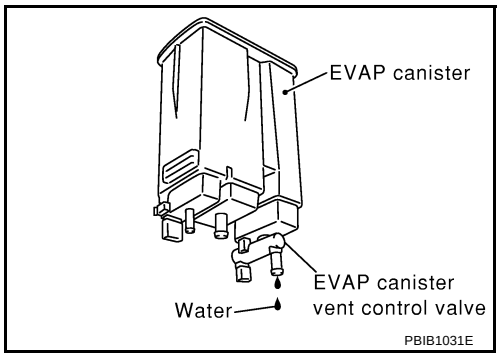

10. CHECK EVAP CANISTER

Weigh the EVAP canister with the EVAP canister vent control valve and EVAP control system pressure sensor attached.

The weight should be less than 2.1 kg (4.6 lb).

OK or NG

OK (With CONSULT-II)>>GO TO 12.
OK (Without CONSULT-II)>>GO TO 13.
NG >> GO TO 11.

11. DETECT MALFUNCTIONING PART

Check the following.

- EVAP canister for damage
- EVAP hose between EVAP canister and vehicle frame for clogging or poor connection

>> Repair hose or replace EVAP canister.

12. CHECK EVAP CANISTER PURGE VOLUME CONTROL SOLENOID VALVE OPERATION

With CONSULT-II

1. Disconnect vacuum hose to EVAP canister purge volume control solenoid valve at EVAP service port.
2. Start engine.
3. Perform “PURG VOL CONT/V” in “ACTIVE TEST” mode.
4. Touch “Qu” on CONSULT-II screen to increase “PURG VOL CONT/V” opening to 100%.
5. Check vacuum hose for vacuum when revving engine up to 2,000 rpm.

OK or NG

OK >> GO TO 15.
NG >> GO TO 14.

ACTIVE TEST	
PURG VOL CONT/V	XXX %
MONITOR	
ENG SPEED	XXX rpm
A/F ALPHA-B1	XX %
A/F ALPHA-B2	XX %

PBIB1678E

13. CHECK EVAP CANISTER PURGE VOLUME CONTROL SOLENOID VALVE OPERATION

Without CONSULT-II

1. Start engine and warm it up to normal operating temperature.
2. Stop engine.
3. Disconnect vacuum hose to EVAP canister purge volume control solenoid valve at EVAP service port.
4. Start engine and let it idle for at least 80 seconds.
5. Check vacuum hose for vacuum when revving engine up to 2,000 rpm.

Vacuum should exist.

OK or NG

OK >> GO TO 16.
NG >> GO TO 14.

14. CHECK VACUUM HOSE

Check vacuum hoses for clogging or disconnection. Refer to EC-120, "Vacuum Hose Drawing" .

OK or NG

OK >> GO TO 15.
NG >> Repair or reconnect the hose.

15. CHECK EVAP CANISTER PURGE VOLUME CONTROL SOLENOID VALVE

Refer to EC-341, "Component Inspection" .

OK or NG

OK >> GO TO 16.
NG >> Replace EVAP canister purge volume control solenoid valve.

16. CHECK FUEL TANK TEMPERATURE SENSOR

Refer to EC-271, "Component Inspection" .

OK or NG

OK >> GO TO 17.
NG >> Replace fuel level sensor unit.

17. CHECK EVAP CONTROL SYSTEM PRESSURE SENSOR

Refer to EC-358, "Component Inspection" .

OK or NG

OK >> GO TO 18.
NG >> Replace EVAP control system pressure sensor.

18. CHECK EVAP PURGE LINE

Check EVAP purge line (pipe, rubber tube, fuel tank and EVAP canister) for cracks or improper connection.
Refer to EC-40, "EVAPORATIVE EMISSION LINE DRAWING" .

OK or NG

OK >> GO TO 19.
NG >> Repair or reconnect the hose.

19. CLEAN EVAP PURGE LINE

Clean EVAP purge line (pipe and rubber tube) using air blower.

>> GO TO 20.

20. CHECK EVAP/ORVR LINE

Check EVAP/ORVR line between EVAP canister and fuel tank for clogging, kink, looseness and improper connection. For location, refer to EC-46, "ON BOARD REFUELING VAPOR RECOVERY (ORVR)" .

OK or NG

OK >> GO TO 21.
NG >> Repair or replace hoses and tubes.

21. CHECK RECIRCULATION LINE

Check recirculation line between filler neck tube and fuel tank for clogging, kink, cracks, looseness and improper connection.

OK or NG

OK >> GO TO 22.
NG >> Repair or replace hose, tube or filler neck tube.

22. CHECK REFUELING EVAP VAPOR CUT VALVE

Refer to EC-49, "Component Inspection" .

OK or NG

OK >> GO TO 23.
NG >> Replace refueling EVAP vapor cut valve with fuel tank.

23. CHECK FUEL LEVEL SENSOR

Refer to DI-25, "CHECK FUEL LEVEL SENSOR UNIT" .

OK or NG

OK >> GO TO 24.
NG >> Replace fuel level sensor unit.

24. CHECK INTERMITTENT INCIDENT

Refer to EC-163, "TROUBLE DIAGNOSIS FOR INTERMITTENT INCIDENT" .

>> **INSPECTION END**

DTC P0460 FUEL LEVEL SENSOR

PFP:25060

Component Description

ABS006RT

The fuel level sensor is mounted in the fuel level sensor unit. The sensor detects a fuel level in the fuel tank and transmits a signal to the “unified meter and A/C amp.”. The “unified meter and A/C amp.” sends the fuel level sensor signal to the ECM through CAN communication line.
It consists of two parts, one is mechanical float and the other is variable resistor. Fuel level sensor output voltage changes depending on the movement of the fuel mechanical float.

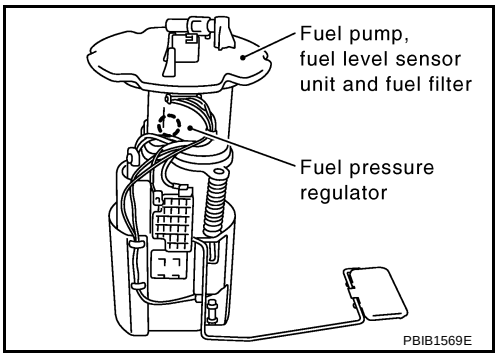

On Board Diagnosis Logic

ABS006RU

NOTE:
If DTC P0460 is displayed with DTC U1000 or U1001, first perform the trouble diagnosis for DTC U1000, U1001. Refer to EC-171 .
When the vehicle is parked, naturally the fuel level in the fuel tank is stable. It means that output signal of the fuel level sensor does not change. If ECM senses sloshing signal from the sensor, fuel level sensor malfunction is detected.

DTC No.	Trouble diagnosis name	DTC detecting condition	Possible cause
P0460 0460	Fuel level sensor circuit noise	Even though the vehicle is parked, a signal being varied is sent from the fuel level sensor to ECM.	● Harness or connectors (The CAN communication line is open or shorted) ● Harness or connectors (The sensor circuit is open or shorted) ● Unified meter and A/C amp. ● Fuel level sensor

DTC Confirmation Procedure

ABS006RV

NOTE:
If DTC Confirmation Procedure has been previously conducted, always turn ignition switch OFF and wait at least 10 seconds before conducting the next test.

WITH CONSULT-II

1. Turn ignition switch ON.
2. Select “DATA MONITOR” mode with CONSULT-II.
3. Start engine and wait maximum of 2 consecutive minutes.
4. If 1st trip DTC is detected, go to EC-386, "Diagnostic Procedure" .

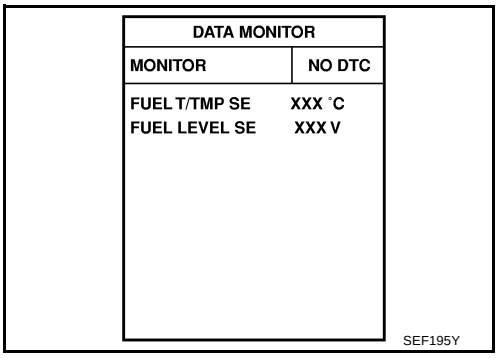

WITH GST

Follow the procedure “WITH CONSULT-II” above.

Diagnostic Procedure

ABS006RW

1. CHECK DTC WITH “UNIFIED METER AND A/C AMP.”

Refer to DI-32, "SELF-DIAGNOSTIC RESULTS" .

OK or NG

OK >> GO TO 2.
NG >> Go to DI-22, "Fuel Level Sensor Signal Inspection" .

2. CHECK INTERMITTENT INCIDENT

Refer to EC-163, "TROUBLE DIAGNOSIS FOR INTERMITTENT INCIDENT" .

>> **INSPECTION END**

Removal and Installation

ABS006RX

FUEL LEVEL SENSOR

Refer to FL-4, "FUEL LEVEL SENSOR UNIT, FUEL FILTER AND FUEL PUMP ASSEMBLY" .

DTC P0461 FUEL LEVEL SENSOR

PFP:25060

Component Description

ABS006RY

The fuel level sensor is mounted in the fuel level sensor unit. The sensor detects a fuel level in the fuel tank and transmits a signal to the “unified meter and A/C amp.”. The “unified meter and A/C amp.” sends the fuel level sensor signal to the ECM through CAN communication line.
It consists of two parts, one is mechanical float and the other is variable resistor. Fuel level sensor output voltage changes depending on the movement of the fuel mechanical float.

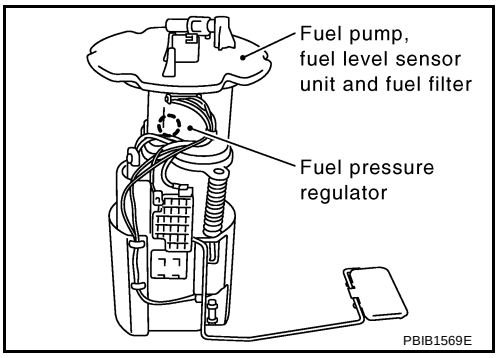

On Board Diagnosis Logic

ABS006RZ

NOTE:
If DTC P0461 is displayed with DTC U1000 or U1001, first perform the trouble diagnosis for DTC U1000, U1001. Refer to EC-171 .
Driving long distances naturally affect fuel gauge level.
This diagnosis detects the fuel gauge malfunction of the gauge not moving even after a long distance has been driven.

DTC No.	Trouble diagnosis name	DTC detecting condition	Possible cause
P0461 0461	Fuel level sensor circuit range/performance	The output signal of the fuel level sensor does not change within the specified range even though the vehicle has been driven a long distance.	● Harness or connectors (The CAN communication line is open or shorted) ● Harness or connectors (The sensor circuit is open or shorted) ● Unified meter and A/C amp. ● Fuel level sensor

Overall Function Check

ABS006S0

Use this procedure to check the overall function of the fuel level sensor function. During this check, a 1st trip DTC might not be confirmed.

WARNING:
When performing following procedure, be sure to observe the handling of the fuel. Refer to FL-10, "FUEL TANK" .
TESTING CONDITION:
Before starting overall function check, preparation of draining fuel and refilling fuel is required.

WITH CONSULT-II

NOTE:
Start from step 10, if it is possible to confirm that the fuel cannot be drained by 30 ℓ (7-7/8 US gal, 6-5/8 Imp gal) in advance.

1. Prepare a fuel container and a spare hose.
2. Release fuel pressure from fuel line, refer to EC-99, "FUEL PRESSURE RELEASE" .
3. Remove the fuel feed hose on the fuel level sensor unit.
4. Connect a spare fuel hose where the fuel feed hose was removed.
5. Turn ignition switch OFF and wait at least 10 seconds then turn ON.
6. Select “FUEL LEVEL SE” in “DATA MONITOR” mode with CONSULT-II.

7. Check “FUEL LEVEL SE” output voltage and note it.
8. Select “FUEL PUMP” in “ACTIVE TEST” mode with CONSULT-II.
9. Touch ON and drain fuel approximately 30 ℓ (7-7/8 US gal, 6-5/8 Imp gal) and stop it.
10. Check “FUEL LEVEL SE” output voltage and note it.
11. Fill fuel into the fuel tank for 30 ℓ (7-7/8 US gal, 6-5/8 Imp gal).
12. Check “FUEL LEVEL SE” output voltage and note it.
13. Confirm whether the voltage changes more than 0.03V during step 7 to 10 and 10 to 12.
    If NG, go to EC-388, "Diagnostic Procedure" .

DATA MONITOR	
MONITOR	NO DTC
FUEL T/TMP SE	XXX °C
FUEL LEVEL SE	XXX V

SEF195Y

WITH GST

NOTE:
Start from step 8, if it is possible to confirm that the fuel cannot be drained by 30 ℓ (7-7/8 US gal, 6-5/8 Imp gal) in advance.

1. Prepare a fuel container and a spare hose.
2. Release fuel pressure from fuel line. Refer to EC-99, "FUEL PRESSURE RELEASE" .
3. Remove the fuel feed hose on the fuel level sensor unit.
4. Connect a spare fuel hose where the fuel feed hose was removed.
5. Turn ignition switch ON.
6. Drain fuel by 30 ℓ (7-7/8 US gal, 6-5/8 Imp gal) from the fuel tank using proper equipment.
7. Confirm that the fuel gauge indication varies.
8. Fill fuel into the fuel tank for 30 ℓ (7-7/8 US gal, 6-5/8 Imp gal).
9. Confirm that the fuel gauge indication varies.
10. If NG, go to EC-388, "Diagnostic Procedure" .

Diagnostic Procedure

ABS006S1

1. CHECK DTC WITH “UNIFIED METER AND A/C AMP.”

Refer to DI-32, "SELF-DIAGNOSTIC RESULTS" .

OK or NG

OK >> GO TO 2.
NG >> Go to DI-22, "Fuel Level Sensor Signal Inspection" .

2. CHECK INTERMITTENT INCIDENT

Refer to EC-163, "TROUBLE DIAGNOSIS FOR INTERMITTENT INCIDENT" .

>> **INSPECTION END**

Removal and Installation

ABS006S2

FUEL LEVEL SENSOR

Refer to FL-4, "FUEL LEVEL SENSOR UNIT, FUEL FILTER AND FUEL PUMP ASSEMBLY" .

DTC P0462, P0463 FUEL LEVEL SENSOR

PFP:25060

Component Description

ABS006S3

The fuel level sensor is mounted in the fuel level sensor unit. The sensor detects a fuel level in the fuel tank and transmits a signal to the “unified meter and A/C amp.”. The “unified meter and A/C amp.” sends the fuel level sensor signal to the ECM through CAN communication line.
It consists of two parts, one is mechanical float and the other is variable resistor. Fuel level sensor output voltage changes depending on the movement of the fuel mechanical float.

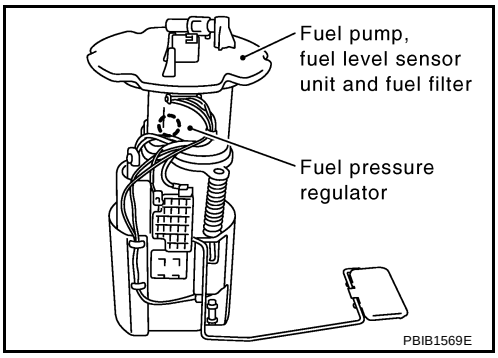

On Board Diagnosis Logic

ABS006S4

NOTE:
If DTC P0462 or P0463 is displayed with DTC U1000 or U1001, first perform the trouble diagnosis for DTC U1000, U1001. Refer to EC-171 .
This diagnosis indicates the former, to detect open or short circuit malfunction.

DTC No.	Trouble diagnosis name	DTC detecting condition	Possible cause
P0462 0462	Fuel level sensor circuit low input	An excessively low voltage from the sensor is sent to ECM.	● Harness or connectors (The CAN communication line is open or shorted) ● Harness or connectors (The sensor circuit is open or shorted) ● Unified meter and A/C amp. ● Fuel level sensor
P0463 0463	Fuel level sensor circuit high input	An excessively high voltage from the sensor is sent to ECM.	

DTC Confirmation Procedure

ABS006S5

NOTE:
If DTC Confirmation Procedure has been previously conducted, always turn ignition switch OFF and wait at least 10 seconds before conducting the next test.
TESTING CONDITION:
Before performing the following procedure, confirm that battery voltage is more than 11V at ignition switch ON.

WITH CONSULT-II

1. Turn ignition switch ON.
2. Select “DATA MONITOR” mode with CONSULT-II.
3. Wait at least 5 seconds.
4. If 1st trip DTC is detected, go to EC-390, "Diagnostic Procedure" .

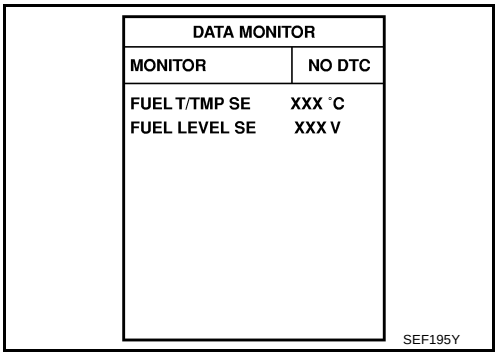

WITH GST

Follow the procedure “WITH CONSULT-II” above.

Diagnostic Procedure

ABS006S7

1. CHECK DTC WITH “UNIFIED METER AND A/C AMP.”

Refer to DI-32, "SELF-DIAGNOSTIC RESULTS" .

OK or NG

OK >> GO TO 2.
NG >> Go to DI-22, "Fuel Level Sensor Signal Inspection" .

2. CHECK INTERMITTENT INCIDENT

Refer to EC-163, "TROUBLE DIAGNOSIS FOR INTERMITTENT INCIDENT" .

>> **INSPECTION END**

Removal and Installation

ABS006S8

FUEL LEVEL SENSOR

Refer to FL-4, "FUEL LEVEL SENSOR UNIT, FUEL FILTER AND FUEL PUMP ASSEMBLY" .

DTC P0500 VSS

PFP:32702

Description

ABS006S9

NOTE:
If DTC P0500 is displayed with DTC U1000 or U1001, first perform the trouble diagnosis for DTC U1000, U1001. Refer to EC-171 .
The vehicle speed signal is sent to the “unified meter and A/C amp.” from the “ABS actuator and electric unit (control unit)” by CAN communication line. The “unified meter and A/C amp.” then sends a signal to the ECM by CAN communication line.

On Board Diagnosis Logic

ABS006SA

DTC No.	Trouble diagnosis name	DTC detecting condition	Possible cause
P0500 0500	Vehicle speed sensor	The almost 0 km/h (0 MPH) signal from vehicle speed sensor is sent to ECM even when vehicle is being driven.	● Harness or connectors (The CAN communication line is open or shorted) ● Harness or connectors (The vehicle speed signal circuit is open or shorted) ● Wheel sensor ● Unified meter and A/C amp. ● ABS actuator and electric unit (control unit)

DTC Confirmation Procedure

ABS006SB

CAUTION:
Always drive vehicle at a safe speed.

NOTE:
If DTC Confirmation Procedure has been previously conducted, always turn ignition switch OFF and wait at least 10 seconds before conducting the next test.

TESTING CONDITION:
Steps 1 and 2 may be conducted with the drive wheels lifted in the shop or by driving the vehicle. If a road test is expected to be easier, it is unnecessary to lift the vehicle.

WITH CONSULT-II

1. Start engine (TCS switch or VDC switch OFF).
2. Read “VHCL SPEED SE” in “DATA MONITOR” mode with CONSULT-II. The vehicle speed on CONSULT-II should exceed 10 km/h (6 MPH) when rotating wheels with suitable gear position.
   If NG, go to EC-392, "Diagnostic Procedure" .
   If OK, go to following step.
3. Select “DATA MONITOR” mode with CONSULT-II.
4. Warm engine up to normal operating temperature.
5. Maintain the following conditions for at least 60 consecutive seconds.

ENG SPEED	1,700 - 6,000 rpm
COOLAN TEMP/S	More than 70°C (158°F)
B/FUEL SCHDL	4.9 - 31.8 msec
Selector lever	Except P or N position
PW/ST SIGNAL	OFF

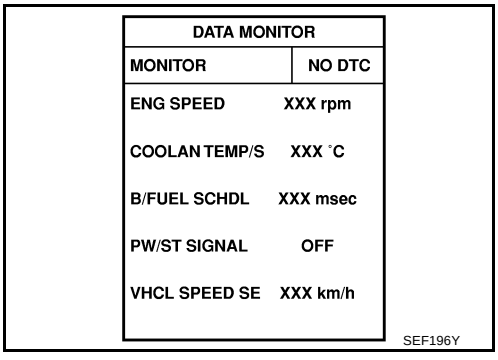

6. If 1st trip DTC is detected, go to EC-392, "Diagnostic Procedure" .

Overall Function Check

ABS006SC

Use this procedure to check the overall function of the vehicle speed sensor circuit. During this check, a 1st trip DTC might not be confirmed.

WITH GST

1. Lift up drive wheels.
2. Start engine.
3. Read vehicle speed sensor signal in Service $01 with GST.
   The vehicle speed sensor on GST should be able to exceed 10 km/h (6 MPH) when rotating wheels with suitable gear position.
4. If NG, go to EC-392, "Diagnostic Procedure" .

Diagnostic Procedure

ABS006SD

1. CHECK DTC WITH “ABS ACTUATOR AND ELECTRIC UNIT (CONTROL UNIT)”

Refer to BRC-12, "TROUBLE DIAGNOSIS" .

OK or NG

OK >> GO TO 2.
NG >> Repair or replace.

2. CHECK DTC WITH “UNIFIED METER AND A/C AMP.”

Refer to DI-5, "COMBINATION METERS" .

>> **INSPECTION END**

DTC P0506 ISC SYSTEM

PFP:23781

Description

ABS006SE

NOTE:
If DTC P0506 is displayed with other DTC, first perform the trouble diagnosis for the other DTC.
The ECM controls the engine idle speed to a specified level through the fine adjustment of the air, which is let into the intake manifold, by operating the electric throttle control actuator. The operating of the throttle valve is varied to allow for optimum control of the engine idling speed. The crankshaft position sensor (POS) detects the actual engine speed and sends a signal to the ECM.
The ECM controls the electric throttle control actuator so that the engine speed coincides with the target value memorized in the ECM. The target engine speed is the lowest speed at which the engine can operate steadily. The optimum value stored in the ECM is determined by taking into consideration various engine conditions, such as during warming up, deceleration, and engine load (air conditioner, power steering and cooling fan operation, etc.).

On Board Diagnosis Logic

ABS006SF

DTC No.	Trouble diagnosis name	DTC detecting condition	Possible cause
P0506 0506	Idle speed control system RPM lower than expected	The idle speed is less than the target idle speed by 100 rpm or more.	● Electric throttle control actuator ● Intake air leak

DTC Confirmation Procedure

ABS006SG

NOTE:
- If DTC Confirmation Procedure has been previously conducted, always turn ignition switch OFF and wait at least 10 seconds before conducting the next test.
- **If the target idle speed is out of the specified value, perform, EC-97, "Idle Air Volume Learning" , before conducting DTC Confirmation Procedure. For the target idle speed, refer to the EC-705, "SERVICE DATA AND SPECIFICATIONS (SDS)" .**

TESTING CONDITION:
- **Before performing the following procedure, confirm that battery voltage is more than 11V at idle.**
- **Always perform the test at a temperature above –10°C (14°F).**

WITH CONSULT-II

1. Open engine hood.
2. Start engine and warm it up to normal operating temperature.
3. Turn ignition switch OFF and wait at least 10 seconds.
4. Turn ignition switch ON again and select “DATA MONITOR” mode with CONSULT-II.
5. Start engine and run it for at least 1 minute at idle speed.
6. If 1st trip DTC is detected, go to EC-394, "Diagnostic Procedure" .

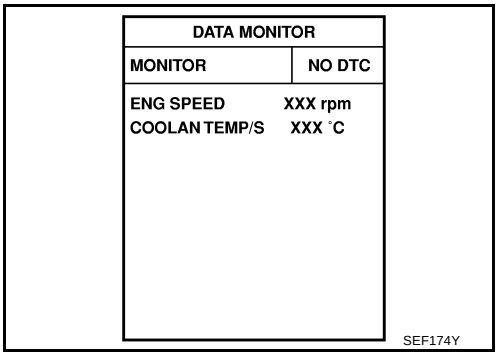

WITH GST

Follow the procedure “WITH CONSULT-II” above.

Diagnostic Procedure

ABS006SH

1. CHECK INTAKE AIR LEAK

1. Start engine and let it idle.
2. Listen for an intake air leak after the mass air flow sensor.

OK or NG

OK >> GO TO 2.
NG >> Discover air leak location and repair.

2. REPLACE ECM

1. Stop engine.
2. Replace ECM.
3. Perform initialization of IVIS(NATS) system and registration of all IVIS(NATS) ignition key IDs. Refer to BL-215, "ECM Re-Communicating Function" .
4. Perform EC-96, "VIN Registration" .
5. Perform EC-96, "Accelerator Pedal Released Position Learning" .
6. Perform EC-96, "Throttle Valve Closed Position Learning" .
7. Perform EC-97, "Idle Air Volume Learning" .

>> **INSPECTION END**

DTC P0507 ISC SYSTEM

PFP:23781

Description

ABS006SI

NOTE:
If DTC P0507 is displayed with other DTC, first perform the trouble diagnosis for the other DTC.
The ECM controls the engine idle speed to a specified level through the fine adjustment of the air, which is let into the intake manifold, by operating the electric throttle control actuator. The operating of the throttle valve is varied to allow for optimum control of the engine idling speed. The crankshaft position sensor (POS) detects the actual engine speed and sends a signal to the ECM.
The ECM controls the electric throttle control actuator so that the engine speed coincides with the target value memorized in the ECM. The target engine speed is the lowest speed at which the engine can operate steadily. The optimum value stored in the ECM is determined by taking into consideration various engine conditions, such as during warming up, deceleration, and engine load (air conditioner, power steering and cooling fan operation, etc.).

On Board Diagnosis Logic

ABS006SJ

DTC No.	Trouble diagnosis name	DTC detecting condition	Possible cause
P0507 0507	Idle speed control system RPM higher than expected	The idle speed is more than the target idle speed by 200 rpm or more.	● Electric throttle control actuator ● Intake air leak ● PCV system

DTC Confirmation Procedure

ABS006SK

NOTE:
- If DTC Confirmation Procedure has been previously conducted, always turn ignition switch OFF and wait at least 10 seconds before conducting the next test.
- **If the target idle speed is out of the specified value, perform, EC-97, "Idle Air Volume Learning" , before conducting DTC Confirmation Procedure. For the target idle speed, refer to the EC-705, "SERVICE DATA AND SPECIFICATIONS (SDS)" .**

TESTING CONDITION:
- **Before performing the following procedure, confirm that battery voltage is more than 11V at idle.**
- **Always perform the test at a temperature above –10°C (14°F).**

WITH CONSULT-II

1. Open engine hood.
2. Start engine and warm it up to normal operating temperature.
3. Turn ignition switch OFF and wait at least 10 seconds.
4. Turn ignition switch ON again and select “DATA MONITOR” mode with CONSULT-II.
5. Start engine and run it for at least 1 minute at idle speed.
6. If 1st trip DTC is detected, go to EC-396, "Diagnostic Procedure" .

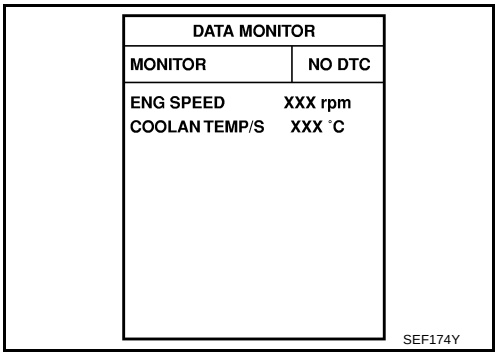

WITH GST

Follow the procedure “WITH CONSULT-II” above.

Diagnostic Procedure

ABS006SL

1. CHECK PCV HOSE CONNECTION

Confirm that PCV hose is connected correctly.

OK or NG

OK >> GO TO 2.
NG >> Repair or replace.

2. CHECK INTAKE AIR LEAK

1. Start engine and let it idle.
2. Listen for an intake air leak after the mass air flow sensor.

OK or NG

OK >> GO TO 3.
NG >> Discover air leak location and repair.

3. REPLACE ECM

1. Stop engine.
2. Replace ECM.
3. Perform initialization of IVIS(NATS) system and registration of all IVIS(NATS) ignition key IDs. Refer to BL-215, "ECM Re-Communicating Function" .
4. Perform EC-96, "VIN Registration" .
5. Perform EC-96, "Accelerator Pedal Released Position Learning" .
6. Perform EC-96, "Throttle Valve Closed Position Learning" .
7. Perform EC-97, "Idle Air Volume Learning" .

>> **INSPECTION END**

DTC P0550 PSP SENSOR

PFP:49763

Component Description

ABS006SM

Power steering pressure (PSP) sensor is installed to the power steering high-pressure tube and detects a power steering load. This sensor is a potentiometer which transforms the power steering load into output voltage, and emits the voltage signal to the ECM. The ECM controls the electric throttle control actuator and adjusts the throttle valve opening angle to increase the engine speed and adjusts the idle speed for the increased load.

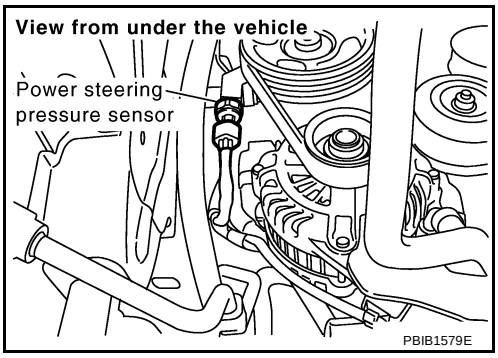

CONSULT-II Reference Value in Data Monitor Mode

ABS006SN

Specification data are reference values.

MONITOR ITEM	CONDITION		SPECIFICATION
PW/ST SIGNAL	● Engine: After warming up, idle the engine	Steering wheel: Not being turned. (Forward direction)	OFF
		Steering wheel: Being turned.	ON

On Board Diagnosis Logic

ABS006SO

The MIL will not light up for this diagnosis.

NOTE:
If DTC P0550 is displayed with DTC P1229, first perform the trouble diagnosis for DTC P1229. Refer to EC-483, "DTC P1229 SENSOR POWER SUPPLY" .

DTC No.	Trouble diagnosis name	DTC detecting condition	Possible cause
P0550 0550	Power steering pressure sensor circuit	An excessively low or high voltage from the sensor is sent to ECM.	● Harness or connectors (The sensor circuit is open or shorted) ● Power steering pressure sensor

DTC Confirmation Procedure

ABS006SP

NOTE:
If DTC Confirmation Procedure has been previously conducted, always turn ignition switch OFF and wait at least 10 seconds before conducting the next test.

WITH CONSULT-II

1. Turn ignition switch ON.
2. Select “DATA MONITOR” mode with CONSULT-II.
3. Start engine and let it idle for at least 5 seconds.
4. If 1st trip DTC is detected, go to EC-399, "Diagnostic Procedure" .

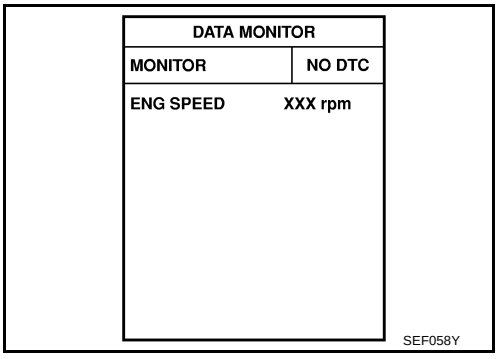

WITH GST

Follow the procedure “WITH CONSULT-II” above.

Wiring Diagram

ABS006SQ

EC-PS/SEN-01

: DETECTABLE LINE FOR DTC

: NON-DETECTABLE LINE FOR DTC

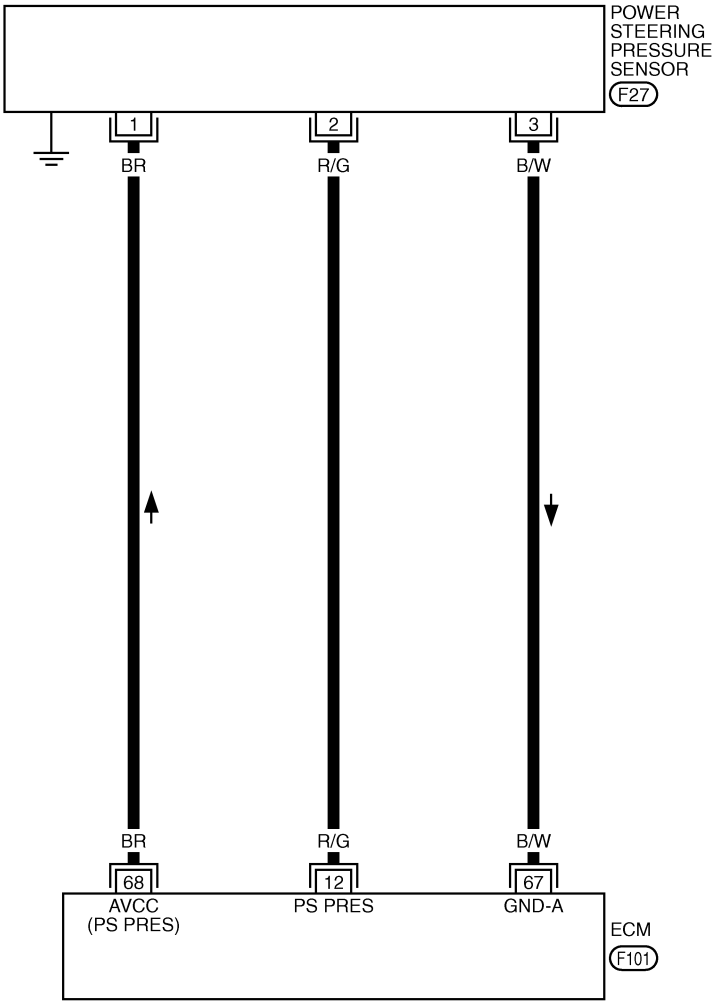

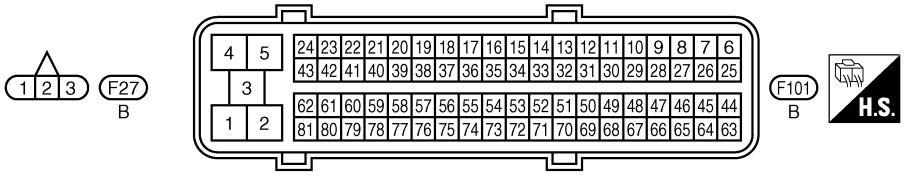

TBWM0302E

Specification data are reference values and are measured between each terminal and ground.

CAUTION:
Do not use ECM ground terminals when measuring input/output voltage. Doing so may result in damage to the ECM's transistor. Use a ground other than ECM terminals, such as the ground.

TERMINAL NO.	WIRE COLOR	ITEM	CONDITION	DATA (DC Voltage)
12	R/G	Power steering pressure sensor	**[Engine is running]** ● Steering wheel: Being turned.	0.5 - 4.5V
			[Engine is running] ● Steering wheel: Not being turned.	0.4 - 0.8V
67	B/W	Sensor ground	**[Engine is running]** ● **Warm-up condition** ● Idle speed	Approximately 0V
68	BR	Sensor power supply (Power steering pressure sensor)	**[Ignition switch: ON]**	Approximately 5V

Diagnostic Procedure

ABS006SR

1. CHECK GROUND CONNECTIONS

1. Turn ignition switch OFF.
2. Loosen and retighten ground three screws on the body. Refer to EC-170, "Ground Inspection" .

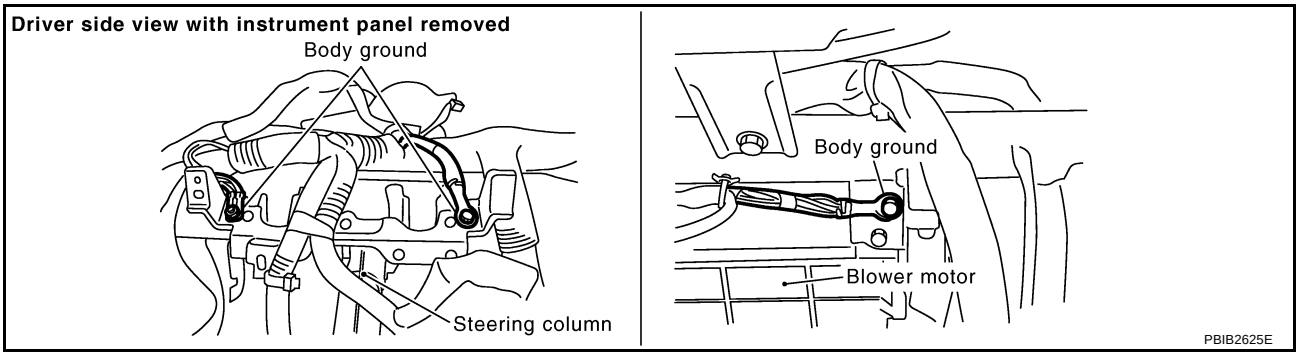

OK or NG

OK >> GO TO 2.
NG >> Repair or replace ground connections.

2. CHECK PSP SENSOR POWER SUPPLY CIRCUIT

1. Disconnect power steering pressure (PSP) sensor harness connector.
2. Turn ignition switch ON.

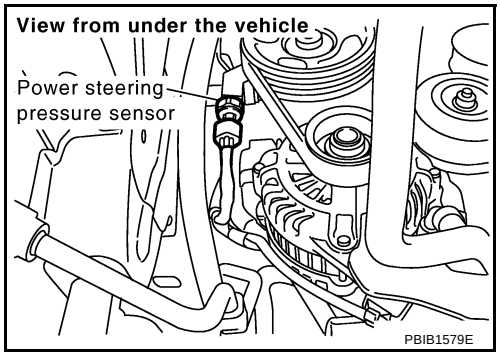

3. Check voltage between PSP sensor terminal 1 and ground with CONSULT-II or tester.

Voltage: Approximately 5V

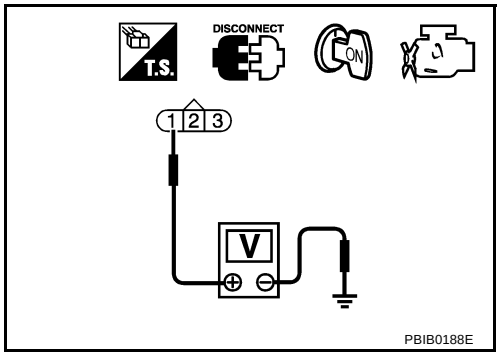

OK or NG

OK >> GO TO 3.
NG >> Repair open circuit or short to ground or short to power in harness or connectors.

3. CHECK PSP SENSOR GROUND CIRCUIT FOR OPEN AND SHORT

1. Turn ignition switch OFF.
2. Disconnect ECM harness connector.
3. Check harness continuity between PSP sensor terminal 3 and ECM terminal 67. Refer to Wiring Diagram.

Continuity should exist.

4. Also check harness for short to ground short to power.

OK or NG

OK >> GO TO 4.
NG >> Repair open circuit or short to ground or short to power in harness or connectors.

4. CHECK PSP SENSOR INPUT SIGNAL CIRCUIT FOR OPEN AND SHORT

1. Check harness continuity between ECM terminal 12 and PSP sensor terminal 2.

Continuity should exist.

2. Also check harness for short to ground and short to power.

OK or NG

OK >> GO TO 5.
NG >> Repair open circuit or short to ground or short to power in harness or connectors.

5. CHECK PSP SENSOR

Refer to EC-401, "Component Inspection" .

OK or NG

OK >> GO TO 6.
NG >> Replace PSP sensor.

6. CHECK INTERMITTENT INCIDENT

Refer to EC-163, "TROUBLE DIAGNOSIS FOR INTERMITTENT INCIDENT" .

>> **INSPECTION END**

Component Inspection

ABS006SS

POWER STEERING PRESSURE SENSOR

1. Reconnect all harness connectors disconnected.
2. Start engine and let it idle.
3. Check voltage between ECM terminal 12 and ground under the following conditions.

Condition	Voltage
Steering wheel: Being turned.	0.5 - 4.5V
Steering wheel: Not being turned.	0.4 - 0.8V

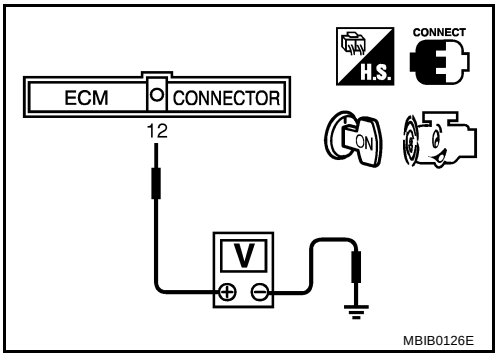

Removal and Installation

ABS00A3Z

POWER STEERING PRESSURE SENSOR

Refer to PS-41, "HYDRAULIC LINE" .

DTC P0605 ECM

PFP:23710

Component Description

ABS006ST

The ECM consists of a microcomputer and connectors for signal input and output and for power supply. The ECM controls the engine.

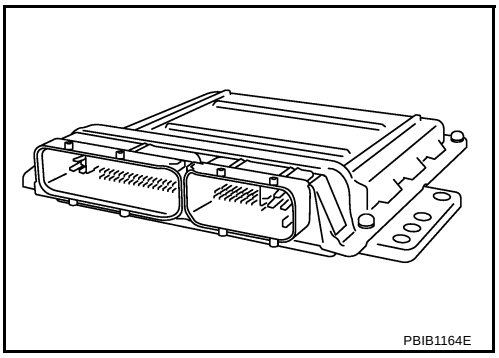

On Board Diagnosis Logic

ABS006SU

This self-diagnosis has one or two trip detection logic.

DTC No.	Trouble diagnosis name	DTC detecting condition		Possible cause
P0605 0605	Engine control module	A)	ECM calculation function is malfunctioning.	● ECM
		B)	ECM EEP-ROM system is malfunctioning.	
		C)	ECM self shut-off function is malfunctioning.	

FAIL-SAFE MODE

ECM enters fail-safe mode when the malfunction A is detected.

Detected items	Engine operation condition in fail-safe mode
Malfunction A	● ECM stops the electric throttle control actuator control, throttle valve is maintained at a fixed opening (approx. 5 degrees) by the return spring. ● ECM deactivates ICC operation. ● ECM deactivates ASCD operation.

DTC Confirmation Procedure

ABS006SV

Perform “PROCEDURE FOR MALFUNCTION A” first. If the 1st trip DTC cannot be confirmed, perform PROCEDURE FOR MALFUNCTION B. If there is no malfunction on PROCEDURE FOR MALFUNCTION B, perform PROCEDURE FOR MALFUNCTION C.

NOTE:

If DTC Confirmation Procedure has been previously conducted, always turn ignition switch OFF and wait at least 10 seconds before conducting the next test.

PROCEDURE FOR MALFUNCTION A

With CONSULT-II

1. Turn ignition switch ON.
2. Select “DATA MONITOR” mode with CONSULT-II.
3. If 1st trip DTC is detected, go to EC-403, "Diagnostic Procedure"
.

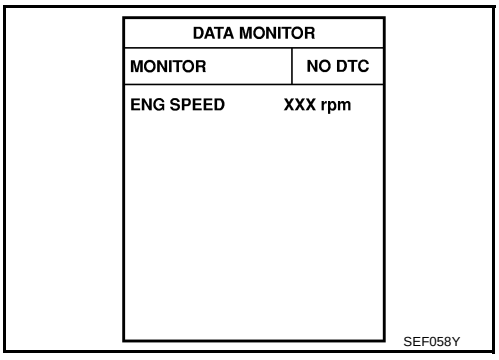

With GST

Follow the procedure “With CONSULT-II” above.

PROCEDURE FOR MALFUNCTION B

With CONSULT-II

1. Turn ignition switch ON and wait at least 1 second.
2. Select “DATA MONITOR” mode with CONSULT-II.
3. Turn ignition switch OFF, wait at least 10 seconds, and then turn ON.
4. If 1st trip DTC is detected, go to EC-403, "Diagnostic Procedure" .

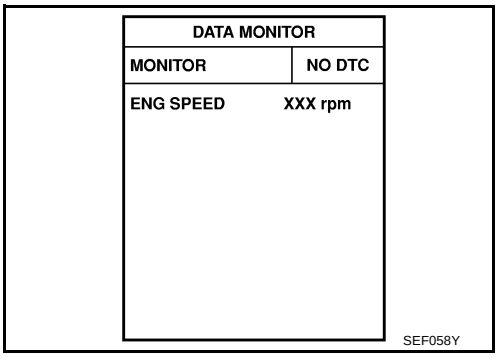

With GST

Follow the procedure “With CONSULT-II” above.

PROCEDURE FOR MALFUNCTION C

With CONSULT-II

1. Turn ignition switch ON and wait at least 1 second.
2. Select “DATA MONITOR” mode with CONSULT-II.
3. Turn ignition switch OFF, wait at least 10 seconds, and then turn ON.
4. Repeat step 3 for 32 times.
5. If 1st trip DTC is detected, go to EC-403, "Diagnostic Procedure" .

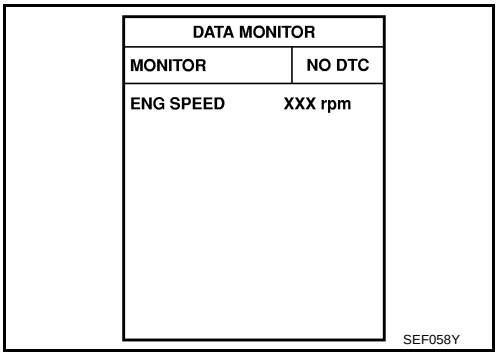

With GST

Follow the procedure “With CONSULT-II” above.

Diagnostic Procedure

ABS006SW

1. INSPECTION START

With CONSULT-II

1. Turn ignition switch ON.
2. Select “SELF DIAG RESULTS” mode with CONSULT-II.
3. Touch “ERASE”.
4. **Perform DTC Confirmation Procedure.**
   See EC-402 .
5. Is the 1st trip DTC P0605 displayed again?

With GST

1. Turn ignition switch ON.
2. Select Service $04 with GST.
3. **Perform DTC Confirmation Procedure.**
   See EC-402 .
4. Is the 1st trip DTC P0605 displayed again?

Yes or No

Yes >> GO TO 2.
No >> **INSPECTION END**

2. REPLACE ECM

1. Replace ECM.
2. Perform initialization of IVIS(NATS) system and registration of all IVIS(NATS) ignition key IDs. Refer to BL-215, "ECM Re-Communicating Function" .
3. Perform EC-96, "VIN Registration" .
4. Perform EC-96, "Accelerator Pedal Released Position Learning" .
5. Perform EC-96, "Throttle Valve Closed Position Learning" .
6. Perform EC-97, "Idle Air Volume Learning" .

>> **INSPECTION END**

DTC P1031, P1032, P1051, P1052 A/F SENSOR 1 HEATER

PFP:22693

Description

ABS00A9L

SYSTEM DESCRIPTION

Sensor	Input Signal to ECM	ECM function	Actuator
Camshaft position sensor (PHASE) Crankshaft position sensor (POS)	Engine speed	Air fuel ratio (A/F) sensor 1 heater control	Air fuel ratio (A/F) sensor 1 heater
Mass air flow sensor	Amount of intake air		

The ECM performs ON/OFF duty control of the air fuel ratio (A/F) sensor 1 heater corresponding to the engine operating condition to keep the temperature of air fuel ratio (A/F) sensor 1 element at the specified range.

CONSULT-II Reference Value in Data Monitor Mode

ABS00A9M

Specification data are reference values.

MONITOR ITEM	CONDITION	SPECIFICATION
A/F S1 HTR (B1) A/F S1 HTR (B2)	● Engine: After warming up, idle the engine	0 - 100%

On Board Diagnosis Logic

ABS00A9N

DTC No.	Trouble diagnosis name	DTC detecting condition	Possible cause
P1031 1031 (Bank 1) P1051 1051 (Bank 2)	Air fuel ratio (A/F) sensor 1 heater control circuit low	The current amperage in the heated air fuel ratio (A/F) sensor 1 heater circuit is out of the normal range. (An excessively low voltage signal is sent to ECM through the heated air fuel ratio (A/F) sensor 1 heater.)	● Harness or connectors (The air fuel ratio (A/F) sensor 1 heater circuit is open or shorted.) ● Air fuel ratio (A/F) sensor 1 heater
P1032 1032 (Bank 1) P1052 1052 (Bank 2)	Air fuel ratio (A/F) sensor 1 heater control circuit high	The current amperage in the heated air fuel ratio (A/F) sensor 1 heater circuit is out of the normal range. (An excessively high voltage signal is sent to ECM through the heated air fuel ratio (A/F) sensor 1 heater.)	● Harness or connectors (The air fuel ratio (A/F) sensor 1 heater circuit is shorted.) ● Air fuel ratio (A/F) sensor 1 heater

DTC Confirmation Procedure

ABS00A9O

NOTE:
If DTC Confirmation Procedure has been previously conducted, always turn ignition switch OFF and wait at least 10 seconds before conducting the next test.

TESTING CONDITION:
Before performing the following procedure, confirm that battery voltage is between 10.5V and 16V at idle.

With CONSULT-II

WITH CONSULT-II

1. Turn ignition switch ON and select “DATA MONITOR” mode with CONSULT-II.
2. Start engine and let it idle for at least 10 seconds.
3. If 1st trip DTC is detected, go to EC-410, "Diagnostic Procedure".

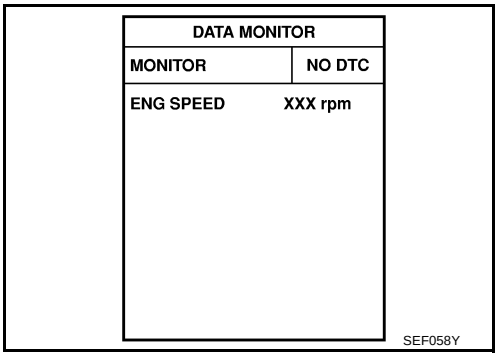

WITH GST

Follow the procedure “WITH CONSULT-II” above.

Wiring Diagram
BANK 1

ABS00A9P

EC-AF1HB1-01

: DETECTABLE LINE FOR DTC
: NON-DETECTABLE LINE FOR DTC

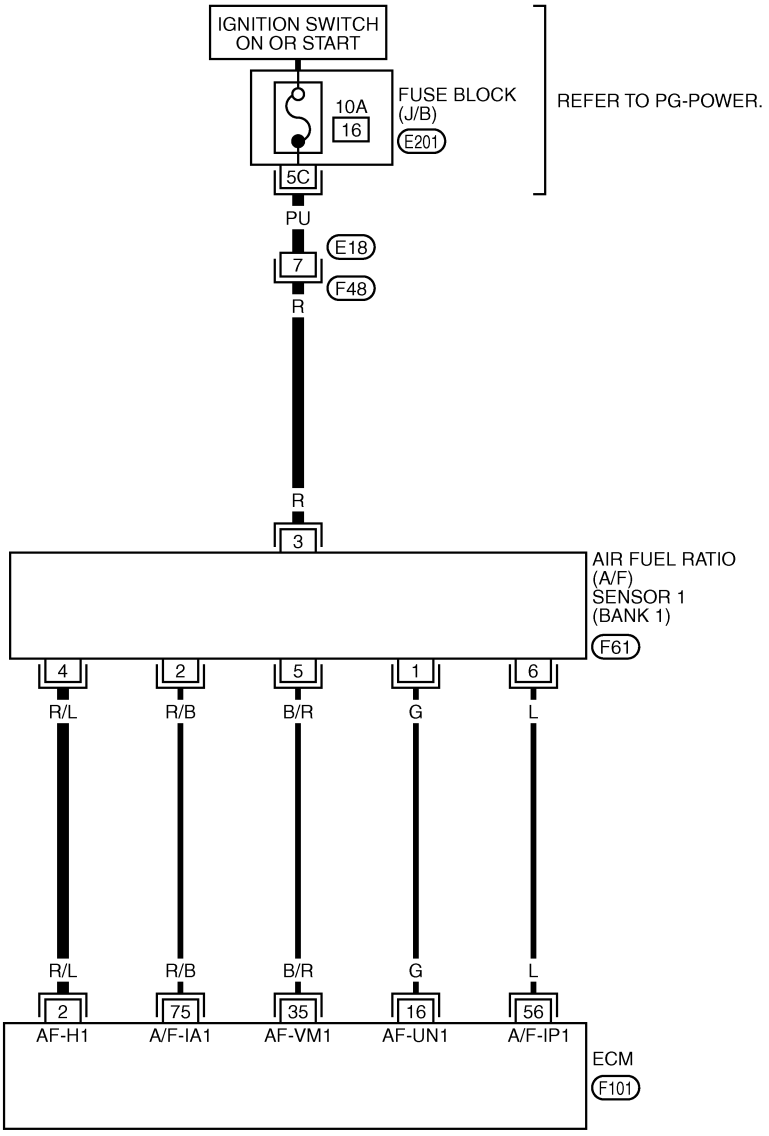

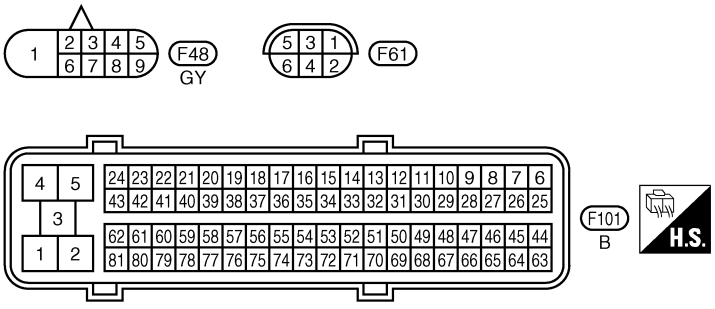

REFER TO THE FOLLOWING.
E201 -FUSE BLOCK-JUNCTION BOX (J/B)

TBWM0388E

Specification data are reference values and are measured between each terminal and ground.
Pulse signal is measured by CONSULT-II.

CAUTION:

Do not use ECM ground terminals when measuring input/output voltage. Doing so may result in damage to the ECM's transistor. Use a ground other than ECM terminals, such as the ground.

TERMINAL NO.	WIRE COLOR	ITEM	CONDITION	DATA (DC Voltage)
2	R/L	A/F sensor 1 heater (Bank 1)	**[Engine is running]** ● **Warm-up condition** ● Idle speed	Approximately 5V★ 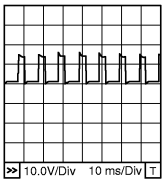 PBIB1584E

★: Average voltage for pulse signal (Actual pulse signal can be confirmed by oscilloscope.)

BANK 2

EC-AF1HB2-01

: DETECTABLE LINE FOR DTC
: NON-DETECTABLE LINE FOR DTC

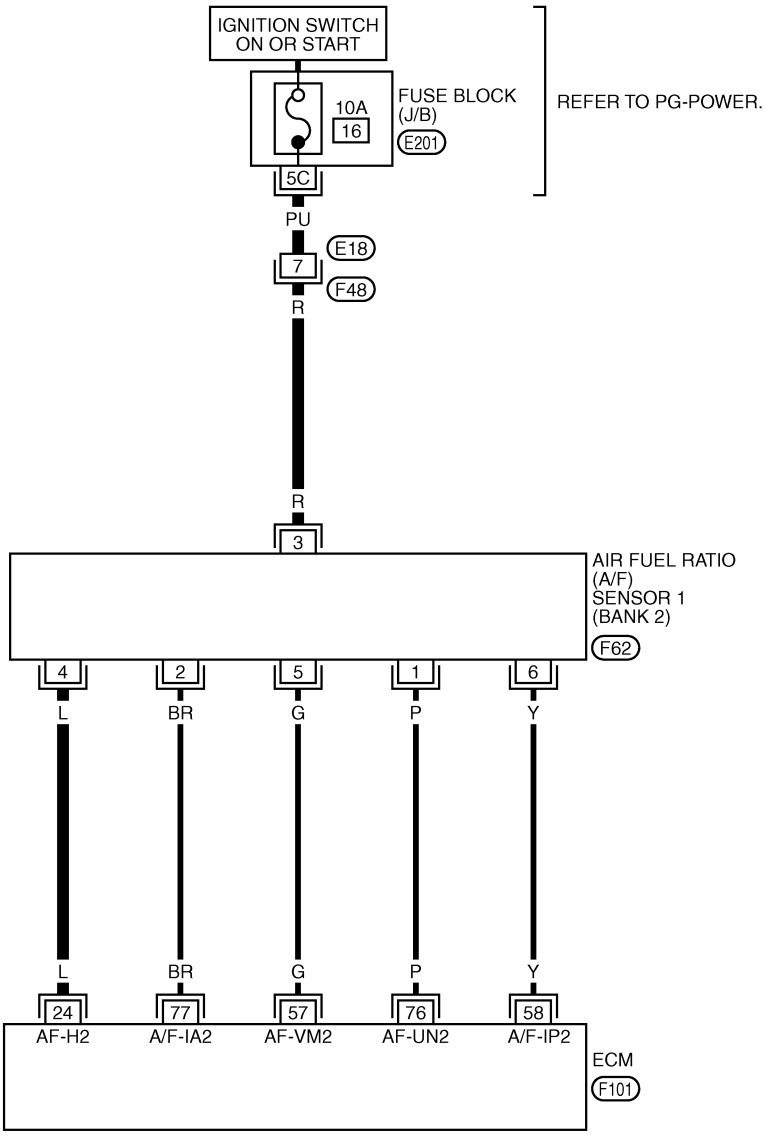

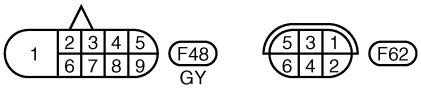

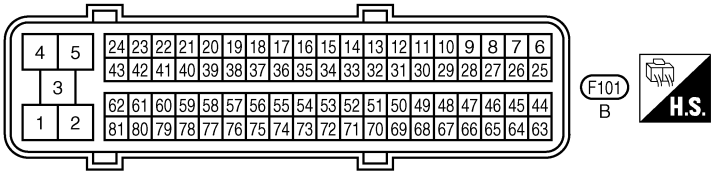

REFER TO THE FOLLOWING.
E201 -FUSE BLOCK-JUNCTION BOX (J/B)

TBWM0389E

Specification data are reference values and are measured between each terminal and ground.
Pulse signal is measured by CONSULT-II.

CAUTION:
Do not use ECM ground terminals when measuring input/output voltage. Doing so may result in damage to the ECM's transistor. Use a ground other than ECM terminals, such as the ground.

TERMINAL NO.	WIRE COLOR	ITEM	CONDITION	DATA (DC Voltage)
24	L	A/F sensor 1 heater (Bank 2)	**[Engine is running]** ● **Warm-up condition** ● Idle speed	Approximately 5V★ 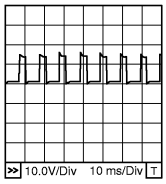 PBIB1584E

★: Average voltage for pulse signal (Actual pulse signal can be confirmed by oscilloscope.)

Diagnostic Procedure

ABS00A9Q

1. CHECK GROUND CONNECTIONS

1. Turn ignition switch OFF.
2. Loosen and retighten ground three screws on the body. Refer to EC-170, "Ground Inspection" .

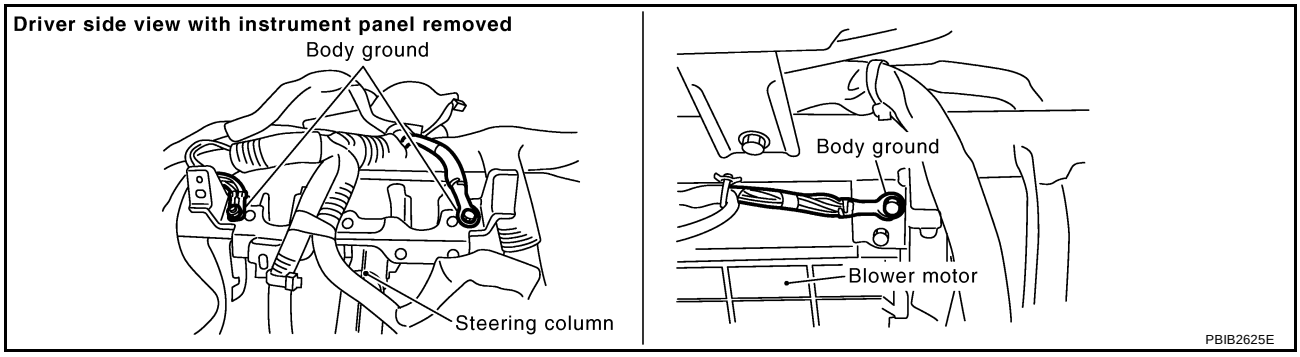

OK or NG

OK >> GO TO 2.
NG >> Repair or Replace ground connections.

2. CHECK AIR FUEL RATIO (A/F) SENSOR 1 POWER SUPPLY CIRCUIT

1. Disconnect air fuel ratio (A/F) sensor 1 harness connector.

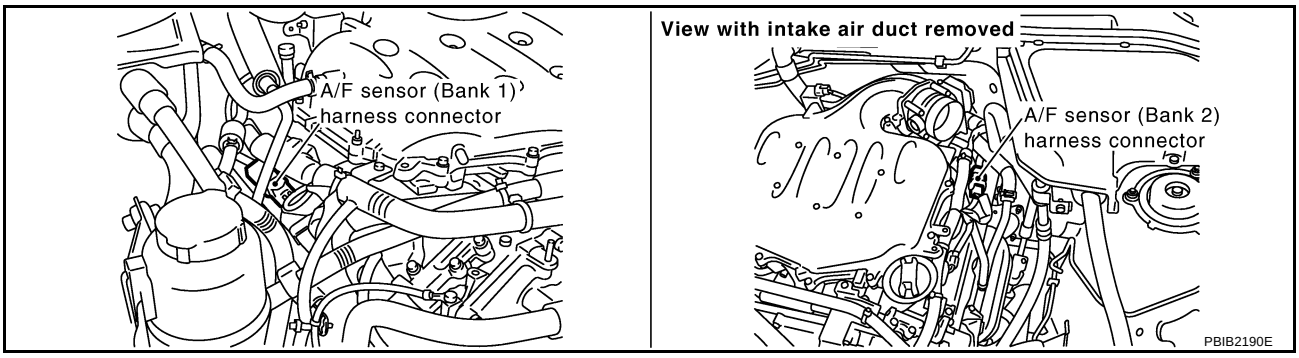

2. Turn ignition switch ON.
3. Check voltage between air fuel ratio sensor 1 terminal 3 and ground with CONSULT-II or tester.

Voltage: Battery voltage

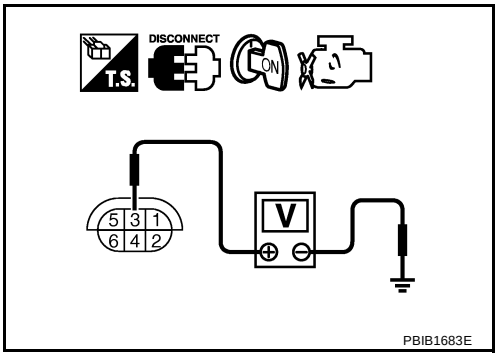

OK or NG

OK >> GO TO 4.
NG >> GO TO 3.

3. DETECT MALFUNCTIONING PART

Check the following.

- Harness connectors E18, F48
- Fuse block (J/B) connector E201
- 10A fuse
- Harness for open or short between air fuel ratio sensor 1 and fuse

>> Repair or replace harness or connectors.

4. CHECK AIR FUEL RATIO (A/F) SENSOR 1 HEATER OUTPUT SIGNAL CIRCUIT

1. Turn ignition switch OFF.
2. Disconnect ECM harness connector.
3. Check harness continuity between ECM terminal 2 (bank 1) or 24 (bank 2) and air fuel ratio (A/F) sensor 1 terminal 4.
   Refer to Wiring Diagram.

Continuity should exist.

4. Also check harness for short to ground or short to power.

OK or NG

OK >> GO TO 5.
NG >> Repair open circuit or short to ground or short to power in harness or connectors.

5. CHECK AIR FUEL RATIO (A/F) SENSOR 1 HEATER

Refer to EC-412, "Component Inspection" .

OK or NG

OK >> GO TO 6.
NG >> Replace air fuel ratio (A/F) sensor 1.

6. CHECK INTERMITTENT INCIDENT

Perform EC-163, "TROUBLE DIAGNOSIS FOR INTERMITTENT INCIDENT" .

OK or NG

OK >> Replace air fuel ratio (A/F) sensor 1.
NG >> Repair or replace.

Component Inspection

ABS00A9R

AIR FUEL RATIO (A/F) SENSOR 1 HEATER

Check resistance between terminals 3 and 4.

Resistance: 2.3 - 4.3Ω [at 25°C (77°F)]

Check continuity between terminals 3 and 1, 2, 5, 6, terminals 4 and 1, 2, 5, 6.

Continuity should not exist.

If NG, replace the air fuel ratio (A/F) sensor 1.

CAUTION:

- **Discard any air fuel ratio (A/F) sensor which has been dropped from a height of more than 0.5 m (19.7 in) onto a hard surface such as a concrete floor; use a new one.**
- **Before installing new air fuel ratio (A/F) sensor, clean exhaust system threads using Heated Oxygen Sensor Thread Cleaner tool J-43897-18 or J-43897-12 and approved anti-seize lubricant.**

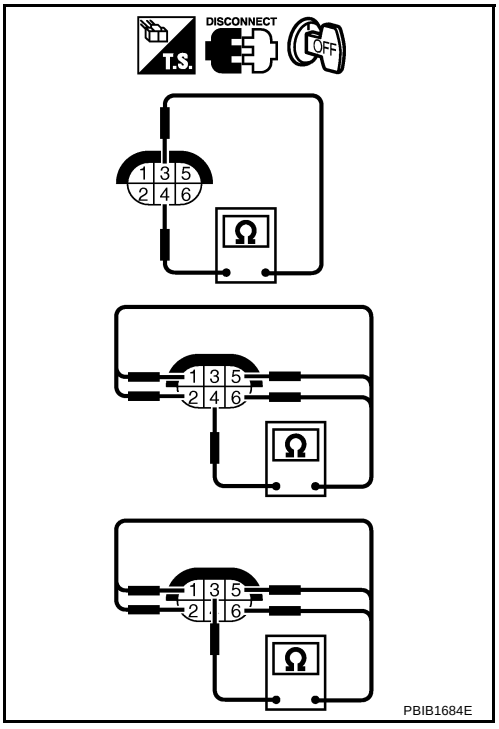

Removal and Installation

ABS00A9S

AIR FUEL RATIO (A/F) SENSOR 1

Refer to EM-26, "EXHAUST MANIFOLD AND THREE WAY CATALYST" .

DTC P1065 ECM POWER SUPPLY

PFP:23710

Component Description

ABS006SX

Battery voltage is supplied to the ECM even when the ignition switch is turned OFF for the ECM memory function of the DTC memory, the air-fuel ratio feedback compensation value memory, the idle air volume learning value memory, etc.

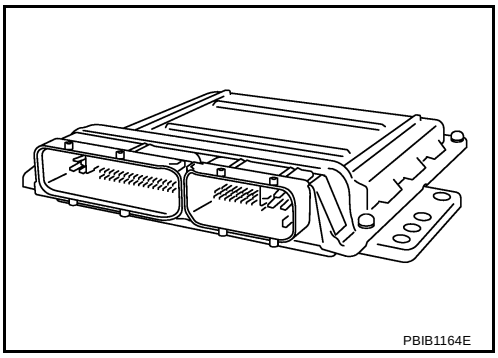

On Board Diagnosis Logic

ABS006SY

DTC No.	Trouble diagnosis name	DTC detecting condition	Possible cause
P1065 1065	ECM power supply circuit	ECM back-up RAM system does not function properly.	● Harness or connectors [ECM power supply (back-up) circuit is open or shorted.] ● ECM

DTC Confirmation Procedure

ABS006SZ

NOTE:
If DTC Confirmation Procedure has been previously conducted, always turn ignition switch OFF and wait at least 10 seconds before conducting the next test.

WITH CONSULT-II

1. Turn ignition switch ON and wait at least 1 second.
2. Select “DATA MONITOR” mode with CONSULT-II.
3. Start engine and let it idle for 1 second.
4. Turn ignition switch OFF, wait at least 10 seconds, and then turn ON.
5. Repeat steps 3 and 4 for 4 times.
6. If 1st trip DTC is detected, go to EC-415, "Diagnostic Procedure".

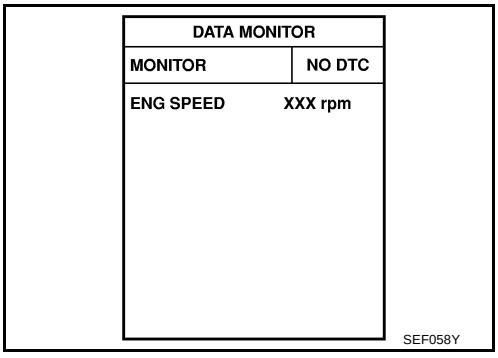

WITH GST

Follow the procedure “WITH CONSULT-II” above.

Wiring Diagram

ABS006T0

EC-ECM/PW-01

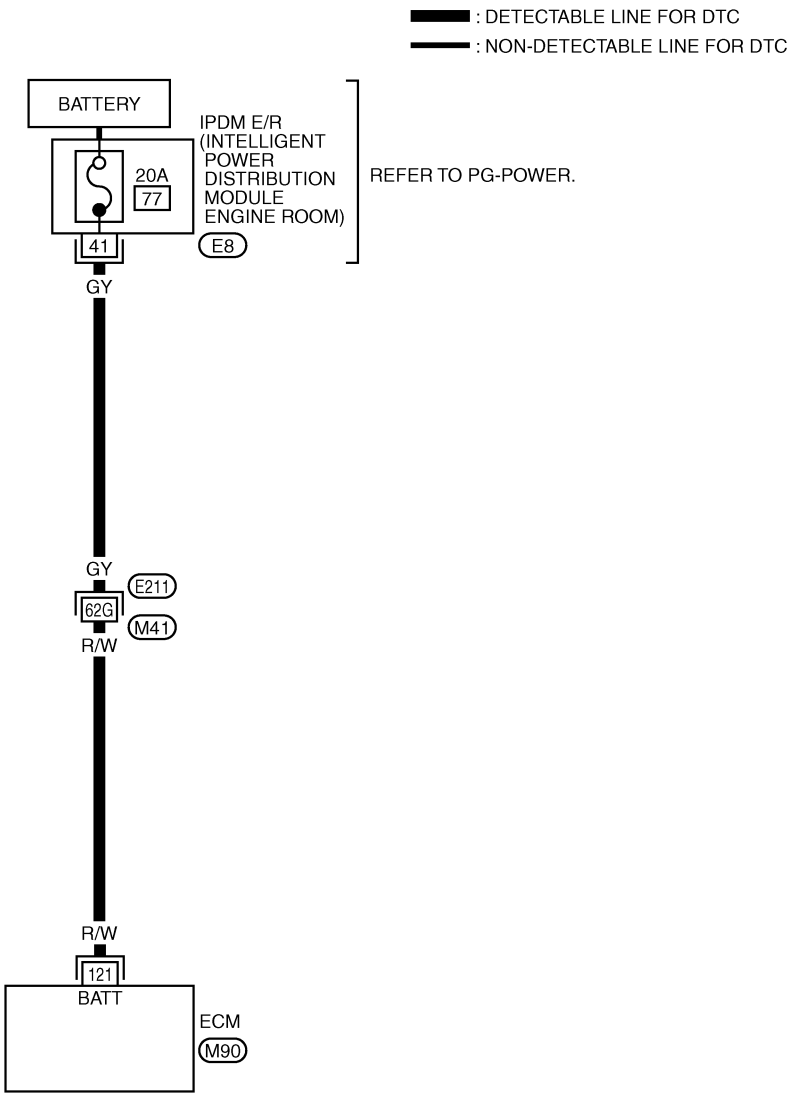

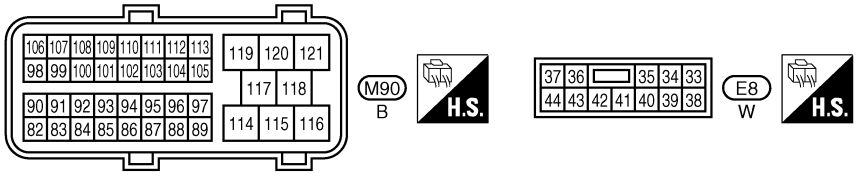

REFER TO THE FOLLOWING.
E211 -SUPER MULTIPLE JUNCTION (SMJ)

TBWM0250E

Specification data are reference values and are measured between each terminal and ground.

CAUTION:
Do not use ECM ground terminals when measuring input/output voltage. Doing so may result in damage to the ECM's transistor. Use a ground other than ECM terminals, such as the ground.

TERMINAL NO.	WIRE COLOR	ITEM	CONDITION	DATA (DC Voltage)
121	R/W	Power supply for ECM (Back-up)	**[Ignition switch OFF]**	BATTERY VOLTAGE (11 - 14V)

Diagnostic Procedure

ABS006T1

1. CHECK ECM POWER SUPPLY

1. Turn ignition switch OFF.
2. Disconnect ECM harness connector.
3. Check voltage between ECM terminal 121 and ground with CONSULT-II or tester.

Voltage: Battery voltage

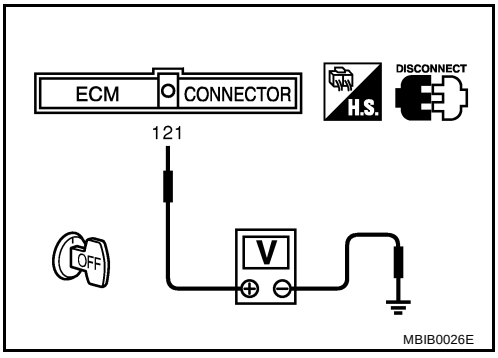

OK or NG

OK >> GO TO 3.
NG >> GO TO 2.

2. DETECT MALFUNCTIONING PART

Check the following.

- Harness connector E211, M41
- 20A fuse
- IPDM E/R harness connector E8
- Harness for open or short between ECM and IPDM E/R

>> Repair open circuit or short to ground or short to power in harness or connectors.

3. CHECK INTERMITTENT INCIDENT

Refer to EC-163, "TROUBLE DIAGNOSIS FOR INTERMITTENT INCIDENT" .

OK or NG

OK >> GO TO 4.
NG >> Repair or replace harness or connectors.

4. PERFORM DTC CONFIRMATION PROCEDURE

With CONSULT-II

1. Turn ignition switch ON.
2. Select “SELF DIAG RESULTS” mode with CONSULT-II.
3. Touch “ERASE”.
4. **Perform DTC Confirmation Procedure.**
   See EC-413 .
5. Is the 1st trip DTC P1065 displayed again?

With GST

1. Turn ignition switch ON.
2. Select Service $04 with GST.
3. **Perform DTC Confirmation Procedure.**
   See EC-413 .
4. Is the 1st trip DTC P1065 displayed again?

Yes or No

Yes >> GO TO 5.
No >> **INSPECTION END**

5. REPLACE ECM

1. Replace ECM.
2. Perform initialization of IVIS(NATS) system and registration of all IVIS(NATS) ignition key IDs. Refer to BL-215, "ECM Re-Communicating Function" .
3. Perform EC-96, "VIN Registration" .
4. Perform EC-96, "Accelerator Pedal Released Position Learning" .
5. Perform EC-96, "Throttle Valve Closed Position Learning" .
6. Perform EC-97, "Idle Air Volume Learning" .

>> **INSPECTION END**

DTC P1111, P1136 IVT CONTROL SOLENOID VALVE

PFP:23796

Component Description

ABS006T2

Intake valve timing control solenoid valve is activated by ON/OFF pulse duty (ratio) signals from the ECM.
The intake valve timing control solenoid valve changes the oil amount and direction of flow through intake valve timing control unit or stops oil flow.
The longer pulse width advances valve angle.
The shorter pulse width retards valve angle.
When ON and OFF pulse widths become equal, the solenoid valve stops oil pressure flow to fix the intake valve angle at the control position.

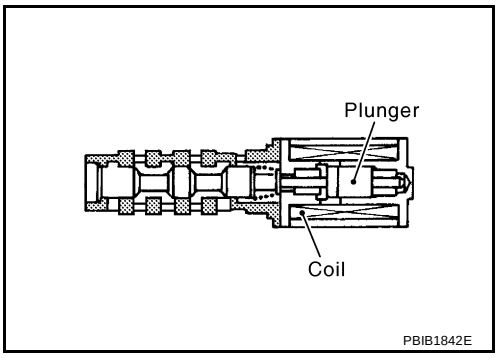

CONSULT-II Reference Value in Data Monitor Mode

ABS006T3

Specification data are reference values.

MONITOR ITEM	CONDITION		SPECIFICATION
INT/V SOL (B1) INT/V SOL (B2)	● Engine: After warming up ● Selector lever: P or N ● Air conditioner switch: OFF ● No-load	Idle	0% - 2%
		When revving engine up to 2,000 rpm quickly	Approx. 0% - 50%

On Board Diagnosis Logic

ABS006T4

DTC No.	Trouble diagnosis name	DTC detecting condition	Possible cause
P1111 1111 (Bank 1)	Intake valve timing control solenoid valve circuit	An improper voltage is sent to the ECM through intake valve timing control solenoid valve.	● Harness or connectors (Intake valve timing control solenoid valve circuit is open or shorted.) ● Intake valve timing control solenoid valve
P1136 1136 (Bank 2)			

DTC Confirmation Procedure

ABS006T5

NOTE:
If DTC Confirmation Procedure has been previously conducted, always turn ignition switch OFF and wait at least 10 seconds before conducting the next test.

WITH CONSULT-II

1. Turn ignition switch ON.
2. Select “DATA MONITOR” mode with CONSULT-II.
3. Start engine and let it idle for 5 seconds.
4. If 1st trip DTC is detected, go to EC-421, "Diagnostic Procedure"
.

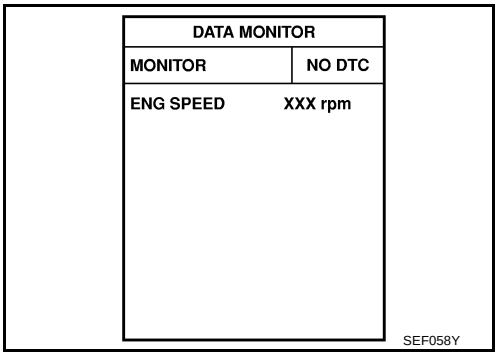

WITH GST

Following the procedure “WITH CONSULT-II” above.

Wiring Diagram
BANK 1

ABS006T6

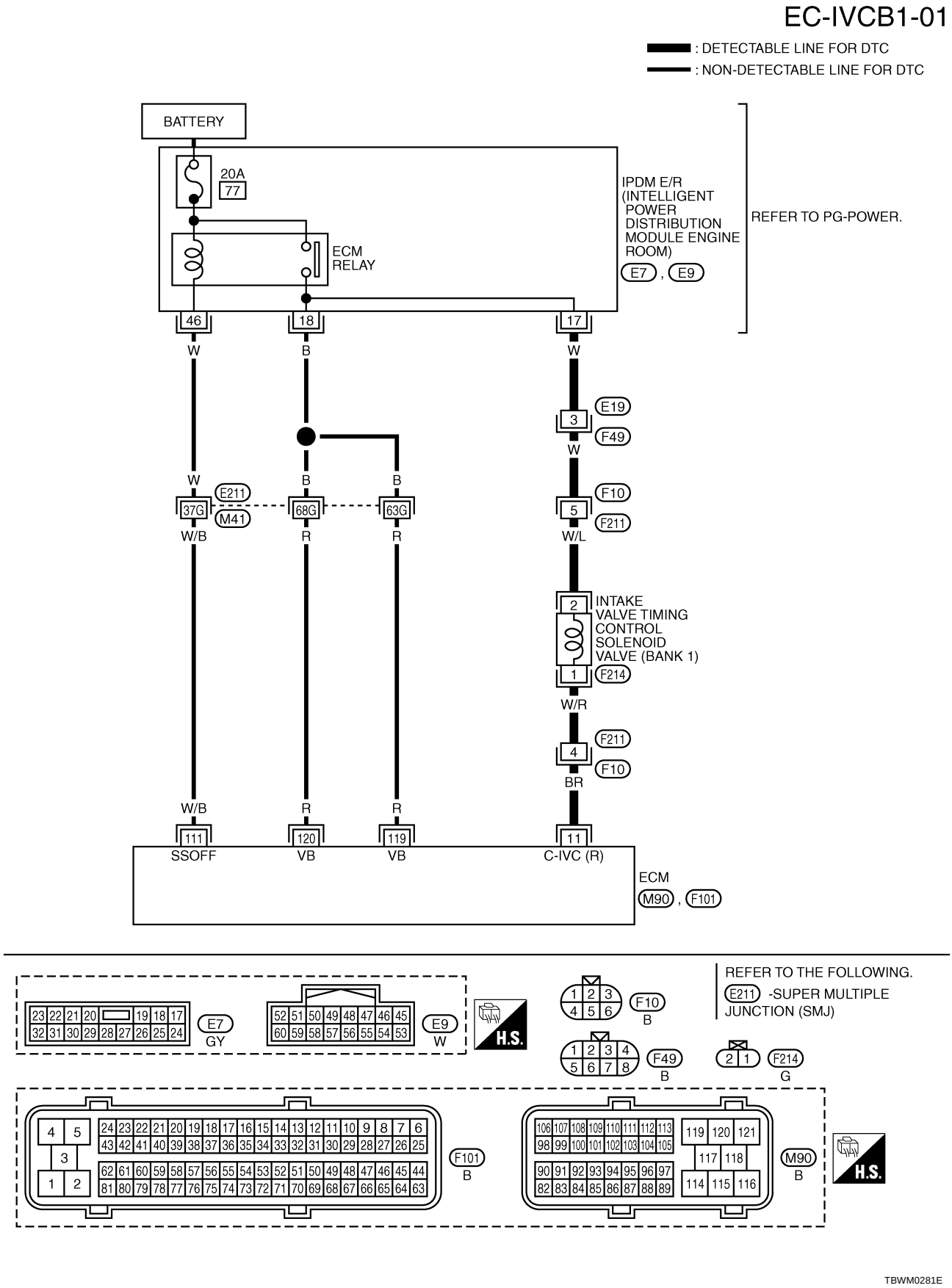

Specification data are reference values and are measured between each terminal and ground.
Pulse signal is measured by CONSULT-II.

CAUTION:
Do not use ECM ground terminals when measuring input/output voltage. Doing so may result in damage to the ECM's transistor. Use a ground other than ECM terminals, such as the ground.

TERMINAL NO.	WIRE COLOR	ITEM	CONDITION	DATA (DC Voltage)
11	BR	Intake valve timing control solenoid valve (bank 1)	**[Engine is running]** ● **Warm-up condition** ● Idle speed	BATTERY VOLTAGE (11 - 14V)
			[Engine is running] ● **Warm-up condition** ● When revving engine up to 2,500 rpm quickly	7 - 12V★ 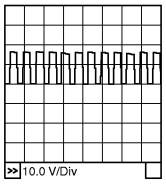 PBIB1790E

★: Average voltage for pulse signal (Actual pulse signal can be confirmed by oscilloscope.)

BANK 2

EC-IVCB2-01

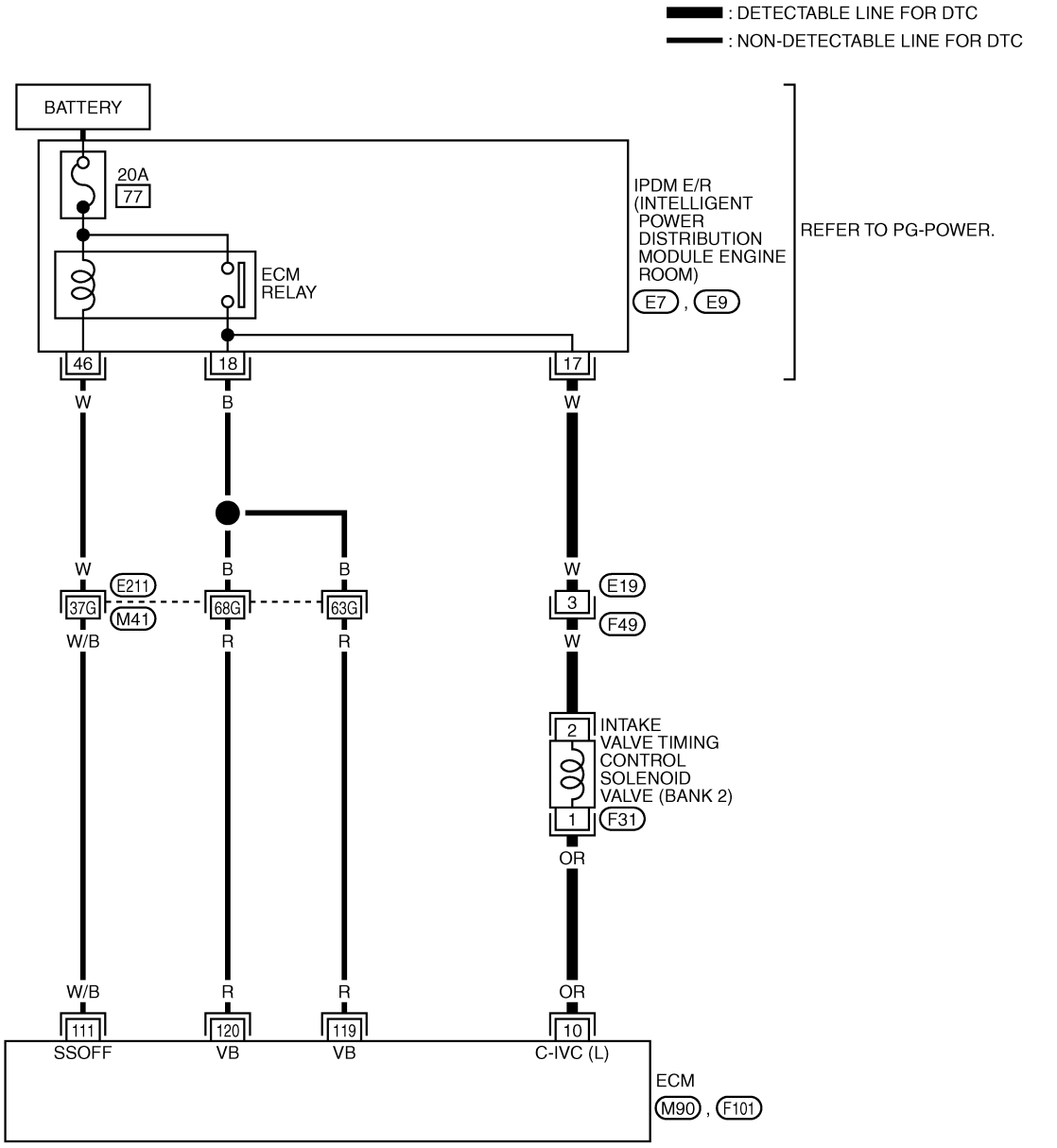

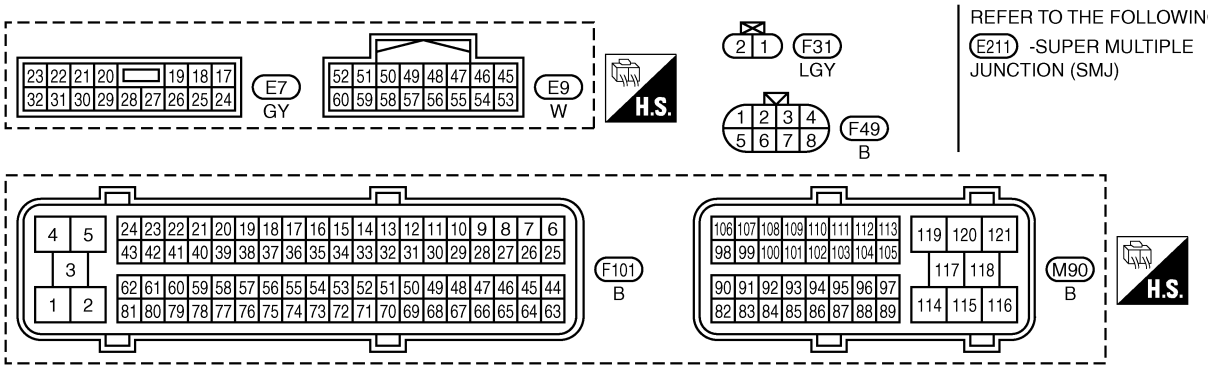

TBWM0282E

Specification data are reference values and are measured between each terminal and ground.
Pulse signal is measured by CONSULT-II.

CAUTION:
Do not use ECM ground terminals when measuring input/output voltage. Doing so may result in damage to the ECM's transistor. Use a ground other than ECM terminals, such as the ground.

TERMINAL NO.	WIRE COLOR	ITEM	CONDITION	DATA (DC Voltage)
10	OR	Intake valve timing control solenoid valve (bank 2)	**[Engine is running]** ● **Warm-up condition** ● Idle speed	BATTERY VOLTAGE (11 - 14V)
			[Engine is running] ● **Warm-up condition** ● When revving engine up to 2,500 rpm quickly	7 - 12V★ 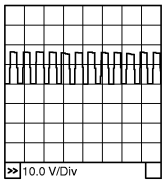 PBIB1790E

★: Average voltage for pulse signal (Actual pulse signal can be confirmed by oscilloscope.)

Diagnostic Procedure

ABS006T7

1. CHECK INTAKE VALVE TIMING CONTROL SOLENOID VALVE POWER SUPPLY CIRCUIT

1. Turn ignition switch OFF.
2. Disconnect intake valve timing control solenoid valve harness connector.

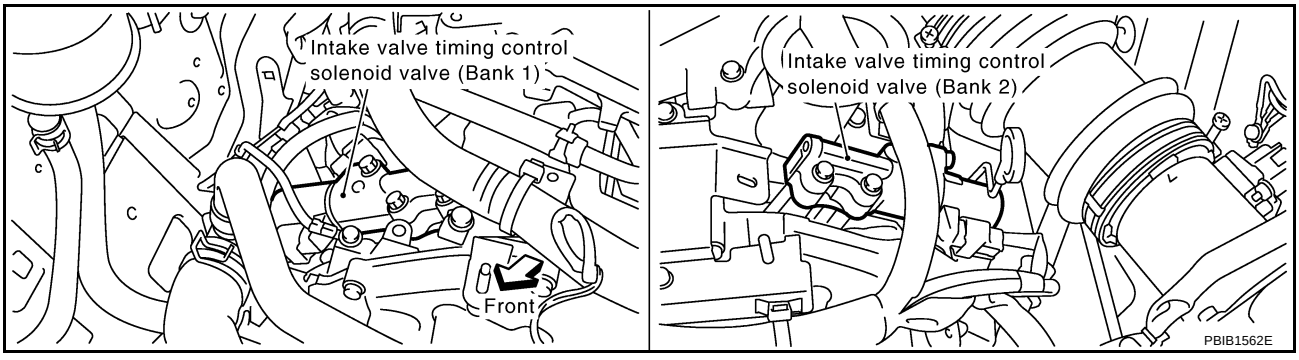

3. Turn ignition switch ON.
4. Check voltage between intake valve timing control solenoid valve terminal 2 and ground with CONSULT-II or tester.

Voltage: Battery voltage

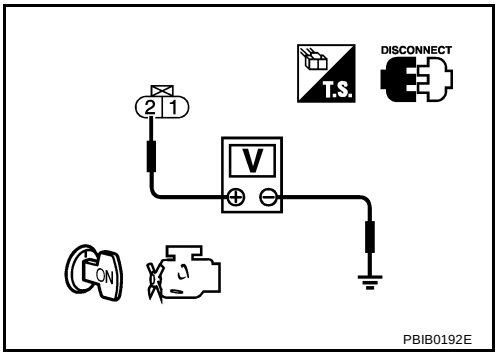

OK or NG

OK >> GO TO 3.
NG >> GO TO 2.

2. DETECT MALFUNCTIONING PART

Check the following.

- Harness connectors E19, F49
- Harness connectors F10, F211 (Bank 1)
- IPDM E/R harness connector E7
- Harness for open or short between intake valve timing control solenoid valve and IPDM E/R

>> Repair open circuit or short to ground or short to power in harness or connectors.

3. CHECK INTAKE VALVE TIMING CONTROL SOLENOID VALVE OUTPUT SIGNAL CIRCUIT FOR OPEN AND SHORT

1. Turn ignition switch OFF.
2. Disconnect ECM harness connector.
3. Check harness continuity between ECM terminal 11 (bank 1) or 10 (bank 2) and intake valve timing control solenoid valve terminal 1. Refer to Wiring Diagram.

Continuity should exist.

4. Also check harness for short to ground and short to power.

OK or NG

OK >> GO TO 5.
NG >> GO TO 4.

4. DETECT MALFUNCTIONING PART

Check the following.

- Harness connectors F211, F10 (Bank 1)
- Harness for open and short between ECM and intake valve timing control solenoid valve

>> Repair open circuit or short to ground or short to power in harness or connectors.

5. CHECK INTAKE VALVE TIMING CONTROL SOLENOID VALVE

Refer to EC-177, "Component Inspection" .

OK or NG

OK >> GO TO 6.
NG >> Replace intake valve timing control solenoid valve.

6. CHECK INTERMITTENT INCIDENT

Refer to EC-163, "TROUBLE DIAGNOSIS FOR INTERMITTENT INCIDENT" .
For wiring diagram, refer to EC-302 for CKP sensor (POS), EC-309 and EC-311 for CMP sensor (PHASE).

>> **INSPECTION END**

Component Inspection

ABS00E95

INTAKE VALVE TIMING CONTROL SOLENOID VALVE

1. Disconnect intake valve timing control solenoid valve harness connector.

2. Check resistance between intake valve timing control solenoid valve as follows.

Terminal	Resistance
1 and 2	7.0 - 7.5Ω [at 20°C (68°F)]
1 or 2 and ground	∞Ω (Continuity should not exist.)

If NG, replace intake valve timing control solenoid valve.
If OK, go to next step.

3. Remove intake valve timing control solenoid valve.

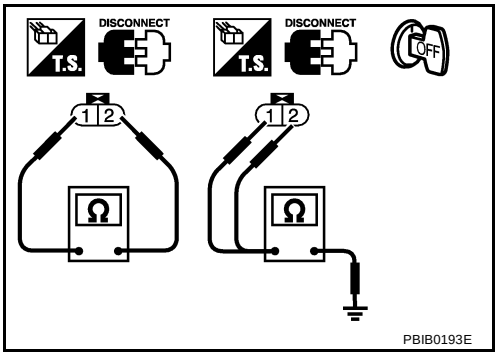

4. Provide 12V DC between intake valve timing control solenoid valve terminals and then interrupt it. Make sure that the plunger moves as shown in the figure.

CAUTION:
Do not apply 12V DC continuously for 5 seconds or more. Doing so may result in damage to the coil in intake valve timing control solenoid valve.
If NG, replace intake valve timing control solenoid valve.

NOTE:
Always replace O-ring when intake valve timing control solenoid valve is removed.

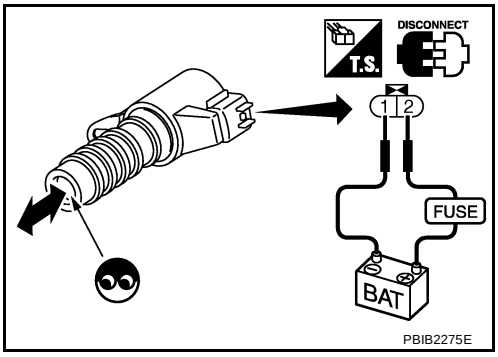

Removal and Installation

ABS006T9

INTAKE VALVE TIMING CONTROL SOLENOID VALVE

Refer to EM-64, "TIMING CHAIN" .

DTC P1121 ELECTRIC THROTTLE CONTROL ACTUATOR

PFP:16119

Component Description

ABS006TA

Electric throttle control actuator consists of throttle control motor, throttle position sensor, etc.
The throttle control motor is operated by the ECM and it opens and closes the throttle valve.
The throttle position sensor detects the throttle valve position, and the opening and closing speed of the throttle valve and feeds the voltage signals to the ECM. The ECM judges the current opening angle of the throttle valve from these signals and the ECM controls the throttle control motor to make the throttle valve opening angle properly in response to driving condition.

On Board Diagnosis Logic

ABS006TB

This self-diagnosis has the one trip detection logic.

DTC No.	Trouble diagnosis name	DTC detecting condition		Possible cause
P1121 1121	Electric throttle control actuator	A)	Electric throttle control actuator does not function properly due to the return spring malfunction.	● Electric throttle control actuator
		B)	Throttle valve opening angle in fail-safe mode is not in specified range.	
		C)	ECM detect the throttle valve is stuck open.	

FAIL-SAFE MODE

When the malfunction is detected, the ECM enters fail-safe mode and the MIL lights up.

Detected items	Engine operating condition in fail-safe mode
Malfunction A	The ECM controls the electric throttle actuator by regulating the throttle opening around the idle position. The engine speed will not rise more than 2,000 rpm.
Malfunction B	ECM controls the electric throttle control actuator by regulating the throttle opening to 20 degrees or less.
Malfunction C	While the vehicle is driving, it slows down gradually by fuel cut. After the vehicle stops, the engine stalls. The engine can restart in N or P position, and engine speed will not exceed 1,000 rpm or more.

DTC Confirmation Procedure

ABS006TC

NOTE:

- **Perform PROCEDURE FOR MALFUNCTION A AND B first. If the DTC cannot be confirmed, perform PROCEDURE FOR MALFUNCTION C.**
- If DTC Confirmation Procedure has been previously conducted, always turn ignition switch OFF and wait at least 10 seconds before conducting the next test.

PROCEDURE FOR MALFUNCTION A AND B

With CONSULT-II

1. Turn ignition switch ON and wait at least 1 second.
2. Select “DATA MONITOR” mode with CONSULT-II.
3. Shift selector lever to D position and wait at least 3 seconds.
4. Shift selector lever to P position.
5. Turn ignition switch OFF, wait at least 10 seconds.
6. Turn ignition switch ON and wait at least 1 second.
7. Shift selector lever to D position, and wait at least 3 seconds.
8. Shift selector lever to P position.
9. Turn ignition switch OFF, wait at least 10 seconds, and then turn ON.
10. If DTC is detected, go to EC-425, "Diagnostic Procedure" .

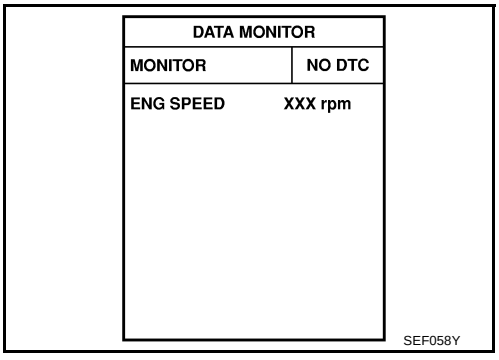

With GST

Follow the procedure “With CONSULT-II” above.

PROCEDURE FOR MALFUNCTION C

With CONSULT-II

1. Turn ignition switch ON and wait at least 1 second.
2. Select “DATA MONITOR” mode with CONSULT-II.
3. Shift selector lever to D position and wait at least 3 seconds.
4. Shift selector lever to P or N position.
5. Start engine and let it idle for 3 seconds.
6. If DTC is detected, go to EC-425, "Diagnostic Procedure" .

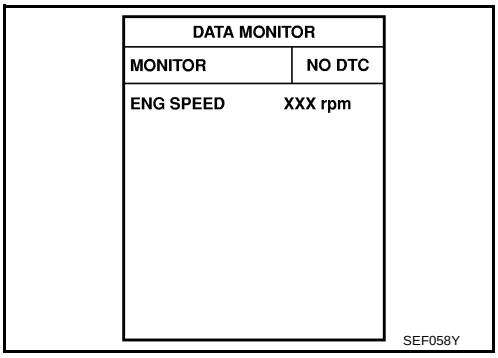

With GST

Follow the procedure “With CONSULT-II” above.

Diagnostic Procedure

ABS006TD

1. CHECK ELECTRIC THROTTLE CONTROL ACTUATOR VISUALLY

1. Remove the intake air duct.
2. Check if a foreign matter is caught between the throttle valve and the housing.

OK or NG

OK >> GO TO 2.
NG >> Remove the foreign matter and clean the electric throttle control actuator inside.

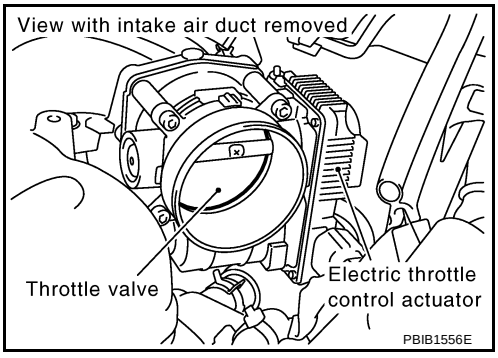

2. REPLACE ELECTRIC THROTTLE CONTROL ACTUATOR

1. Replace the electric throttle control actuator.
2. Perform EC-96, "Throttle Valve Closed Position Learning" .
3. Perform EC-97, "Idle Air Volume Learning" .

>> **INSPECTION END**

DTC P1122 ELECTRIC THROTTLE CONTROL FUNCTION

PFP:16119

Description

ABS006TE

NOTE:
If DTC P1122 is displayed with DTC P1121 or 1126, first perform the trouble diagnosis for DTC P1121 or P1126. Refer to EC-424 or EC-432 .
Electric throttle control actuator consists of throttle control motor, throttle position sensor, etc.
The throttle control motor is operated by the ECM and it opens and closes the throttle valve.
The current opening angle of the throttle valve is detected by the throttle position sensor and it provides feedback to the ECM to control the throttle control motor to make the throttle valve opening angle properly in response to driving condition.

On Board Diagnosis Logic

ABS006TF

This self-diagnosis has the one trip detection logic.

DTC No.	Trouble diagnosis name	DTC detecting condition	Possible cause
P1122 1122	Electric throttle control performance problem	Electric throttle control function does not operate properly.	● Harness or connectors (Throttle control motor circuit is open or shorted) ● Electric throttle control actuator

FAIL-SAFE MODE

When the malfunction is detected, ECM enters fail-safe mode and the MIL lights up.

Engine operating condition in fail-safe mode
ECM stops the electric throttle control actuator control, throttle valve is maintained at a fixed opening (approx. 5 degrees) by the return spring.

DTC Confirmation Procedure

ABS006TG

NOTE:
If DTC Confirmation Procedure has been previously conducted, always turn ignition switch OFF and wait at least 10 seconds before conducting the next test.
TESTING CONDITION:
Before performing the following procedure, confirm that battery voltage is more than 11V when the engine is running.

WITH CONSULT-II

1. Turn ignition switch ON and wait at least 2 seconds.
2. Select “DATA MONITOR” mode with CONSULT-II.
3. Start engine and let it idle for 5 seconds.
4. If DTC is detected, go to EC-428, "Diagnostic Procedure" .

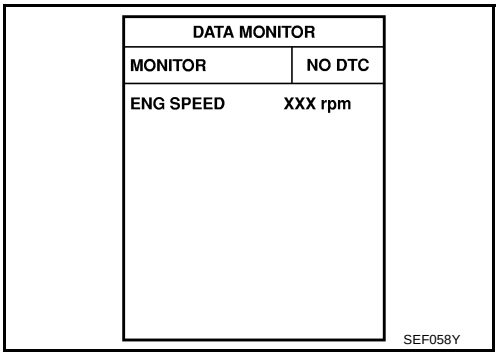

WITH GST

Follow the procedure “WITH CONSULT-II” above.

Wiring Diagram

ABS006TH

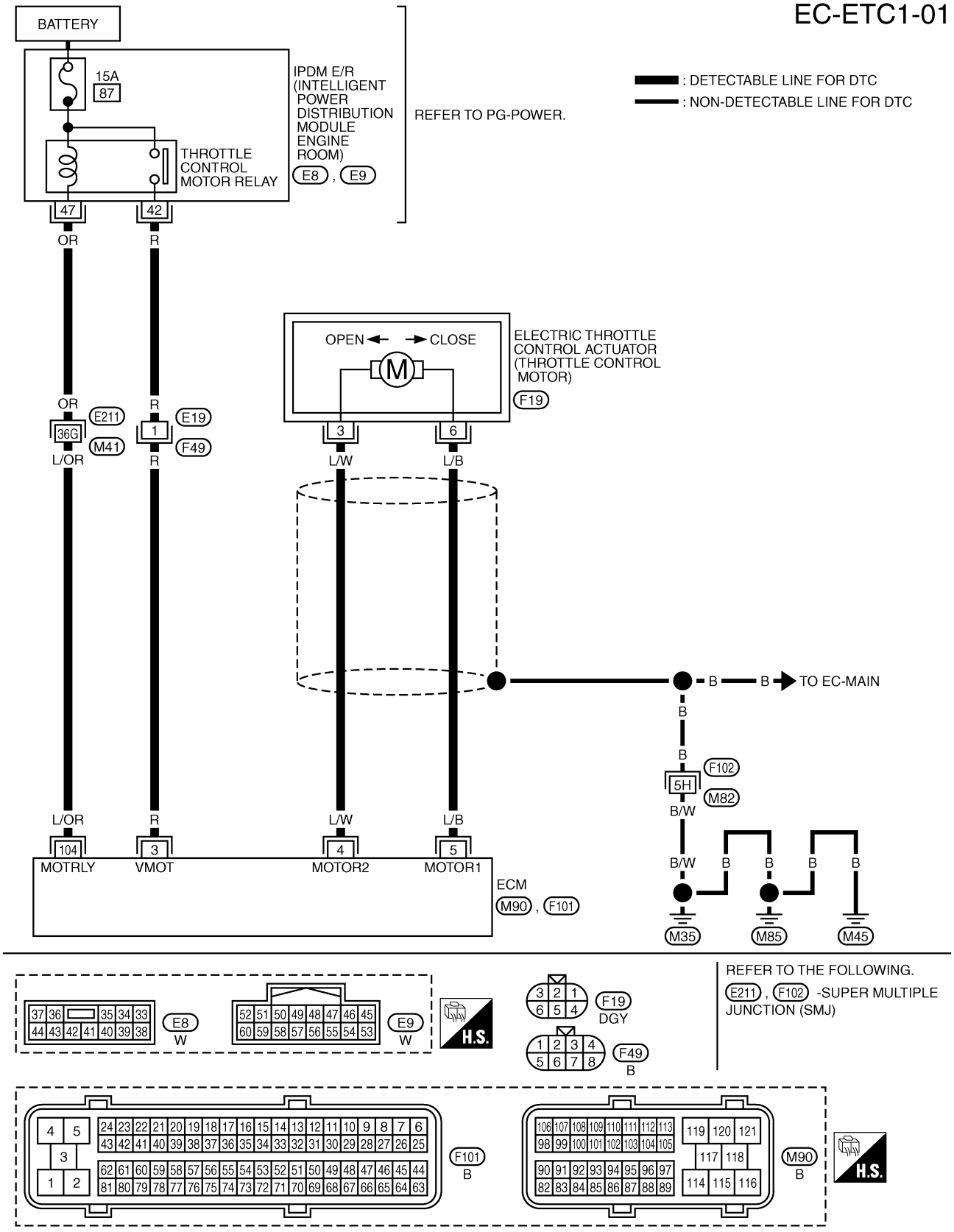

Specification data are reference values and are measured between each terminal and ground.
Pulse signal is measured by CONSULT-II.

CAUTION:
Do not use ECM ground terminals when measuring input/output voltage. Doing so may result in damage to the ECM's transistor. Use a ground other than ECM terminals, such as the ground.

TERMINAL NO.	WIRE COLOR	ITEM	CONDITION	DATA (DC Voltage)
3	R	Throttle control motor relay power supply	**[Ignition switch: ON]**	BATTERY VOLTAGE (11 - 14V)
4	L/W	Throttle control motor (Close)	**[Ignition switch: ON]** ● Engine stopped ● Selector lever: D ● Accelerator pedal: Fully released	0 - 14V★ 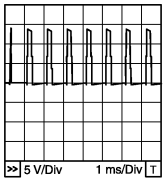 PBIB1104E
5	L/B	Throttle control motor (Open)	**[Ignition switch: ON]** ● Engine stopped ● Selector lever: D ● Accelerator pedal: Fully depressed	0 - 14V★ 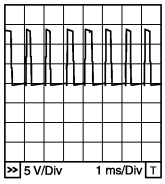 PBIB1105E
104	L/OR	Throttle control motor relay	**[Ignition switch: OFF]**	BATTERY VOLTAGE (11 - 14V)
			[Ignition switch: ON]	0 - 1.0V

Diagnostic Procedure

ABS006TI

1. CHECK GROUND CONNECTIONS

1. Turn ignition switch OFF
2. Loosen and retighten ground three screws on the body. Refer to EC-170, "Ground Inspection" .

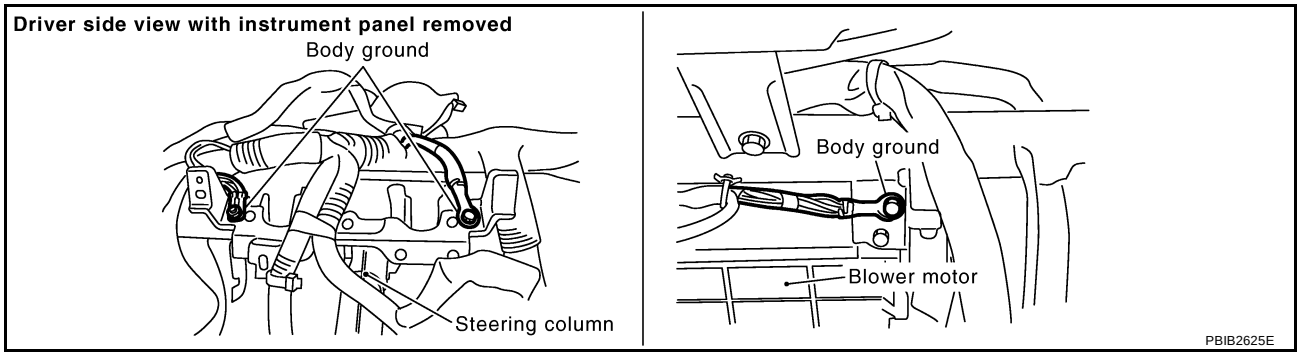

OK or NG

OK >> GO TO 2.
NG >> Repair or replace ground connections.

2. CHECK THROTTLE CONTROL MOTOR RELAY INPUT SIGNAL CIRCUIT-I

1. Check voltage between ECM terminal 3 and ground under the following conditions with CONSULT-II or tester.

Ignition switch	Voltage
OFF	Approximately 0V
ON	Battery voltage (11 - 14V)

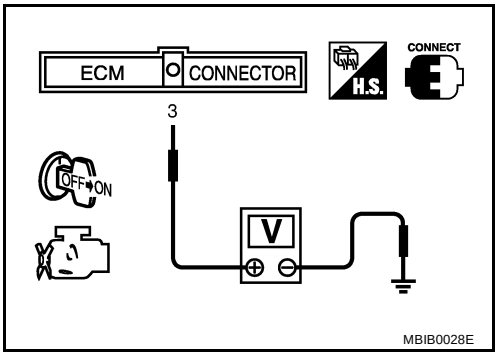

OK or NG

OK >> GO TO 10.
NG >> GO TO 3.

3. CHECK THROTTLE CONTROL MOTOR RELAY INPUT SIGNAL CIRCUIT-II

1. Turn ignition switch OFF.
2. Disconnect ECM harness connector.
3. Disconnect IPDM E/R harness connector E8.
4. Check continuity between ECM terminal 3 and IPDM E/R terminal 42. Refer to Wiring Diagram.

Continuity should exist.

5. Also check harness for short to ground and short to power.

OK or NG

OK >> GO TO 5.
NG >> GO TO 4.

4. DETECT MALFUNCTIONING PART

Check the following.

- Harness connectors E19, F49
- Harness for open or short between ECM and IPDM E/R

>> Repair open circuit or short to ground or short to power in harness or connectors.

5. CHECK THROTTLE CONTROL MOTOR RELAY POWER SUPPLY CIRCUIT-I

1. Reconnect all harness connectors disconnected.
2. Turn ignition switch OFF.
3. Check voltage between ECM terminal 104 and ground with CONSULT-II or tester.

Voltage: Battery voltage

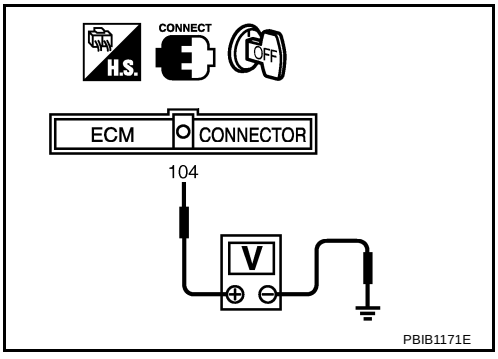

OK or NG

OK >> GO TO 9.
NG >> GO TO 6.

6. CHECK THROTTLE CONTROL MOTOR RELAY POWER SUPPLY CIRCUIT-II

1. Disconnect ECM harness connector.
2. Disconnect IPDM E/R harness connector E9.
3. Check continuity between ECM terminal 104 and IPDM E/R terminal 47.
   Refer to Wiring Diagram.

   Continuity should exist.

4. Also check harness for short to ground and short to power.

OK or NG

OK >> GO TO 8.
NG >> GO TO 7.

7. DETECT MALFUNCTIONING PART

Check the following.

- Harness connectors E211, M41
- Harness for open or short between ECM and IPDM E/R

>> Repair open circuit or short to ground or short to power in harness or connectors.

8. CHECK FUSE

1. Disconnect 15A fuse.
2. Check 15A fuse for blown.

OK or NG

OK >> GO TO 9.
NG >> Replace 15A fuse.

9. CHECK INTERMITTENT INCIDENT

Refer to EC-163, "TROUBLE DIAGNOSIS FOR INTERMITTENT INCIDENT" .

OK or NG

OK >> Replace IPDM E/R. Refer to PG-18, "IPDM E/R (INTELLIGENT POWER DISTRIBUTION MODULE ENGINE ROOM)" .
NG >> Repair or replace harness or connectors.

10. CHECK THROTTLE CONTROL MOTOR OUTPUT SIGNAL CIRCUIT FOR OPEN OR SHORT

1. Turn ignition switch OFF.
2. Disconnect electric throttle control actuator harness connector.
3. Disconnect ECM harness connector.
4. Check harness continuity between the following terminals.
   Refer to Wiring Diagram.

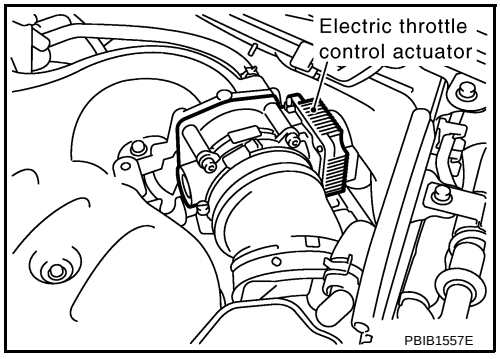

Electric throttle control actuator terminal	ECM terminal	Continuity
3	5	Should not exist
	4	Should exist
6	5	Should exist
	4	Should not exist

5. Also check harness for short to ground and short to power.

OK or NG

OK >> GO TO 11.
NG >> Repair or replace.

11. CHECK ELECTRIC THROTTLE CONTROL ACTUATOR VISUALLY

1. Remove the intake air duct.
2. Check if foreign matter is caught between the throttle valve and the housing.

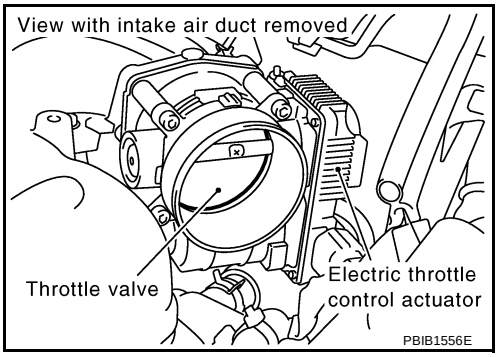

OK or NG

OK >> GO TO 12.
NG >> Remove the foreign matter and clean the electric throttle control actuator inside.

12. CHECK THROTTLE CONTROL MOTOR

Refer to EC-431, "Component Inspection" .

OK or NG

OK >> GO TO 13.
NG >> GO TO 14.

13. CHECK INTERMITTENT INCIDENT

Refer to EC-163, "TROUBLE DIAGNOSIS FOR INTERMITTENT INCIDENT" .

OK or NG

OK >> GO TO 14.
NG >> Repair or replace harness or connectors.

14. REPLACE ELECTRIC THROTTLE CONTROL ACTUATOR

1. Replace the electric throttle control actuator.
2. Perform EC-96, "Throttle Valve Closed Position Learning" .
3. Perform EC-97, "Idle Air Volume Learning" .

>> **INSPECTION END**

Component Inspection

ABS006TJ

THROTTLE CONTROL MOTOR

1. Disconnect electric throttle control actuator harness connector.
2. Check resistance between terminals 3 and 6.

Resistance: Approximately 1 - 15 Ω [at 25 °C (77°F)]

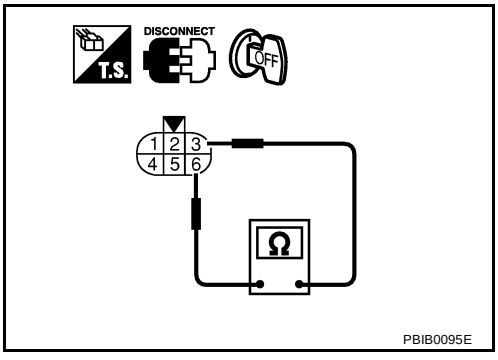

3. If NG, replace electric throttle control actuator and go to next step.
4. Perform EC-96, "Throttle Valve Closed Position Learning" .
5. Perform EC-97, "Idle Air Volume Learning" .

Remove and Installation

ABS006TK

ELECTRIC THROTTLE CONTROL ACTUATOR

Refer to EM-19, "INTAKE MANIFOLD COLLECTOR" .

DTC P1124, P1126 THROTTLE CONTROL MOTOR RELAY

PFP:16119

Component Description

ABS006TL

Power supply for the throttle control motor is provided to the ECM via throttle control motor relay. The throttle control motor relay is ON/OFF controlled by the ECM. When the ignition switch is turned ON, the ECM sends an ON signal to throttle control motor relay and battery voltage is provided to the ECM. When the ignition switch is turned OFF, the ECM sends an OFF signal to throttle control motor relay and battery voltage is not provided to the ECM.

CONSULT-II Reference Value in Data Monitor Mode

ABS006TM

Specification data are reference values.

MONITOR ITEM	CONDITION	SPECIFICATION
THRTL RELAY	● Ignition switch: ON	ON

On Board Diagnosis Logic

ABS006TN

These self-diagnoses have the one trip detection logic.

DTC No.	Trouble diagnosis name	DTC detecting condition	Possible cause
P1124 1124	Throttle control motor relay circuit short	ECM detects the throttle control motor relay is stuck ON.	● Harness or connectors (Throttle control motor relay circuit is shorted) ● Throttle control motor relay
P1126 1126	Throttle control motor relay circuit open	ECM detects a voltage of power source for throttle control motor is excessively low.	● Harness or connectors (Throttle control motor relay circuit is open) ● Throttle control motor relay

FAIL-SAFE MODE

When the malfunction is detected, ECM enters fail-safe mode and the MIL lights up.

Engine operating condition in fail-safe mode
ECM stops the electric throttle control actuator control, throttle valve is maintained at a fixed opening (approx. 5 degrees) by the return spring.

DTC Confirmation Procedure

ABS006TO

NOTE:
If DTC Confirmation Procedure has been previously conducted, always turn ignition switch OFF and wait at least 10 seconds before conducting the next test.

PROCEDURE FOR DTC P1124

TESTING CONDITION:
Before performing the following procedure, confirm that battery voltage is more than 8V.

With CONSULT-II

1. Turn ignition switch ON and wait at least 1 second.
2. Select “DATA MONITOR” mode with CONSULT-II.
3. If DTC is detected, go to EC-435, "Diagnostic Procedure" .

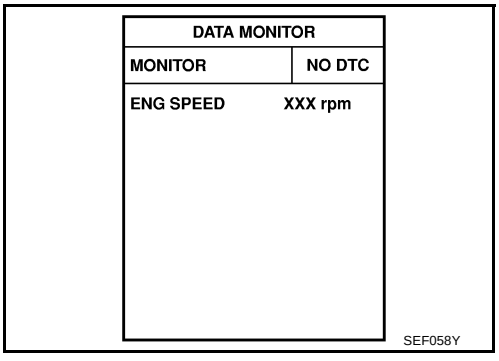

With GST

Follow the procedure “With CONSULT-II” above.

PROCEDURE FOR DTC P1126

With CONSULT-II

1. Turn ignition switch ON and wait at least 2 seconds.
2. Select “DATA MONITOR””mode with CONSULT-II.
3. Start engine and let it idle for 5 seconds.
4. If DTC is detected, go to EC-435, "Diagnostic Procedure" .

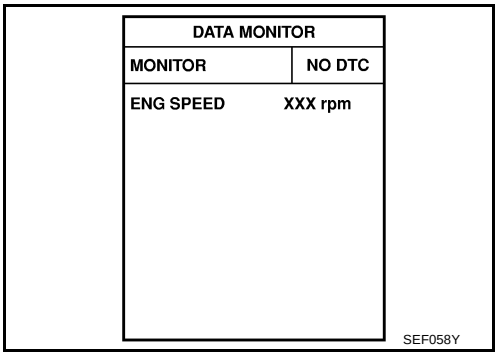

With GST

Follow the procedure “With CONSULT-II” above.

Wiring Diagram

ABS006TP

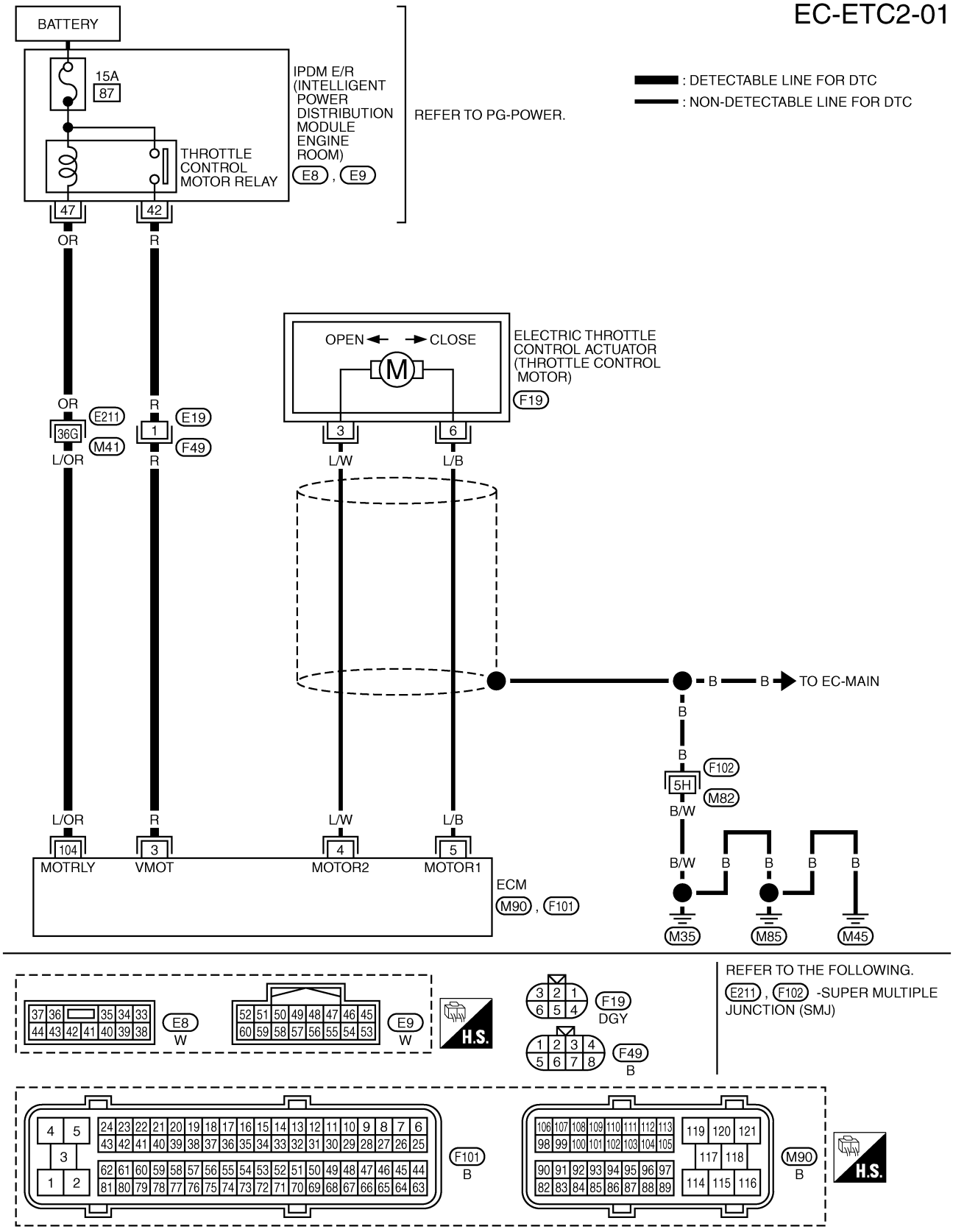

TBWM0400E

Specification data are reference values and are measured between each terminal and ground.

CAUTION:
Do not use ECM ground terminals when measuring input/output voltage. Doing so may result in damage to the ECM's transistor. Use a ground other than ECM terminals, such as the ground.

TERMINAL NO.	WIRE COLOR	ITEM	CONDITION	DATA (DC Voltage)
3	R	Throttle control motor relay power supply	**[Ignition switch: ON]**	BATTERY VOLTAGE (11 - 14V)
104	L/OR	Throttle control motor relay	**[Ignition switch: OFF]**	BATTERY VOLTAGE (11 - 14V)
			[Ignition switch: ON]	0 - 1.0V

Diagnostic Procedure

ABS006TQ

1. CHECK THROTTLE CONTROL MOTOR RELAY POWER SUPPLY CIRCUIT-I

1. Turn ignition switch OFF.
2. Check voltage between ECM terminal 104 and ground with CONSULT-II or tester.

Voltage: Battery voltage

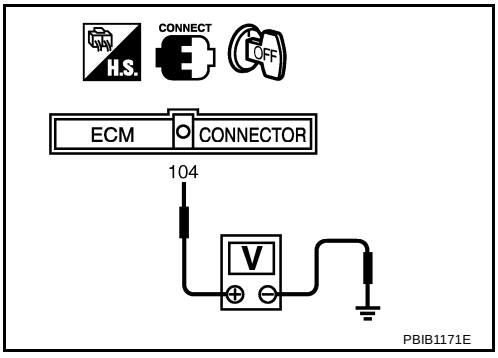

OK or NG

OK >> GO TO 5.
NG >> GO TO 2.

2. CHECK THROTTLE CONTROL MOTOR RELAY POWER SUPPLY CIRCUIT-II

1. Disconnect ECM harness connector.
2. Disconnect IPDM E/R harness connector E9.
3. Check continuity between ECM terminal 104 and IPDM E/R terminal 47.
   Refer to Wiring Diagram.

Continuity should exist.

4. Also check harness for short to ground and short to power.

OK or NG

OK >> GO TO 4.
NG >> GO TO 3.

3. DETECT MALFUNCTIONING PART

Check the following.

- Harness connectors E211, M41
- Harness for open or short between ECM and IPDM E/R

>> Repair open circuit or short to ground or short to power in harness or connectors.

4. CHECK FUSE

1. Disconnect 15A fuse.
2. Check 15A fuse for blown.

OK or NG

OK >> GO TO 8.
NG >> Replace 15A fuse.

5. CHECK THROTTLE CONTROL MOTOR RELAY INPUT SIGNAL CIRCUIT-I

1. Check voltage between ECM terminal 3 and ground under the following conditions with CONSULT-II or tester.

Ignition switch	Voltage
OFF	Approximately 0V
ON	Battery voltage (11 - 14V)

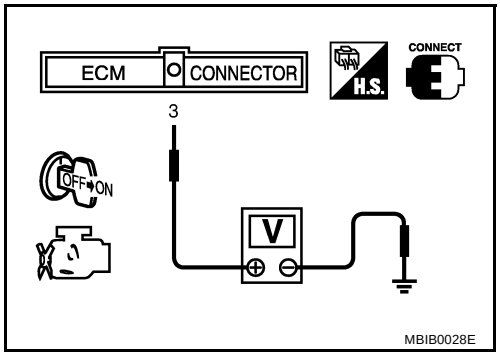

OK or NG

OK >> GO TO 8.
NG >> GO TO 6.

6. CHECK THROTTLE CONTROL MOTOR RELAY INPUT SIGNAL CIRCUIT-II

1. Turn ignition switch OFF.
2. Disconnect ECM harness connector.
3. Disconnect IPDM E/R harness connector E8.
4. Check continuity between ECM terminal 3 and IPDM E/R terminal 42.
   Refer to Wiring Diagram.

   Continuity should exist.

5. Also check harness for short to ground and short to power.

OK or NG

OK >> GO TO 8.
NG >> GO TO 7.

7. DETECT MALFUNCTIONING PART

Check the following.

- Harness connectors E19, F49
- Harness for open or short between ECM and IPDM E/R

>> Repair open circuit or short to ground or short to power in harness or connectors.

8. CHECK INTERMITTENT INCIDENT

Refer to EC-163, "TROUBLE DIAGNOSIS FOR INTERMITTENT INCIDENT" .

OK or NG

OK >> Replace IPDM E/R. Refer to PG-18, "IPDM E/R (INTELLIGENT POWER DISTRIBUTION MODULE ENGINE ROOM)" .
NG >> Repair or replace harness or connectors.

DTC P1128 THROTTLE CONTROL MOTOR

PFP:16119

Component Description

ABS006TR

The throttle control motor is operated by the ECM and it opens and closes the throttle valve.
The current opening angle of the throttle valve is detected by the throttle position sensor and it provides feedback to the ECM to control the throttle control motor to make the throttle valve opening angle properly in response to driving condition.

On Board Diagnosis Logic

ABS006TS

This self-diagnosis has the one trip detection logic.

DTC No.	Trouble diagnosis name	DTC detecting condition	Possible cause
P1128 1128	Throttle control motor circuit short	ECM detects short in both circuits between ECM and throttle control motor.	● Harness or connectors (Throttle control motor circuit is shorted.) ● Electric throttle control actuator (Throttle control motor)

FAIL-SAFE MODE

When the malfunction is detected, the ECM enters fail-safe mode and the MIL lights up.

Engine operating condition in fail-safe mode
ECM stops the electric throttle control actuator control, throttle valve is maintained at a fixed opening (approx. 5 degrees) by the return spring.

DTC Confirmation Procedure

ABS006TT

NOTE:
If DTC Confirmation Procedure has been previously conducted, always turn ignition switch OFF and wait at least 10 seconds before conducting the next test.

WITH CONSULT-II

1. Turn ignition switch ON and wait at least 2 seconds.
2. Select “DATA MONITOR” mode with CONSULT-II.
3. Start engine and let it idle for 5 seconds.
4. If DTC is detected, go to EC-439, "Diagnostic Procedure" .

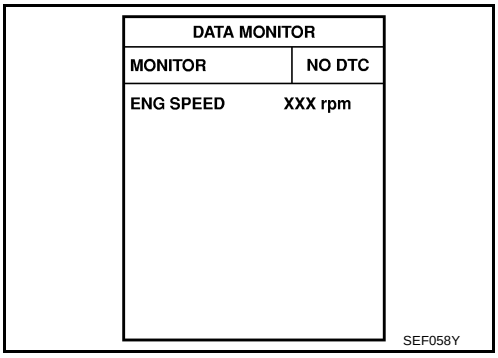

WITH GST

Follow the procedure “WITH CONSULT-II” above.

Wiring Diagram

ABS006TU

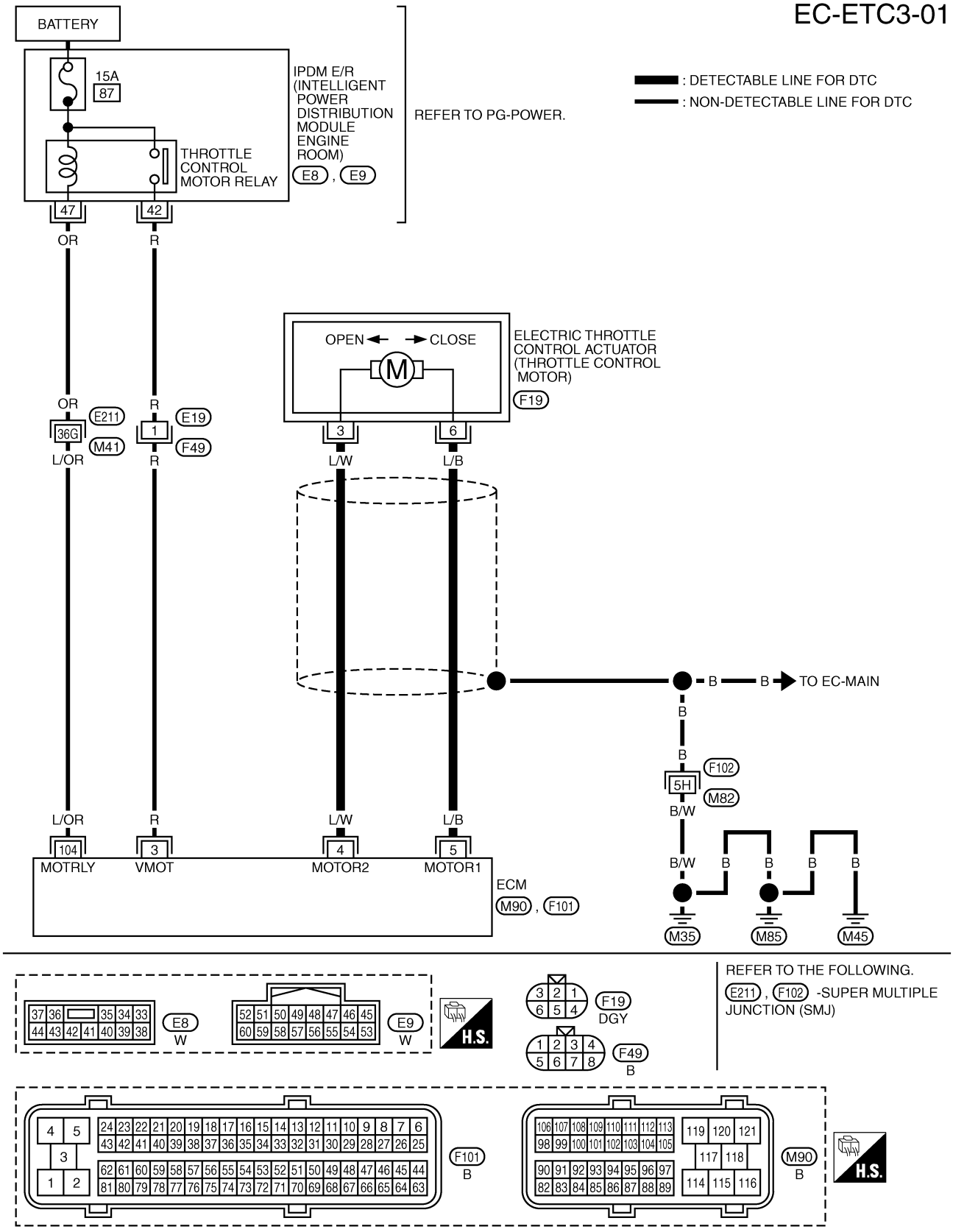

TBWM0401E

Specification data are reference values and are measured between each terminal and ground.
Pulse signal is measured by CONSULT-II.

CAUTION:
Do not use ECM ground terminals when measuring input/output voltage. Doing so may result in damage to the ECM's transistor. Use a ground other than ECM terminals, such as the ground.

TERMINAL NO.	WIRE COLOR	ITEM	CONDITION	DATA (DC Voltage)
4	L/W	Throttle control motor (Close)	**[Ignition switch: ON]** ● Engine stopped ● Selector lever: D ● Accelerator pedal: Fully released	0 - 14V★ 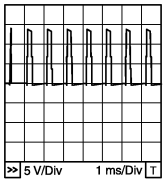 PBIB1104E
5	L/B	Throttle control motor (Open)	**[Ignition switch: ON]** ● Engine stopped ● Selector lever: D ● Accelerator pedal: Fully depressed	0 - 14V★ 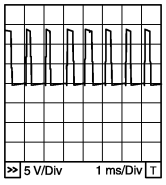 PBIB1105E

★: Average voltage for pulse signal (Actual pulse signal can be confirmed by oscilloscope.)

Diagnostic Procedure

ABS006TV

1. CHECK GROUND CONNECTIONS

1. Turn ignition switch OFF.
2. Loosen and retighten ground three screws on the body. Refer to EC-170, "Ground Inspection" .

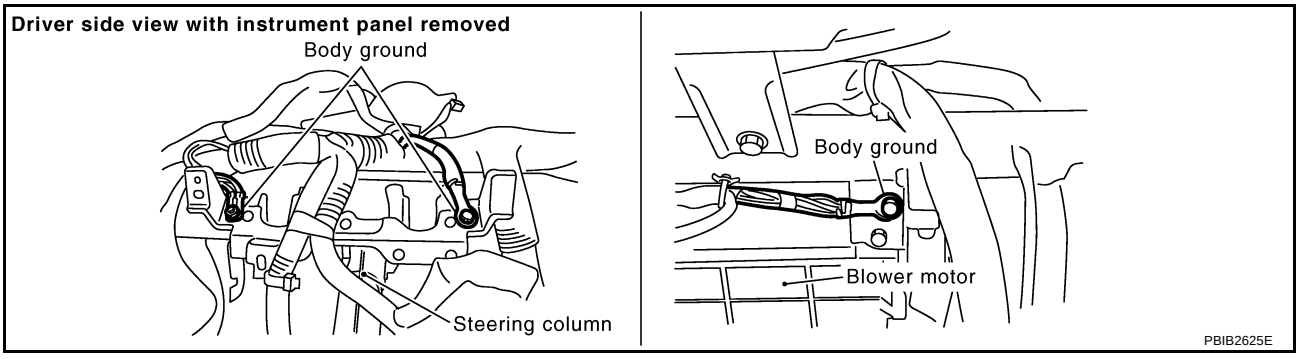

OK or NG

OK >> GO TO 2.
NG >> Repair or replace ground connections.

2. CHECK THROTTLE CONTROL MOTOR OUTPUT SIGNAL CIRCUIT FOR OPEN OR SHORT

1. Disconnect electric throttle control actuator harness connector.
2. Disconnect ECM harness connector.
3. Check harness continuity between the following terminals. Refer to Wiring Diagram.

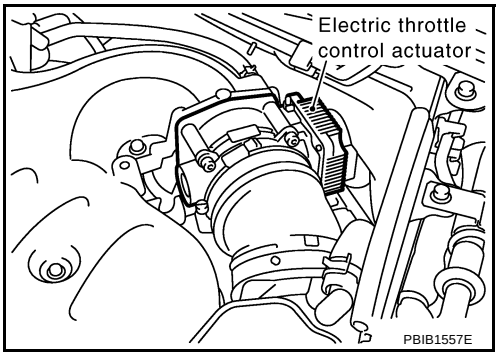

Electric throttle control actuator terminal	ECM terminal	Continuity
3	5	Should not exist
	4	Should exist
6	5	Should exist
	4	Should not exist

4. Also check harness for short to ground and short to power.

OK or NG

OK >> GO TO 3.
NG >> Repair or replace.

3. CHECK THROTTLE CONTROL MOTOR

Refer to EC-440, "Component Inspection" .

OK or NG

OK >> GO TO 4.
NG >> GO TO 5.

4. CHECK INTERMITTENT INCIDENT

Refer to EC-163, "TROUBLE DIAGNOSIS FOR INTERMITTENT INCIDENT" .

OK or NG

OK >> GO TO 5.
NG >> Repair or replace harness or connectors.

5. REPLACE ELECTRIC THROTTLE CONTROL ACTUATOR

1. Replace the electric throttle control actuator.
2. Perform EC-96, "Throttle Valve Closed Position Learning" .
3. Perform EC-97, "Idle Air Volume Learning" .

>> **INSPECTION END**

Component Inspection

ABS006TW

THROTTLE CONTROL MOTOR

1. Disconnect electric throttle control actuator harness connector.
2. Check resistance between terminals 3 and 6.

Resistance: Approximately 1 - 15 Ω [at 25 °C (77°F)]

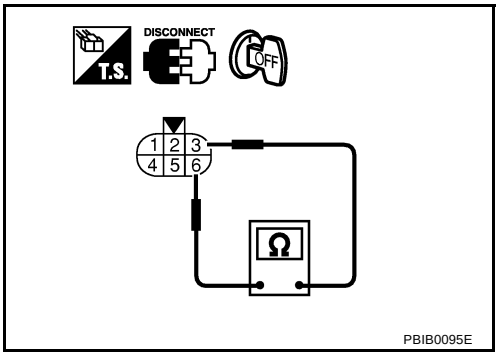

3. If NG, replace electric throttle control actuator and go to next step.
4. Perform EC-96, "Throttle Valve Closed Position Learning" .
5. Perform EC-97, "Idle Air Volume Learning" .

Removal and Installation

ABS006TX

ELECTRIC THROTTLE CONTROL ACTUATOR

Refer to EM-19, "INTAKE MANIFOLD COLLECTOR" .

DTC P1146, P1166 HO2S2

PFP:226A0

Component Description

ABS006UE

The heated oxygen sensor 2, after three way catalyst 1, monitors the oxygen level in the exhaust gas on each bank.
Even if switching characteristics of the air fuel ratio (A/F) sensor 1 are shifted, the air-fuel ratio is controlled to stoichiometric, by the signal from the heated oxygen sensor 2.
This sensor is made of ceramic zirconia. The zirconia generates voltage from approximately 1V in richer conditions to 0V in leaner conditions.
Under normal conditions the heated oxygen sensor 2 is not used for engine control operation.

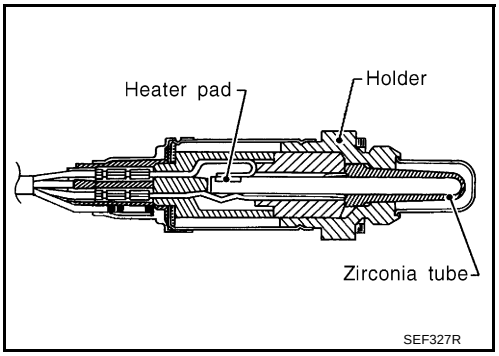

CONSULT-II Reference Value in Data Monitor Mode

ABS006UF

Specification data are reference values.

MONITOR ITEM	CONDITION		SPECIFICATION
HO2S2 (B1) HO2S2 (B2)	● Warm-up condition ● After keeping engine speed between 3,500 and 4,000 rpm for 1 minute and at idle for 1 minute under no load.	Revving engine from idle to 3,000 rpm quickly.	0 - 0.3V ←→ Approx. 0.6 - 1.0V
HO2S2 MNTR (B1) HO2S2 MNTR (B2)			LEAN ←→ RICH

On Board Diagnosis Logic

ABS006UG

The heated oxygen sensor 2 has a much longer switching time between rich and lean than the air fuel ratio (A/F) sensor 1. The oxygen storage capacity of the three way catalyst 1 causes the longer switching time. To judge the malfunctions of heated oxygen sensor 2, ECM monitors whether the minimum voltage of sensor is sufficiently low during the various driving condition such as fuel-cut.

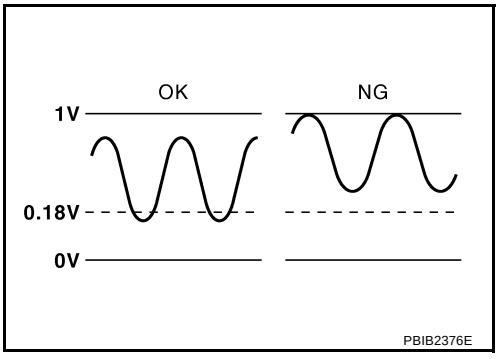

DTC No.	Trouble diagnosis name	DTC detecting condition	Possible cause
P1146 1146 (Bank 1)	Heated oxygen sensor 2 minimum voltage monitoring	The minimum voltage from the sensor is not reached to the specified voltage.	● Harness or connectors (The sensor circuit is open or shorted) ● Heated oxygen sensor 2 ● Fuel pressure ● Fuel injector
P1166 1166 (Bank 2)			

DTC Confirmation Procedure

ABS006UH

NOTE:
If DTC confirmation Procedure has been previously conducted, always turn ignition switch OFF and wait at least 10 seconds before conducting the next test.

WITH CONSULT-II

TESTING CONDITION:
For better results, perform "DTC WORK SUPPORT" at a temperature of 0 to 30 °C (32 to 86 °F).

1. Turn ignition switch ON and select "DATA MONITOR" mode with CONSULT-II.
2. Start engine and warm it up to the normal operating temperature.
3. Turn ignition switch OFF and wait at least 10 seconds.
4. Start engine and keep the engine speed between 3,500 and 4,000 rpm for at least 1 minute under no load.
5. Let engine idle for 1 minute.
6. Make sure that "COOLAN TEMP/S" indicates more than 70°C (158°F).
   If not, warm up engine and go to next step when "COOLAN TEMP/S" indication reaches to 70°C (158°F).

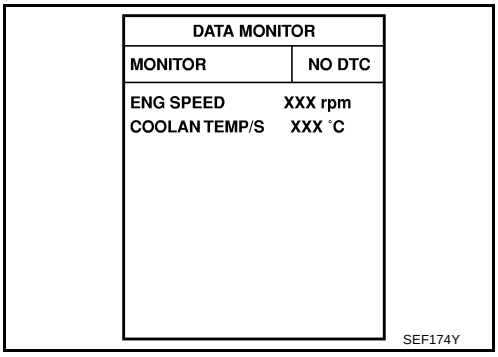

7. Open engine hood.
8. Select "HO2S2 (B1) P1146" or "HO2S2 (B2) P1166" of "HO2S2" in "DTC WORK SUPPORT" mode with CONSULT-II.
9. Start engine and following the instruction of CONSULT-II.

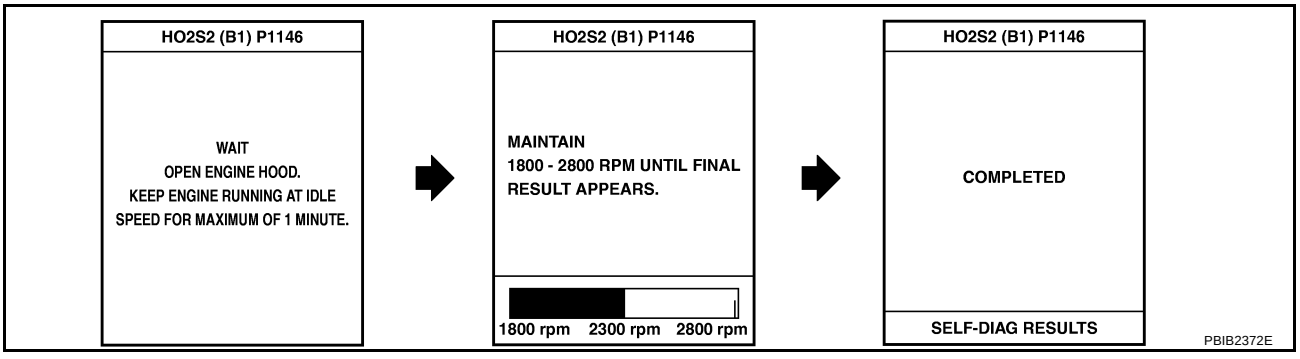

NOTE:
It will take at most 10 minutes until "COMPLETED" is displayed.

10. Make sure that "OK" is displayed after touching "SELF-DIAG RESULTS".
    If "NG" is displayed, refer to EC-448, "Diagnostic Procedure" .
    If "CAN NOT BE DIAGNOSED" is displayed, perform the following.

a. Turn ignition switch OFF and leave the vehicle in a cool place (soak the vehicle).
b. Return to step 1.

Overall Function Check

ABS006UI

Use this procedure to check the overall function of the heated oxygen sensor 2 circuit. During this check, a 1st trip DTC might not be confirmed.

WITH GST

1. Start engine and warm it up to the normal operating temperature.
2. Turn ignition switch OFF and wait at least 10 seconds.
3. Start engine and keep the engine speed between 3,500 and 4,000 rpm for at least 1 minute under no load.
4. Let engine idle for 1 minute.
5. Set voltmeter probes between ECM terminal 74 [HO2S2 (B1) signal] or 55 [HO2S2 (B2) signal] and ground.

6. Check the voltage when revving up to 4,000 rpm under no load at least 10 times.
   (Depress and release accelerator pedal as soon as possible.)
   The voltage should be below 0.18V at least once during this procedure.
   If the voltage can be confirmed in step 6, step 7 is not necessary.
7. Keep vehicle at idling for 10 minutes, then check the voltage. Or check the voltage when coasting from 80 km/h (50 MPH) in D position with “OD” OFF.
   The voltage should be below 0.18V at least once during this procedure.
8. If NG, go to EC-448, "Diagnostic Procedure" .

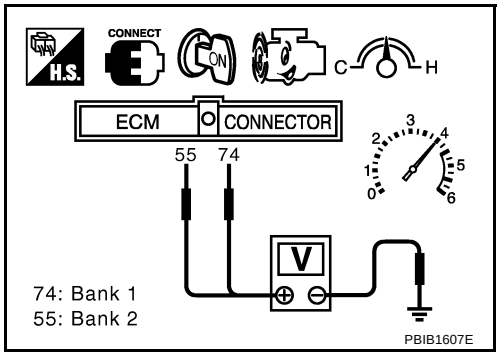

Wiring Diagram
BANK 1

ABS006UJ

EC-O2S2B1-01

: DETECTABLE LINE FOR DTC
: NON-DETECTABLE LINE FOR DTC

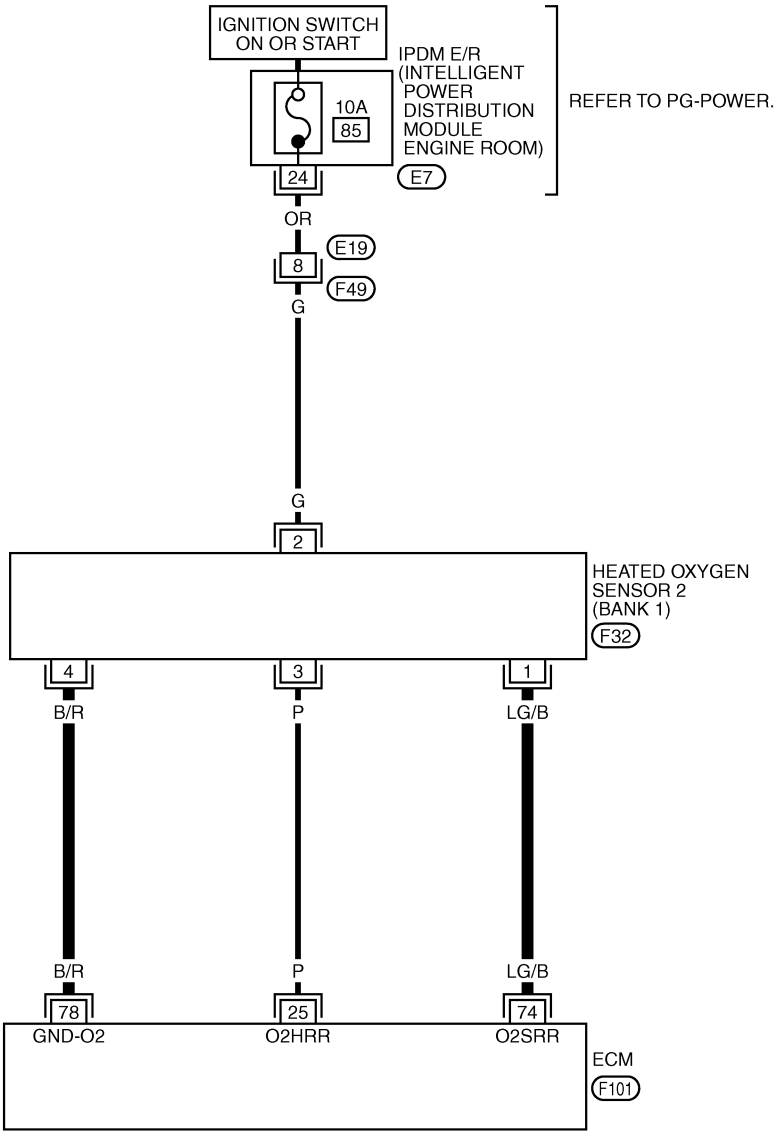

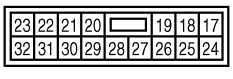

E7
GY

F32
B

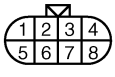

F49
B

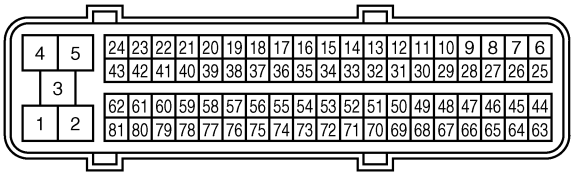

F101
B

TBWM0292E

Specification data are reference values and are measured between each terminal and ground.

CAUTION:

Do not use ECM ground terminals when measuring input/output voltage. Doing so may result in damage to the ECM's transistor. Use a ground other than ECM terminals, such as the ground.

TERMINAL NO.	WIRE COLOR	ITEM	CONDITION	DATA (DC Voltage)
74	LG/B	Heated oxygen sensor 2 (bank 1)	**[Engine is running]** ● **Warm-up condition** ● Revving engine from idle to 3,000 rpm quickly after the following conditions are met – After keeping the engine speed between 3,500 and 4,000 rpm for 1 minute and at idle for 1 minute under no load	0 - Approximately 1.0V
78	B/R	Sensor ground (Heated oxygen sensor)	**[Engine is running]** ● **Warm-up condition** ● Idle speed	Approximately 0V

BANK 2

EC-O2S2B2-01

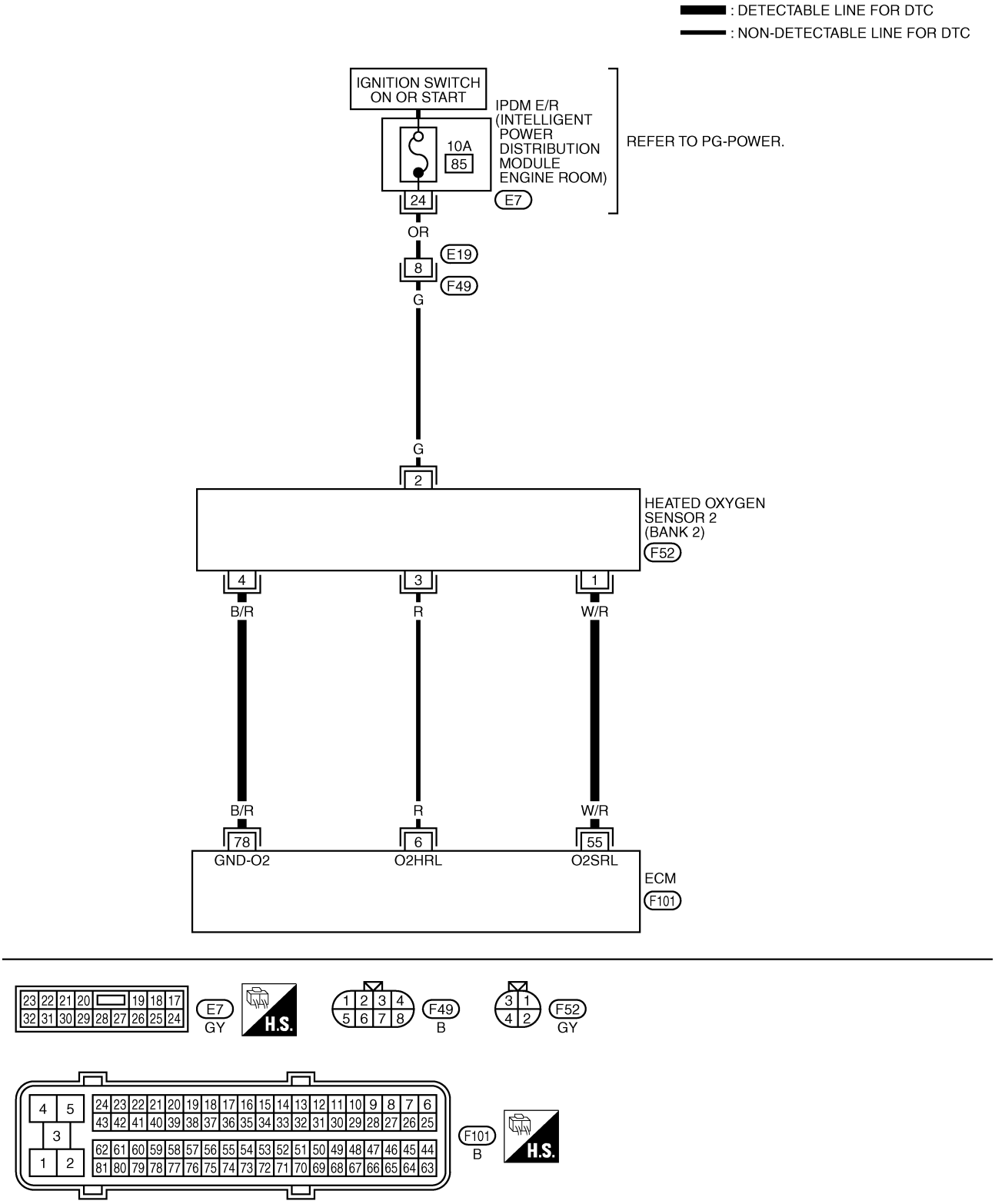

TBWM0293E

Specification data are reference values and are measured between each terminal and ground.

CAUTION:

Do not use ECM ground terminals when measuring input/output voltage. Doing so may result in damage to the ECM's transistor. Use a ground other than ECM terminals, such as the ground.

TERMINAL NO.	WIRE COLOR	ITEM	CONDITION	DATA (DC Voltage)
55	W/R	Heated oxygen sensor 2 (bank 2)	**[Engine is running]** ● **Warm-up condition** ● Revving engine from idle to 3,000 rpm quickly after the following conditions are met – After keeping the engine speed between 3,500 and 4,000 rpm for 1 minute and at idle for 1 minute under no load	0 - Approximately 1.0V
78	B/R	Sensor ground (Heated oxygen sensor)	**[Engine is running]** ● **Warm-up condition** ● Idle speed	Approximately 0V

Diagnostic Procedure

ABS006UK

1. CHECK GROUND CONNECTIONS

1. Turn ignition switch OFF.
2. Loosen and retighten ground three screws on the body. Refer to EC-170, "Ground Inspection" .

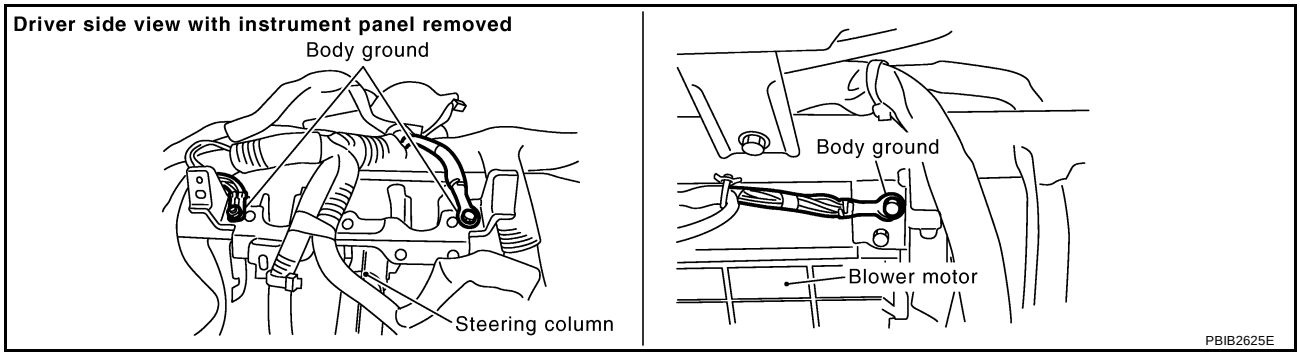

OK or NG

OK >> GO TO 2.
NG >> Repair or replace ground connections.

2. CLEAR THE SELF-LEARNING DATA

With CONSULT-II

1. Start engine and warm it up to normal operating temperature.
2. Select “SELF-LEARNING CONT” in “WORK SUPPORT” mode with CONSULT-II.
3. Clear the self-learning control coefficient by touching “CLEAR”.
4. Run engine for at least 10 minutes at idle speed.
   Is the 1st trip DTC P0172 or P0175 detected?
   Is it difficult to start engine?

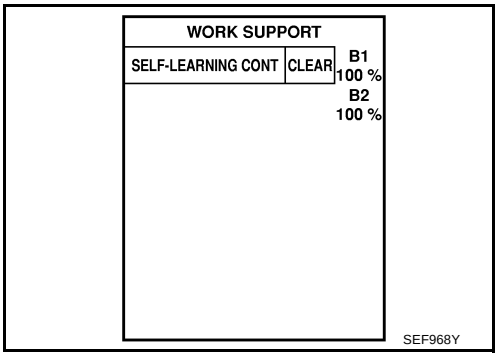

Without CONSULT-II

1. Start engine and warm it up to normal operating temperature.
2. Turn ignition switch OFF.
3. Disconnect mass air flow sensor harness connector, and restart and run engine for at least 5 seconds at idle speed.
4. Stop engine and reconnect mass air flow sensor harness connector.
5. Make sure DTC P0102 is displayed.
6. Erase the DTC memory. Refer to EC-68, "HOW TO ERASE EMISSION-RELATED DIAGNOSTIC INFORMATION" .
7. Make sure DTC P0000 is displayed.
8. Run engine for at least 10 minutes at idle speed.
   Is the 1st trip DTC P0172 or P0175 detected?
   Is it difficult to start engine?

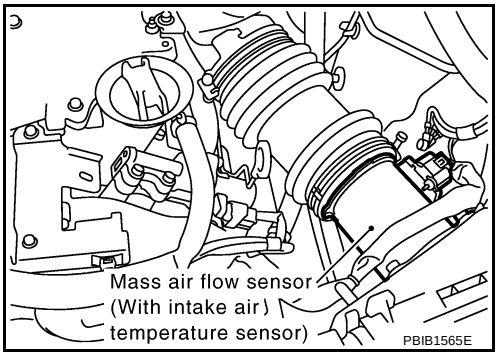

Yes or No

Yes >> Perform trouble diagnosis for DTC P0172, P0175. Refer to EC-258 .
No >> GO TO 3.

3. CHECK HO2S2 GROUND CIRCUIT FOR OPEN AND SHORT

1. Turn ignition switch OFF.
2. Disconnect heated oxygen sensor 2 harness connector.
3. Disconnect ECM harness connector.
4. Check harness continuity between HO2S2 terminal 4 and ECM terminal 78.
   Refer to Wiring Diagram.

   Continuity should exist.

5. Also check harness for short to ground and short to power.

OK or NG

OK >> GO TO 4.
NG >> Repair open circuit or short to ground or short to power in harness or connectors.

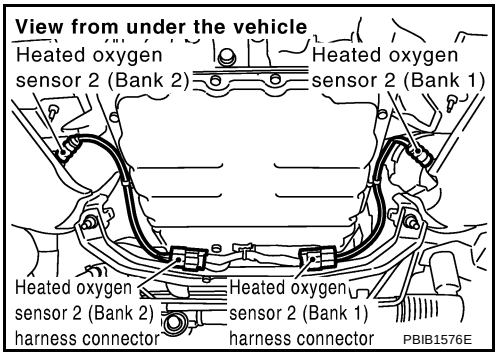

4. CHECK HO2S2 INPUT SIGNAL CIRCUIT FOR OPEN AND SHORT

1. Check harness continuity between ECM terminal and HO2S2 terminal as follows.
   Refer to Wiring Diagram.

DTC	Terminals		Bank
	ECM	Sensor	
P1146	74	1	1
P1166	55	1	2

Continuity should exist.

2. Check harness continuity between the following terminals and ground.
   Refer to Wiring Diagram.

DTC	Terminals		Bank
	ECM	Sensor	
P1146	74	1	1
P1166	55	1	2

Continuity should not exist.

3. Also check harness for short to ground or short to power.

OK or NG

OK >> GO TO 5.
NG >> Repair open circuit or short to ground or short to power in harness or connectors.

5. CHECK HEATED OXYGEN SENSOR 2

Refer to EC-450, "Component Inspection" .

OK or NG

OK >> GO TO 6.
NG >> Replace malfunctioning heated oxygen sensor 2.

6. CHECK INTERMITTENT INCIDENT

Refer to EC-163, "TROUBLE DIAGNOSIS FOR INTERMITTENT INCIDENT" .

>> **INSPECTION END**

Component Inspection

ABS006UL

HEATED OXYGEN SENSOR 2

With CONSULT-II

1. Turn ignition switch ON and select “DATA MONITOR” mode with CONSULT-II.
2. Start engine and warm it up to the normal operating temperature.
3. Turn ignition switch OFF and wait at least 10 seconds.
4. Start engine and keep the engine speed between 3,500 and 4,000 rpm for at least 1 minute under no load.
5. Let engine idle for 1 minute.

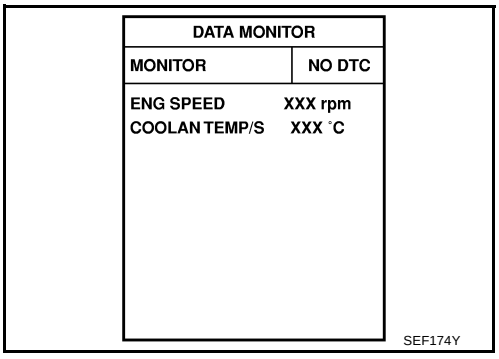

6. Select “FUEL INJECTION” in “ACTIVE TEST” mode, and select “HO2S2 (B1)/(B2)” as the monitor item with CONSULT-II.

ACTIVE TEST	
FUEL INJECTION	25 %
MONITOR	
ENG SPEED	XXX rpm
HO2S2 (B1)	XXX V
HO2S2 (B2)	XXX V

PBIB1672E

7. Check “HO2S2 (B1)/(B2)” at idle speed when adjusting “FUEL INJECTION” to ±25%.

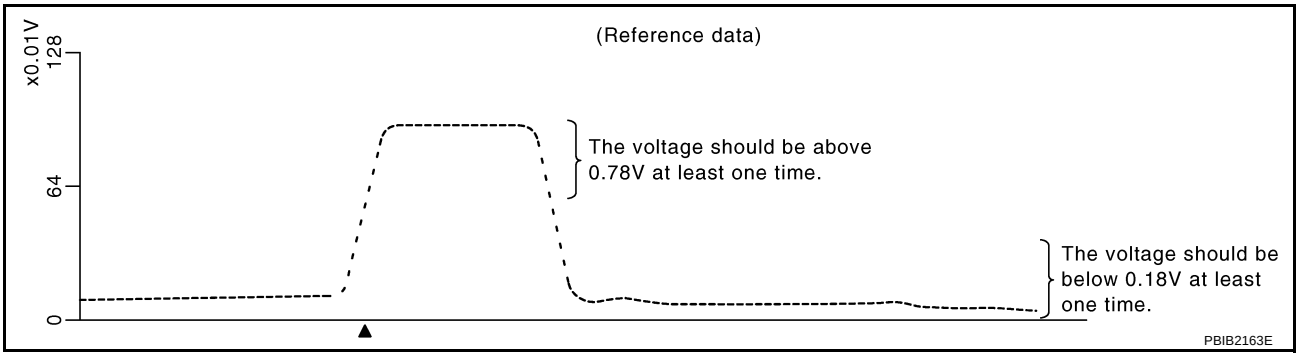

“HO2S2 (B1)/(B2)” should be above 0.78V at least once when the “FUEL INJECTION” is +25%.
“HO2S2 (B1)/(B2)” should be below 0.18V at least once when the “FUEL INJECTION” is –25%.

CAUTION:

- **Discard any heated oxygen sensor which has been dropped from a height of more than 0.5 m (19.7 in) onto a hard surface such as a concrete floor; use a new one.**
- **Before installing new oxygen sensor, clean exhaust system threads using Oxygen Sensor Thread Cleaner tool J-43897-18 or J-43897-12 and approved anti-seize lubricant.**

Without CONSULT-II

1. Start engine and warm it up to the normal operating temperature.
2. Turn ignition switch OFF and wait at least 10 seconds.
3. Start engine and keep the engine speed between 3,500 and 4,000 rpm for at least 1 minute under no load.
4. Let engine idle for 1 minute.
5. Set voltmeter probes between ECM terminal 74 [HO2S2 (B1) signal] or 55 [HO2S2 (B2) signal] and ground.
6. Check the voltage when revving up to 4,000 rpm under no load at least 10 times.
   (Depress and release accelerator pedal as soon as possible.)
   The voltage should be above 0.78V at least once during this procedure.
   If the voltage is above 0.78V at step 6, step 7 is not necessary.
7. Keep vehicle at idling for 10 minutes, then check voltage. Or check the voltage when coasting from 80 km/h (50 MPH) in D position with “OD” OFF.
   The voltage should be below 0.18V at least once during this procedure.

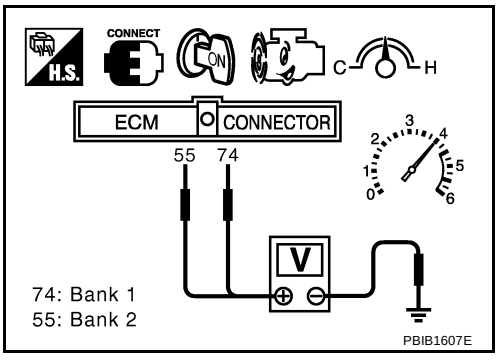

8. If NG, replace heated oxygen sensor 2.

CAUTION:

- **Discard any heated oxygen sensor which has been dropped from a height of more than 0.5 m (19.7 in) onto a hard surface such as a concrete floor; use a new one.**

- **Before installing new oxygen sensor, clean exhaust system threads using Oxygen Sensor Thread Cleaner tool J-43897-18 or J-43897-12 and approved anti-seize lubricant.**

Removal and Installation

ABS006UM

HEATED OXYGEN SENSOR 2

Refer to EM-26, "EXHAUST MANIFOLD AND THREE WAY CATALYST" .

DTC P1147, P1167 HO2S2

PFP:226A0

Component Description

ABS006UN

The heated oxygen sensor 2, after three way catalyst 1, monitors the oxygen level in the exhaust gas on each bank.
Even if switching characteristics of the air fuel ratio (A/F) sensor 1 are shifted, the air-fuel ratio is controlled to stoichiometric, by the signal from the heated oxygen sensor 2.
This sensor is made of ceramic zirconia. The zirconia generates voltage from approximately 1V in richer conditions to 0V in leaner conditions.
Under normal conditions the heated oxygen sensor 2 is not used for engine control operation.

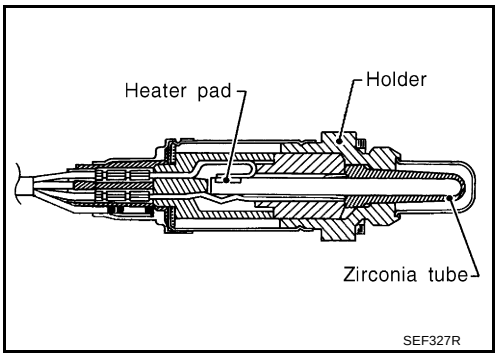

CONSULT-II Reference Value in Data Monitor Mode

ABS006UO

Specification data are reference values.

MONITOR ITEM	CONDITION		SPECIFICATION
HO2S2 (B1) HO2S2 (B2)	● Warm-up condition ● After keeping engine speed between 3,500 and 4,000 rpm for 1 minute and at idle for 1 minute under no load.	Revving engine from idle to 3,000 rpm quickly.	0 - 0.3V ←→ Approx. 0.6 - 1.0V
HO2S2 MNTR (B1) HO2S2 MNTR (B2)			LEAN ←→ RICH

On Board Diagnosis Logic

ABS006UP

The heated oxygen sensor 2 has a much longer switching time between rich and lean than the air fuel ratio (A/F) sensor 1. The oxygen storage capacity of the three way catalyst 1 causes the longer switching time. To judge the malfunctions of heated oxygen sensor 2, ECM monitors whether the maximum voltage of the sensor is sufficiently high during the various driving condition such as fuel-cut.

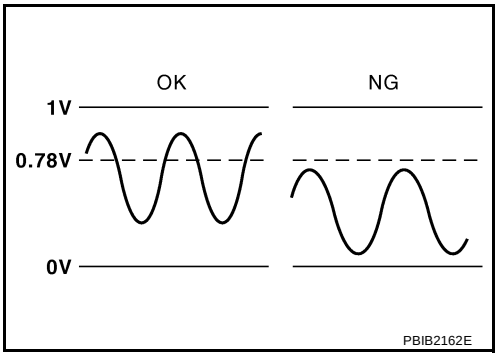

DTC No.	Trouble diagnosis name	DTC detecting condition	Possible cause
P1147 1147 (Bank 1)	Heated oxygen sensor 2 maximum voltage monitoring	The maximum voltage from the sensor is not reached to the specified voltage.	● Harness or connectors (The sensor circuit is open or shorted) ● Heated oxygen sensor 2 ● Fuel pressure ● Fuel injector ● Intake air leaks
P1167 1167 (Bank 2)			

DTC Confirmation Procedure

ABS006UQ

NOTE:
If DTC confirmation Procedure has been previously conducted, always turn ignition switch OFF and wait at least 10 seconds before conducting the next test.

WITH CONSULT-II

TESTING CONDITION:
For better results, perform DTC WORK SUPPORT at a temperature of 0 to 30 °C (32 to 86 °F).

1. Turn ignition switch ON and select “DATA MONITOR” mode with CONSULT-II.
2. Start engine and warm it up to the normal operating temperature.
3. Turn ignition switch OFF and wait at least 10 seconds.
4. Start engine and keep the engine speed between 3,500 and 4,000 rpm for at least 1 minute under no load.
5. Let engine idle for 1 minute.
6. Make sure that “COOLAN TEMP/S” indicates more than 70°C (158°F).
   If not, warm up engine and go to next step when “COOLAN TEMP/S” indication reaches to 70°C (158°F).

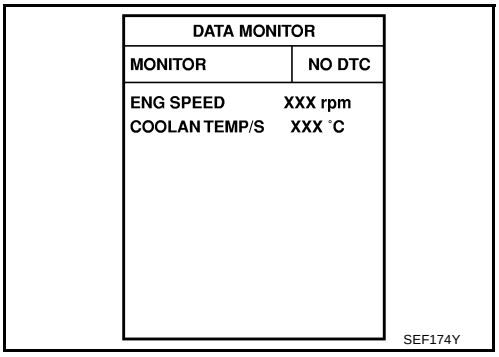

7. Open engine hood.
8. Select “HO2S2 (B1) P1147” or “HO2S2 (B2) P1167” of “HO2S2” in “DTC WORK SUPPORT” mode with CONSULT-II.
9. Start engine and following the instruction of CONSULT-II.

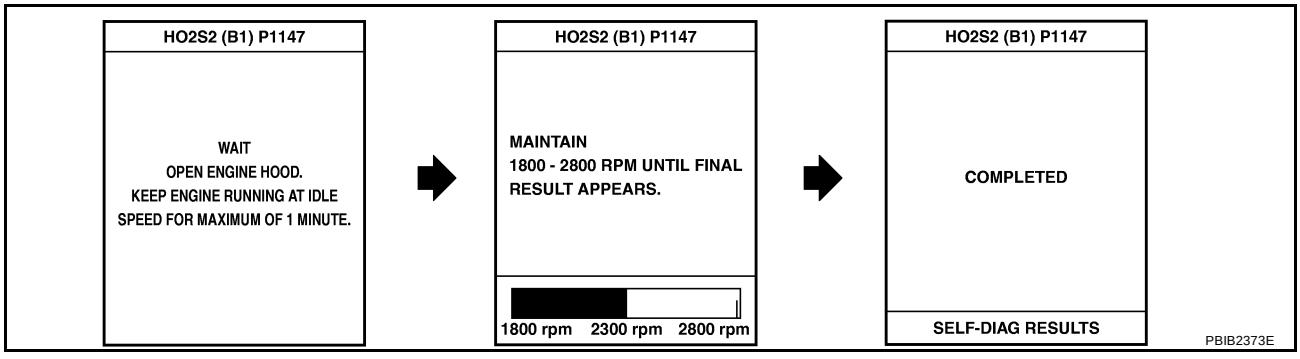

NOTE:
It will take at most 10 minutes until “COMPLETED” is displayed.

10. Make sure that “OK” is displayed after touching “SELF-DIAG RESULTS”.
    If “NG” is displayed, refer to EC-459, "Diagnostic Procedure" .
    If “CAN NOT BE DIAGNOSED” is displayed, perform the following.

a. Turn ignition switch OFF and leave the vehicle in a cool place (soak the vehicle).
b. Return to step 1.

Overall Function Check

ABS006UR

Use this procedure to check the overall function of the heated oxygen sensor 2 circuit. During this check, a 1st trip DTC might not be confirmed.

WITH GST

1. Start engine and warm it up to the normal operating temperature.
2. Turn ignition switch OFF and wait at least 10 seconds.
3. Start engine and keep the engine speed between 3,500 and 4,000 rpm for at least 1 minute under no load.
4. Let engine idle for 1 minute.
5. Set voltmeter probes between ECM terminal 74 [HO2S2 (B1) signal] or 55 [HO2S2 (B2) signal] and ground.

6. Check the voltage when revving up to 4,000 rpm under no load at least 10 times.
   (Depress and release accelerator pedal as soon as possible.)
   The voltage should be above 0.78V at least once during this procedure.
   If the voltage can be confirmed in step 6, step 7 is not necessary.
7. Keep vehicle at idling for 10 minutes, then check the voltage. Or check the voltage when coasting from 80 km/h (50 MPH) in D position with “OD” OFF.
   The voltage should be above 0.78V at least once during this procedure.
8. If NG, go to EC-459, "Diagnostic Procedure" .

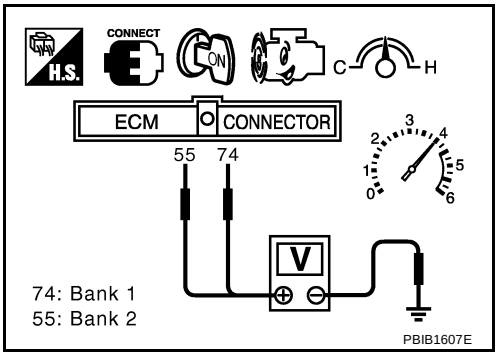

Wiring Diagram
BANK 1

ABS006US

EC-O2S2B1-01

: DETECTABLE LINE FOR DTC
: NON-DETECTABLE LINE FOR DTC

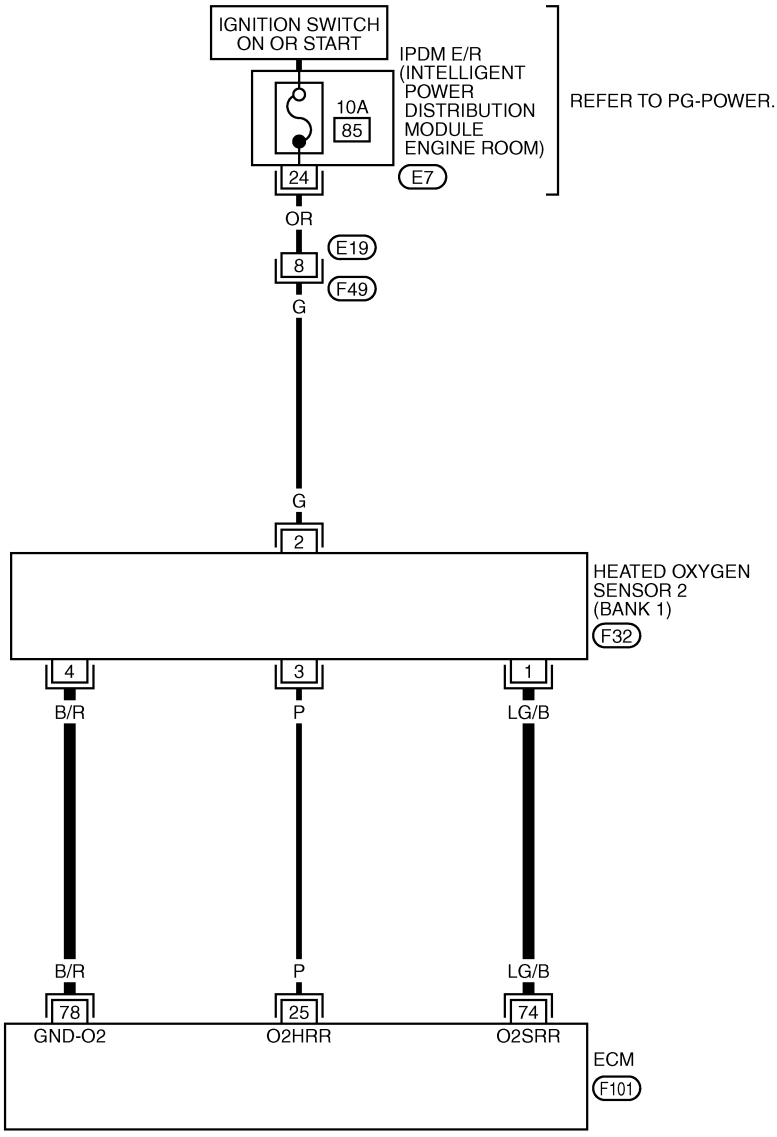

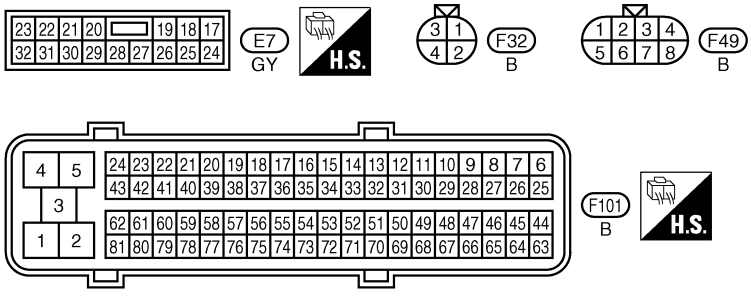

TBWM0292E

Specification data are reference values and are measured between each terminal and ground.

CAUTION:

Do not use ECM ground terminals when measuring input/output voltage. Doing so may result in damage to the ECM's transistor. Use a ground other than ECM terminals, such as the ground.

TERMINAL NO.	WIRE COLOR	ITEM	CONDITION	DATA (DC Voltage)
74	LG/B	Heated oxygen sensor 2 (bank 1)	**[Engine is running]** ● **Warm-up condition** ● Revving engine from idle to 3,000 rpm quickly after the following conditions are met – After keeping the engine speed between 3,500 and 4,000 rpm for 1 minute and at idle for 1 minute under no load	0 - Approximately 1.0V
78	B/R	Sensor ground (Heated oxygen sensor)	**[Engine is running]** ● **Warm-up condition** ● Idle speed	Approximately 0V

BANK 2

EC-O2S2B2-01

: DETECTABLE LINE FOR DTC

: NON-DETECTABLE LINE FOR DTC

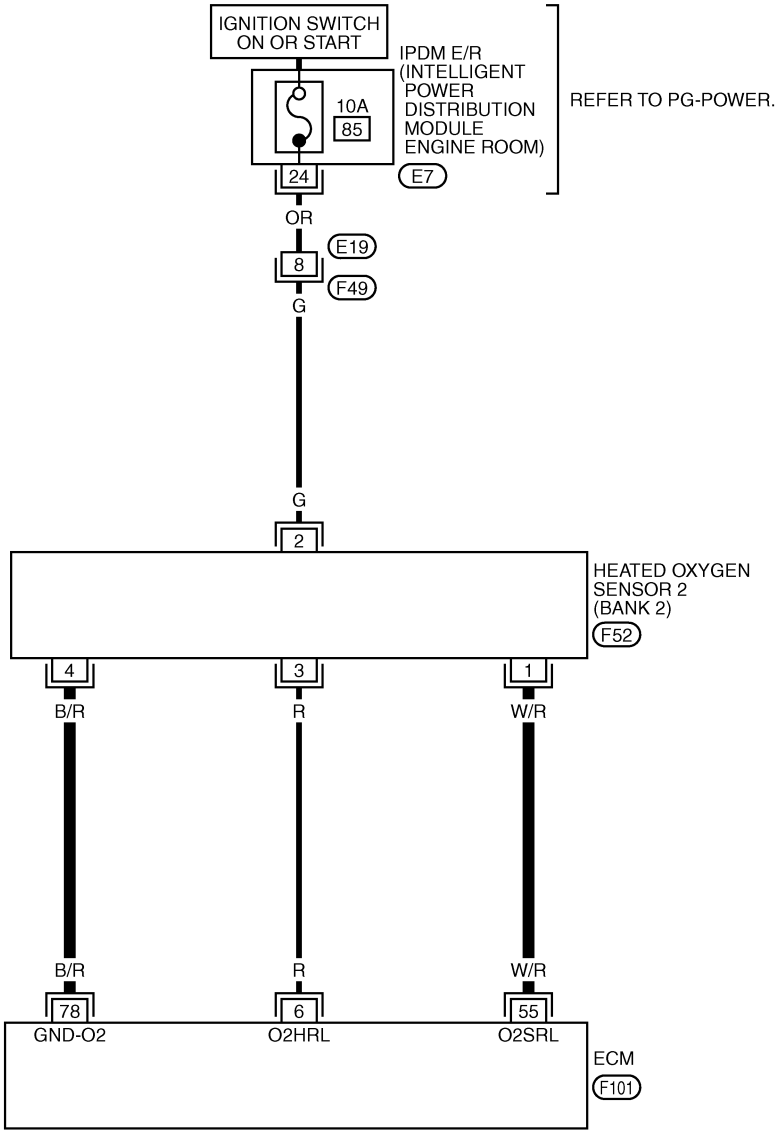

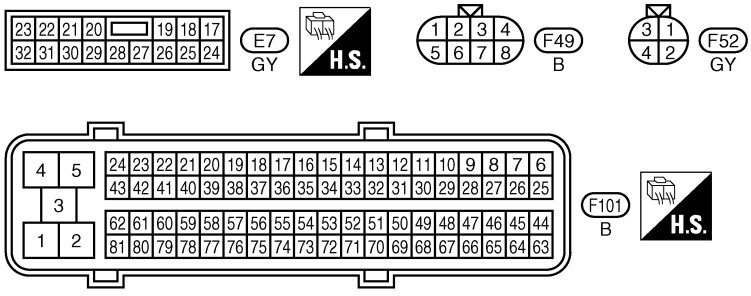

TBWM0293E

Specification data are reference values and are measured between each terminal and ground.

CAUTION:

Do not use ECM ground terminals when measuring input/output voltage. Doing so may result in damage to the ECM's transistor. Use a ground other than ECM terminals, such as the ground.

TERMINAL NO.	WIRE COLOR	ITEM	CONDITION	DATA (DC Voltage)
55	W/R	Heated oxygen sensor 2 (bank 2)	**[Engine is running]** ● **Warm-up condition** ● Revving engine from idle to 3,000 rpm quickly after the following conditions are met – After keeping the engine speed between 3,500 and 4,000 rpm for 1 minute and at idle for 1 minute under no load	0 - Approximately 1.0V
78	B/R	Sensor ground (Heated oxygen sensor)	**[Engine is running]** ● **Warm-up condition** ● Idle speed	Approximately 0V

Diagnostic Procedure

ABS006UT

1. CHECK GROUND CONNECTIONS

1. Turn ignition switch OFF.
2. Loosen and retighten ground three screws on the body. Refer to EC-170, "Ground Inspection" .

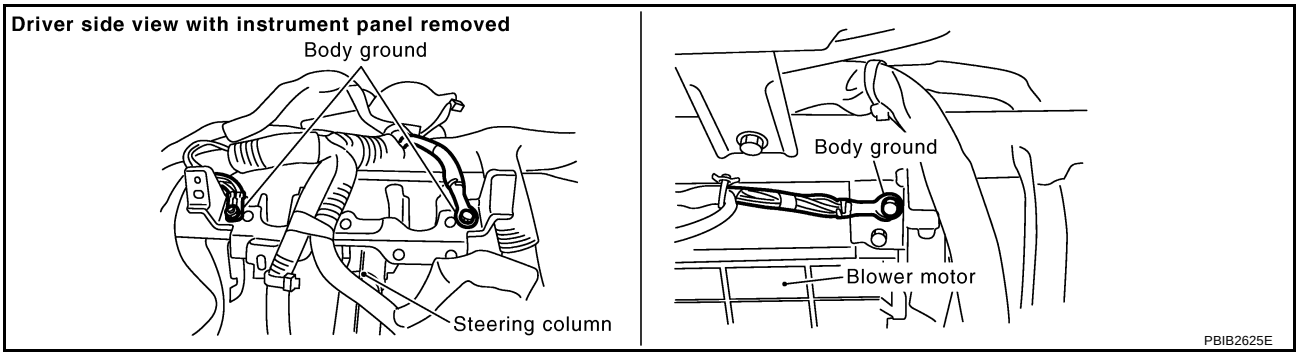

OK or NG

OK >> GO TO 2.
NG >> Repair or replace ground connections.

2. CLEAR THE SELF-LEARNING DATA

With CONSULT-II

1. Start engine and warm it up to normal operating temperature.
2. Select “SELF-LEARNING CONT” in “WORK SUPPORT” mode with CONSULT-II.
3. Clear the self-learning control coefficient by touching “CLEAR”.
4. Run engine for at least 10 minutes at idle speed.
   Is the 1st trip DTC P0171 or P0174 detected?
   Is it difficult to start engine?

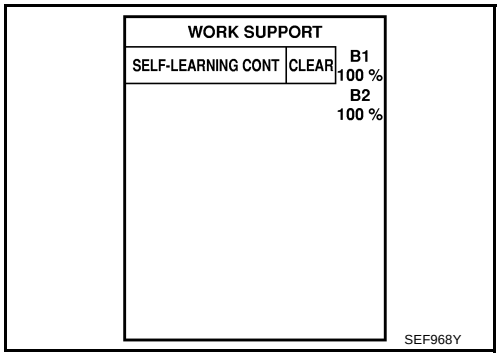

Without CONSULT-II

1. Start engine and warm it up to normal operating temperature.
2. Turn ignition switch OFF.
3. Disconnect mass air flow sensor harness connector, and restart and run engine for at least 5 seconds at idle speed.
4. Stop engine and reconnect mass air flow sensor harness connector.
5. Make sure DTC P0102 is displayed.
6. Erase the DTC memory. Refer to EC-68, "HOW TO ERASE EMISSION-RELATED DIAGNOSTIC INFORMATION" .
7. Make sure DTC P0000 is displayed.
8. Run engine for at least 10 minutes at idle speed.
   Is the 1st trip DTC P0171 or P0174 detected?
   Is it difficult to start engine?

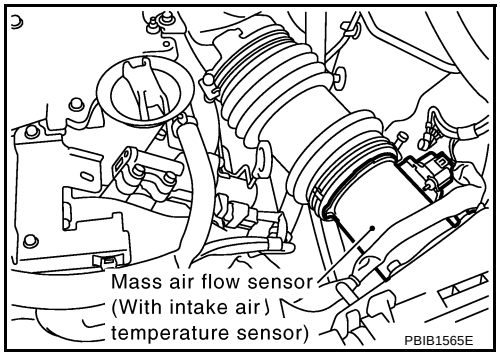

Yes or No

Yes >> Perform trouble diagnosis for DTC P0171or P0174. Refer to EC-248 .
No >> GO TO 3.

3. CHECK HO2S2 GROUND CIRCUIT FOR OPEN AND SHORT

1. Turn ignition switch OFF.
2. Disconnect heated oxygen sensor 2 harness connector.
3. Disconnect ECM harness connector.
4. Check harness continuity between HO2S2 terminal 4 and ECM terminal 78.
   Refer to Wiring Diagram.

   Continuity should exist.

5. Also check harness for short to ground and short to power.

OK or NG

OK >> GO TO 4.
NG >> Repair open circuit or short to ground or short to power in harness or connectors.

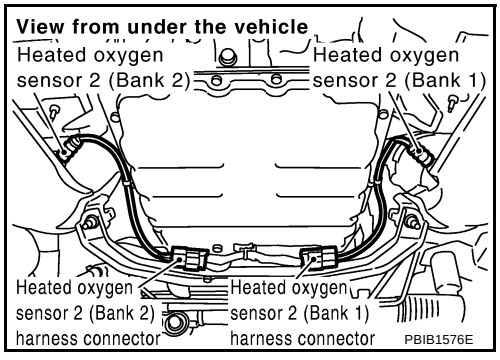

4. CHECK HO2S2 INPUT SIGNAL CIRCUIT FOR OPEN AND SHORT

1. Check harness continuity between ECM terminal and HO2S2 terminal as follows. Refer to Wiring Diagram.

DTC	Terminals		Bank
	ECM	Sensor	
P1147	74	1	1
P1167	55	1	2

Continuity should exist.

2. Check harness continuity between the following terminals and ground. Refer to Wiring Diagram.

DTC	Terminals		Bank
	ECM	Sensor	
P1147	74	1	1
P1167	55	1	2

Continuity should not exist.

3. Also check harness for short to ground and short to power.

OK or NG

OK >> GO TO 5.
NG >> Repair open circuit or short to ground or short to power in harness or connectors.

5. CHECK HEATED OXYGEN SENSOR 2

Refer to EC-461, "Component Inspection" .

OK or NG

OK >> GO TO 6.
NG >> Replace malfunctioning heated oxygen sensor 2.

6. CHECK INTERMITTENT INCIDENT

Refer to EC-163, "TROUBLE DIAGNOSIS FOR INTERMITTENT INCIDENT" .

>> **INSPECTION END**

Component Inspection

ABS006UU

HEATED OXYGEN SENSOR 2

With CONSULT-II

1. Turn ignition switch ON and select “DATA MONITOR” mode with CONSULT-II.
2. Start engine and warm it up to the normal operating temperature.
3. Turn ignition switch OFF and wait at least 10 seconds.
4. Start engine and keep the engine speed between 3,500 and 4,000 rpm for at least 1 minute under no load.
5. Let engine idle for 1 minute.

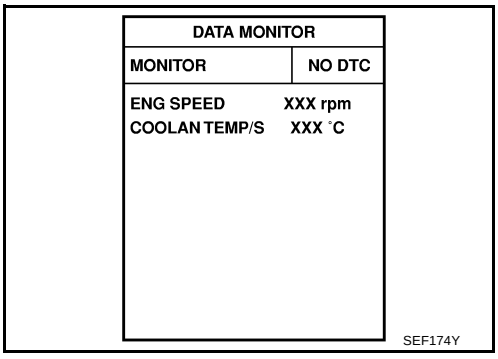

6. Select “FUEL INJECTION” in “ACTIVE TEST” mode, and select “HO2S2 (B1)/(B2)” as the monitor item with CONSULT-II.

ACTIVE TEST	
FUEL INJECTION	25 %
MONITOR	
ENG SPEED	XXX rpm
HO2S2 (B1)	XXX V
HO2S2 (B2)	XXX V

PBIB1672E

7. Check “HO2S2 (B1)/(B2)” at idle speed when adjusting “FUEL INJECTION” to ±25%.

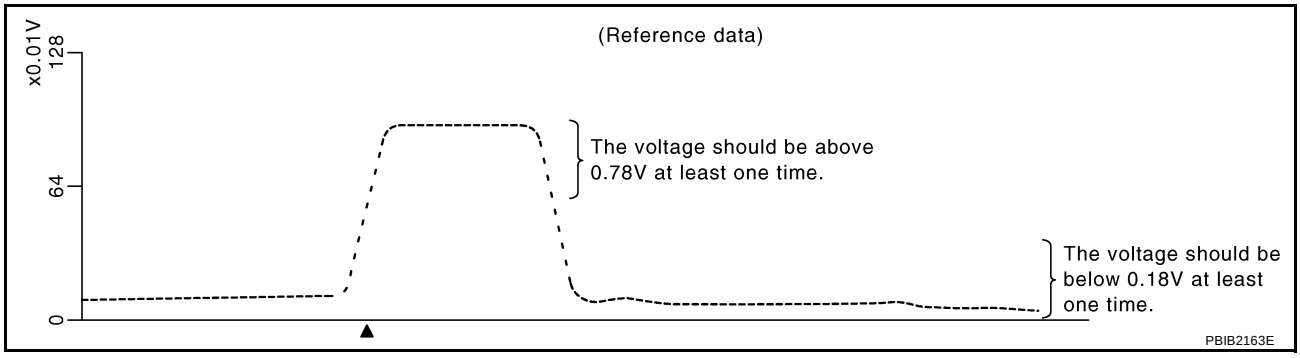

“HO2S2 (B1)/(B2)” should be above 0.78V at least once when the “FUEL INJECTION” is +25%.
“HO2S2 (B1)/(B2)” should be below 0.18V at least once when the “FUEL INJECTION” is –25%.

CAUTION:

- **Discard any heated oxygen sensor which has been dropped from a height of more than 0.5 m (19.7 in) onto a hard surface such as a concrete floor; use a new one.**
- **Before installing new oxygen sensor, clean exhaust system threads using Oxygen Sensor Thread Cleaner tool J-43897-18 or J-43897-12 and approved anti-seize lubricant.**

Without CONSULT-II

1. Start engine and warm it up to the normal operating temperature.
2. Turn ignition switch OFF and wait at least 10 seconds.
3. Start engine and keep the engine speed between 3,500 and 4,000 rpm for at least 1 minute under no load.
4. Let engine idle for 1 minute.
5. Set voltmeter probes between ECM terminal 74 [HO2S2 (B1) signal] or 55 [HO2S2 (B2) signal] and ground.
6. Check the voltage when revving up to 4,000 rpm under no load at least 10 times.
   (Depress and release accelerator pedal as soon as possible.)
   The voltage should be above 0.78V at least once during this procedure.
   If the voltage is above 0.78V at step 6, step 7 is not necessary.
7. Keep vehicle at idling for 10 minutes, then check voltage. Or check the voltage when coasting from 80 km/h (50 MPH) in D position with “OD” OFF.
   The voltage should be below 0.18V at least once during this procedure.

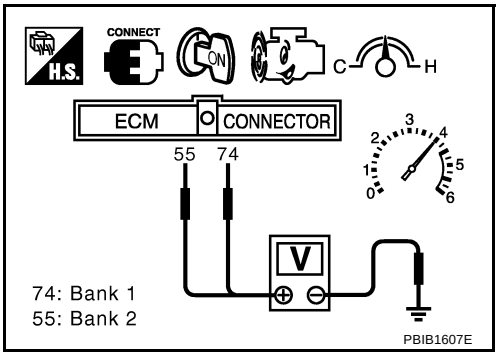

8. If NG, replace heated oxygen sensor 2.

CAUTION:

- **Discard any heated oxygen sensor which has been dropped from a height of more than 0.5 m (19.7 in) onto a hard surface such as a concrete floor; use a new one.**

- **Before installing new oxygen sensor, clean exhaust system threads using Oxygen Sensor Thread Cleaner tool J-43897-18 or J-43897-12 and approved anti-seize lubricant.**

Removal and Installation

ABS006UV

HEATED OXYGEN SENSOR 2

Refer to EM-26, "EXHAUST MANIFOLD AND THREE WAY CATALYST" .

DTC P1148, P1168 CLOSED LOOP CONTROL

PFP:22690

On Board Diagnosis Logic

ABS006UW

These self-diagnoses have the one trip detection logic.

DTC No.	Trouble diagnosis name	DTC detecting condition	Possible cause
P1148 1148 (Bank 1)	Closed loop control function	The closed loop control function for bank 1 does not operate even when vehicle is driving in the specified condition.	● Harness or connectors [The air fuel ratio (A/F) sensor 1 circuit is open or shorted.] ● Air fuel ratio (A/F) sensor 1 ● Air fuel ratio (A/F) sensor 1 heater
P1168 1168 (Bank 2)		The closed loop control function for bank 2 does not operate even when vehicle is driving in the specified condition.	

DTC P1148 or P1168 is displayed with another DTC for air fuel ratio (A/F) sensor 1.
Perform the trouble diagnosis for the corresponding DTC.

DTC P1211 TCS CONTROL UNIT

PFP:47850

Description

ABS006V0

The malfunction information related to TCS is transferred through the CAN communication line from “ABS actuator and electric unit (control unit)” to ECM.
Be sure to erase the malfunction information such as DTC not only for “ABS actuator and electric unit (control unit)” but also for ECM after TCS related repair.

On Board Diagnosis Logic

ABS006V1

Freeze frame data is not stored in the ECM for this self-diagnosis. The MIL will not light up for this self-diagnosis.

DTC No.	Trouble diagnosis name	DTC detecting condition	Possible cause
P1211 1211	TCS control unit	ECM receives a malfunction information from “ABS actuator and electric unit (Control unit)”.	● ABS actuator and electric unit (control unit) ● TCS related parts

DTC Confirmation Procedure

ABS006V2

TESTING CONDITION:
Before performing the following procedure, confirm that battery voltage is more than 10.5V at idle.

WITH CONSULT-II

1. Turn ignition switch ON.
2. Select “DATA MONITOR” mode with CONSULT-II.
3. Start engine and let it idle for at least 60 seconds.
4. If 1st trip DTC is detected, go to EC-465, "Diagnostic Procedure"
.

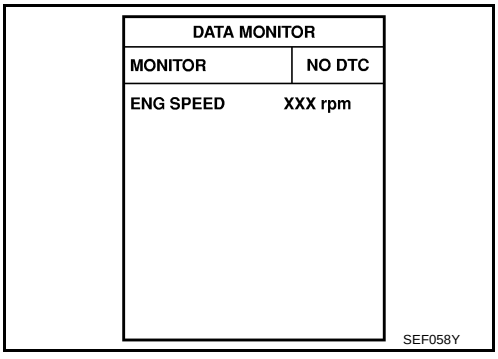

WITH GST

Follow the procedure “WITH CONSULT-II” above.

Diagnostic Procedure

ABS00E9C

Go to BRC-12, "TROUBLE DIAGNOSIS" .

DTC P1212 TCS COMMUNICATION LINE

PFP:47850

Description

ABS006V4

NOTE:
If DTC P1212 is displayed with DTC U1000 or U1001, first perform the trouble diagnosis for DTC U1000, U1001. Refer to EC-171 .
This CAN communication line is used to control the smooth engine operation during the TCS operation. Pulse signals are exchanged between ECM and “ABS actuator and electric unit (control unit)”.
Be sure to erase the malfunction information such as DTC not only for “ABS actuator and electric unit (control unit)” but also for ECM after TCS related repair.

On Board Diagnosis Logic

ABS006V5

Freeze frame data is not stored in the ECM for this self-diagnosis. The MIL will not light up for this self-diagnosis.

DTC No.	Trouble diagnosis name	DTC detecting condition	Possible cause
P1212 1212	TCS communication line	ECM can not receive the information from “ABS actuator and electric unit (control unit)”.	● Harness or connectors (The CAN communication line is open or shorted.) ● ABS actuator and electric unit (control unit) ● Dead (Weak) battery

DTC Confirmation Procedure

ABS006V6

TESTING CONDITION:
Before performing the following procedure, confirm that battery voltage is more than 10.5V at idle.

WITH CONSULT-II

1. Turn ignition switch ON.
2. Select “DATA MONITOR” mode with CONSULT-II.
3. Start engine and let it idle for at least 10 seconds.
4. If a 1st trip DTC is detected, go to EC-466, "Diagnostic Procedure" .

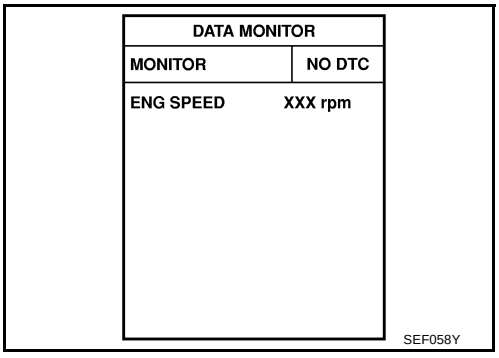

WITH GST

Follow the procedure “WITH CONSULT-II” above.

Diagnostic Procedure

ABS00E9D

Go to BRC-12, "TROUBLE DIAGNOSIS" .

DTC P1217 ENGINE OVER TEMPERATURE

PFP:00000

Description

ABS00B4M

SYSTEM DESCRIPTION

NOTE:
If DTC P1217 is displayed with DTC U1000 or U1001, first perform the trouble diagnosis for DTC U1000, U1001. Refer to EC-171 .

Cooling Fan Control

Sensor	Input Signal to ECM	ECM function	Actuator
Crankshaft position sensor (POS) Camshaft position sensor (PHASE)	Engine speed*1	Cooling fan control	IPDM E/R (Cooling fan relay)
Battery	Battery voltage*1		
Wheel sensor*2	Vehicle speed		
Engine coolant temperature sensor	Engine coolant temperature		
Air conditioner switch*2	Air conditioner ON signal		
Refrigerant pressure sensor	Refrigerant pressure		

*1: The ECM determines the start signal status by the signals of engine speed and battery voltage.
*2: This signal is sent to ECM through CAN communication line.

The ECM controls the cooling fan corresponding to the vehicle speed, engine coolant temperature, refrigerant pressure, and air conditioner ON signal. The control system has 4-step control [HIGH/MIDDLE/LOW/OFF].

Cooling Fan Operation

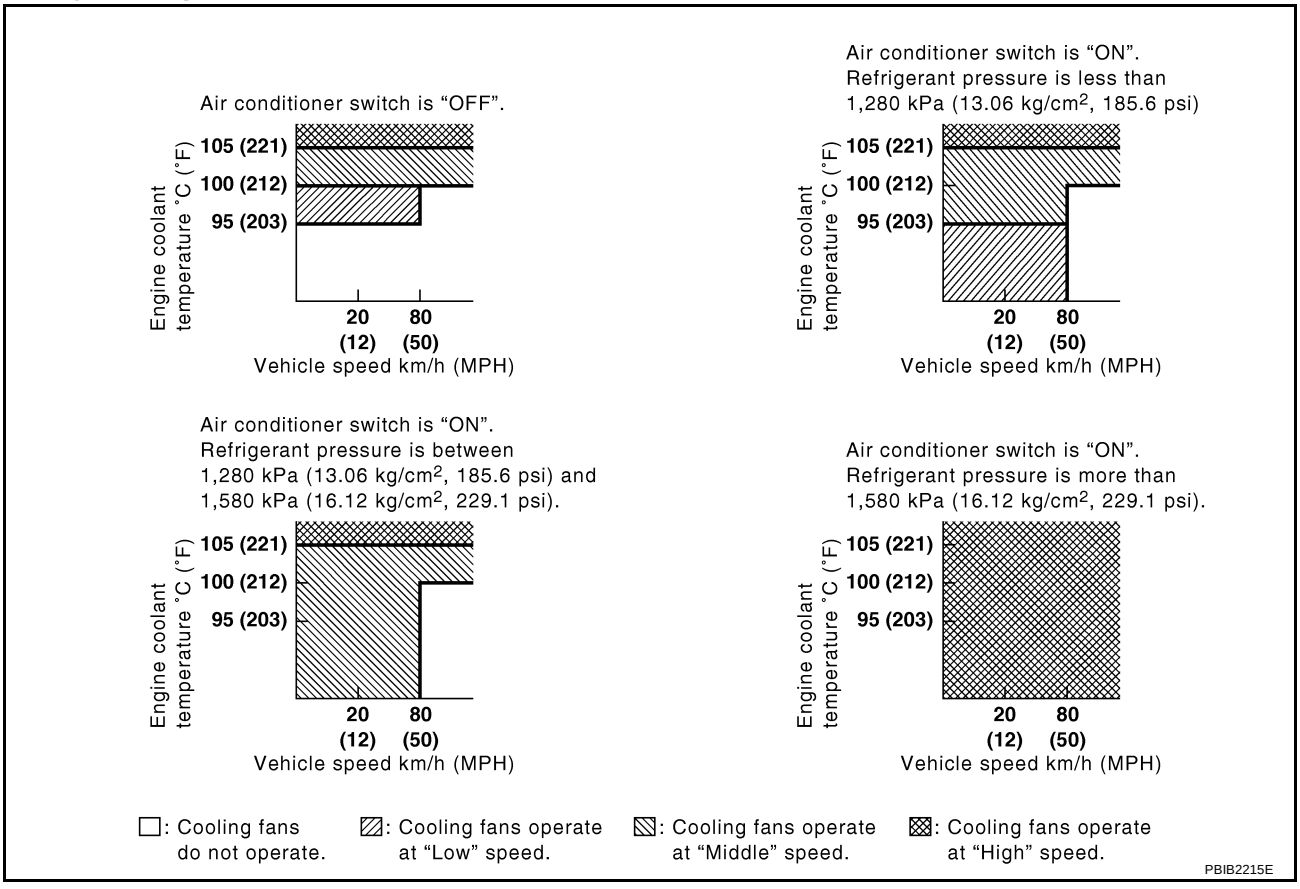

Cooling Fan Relay Operation

The ECM controls cooling fan relays in the IPDM E/R through CAN communication line.

Cooling fan speed	Cooling fan relay		
	1	2	3
Stop (OFF)	OFF	OFF	OFF
Low (LOW)	OFF	ON	OFF
Middle (MID)	OFF	OFF	ON
High (HI)	ON	OFF	ON

COMPONENT DESCRIPTION

Cooling Fan Motor

The cooling fan operates at each speed when the current flows in the cooling fan motor as follows.

Cooling fan speed	Cooling fan motor terminals	
	(+)	(–)
Middle (MID)	1	3 and 4
	2	3 and 4
	1 and 2	3
	1 and 2	4
High (HI)	1 and 2	3 and 4

The cooling fan operates at low (LOW) speed when cooling fan motors-1 and -2 are circuited in series under middle speed condition.

CONSULT-II Reference Value in Data Monitor Mode

ABS006V9

Specification data are reference values.

MONITOR ITEM	CONDITION		SPECIFICATION
AIR COND SIG	● Engine: After warming up, idle the engine	Air conditioner switch: OFF	OFF
		Air conditioner switch: ON (Compressor operates.)	ON
COOLING FAN	● Engine: After warming up, idle the engine ● Air conditioner switch: OFF	Engine coolant temperature is 94°C (201°F) or less	OFF
		Engine coolant temperature is between 95°C (203°F) and 99°C (210°F)	LOW
		Engine coolant temperature is between 100°C (212°F) and 104°C (219°F)	MID
		Engine coolant temperature is 105°C (221°F) or more	HI

On Board Diagnosis Logic

ABS006VA

If the cooling fan or another component in the cooling system malfunctions, engine coolant temperature will rise.
When the engine coolant temperature reaches an abnormally high temperature condition, a malfunction is indicated.
This self-diagnosis has the one trip detection logic.

DTC No.	Trouble diagnosis name	DTC detecting condition	Possible cause
P1217 1217	Engine over temperature (Overheat)	● Cooling fan does not operate properly (Overheat). ● Cooling fan system does not operate properly (Overheat). ● Engine coolant level was not added to the system using the proper filling method. ● Engine coolant is not within the specified range.	● Harness or connectors (The cooling fan circuit is open or shorted.) ● IPDM E/R ● Cooling fan ● Radiator hose ● Radiator ● Radiator cap ● Water pump ● Thermostat For more information, refer to EC-478, "Main 12 Causes of Overheating" .

CAUTION:
When a malfunction is indicated, be sure to replace the coolant. Refer to CO-11, "Changing Engine Coolant" . Also, replace the engine oil. Refer to LU-9, "Changing Engine Oil" .

1. **Fill radiator with coolant up to specified level with a filling speed of 2 liters per minute. Be sure to use coolant with the proper mixture ratio. Refer to MA-13, "Anti-Freeze Coolant Mixture Ratio" .**
2. **After refilling coolant, run engine to ensure that no water-flow noise is emitted.**

Overall Function Check

ABS006VB

Use this procedure to check the overall function of the cooling fan. During this check, a DTC might not be confirmed.

WARNING:
Never remove the radiator cap when the engine is hot. Serious burns could be caused by high pressure fluid escaping from the radiator.
Wrap a thick cloth around cap. Carefully remove the cap by turning it a quarter turn to allow built-up pressure to escape. Then turn the cap all the way off.

WITH CONSULT-II

1. Check the coolant level in the reservoir tank and radiator.
   Allow engine to cool before checking coolant level.
   If the coolant level in the reservoir tank and/or radiator is below the proper range, skip the following steps and go to EC-473, "PROCEDURE A" .
2. Confirm whether customer filled the coolant or not. If customer filled the coolant, skip the following steps and go to EC-473, "PROCEDURE A" .
3. Turn ignition switch ON.

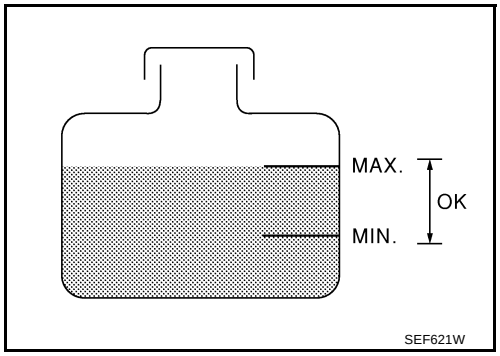

4. Perform “COOLING FAN” in “ACTIVE TEST” mode with CONSULT-II.
5. If the results are NG, go to EC-473, "PROCEDURE A" .

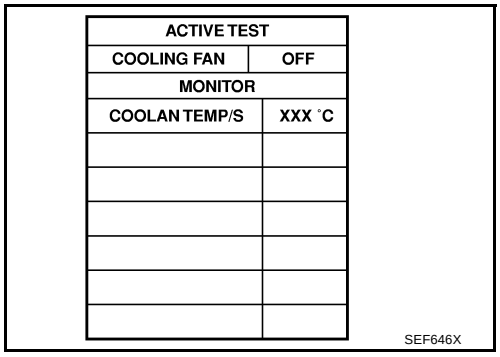

ACTIVE TEST	
COOLING FAN	OFF
MONITOR	
COOLAN TEMP/S	XXX °C

SEF646X

WITH GST

1. Check the coolant level in the reservoir tank and radiator.
   Allow engine to cool before checking coolant level.
   If the coolant level in the reservoir tank and/or radiator is below the proper range, skip the following steps and go to EC-473, "PROCEDURE A" .
2. Confirm whether customer filled the coolant or not. If customer filled the coolant, skip the following steps and go to EC-473, "PROCEDURE A" .
3. Perform IPDM E/R auto active test and check cooling fan motors operation, refer to PG-24, "Auto Active Test"
4. If NG, go to EC-473, "PROCEDURE A" .

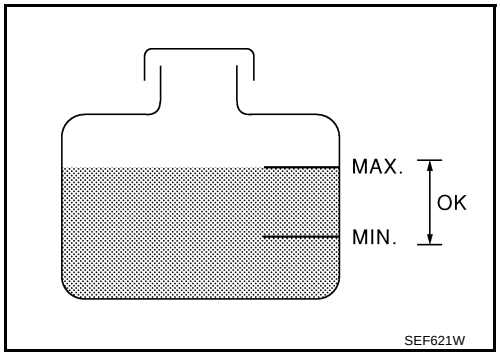

Wiring Diagram

ABS006VC

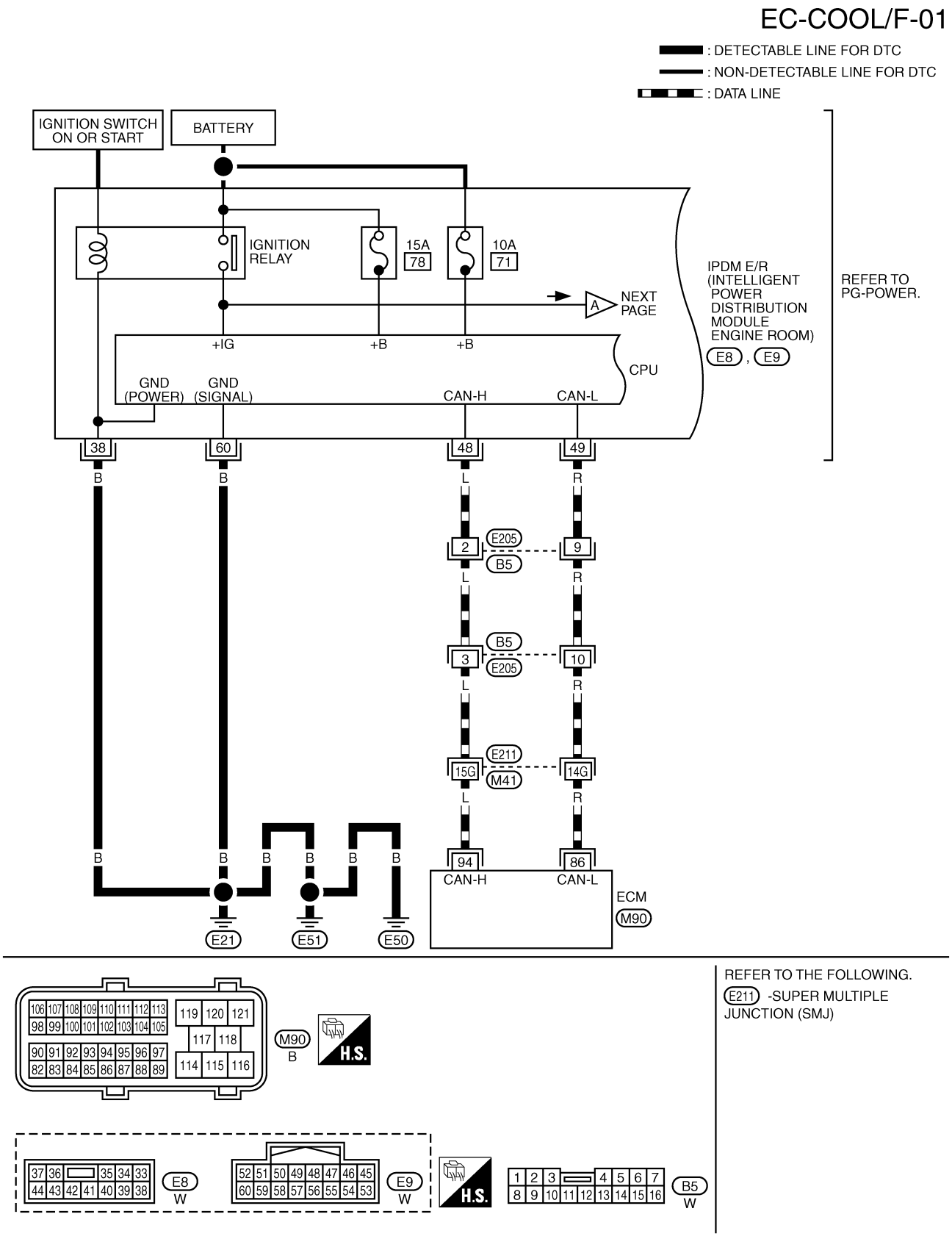

TBWM0306E

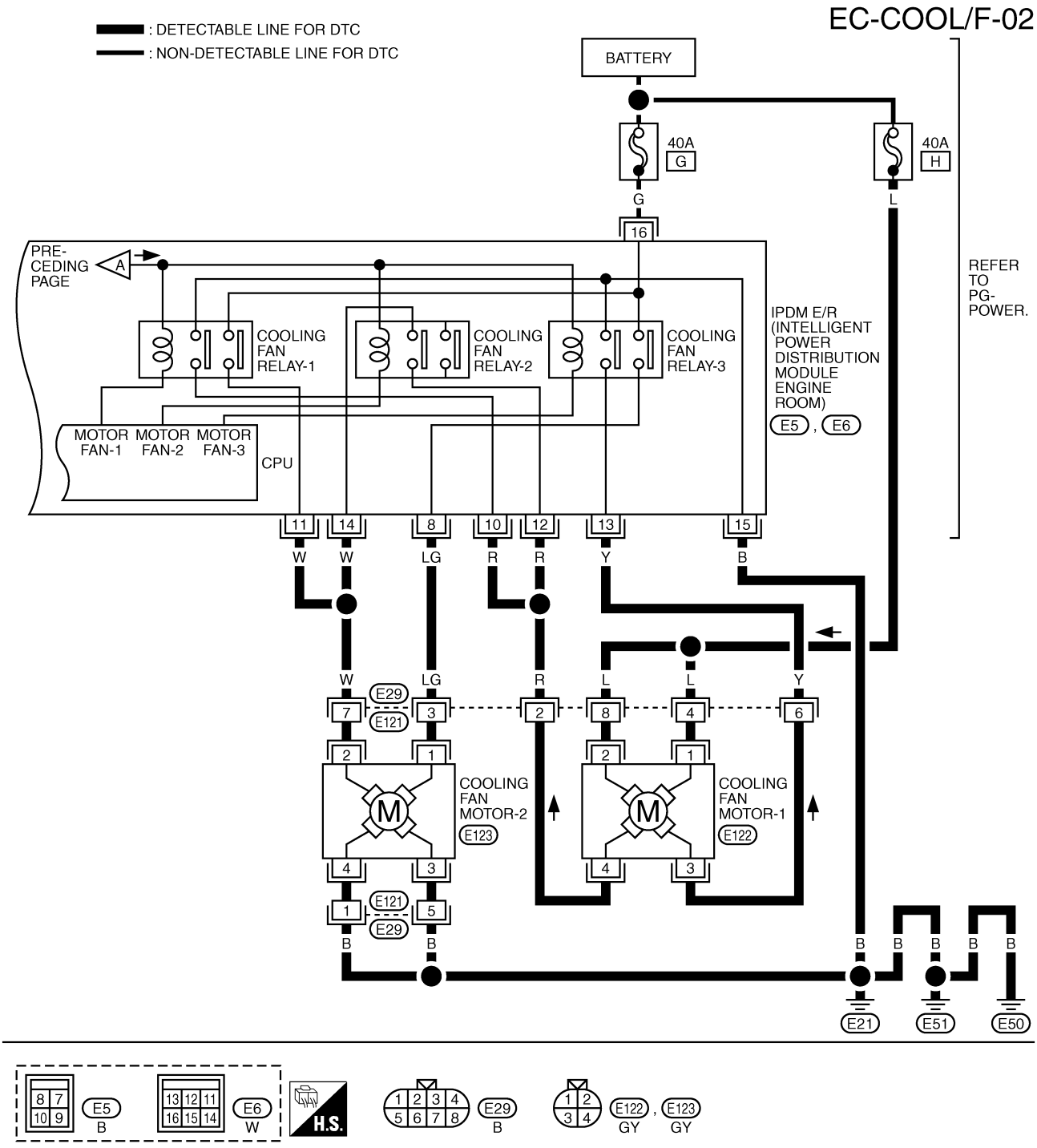
EC-COOL/F-02
: DETECTABLE LINE FOR DTC
: NON-DETECTABLE LINE FOR DTC
BATTERY
40A
G
40A
H
G
L
16
PRE-
CEDING
PAGE
A
COOLING
FAN
RELAY-1
COOLING
FAN
RELAY-2
COOLING
FAN
RELAY-3
IPDM E/R
(INTELLIGENT
POWER
DISTRIBUTION
MODULE
ENGINE
ROOM)
E5 , E6
REFER
TO
PG-
POWER.
MOTOR
FAN-1
MOTOR
FAN-2
MOTOR
FAN-3
CPU
11
14
8
10
12
13
15
W
W
LG
R
R
Y
B
W
LG
R
L
L
Y
E29
E121
7
3
2
8
4
6
2
1
2
1
M
COOLING
FAN
MOTOR-2
E123
M
COOLING
FAN
MOTOR-1
E122
4
3
4
3
1
5
E121
E29
B
B
B
B
B
B
B
B
E21
E51
E50
E5
B
E6
W
H.S.
E29
B
E122 , E123
GY
GY

TBWM0307E

Diagnostic Procedure

ABS006VD

PROCEDURE A

1. INSPECTION START

Do you have CONSULT-II?

Yes or No

Yes >> GO TO 2.
No >> GO TO 3.

2. CHECK COOLING FAN OPERATION

With CONSULT-II

1. Start engine and let it idle.
2. Select “COOLING FAN” in “ACTIVE TEST” mode with CONSULT-II.
3. Make sure that cooling fans-1 and -2 operate at each speed (LOW/MID/HI).

OK or NG

OK >> GO TO 4.
NG >> Check cooling fan control circuit. (Go to EC-475, "PROCEDURE B" .)

ACTIVE TEST	
COOLING FAN	LOW
MONITOR	
COOLAN TEMP/S	XXX ˚C

SEF784Z

3. CHECK COOLING FAN OPERATION

Without CONSULT-II

1. Perform IPDM E/R auto active test and check cooling fan motors operation, refer to PG-24, "Auto Active Test" .
2. Make sure that cooling fans-1 and -2 operate at each speed (Low/Middle/High).

OK or NG

OK >> GO TO 4.
NG >> Check cooling fan control circuit. (Go to EC-475, "PROCEDURE B" .)

4. CHECK COOLING SYSTEM FOR LEAK

Apply pressure to the cooling system with a tester, and check if the pressure drops.

Testing pressure: 157 kPa (1.6 kg/cm^2 , 23 psi)

CAUTION:
Higher than the specified pressure may cause radiator damage. Pressure should not drop.

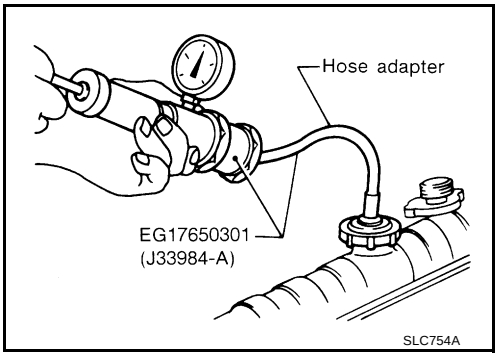

OK or NG

OK >> GO TO 5.
NG >> Check the following for leak. Refer to CO-11, "LEVEL CHECK" .

- Hose
- Radiator
- Water pump

5. CHECK RADIATOR CAP

Apply pressure to cap with a tester.

Radiator cap relief pressure: **59 - 98 kPa (0.6 - 1.0 kg/cm^2, 9 - 14 psi)**

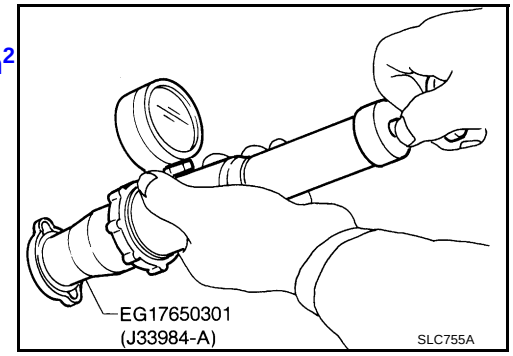

OK or NG

OK >> GO TO 6.
NG >> Replace radiator cap.

6. CHECK THERMOSTAT

1. Check valve seating condition at normal room temperatures.
   It should seat tightly.
2. Check valve opening temperature and valve lift.

   Valve opening temperature: **76.5°C (170°F) [standard]**
   Valve lift: **More than 8.6 mm/90°C (0.339 in/194°F)**

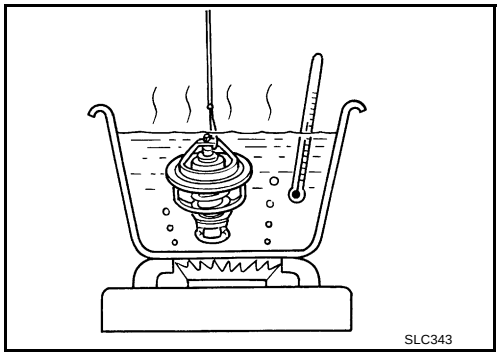

3. Check if valve is closed at 5°C (9°F) below valve opening temperature.
   For details, refer to CO-26, "WATER INLET AND THERMOSTAT ASSEMBLY" .

OK or NG

OK >> GO TO 7.
NG >> Replace thermostat

7. CHECK ENGINE COOLANT TEMPERATURE SENSOR

Refer to EC-212, "Component Inspection" .

OK or NG

OK >> GO TO 8.
NG >> Replace engine coolant temperature sensor.

8. CHECK MAIN 12 CAUSES

If the cause cannot be isolated, go to EC-478, "Main 12 Causes of Overheating" .

>> **INSPECTION END**

PROCEDURE B

1. CHECK COOLILNG FAN POWER SUPPLY CIRCUIT

1. Turn ignition switch OFF.
2. Disconnect IPDM E/R harness connectors E6.
3. Check voltage between IPDM E/R terminal 16 and ground with CONSULT-II or tester.

Voltage: Battery voltage

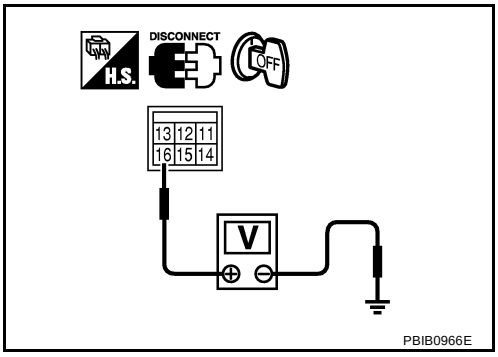

OK or NG

OK >> GO TO 3.
NG >> GO TO 2.

2. DETECT MALFUNCTIONING PART

Check the following.

- 40A fusible link
- Harness for open or short between IPDM E/R and battery

>> Repair open circuit or short to ground or short to power in harness or connectors.

3. CHECK COOLING FAN GROUND CIRCUIT

1. Turn ignition switch OFF.
2. Check harness continuity between IPDM E/R terminal 15, 38, 60 and ground. Refer to Wiring Diagram.

Continuity should exist.

3. Also check harness for short to power.

OK or NG

OK >> GO TO 4.
NG >> Repair open circuit or short to power in harness or connectors.

4. CHECK COOLING FAN MOTOR-1 CIRCUIT-I

1. Disconnect cooling fan motor-1 harness connector.

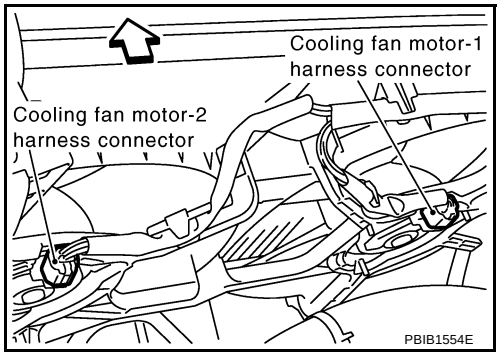

2. Check voltage between cooling fan motor-1 terminals 1, 2 and ground with CONSULT-II or tester.

Voltage: Battery voltage

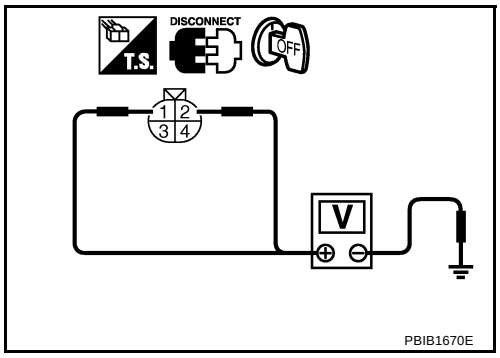

OK or NG

OK >> GO TO 6.
NG >> GO TO 5.

5. DETECT MALFUNCTIONING PART

Check the following.

- 40A fusible link
- Harness connectors E29, E121
- Harness for open or short between cooling fan motor-1 and battery

>> Repair open circuit or short to ground or short to power in harness or connectors.

6. CHECK COOLING FAN MOTOR-1 CIRCUIT-II

1. Check harness continuity between cooling fan motor-1 terminal 3 and IPDM E/R terminal 13, cooling fan motor-1 terminal 4 and IPDM E/R terminals 10, 12.
   Refer to Wiring diagram.

Continuity should exist.

2. Also check harness for short to ground and short to power.

OK or NG

OK >> GO TO 8.
NG >> GO TO 7.

7. DETECT MALFUNCTIONING PART

Check the following.

- Harness connectors E29, E121
- Harness for open or short between cooling fan motor-1 and IPDM E/R

>> Repair open circuit or short to ground or short to power in harness or connectors.

8. CHECK COOLING FAN MOTOR-2 CIRCUIT-I

1. Disconnect cooling fan motor-2 harness connector.
2. Check harness continuity between cooling fan motor-2 terminals 3, 4 and ground.
   Refer to Wiring diagram.

   Continuity should exist.

3. Also check harness short to power.

OK or NG

OK >> GO TO 10.
NG >> GO TO 9.

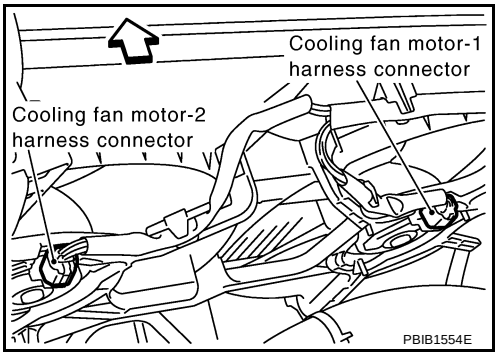

9. DETECT MALFUNCTIONING PART

Check the following.

- Harness connectors E29, E121
- Harness for open or short between cooling fan motor-2 and ground

>> Repair open circuit or short to power in harness or connectors.

10. CHECK COOLING FAN MOTOR-2 CIRCUIT-II

1. Check harness continuity between cooling fan motor-2 terminal 1 and IPDM E/R terminal 8, cooling fan motor-2 terminal 2 and IPDM E/R terminals 11, 14.
   Refer to Wiring Diagram.

   Continuity should exist.

2. Also check harness for short to ground and short to power.

OK or NG

OK >> GO TO 12.
NG >> GO TO 11.

11. DETECT MALFUNCTIONING PART

Check the following.

- Harness connectors E29, E121
- Harness for open or short between cooling fan motor-2 and IPDM E/R

>> Repair open circuit or short to ground or short to power in harness or connectors.

12. CHECK COOLING FAN MOTORS

Refer to EC-478, "Component Inspection" .

OK or NG

OK >> GO TO 13.
NG >> Replace cooling fan motors.

13. CHECK INTERMITTENT INCIDENT

Perform EC-163, "TROUBLE DIAGNOSIS FOR INTERMITTENT INCIDENT" .

OK or NG

OK >> Replace IPDM E/R. Refer to PG-18, "IPDM E/R (INTELLIGENT POWER DISTRIBUTION MODULE ENGINE ROOM)" .
NG >> Repair or replace harness or connector.

Main 12 Causes of Overheating

ABS006VE

Engine	Step	Inspection item	Equipment	Standard	Reference page
OFF	1	● Blocked radiator ● Blocked condenser ● Blocked radiator grille ● Blocked bumper	● Visual	No blocking	—
	2	● Coolant mixture	● Coolant tester	50 - 50% coolant mixture	MA-13
	3	● Coolant level	● Visual	Coolant up to MAX level in reservoir tank and radiator filler neck	CO-11
	4	● Radiator cap	● Pressure tester	59 - 98 kPa (0.6 - 1.0 kg/cm^2 , 9 - 14 psi) (Limit)	CO-15
ON*2	5	● Coolant leaks	● Visual	No leaks	CO-11
ON*2	6	● Thermostat	● Touch the upper and lower radiator hoses	Both hoses should be hot	CO-26
ON*1	7	● Cooling fan	● CONSULT-II	Operating	See trouble diagnosis for DTC P1217 (EC-467).
OFF	8	● Combustion gas leak	● Color checker chemical tester 4 Gas analyzer	Negative	—
ON*3	9	● Coolant temperature gauge	● Visual	Gauge less than 3/4 when driving	—
		● Coolant overflow to reservoir tank	● Visual	No overflow during driving and idling	CO-11
OFF*4	10	● Coolant return from reservoir tank to radiator	● Visual	Should be initial level in reservoir tank	CO-11
OFF	11	● Cylinder head	● Straight gauge feeler gauge	0.1 mm (0.004 in) Maximum distortion (warping)	EM-102
	12	● Cylinder block and pistons	● Visual	No scuffing on cylinder walls or piston	EM-122

*1: Turn the ignition switch ON.
*2: Engine running at 3,000 rpm for 10 minutes.
*3: Drive at 90 km/h (55 MPH) for 30 minutes and then let idle for 10 minutes.
*4: After 60 minutes of cool down time.
For more information, refer to CO-7, "OVERHEATING CAUSE ANALYSIS" .

Component Inspection

ABS006VF

COOLING FAN MOTORS-1 AND -2

1. Disconnect cooling fan motor harness connectors.
2. Supply cooling fan motor terminals with battery voltage and check operation.

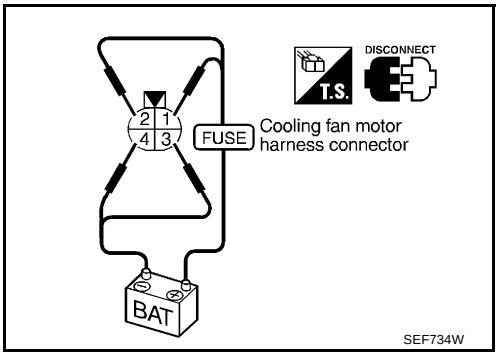

Cooling fan speed	Cooling fan motor terminals	
	(+)	(–)
Middle (MID)	1	3 and 4
	2	3 and 4
	1 and 2	3
	1 and 2	4
High (HI)	1 and 2	3 and 4

Cooling fan motor should operate.
If NG, replace cooling fan motor.

DTC P1225 TP SENSOR

PFP:16119

Component Description

ABS006VG

Electric throttle control actuator consists of throttle control motor, throttle position sensor, etc. The throttle position sensor responds to the throttle valve movement.
The throttle position sensor has two sensors. These sensors are a kind of potentiometers which transform the throttle valve position into output voltage, and emit the voltage signal to the ECM. In addition, these sensors detect the opening and closing speed of the throttle valve and feed the voltage signals to the ECM. The ECM judges the current opening angle of the throttle valve from these signals and the ECM controls the throttle control motor to make the throttle valve opening angle properly in response to driving condition.

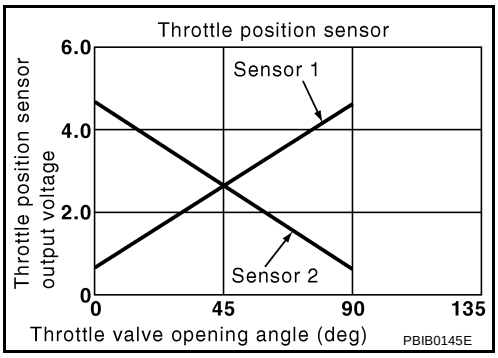

On Board Diagnosis Logic

ABS006VH

The MIL will not light up for this diagnosis.

DTC No.	Trouble diagnosis name	DTC detecting condition	Possible cause
P1225 1225	Closed throttle position learning performance problem	Closed throttle position learning value is excessively low.	● Electric throttle control actuator (TP sensor 1 and 2)

DTC Confirmation Procedure

ABS006VI

NOTE:
If DTC Confirmation Procedure has been previously conducted, always turn ignition switch OFF and wait at least 10 seconds before conducting the next test.
TESTING CONDITION:
Before performing the following procedure, confirm that battery voltage is more than 10V at idle.

WITH CONSULT-II

1. Turn ignition switch ON.
2. Select “DATA MONITOR” mode with CONSULT-II.
3. Turn ignition switch OFF, wait at least 10 seconds.
4. Turn ignition switch ON.
5. If 1st trip DTC is detected, go to EC-480, "Diagnostic Procedure"
.

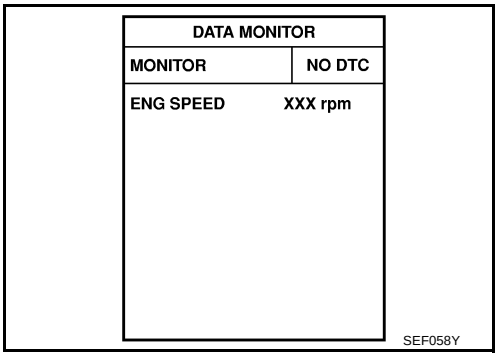

WITH GST

Follow the procedure “WITH CONSULT-II” above.

Diagnostic Procedure

ABS006VJ

1. CHECK ELECTRIC THROTTLE CONTROL ACTUATOR VISUALLY

1. Turn ignition switch OFF.
2. Remove the intake air duct.
3. Check if foreign matter is caught between the throttle valve and the housing.

OK or NG

OK >> GO TO 2.
NG >> Remove the foreign matter and clean the electric throttle control actuator inside.

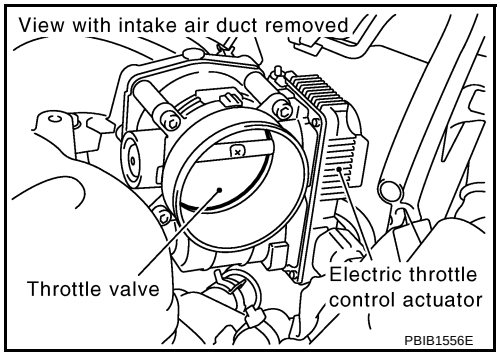

2. REPLACE ELECTRIC THROTTLE CONTROL ACTUATOR

1. Replace the electric throttle control actuator.
2. Perform EC-96, "Throttle Valve Closed Position Learning" .
3. Perform EC-97, "Idle Air Volume Learning" .

>> **INSPECTION END**

Removal and Installation

ABS006VK

ELECTRIC THROTTLE CONTROL ACTUATOR

Refer to EM-19, "INTAKE MANIFOLD COLLECTOR" .

DTC P1226 TP SENSOR

PFP:16119

Component Description

ABS006VL

Electric throttle control actuator consists of throttle control motor, throttle position sensor, etc. The throttle position sensor responds to the throttle valve movement.
The throttle position sensor has two sensors. These sensors are a kind of potentiometers which transform the throttle valve position into output voltage, and emit the voltage signal to the ECM. In addition, these sensors detect the opening and closing speed of the throttle valve and feed the voltage signals to the ECM. The ECM judges the current opening angle of the throttle valve from these signals and the ECM controls the throttle control motor to make the throttle valve opening angle properly in response to driving condition.

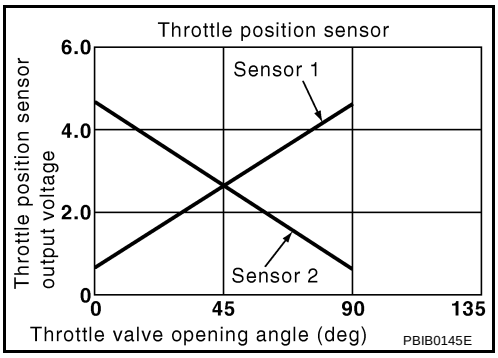

On Board Diagnosis Logic

ABS006VM

The MIL will not light up for this diagnosis.

DTC No.	Trouble diagnosis name	DTC detecting condition	Possible cause
P1226 1226	Closed throttle position learning performance problem	Closed throttle position learning is not performed successfully, repeatedly.	● Electric throttle control actuator (TP sensor 1 and 2)

DTC Confirmation Procedure

ABS006VN

NOTE:
If DTC Confirmation Procedure has been previously conducted, always turn ignition switch OFF and wait at least 10 seconds before conducting the next test.
TESTING CONDITION:
Before performing the following procedure, confirm that battery voltage is more than 10V at idle.

WITH CONSULT-II

1. Turn ignition switch ON.
2. Select “DATA MONITOR” mode with CONSULT-II.
3. Turn ignition switch OFF, wait at least 10 seconds.
4. Turn ignition switch ON.
5. Repeat steps 3 and 4 for 32 times.
6. If 1st trip DTC is detected, go to EC-482, "Diagnostic Procedure"
.

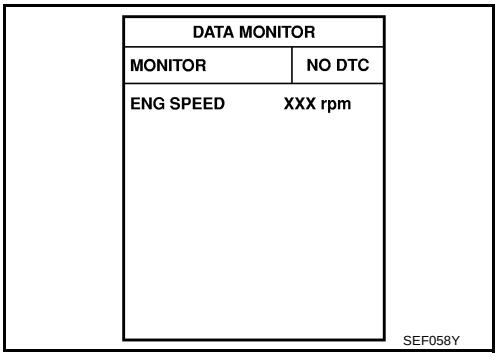

WITH GST

Follow the procedure “WITH CONSULT-II” above.

Diagnostic Procedure

ABS006VO

1. CHECK ELECTRIC THROTTLE CONTROL ACTUATOR VISUALLY

1. Turn ignition switch OFF.
2. Remove the intake air duct.
3. Check if foreign matter is caught between the throttle valve and the housing.

OK or NG

OK >> GO TO 2.
NG >> Remove the foreign matter and clean the electric throttle control actuator inside.

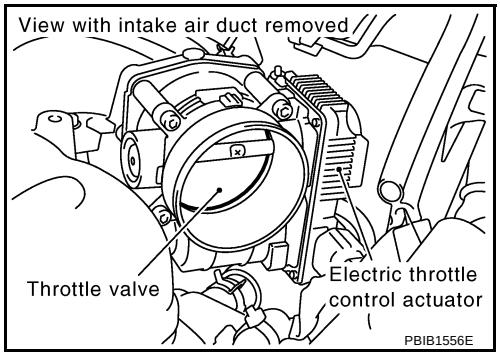

2. REPLACE ELECTRIC THROTTLE CONTROL ACTUATOR

1. Replace the electric throttle control actuator.
2. Perform EC-96, "Throttle Valve Closed Position Learning" .
3. Perform EC-97, "Idle Air Volume Learning" .

>> **INSPECTION END**

Removal and Installation

ABS006VP

ELECTRIC THROTTLE CONTROL ACTUATOR

Refer to EM-19, "INTAKE MANIFOLD COLLECTOR" .

DTC P1229 SENSOR POWER SUPPLY

PFP:16119

On Board Diagnosis Logic

ABS006VQ

This self-diagnosis has the one trip detection logic.

DTC No.	Trouble diagnosis name	DTC detecting condition	Possible cause
P1229 1229	Sensor power supply circuit short	ECM detects a voltage of power source for sensor is excessively low or high.	● Harness or connectors (APP sensor 1 circuit is shorted.) (PSP sensor circuit is shorted.) (Refrigerant pressure sensor circuit is shorted.) (EVAP control system pressure sensor circuit is shorted.) ● Accelerator pedal position sensor (APP sensor 1) ● EVAP control system pressure sensor ● Power steering pressure sensor ● Refrigerant pressure sensor

FAIL-SAFE MODE

When the malfunction is detected, ECM enters fail-safe mode and the MIL lights up.

Engine operation condition in fail-safe mode
ECM stops the electric throttle control actuator control, throttle valve is maintained at a fixed opening (approx. 5 degrees) by the return spring.

DTC Confirmation Procedure

ABS006VR

NOTE:
If DTC Confirmation Procedure has been previously conducted, always turn ignition switch OFF and wait at least 10 seconds before conducting the next test.
TESTING CONDITION:
Before performing the following procedure, confirm that battery voltage is more than 10V at idle.

WITH CONSULT-II

1. Turn ignition switch ON.
2. Select “DATA MONITOR” mode with CONSULT-II.
3. Start engine and let it idle for 1 second.
4. If DTC is detected, go to EC-485, "Diagnostic Procedure" .

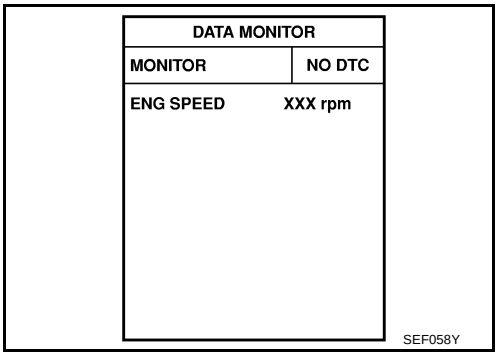

WITH GST

Follow the procedure “WITH CONSULT-II” above.

Wiring Diagram

ABS006VS

EC-SEN/PW-01

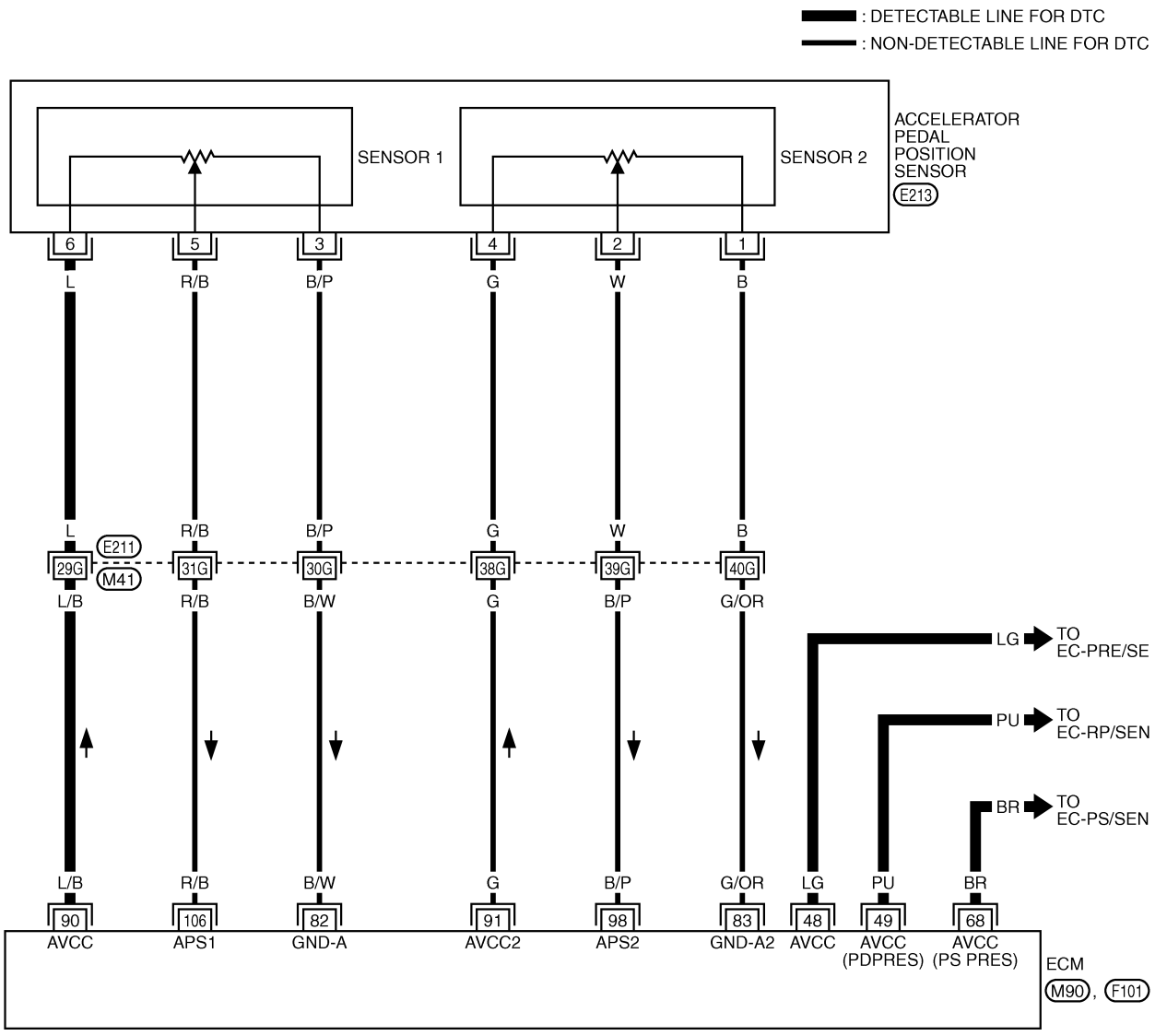

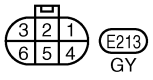

REFER TO THE FOLLOWING.
E211 -SUPER MULTIPLE JUNCTION (SMJ)

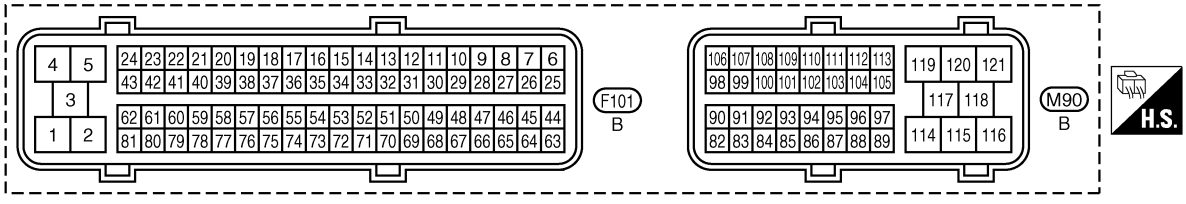

TBWM0402E

Specification data are reference values and are measured between each terminal and ground.

CAUTION:
Do not use ECM ground terminals when measuring input/output voltage. Doing so may result in damage to the ECM's transistor. Use a ground other than ECM terminals, such as the ground.

TERMINAL NO.	WIRE COLOR	ITEM	CONDITION	DATA (DC Voltage)
48	LG	Sensor power supply (EVAP control system pressure sensor)	**[Ignition switch: ON]**	Approximately 5V
49	PU	Sensor power supply (Refrigerant pressure sensor)	**[Ignition switch: ON]**	Approximately 5V
68	BR	Sensor power supply (Power steering pressure sensor)	**[Ignition switch: ON]**	Approximately 5V
90	L/B	Sensor power supply (APP sensor 1)	**[Ignition switch: ON]**	Approximately 5V

Diagnostic Procedure

ABS006VT

1. CHECK GROUND CONNECTIONS

1. Turn ignition switch OFF.
2. Loosen and retighten ground three screws on the body. Refer to EC-170, "Ground Inspection" .

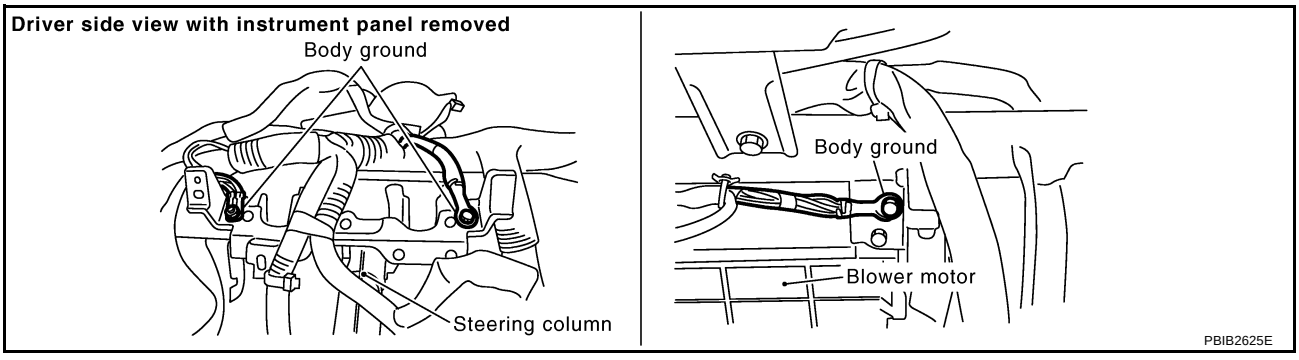

OK or NG

OK >> GO TO 2.
NG >> Repair or replace ground connections.

2. CHECK ACCELERATOR PEDAL POSITION SENSOR 1 POWER SUPPLY CIRCUIT

1. Disconnect accelerator pedal position (APP) sensor harness connector.
2. Turn ignition switch ON.

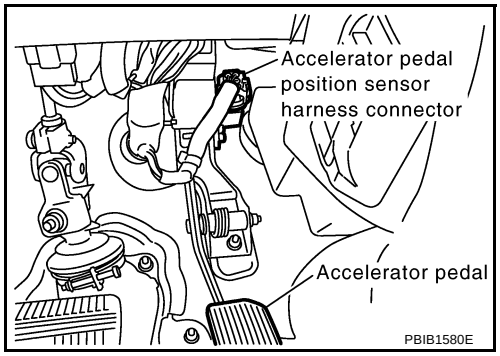

3. Check voltage between APP sensor terminal 6 and ground with CONSULT-II or tester.

Voltage: Approximately 5V

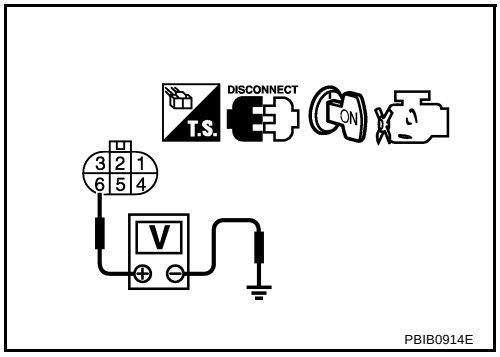

OK or NG

OK >> GO TO 5.
NG >> GO TO 3.

3. CHECK SENSOR POWER SUPPLY CIRCUITS

Check the following.

- Harness for short to power and short to ground, between the following terminals.

ECM terminal	Sensor terminal	Reference Wiring Diagram
90	APP sensor terminal 6	EC-621
49	Refrigerant pressure sensor terminal 1	EC-675
68	PSP sensor terminal 1	EC-398
48	EVAP control system pressure sensor terminal 3	EC-355

- ECM pin terminal.

OK or NG

OK >> GO TO 4.
NG >> Repair short to ground or short to power in harness or connectors.

4. CHECK COMPONENTS

Check the following.

- Refrigerant pressure sensor (Refer to ATC-90, "COMPONENT INSPECTION" .)
- Power steering pressure sensor (Refer to EC-401, "Component Inspection" .)
- EVAP control system pressure sensor (Refer to EC-352, "Component Inspection" .)

OK or NG

OK >> GO TO 7.
NG >> Replace malfunctioning component.

5. CHECK APP SENSOR

Refer to EC-624, "Component Inspection" .

OK or NG

OK >> GO TO 7.
NG >> GO TO 6.

6. REPLACE ACCELERATOR PEDAL ASSEMBLY

1. Replace accelerator pedal assembly.
2. Perform EC-96, "Accelerator Pedal Released Position Learning" .
3. Perform EC-96, "Throttle Valve Closed Position Learning" .
4. Perform EC-97, "Idle Air Volume Learning" .

>> **INSPECTION END**

7. CHECK INTERMITTENT INCIDENT

Refer to EC-163, "TROUBLE DIAGNOSIS FOR INTERMITTENT INCIDENT" .

>> **INSPECTION END**

DTC P1271, P1281 A/F SENSOR 1

PFP:22693

Component Description

ABS00A9T

The air fuel ratio (A/F) sensor is a planar dual-cell limit current sensor. The sensor element of the air fuel ratio (A/F) sensor is the combination of a Nernst concentration cell (sensor cell) with an oxygen-pump cell, which transports ions. It has a heater in the element.

The sensor is capable of precise measurement $\lambda = 1$, but also in the lean and rich range. Together with its control electronics, the sensor outputs a clear, continuous signal throughout a wide λ range ($0.7 < \lambda <$ air).

The exhaust gas components diffuse through the diffusion gap at the electrode of the oxygen pump and Nernst concentration cell, where they are brought to thermodynamic balance.

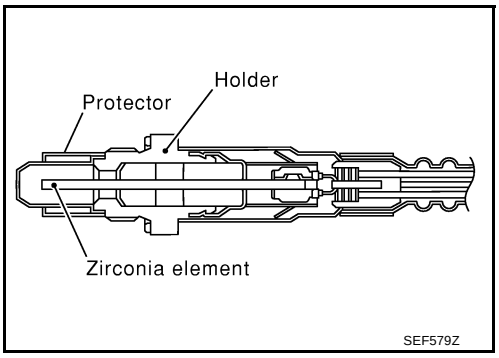

An electronic circuit controls the pump current through the oxygen-pump cell so that the composition of the exhaust gas in the diffusion gap remains constant at $\lambda = 1$. Therefore, the air fuel ratio (A/F) sensor is able to indicate air/fuel ratio by this pumping of current. In addition, a heater is integrated in the sensor to ensure the required operating temperature of 700 - 800°C (1,292 - 1,472°F).

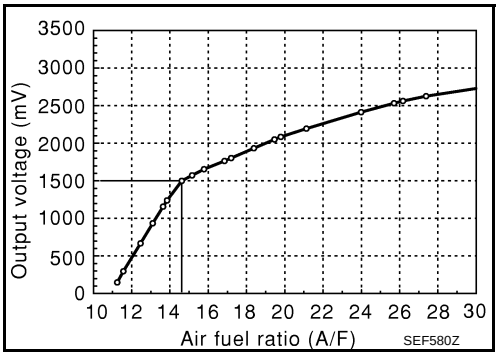

CONSULT-II Reference Value in Data Monitor Mode

ABS00A9U

Specification data are reference values.

MONITOR ITEM	CONDITION		SPECIFICATION
A/F SEN1 (B1) A/F SEN1 (B2)	● Engine: After warming up	Maintaining engine speed at 2,000 rpm	Fluctuates around 1.5V

On Board Diagnosis Logic

ABS00A9V

To judge the malfunction, the diagnosis checks that the A/F signal computed by ECM from the air fuel ratio (A/F) sensor 1 signal is not inordinately low.

DTC No.	Trouble diagnosis name	DTC detecting condition	Possible Cause
P1271 1271 (Bank 1)	Air fuel ratio (A/F) sensor 1 circuit no activity detected	● The A/F signal computed by ECM from the air fuel ratio (A/F) sensor 1 signal is constantly approx. 0V.	● Harness or connectors (The air fuel ratio (A/F) sensor 1 circuit is open or shorted.) ● Air fuel ratio (A/F) sensor 1
P1281 1281 (Bank 2)			

DTC Confirmation Procedure

ABS00A9W

NOTE:
If DTC Confirmation Procedure has been previously conducted, always turn ignition switch OFF and wait at least 10 seconds before conducting the next test.

TESTING CONDITION:
Before performing the following procedure, confirm that battery voltage is more than 11V at idle.

WITH CONSULT-II

1. Start engine and warm it up to normal operating temperature.
2. Select “A/F SEN1 (B1)” or “A/F SEN1 (B2)” in “DATA MONITOR” mode with CONSULT-II.

3. Check “A/F SEN1 (B1)” or “A/F SEN1 (B2)” indication.
   If the indication is constantly approx. 0V, go to EC-493, "Diagnostic Procedure" .
   If the indication is not constantly approx. 0V, go to next step.
4. Turn ignition switch OFF, wait at least 10 seconds and then restart engine.
5. Drive and accelerate vehicle to more than 40 km/h (25 MPH) within 20 seconds after restarting engine.
6. Maintain the following conditions for about 20 consecutive seconds.

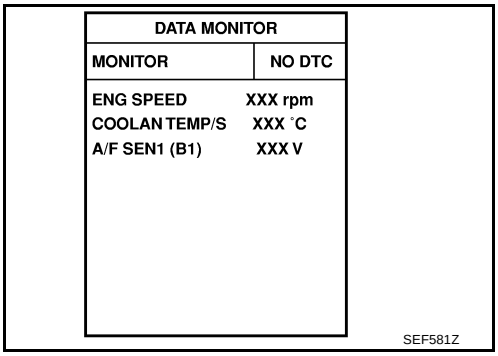

ENG SPEED	1,000 - 3,200 rpm
VHCL SPEED SE	More than 40 km/h (25 MPH)
B/FUEL SCHDL	1.5 - 9.0 msec
Gear position	Suitable position

NOTE:
- **Keep the accelerator pedal as steady as possible during the cruising.**
- **If this procedure is not completed within 1 minute after restarting engine at step 4, return to step 4.**

7. If 1st trip DTC is displayed, go to EC-493, "Diagnostic Procedure" .

WITH GST

Follow the procedure “WITH CONSULT-II” above.

Wiring Diagram
BANK 1

ABS00A9X

EC-AF1B1-01

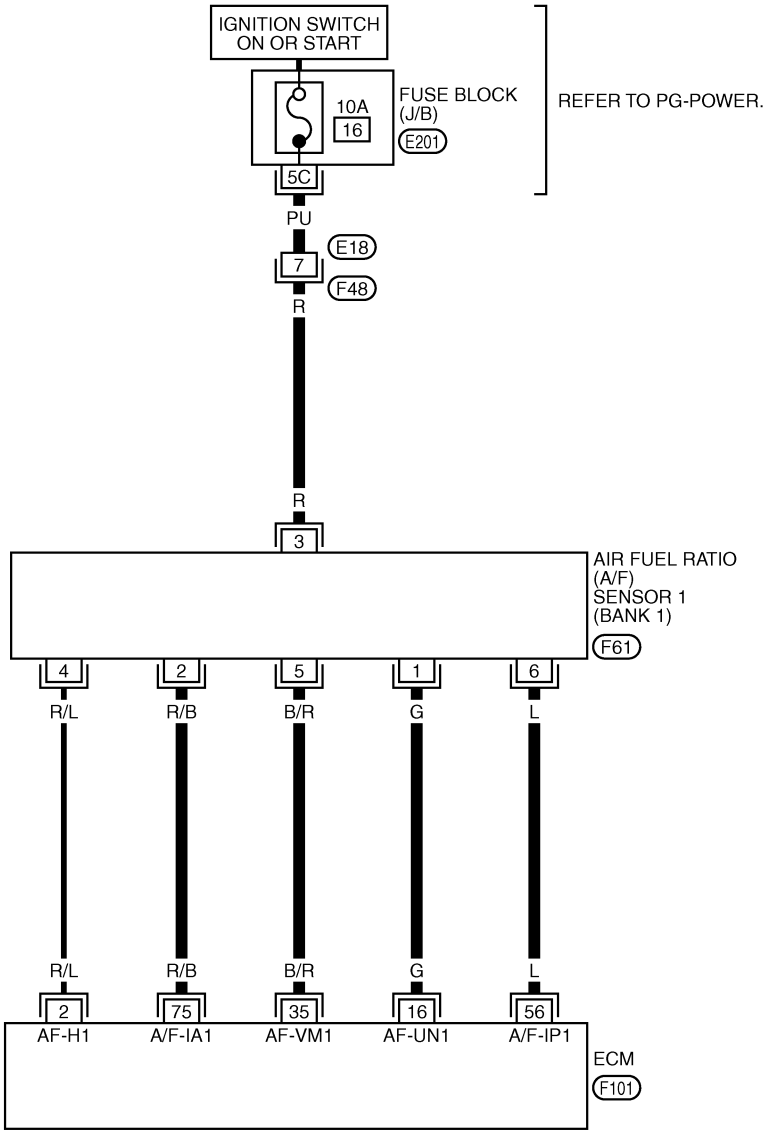

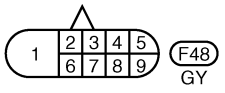

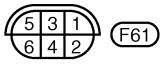

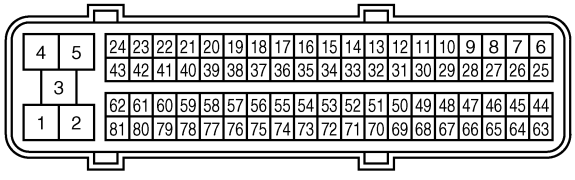

REFER TO THE FOLLOWING.
E201 -FUSE BLOCK-JUNCTION BOX (J/B)

TBWM0390E

Specification data are reference values and are measured between each terminal and ground.

CAUTION:

Do not use ECM ground terminals when measuring input/output voltage. Doing so may result in damage to the ECM's transistor. Use a ground other than ECM terminals, such as the ground.

TERMINAL NO.	WIRE COLOR	ITEM	CONDITION	DATA (DC Voltage)
16	G	A/F sensor 1 (Bank 1)	**[Engine is running]** ● **Warm-up condition** ● Idle speed	Approximately 3.1V
35	B/R			Approximately 2.6V
56	L			Approximately 2.3V
75	R/B			Approximately 2.3V

BANK 2

EC-AF1B2-01

: DETECTABLE LINE FOR DTC

: NON-DETECTABLE LINE FOR DTC

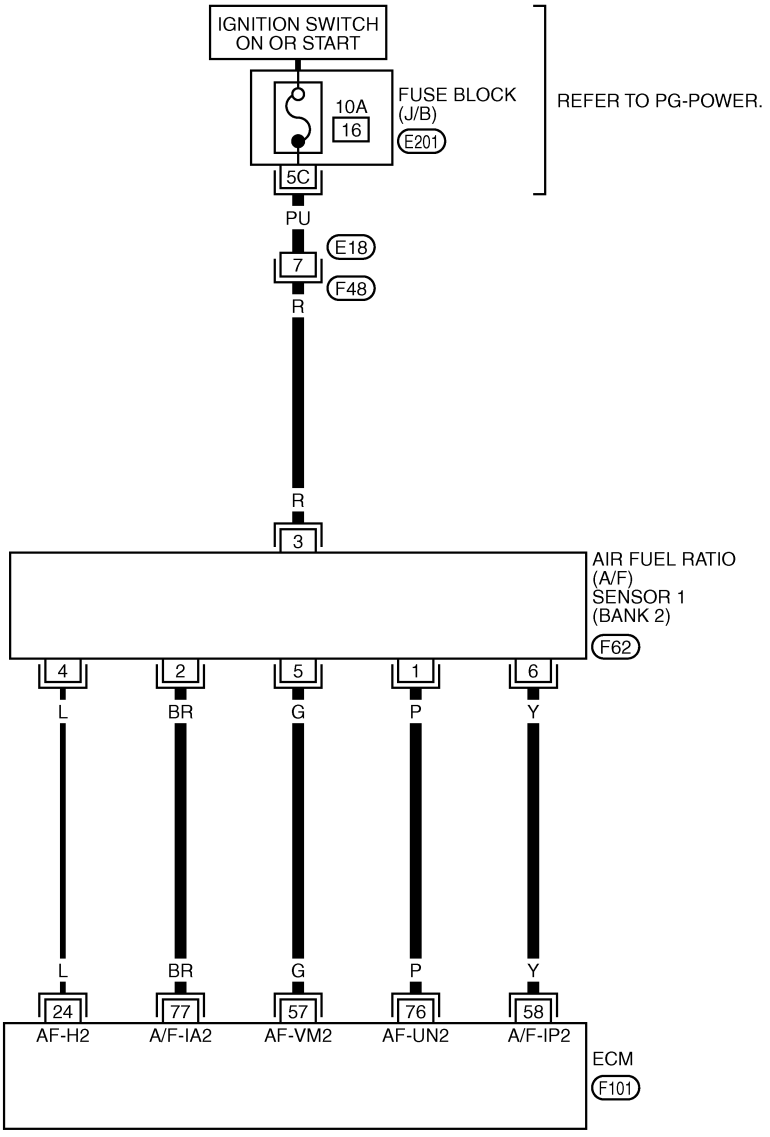

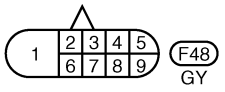

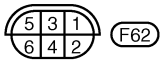

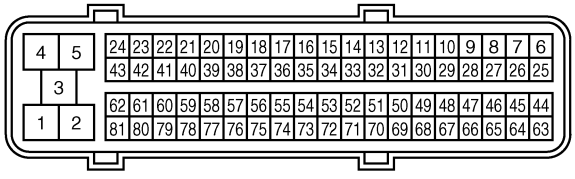

REFER TO THE FOLLOWING.

E201 -FUSE BLOCK-JUNCTION BOX (J/B)

TBWM0391E

Specification data are reference values and are measured between each terminal and ground.

CAUTION:
Do not use ECM ground terminals when measuring input/output voltage. Doing so may result in damage to the ECM's transistor. Use a ground other than ECM terminals, such as the ground.

TERMINAL NO.	WIRE COLOR	ITEM	CONDITION	DATA (DC Voltage)
57	G	A/F sensor 1 (Bank 2)	**[Engine is running]** ● **Warm-up condition** ● Idle speed	Approximately 2.6V
58	Y			Approximately 2.3V
76	P			Approximately 3.1V
77	BR			Approximately 2.3V

Diagnostic Procedure

ABS00A9Y

1. CHECK GROUND CONNECTIONS

1. Turn ignition switch OFF.
2. Loosen and retighten ground three screws on the body. Refer to EC-170, "Ground Inspection" .

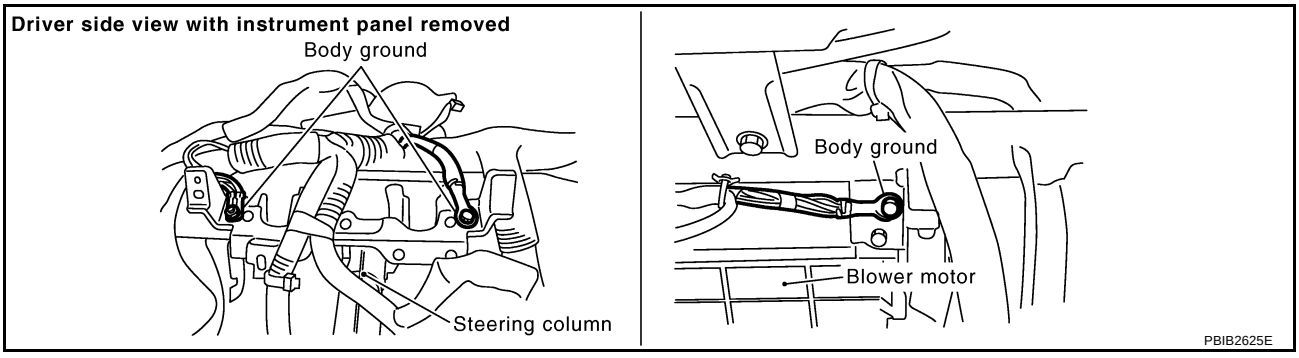

OK or NG

OK >> GO TO 2.
NG >> Repair or replace ground connections.

2. CHECK AIR FUEL RATIO (A/F) SENSOR 1 POWER SUPPLY CIRCUIT

1. Disconnect air fuel ratio (A/F) sensor 1 harness connector.

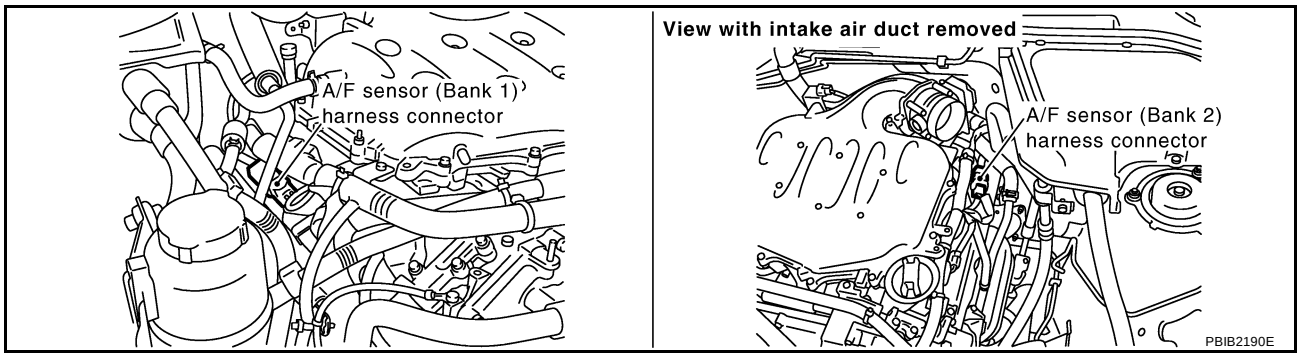

2. Turn ignition switch ON.
3. Check voltage between air fuel ratio (A/F) sensor 1 terminal 3 and ground with CONSULT-II or tester.

Voltage: Battery voltage

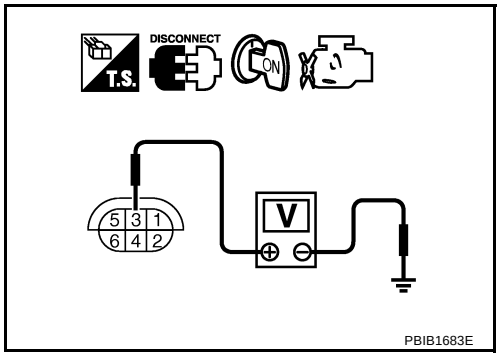

OK or NG

OK >> GO TO 4.
NG >> GO TO 3.

3. DETECT MALFUNCTIONING PART

Check the following.

- Harness connectors E18, F48
- Fuse block (J/B) connector E201
- 10A fuse
- Harness for open or short between air fuel ratio (A/F) sensor 1 and fuse

>> Repair or replace harness or connectors.

4. CHECK AIR FUEL RATIO (A/F) SENSOR 1 INPUT SIGNAL CIRCUIT

1. Turn ignition switch OFF.
2. Disconnect ECM harness connector.
3. Check harness continuity between the following terminals.
   Refer to Wiring Diagram.

	A/F sensor 1 terminal	ECM terminal
Bank1	1	16
	2	75
	5	35
	6	56
Bank 2	1	76
	2	77
	5	57
	6	58

Continuity should exist.

4. Check harness continuity between the following terminals and ground.
   Refer to Wiring Diagram.

Bank 1		Bank 2	
A/F sensor 1 terminal	ECM terminal	A/F sensor 1 terminal	ECM terminal
1	16	1	76
2	75	2	77
5	35	5	57
6	56	6	58

Continuity should not exist.

5. Also check harness for short to ground and short to power.

OK or NG

OK >> GO TO 5.
NG >> Repair open circuit or short to ground or short to power in harness or connectors.

5. CHECK INTERMITTENT INCIDENT

Perform EC-163, "TROUBLE DIAGNOSIS FOR INTERMITTENT INCIDENT" .

OK or NG

OK >> GO TO 6.
NG >> Repair or replace.

6. REPLACE AIR FUEL RATIO (A/F) SENSOR 1

Replace air fuel ratio (A/F) sensor 1.

CAUTION:

- **Discard any air fuel ratio (A/F) sensor which has been dropped from a height of more than 0.5 m (19.7 in) onto a hard surface such as a concrete floor; use a new one.**
- **Before installing new air fuel ratio (A/F) sensor, clean exhaust system threads using Heated Oxygen Sensor Thread Cleaner tool J-43897-18 or J-43897-12 and approved anti-seize lubricant.**

>> **INSPECTION END**

Removal and Installation

ABS00A9Z

AIR FUEL RATIO (A/F) SENSOR 1

Refer to EM-26, "EXHAUST MANIFOLD AND THREE WAY CATALYST" .

DTC P1272, P1282 A/F SENSOR 1

PFP:22693

Component Description

ABS00AA0

The air fuel ratio (A/F) sensor is a planar dual-cell limit current sensor. The sensor element of the air fuel ratio (A/F) sensor is the combination of a Nernst concentration cell (sensor cell) with an oxygen-pump cell, which transports ions. It has a heater in the element.

The sensor is capable of precise measurement λ = 1, but also in the lean and rich range. Together with its control electronics, the sensor outputs a clear, continuous signal throughout a wide λ range (0.7 < λ < air).

The exhaust gas components diffuse through the diffusion gap at the electrode of the oxygen pump and Nernst concentration cell, where they are brought to thermodynamic balance.

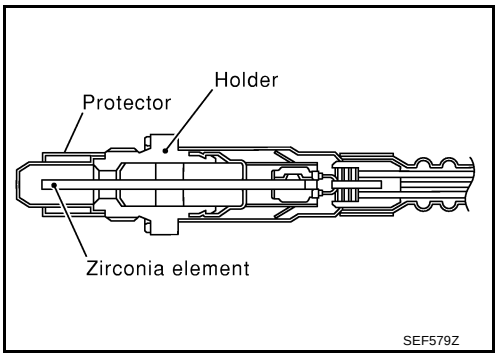

An electronic circuit controls the pump current through the oxygen-pump cell so that the composition of the exhaust gas in the diffusion gap remains constant at λ = 1. Therefore, the air fuel ratio (A/F) sensor is able to indicate air/fuel ratio by this pumping of current. In addition, a heater is integrated in the sensor to ensure the required operating temperature of 700 - 800°C (1,292 - 1,472°F).

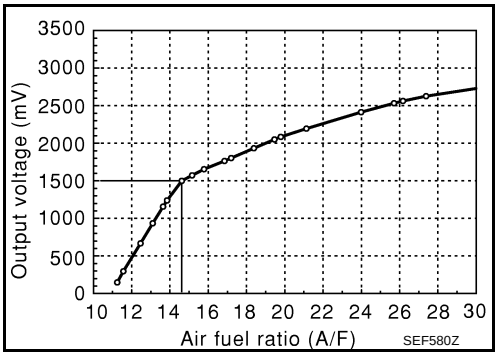

CONSULT-II Reference Value in Data Monitor Mode

ABS00AA1

Specification data are reference values.

MONITOR ITEM	CONDITION		SPECIFICATION
A/F SEN1 (B1) A/F SEN1 (B2)	● Engine: After warming up	Maintaining engine speed at 2,000 rpm	Fluctuates around 1.5V

On Board Diagnosis Logic

ABS00AA2

To judge the malfunction, the diagnosis checks that the A/F signal computed by ECM from the air fuel ratio (A/F) sensor 1 signal is not inordinately high.

DTC No.	Trouble diagnosis name	DTC detecting condition	Possible Cause
P1272 1272 (Bank 1)	Air fuel ratio (A/F) sensor 1 circuit no activity detected	● The A/F signal computed by ECM from the air fuel ratio (A/F) sensor 1 signal is constantly approx. 5V.	● Harness or connectors (The air fuel ratio (A/F) sensor 1 circuit is open or shorted.) ● Air fuel ratio (A/F) sensor 1
P1282 1282 (Bank 2)			

DTC Confirmation Procedure

ABS00AA3

NOTE:
If DTC Confirmation Procedure has been previously conducted, always turn ignition switch OFF and wait at least 10 seconds before conducting the next test.

TESTING CONDITION:
Before performing the following procedure, confirm that battery voltage is more than 11V at idle.

WITH CONSULT-II

1. Start engine and warm it up to normal operating temperature.
2. Select “A/F SEN1 (B1)” or “A/F SEN1 (B2)” in “DATA MONITOR” mode with CONSULT-II.

3. Check “A/F SEN1 (B1)” or “A/F SEN1 (B2)” indication.
   If the indication is constantly approx. 5V, go to EC-502, "Diagnostic Procedure" .
   If the indication is not constantly approx. 5V, go to next step.
4. Turn ignition switch OFF, wait at least 10 seconds and then restart engine.
5. Drive and accelerate vehicle to more than 40 km/h (25 MPH) within 20 seconds after restarting engine.
6. Maintain the following conditions for about 20 consecutive seconds.

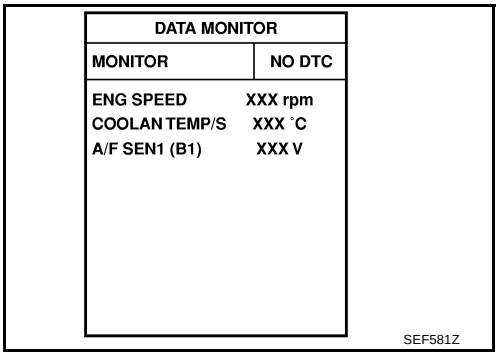

ENG SPEED	1,000 - 3,200 rpm
VHCL SPEED SE	More than 40 km/h (25 MPH)
B/FUEL SCHDL	1.5 - 9.0 msec
Gear position	Suitable position

NOTE:
- **Keep the accelerator pedal as steady as possible during the cruising.**
- **If this procedure is not completed within 1 minute after restarting engine at step 4, return to step 4.**

7. If 1st trip DTC is displayed, go to EC-502, "Diagnostic Procedure" .

WITH GST

Follow the procedure “WITH CONSULT-II” above.

Wiring Diagram
BANK 1

ABS00AA4

EC-AF1B1-01

: DETECTABLE LINE FOR DTC
: NON-DETECTABLE LINE FOR DTC

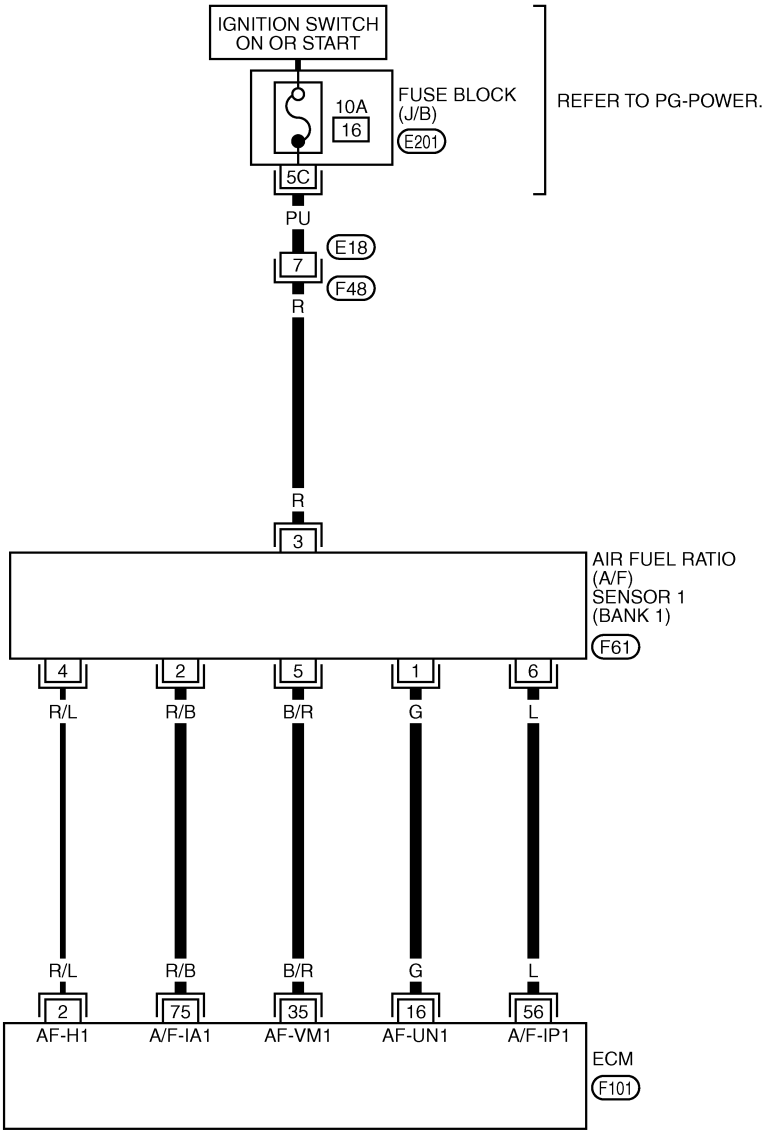

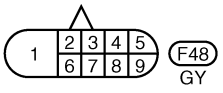

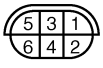

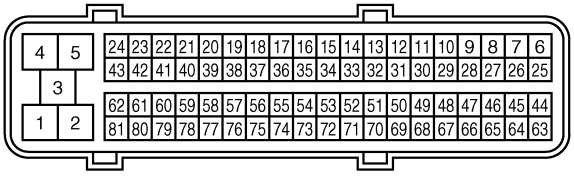

REFER TO THE FOLLOWING.
E201 -FUSE BLOCK-JUNCTION BOX (J/B)

TBWM0390E

Specification data are reference values and are measured between each terminal and ground.

CAUTION:

Do not use ECM ground terminals when measuring input/output voltage. Doing so may result in damage to the ECM's transistor. Use a ground other than ECM terminals, such as the ground.

TERMINAL NO.	WIRE COLOR	ITEM	CONDITION	DATA (DC Voltage)
16	G	A/F sensor 1 (Bank 1)	**[Engine is running]** ● **Warm-up condition** ● Idle speed	Approximately 3.1V
35	B/R			Approximately 2.6V
56	L			Approximately 2.3V
75	R/B			Approximately 2.3V

BANK 2

EC-AF1B2-01

: DETECTABLE LINE FOR DTC
: NON-DETECTABLE LINE FOR DTC

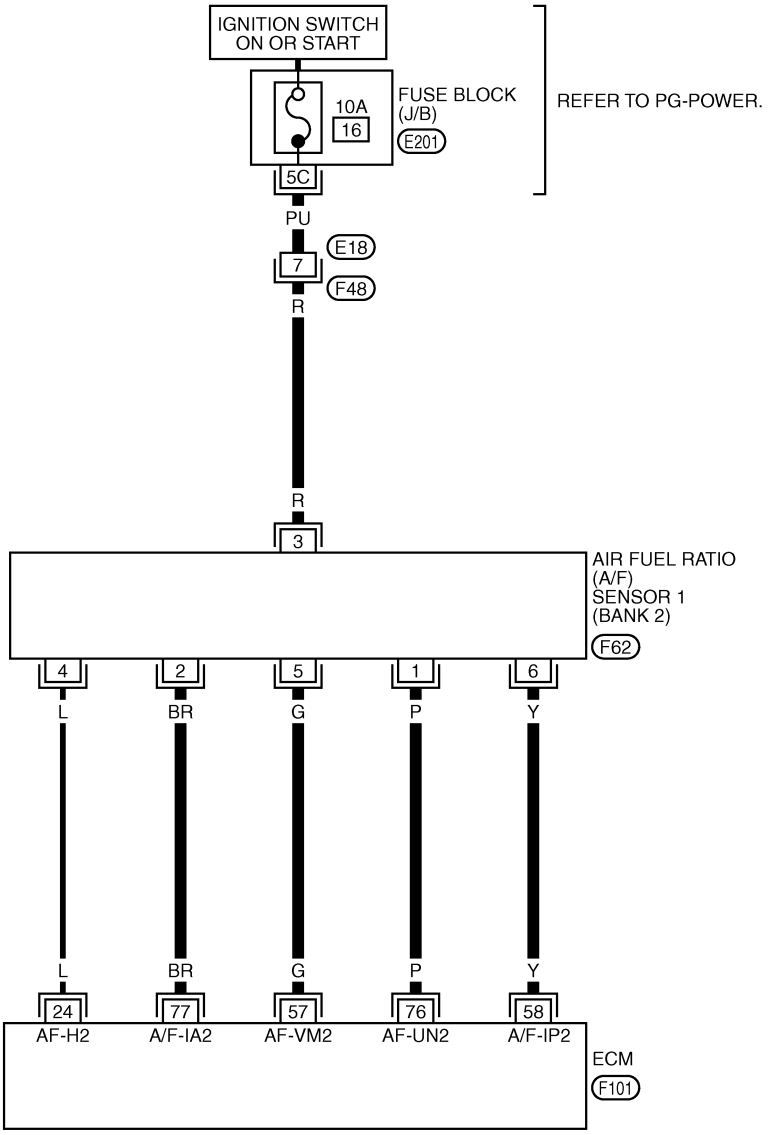

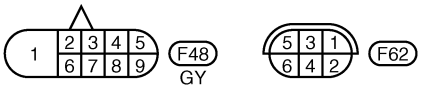

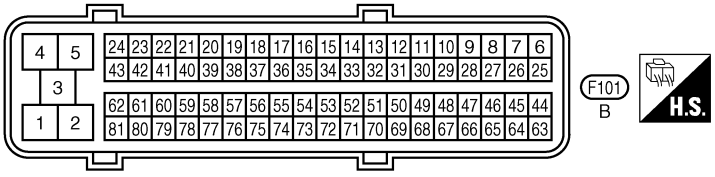

REFER TO THE FOLLOWING.
E201 -FUSE BLOCK-JUNCTION BOX (J/B)

TBWM0391E

Specification data are reference values and are measured between each terminal and ground.

CAUTION:

Do not use ECM ground terminals when measuring input/output voltage. Doing so may result in damage to the ECM's transistor. Use a ground other than ECM terminals, such as the ground.

TERMINAL NO.	WIRE COLOR	ITEM	CONDITION	DATA (DC Voltage)
57	G	A/F sensor 1 (Bank 2)	**[Engine is running]** ● **Warm-up condition** ● Idle speed	Approximately 2.6V
58	Y			Approximately 2.3V
76	P			Approximately 3.1V
77	BR			Approximately 2.3V

Diagnostic Procedure

ABS00AA5

1. CHECK GROUND CONNECTIONS

1. Turn ignition switch OFF.
2. Loosen and retighten ground three screws.Refer to EC-170, "Ground Inspection" .

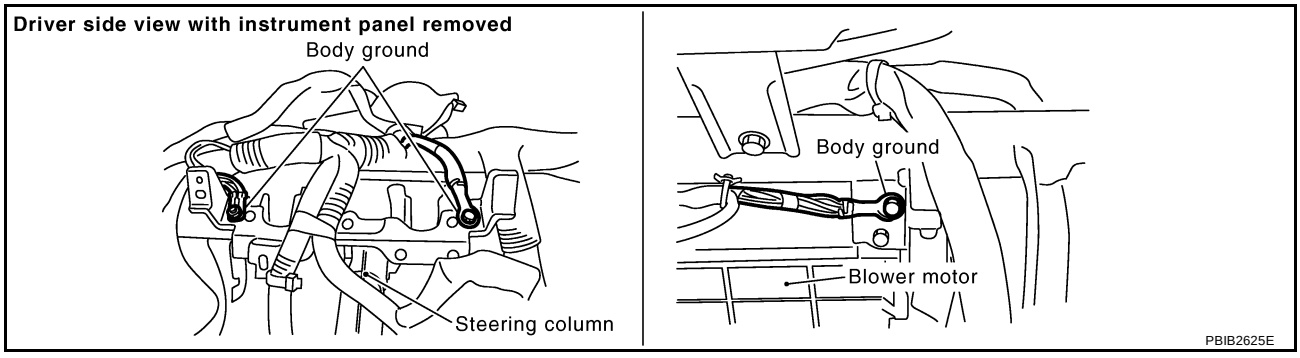

OK or NG

OK >> GO TO 2.
NG >> Repair or replace ground connections.

2. CHECK AIR FUEL RATIO (A/F) SENSOR 1 POWER SUPPLY CIRCUIT

1. Disconnect air fuel ratio (A/F) sensor 1 harness connector.

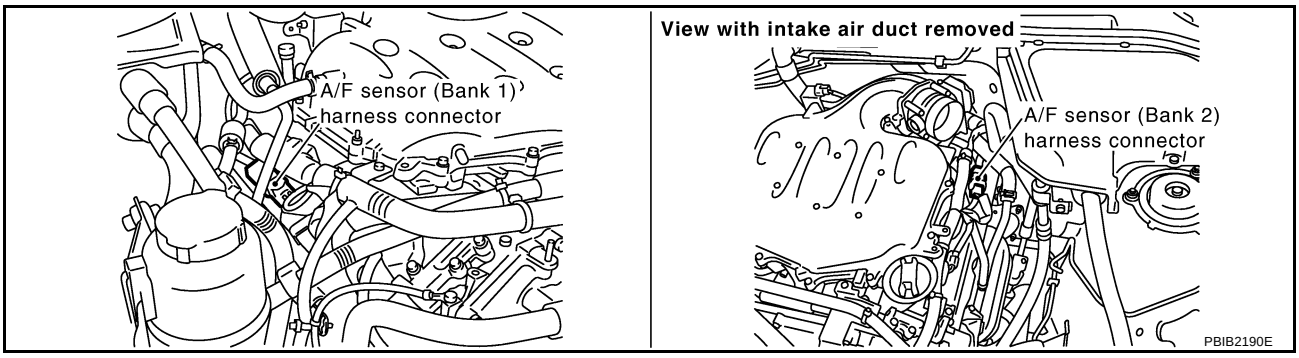

2. Turn ignition switch ON.
3. Check voltage between air fuel ratio (A/F) sensor 1 terminal 3 and ground with CONSULT-II or tester.

Voltage: Battery voltage

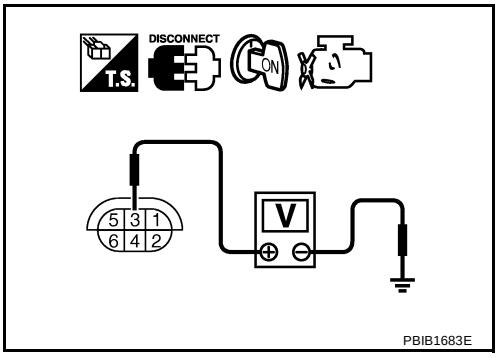

OK or NG

OK >> GO TO 4.
NG >> GO TO 3.

3. DETECT MALFUNCTIONING PART

Check the following.

- Harness connectors E18, F48
- Fuse block (J/B) connector E201
- 10A fuse
- Harness for open or short between air fuel ratio (A/F) sensor 1 and fuse

>> Repair or replace harness or connectors.

4. CHECK AIR FUEL RATIO (A/F) SENSOR 1 INPUT SIGNAL CIRCUIT

1. Turn ignition switch OFF.
2. Disconnect ECM harness connector.
3. Check harness continuity between the following terminals.
   Refer to Wiring Diagram.

	A/F sensor 1 terminal	ECM terminal
Bank1	1	16
	2	75
	5	35
	6	56
Bank 2	1	76
	2	77
	5	57
	6	58

Continuity should exist.

4. Check harness continuity between the following terminals and ground.
   Refer to Wiring Diagram.

Bank 1		Bank 2	
A/F sensor 1 terminal	ECM terminal	A/F sensor 1 terminal	ECM terminal
1	16	1	76
2	75	2	77
5	35	5	57
6	56	6	58

Continuity should not exist.

5. Also check harness for short to ground and short to power.

OK or NG

OK >> GO TO 5.
NG >> Repair open circuit or short to ground or short to power in harness or connectors.

5. CHECK INTERMITTENT INCIDENT

Perform EC-163, "TROUBLE DIAGNOSIS FOR INTERMITTENT INCIDENT" .

OK or NG

OK >> GO TO 6.
NG >> Repair or replace.

6. REPLACE AIR FUEL RATIO (A/F) SENSOR 1

Replace air fuel ratio (A/F) sensor 1.

CAUTION:

- **Discard any air fuel ratio (A/F) sensor which has been dropped from a height of more than 0.5 m (19.7 in) onto a hard surface such as a concrete floor; use a new one.**
- **Before installing new air fuel ratio (A/F) sensor, clean exhaust system threads using Heated Oxygen Sensor Thread Cleaner tool J-43897-18 or J-43897-12 and approved anti-seize lubricant.**

>> **INSPECTION END**

Removal and Installation

ABS00AA6

AIR FUEL RATIO (A/F) SENSOR 1

Refer to EM-26, "EXHAUST MANIFOLD AND THREE WAY CATALYST" .

DTC P1273, P1283 A/F SENSOR 1

PFP:22693

Component Description

ABS00AA7

The air fuel ratio (A/F) sensor is a planar dual-cell limit current sensor. The sensor element of the air fuel ratio (A/F) sensor is the combination of a Nernst concentration cell (sensor cell) with an oxygen-pump cell, which transports ions. It has a heater in the element.

The sensor is capable of precise measurement $\lambda = 1$, but also in the lean and rich range. Together with its control electronics, the sensor outputs a clear, continuous signal throughout a wide λ range ($0.7 < \lambda <$ air).

The exhaust gas components diffuse through the diffusion gap at the electrode of the oxygen pump and Nernst concentration cell, where they are brought to thermodynamic balance.

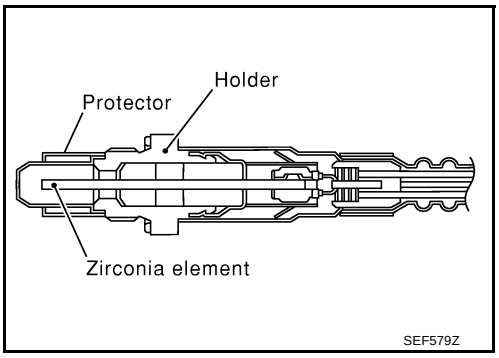

An electronic circuit controls the pump current through the oxygen-pump cell so that the composition of the exhaust gas in the diffusion gap remains constant at $\lambda = 1$. Therefore, the air fuel ratio (A/F) sensor is able to indicate air/fuel ratio by this pumping of current. In addition, a heater is integrated in the sensor to ensure the required operating temperature of 700 - 800°C (1,292 - 1,472°F).

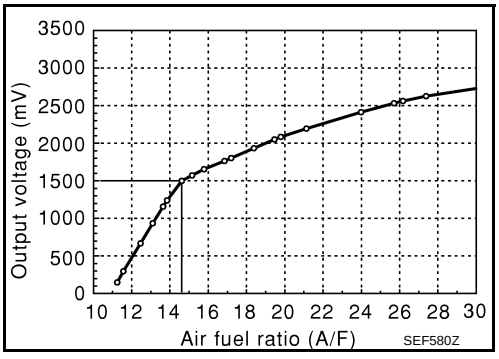

CONSULT-II Reference Value in Data Monitor Mode

ABS00AA8

Specification data are reference values.

MONITOR ITEM	CONDITION		SPECIFICATION
A/F SEN1 (B1) A/F SEN1 (B2)	● Engine: After warming up	Maintaining engine speed at 2,000 rpm	Fluctuates around 1.5V

On Board Diagnosis Logic

ABS00AA9

To judge the malfunction, the A/F signal computed by ECM from the air fuel ratio (A/F) sensor 1 signal is monitored not to be shifted to LEAN side or RICH side.

DTC No.	Trouble diagnosis name	DTC detecting condition	Possible Cause
P1273 1273 (Bank 1)	Air fuel ratio (A/F) sensor 1 lean shift monitoring	● The output voltage computed by ECM from the air fuel ratio (A/F) sensor 1 signal is shifted to the lean side for a specified period.	● Air fuel ratio (A/F) sensor 1 ● Air fuel ratio (A/F) sensor 1 heater ● Fuel pressure ● Fuel injector ● Intake air leaks
P1283 1283 (Bank 2)			

DTC Confirmation Procedure

ABS00AAA

NOTE:
If DTC Confirmation Procedure has been previously conducted, always turn ignition switch OFF and wait at least 10 seconds before conducting the next test.

TESTING CONDITION:
Before performing the following procedure, confirm that battery voltage is more than 11V at idle.

WITH CONSULT-II

1. Start engine and warm it up to normal operating temperature.
2. Turn ignition switch OFF and wait at least 10 seconds.
3. Turn ignition switch ON and select “SELF-LEARNING CONT” in “WORK SUPPORT” mode with CONSULT-II.

4. Clear the self-learning coefficient by touching “CLEAR”.
5. Turn ignition switch OFF and wait at least 10 seconds.
6. Start engine and keep the engine speed between 3,500 and 4,000 rpm for 1 minute under no load.
7. Let engine idle for 1 minute.
8. Keep engine speed between 2,500 and 3,000 rpm for 20 minutes.
9. If 1st trip DTC is detected, go to EC-511, "Diagnostic Procedure" .

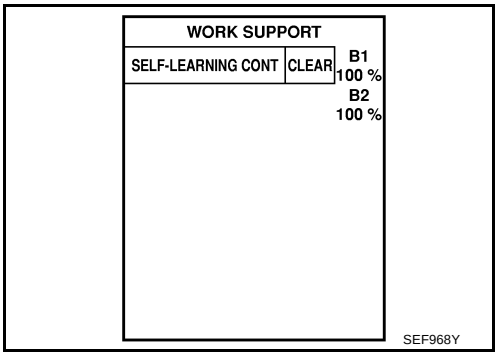

WITH GST

1. Start engine and warm it up to normal operating temperature.
2. Turn ignition switch OFF and wait at least 10 seconds.
3. Disconnect mass air flow sensor harness connector.
4. Start engine and let it idle for at least 5 seconds.
5. Stop engine and reconnect mass air flow sensor harness connector.
6. Select Service $03 with GST and make sure that DTC P0102 is detected.
7. Select Service $04 with GST and erase the DTC P0102.
8. Start engine and keep the engine speed between 3,500 and 4,000 rpm for 1 minute under no load.
9. Let engine idle for 1 minute.
10. Keep engine speed between 2,500 and 3,000 rpm for 20 minutes.
11. Select Service $07 with GST.
    If 1st trip DTC is detected, go to EC-511, "Diagnostic Procedure" .

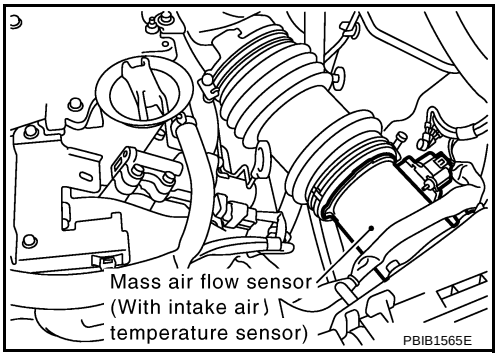

Wiring Diagram
BANK 1

ABS00AAB

EC-AF1B1-01

: DETECTABLE LINE FOR DTC
: NON-DETECTABLE LINE FOR DTC

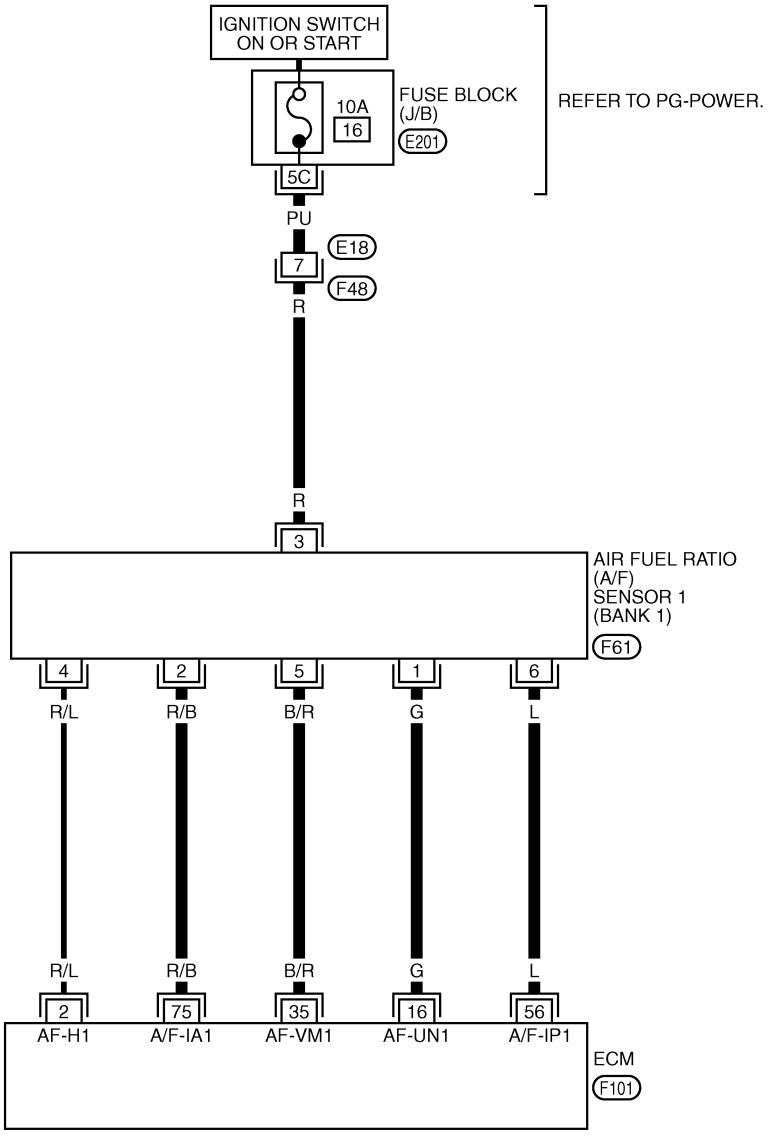

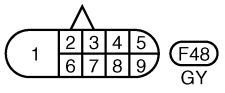

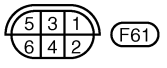

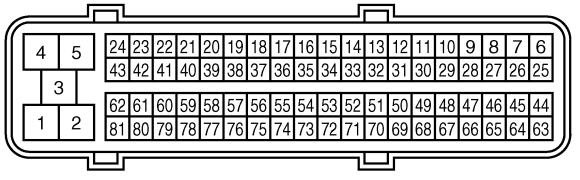

REFER TO THE FOLLOWING.
E201 -FUSE BLOCK-JUNCTION BOX (J/B)

TBWM0390E

Specification data are reference values and are measured between each terminal and ground.

CAUTION:

Do not use ECM ground terminals when measuring input/output voltage. Doing so may result in damage to the ECM's transistor. Use a ground other than ECM terminals, such as the ground.

TERMINAL NO.	WIRE COLOR	ITEM	CONDITION	DATA (DC Voltage)
16	G	A/F sensor 1 (Bank 1)	**[Engine is running]** ● **Warm-up condition** ● Idle speed	Approximately 3.1V
35	B/R			Approximately 2.6V
56	L			Approximately 2.3V
75	R/B			Approximately 2.3V

BANK 2

EC-AF1B2-01

: DETECTABLE LINE FOR DTC

: NON-DETECTABLE LINE FOR DTC

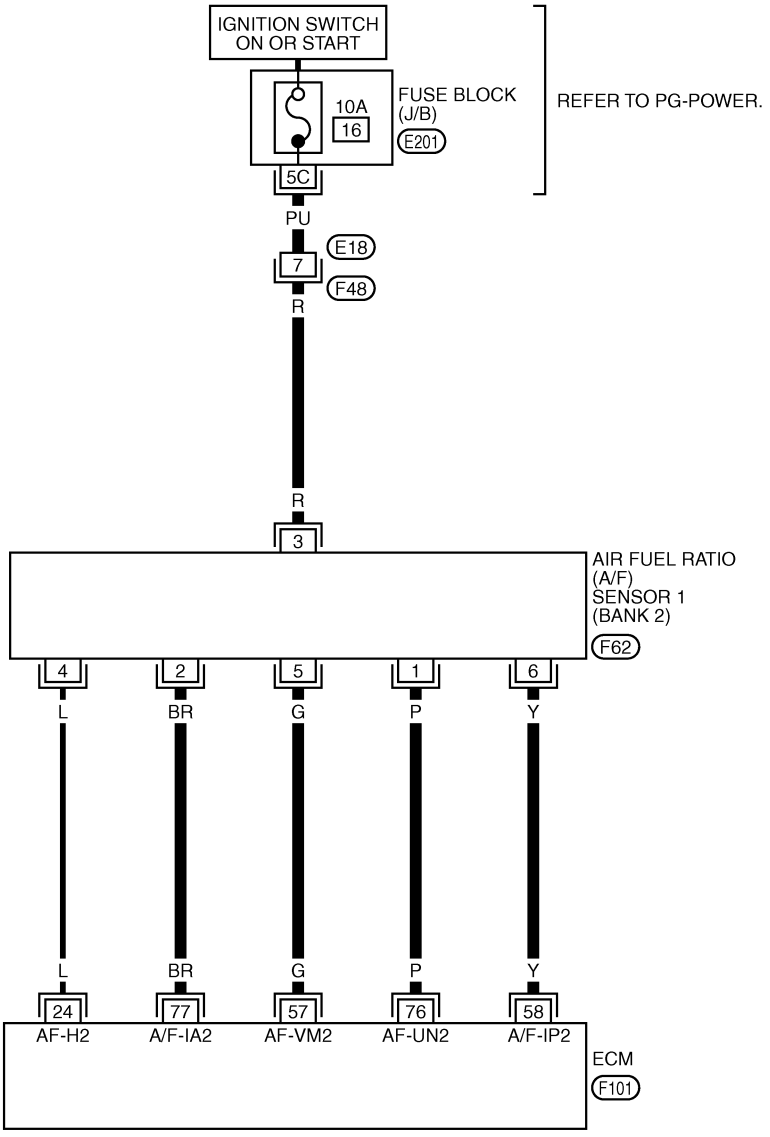

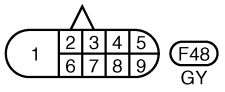

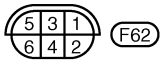

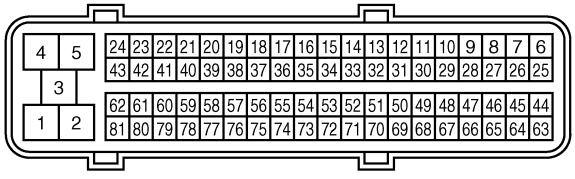

REFER TO THE FOLLOWING.

E201 -FUSE BLOCK-JUNCTION BOX (J/B)

TBWM0391E

Specification data are reference values and are measured between each terminal and ground.

CAUTION:

Do not use ECM ground terminals when measuring input/output voltage. Doing so may result in damage to the ECM's transistor. Use a ground other than ECM terminals, such as the ground.

TERMINAL NO.	WIRE COLOR	ITEM	CONDITION	DATA (DC Voltage)
57	G	A/F sensor 1 (Bank 2)	**[Engine is running]** ● **Warm-up condition** ● Idle speed	Approximately 2.6V
58	Y			Approximately 2.3V
76	P			Approximately 3.1V
77	BR			Approximately 2.3V

Diagnostic Procedure

ABS00AAC

1. CHECK GROUND CONNECTIONS

1. Turn ignition switch OFF.
2. Loosen and retighten ground three screws on the body. Refer to EC-170, "Ground Inspection" .

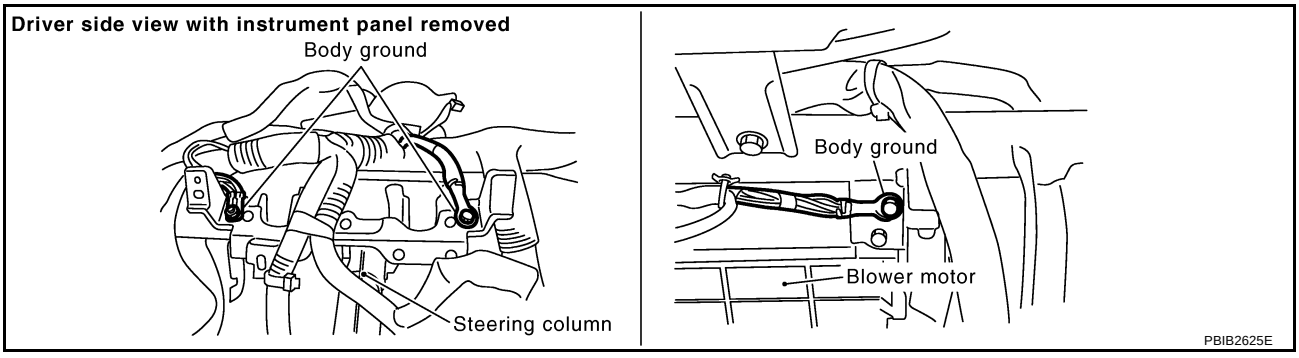

OK or NG

OK >> GO TO 2.

NG >> Repair or replace ground connections.

2. RETIGHTEN AIR FUEL RATIO (A/F) SENSOR 1

Loosen and retighten the air fuel ratio (A/F) sensor 1.

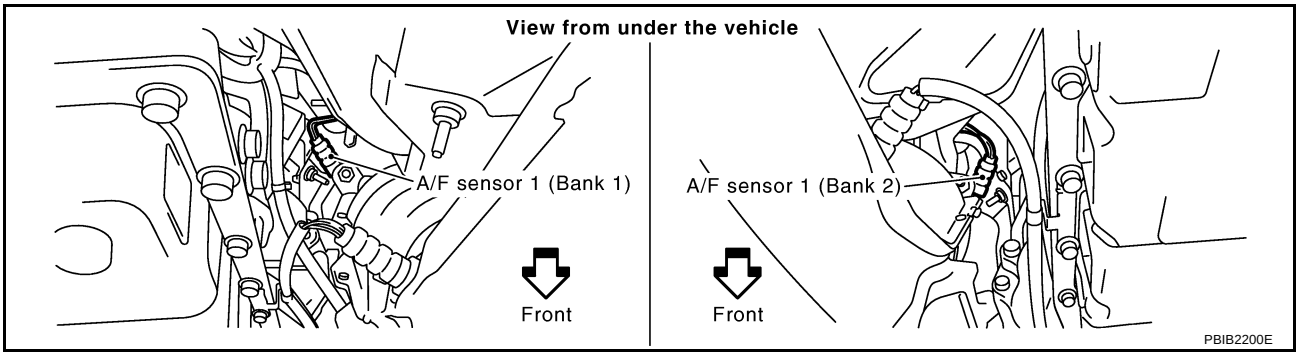

Tightening torque: 40 - 60 N-m (4.1 - 6.1 kg-m, 30 - 44 ft-lb)

>> GO TO 3.

3. CLEAR THE SELF-LEARNING DATA.

With CONSULT-II

1. Start engine and warm it up to normal operating temperature.
2. Select “SELF-LEARNING CONT” in “WORK SUPPORT” mode with CONSULT-II.
3. Clear the self-learning control coefficient by touching “CLEAR”.
4. Run engine for at least 10 minutes at idle speed.
   Is the 1st trip DTC P0171 or P0174 detected?
   Is it difficult to start engine?

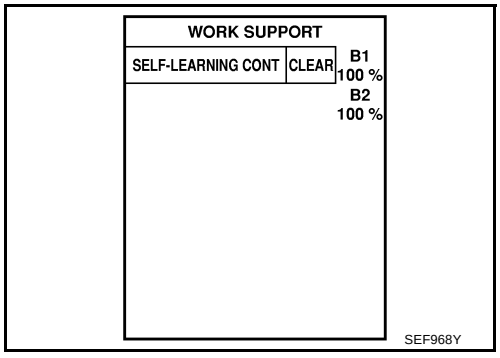

Without CONSULT-II

1. Start engine and warm it up to normal operating temperature.
2. Turn ignition switch OFF.
3. Disconnect mass air flow sensor harness connector.
4. Restart engine and let it idle for at least 5 seconds.
5. Stop engine and reconnect mass air flow sensor harness connector.
6. Make sure DTC P0102 is displayed.
7. Erase the DTC memory. Refer to EC-68, "HOW TO ERASE EMISSION-RELATED DIAGNOSTIC INFORMATION" .
8. Make sure DTC P0000 is displayed.
9. Run engine for at least 10 minutes at idle speed.
   Is the 1st trip DTC P0171 or P0174 detected?
   Is it difficult to start engine?

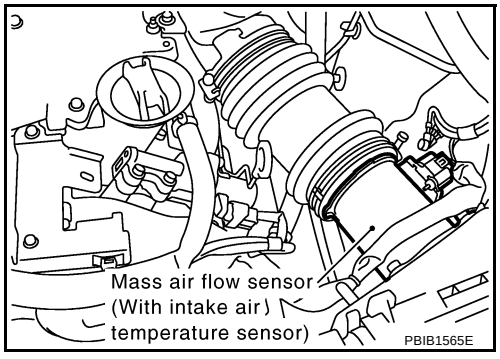

Yes or No

Yes >> Perform trouble diagnosis for DTC P0171or P0174. Refer to EC-248, "DTC P0171, P0174 FUEL INJECTION SYSTEM FUNCTION" .

No >> GO TO 4.

4. CHECK AIR FUEL RATIO (A/F) SENSOR 1 POWER SUPPLY CIRCUIT

1. Turn ignition switch OFF.
2. Disconnect air fuel ratio (A/F) sensor 1 harness connector.

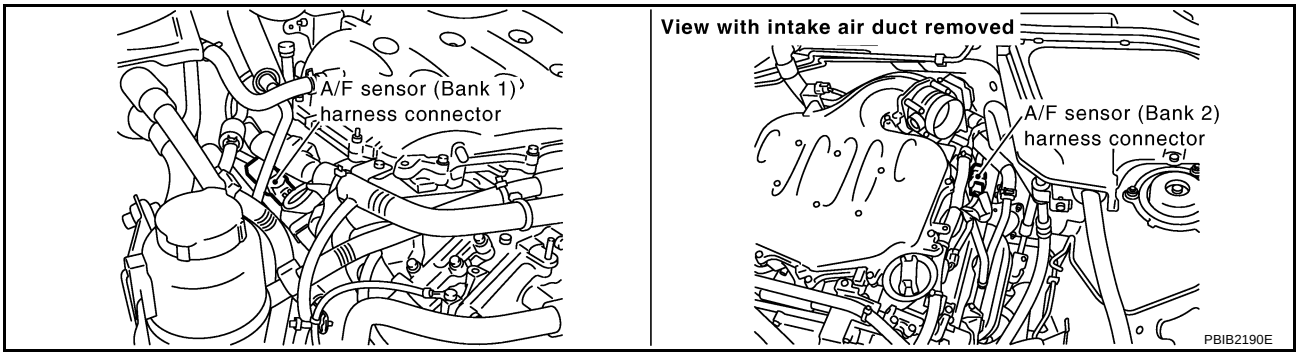

3. Turn ignition switch ON.
4. Check voltage between air fuel ratio (A/F) sensor 1 terminal 3 and ground with CONSULT-II or tester.

Voltage: Battery voltage

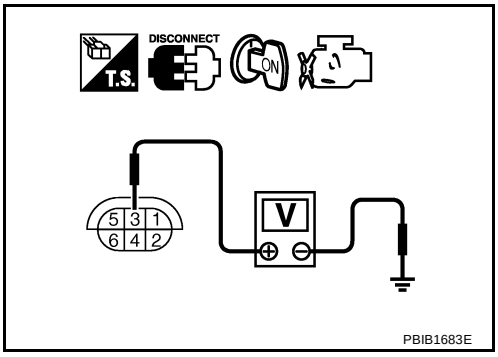

OK or NG

OK >> GO TO 6.
NG >> GO TO 5.

5. DETECT MALFUNCTIONING PART

Check the following.

- Harness connectors E18, F48
- Fuse block (J/B) connector E201
- 10A fuse
- Harness for open or short between air fuel ratio (A/F) sensor 1 and fuse

>> Repair or replace harness or connectors.

6. CHECK AIR FUEL RATIO (A/F) SENSOR 1 INPUT SIGNAL CIRCUIT

1. Turn ignition switch OFF.
2. Disconnect ECM harness connector.
3. Check harness continuity between the following terminals.
   Refer to Wiring Diagram.

	A/F sensor 1 terminal	ECM terminal
Bank1	1	16
	2	75
	5	35
	6	56
Bank 2	1	76
	2	77
	5	57
	6	58

Continuity should exist.

4. Check harness continuity between the following terminals and ground.
   Refer to Wiring Diagram.

Bank 1		Bank 2	
A/F sensor 1 terminal	ECM terminal	A/F sensor 1 terminal	ECM terminal
1	16	1	76
2	75	2	77
5	35	5	57
6	56	6	58

Continuity should not exist.

5. Also check harness for short to ground and short to power.

OK or NG

OK >> GO TO 7.
NG >> Repair open circuit or short to ground or short to power in harness or connectors.

7. CHECK AIR FUEL RATIO (A/F) SENSOR 1 HEATER

Refer to EC-412, "Component Inspection" .

OK or NG

OK >> GO TO 8.
NG >> Replace air fuel ratio (A/F) sensor 1.

8. CHECK INTERMITTENT INCIDENT

Perform EC-163, "TROUBLE DIAGNOSIS FOR INTERMITTENT INCIDENT" .

OK or NG

OK >> GO TO 9.
NG >> Repair or replace.

9. REPLACE AIR FUEL RATIO (A/F) SENSOR 1

Replace air fuel ratio (A/F) sensor 1.

CAUTION:

- **Discard any air fuel ratio (A/F) sensor which has been dropped from a height of more than 0.5 m (19.7 in) onto a hard surface such as a concrete floor; use a new one.**
- **Before installing new air fuel ratio (A/F) sensor, clean exhaust system threads using Heated Oxygen Sensor Thread Cleaner tool J-43897-18 or J-43897-12 and approved anti-seize lubricant.**

>> **INSPECTION END**

Removal and Installation

ABS00AAD

AIR FUEL RATIO (A/F) SENSOR 1

Refer to EM-26, "EXHAUST MANIFOLD AND THREE WAY CATALYST" .

DTC P1274, P1284 A/F SENSOR 1

PFP:22693

Component Description

ABS00AAE

The air fuel ratio (A/F) sensor is a planar dual-cell limit current sensor. The sensor element of the air fuel ratio (A/F) sensor is the combination of a Nernst concentration cell (sensor cell) with an oxygen-pump cell, which transports ions. It has a heater in the element.

The sensor is capable of precise measurement $\lambda = 1$, but also in the lean and rich range. Together with its control electronics, the sensor outputs a clear, continuous signal throughout a wide λ range ($0.7 < \lambda <$ air).

The exhaust gas components diffuse through the diffusion gap at the electrode of the oxygen pump and Nernst concentration cell, where they are brought to thermodynamic balance.

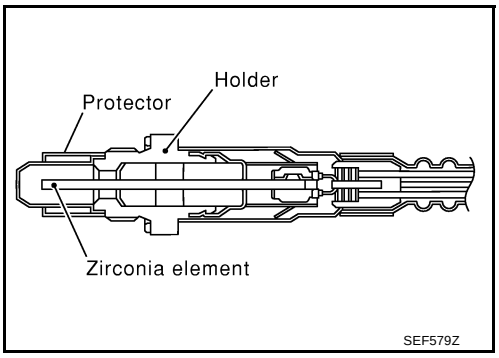

An electronic circuit controls the pump current through the oxygen-pump cell so that the composition of the exhaust gas in the diffusion gap remains constant at $\lambda = 1$. Therefore, the air fuel ratio (A/F) sensor is able to indicate air/fuel ratio by this pumping of current. In addition, a heater is integrated in the sensor to ensure the required operating temperature of 700 - 800°C (1,292 - 1,472°F).

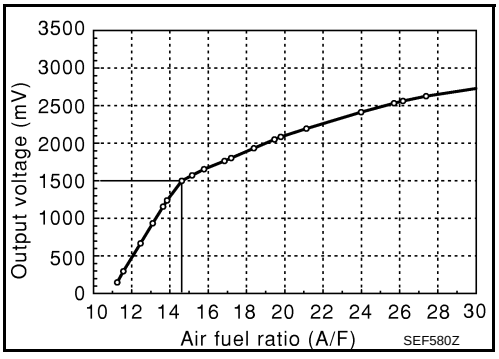

CONSULT-II Reference Value in Data Monitor Mode

ABS00AAF

Specification data are reference values.

MONITOR ITEM	CONDITION		SPECIFICATION
A/F SEN1 (B1) A/F SEN1 (B2)	● Engine: After warming up	Maintaining engine speed at 2,000 rpm	Fluctuates around 1.5V

On Board Diagnosis Logic

ABS00AAG

To judge the malfunction, the A/F signal computed by ECM from the air fuel ratio (A/F) sensor 1 signal is monitored not to be shifted to LEAN side or RICH side.

DTC No.	Trouble diagnosis name	DTC detecting condition	Possible Cause
P1274 1274 (Bank 1)	Air fuel ratio (A/F) sensor 1 rich shift monitoring	● The A/F signal computed by ECM from the air fuel ratio (A/F) sensor 1 signal is shifted to the rich side for a specified period.	● Air fuel ratio (A/F) sensor 1 ● Air fuel ratio (A/F) sensor 1 heater ● Fuel pressure ● Fuel Injector
P1284 1244 (Bank 2)			

DTC Confirmation Procedure

ABS00AAH

NOTE:
If DTC Confirmation Procedure has been previously conducted, always turn ignition switch OFF and wait at least 10 seconds before conducting the next test.

TESTING CONDITION:
Before performing the following procedure, confirm that battery voltage is more than 11V at idle.

WITH CONSULT-II

1. Start engine and warm it up to normal operating temperature.
2. Turn ignition switch OFF and wait at least 10 seconds.
3. Turn ignition switch ON and select “SELF-LEARNING CONT” in “WORK SUPPORT” mode with CONSULT-II.

4. Clear the self-learning coefficient by touching “CLEAR”.
5. Turn ignition switch OFF and wait at least 10 seconds.
6. Start engine and keep the engine speed between 3,500 and 4,000 rpm for 1 minute under no load.
7. Let engine idle for 1 minute.
8. Keep engine speed between 2,500 and 3,000 rpm for 20 minutes.
9. If 1st trip DTC is detected, go to EC-521, "Diagnostic Procedure" .

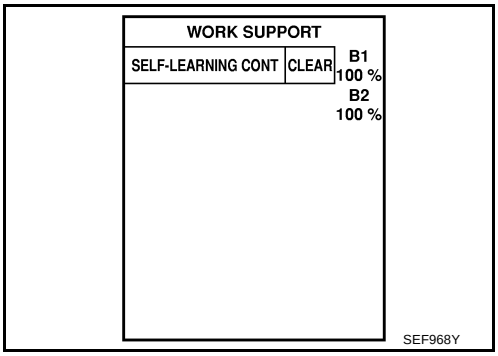

WITH GST

1. Start engine and warm it up to normal operating temperature.
2. Turn ignition switch OFF and wait at least 10 seconds.
3. Disconnect mass air flow sensor harness connector.
4. Start engine and let it idle for at least 5 seconds.
5. Stop engine and reconnect mass air flow sensor harness connector.
6. Select Service $03 with GST and make sure that DTC P0102 is detected.
7. Select Service $04 with GST and erase the DTC P0102.
8. Start engine and keep the engine speed between 3,500 and 4,000 rpm for 1 minute under no load.
9. Let engine idle for 1 minute.
10. Keep engine speed between 2,500 and 3,000 rpm for 20 minutes.
11. Select Service $07 with GST.
    If 1st trip DTC is detected, go to EC-521, "Diagnostic Procedure" .

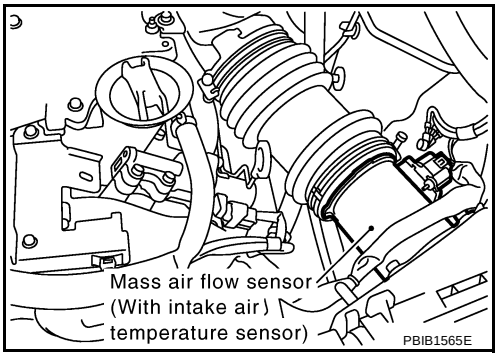

Wiring Diagram
BANK 1

ABS00AAI

EC-AF1B1-01

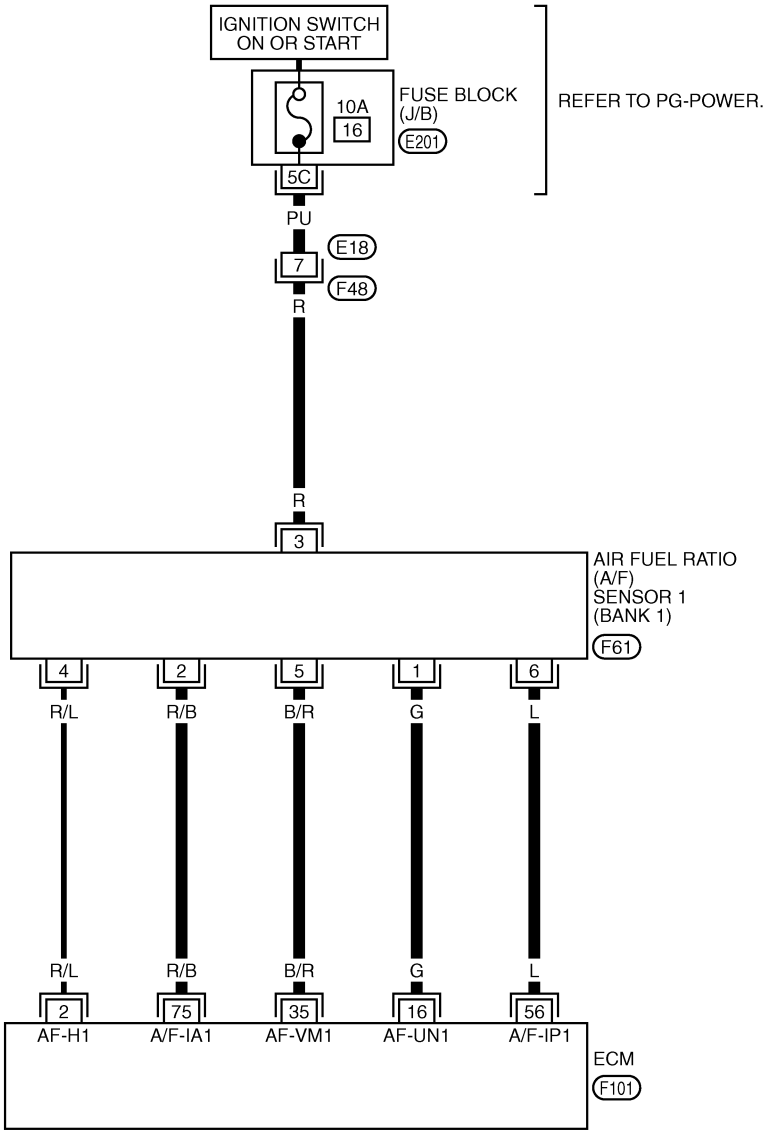

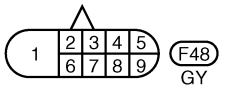

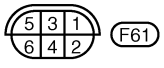

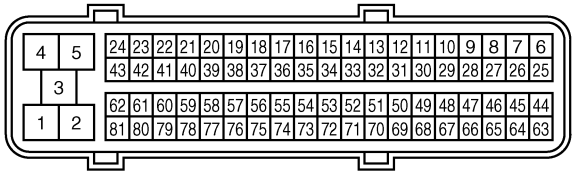

REFER TO THE FOLLOWING.
E201 -FUSE BLOCK-JUNCTION BOX (J/B)

TBWM0390E

Specification data are reference values and are measured between each terminal and ground.

CAUTION:

Do not use ECM ground terminals when measuring input/output voltage. Doing so may result in damage to the ECM's transistor. Use a ground other than ECM terminals, such as the ground.

TERMINAL NO.	WIRE COLOR	ITEM	CONDITION	DATA (DC Voltage)
16	G	A/F sensor 1 (Bank 1)	**[Engine is running]** ● **Warm-up condition** ● Idle speed	Approximately 3.1V
35	B/R			Approximately 2.6V
56	L			Approximately 2.3V
75	R/B			Approximately 2.3V

BANK 2

EC-AF1B2-01

: DETECTABLE LINE FOR DTC
: NON-DETECTABLE LINE FOR DTC

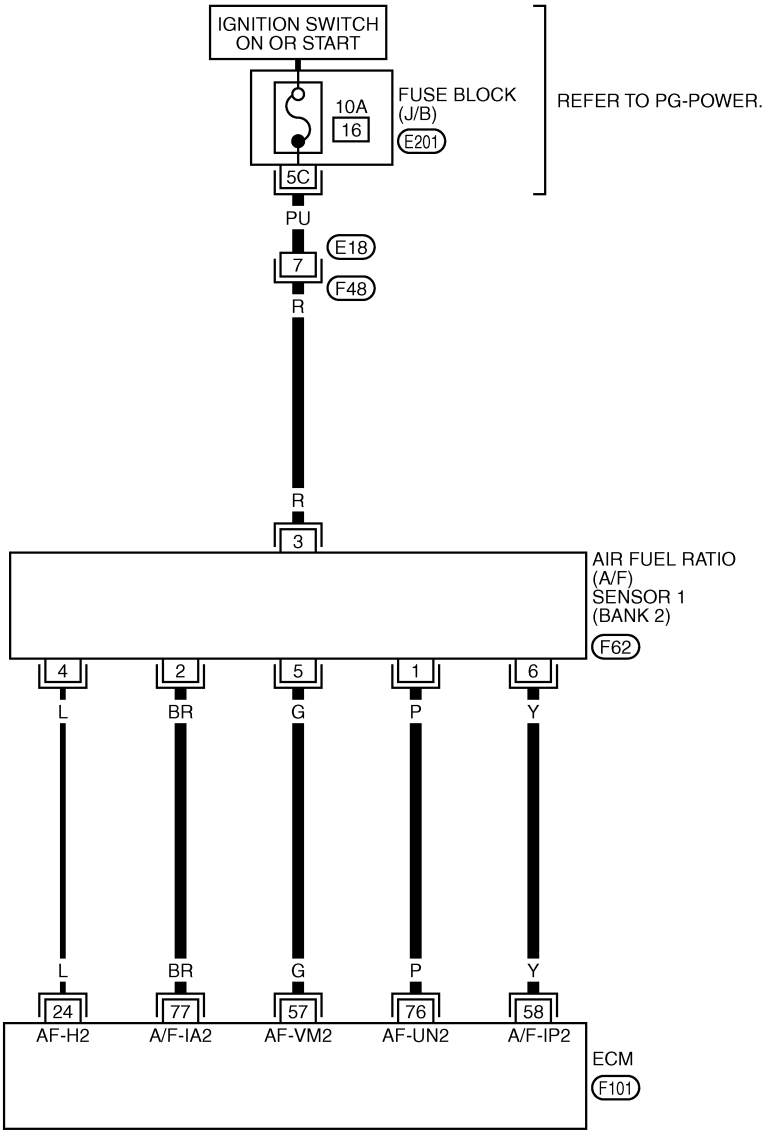

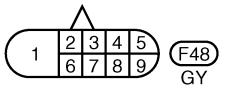

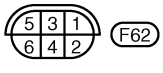

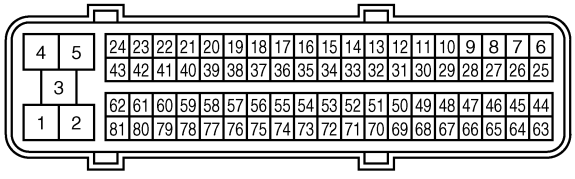

REFER TO THE FOLLOWING.
E201 -FUSE BLOCK-JUNCTION BOX (J/B)

TBWM0391E

Specification data are reference values and are measured between each terminal and ground.

CAUTION:
Do not use ECM ground terminals when measuring input/output voltage. Doing so may result in damage to the ECM's transistor. Use a ground other than ECM terminals, such as the ground.

TERMINAL NO.	WIRE COLOR	ITEM	CONDITION	DATA (DC Voltage)
57	G	A/F sensor 1 (Bank 2)	**[Engine is running]** ● **Warm-up condition** ● Idle speed	Approximately 2.6V
58	Y			Approximately 2.3V
76	P			Approximately 3.1V
77	BR			Approximately 2.3V

Diagnostic Procedure

ABS00AAJ

1. CHECK GROUND CONNECTIONS

1. Turn ignition switch OFF.
2. Loosen and retighten ground three screws on the body. Refer to EC-170, "Ground Inspection" .

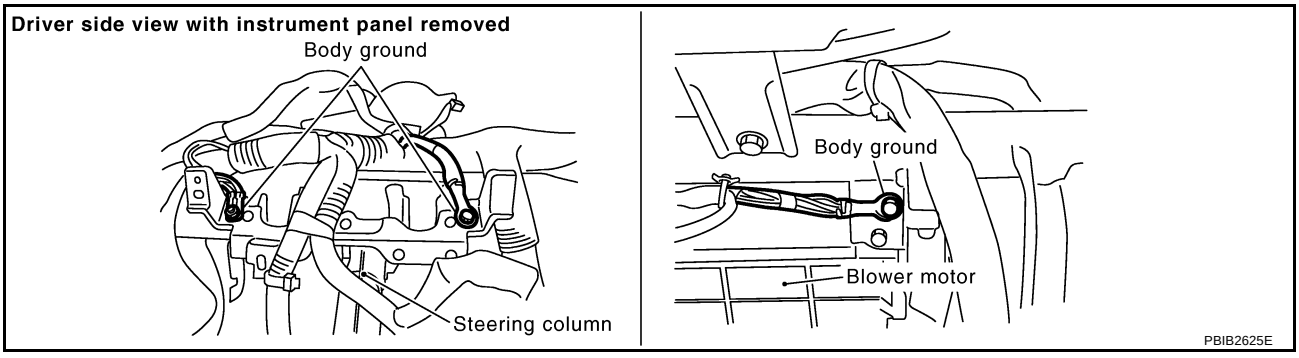

OK or NG

OK >> GO TO 2.
NG >> Repair or replace ground connections.

2. RETIGHTEN AIR FUEL RATIO (A/F) SENSOR 1

Loosen and retighten the air fuel ratio (A/F) sensor 1.

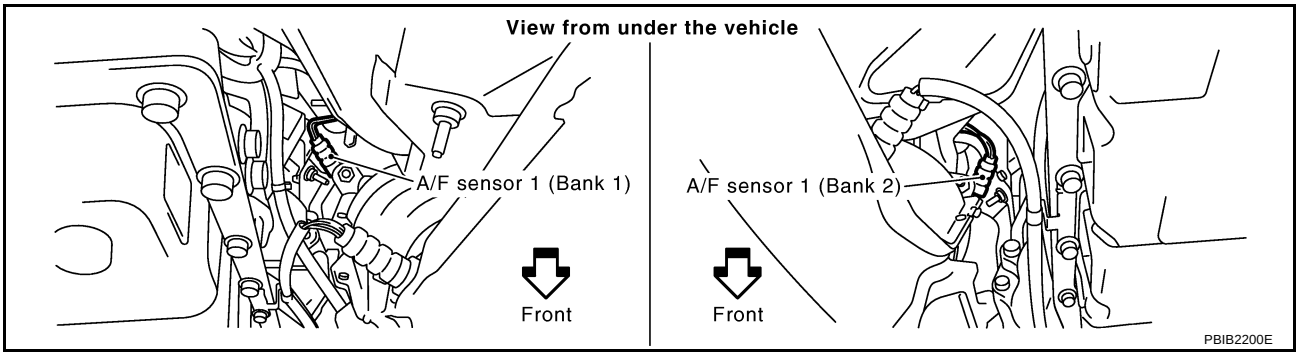

Tightening torque: 40 - 60 N-m (4.1 - 6.1 kg-m, 30 - 44 ft-lb)

>> GO TO 3.

3. CLEAR THE SELF-LEARNING DATA.

With CONSULT-II

1. Start engine and warm it up to normal operating temperature.
2. Select “SELF-LEARNING CONT” in “WORK SUPPORT” mode with CONSULT-II.
3. Clear the self-learning control coefficient by touching “CLEAR”.
4. Run engine for at least 10 minutes at idle speed.
   Is the 1st trip DTC P0172 or P0175 detected?
   Is it difficult to start engine?

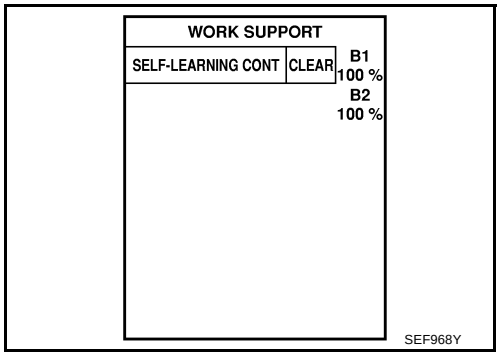

Without CONSULT-II

1. Start engine and warm it up to normal operating temperature.
2. Turn ignition switch OFF.
3. Disconnect mass air flow sensor harness connector.
4. Restart engine and let it idle for at least 5 seconds.
5. Stop engine and reconnect mass air flow sensor harness connector.
6. Make sure DTC P0102 is displayed.
7. Erase the DTC memory. Refer to EC-68, "HOW TO ERASE EMISSION-RELATED DIAGNOSTIC INFORMATION" .
8. Make sure DTC P0000 is displayed.
9. Run engine for at least 10 minutes at idle speed.
   Is the 1st trip DTC P0172 or P0175 detected?
   Is it difficult to start engine?

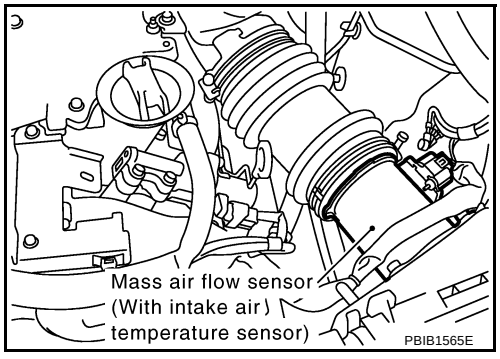

Yes or No

Yes >> Perform trouble diagnosis for DTC P0172 or P0175. Refer to EC-258, "DTC P0172, P0175 FUEL INJECTION SYSTEM FUNCTION" .

No >> GO TO 4.

4. CHECK HARNESS CONNECTOR

1. Turn ignition switch OFF.
2. Disconnect air fuel ratio (A/F) sensor 1 harness connector.

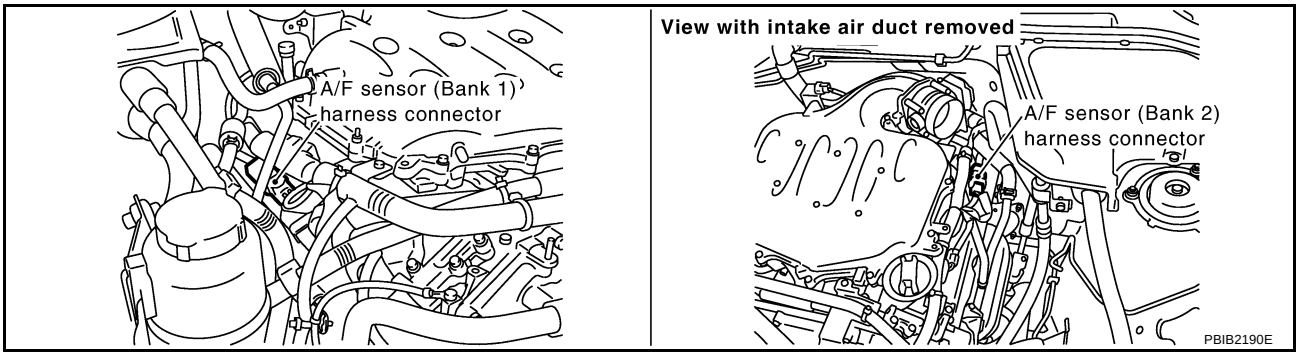

3. Check harness connector for water.
   Water should not exit.

OK or NG

OK >> GO TO 5.
NG >> Repair or replace harness connector.

5. CHECK AIR FUEL RATIO (A/F) SENSOR 1 POWER SUPPLY CIRCUIT

1. Turn ignition switch ON.
2. Check voltage between air fuel ratio (A/F) sensor 1 terminal 3 and ground with CONSULT-II or tester.

   Voltage: Battery voltage

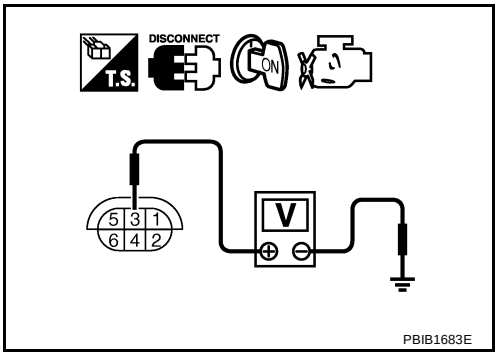

OK or NG

OK >> GO TO 7.
NG >> GO TO 6.

6. DETECT MALFUNCTIONING PART

Check the following.

- Harness connectors E18, F48
- Fuse block (J/B) connector E201
- 10A fuse
- Harness for open or short between air fuel ratio (A/F) sensor 1 and fuse

>> Repair or replace harness or connectors.

7. CHECK AIR FUEL RATIO (A/F) SENSOR 1 INPUT SIGNAL CIRCUIT

1. Turn ignition switch OFF.
2. Disconnect ECM harness connector.
3. Check harness continuity between the following terminals.
   Refer to Wiring Diagram.

	A/F sensor 1 terminal	ECM terminal
Bank1	1	16
	2	75
	5	35
	6	56
Bank 2	1	76
	2	77
	5	57
	6	58

Continuity should exist.

4. Check harness continuity between the following terminals and ground.
   Refer to Wiring Diagram.

Bank 1		Bank 2	
A/F sensor 1 terminal	ECM terminal	A/F sensor 1 terminal	ECM terminal
1	16	1	76
2	75	2	77
5	35	5	57
6	56	6	58

Continuity should not exist.

5. Also check harness for short to ground and short to power.

OK or NG

OK >> GO TO 8.
NG >> Repair open circuit or short to ground or short to power in harness or connectors.

8. CHECK AIR FUEL RATIO (A/F) SENSOR 1 HEATER

Refer to EC-412, "Component Inspection" .

OK or NG

OK >> GO TO 9.
NG >> Replace air fuel ratio (A/F) sensor 1.

9. CHECK INTERMITTENT INCIDENT

Perform EC-163, "TROUBLE DIAGNOSIS FOR INTERMITTENT INCIDENT" .

OK or NG

OK >> GO TO 10.
NG >> Repair or replace.

10. REPLACE AIR FUEL RATIO (A/F) SENSOR 1

Replace air fuel ratio (A/F) sensor 1.

CAUTION:

- **Discard any air fuel ratio (A/F) sensor which has been dropped from a height of more than 0.5 m (19.7 in) onto a hard surface such as a concrete floor; use a new one.**
- **Before installing new air fuel ratio (A/F) sensor, clean exhaust system threads using Heated Oxygen Sensor Thread Cleaner tool J-43897-18 or J-43897-12 and approved anti-seize lubricant.**

>> **INSPECTION END**

Removal and Installation

ABS00AAK

AIR FUEL RATIO (A/F) SENSOR 1

Refer to EM-26, "EXHAUST MANIFOLD AND THREE WAY CATALYST" .

DTC P1276, P1286 A/F SENSOR 1

PFP:22693

Component Description

ABS00AAL

The air fuel ratio (A/F) sensor is a planar dual-cell limit current sensor. The sensor element of the air fuel ratio (A/F) sensor is the combination of a Nernst concentration cell (sensor cell) with an oxygen-pump cell, which transports ions. It has a heater in the element.

The sensor is capable of precise measurement λ = 1, but also in the lean and rich range. Together with its control electronics, the sensor outputs a clear, continuous signal throughout a wide λ range (0.7 < λ < air).

The exhaust gas components diffuse through the diffusion gap at the electrode of the oxygen pump and Nernst concentration cell, where they are brought to thermodynamic balance.

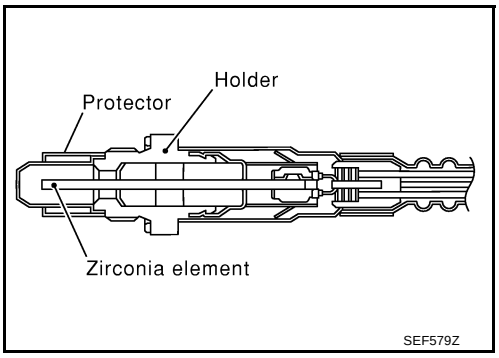

An electronic circuit controls the pump current through the oxygen-pump cell so that the composition of the exhaust gas in the diffusion gap remains constant at λ = 1. Therefore, the air fuel ratio (A/F) sensor is able to indicate air/fuel ratio by this pumping of current. In addition, a heater is integrated in the sensor to ensure the required operating temperature of 700 - 800°C (1,292 - 1,472°F).

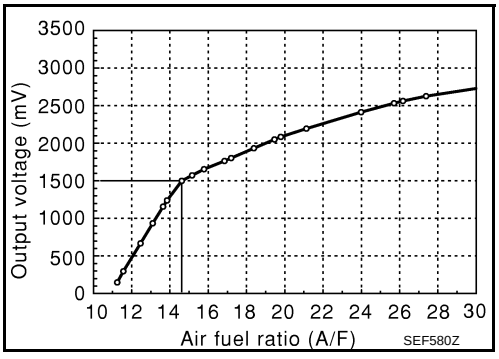

CONSULT-II Reference Value in Data Monitor Mode

ABS00AAM

Specification data are reference values.

MONITOR ITEM	CONDITION		SPECIFICATION
A/F SEN1 (B1) A/F SEN1 (B2)	● Engine: After warming up	Maintaining engine speed at 2,000 rpm	Fluctuates around 1.5V

On Board Diagnosis Logic

ABS00AAN

To judge the malfunction, the diagnosis checks that the A/F signal computed by ECM from the air fuel ratio (A/F) sensor 1 signal fluctuates according to fuel feedback control.

DTC No.	Trouble diagnosis name	DTC detecting condition	Possible Cause
P1276 1276 (Bank 1)	Air fuel ratio (A/F) sensor 1 circuit high voltage	● The A/F signal computed by ECM from the air fuel ratio (A/F) sensor 1 signal is constantly approx. 1.5V.	● Harness or connectors (The air fuel ratio (A/F) sensor 1 circuit is open or shorted.) ● Air fuel ratio (A/F) sensor 1
P1286 1286 (Bank 2)			

DTC Confirmation Procedure

ABS00AAO

CAUTION:
Always drive vehicle at a safe speed.

NOTE:
If DTC Confirmation Procedure has been previously conducted, always turn ignition switch OFF and wait at least 10 seconds before conducting the next test.

TESTING CONDITION:
Before performing the following procedure, confirm that battery voltage is more than 11V at idle.

WITH CONSULT-II

1. Start engine and warm it up to normal operating temperature.
2. Select “A/F SEN1 (B1)” or “A/F SEN1 (B2)” in “DATA MONITOR” mode with CONSULT-II.
3. Check “A/F SEN1 (B1)” or “A/F SEN1 (B2)” indication.

If the indication is constantly approx. 1.5V and does not fluctuates, go to EC-532, "Diagnostic Procedure" .
If the indication fluctuates around 1.5V, go to next step.

4. Select “A/F SEN1 (B1) P1276” or “A/F SEN1 (B2) P1286” of “A/F SEN1” in “DTC WORK SUPPORT” mode with CONSULT-II.
5. Touch “START”.
6. When the following conditions are met, “TESTING” will be displayed on the CONSULT-II screen.

ENG SPEED	1,100 - 3,200 rpm
VHCL SPEED SE	More than 64 km/h (40 MPH)
B/FUEL SCHDL	1.0 - 8.0 msec
Selector lever	D position

If “TESTING” is not displayed after 20 seconds, retry from step 2.

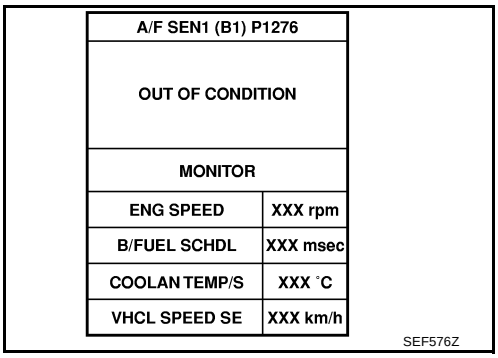

7. Release accelerator pedal fully.
   NOTE:
   Never apply brake during releasing the accelerator pedal.

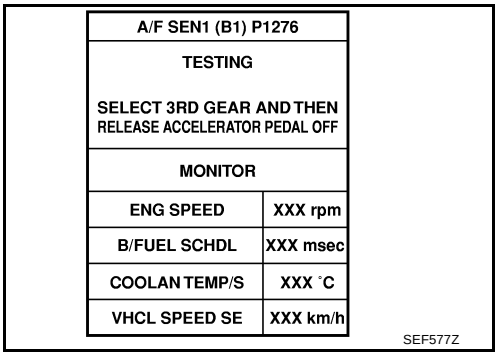

8. Make sure that “TESTING” changes to “COMPLETED”.
   If “TESTING” changed to “OUT OF CONDITION”, retry from step 6.
9. Make sure that “OK” is displayed after touching “SELF-DIAG RESULT”.
   If “NG” is displayed, go to EC-532, "Diagnostic Procedure" .

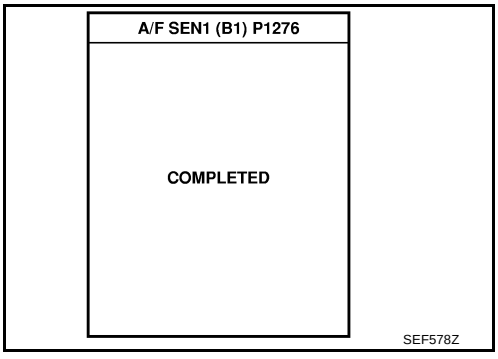

Overall Function Check

ABS00AAP

Use this procedure to check the overall function of the air fuel ratio (A/F) sensor 1 circuit.During this check, a 1st trip DTC might not be confirmed.

WITH GST

1. Start engine and warm it up to normal operating temperature.
2. Drive the vehicle at a speed of 80 km/h (50 MPH) for a few minutes in the suitable gear position.
3. Set D position, then release the accelerator pedal fully until the vehicle speed decreases to 50 km/h (30 MPH).
   NOTE:
   Never apply brake during releasing the accelerator pedal.
4. Repeat steps 2 to 3 for 5 times.
5. Stop the vehicle and turn ignition switch OFF.
6. Wait at least 10 seconds and restart engine.
7. Repeat steps 2 to 3 for 5 times.

8. Stop the vehicle and connect GST to the vehicle.
9. Make sure that no DTC is displayed.
   If the DTC is displayed, go to EC-532, "Diagnostic Procedure" .

Wiring Diagram
BANK 1

ABS00AAQ

EC-AF1B1-01

: DETECTABLE LINE FOR DTC
: NON-DETECTABLE LINE FOR DTC

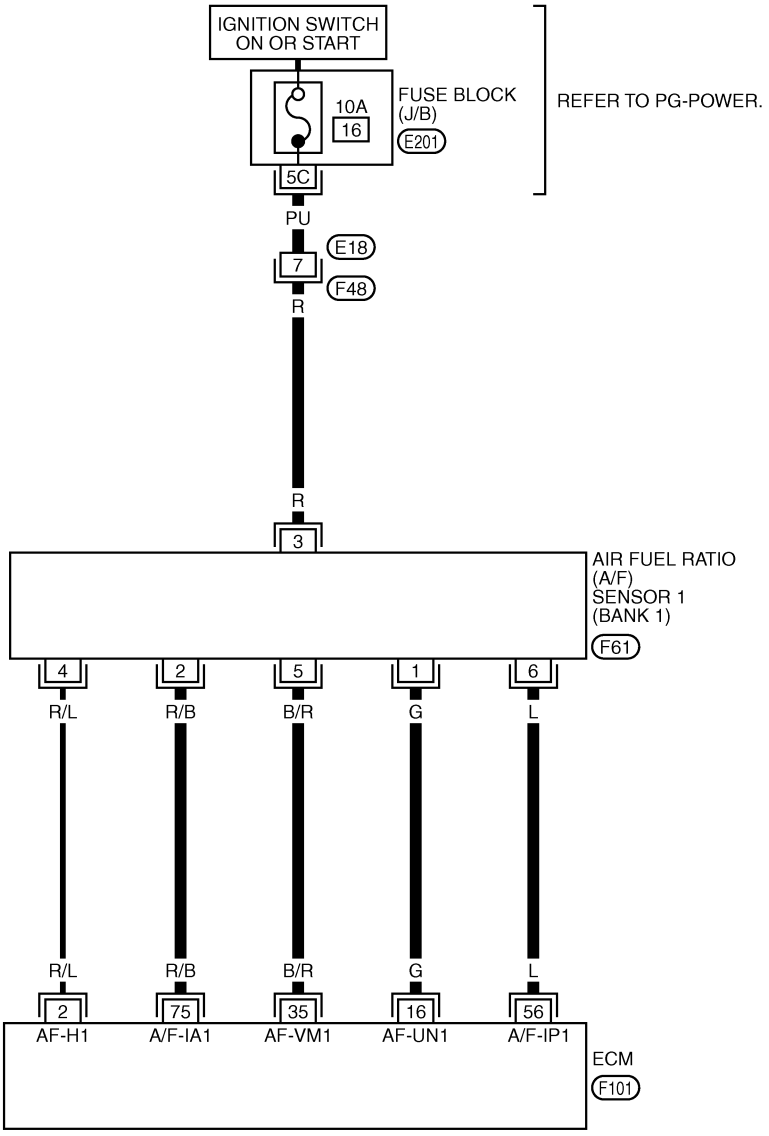

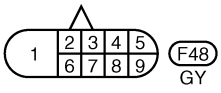

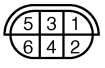

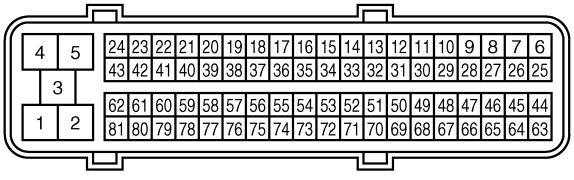

REFER TO THE FOLLOWING.
E201 -FUSE BLOCK-JUNCTION BOX (J/B)

TBWM0390E

Specification data are reference values and are measured between each terminal and ground.

CAUTION:

Do not use ECM ground terminals when measuring input/output voltage. Doing so may result in damage to the ECM's transistor. Use a ground other than ECM terminals, such as the ground.

TERMINAL NO.	WIRE COLOR	ITEM	CONDITION	DATA (DC Voltage)
16	G	A/F sensor 1 (Bank 1)	**[Engine is running]** ● **Warm-up condition** ● Idle speed	Approximately 3.1V
35	B/R			Approximately 2.6V
56	L			Approximately 2.3V
75	R/B			Approximately 2.3V

BANK 2

EC-AF1B2-01

: DETECTABLE LINE FOR DTC
: NON-DETECTABLE LINE FOR DTC

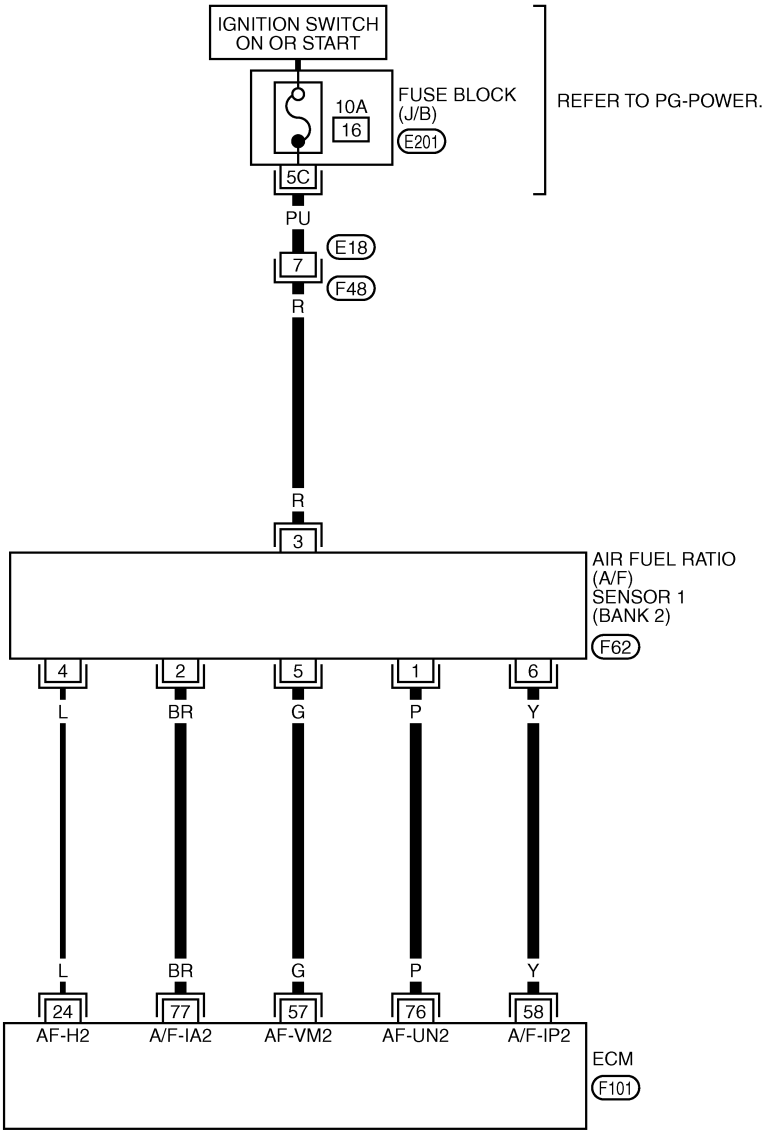

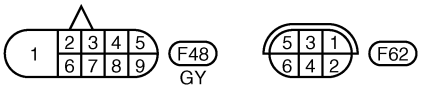

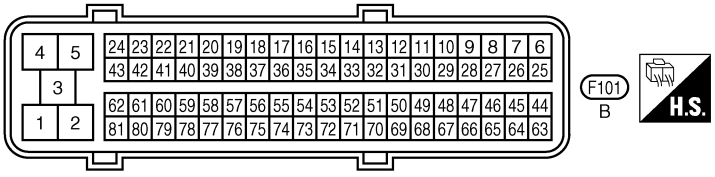

REFER TO THE FOLLOWING.
E201 -FUSE BLOCK-JUNCTION BOX (J/B)

TBWM0391E

Specification data are reference values and are measured between each terminal and ground.

CAUTION:

Do not use ECM ground terminals when measuring input/output voltage. Doing so may result in damage to the ECM's transistor. Use a ground other than ECM terminals, such as the ground.

TERMINAL NO.	WIRE COLOR	ITEM	CONDITION	DATA (DC Voltage)
57	G	A/F sensor 1 (Bank 2)	**[Engine is running]** ● **Warm-up condition** ● Idle speed	Approximately 2.6V
58	Y			Approximately 2.3V
76	P			Approximately 3.1V
77	BR			Approximately 2.3V

Diagnostic Procedure

ABS00AAR

1. CHECK GROUND CONNECTIONS

1. Turn ignition switch OFF.
2. Loosen and retighten ground three screws on the body. Refer to EC-170, "Ground Inspection" .

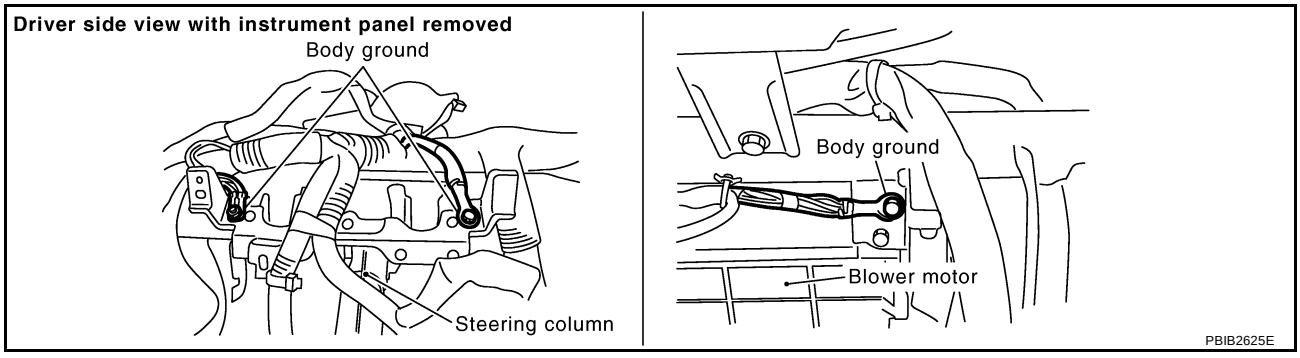

OK or NG

OK >> GO TO 2.
NG >> Repair or replace ground connections.

2. CHECK AIR FUEL RATIO (A/F) SENSOR 1 POWER SUPPLY CIRCUIT

1. Disconnect air fuel ratio (A/F) sensor 1 harness connector.

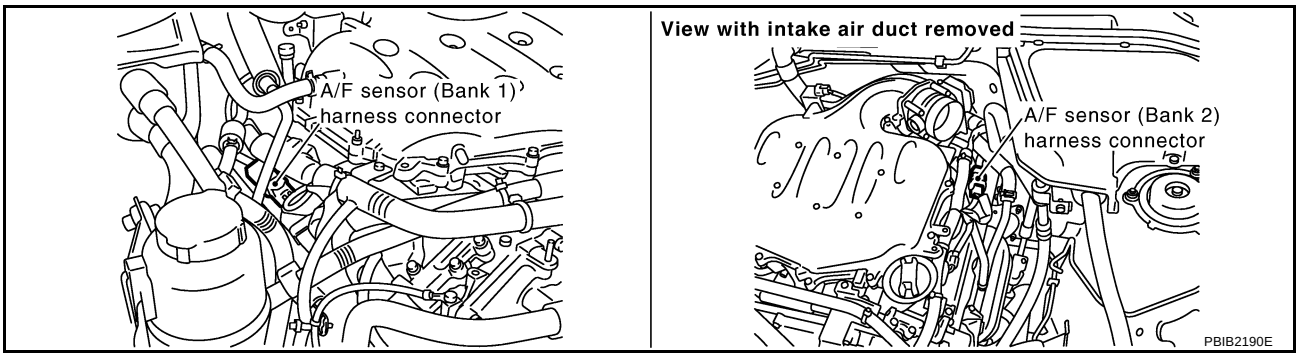

2. Turn ignition switch ON.
3. Check voltage between air fuel ratio (A/F) sensor 1 terminal 3 and ground with CONSULT-II or tester.

Voltage: Battery voltage

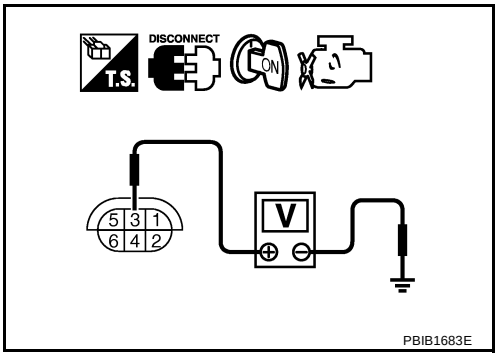

OK or NG

OK >> GO TO 4.
NG >> GO TO 3.

3. DETECT MALFUNCTIONING PART

Check the following.

- Harness connectors E18, F48
- Fuse block (J/B) connector E201
- 10A fuse
- Harness for open or short between air fuel ratio (A/F) sensor 1 and fuse

>> Repair or replace harness or connectors.

4. CHECK AIR FUEL RATIO (A/F) SENSOR 1 INPUT SIGNAL CIRCUIT

1. Turn ignition switch OFF.
2. Disconnect ECM harness connector.
3. Check harness continuity between the following terminals.
   Refer to Wiring Diagram.

	A/F sensor 1 terminal	ECM terminal
Bank1	1	16
	2	75
	5	35
	6	56
Bank 2	1	76
	2	77
	5	57
	6	58

Continuity should exist.

4. Check harness continuity between the following terminals and ground.
   Refer to Wiring Diagram.

Bank 1		Bank 2	
A/F sensor 1 terminal	ECM terminal	A/F sensor 1 terminal	ECM terminal
1	16	1	76
2	75	2	77
5	35	5	57
6	56	6	58

Continuity should not exist.

5. Also check harness for short to ground and short to power.

OK or NG

OK >> GO TO 5.
NG >> Repair open circuit or short to ground or short to power in harness or connectors.

5. CHECK INTERMITTENT INCIDENT

Perform EC-163, "TROUBLE DIAGNOSIS FOR INTERMITTENT INCIDENT" .

OK or NG

OK >> GO TO 6.
NG >> Repair or replace.

6. REPLACE AIR FUEL RATIO (A/F) SENSOR 1

Replace air fuel ratio (A/F) sensor 1.

CAUTION:

- **Discard any air fuel ratio (A/F) sensor which has been dropped from a height of more than 0.5 m (19.7 in) onto a hard surface such as a concrete floor; use a new one.**
- **Before installing new air fuel ratio (A/F) sensor, clean exhaust system threads using Heated Oxygen Sensor Thread Cleaner tool J-43897-18 or J-43897-12 and approved anti-seize lubricant.**

>> **INSPECTION END**

Removal and Installation

ABS00AAS

AIR FUEL RATIO (A/F) SENSOR 1

Refer to EM-26, "EXHAUST MANIFOLD AND THREE WAY CATALYST" .

DTC P1278, P1288 A/F SENSOR 1

PFP:22693

Component Description

ABS00AAT

The air fuel ratio (A/F) sensor 1 is a planar dual-cell limit current sensor. The sensor element of the air fuel ratio (A/F) sensor 1 is the combination of a Nernst concentration cell (sensor cell) with an oxygen-pump cell, which transports ions. It has a heater in the element.
The sensor is capable of precise measurement λ = 1, but also in the lean and rich range. Together with its control electronics, the sensor outputs a clear, continuous signal throughout a wide λ range (0.7 < λ < air).
The exhaust gas components diffuse through the diffusion gap at the electrode of the oxygen pump and Nernst concentration cell, where they are brought to thermodynamic balance.

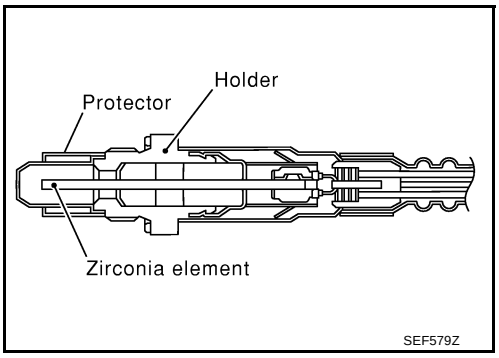

An electronic circuit controls the pump current through the oxygen-pump cell so that the composition of the exhaust gas in the diffusion gap remains constant at λ = 1. Therefore, the air fuel ratio (A/F) sensor 1 is able to indicate air/fuel ratio by this pumping of current. In addition, a heater is integrated in the sensor to ensure the required operating temperature of 700 - 800°C (1,292 - 1,472°F).

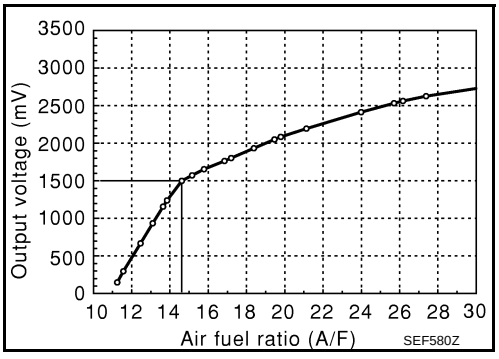

CONSULT-II Reference Value in Data Monitor Mode

ABS00AAU

Specification data are reference values.

MONITOR ITEM	CONDITION		SPECIFICATION
A/F SEN1 (B1) A/F SEN1 (B2)	● Engine: After warming up	Maintaining engine speed at 2,000 rpm	Fluctuates around 1.5V

On Board Diagnosis Logic

ABS00AAV

To judge the malfunction of air fuel ratio (A/F) sensor 1, this diagnosis measures response time of the A/F signal computed by ECM from the air fuel ratio (A/F) sensor 1 signal. The time is compensated by engine operating (speed and load), fuel feedback control constant, and the air fuel ratio (A/F) sensor 1 temperature index. Judgment is based on whether the compensated time (the A/F signal cycling time index) is inordinately long or not.

DTC No.	Trouble diagnosis name	DTC detecting condition	Possible Cause
P1278 1278 (Bank 1)	Air fuel ratio (A/F) sensor 1 circuit slow response	● The response (from RICH to LEAN) of the A/F signal computed by ECM from air fuel ratio (A/F) sensor 1 signal takes more than the specified time.	● Harness or connectors (The air fuel ratio (A/F) sensor 1 circuit is open or shorted.) ● Air fuel ratio (A/F) sensor 1 ● Air fuel ratio (A/F) sensor 1 heater ● Fuel pressure ● Fuel injector ● Intake air leaks ● Exhaust gas leaks ● PCV ● Mass air flow sensor
P1288 1288 (Bank 2)			

DTC Confirmation Procedure

ABS00AAW

NOTE:
If DTC Confirmation Procedure has been previously conducted, always turn ignition switch OFF and wait at least 10 seconds before conducting the next test.
TESTING CONDITION:
Before performing the following procedure, confirm that battery voltage is more than 11V at idle.

WITH CONSULT-II

1. Start engine and warm it up to normal operating temperature.
2. Turn ignition switch OFF and wait at least 10 seconds.
3. Start engine and keep the engine speed between 3,500 and 4,000 rpm for at least 1minute under no load.
4. Let engine idle for 1 minute.
5. Select “A/F SEN1(B1) P1278/P1279” or “A/F SEN1(B1) P1288/P1289” of “A/F SEN1” in “DTC WORK SUPPORT” mode with CONSULT-II.
6. Touch “START”.
   If “COMPLETED” appears on CONSULT-II screen, go to step 10.
   If “COMPLETED” does not appear on CONSULT-II screen, go to the following step.

A/F SEN1 (B1) P1278/P1279	
OUT OF CONDITION	
MONITOR	
ENG SPEED	XXX rpm
B/FUEL SCHDL	XXX msec
COOLAN TEMP/S	XXX °C
VHCL SPEED SE	XXX km/h

PBIB0756E

7. After perform the following procedure, “TESTING” will be displayed on the CONSULT-II screen.

a. Increase the engine speed up to 4,000 to 5,000 rpm and keep it for 10 seconds.

b. Fully release accelerator pedal and then let engine idle for about 10 seconds.
   If “TESTING” is not displayed after 10 seconds, refer to EC-153, "TROUBLE DIAGNOSIS - SPECIFICATION VALUE" .

8. Wait for about 20 seconds at idle at under the condition that “TESTING” is displayed on the CONSULT-II screen.

A/F SEN1 (B1) P1278/P1279	
TESTING	
MONITOR	
ENG SPEED	XXX rpm
B/FUEL SCHDL	XXX msec
COOLAN TEMP/S	XXX °C
VHCL SPEED SE	XXX km/h

PBIB1925E

9. Make sure that “TESTING” changes to “COMPLETED”.
   If “TESTING” changed to “OUT OF CONDITION”, refer to EC-153, "TROUBLE DIAGNOSIS - SPECIFICATION VALUE" .
10. Make sure that “OK” is displayed after touching “SELF-DIAG RESULT”.
    If “NG” is displayed, go to EC-542, "Diagnostic Procedure" .

A/F SEN1 (B1) P1278/P1279
COMPLETED

PBIB0758E

WITH GST

1. Start engine and warm it up to normal operating temperature.
2. Select Service $01 with GST.
3. Calculate the total value of “Short term fuel trim” and “Long term fuel trim” indications.
   Make sure that the total percentage should be within ±15%.
   If OK, go to the following step.
   If NG, check the following.

- Intake air leaks
- Exhaust gas leaks
- Incorrect fuel pressure
- Lack of fuel
- Fuel Injector
- Incorrect PCV hose connection
- PCV valve
- Mass air flow sensor

4. Turn ignition switch OFF and wait at least 10 seconds.
5. Start engine and keep the engine speed between 3,500 and 4,000 rpm for at least 1minute under no load.
6. Let engine idle for 1 minute.
7. Increase the engine speed up to 4,000 to 5,000 rpm and keep it for 10 seconds.
8. Fully release accelerator pedal and then let engine idle for about 1 minute.
9. Select Service $07 with GST and make sure that no DTC is displayed.
   If the DTC is displayed, go to EC-542, "Diagnostic Procedure" .

Wiring Diagram
BANK 1

ABS00AAX

EC-AF1B1-01

: DETECTABLE LINE FOR DTC
: NON-DETECTABLE LINE FOR DTC

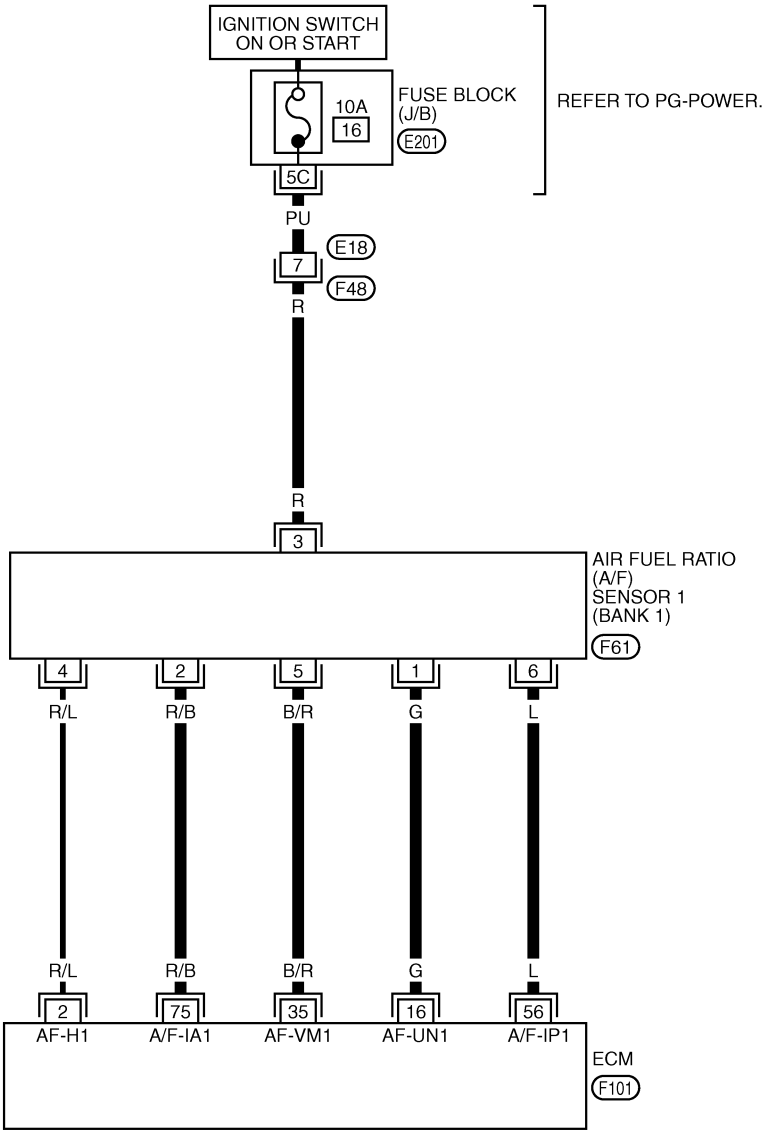

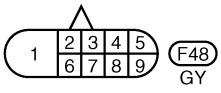

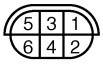

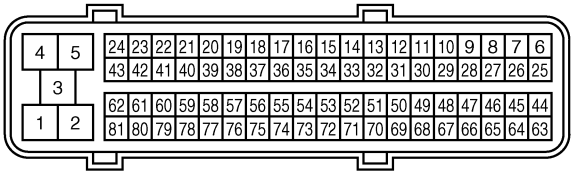

REFER TO THE FOLLOWING.
E201 -FUSE BLOCK-JUNCTION BOX (J/B)

TBWM0390E

Specification data are reference values and are measured between each terminal and ground.

CAUTION:

Do not use ECM ground terminals when measuring input/output voltage. Doing so may result in damage to the ECM's transistor. Use a ground other than ECM terminals, such as the ground.

TERMINAL NO.	WIRE COLOR	ITEM	CONDITION	DATA (DC Voltage)
16	G	A/F sensor 1 (Bank 1)	**[Engine is running]** ● **Warm-up condition** ● Idle speed	Approximately 3.1V
35	B/R			Approximately 2.6V
56	L			Approximately 2.3V
75	R/B			Approximately 2.3V

BANK 2

EC-AF1B2-01

: DETECTABLE LINE FOR DTC
: NON-DETECTABLE LINE FOR DTC

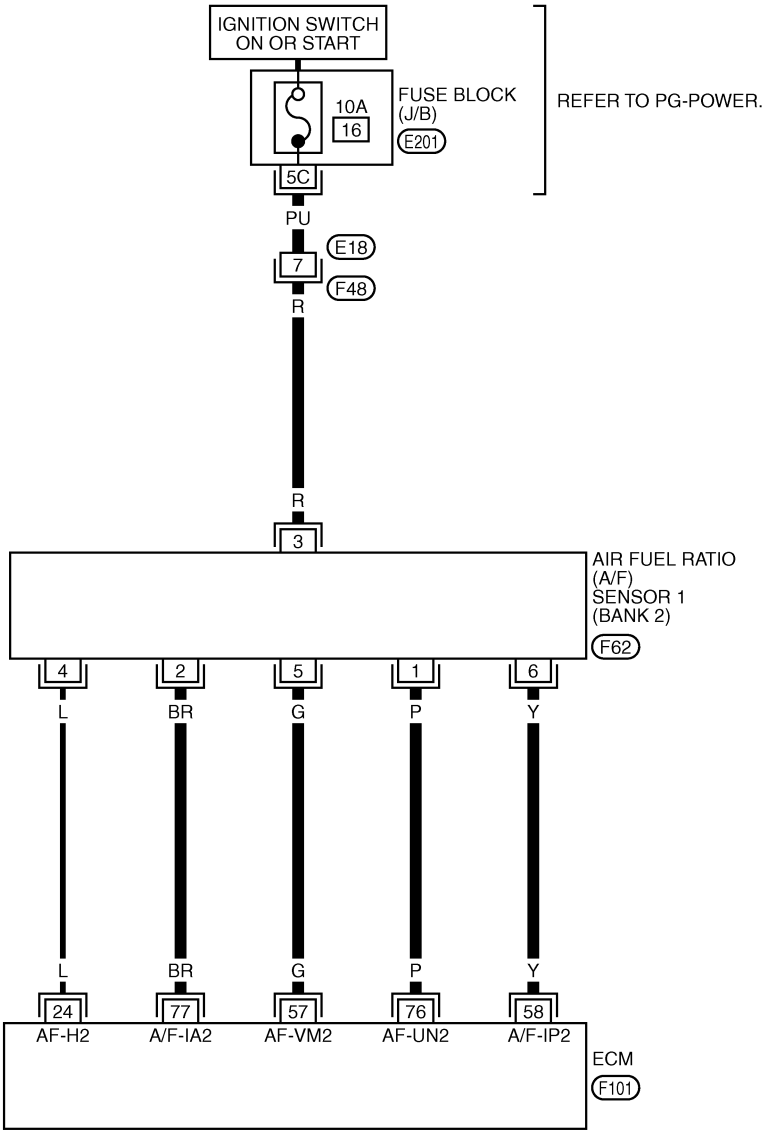

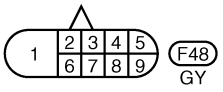

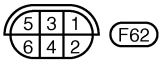

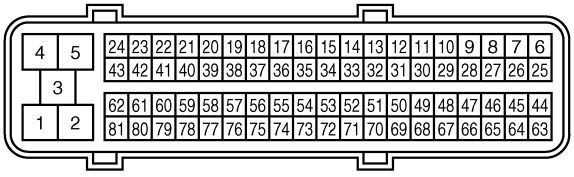

REFER TO THE FOLLOWING.
E201 -FUSE BLOCK-JUNCTION BOX (J/B)

TBWM0391E

Specification data are reference values and are measured between each terminal and ground.

CAUTION:

Do not use ECM ground terminals when measuring input/output voltage. Doing so may result in damage to the ECM's transistor. Use a ground other than ECM terminals, such as the ground.

TERMINAL NO.	WIRE COLOR	ITEM	CONDITION	DATA (DC Voltage)
57	G	A/F sensor 1 (Bank 2)	**[Engine is running]** ● **Warm-up condition** ● Idle speed	Approximately 2.6V
58	Y			Approximately 2.3V
76	P			Approximately 3.1V
77	BR			Approximately 2.3V

Diagnostic Procedure

ABS00AAY

1. CHECK GROUND CONNECTIONS

1. Turn ignition switch OFF.
2. Loosen and retighten ground three screws on the body. Refer to EC-170, "Ground Inspection" .

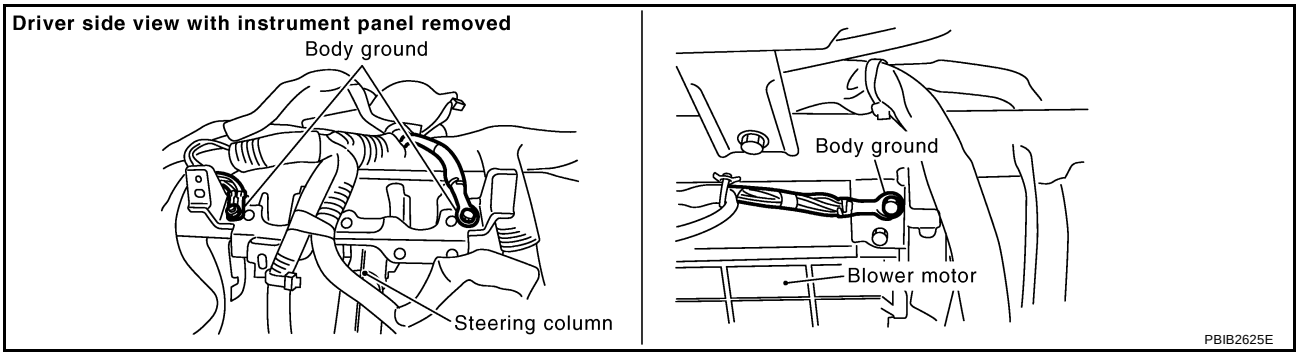

OK or NG

OK >> GO TO 2.
NG >> Repair or replace ground connections.

2. RETIGHTEN AIR FUEL RATIO (A/F) SENSOR 1

Loosen and retighten the air fuel ratio (A/F) sensor 1.

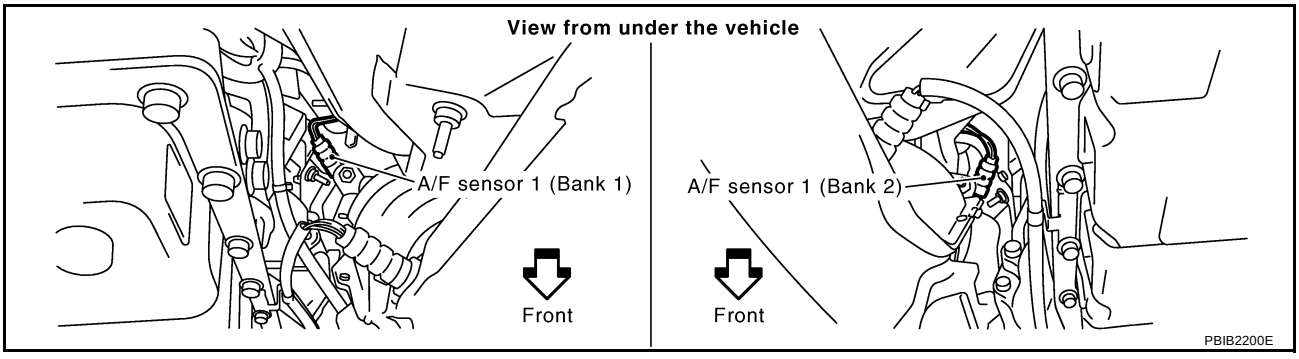

Tightening torque: 40 - 60 N-m (4.1 - 6.1 kg-m, 30 - 44 ft-lb)

>> GO TO 3.

3. CHECK EXHAUST GAS LEAK

1. Start engine and run it at idle.
2. Listen for an exhaust gas leak before three way catalyst 1.

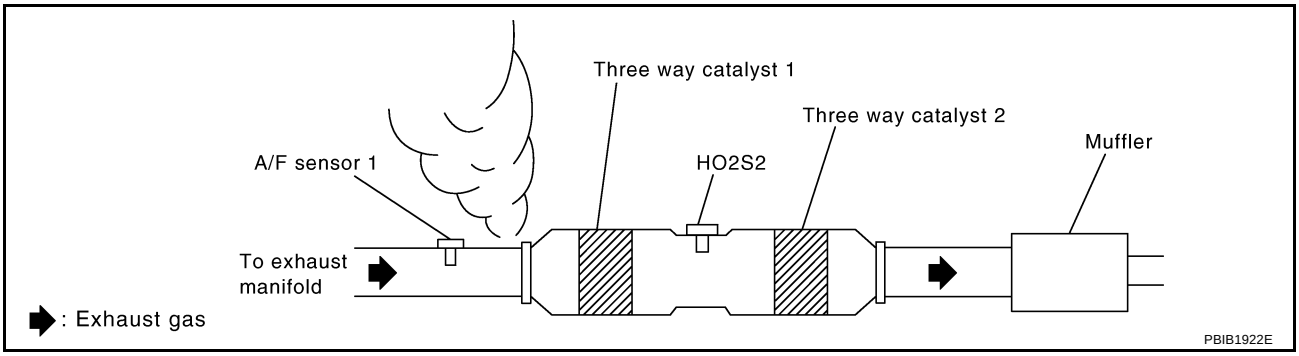

OK or NG

OK >> GO TO 4.
NG >> Repair or replace.

4. CHECK FOR INTAKE AIR LEAK

Listen for an intake air leak after the mass air flow sensor.

OK or NG

OK >> GO TO 5.
NG >> Repair or replace.

5. CLEAR THE SELF-LEARNING DATA

With CONSULT-II

1. Start engine and warm it up to normal operating temperature.
2. Select “SELF-LEARNING CONT” in “WORK SUPPORT” mode with CONSULT-II.
3. Clear the self-learning control coefficient by touching “CLEAR” or “START”.
4. Run engine for at least 10 minutes at idle speed.
   Is the 1st trip DTC P0171, P172, P0174 or P0175 detected?
   Is it difficult to start engine?

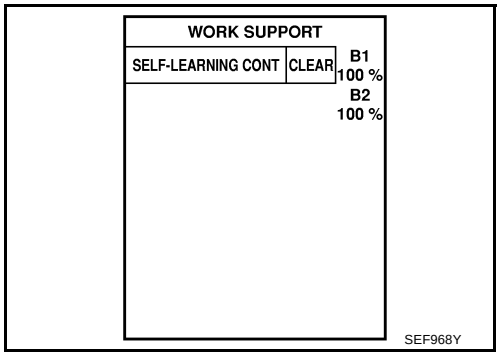

Without CONSULT-II

1. Start engine and warm it up to normal operating temperature.
2. Turn ignition switch OFF.
3. Disconnect mass air flow sensor harness connector.
4. Restart engine and let it idle for at least 5 seconds.
5. Stop engine and reconnect mass air flow sensor harness connector.
6. Make sure DTC P0102 is displayed.
7. Erase the DTC memory. Refer to EC-68, "HOW TO ERASE EMISSION-RELATED DIAGNOSTIC INFORMATION" .
8. Make sure DTC P0000 is displayed.
9. Run engine for at least 10 minutes at idle speed.
   Is the 1st trip DTC P0171, P0172, P0174 or P0175 detected?
   Is it difficult to start engine?

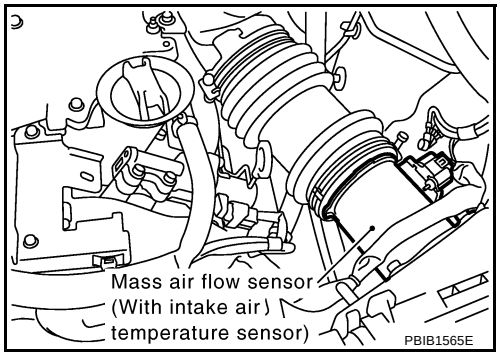

Yes or No

Yes >> Perform trouble diagnosis for DTC P0171, P0174 or P0172, P0175. Refer to EC-248, "DTC P0171, P0174 FUEL INJECTION SYSTEM FUNCTION" or EC-258, "DTC P0172, P0175 FUEL INJECTION SYSTEM FUNCTION" .

No >> GO TO 6.

6. CHECK AIR FUEL RATIO (A/F) SENSOR 1 POWER SUPPLY CIRCUIT

1. Turn ignition switch OFF.
2. Disconnect air fuel ratio (A/F) sensor 1 harness connector.

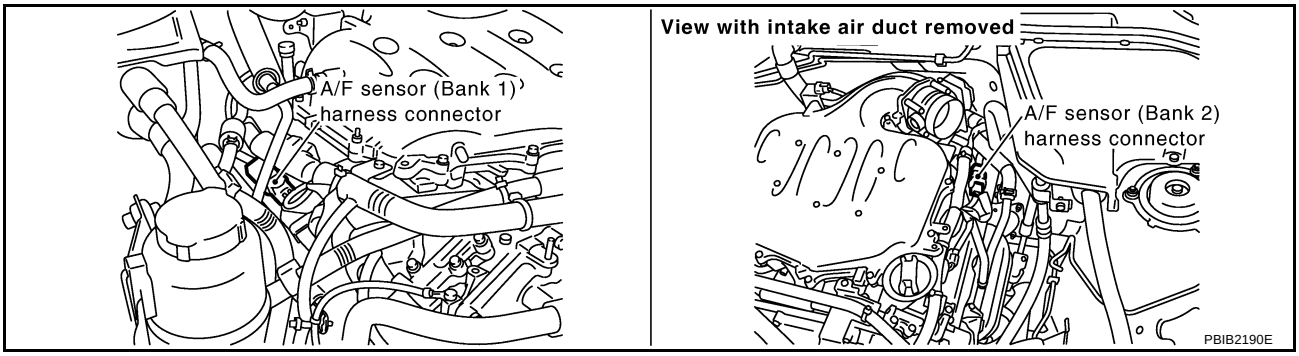

3. Turn ignition switch ON.
4. Check voltage between air fuel ratio (A/F) sensor 1 terminal 3 and ground with CONSULT-II or tester.

Voltage: Battery voltage

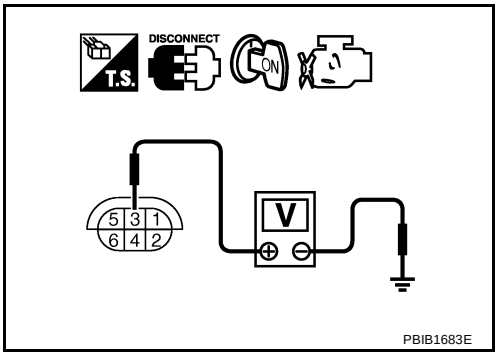

OK or NG

OK >> GO TO 8.
NG >> GO TO 7.

7. DETECT MALFUNCTIONING PART

Check the following.

- Harness connectors E18, F48
- Fuse block (J/B) connector E201
- 10A fuse
- Harness for open or short between air fuel ratio (A/F) sensor 1 and fuse

>> Repair or replace harness or connectors.

8. CHECK AIR FUEL RATIO (A/F) SENSOR 1 INPUT SIGNAL CIRCUIT FOR OPEN AND SHORT

1. Turn ignition switch OFF.
2. Disconnect ECM harness connector.
3. Check harness continuity between the following terminals.
   Refer to Wiring Diagram.

	A/F sensor 1 terminal	ECM terminal
Bank1	1	16
	2	75
	5	35
	6	56
Bank 2	1	76
	2	77
	5	57
	6	58

Continuity should exist.

4. Check harness continuity between the following terminals and ground.
   Refer to Wiring Diagram.

Bank 1		Bank 2	
A/F sensor 1 terminal	ECM terminal	A/F sensor 1 terminal	ECM terminal
1	16	1	76
2	75	2	77
5	35	5	57
6	56	6	58

Continuity should not exist.

5. Also check harness for short to ground and short to power.

OK or NG

OK >> GO TO 9.
NG >> Repair open circuit or short to ground or short to power in harness or connectors.

9. CHECK AIR FUEL RATIO (A/F) SENSOR 1 HEATER

Refer to EC-412, "Component Inspection" .

OK or NG

OK >> GO TO 10.
NG >> Replace air fuel ratio (A/F) sensor 1.

10. CHECK MASS AIR FLOW SENSOR

Refer to EC-193, "Component Inspection" .

OK or NG

OK >> GO TO 11.
NG >> Replace mass air flow sensor.

11. CHECK PCV VALVE

Refer to EC-51, "POSITIVE CRANKCASE VENTILATION" .

OK or NG

OK >> GO TO 12.
NG >> Repair or replace PCV valve.

12. CHECK INTERMITTENT INCIDENT

Perform EC-163, "TROUBLE DIAGNOSIS FOR INTERMITTENT INCIDENT" .

OK or NG

OK >> GO TO 13.
NG >> Repair or replace.

13. REPLACE AIR FUEL RATIO (A/F) SENSOR 1

Replace air fuel ratio (A/F) sensor 1.

CAUTION:

- **Discard any air fuel ratio (A/F) sensor which has been dropped from a height of more than 0.5 m (19.7 in) onto a hard surface such as a concrete floor; use a new one.**
- **Before installing new air fuel ratio (A/F) sensor, clean exhaust system threads using Heated Oxygen Sensor Thread Cleaner tool J-43897-18 or J-43897-12 and approved anti-seize lubricant.**

>> **INSPECTION END**

Removal and Installation

ABS00AAZ

AIR FUEL RATIO (A/F) SENSOR 1

Refer to EM-26, "EXHAUST MANIFOLD AND THREE WAY CATALYST" .

DTC P1279, P1289 A/F SENSOR 1

PFP:22693

Component Description

ABS00AB0

The air fuel ratio (A/F) sensor 1 is a planar dual-cell limit current sensor. The sensor element of the air fuel ratio (A/F) sensor 1 is the combination of a Nernst concentration cell (sensor cell) with an oxygen-pump cell, which transports ions. It has a heater in the element.
The sensor is capable of precise measurement λ = 1, but also in the lean and rich range. Together with its control electronics, the sensor outputs a clear, continuous signal throughout a wide λ range (0.7 < λ < air).
The exhaust gas components diffuse through the diffusion gap at the electrode of the oxygen pump and Nernst concentration cell, where they are brought to thermodynamic balance.

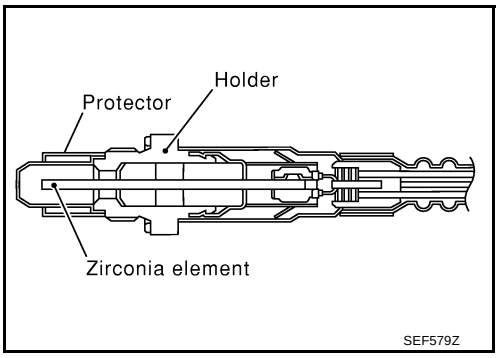

An electronic circuit controls the pump current through the oxygen-pump cell so that the composition of the exhaust gas in the diffusion gap remains constant at λ = 1. Therefore, the air fuel ratio (A/F) sensor 1 is able to indicate air/fuel ratio by this pumping of current. In addition, a heater is integrated in the sensor to ensure the required operating temperature of 700 - 800°C (1,292 - 1,472°F).

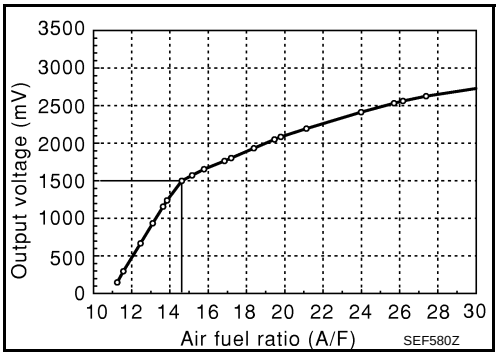

CONSULT-II Reference Value in Data Monitor Mode

ABS00AB1

Specification data are reference values.

MONITOR ITEM	CONDITION		SPECIFICATION
A/F SEN1 (B1) A/F SEN1 (B2)	● Engine: After warming up	Maintaining engine speed at 2,000 rpm	Fluctuates around 1.5V

On Board Diagnosis Logic

ABS00AB2

To judge the malfunction of air fuel ratio (A/F) sensor 1, this diagnosis measures response time of the A/F signal computed by ECM from the air fuel ratio (A/F) sensor 1 signal. The time is compensated by engine operating (speed and load), fuel feedback control constant, and the air fuel ratio (A/F) sensor 1 temperature index. Judgment is based on whether the compensated time (the A/F signal cycling time index) is inordinately long or not.

DTC No.	Trouble diagnosis name	DTC detecting condition	Possible Cause
P1279 1279 (Bank 1)	Air fuel ratio (A/F) sensor 1 circuit slow response	● The response (from LEAN to RICH) of the A/F signal computed by ECM from air fuel ratio (A/F) sensor 1 signal takes more than the specified time.	● Harness or connectors (The air fuel ratio (A/F) sensor 1 circuit is open or shorted.) ● Air fuel ratio (A/F) sensor 1 ● Air fuel ratio (A/F) sensor 1 heater ● Fuel pressure ● Fuel Injector ● Intake air leaks ● Exhaust gas leaks ● PCV ● Mass air flow sensor
P1289 1289 (Bank 2)			

DTC Confirmation Procedure

ABS00AB3

NOTE:
If DTC Confirmation Procedure has been previously conducted, always turn ignition switch OFF and wait at least 10 seconds before conducting the next test.
TESTING CONDITION:
Before performing the following procedure, confirm that battery voltage is more than 11V at idle.

WITH CONSULT-II

1. Start engine and warm it up to normal operating temperature.
2. Turn ignition switch OFF and wait at least 10 seconds.
3. Start engine and keep the engine speed between 3,500 and 4,000 rpm for at least 1minute under no load.
4. Let engine idle for 1 minute.
5. Select “A/F SEN1(B1) P1278/P1279” or “A/F SEN1(B1) P1288/P1289” of “A/F SEN1” in “DTC WORK SUPPORT” mode with CONSULT-II.
6. Touch “START”.
   If “COMPLETED” appears on CONSULT-II screen, go to step 10.
   If “COMPLETED” does not appear on CONSULT-II screen, go to the following step.

A/F SEN1 (B1) P1278/P1279	
OUT OF CONDITION	
MONITOR	
ENG SPEED	XXX rpm
B/FUEL SCHDL	XXX msec
COOLAN TEMP/S	XXX °C
VHCL SPEED SE	XXX km/h

PBIB0756E

7. After perform the following procedure, “TESTING” will be displayed on the CONSULT-II screen.

a. Increase the engine speed up to 4,000 to 5,000 rpm and keep it for 10 seconds.

b. Fully release accelerator pedal and then let engine idle for about 10 seconds.
   If “TESTING” is not displayed after 10 seconds, refer to EC-153, "TROUBLE DIAGNOSIS - SPECIFICATION VALUE" .

8. Wait for about 20 seconds at idle at under the condition that “TESTING” is displayed on the CONSULT-II screen.

A/F SEN1 (B1) P1278/P1279	
TESTING	
MONITOR	
ENG SPEED	XXX rpm
B/FUEL SCHDL	XXX msec
COOLAN TEMP/S	XXX °C
VHCL SPEED SE	XXX km/h

PBIB1925E

9. Make sure that “TESTING” changes to “COMPLETED”.
   If “TESTING” changed to “OUT OF CONDITION”, refer to EC-153, "TROUBLE DIAGNOSIS - SPECIFICATION VALUE" .
10. Make sure that “OK” is displayed after touching “SELF-DIAG RESULT”.
    If “NG” is displayed, go to EC-554, "Diagnostic Procedure" .

A/F SEN1 (B1) P1278/P1279
COMPLETED

PBIB0758E

WITH GST

1. Start engine and warm it up to normal operating temperature.
2. Select Service $01 with GST.
3. Calculate the total value of “Short term fuel trim” and “Long term fuel trim” indications.
   Make sure that the total percentage should be within ±15%.
   If OK, go to the following step.
   If NG, check the following.

- Intake air leaks
- Exhaust gas leaks
- Incorrect fuel pressure
- Lack of fuel
- Fuel Injector
- Incorrect PCV hose connection
- PCV valve
- Mass air flow sensor

4. Turn ignition switch OFF and wait at least 10 seconds.
5. Start engine and keep the engine speed between 3,500 and 4,000 rpm for at least 1minute under no load.
6. Let engine idle for 1 minute.
7. Increase the engine speed up to 4,000 to 5,000 rpm and keep it for 10 seconds.
8. Fully release accelerator pedal and then let engine idle for about 1 minute.
9. Select Service $07 with GST and make sure that no DTC is displayed.
   If the DTC is displayed, go to EC-554, "Diagnostic Procedure" .

Wiring Diagram
BANK 1

ABS00AB4

EC-AF1B1-01

: DETECTABLE LINE FOR DTC
: NON-DETECTABLE LINE FOR DTC

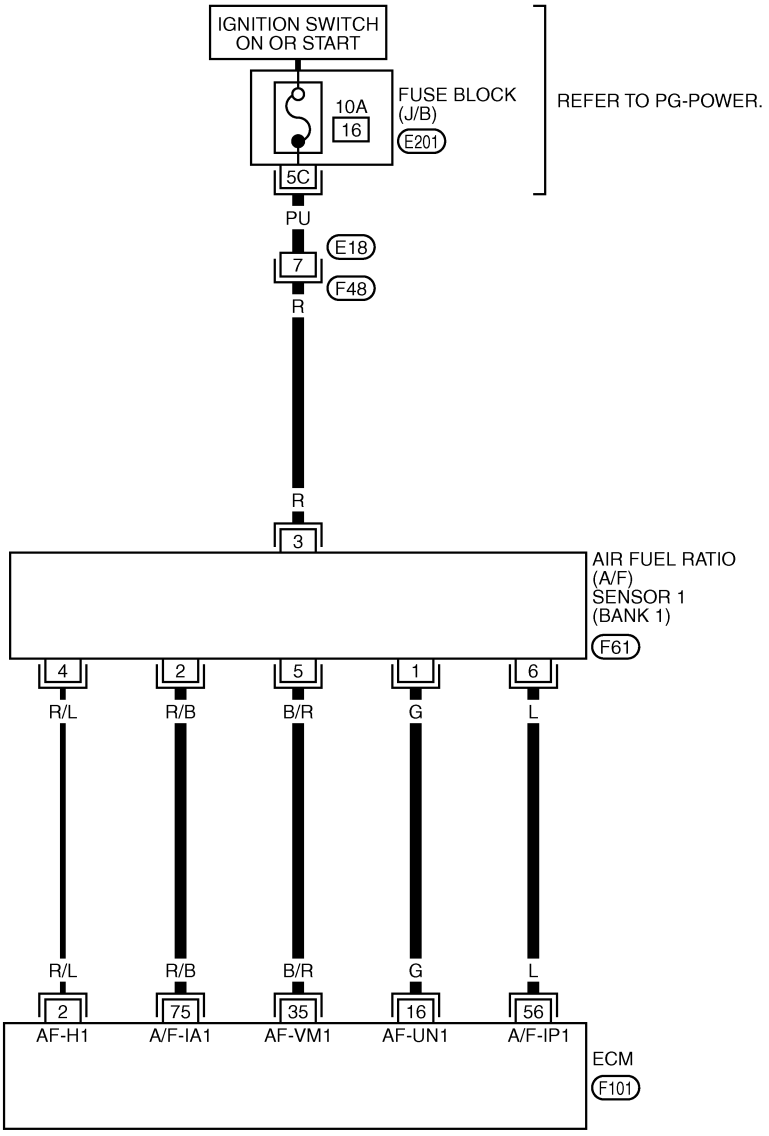

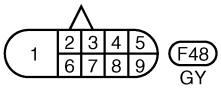

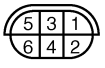

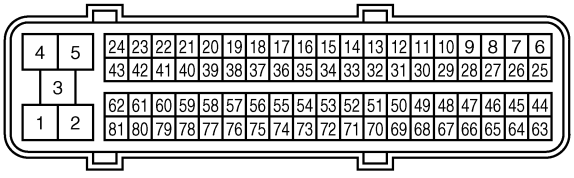

REFER TO THE FOLLOWING.
E201 -FUSE BLOCK-JUNCTION BOX (J/B)

TBWM0390E

Specification data are reference values and are measured between each terminal and ground.

CAUTION:

Do not use ECM ground terminals when measuring input/output voltage. Doing so may result in damage to the ECM's transistor. Use a ground other than ECM terminals, such as the ground.

TERMINAL NO.	WIRE COLOR	ITEM	CONDITION	DATA (DC Voltage)
16	G	A/F sensor 1 (Bank 1)	**[Engine is running]** ● **Warm-up condition** ● Idle speed	Approximately 3.1V
35	B/R			Approximately 2.6V
56	L			Approximately 2.3V
75	R/B			Approximately 2.3V

BANK 2

EC-AF1B2-01

: DETECTABLE LINE FOR DTC
: NON-DETECTABLE LINE FOR DTC

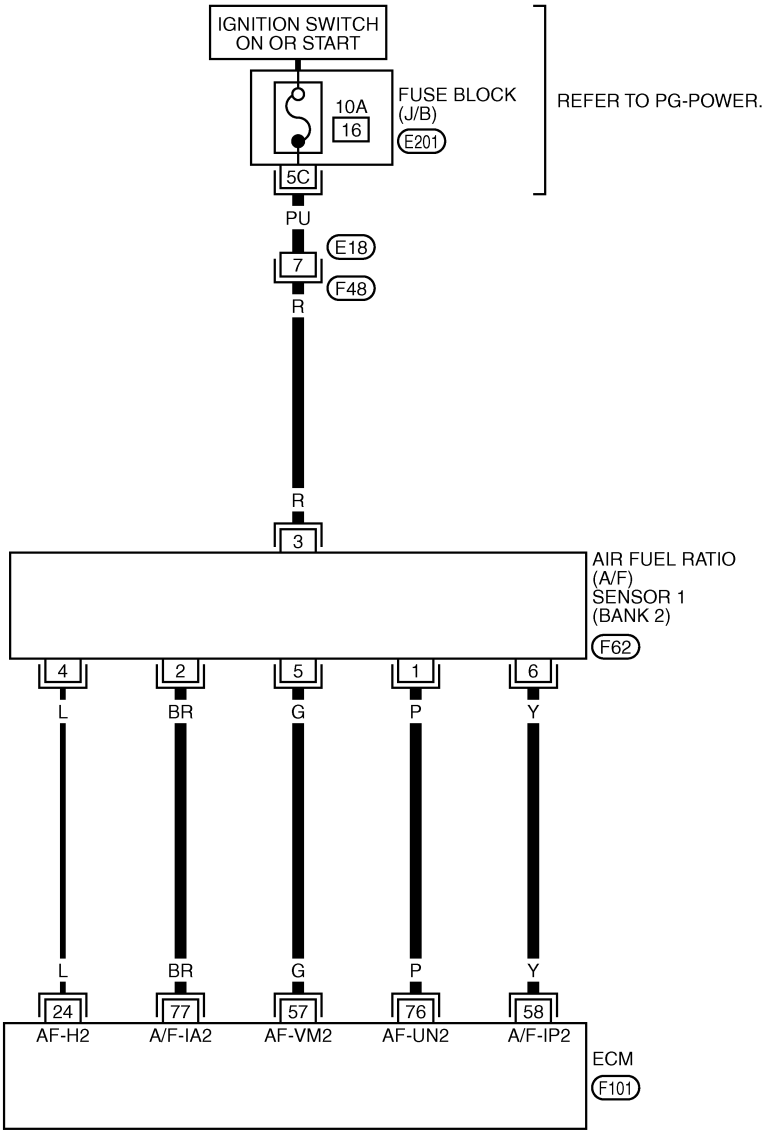

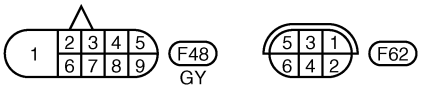

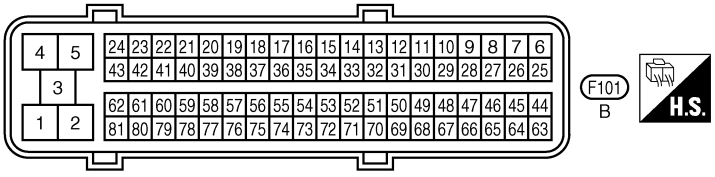

REFER TO THE FOLLOWING.
E201 -FUSE BLOCK-JUNCTION BOX (J/B)

TBWM0391E

Specification data are reference values and are measured between each terminal and ground.

CAUTION:

Do not use ECM ground terminals when measuring input/output voltage. Doing so may result in damage to the ECM's transistor. Use a ground other than ECM terminals, such as the ground.

TERMINAL NO.	WIRE COLOR	ITEM	CONDITION	DATA (DC Voltage)
57	G	A/F sensor 1 (Bank 2)	**[Engine is running]** ● **Warm-up condition** ● Idle speed	Approximately 2.6V
58	Y			Approximately 2.3V
76	P			Approximately 3.1V
77	BR			Approximately 2.3V

Diagnostic Procedure

ABS00AB5

1. CHECK GROUND CONNECTIONS

1. Turn ignition switch OFF.
2. Loosen and retighten ground three screws on the body. Refer to EC-170, "Ground Inspection" .

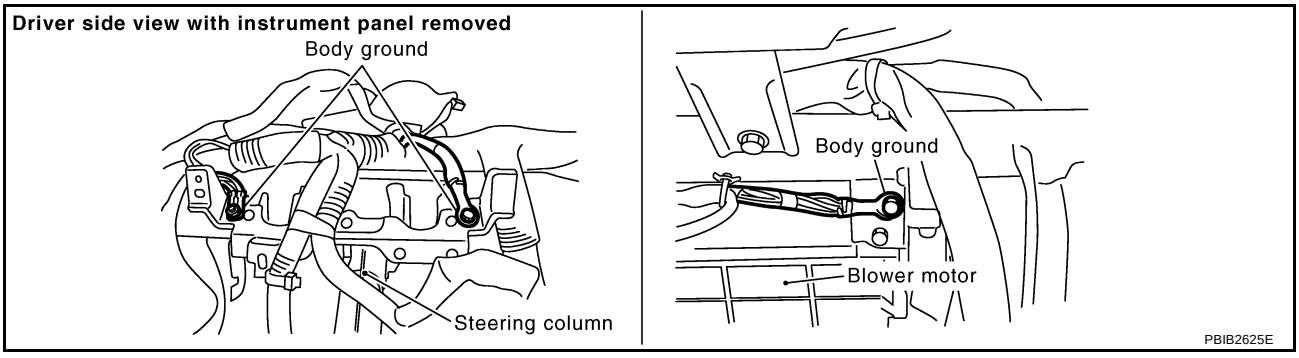

OK or NG

OK >> GO TO 2.
NG >> Repair or replace ground connections.

2. RETIGHTEN AIR FUEL RATIO (A/F) SENSOR 1

Loosen and retighten the air fuel ratio (A/F) sensor 1.

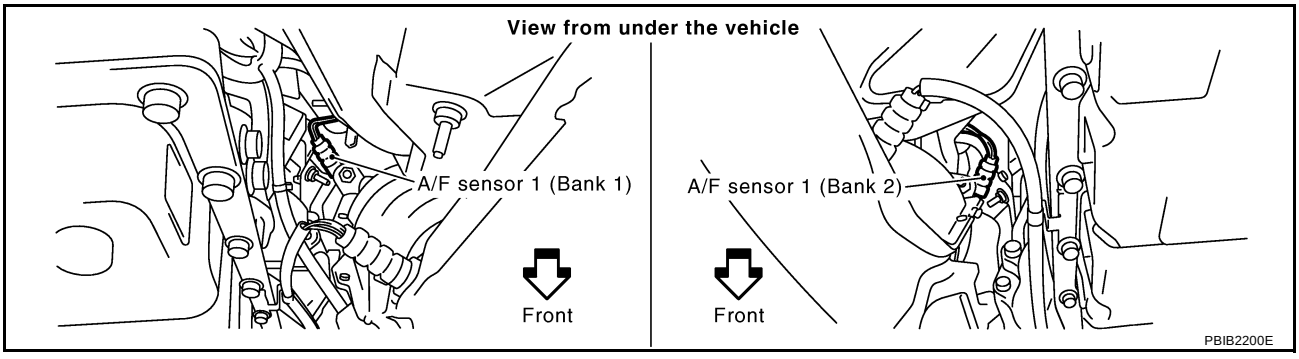

Tightening torque: 40 - 60 N-m (4.1 - 6.1 kg-m, 30 - 44 ft-lb)

>> GO TO 3.

3. CHECK EXHAUST GAS LEAK

1. Start engine and run it at idle.
2. Listen for an exhaust gas leak before three way catalyst 1.

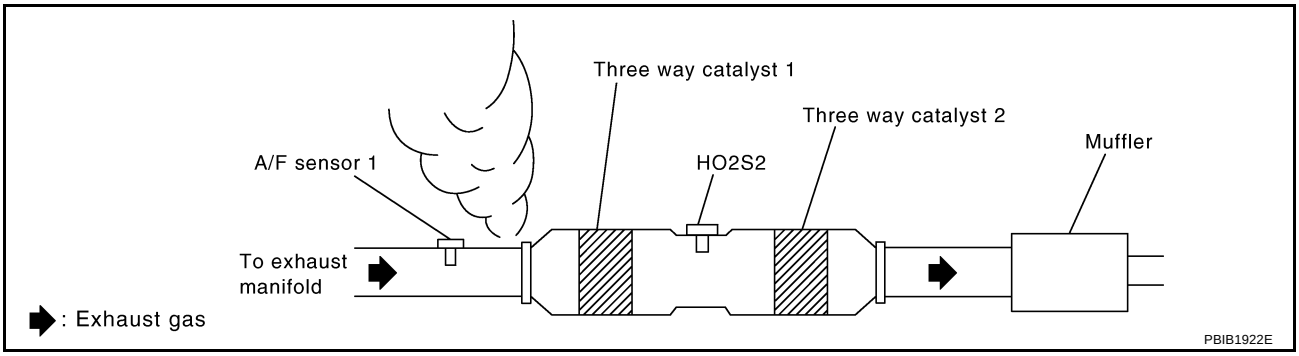

OK or NG

OK >> GO TO 4.
NG >> Repair or replace.

4. CHECK FOR INTAKE AIR LEAK

Listen for an intake air leak after the mass air flow sensor.

OK or NG

OK >> GO TO 5.
NG >> Repair or replace.

5. CLEAR THE SELF-LEARNING DATA

With CONSULT-II

1. Start engine and warm it up to normal operating temperature.
2. Select “SELF-LEARNING CONT” in “WORK SUPPORT” mode with CONSULT-II.
3. Clear the self-learning control coefficient by touching “CLEAR” or “START”.
4. Run engine for at least 10 minutes at idle speed.
   Is the 1st trip DTC P0171, P172, P0174 or P0175 detected?
   Is it difficult to start engine?

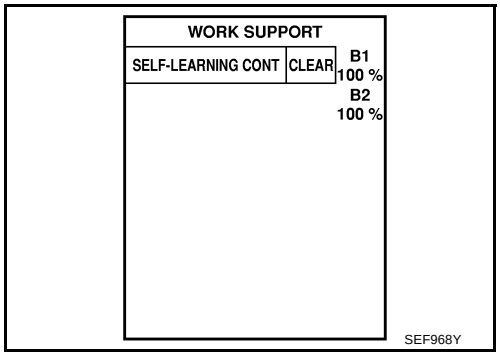

Without CONSULT-II

1. Start engine and warm it up to normal operating temperature.
2. Turn ignition switch OFF.
3. Disconnect mass air flow sensor harness connector.
4. Restart engine and let it idle for at least 3 seconds.
5. Stop engine and reconnect mass air flow sensor harness connector.
6. Make sure DTC P0102 is displayed.
7. Erase the DTC memory. Refer to EC-68, "HOW TO ERASE EMISSION-RELATED DIAGNOSTIC INFORMATION" .
8. Make sure DTC P0000 is displayed.
9. Run engine for at least 10 minutes at idle speed.
   Is the 1st trip DTC P0171, P0172, P0174 or P0175 detected?
   Is it difficult to start engine?

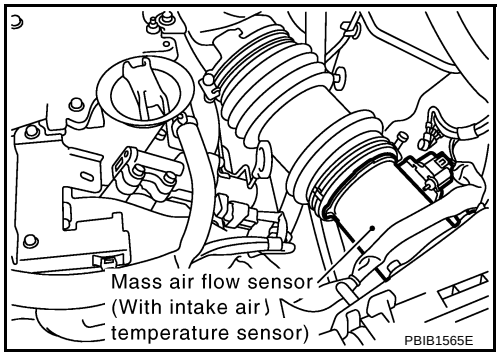

Yes or No

Yes >> Perform trouble diagnosis for DTC P0171, P0174 or P0172, P0175. Refer to EC-248, "DTC P0171, P0174 FUEL INJECTION SYSTEM FUNCTION" or EC-258, "DTC P0172, P0175 FUEL INJECTION SYSTEM FUNCTION" .

No >> GO TO 6.

6. CHECK AIR FUEL RATIO (A/F) SENSOR 1 POWER SUPPLY CIRCUIT

1. Turn ignition switch OFF.
2. Disconnect air fuel ratio (A/F) sensor 1 harness connector.

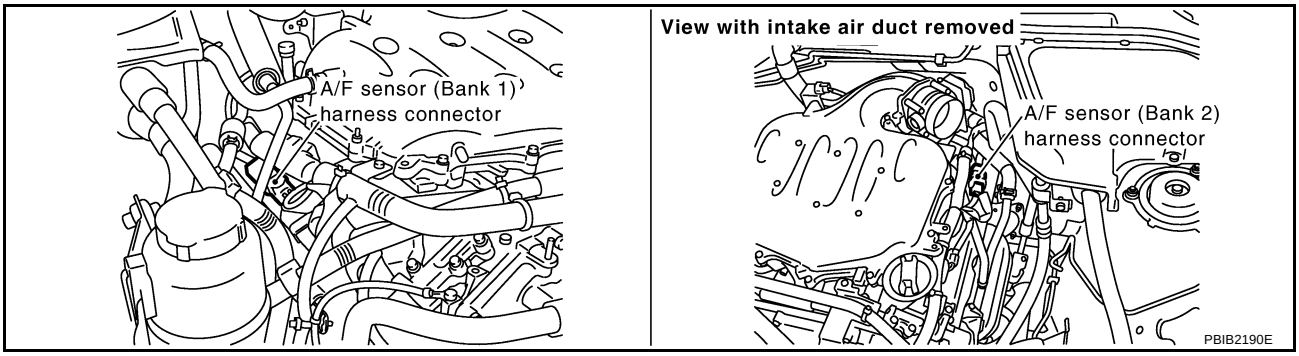

3. Turn ignition switch ON.
4. Check voltage between air fuel ratio (A/F) sensor 1 terminal 3 and ground with CONSULT-II or tester.

Voltage: Battery voltage

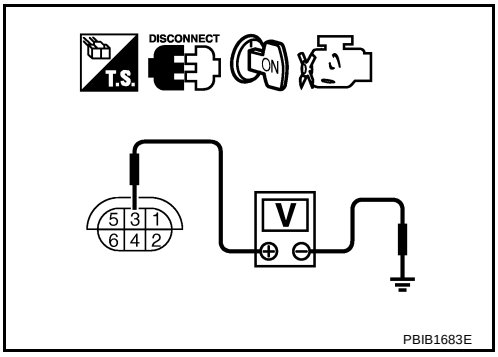

OK or NG

OK >> GO TO 8.
NG >> GO TO 7.

7. DETECT MALFUNCTIONING PART

Check the following.

- Harness connectors E18, F48
- Fuse block (J/B) connector E201
- 10A fuse
- Harness for open or short between air fuel ratio (A/F) sensor 1 and fuse

>> Repair or replace harness or connectors.

8. CHECK AIR FUEL RATIO (A/F) SENSOR 1 INPUT SIGNAL CIRCUIT FOR OPEN AND SHORT

1. Turn ignition switch OFF.
2. Disconnect ECM harness connector.
3. Check harness continuity between the following terminals.
   Refer to Wiring Diagram.

	A/F sensor 1 terminal	ECM terminal
Bank1	1	16
	2	75
	5	35
	6	56
Bank 2	1	76
	2	77
	5	57
	6	58

Continuity should exist.

4. Check harness continuity between the following terminals and ground.
   Refer to Wiring Diagram.

Bank 1		Bank 2	
A/F sensor 1 terminal	ECM terminal	A/F sensor 1 terminal	ECM terminal
1	16	1	76
2	75	2	77
5	35	5	57
6	56	6	58

Continuity should not exist.

5. Also check harness for short to ground and short to power.

OK or NG

OK >> GO TO 9.
NG >> Repair open circuit or short to ground or short to power in harness or connectors.

9. CHECK AIR FUEL RATIO (A/F) SENSOR 1 HEATER

Refer to EC-412, "Component Inspection" .

OK or NG

OK >> GO TO 10.
NG >> Replace air fuel ratio (A/F) sensor 1.

10. CHECK MASS AIR FLOW SENSOR

Refer to EC-193, "Component Inspection" .

OK or NG

OK >> GO TO 11.
NG >> Replace mass air flow sensor.

11. CHECK PCV VALVE

Refer to EC-51, "POSITIVE CRANKCASE VENTILATION" .

OK or NG

OK >> GO TO 12.
NG >> Repair or replace PCV valve.

12. CHECK INTERMITTENT INCIDENT

Perform EC-163, "TROUBLE DIAGNOSIS FOR INTERMITTENT INCIDENT" .

OK or NG

OK >> GO TO 13.
NG >> Repair or replace.

13. REPLACE AIR FUEL RATIO (A/F) SENSOR 1

Replace air fuel ratio (A/F) sensor 1.

CAUTION:

- **Discard any air fuel ratio (A/F) sensor which has been dropped from a height of more than 0.5 m (19.7 in) onto a hard surface such as a concrete floor; use a new one.**
- **Before installing new air fuel ratio (A/F) sensor, clean exhaust system threads using Heated Oxygen Sensor Thread Cleaner tool J-43897-18 or J-43897-12 and approved anti-seize lubricant.**

>> **INSPECTION END**

Removal and Installation

ABS00AB6

AIR FUEL RATIO (A/F) SENSOR 1

Refer to EM-26, "EXHAUST MANIFOLD AND THREE WAY CATALYST"

DTC P1444 EVAP CANISTER PURGE VOLUME CONTROL SOLENOID VALVE

PFP:14920

Description

ABS006VU

SYSTEM DESCRIPTION

Sensor	Input Signal to ECM	ECM function	Actuator
Crankshaft position sensor (POS) Camshaft position sensor (PHASE)	Engine speed*1	EVAP canister purge flow control	EVAP canister purge volume control solenoid valve
Mass air flow sensor	Amount of intake air		
Engine coolant temperature sensor	Engine coolant temperature		
Battery	Battery voltage*1		
Throttle position sensor	Throttle position		
Accelerator pedal position sensor	Accelerator pedal position		
Air fuel ratio (A/F) sensor 1	Density of oxygen in exhaust gas (Mixture ratio feedback signal)		
Fuel tank temperature sensor	Fuel temperature in fuel tank		
Wheel sensor*2	Vehicle speed		

*1: ECM determines the start signal status by the signals of engine speed and battery voltage.
*2: This signal is sent to the ECM through CAN communication line.

This system controls flow rate of fuel vapor from the EVAP canister. The opening of the vapor by-pass passage in the EVAP canister purge volume control solenoid valve changes to control the flow rate. The EVAP canister purge volume control solenoid valve repeats ON/OFF operation according to the signal sent from the ECM. The opening of the valve varies for optimum engine control. The optimum value stored in the ECM is determined by considering various engine conditions. When the engine is operating, the flow rate of fuel vapor from the EVAP canister is regulated as the air flow changes.

COMPONENT DESCRIPTION

The EVAP canister purge volume control solenoid valve uses a ON/OFF duty to control the flow rate of fuel vapor from the EVAP canister. The EVAP canister purge volume control solenoid valve is moved by ON/OFF pulses from the ECM. The longer the ON pulse, the greater the amount of fuel vapor that will flow through the valve.

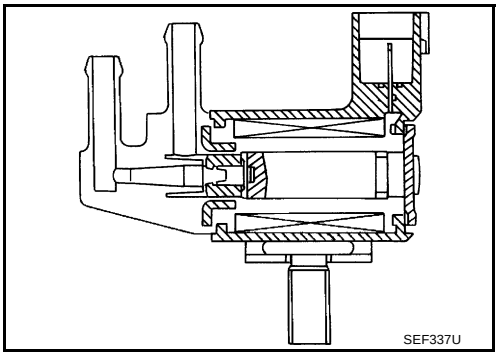

CONSULT-II Reference Value in Data Monitor Mode

ABS006VV

Specification data are reference values.

MONITOR ITEM	CONDITION		SPECIFICATION
PURG VOL C/V	● Engine: After warming up ● Selector lever: P or N ● Air conditioner switch: OFF ● No-load	Idle (Accelerator pedal is not depressed even slightly, after engine starting)	0%
		2,000 rpm	—

On Board Diagnosis Logic

ABS006VW

DTC No.	Trouble diagnosis name	DTC detecting condition	Possible cause
P1444 1444	EVAP canister purge volume control solenoid valve	The canister purge flow is detected during the specified driving conditions, even when EVAP canister purge volume control solenoid valve is completely closed.	● EVAP control system pressure sensor ● EVAP canister purge volume control solenoid valve (The valve is stuck open.) ● EVAP canister vent control valve ● EVAP canister ● Hoses (Hoses are connected incorrectly or clogged.)

DTC Confirmation Procedure

ABS006VX

NOTE:
If DTC Confirmation Procedure has been previously conducted, always turn ignition switch OFF and wait at least 10 seconds before conducting the next test.
TESTING CONDITION:
Always perform test at a temperature of 5°C (41°F) or more.

WITH CONSULT-II

1. Start engine and warm it up to normal operating temperature.
2. Turn ignition switch OFF and wait at least 10 seconds.
3. Turn ignition switch ON.
4. Select “PURG VOL CN/V P1444” of “EVAPORATIVE SYSTEM” in “DTC WORK SUPPORT” mode with CONSULT-II.
5. Touch “START”.

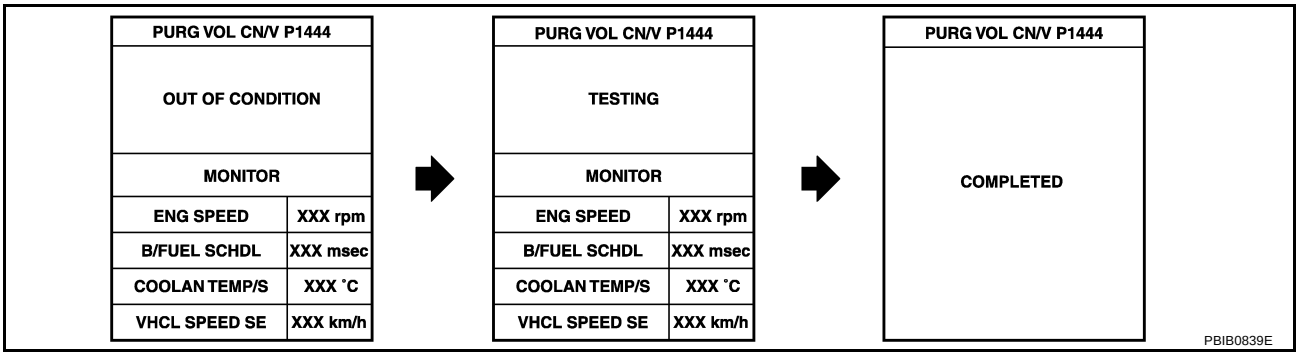

6. Start engine and let it idle until “TESTING” on CONSULT-II changes to “COMPLETED”. (It will take approximately 10 seconds.)
   If “TESTING” is not displayed after 5 minutes, retry from step 2.
7. Make sure that “OK” is displayed after touching “SELF-DIAG RESULTS”. If “NG” is displayed, refer to EC-564, "Diagnostic Procedure" .

WITH GST

1. Start engine and warm it up to normal operating temperature.
2. Turn ignition switch OFF and wait at least 10 seconds.
3. Start engine and let it idle for at least 20 seconds.
4. Select Service $07 with GST.
5. If 1st trip DTC is detected, go to EC-564, "Diagnostic Procedure" .

Wiring Diagram

ABS006VY

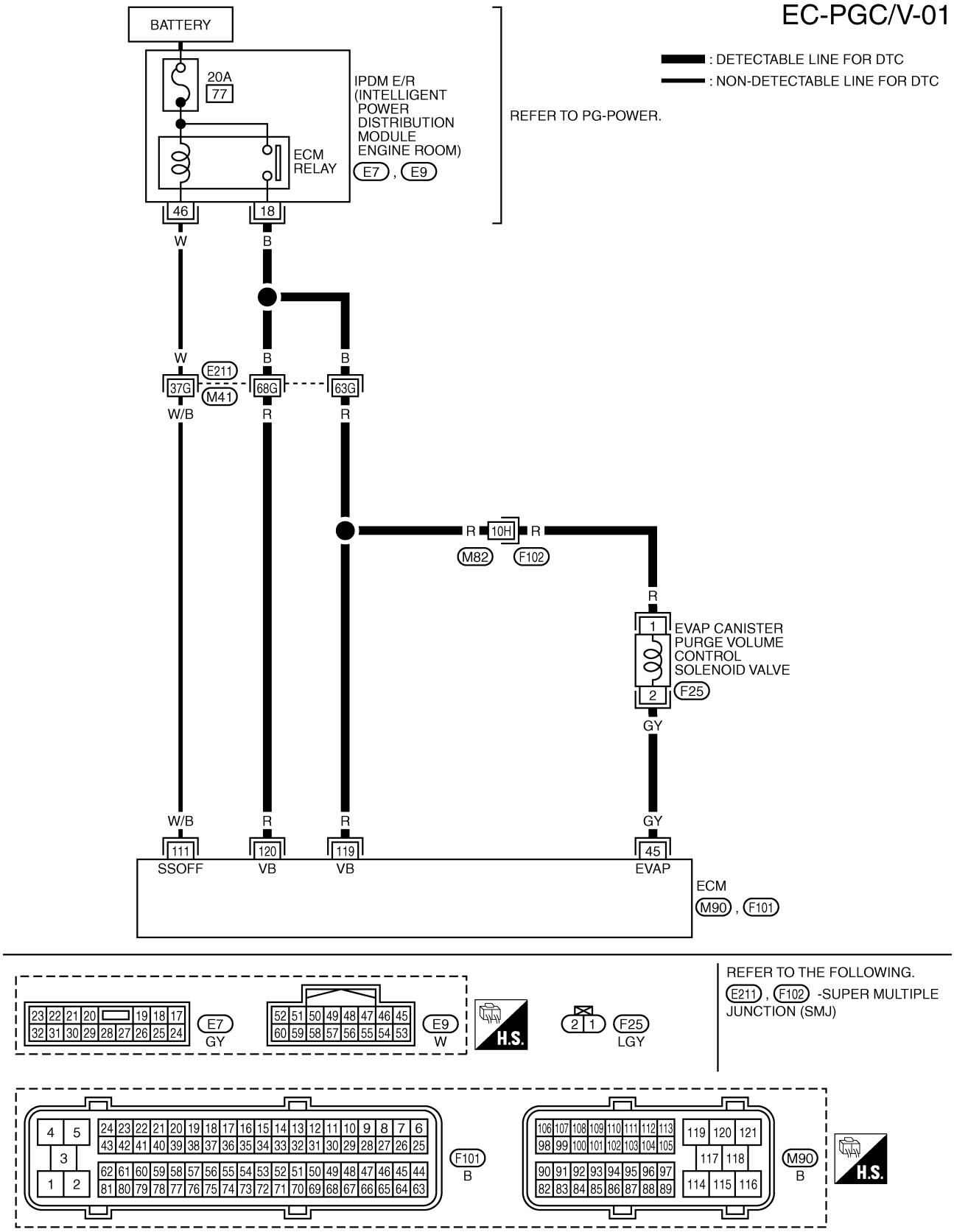

Specification data are reference values and are measured between each terminal and ground.
Pulse signal is measured by CONSULT-II.

CAUTION:
Do not use ECM ground terminals when measuring input/output voltage. Doing so may result in damage to the ECM's transistor. Use a ground other than ECM terminals, such as the ground.

TERMINAL NO.	WIRE COLOR	ITEM	CONDITION	DATA (DC Voltage)
45	GY	EVAP canister purge volume control solenoid valve	**[Engine is running]** ● Idle speed ● Accelerator pedal is not depressed even slightly, after engine starting	BATTERY VOLTAGE (11 - 14V)★ 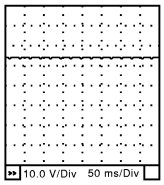 SEC990C
			[Engine is running] ● Engine speed is about 2,000 rpm (More than 100 seconds after starting engine)	BATTERY VOLTAGE (11 - 14V)★ 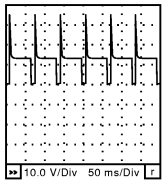 SEC991C
111	W/B	ECM relay (Self shut-off)	**[Engine is running]** **[Ignition switch: OFF]** ● For a few seconds after turning ignition switch OFF	0 - 1.5V
			[Ignition switch: OFF] ● More than a few seconds after turning ignition switch OFF	BATTERY VOLTAGE (11 - 14V)
119 120	R R	Power supply for ECM	**[Ignition switch: ON]**	BATTERY VOLTAGE (11 - 14V)

★: Average voltage for pulse signal (Actual pulse signal can be confirmed by oscilloscope.)

Diagnostic Procedure

ABS006VZ

1. CHECK EVAP CANISTER PURGE VOLUME CONTROL SOLENOID VALVE POWER SUPPLY CIRCUIT

1. Turn ignition switch OFF.
2. Disconnect EVAP canister purge volume control solenoid valve harness connector.
3. Turn ignition switch ON.

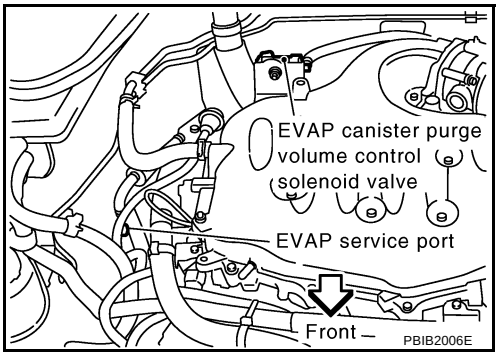

4. Check voltage between EVAP canister purge volume control solenoid valve terminal 1 and ground with CONSULT-II or tester.

Voltage: Battery voltage

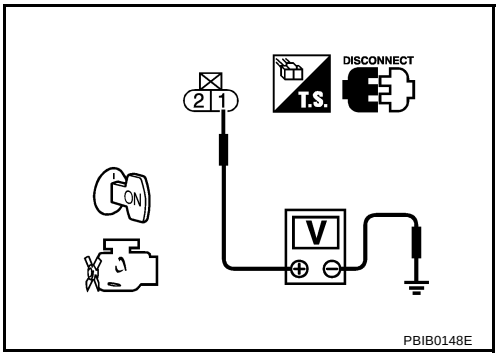

OK or NG

OK >> GO TO 3.
NG >> GO TO 2.

2. DETECT MALFUNCTIONING PART

Check the following.

- Harness connectors E211, M41
- Harness connectors M82, F102
- IPDM E/R harness connector E7
- 20A fuse
- Harness for open or short between EVAP canister purge volume control solenoid valve and IPDM E/R
- Harness for open or short between EVAP canister purge volume control solenoid valve and ECM

>> Repair open circuit or short to ground or short to power in harness or connectors.

3. CHECK EVAP CANISTER PURGE VOLUME CONTROL SOLENOID VALVE OUTPUT SIGNAL CIRCUIT FOR OPEN AND SHORT

1. Turn ignition switch OFF.
2. Disconnect ECM harness connector.
3. Check harness continuity between ECM terminal 45 and EVAP canister purge volume control solenoid valve terminal 2. Refer to Wiring Diagram.

Continuity should exist.

4. Also check harness for short to ground and short to power.

OK or NG

OK >> GO TO 4.
NG >> Repair open circuit or short to ground or short to power in harness or connectors.

4. CHECK EVAP CONTROL SYSTEM PRESSURE SENSOR CONNECTOR

1. Disconnect EVAP control system pressure sensor harness connector.
2. Check connectors for water.

Water should not exist.

OK or NG

OK >> GO TO 5.
NG >> Replace EVAP control system pressure sensor.

5. CHECK EVAP CONTROL SYSTEM PRESSURE SENSOR

Refer to EC-358, "Component Inspection" .

OK or NG

OK (With CONSULT-II)>>GO TO 6.
OK (Without CONSULT-II)>>GO TO 7.
NG >> Replace EVAP control system pressure sensor.

6. CHECK EVAP CANISTER PURGE VOLUME CONTROL SOLENOID VALVE

With CONSULT-II

1. Turn ignition switch OFF.
2. Reconnect harness connectors disconnected.
3. Start engine.
4. Perform “PURG VOL CONT/V” in “ACTIVE TEST” mode with CONSULT-II. Check that engine speed varies according to the valve opening.

ACTIVE TEST	
PURG VOL CONT/V	XXX %
MONITOR	
ENG SPEED	XXX rpm
A/F ALPHA-B1	XX %
A/F ALPHA-B2	XX %

PBIB1678E

OK or NG

OK >> GO TO 8.
NG >> GO TO 7.

7. CHECK EVAP CANISTER PURGE VOLUME CONTROL SOLENOID VALVE

Refer to EC-567, "Component Inspection" .

OK or NG

OK >> GO TO 8.
NG >> Replace EVAP canister purge volume control solenoid valve.

8. CHECK RUBBER TUBE FOR CLOGGING

1. Disconnect rubber tube connected to EVAP canister vent control valve.
2. Check the rubber tube for clogging.

OK or NG

OK >> GO TO 9.
NG >> Clean the rubber tube using an air blower.

9. CHECK EVAP CANISTER VENT CONTROL VALVE

Refer to EC-348, "Component Inspection" .

OK or NG

OK >> GO TO 10.
NG >> Replace EVAP canister vent control valve.

10. CHECK IF EVAP CANISTER SATURATED WITH WATER

1. Remove EVAP canister with EVAP canister vent control valve and EVAP control system pressure sensor attached.
2. Check if water will drain from the EVAP canister.

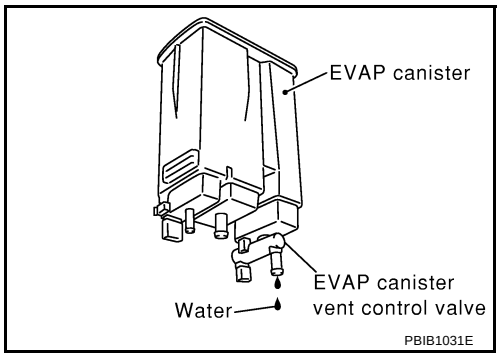

Yes or No

Yes >> GO TO 11.
No >> GO TO 13.

11. CHECK EVAP CANISTER

Weigh the EVAP canister with the EVAP canister vent control valve and EVAP control system pressure sensor attached.
The weight should be less than 2.1 kg (4.6 lb).

OK or NG

OK >> GO TO 13.
NG >> GO TO 12.

12. DETECT MALFUNCTIONING PART

Check the following.

- EVAP canister for damage
- EVAP hose between EVAP canister and vehicle frame for clogging or poor connection

>> Repair hose or replace EVAP canister.

13. CHECK INTERMITTENT INCIDENT

Refer to EC-163, "TROUBLE DIAGNOSIS FOR INTERMITTENT INCIDENT" .

>> **INSPECTION END**

Component Inspection

ABS006W0

EVAP CANISTER PURGE VOLUME CONTROL SOLENOID VALVE

With CONSULT-II

Check air passage continuity of EVAP canister purge volume control solenoid valve under the following conditions.

Condition (PURG VOL CONT/V value)	Air passage continuity between A and B
100%	Yes
0%	No

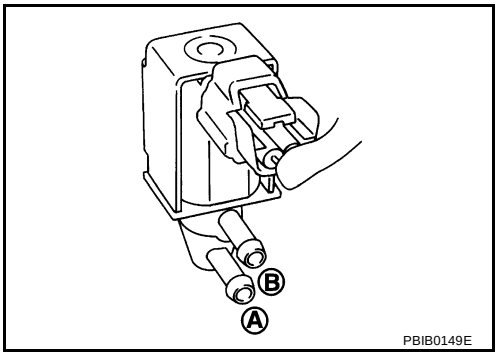

Without CONSULT-II

Check air passage continuity of EVAP canister purge volume control solenoid valve under the following conditions.

Condition	Air passage continuity between A and B
12V direct current supply between terminals 1 and 2	Yes
No supply	No

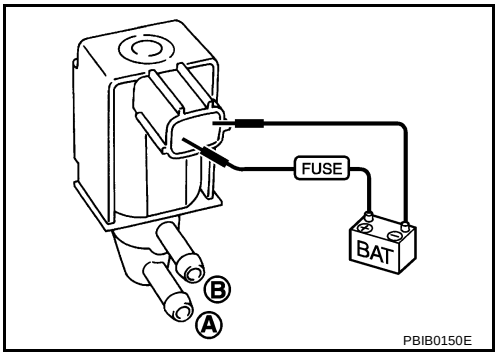

Removal and Installation

ABS006W1

EVAP CANISTER PURGE VOLUME CONTROL SOLENOID VALVE

Refer to EM-19, "INTAKE MANIFOLD COLLECTOR" .

DTC P1446 EVAP CANISTER VENT CONTROL VALVE

PFP:14935

Component Description

ABS006W2

The EVAP canister vent control valve is located on the EVAP canister and is used to seal the canister vent.
This solenoid valve responds to signals from the ECM. When the ECM sends an ON signal, the coil in the solenoid valve is energized. A plunger will then move to seal the canister vent. The ability to seal the vent is necessary for the on board diagnosis of other evaporative emission control system components.
This solenoid valve is used only for diagnosis, and usually remains opened.
When the vent is closed, under normal purge conditions, the evaporative emission control system is depressurized and allows EVAP Control System diagnosis.

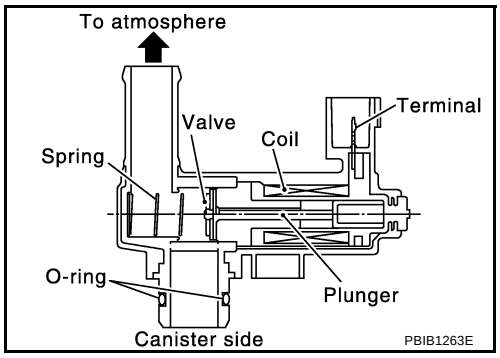

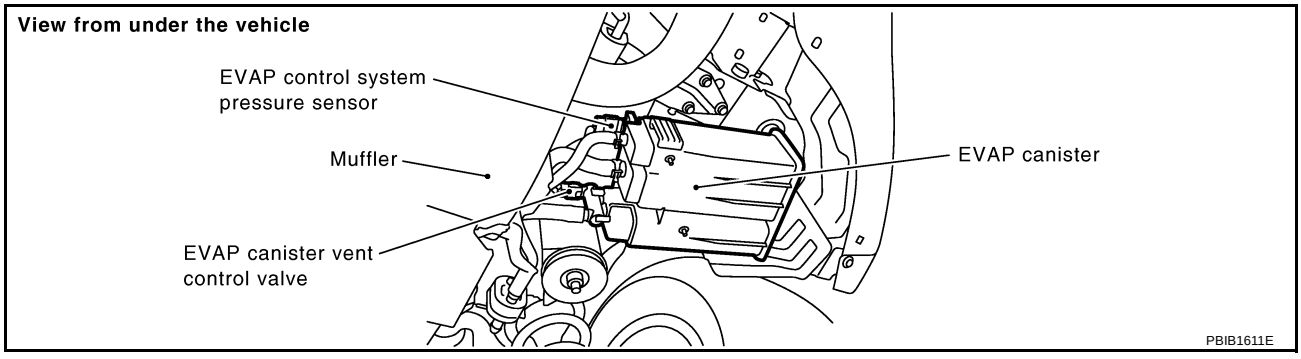

CONSULT-II Reference Value in Data Monitor Mode

ABS006W3

Specification data are reference values.

MONITOR ITEM	CONDITION	SPECIFICATION
VENT CONT/V	● Ignition switch: ON	OFF

On Board Diagnosis Logic

ABS006W4

DTC No.	Trouble diagnosis name	DTC detecting condition	Possible cause
P1446 1446	EVAP canister vent control valve close	EVAP canister vent control valve remains closed under specified driving conditions.	● EVAP canister vent control valve ● EVAP control system pressure sensor and the circuit ● Blocked rubber tube to EVAP canister vent control valve ● EVAP canister is saturated with water

DTC Confirmation Procedure

ABS006W5

NOTE:
If DTC Confirmation Procedure has been previously conducted, always turn ignition switch OFF and wait at least 10 seconds before conducting the next test.

WITH CONSULT-II

1. Turn ignition switch ON and wait at least 5 seconds.
2. Turn ignition switch OFF and wait at least 10 seconds.
3. Turn ignition switch ON and select “DATA MONITOR” mode with CONSULT-II.
4. Start engine and let it idle for at least 1 minute.
5. Repeat next procedures 3 times.

a. Increase the engine speed up to 3,000 to 3,500 rpm and keep it for 2 minutes and 50 seconds to 3 minutes.
Never exceed 3 minutes.

b. Fully released accelerator pedal and keep engine idle for about 5 seconds.

6. If 1st trip DTC is detected, go to EC-571, "Diagnostic Procedure".
If 1st trip DTC is not detected, go to the next step.

DATA MONITOR	
MONITOR	NO DTC
ENG SPEED	XXX rpm

SEF058Y

7. Repeat next procedure 20 times.

a. Quickly increase the engine speed up to 4,000 to 4,500 rpm or more and keep it for 25 to 30 seconds.

b. Fully released accelerator pedal and keep engine idle for at least 35 seconds.

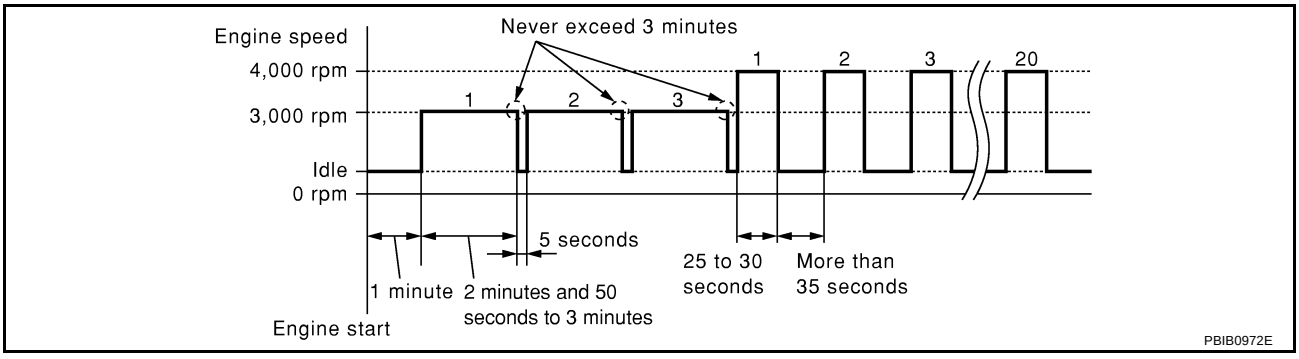

8. If 1st trip DTC is detected, go to EC-571, "Diagnostic Procedure" .

WITH GST

Follow the procedure “WITH CONSULT-II” above.

Wiring Diagram

ABS006W6

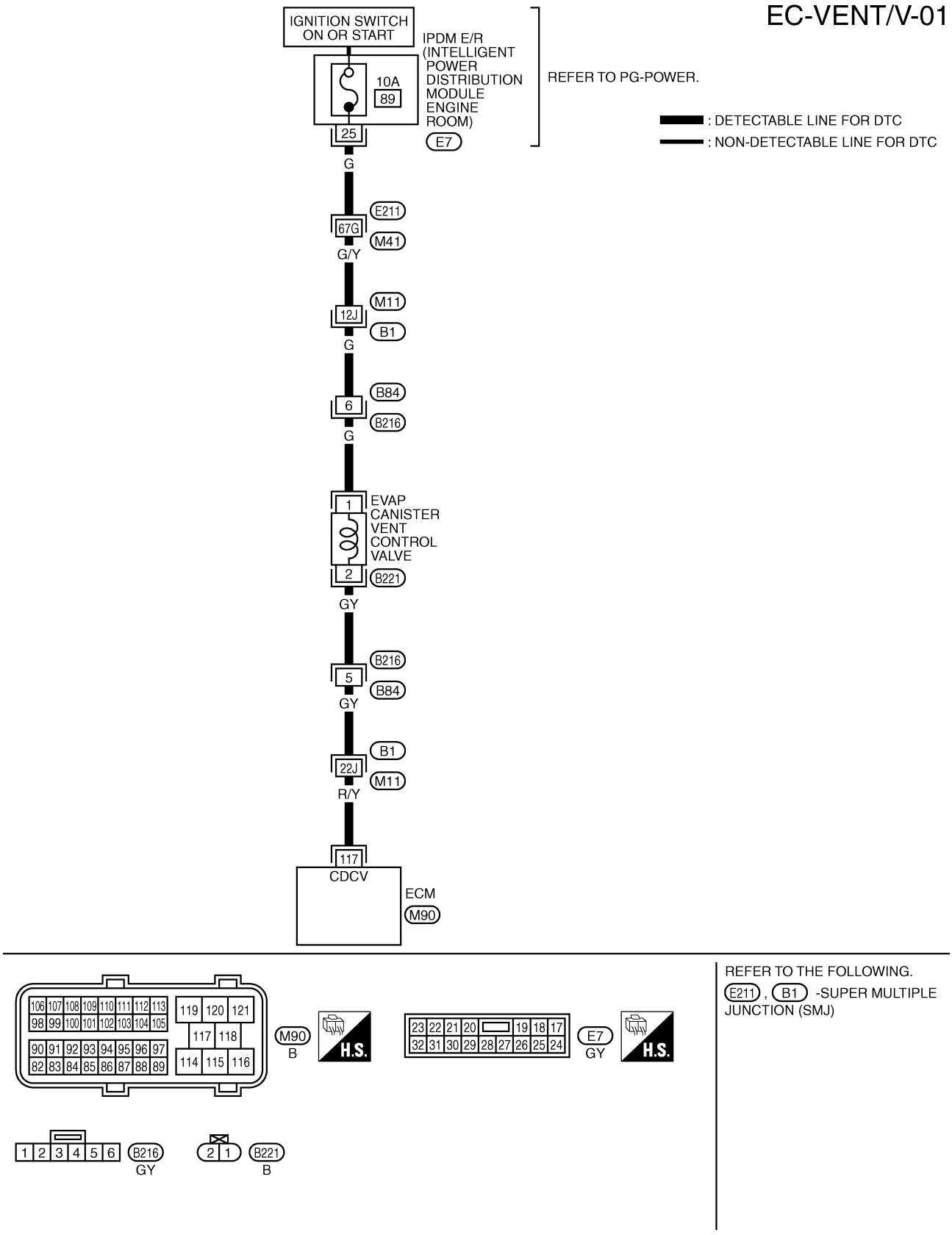

Specification data are reference values and are measured between each terminal and ground.

CAUTION:
Do not use ECM ground terminals when measuring input/output voltage. Doing so may result in damage to the ECM's transistor. Use a ground other than ECM terminals, such as the ground.

TERMINAL NO.	WIRE COLOR	ITEM	CONDITION	DATA (DC Voltage)
117	R/Y	EVAP canister vent control valve	**[Ignition switch: ON]**	BATTERY VOLTAGE (11 - 14V)

Diagnostic Procedure

ABS006W7

1. CHECK RUBBER TUBE

1. Turn ignition switch OFF.
2. Disconnect rubber tube connected to EVAP canister vent control valve.

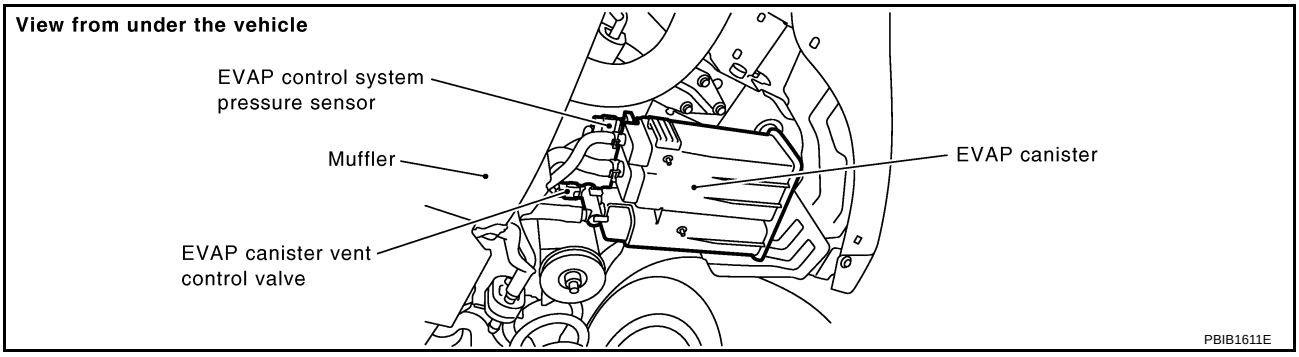

3. Check the rubber tube for clogging.

OK or NG

OK >> GO TO 2.
NG >> Clean rubber tube using an air blower.

2. CHECK EVAP CANISTER VENT CONTROL VALVE

Refer to EC-348, "Component Inspection" .

OK or NG

OK >> GO TO 3.
NG >> Replace EVAP canister vent control valve.

3. CHECK IF EVAP CANISTER SATURATED WITH WATER

1. Remove EVAP canister with EVAP canister vent control valve and EVAP control system pressure sensor attached.
2. Check if water will drain from the EVAP canister.

Yes or No

Yes >> GO TO 4.
No >> GO TO 6.

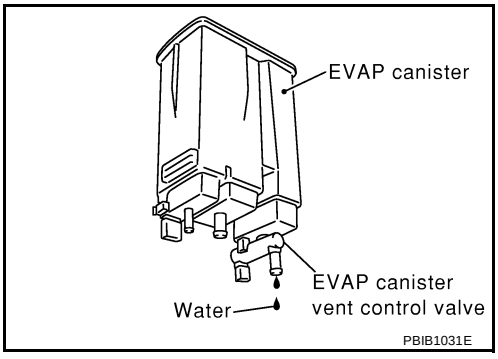

4. CHECK EVAP CANISTER

Weigh the EVAP canister with the EVAP canister vent control valve and EVAP control system pressure sensor attached.

The weight should be less than 2.1 kg (4.6 lb).

OK or NG

OK >> GO TO 6.
NG >> GO TO 5.

5. DETECT MALFUNCTIONING PART

Check the following.

- EVAP canister for damage
- EVAP hose between EVAP canister and vehicle frame for clogging or poor connection

>> Repair hose or replace EVAP canister.

6. CHECK EVAP CONTROL SYSTEM PRESSURE SENSOR CONNECTOR

1. Disconnect EVAP control system pressure sensor harness connector.
2. Check connectors for water.

Water should not exist.

OK or NG

OK >> GO TO 7.
NG >> Replace EVAP control system pressure sensor.

7. CHECK EVAP CONTROL SYSTEM PRESSURE SENSOR

Refer to EC-358, "Component Inspection" .

OK or NG

OK >> GO TO 8.
NG >> Replace EVAP control system pressure sensor.

8. CHECK INTERMITTENT INCIDENT

Refer to EC-163, "TROUBLE DIAGNOSIS FOR INTERMITTENT INCIDENT" .

>> **INSPECTION END**

Component Inspection

ABS006W8

EVAP CANISTER VENT CONTROL VALVE

With CONSULT-II

1. Remove EVAP canister vent control valve from EVAP canister.
2. Check portion **B** of EVAP canister vent control valve for being rusted.
   If NG, replace EVAP canister vent control valve.
   If OK, go to next step.
3. Reconnect harness connectors disconnected.
4. Turn ignition switch ON.

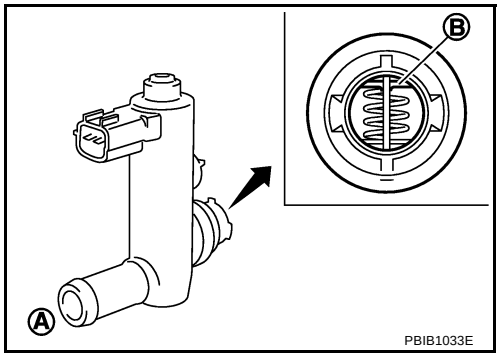

5. Perform “VENT CONTROL/V” in “ACTIVE TEST” mode.
6. Check air passage continuity and operation delay time.
   Make sure new O-ring is installed properly.

Condition VENT CONTROL/V	Air passage continuity between A and B
ON	No
OFF	Yes

Operation takes less than 1 second.

If NG, replace EVAP canister vent control valve.
If OK, go to next step.

ACTIVE TEST	
VENT CONTROL/V	OFF
MONITOR	
ENG SPEED	XXX rpm
A/F ALPHA-B1	XXX %
A/F ALPHA-B2	XXX %

PBIB1679E

7. Clean the air passage (Portion **A** to **B**) of EVAP canister vent control valve using an air blower.
8. Perform step 6 again.

Without CONSULT-II

1. Remove EVAP canister vent control valve from EVAP canister.
2. Check portion **B** of EVAP canister vent control valve for being rusted.

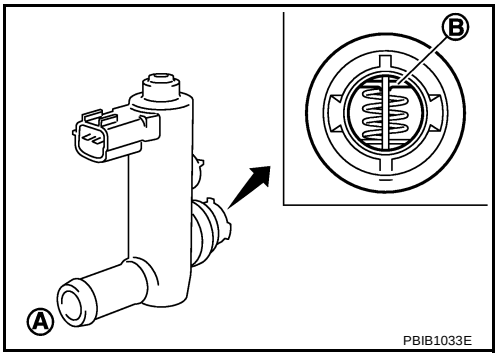

PBIB1033E

3. Check air passage continuity and operation delay time under the following conditions.
   Make sure new O-ring is installed properly.

Condition	Air passage continuity between A and B
12V direct current supply between terminals 1 and 2	No
OFF	Yes

Operation takes less than 1 second.

If NG, replace EVAP canister vent control valve.
If OK, go to next step.

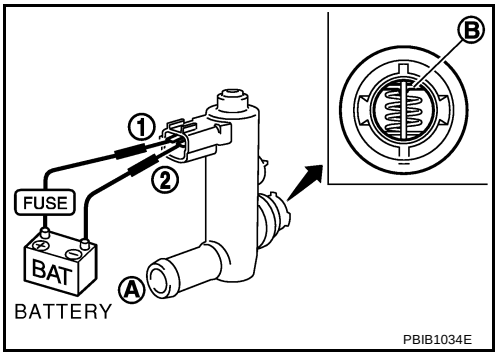

PBIB1034E

4. Clean the air passage (Portion **A** to **B**) of EVAP canister vent control valve using an air blower.
5. Perform step 3 again.

DTC P1564 ICC STEERING SWITCH

PFP:25551

Component Description

ABS007YZ

ICC steering switch has variant values of electrical resistance for each button. ECM reads voltage variation of switch, and determines which button is operated.

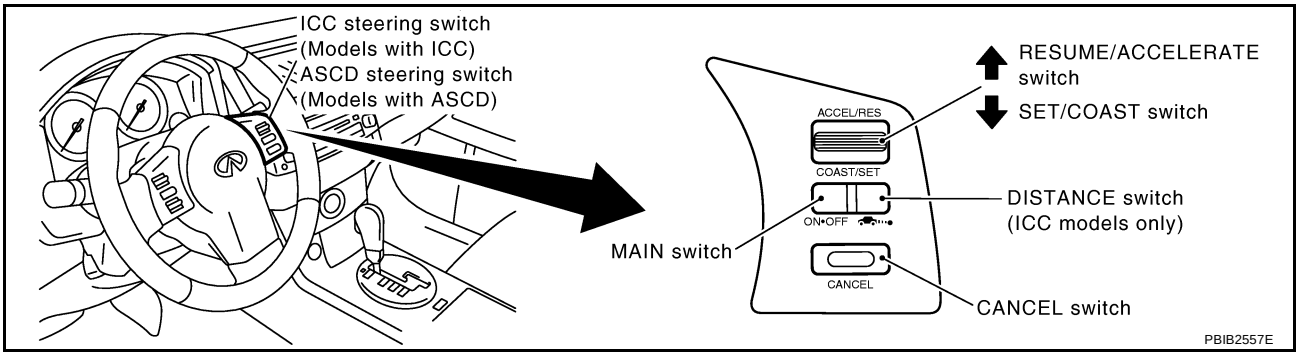

Refer to ACS-6, "DESCRIPTION" for the ICC function.

CONSULT-II Reference Value in Data Monitor Mode

ABS007Z0

Specification data are reference values.

MONITOR ITEM	CONDITION		SPECIFICATION
MAIN SW	● Ignition switch: ON	MAIN switch: Pressed	ON
		MAIN switch: Released	OFF
CANCEL SW	● Ignition switch: ON	CANCEL switch: Pressed	ON
		CANCEL switch: Released	OFF
RESUME/ACC SW	● Ignition switch: ON	RESUME/ACCELERATE switch: Pressed	ON
		RESUME/ACCELERATE switch: Released	OFF
SET SW	● Ignition switch: ON	SET/COAST switch: Pressed	ON
		SET/COAST switch: Released	OFF
DIST SW	● Ignition switch: ON	DISTANCE switch: Depressed	ON
		DISTANCE switch: Released	OFF

On Board Diagnosis Logic

ABS007Z1

- **This self-diagnosis has the one trip detection logic.**
- **The MIL will not light up for this self-diagnosis**.

NOTE:
If DTC P1564 is displayed with DTC P0605, first perform the trouble diagnosis for DTC P0605. Refer to EC-402 .

DTC No.	Trouble Diagnosis Name	DTC Detecting Condition	Possible Cause
P1564 1564	ICC steering switch	● An excessively high voltage signal from the ICC steering switch is sent to ECM. ● ECM detects that input signal from the ICC steering switch is out of the specified range. ● ECM detects that the ICC steering switch is stuck ON.	● Harness or connectors (The switch circuit is open or shorted.) ● ICC steering switch ● ECM

DTC Confirmation Procedure

ABS007Z2

NOTE:
If DTC Confirmation Procedure has been previously conducted, always turn ignition switch OFF and wait at least 10 seconds before conducting the next test.

WITH CONSULT-II

1. Turn ignition switch ON.
2. Select “DATA MONITOR” mode with CONSULT-II.
3. Wait at least 10 seconds.
4. Press MAIN switch for at least 10 seconds, then release it and wait at least 10 seconds.
5. Press RESUME/ACCELERATE switch for at least 10 seconds, then release it and wait at least 10 seconds.
6. Press SET/COAST switch for at least 10 seconds, then release it and wait at least 10 seconds.
7. Press DISTANCE switch for at least 10 seconds, then release it and wait at least 10 seconds.
8. Press CANCEL switch for at least 10 seconds, then release it and wait at least 10 seconds.
9. If DTC is detected, go to EC-577, "Diagnostic Procedure" .

WITH GST

Follow the procedure “WITH CONSULT-II” above.

Wiring Diagram

ABS007Z3

EC-ICC/SW-01

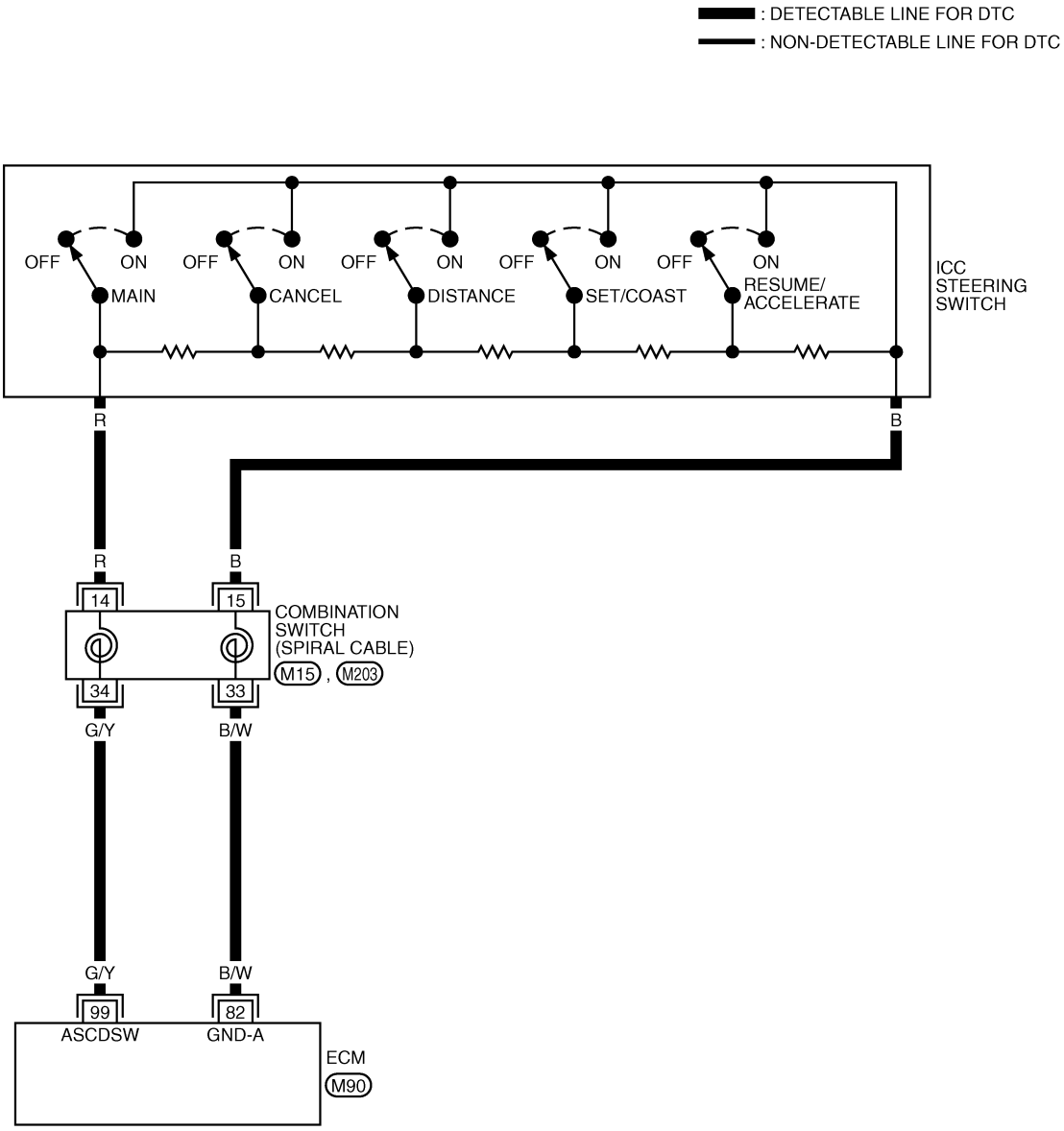

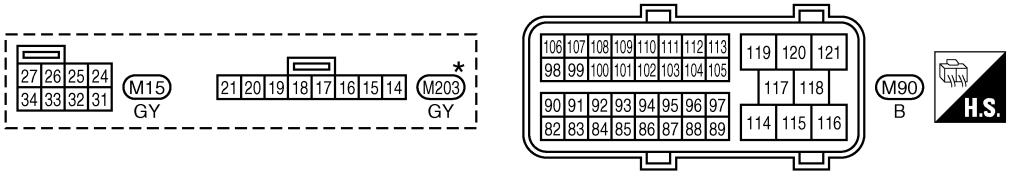

*: THIS CONNECTOR IS NOT SHOWN IN "HARNESS LAYOUT", PG SECTION.

TBWM0732E

Specification data are reference values and are measured between each terminal and ground.

CAUTION:
Do not use ECM ground terminals when measuring input/output voltage. Doing so may result in damage to the ECM's transistor. Use a ground other than ECM terminals, such as the ground.

TERMINAL NO.	WIRE COLOR	ITEM	CONDITION	DATA (DC Voltage)
82	B/W	Sensor ground (ICC steering switch)	**[Engine is running]** ● **Warm-up condition** ● Idle speed	Approximately 0V
99	G/Y	ICC steering switch (models with ICC system)	**[Ignition switch: ON]** ● ICC steering switch: OFF	Approximately 4.3V
			[Ignition switch: ON] ● MAIN switch: Pressed	Approximately 0V
			[Ignition switch: ON] ● CANCEL switch: Pressed	Approximately 1.3V
			[Ignition switch: ON] ● RESUME/ACCELERATE switch: Pressed	Approximately 3.7V
			[Ignition switch: ON] ● SET/COAST switch: Pressed	Approximately 3.0V
			[Ignition switch: ON] ● DISTANCE switch: Pressed	Approximately 2.2V

Diagnostic Procedure

ABS007Z4

1. CHECK GROUND CONNECTIONS

1. Turn ignition switch OFF.
2. Loosen and retighten ground three screws on the body. Refer to EC-170, "Ground Inspection" .

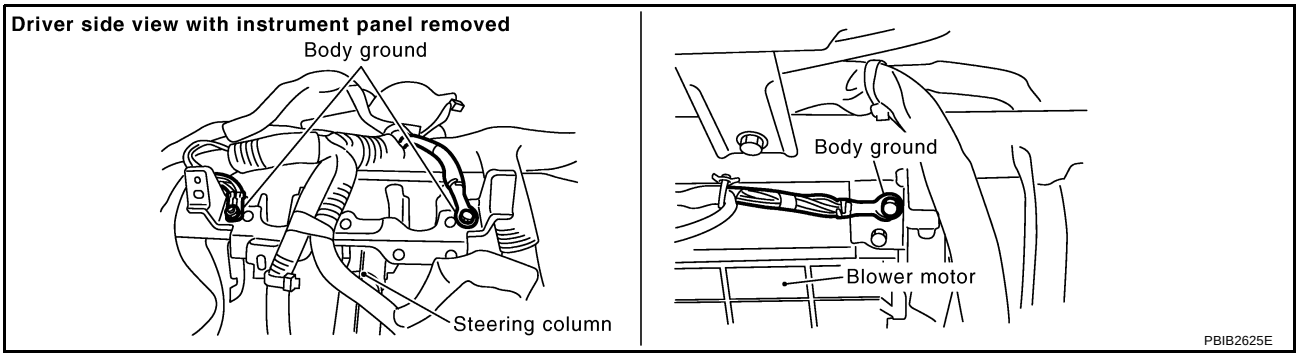

OK or NG

OK >> GO TO 2.
NG >> Repair or replace ground connections.

2. CHECK ICC STEERING SWITCH CIRCUIT

With CONSULT-II

1. Turn ignition switch ON.
2. Select “MAIN SW”, “RESUME/ACC SW”, “SET SW”, “DIST SW” and “CANCEL SW” in “DATA MONITOR” mode with CONSULT-II.
3. Check each item indication under the following conditions.

Switch	Monitor item	Condition	Indication
MAIN switch	MAIN SW	Pressed	ON
		Released	OFF
CANCEL switch	CANCEL SW	Pressed	ON
		Released	OFF
RESUME/ACCELERATE switch	RESUME/ACC SW	Pressed	ON
		Released	OFF
SET/COAST switch	SET SW	Pressed	ON
		Released	OFF
DISTANCE switch	DIST SW	Pressed	ON
		Released	OFF

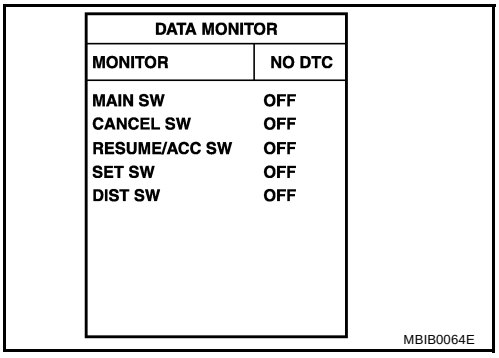

Without CONSULT-II

1. Turn ignition switch ON.
2. Check voltage between ECM terminal 99 and ground with pressing each button.

Switch	Condition	Voltage [V]
MAIN switch	Pressed	Approx. 0
	Released	Approx. 4.3
CANCEL switch	Pressed	Approx. 1.3
	Released	Approx. 4.3
RESUME/ACCELERATE switch	Pressed	Approx. 3.7
	Released	Approx. 4.3
SET/COAST switch	Pressed	Approx. 3.0
	Released	Approx. 4.3
DISTANCE switch	Pressed	Approx. 2.2
	Released	Approx. 4.3

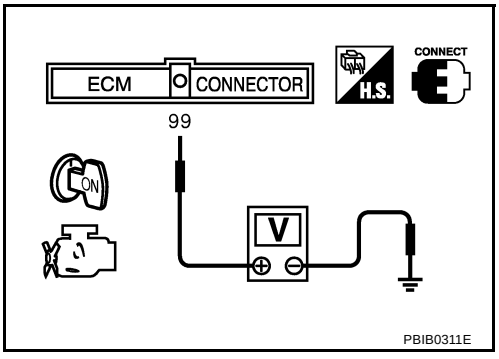

OK or NG

OK >> GO TO 8.
NG >> GO TO 3.

3. CHECK ICC STEERING SWITCH GROUND CIRCUIT FOR OPEN AND SHORT

1. Turn ignition switch OFF.
2. Disconnect combination switch harness connector.
3. Disconnect ECM harness connector.
4. Check harness continuity between combination switch terminal 15 and ECM terminal 82.
   Refer to Wiring Diagram.

   Continuity should exist.

5. Also check harness for short to ground and short to power.

OK or NG

OK >> GO TO 5.
NG >> GO TO 4.

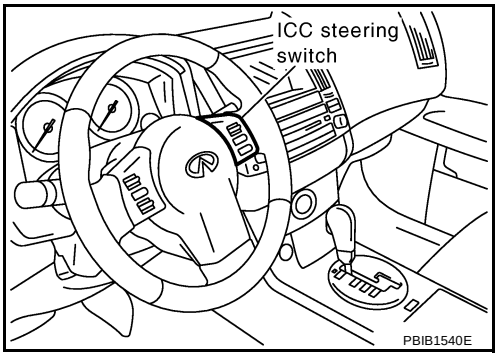

4. DETECT MALFUNCTIONING PART

Check the following.

- Combination switch (spiral cable)
- Harness for open and short between ECM and combination switch

>> Repair open circuit or short to ground or short to power in harness or connectors.

5. CHECK ICC STEERING SWITCH INPUT SIGNAL CIRCUIT FOR OPEN AND SHORT

1. Check harness continuity between ECM terminal 99 and combination switch terminal 14.
   Refer to Wiring Diagram.

   Continuity should exist.

2. Also check harness for short to ground and short to power.

OK or NG

OK >> GO TO 7.
NG >> GO TO 6.

6. DETECT MALFUNCTIONING PART

Check the following.

- Combination switch (spiral cable)
- Harness for open and short between ECM and combination switch

>> Repair open circuit or short to ground or short to power in harness or connectors.

7. CHECK ICC STEERING SWITCH

Refer to EC-580, "Component Inspection" .

OK or NG

OK >> GO TO 8.
NG >> Replace ICC steering switch.

8. CHECK INTERMITTENT INCIDENT

Refer to EC-163, "TROUBLE DIAGNOSIS FOR INTERMITTENT INCIDENT" .

>> **INSPECTION END**

Component Inspection

ABS007Z5

ICC STEERING SWITCH

1. Disconnect combination switch (spiral cable) harness connector.
2. Check continuity between combination switch (spiral cable) terminals 14 and 15 with pushing each switch.

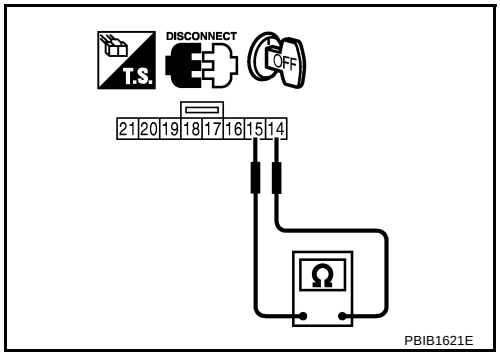

Switch	Condition	Resistance [Ω]
MAIN switch	Pressed	Approx. 0
	Released	Approx. 5,500
CANCEL switch	Pressed	Approx. 310
	Released	Approx. 5,500
RESUME/ACCELERATE switch	Pressed	Approx. 2,600
	Released	Approx. 5,500
SET/COAST switch	Pressed	Approx. 1,400
	Released	Approx. 5,500
DISTANCE switch	Pressed	Approx. 740
	Released	Approx. 5,500

If NG, replace ICC steering switch.

DTC P1564 ASCD STEERING SWITCH

PFP:25551

Component Description

ABS006W9

ASCD steering switch has variant values of electrical resistance for each button. ECM reads voltage variation of switch, and determines which button is operated.

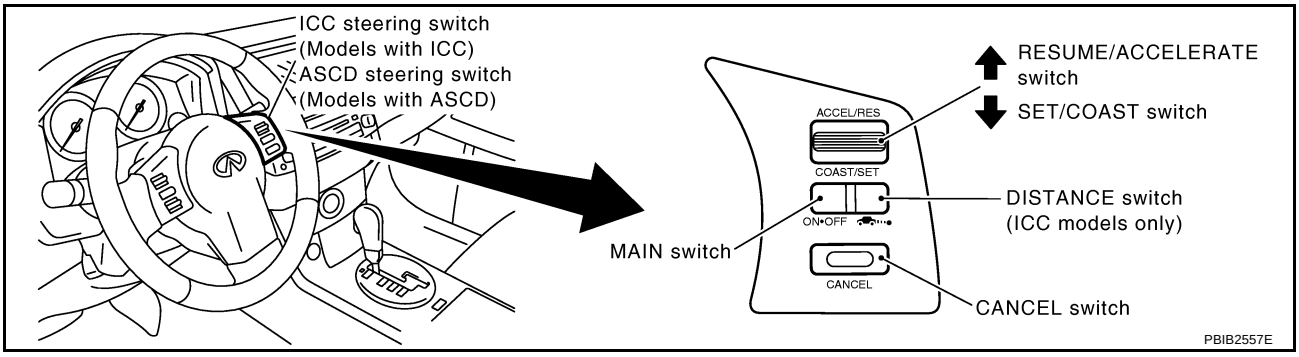

Refer to EC-36, "AUTOMATIC SPEED CONTROL DEVICE (ASCD)" for the ASCD function.

CONSULT-II Reference Value in Data Monitor Mode

ABS006WA

Specification data are reference values.

MONITOR ITEM	CONDITION		SPECIFICATION
MAIN SW	● Ignition switch: ON	MAIN switch: Pressed	ON
		MAIN switch: Released	OFF
CANCEL SW	● Ignition switch: ON	CANCEL switch: Pressed	ON
		CANCEL switch: Released	OFF
RESUME/ACC SW	● Ignition switch: ON	RESUME/ACCELERATE switch: Pressed	ON
		RESUME/ACCELERATE switch: Released	OFF
SET SW	● Ignition switch: ON	SET/COAST switch: Pressed	ON
		SET/COAST switch: Released	OFF

On Board Diagnosis Logic

ABS006WB

This self-diagnosis has the one trip detection logic.
The MIL will not light up for this diagnosis.

NOTE:
If DTC P1564 is displayed with DTC P0605, first perform the trouble diagnosis for DTC P0605. Refer to EC-402.

DTC No.	Trouble Diagnosis Name	DTC Detecting Condition	Possible Cause
P1564 1564	ASCD steering switch	● An excessively high voltage signal from the ASCD steering switch is sent to ECM. ● ECM detects that input signal from the ASCD steering switch is out of the specified range. ● ECM detects that the ASCD steering switch is stuck ON.	● Harness or connectors (The switch circuit is open or shorted.) ● ASCD steering switch ● ECM

DTC Confirmation Procedure

ABS006WC

NOTE:
If DTC Confirmation Procedure has been previously conducted, always turn ignition switch OFF and wait at least 10 seconds before conducting the next test.

WITH CONSULT-II

1. Turn ignition switch ON.
2. Select “DATA MONITOR” mode with CONSULT-II.
3. Wait at least 10 seconds.
4. Press MAIN switch for at least 10 seconds, then release it and wait at least 10 seconds.
5. Press RESUME/ACCELERATE switch for at least 10 seconds, then release it and wait at least 10 seconds.
6. Press SET/COAST switch for at least 10 seconds, then release it and wait at least 10 seconds.
7. Press CANCEL switch for at least 10 seconds, then release it and wait at least 10 seconds.
8. If DTC is detected, go to EC-584, "Diagnostic Procedure" .

WITH GST

Follow the procedure “WITH CONSULT-II” above.

Wiring Diagram

ABS006WD

EC-ASC/SW-01

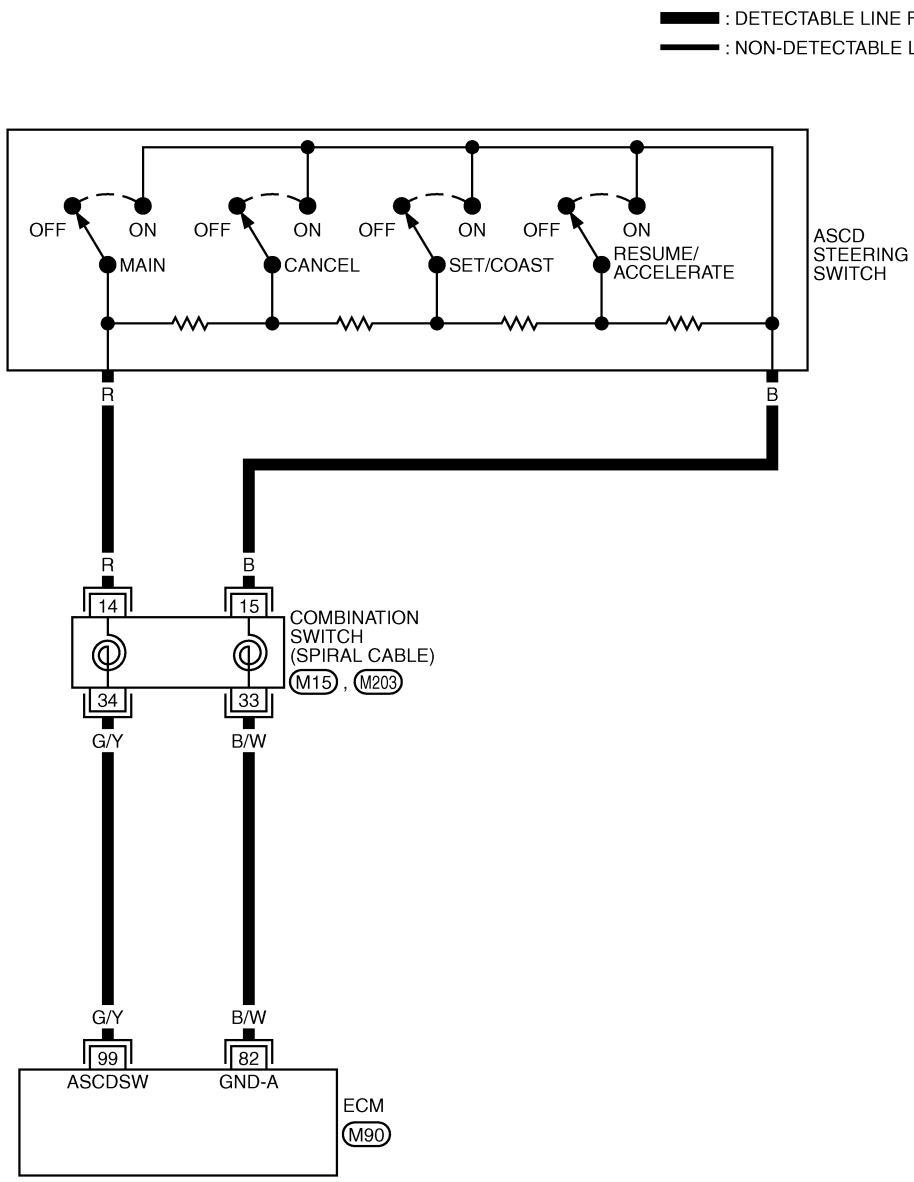

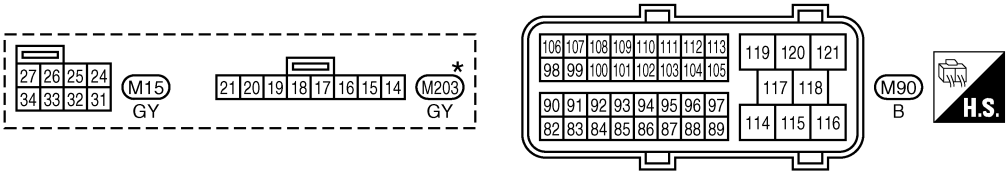

*: THIS CONNECTOR IS NOT SHOWN IN "HARNESS LAYOUT", PG SECTION.

TBWM0733E

Specification data are reference values and are measured between each terminal and ground.

CAUTION:

Do not use ECM ground terminals when measuring input/output voltage. Doing so may result in damage to the ECM's transistor. Use a ground other than ECM terminals, such as the ground.

TERMINAL NO.	WIRE COLOR	ITEM	CONDITION	DATA (DC Voltage)
82	B/W	Sensor ground (ASCD steering switch)	**[Engine is running]** ● **Warm-up condition** ● Idle speed	Approximately 0V
99	G/Y	ASCD steering switch (models with ASCD system)	**[Ignition switch: ON]** ● ASCD steering switch: OFF	Approximately 4.0V
			[Ignition switch: ON] ● MAIN switch: Pressed	Approximately 0V
			[Ignition switch: ON] ● CANCEL switch: Pressed	Approximately 1.0V
			[Ignition switch: ON] ● RESUME/ACCELERATE switch: Pressed	Approximately 3.0V
			[Ignition switch: ON] ● SET/COAST switch: Pressed	Approximately 2.0V

Diagnostic Procedure

ABS006WE

1. CHECK GROUND CONNECTIONS

1. Turn ignition switch OFF.
2. Loosen and retighten ground three screws on the body. Refer to EC-170, "Ground Inspection" .

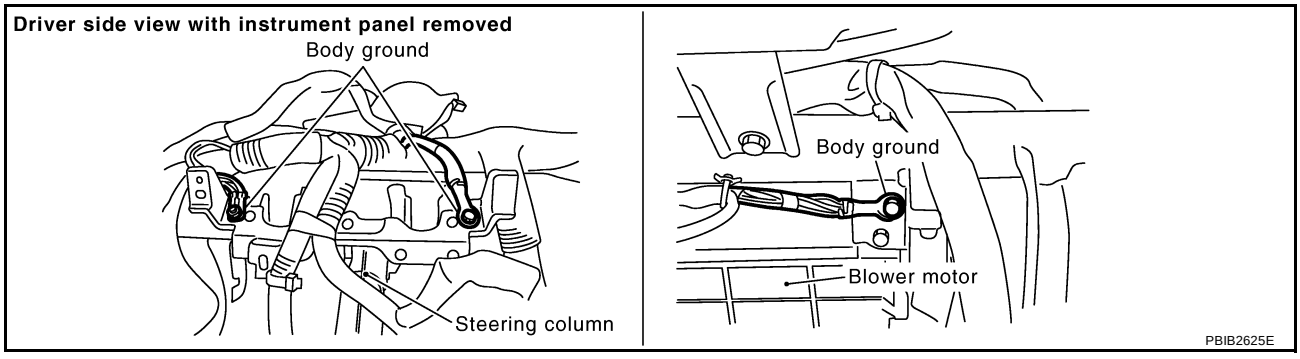

OK or NG

OK >> GO TO 2.
NG >> Repair or replace ground connections.

2. CHECK ASCD STEERING SWITCH CIRCUIT

With CONSULT-II

1. Turn ignition switch ON.
2. Select “MAIN SW”, “RESUME/ACC SW”, “SET SW” and “CANCEL SW” in “DATA MONITOR” mode with CONSULT-II.
3. Check each item indication under the following conditions.

Switch	Monitor item	Condition	Indication
MAIN switch	MAIN SW	Pressed	ON
		Released	OFF
CANCEL switch	CANCEL SW	Pressed	ON
		Released	OFF
RESUME/ACCELERATE switch	RESUME/ACC SW	Pressed	ON
		Released	OFF
SET/COAST switch	SET SW	Pressed	ON
		Released	OFF

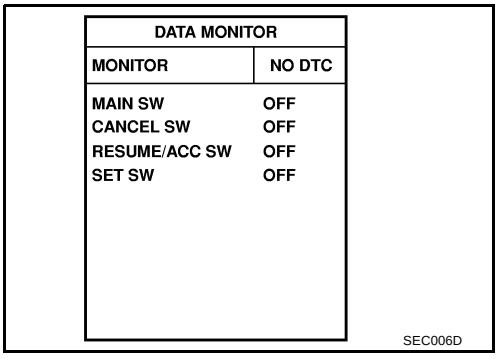

Without CONSULT-II

1. Turn ignition switch ON.
2. Check voltage between ECM terminal 99 and ground with pressing each button.

Switch	Condition	Voltage [V]
MAIN switch	Pressed	Approx. 0
	Released	Approx. 4.0
CANCEL switch	Pressed	Approx. 1.0
	Released	Approx. 4.0
RESUME/ACCELERATE switch	Pressed	Approx. 3.0
	Released	Approx. 4.0
SET/COAST switch	Pressed	Approx. 2.0
	Released	Approx. 4.0

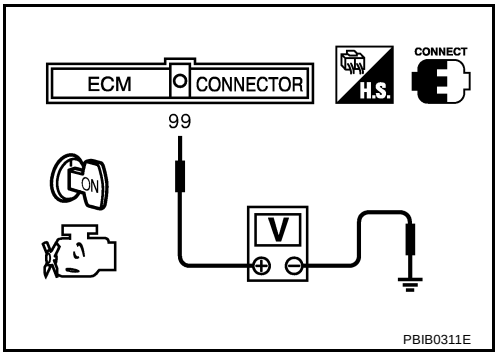

OK or NG

OK >> GO TO 8.
NG >> GO TO 3.

3. CHECK ASCD STEERING SWITCH GROUND CIRCUIT FOR OPEN AND SHORT

1. Turn ignition switch OFF.
2. Disconnect combination switch harness connector.
3. Disconnect ECM harness connector.
4. Check harness continuity between combination switch terminal 15 and ECM terminal 82. Refer to Wiring Diagram.

   Continuity should exist.

5. Also check harness for short to ground and short to power.

OK or NG

OK >> GO TO 5.
NG >> GO TO 4.

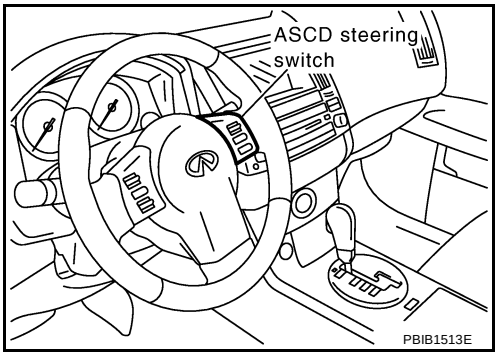

4. DETECT MALFUNCTIONING PART

Check the following.
- Combination switch (spiral cable)
- Harness for open and short between ECM and combination switch

>> Repair open circuit or short to power in harness or connectors.

5. CHECK ASCD STEERING SWITCH INPUT SIGNAL CIRCUIT FOR OPEN AND SHORT

1. Check harness continuity between ECM terminal 99 and combination switch terminal 14.
   Refer to Wiring Diagram.

   Continuity should exist.

2. Also check harness for short to ground and short to power.

OK or NG

OK >> GO TO 7.
NG >> GO TO 6.

6. DETECT MALFUNCTIONING PART

Check the following.
- Combination switch (spiral cable)
- Harness for open and short between ECM and combination switch

>> Repair open circuit or short to ground or short to power in harness or connectors.

7. CHECK ASCD STEERING SWITCH

Refer to EC-586, "Component Inspection" .

OK or NG

OK >> GO TO 8.
NG >> Replace steering wheel.

8. CHECK INTERMITTENT INCIDENT

Refer to EC-163, "TROUBLE DIAGNOSIS FOR INTERMITTENT INCIDENT" .

>> **INSPECTION END**

Component Inspection

ABS006WF

ASCD STEERING SWITCH

1. Disconnect combination switch (spiral cable) harness connector.
2. Check continuity between combination switch (spiral cable) terminals 14 and 15 with pushing each switch.

Switch	Condition	Resistance [Ω]
MAIN switch	Pressed	Approx. 0
	Released	Approx. 4,000
CANCEL switch	Pressed	Approx. 250
	Released	Approx. 4,000
RESUME/ACCELERATE switch	Pressed	Approx. 1,480
	Released	Approx. 4,000
SET/COAST switch	Pressed	Approx. 660
	Released	Approx. 4,000

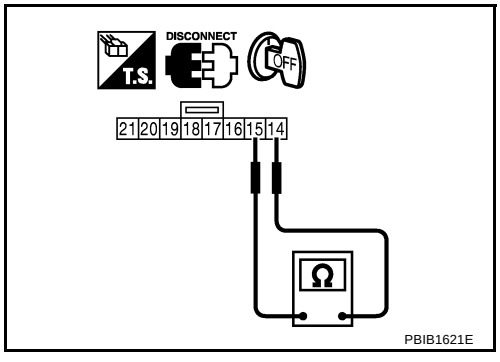

DTC P1568 ICC FUNCTION

PFP:18995

On Board Diagnosis Logic

ABS006WG

NOTE:

- **If DTC P1568 is displayed with DTC U1000, U1001, first perform the trouble diagnosis for DTC U1000, U1001. Refer to EC-171 .**
- **If DTC P1568 is displayed with DTC P0605, first perform the trouble diagnosis for DTC P0605. Refer to EC-402**
- **This self-diagnosis has the one trip detection logic.**
- **The MIL will not light up for this self-diagnosis.**

DTC No.	Trouble Diagnosis Name	DTC Detecting Condition	Possible Cause
P1568 1568	ICC function	ECM detects a difference between signals from ICC unit is out of specified range.	● Harness or connectors (The CAN communication line is open or shorted.) ● ICC unit ● ECM

DTC Confirmation Procedure

ABS006WH

CAUTION:

Always drive vehicle at a safe speed.

NOTE:

- If DTC Confirmation Procedure has been previously conducted, always turn ignition switch OFF and wait at least 10 seconds before conducting the next test.
- **Step 4 may be conducted with the drive wheels lifted in the shop or by driving the vehicle. If a road test is expected to be easier, it is unnecessary to lift the vehicle.**

WITH CONSULT-II

1. Turn ignition switch ON.
2. Select “DATA MONITOR” mode with CONSULT-II.
3. Press MAIN switch on ICC steering switch.
4. Drive the vehicle at more than 40 km/h (25 MPH).
5. Press SET/COAST switch.
6. If DTC is detected, go to EC-587, "Diagnostic Procedure" .

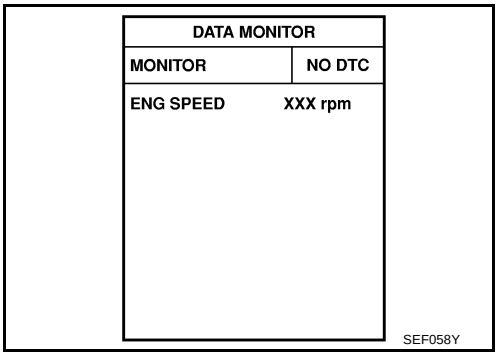

WITH GST

Follow the procedure “WITH CONSULT-II” above.

Diagnostic Procedure

ABS006WI

1. REPLACE ICC UNIT

1. Replace ICC unit.
2. Perform ACS-9, "ACTION TEST" .
3. Check DTC of ICC unit. Refer to ACS-41, "TROUBLE DIAGNOSIS FOR SELF-DIAGNOSTIC ITEMS" .

>> **INSPECTION END**

DTC P1572 ICC BRAKE SWITCH

PFP:25320

Component Description

ABS007Z6

When the brake pedal is depressed, ICC brake switch is turned OFF and stop lamp switch is turned ON. ECM detects the state of the brake pedal by this input of two kinds (ON/OFF signal).
Refer to ACS-6, "DESCRIPTION" for the ICC function.

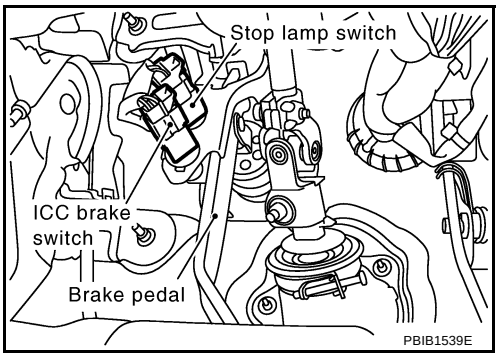

CONSULT-II Reference Value in Data Monitor Mode

ABS007Z7

Specification data are reference values.

MONITOR ITEM	CONDITION		SPECIFICATION
BRAKE SW1 (ICC brake switch)	● Ignition switch: ON	● Brake pedal: Fully released	ON
		● Brake pedal: Slightly depressed	OFF
BRAKE SW2 (stop lamp switch)	● Ignition switch: ON	● Brake pedal: Fully released	OFF
		● Brake pedal: Slightly depressed	ON

On Board Diagnosis Logic

ABS007Z8

This self-diagnosis has the one trip detection logic.
The MIL will not light up for this diagnosis.

NOTE:

- **If DTC P1572 is displayed with DTC P0605, first perform the trouble diagnosis for DTC P0605. Refer to EC-402, "DTC P0605 ECM"**
- **This self-diagnosis has the one trip detection logic. When malfunction A is detected, DTC is not stored in ECM memory. And in that case, 1st trip DTC and 1st trip freeze frame data are displayed. 1st trip DTC is erased when ignition switch OFF. And even when malfunction A is detected in two consecutive trips, DTC is not stored in ECM memory.**

DTC No.	Trouble Diagnosis Name	DTC Detecting Condition		Possible Cause
P1572 1572	ICC brake switch	A)	When the vehicle speed is above 30km/h (19 MPH), ON signals from the stop lamp switch and the ICC brake switch are sent to ECM at the same time.	● Harness or connectors (The stop lamp switch circuit is shorted.) ● Harness or connectors (The ICC brake switch circuit is shorted.) ● Stop lamp switch ● ICC brake switch ● ICC brake hold relay ● Incorrect stop lamp switch installation ● Incorrect ICC brake switch installation ● ECM
		B)	ICC brake switch signal is not sent to ECM for extremely long time while the vehicle is driving	

DTC Confirmation Procedure

ABS007Z9

CAUTION:
Always drive vehicle at a safe speed.

NOTE:
- If DTC Confirmation Procedure has been previously conducted, always turn ignition switch OFF and wait at least 10 seconds before conducting the next test.
- Procedure for malfunction B is not described here. It takes extremely long time to complete procedure for malfunction B. By performing procedure for malfunction A, the incident that causes malfunction B can be detected.

TESTING CONDITION:
Steps 4 and 5 may be conducted with the drive wheels lifted in the shop or by driving the vehicle. If a road test is expected to be easier, it is unnecessary to lift the vehicle.

WITH CONSULT-II

1. Start engine.
2. Select “DATA MONITOR” mode with CONSULT-II.
3. Press MAIN switch and make sure that CRUISE indicator lights up.
4. Drive the vehicle for at least 5 consecutive seconds under the following condition.

VHCL SPEED SE	More than 30 km/h (19 MPH)
Shift lever	Suitable position

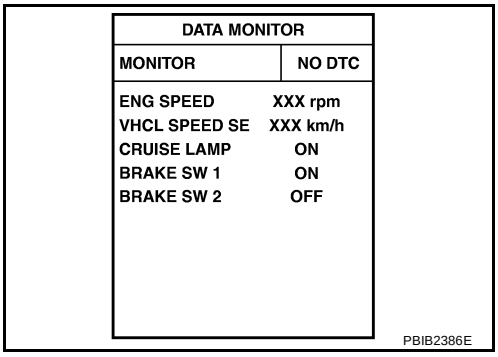

If 1st trip DTC is detected, go to EC-591, "Diagnostic Procedure".
If 1st trip DTC is not detected, go to the following step.

5. Drive the vehicle for at least 5 consecutive seconds under the following condition.

VHCL SPEED SE	More than 30 km/h (19 MPH)
Shift lever	Suitable position
Driving location	Depress the brake pedal for more than five seconds so as not to come off from the above-mentioned vehicle speed.

6. If 1st trip DTC is detected, go to EC-591, "Diagnostic Procedure" .

WITH GST

Follow the procedure “WITH CONSULT-II” above.

Wiring Diagram

ABS007ZA

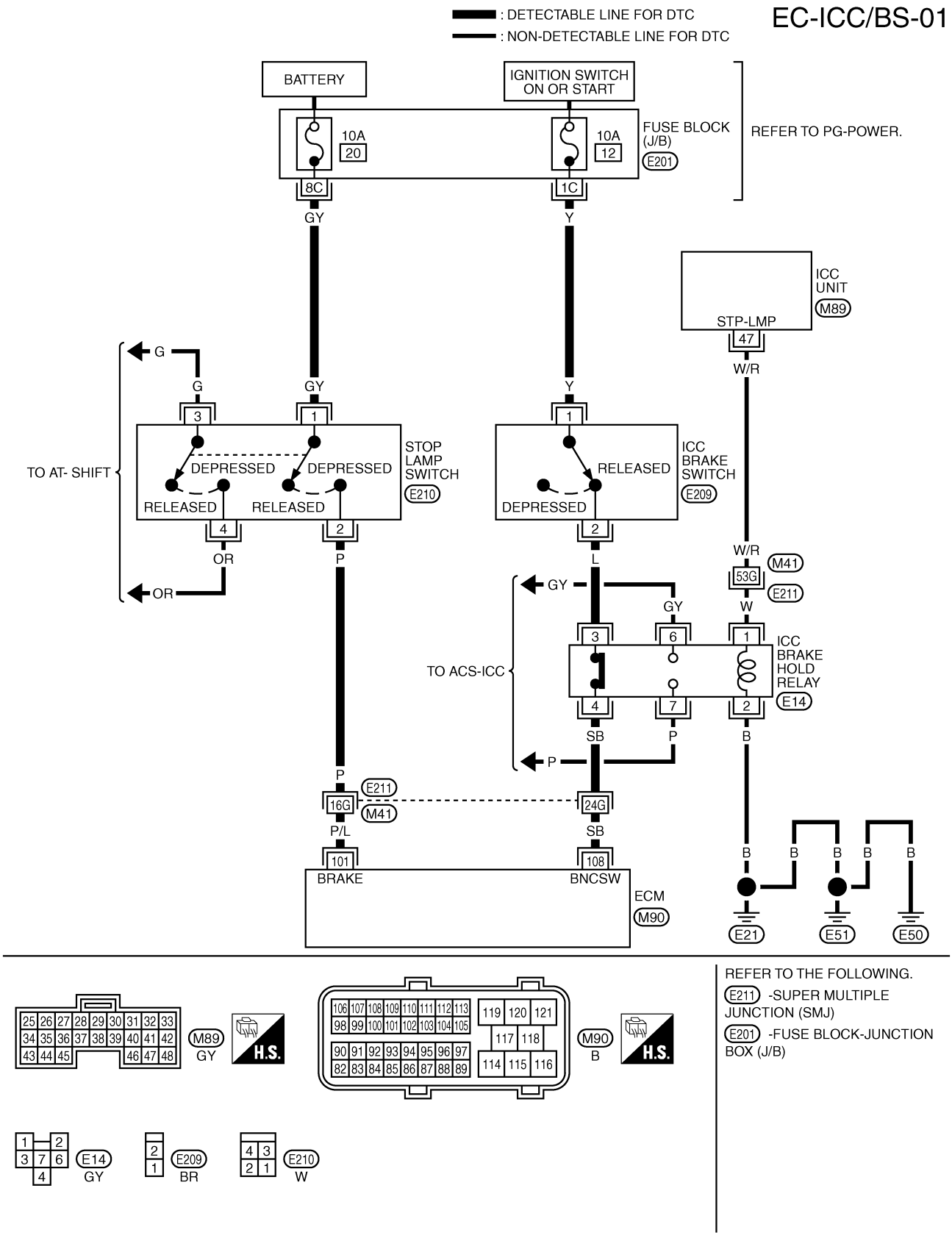

Specification data are reference values and are measured between each terminal and ground.

CAUTION:

Do not use ECM ground terminals when measuring input/output voltage. Doing so may result in damage to the ECM's transistor. Use a ground other than ECM terminals, such as the ground.

TERMINAL NO.	WIRE COLOR	ITEM	CONDITION	DATA (DC Voltage)
101	P/L	Stop lamp switch	**[Ignition switch: OFF]** ● Brake pedal: Fully released	Approximately 0V
			[Ignition switch: OFF] ● Brake pedal: Slightly depressed	BATTERY VOLTAGE (11 - 14V)
108	SB	ICC brake switch	**[Ignition switch: ON]** ● Brake pedal: Slightly depressed	Approximately 0V
			[Ignition switch: ON] ● Brake pedal: Fully released	BATTERY VOLTAGE (11 - 14V)

Diagnostic Procedure

ABS00DC2

1. CHECK OVERALL FUNCTION-I

With CONSULT-II

1. Turn ignition switch ON.
2. Select “BRAKE SW1” in “DATA MONITOR” mode with CONSULT-II.
3. Check “BRAKE SW1” indication under the following conditions.

CONDITION	INDICATION
Brake pedal: Slightly depressed	OFF
Brake pedal: Fully released	ON

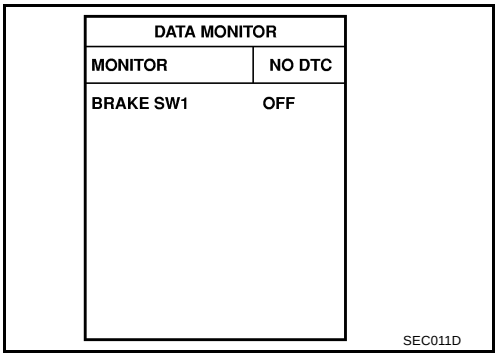

Without CONSULT-II

1. Turn ignition switch ON.
2. Check voltage between ECM terminal 108 and ground under the following conditions.

CONDITION	VOLTAGE
Brake pedal: Slightly depressed	Approximately 0V
Brake pedal: Fully released	Battery voltage

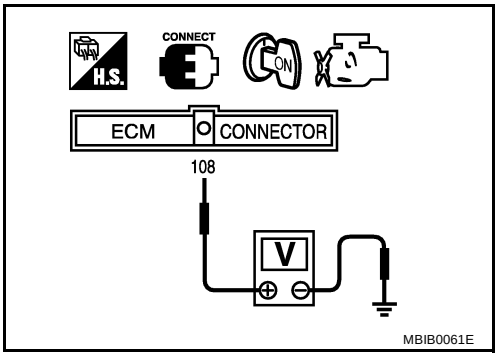

OK or NG

OK >> GO TO 2.
NG >> GO TO 3.

2. CHECK OVERALL FUNCTION-II

With CONSULT-II

Check “BRAKE SW2” indication in “DATA MONITOR” mode.

CONDITION	INDICATION
Brake pedal: Fully released	OFF
Brake pedal: Slightly depressed	ON

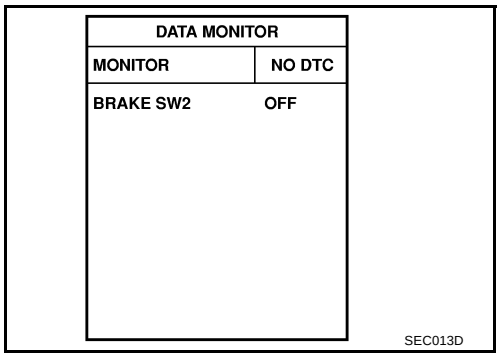

Without CONSULT-II

Check voltage between ECM terminal 101 and ground under the following conditions.

CONDITION	VOLTAGE
Brake pedal: Fully released	Approximately 0V
Brake pedal: Slightly depressed	Battery voltage

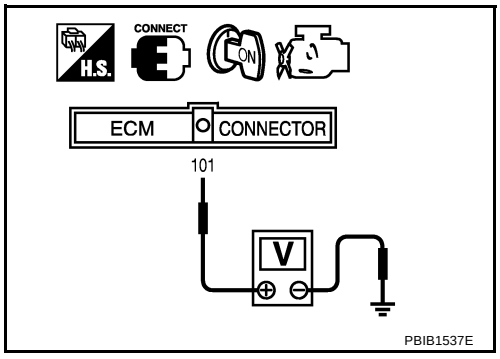

OK or NG

OK >> GO TO 17.
NG >> GO TO 12.

3. CHECK DTC WITH ICC UNIT

Refer to ACS-41, "TROUBLE DIAGNOSIS FOR SELF-DIAGNOSTIC ITEMS" .

OK or NG

OK >> GO TO 4.
NG >> Repair or replace.

4. CHECK ICC BRAKE SWITCH CIRCUIT

1. Turn ignition switch OFF.
2. Disconnect ICC brake hold relay.
3. Turn ignition switch ON.

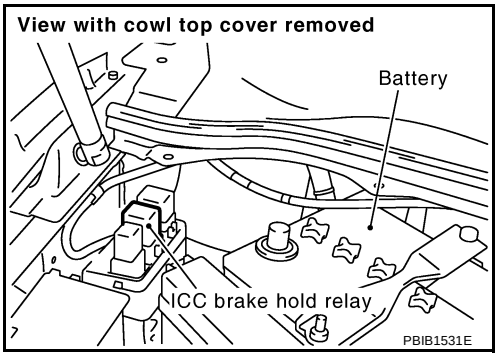

4. Check voltage between ICC brake hold relay terminal 3 and ground with CONSULT-II or tester.

Voltage: Battery voltage

OK or NG

OK >> GO TO 9.
NG >> GO TO 5.

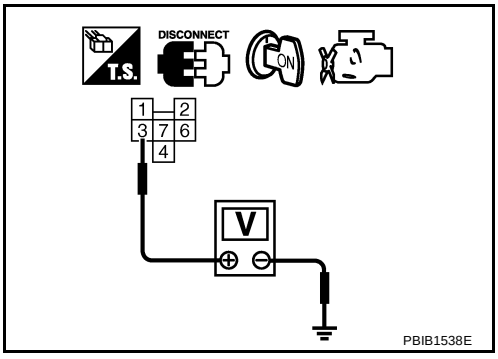

5. CHECK ICC BRAKE SWITCH POWER SUPPLY CIRCUIT

1. Turn ignition switch OFF.
2. Disconnect ICC brake switch harness connector.
3. Turn ignition switch ON.

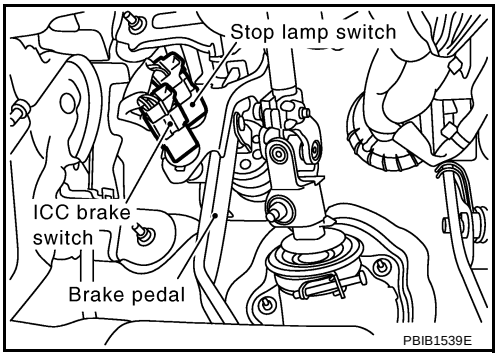

4. Check voltage between ICC brake switch terminal 1 and ground with CONSULT-II or tester.

Voltage: Battery voltage

OK or NG

OK >> GO TO 7.
NG >> GO TO 6.

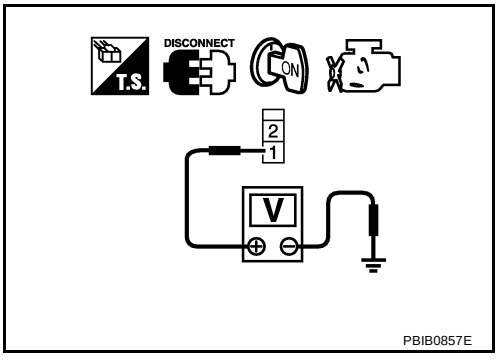

6. DETECT MALFUNCTIONING PART

Check the following.

- Fuse block (J/B) connector E201
- 10A fuse
- Harness for open or short between ICC brake switch and fuse

>> Repair open circuit or short to ground or short to power in harness or connectors.

7. CHECK ICC BRAKE SWITCH INPUT SIGNAL CIRCUIT FOR OPEN AND SHORT-I

1. Turn ignition switch OFF.
2. Check harness continuity between ICC brake hold relay terminal 3 and ICC brake switch terminal 2. Refer to Wiring Diagram.

Continuity should exist.

3. Also check harness for short to ground and short to power.

OK or NG

OK >> GO TO 8.
NG >> Repair open circuit or short to ground or short to power in harness or connectors.

8. CHECK ICC BRAKE SWITCH

Refer to EC-596, "Component Inspection" .

OK or NG

OK >> GO TO 17.
NG >> Replace ICC brake switch.

9. CHECK ICC BRAKE SWITCH INPUT SIGNAL CIRCUIT FOR OPEN AND SHORT-II

1. Turn ignition switch OFF.
2. Disconnect ECM harness connector.
3. Check harness continuity between ICC brake hold relay terminal 4 and ECM terminal 108. Refer Wiring Diagram.

Continuity should exist.

4. Also check harness for short to ground and short to power.

OK or NG

OK >> GO TO 11.
NG >> GO TO 10.

10. DETECT MALFUNCTIONING PART

Check the following.

- Harness connectors E211, M41
- Harness for open or short between ICC brake hold relay and ECM

>> Repair open circuit or short to ground or short to power in harness or connectors.

11. CHECK ICC BRAKE HOLD RELAY

Refer to EC-596, "Component Inspection" .

OK >> GO TO 17.
NG >> Replace ICC brake hold relay.

12. CHECK STOP LAMP SWITCH POWER SUPPLY CIRCUIT

1. Turn ignition switch OFF.
2. Disconnect stop lamp switch harness connector.

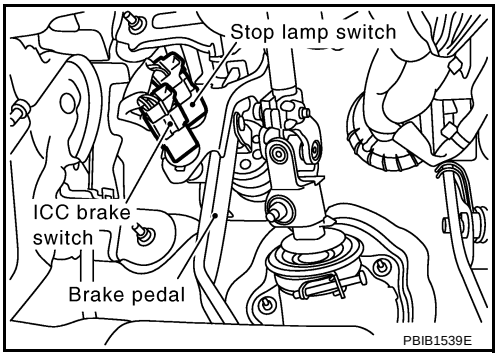

3. Check voltage between stop lamp switch terminal 1 and ground with CONSULT -II or tester.

Voltage: Battery voltage

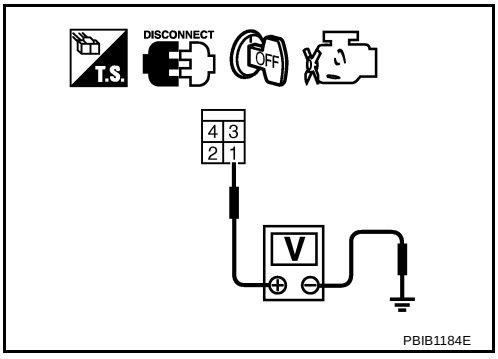

OK or NG

OK >> GO TO 14.
NG >> GO TO 13.

13. DETECT MALFUNCTIONING PART

Check the following.

- Fuse block (J/B) connector E201
- 10A fuse
- Harness for open or short between stop lamp switch and fuse

>> Repair open circuit or short to ground or short to power in harness or connectors.

14. CHECK STOP LAMP SWITCH INPUT SIGNAL CIRCUIT FOR OPEN AND SHORT

1. Disconnect ECM harness connector.
2. Check harness continuity between ECM terminal 101 and stop lamp switch terminal 2. Refer to Wiring Diagram.

Continuity should exist.

3. Also check harness for short to ground and short to power.

OK or NG

OK >> GO TO 16.
NG >> GO TO 15.

15. DETECT MALFUNCTIONING PART

Check the following.

- Harness connectors E211, M41
- Harness for open or short between ECM and stop lamp switch

>> Repair open circuit or short to ground or short to power in harness or connectors.

16. CHECK STOP LAMP SWITCH

Refer to EC-596, "Component Inspection"

OK or NG

OK >> GO TO 17.
NG >> Replace stop lamp switch.

17. CHECK INTERMITTENT INCIDENT

Refer to EC-163, "TROUBLE DIAGNOSIS FOR INTERMITTENT INCIDENT" .

>> **INSPECTION END**

Component Inspection

ABS007ZC

ICC BRAKE SWITCH

1. Turn ignition switch OFF.
2. Disconnect ICC brake switch harness connector.
3. Check continuity between ICC brake switch terminals 1 and 2 under the following conditions.

Condition	Continuity
Brake pedal: Fully released.	Should exist.
Brake pedal: Slightly depressed.	Should not exist.

If NG, adjust ICC brake switch installation, refer to BR-6, "BRAKE PEDAL" , and perform step 3 again.

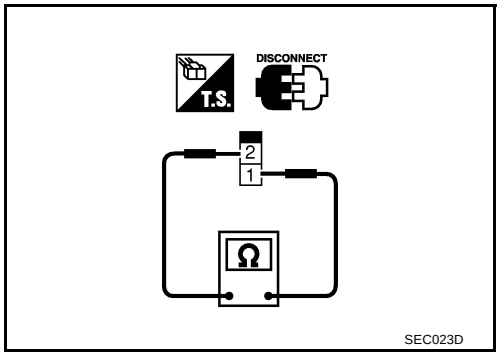

STOP LAMP SWITCH

1. Turn ignition switch OFF.
2. Disconnect stop lamp switch harness connector.
3. Check continuity between stop lamp switch terminals 1 and 2 under the following conditions.

Condition	Continuity
Brake pedal: Fully released.	Should not exist.
Brake pedal: Slightly depressed.	Should exist.

If NG, adjust stop lamp switch installation, refer to BR-6, "BRAKE PEDAL" , and perform step 3 again.

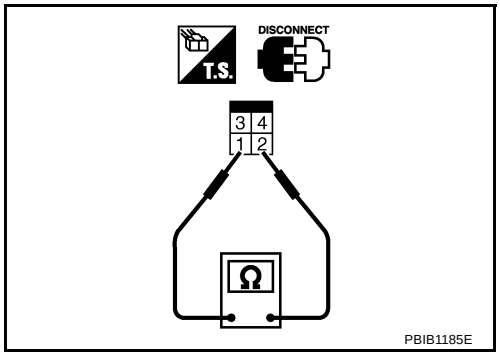

ICC BRAKE HOLD RELAY

1. Apply 12V direct current between ICC brake hold relay terminals 1 and 2.
2. Check continuity between relay terminals 3 and 4, 6 and 7 under the following conditions.

Condition	Between terminals	Continuity
12V direct current supply between terminals 1 and 2	3 and 4	Should not exist
	6 and 7	Should exist
No current supply	3 and 4	Should exist
	6 and 7	Should not exist

3. If NG, replace ICC brake hold relay.

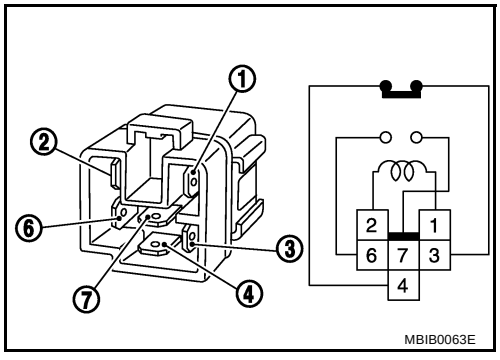

DTC P1572 ASCD BRAKE SWITCH

PFP:25320

Component Description

ABS006WJ

When the brake pedal is depressed, ASCD brake switch is turned OFF and stop lamp switch is turned ON. ECM detects the state of the brake pedal by this input of two kinds (ON/OFF signal).
Refer to EC-36, "AUTOMATIC SPEED CONTROL DEVICE (ASCD)" for the ASCD function.

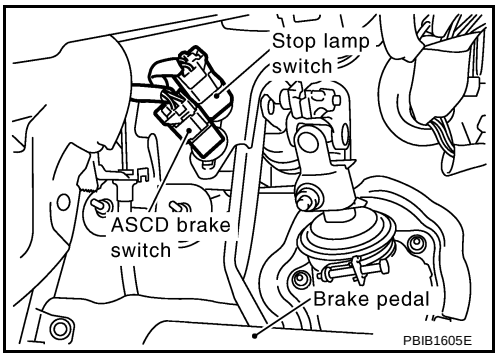

CONSULT-II Reference Value in Data Monitor Mode

ABS006WK

Specification data are reference values.

MONITOR ITEM	CONDITION		SPECIFICATION
BRAKE SW1 (ASCD brake switch)	● Ignition switch: ON	Brake pedal: Fully released	ON
		Brake pedal: Slightly depressed	OFF
BRAKE SW2 (Stop lamp switch)	● Ignition switch: ON	Brake pedal: Fully released	OFF
		Brake pedal: Slightly depressed	ON

On Board Diagnosis Logic

ABS006WL

This self-diagnosis has the one trip detection logic.
The MIL will not light up for this diagnosis.

NOTE:

- **If DTC P1572 is displayed with DTC P0605, first perform the trouble diagnosis for DTC P0605. Refer to EC-402, "DTC P0605 ECM"**
- **This self-diagnosis has the one trip detection logic. When malfunction A is detected, DTC is not stored in ECM memory. And in that case, 1st trip DTC and 1st trip freeze frame data are displayed. 1st trip DTC is erased when ignition switch OFF. And even when malfunction A is detected in two consecutive trips, DTC is not stored in ECM memory.**

DTC No.	Trouble Diagnosis Name	DTC Detecting Condition		Possible Cause
P1572 1572	ASCD brake switch	A)	When the vehicle speed is above 30km/h (19 MPH), ON signals from the stop lamp switch and the ASCD brake switch are sent to ECM at the same time.	● Harness or connectors (The stop lamp switch circuit is shorted.) ● Harness or connectors (The ASCD brake switch circuit is shorted.) ● Stop lamp switch ● ASCD brake switch ● Incorrect stop lamp switch installation ● Incorrect ASCD brake switch installation ● ECM
		B)	ASCD brake switch signal is not sent to ECM for extremely long time while the vehicle is driving	

DTC Confirmation Procedure

ABS006WM

CAUTION:

Always drive vehicle at a safe speed.

NOTE:

- If DTC Confirmation Procedure has been previously conducted, always turn ignition switch OFF and wait at least 10 seconds before conducting the next test.
- Procedure for malfunction B is not described here. It takes extremely long time to complete procedure for malfunction B. By performing procedure for malfunction A, the incident that causes malfunction B can be detected.

TESTING CONDITION:

Steps 4 and 5 may be conducted with the drive wheels lifted in the shop or by driving the vehicle. If a road test is expected to be easier, it is unnecessary to lift the vehicle.

WITH CONSULT-II

1. Start engine.
2. Select “DATA MONITOR” mode with CONSULT-II.
3. Press MAIN switch and make sure that CRUISE indicator lights up.
4. Drive the vehicle for at least 5 consecutive seconds under the following condition.

VHCL SPEED SE	More than 30 km/h (19 MPH)
Shift lever	Suitable position

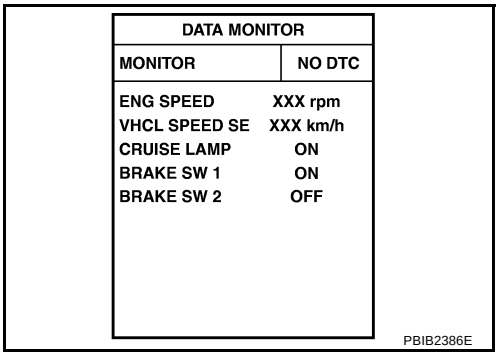

DATA MONITOR	
MONITOR	NO DTC
ENG SPEED	XXX rpm
VHCL SPEED SE	XXX km/h
CRUISE LAMP	ON
BRAKE SW 1	ON
BRAKE SW 2	OFF

PBIB2386E

If 1st trip DTC is detected, go to EC-600, "Diagnostic Procedure" .

If 1st trip DTC is not detected, go to the following step.

5. Drive the vehicle for at least 5 consecutive seconds under the following condition.

VHCL SPEED SE	More than 30 km/h (19 MPH)
Shift lever	Suitable position
Driving location	Depress the brake pedal for more than five seconds so as not to come off from the above-mentioned vehicle speed.

6. If 1st trip DTC is detected, go to EC-600, "Diagnostic Procedure" .

WITH GST

Follow the procedure “WITH CONSULT-II” above.

Wiring Diagram

ABS006WN

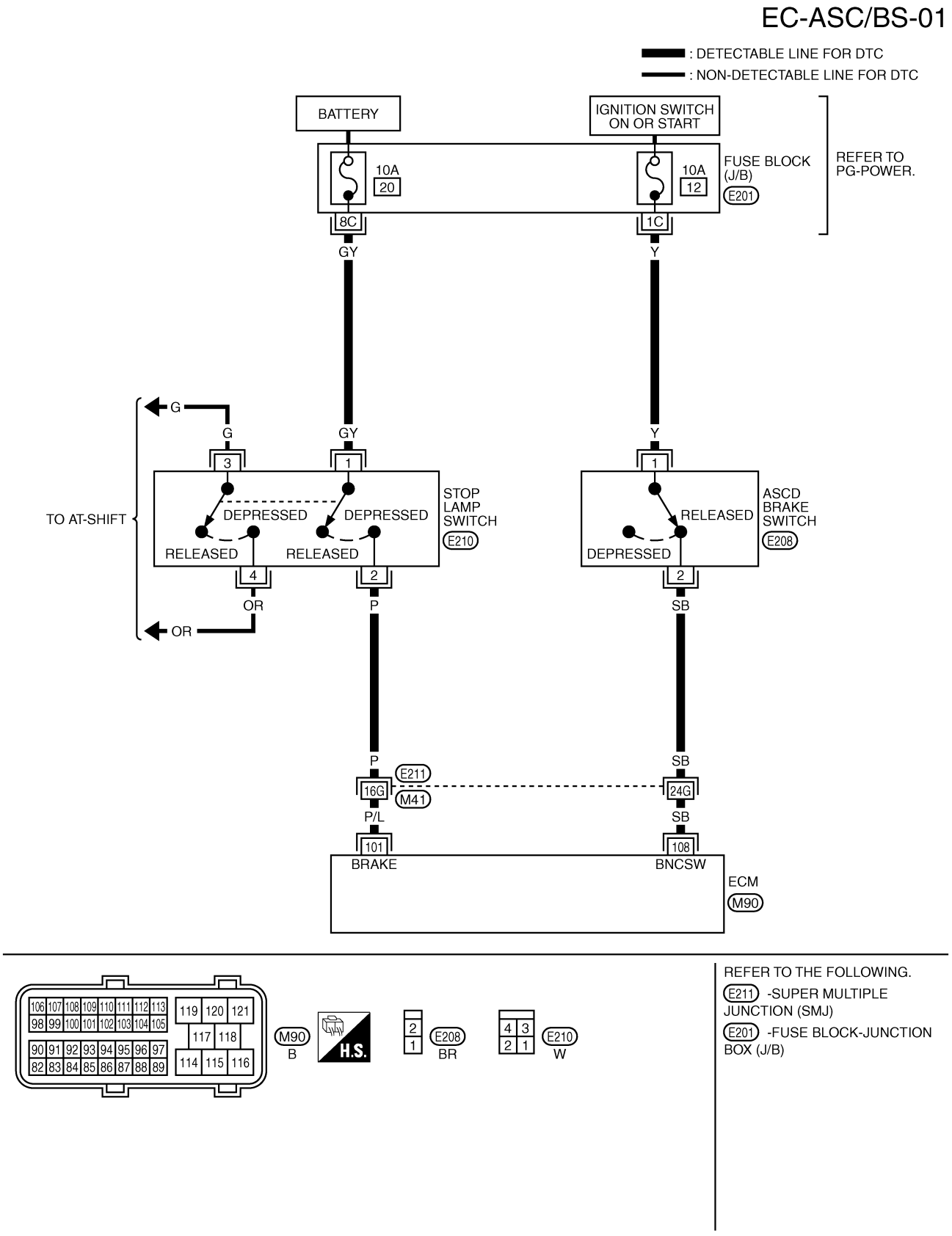

Specification data are reference values and are measured between each terminal and ground.

CAUTION:

Do not use ECM ground terminals when measuring input/output voltage. Doing so may result in damage to the ECM's transistor. Use a ground other than ECM terminals, such as the ground.

TERMINAL NO.	WIRE COLOR	ITEM	CONDITION	DATA (DC Voltage)
101	P/L	Stop lamp switch	**[Ignition switch: OFF]** ● Brake pedal: Fully released	Approximately 0V
			[Ignition switch: OFF] ● Brake pedal: Slightly depressed	BATTERY VOLTAGE (11 - 14V)
108	SB	ASCD brake switch	**[Ignition switch: ON]** ● Brake pedal: Slightly depressed	Approximately 0V
			[Ignition switch: ON] ● Brake pedal: Fully released	BATTERY VOLTAGE (11 - 14V)

Diagnostic Procedure

ABS006WO

1. CHECK OVERALL FUNCTION-I

With CONSULT-II

1. Turn ignition switch ON.
2. Select “BRAKE SW1” in “DATA MONITOR” mode with CONSULT-II.
3. Check “BRAKE SW1” indication under the following conditions.

CONDITION	INDICATION
Brake pedal: Slightly depressed	OFF
Brake pedal: Fully released	ON

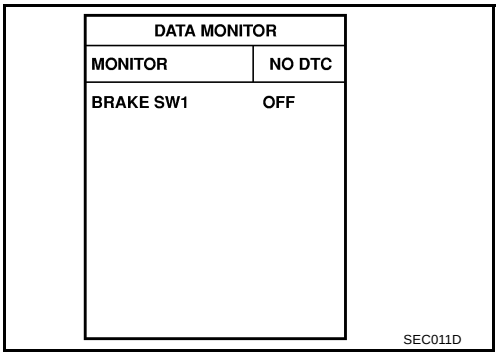

Without CONSULT-II

1. Turn ignition switch ON.
2. Check voltage between ECM terminal 108 and ground under the following conditions.

CONDITION	VOLTAGE
Brake pedal: Slightly depressed	Approximately 0V
Brake pedal: Fully released	Battery voltage

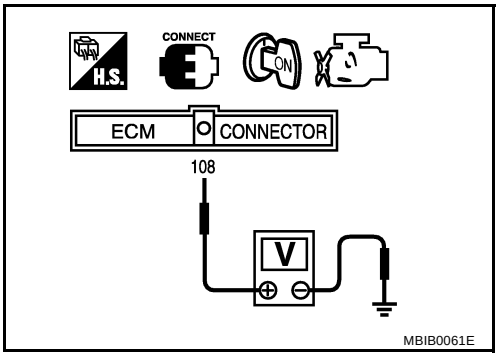

OK or NG

OK >> GO TO 2.
NG >> GO TO 3.

2. CHECK OVERALL FUNCTION-II

With CONSULT-II

Check “BRAKE SW2” indication in “DATA MONITOR” mode.

CONDITION	INDICATION
Brake pedal: Fully released	OFF
Brake pedal: Slightly depressed	ON

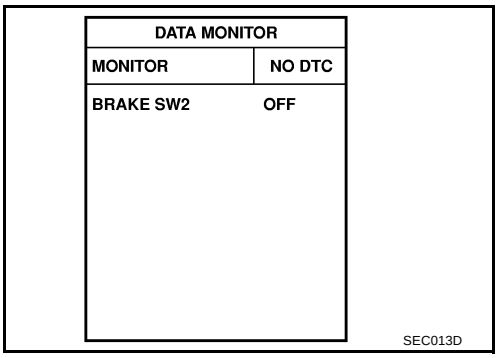

Without CONSULT-II

Check voltage between ECM terminal 101 and ground under the following conditions.

CONDITION	VOLTAGE
Brake pedal: Fully released	Approximately 0V
Brake pedal: Slightly depressed	Battery voltage

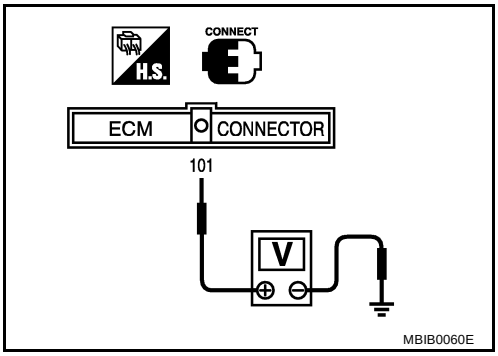

OK or NG

OK >> GO TO 13.
NG >> GO TO 8.

3. CHECK ASCD BRAKE SWITCH POWER SUPPLY CIRCUIT

1. Turn ignition switch OFF.
2. Disconnect ASCD brake switch harness connector.
3. Turn ignition switch ON.

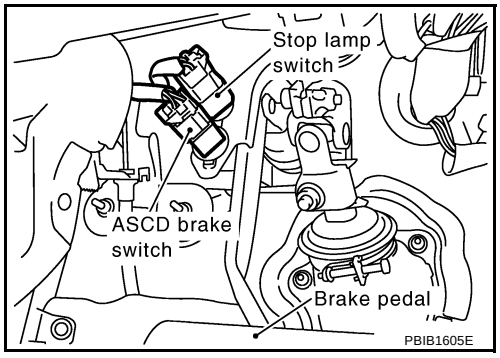

4. Check voltage between ASCD brake switch terminal 1 and ground with CONSULT-II or tester.

Voltage: Battery voltage

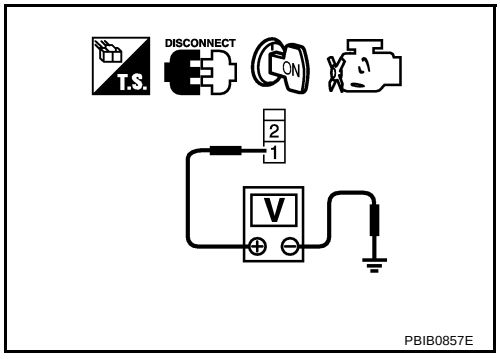

OK or NG

OK >> GO TO 5.
NG >> GO TO 4.

4. DETECT MALFUNCTIONING PART

Check the following.

- Fuse block (J/B) connector E201
- 10A fuse
- Harness for open or short between ASCD brake switch and fuse

>> Repair open circuit or short to ground or short to power in harness or connectors.

5. CHECK ASCD BRAKE SWITCH INPUT SIGNAL CIRCUIT FOR OPEN AND SHORT

1. Turn ignition switch OFF.
2. Disconnect ECM harness connector.
3. Check harness continuity between ECM terminal 108 and ASCD brake switch terminal 2. Refer to Wiring Diagram.

Continuity should exist.

4. Also check harness for short to ground and short to power.

OK or NG

OK >> GO TO 7.
NG >> GO TO 6.

6. DETECT MALFUNCTIONING PART

Check the following.

- Harness connectors E211, M41
- Harness for open or short between ECM and ASCD brake switch

>> Repair open circuit or short to ground or short to power in harness or connectors.

7. CHECK ASCD BRAKE SWITCH

Refer to EC-604, "Component Inspection"

OK or NG

OK >> GO TO 13.
NG >> Replace ASCD brake switch.

8. CHECK STOP LAMP SWITCH POWER SUPPLY CIRCUIT

1. Turn ignition switch OFF.
2. Disconnect stop lamp switch harness connector.

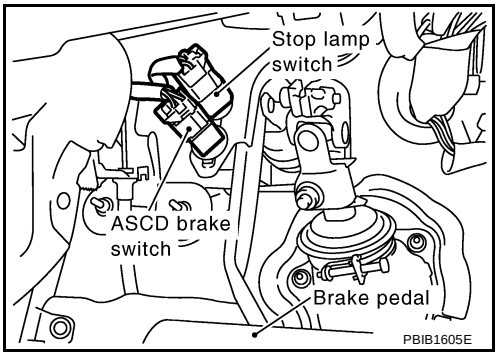

3. Check voltage between stop lamp switch terminal 1 and ground with CONSULT-II or tester.

Voltage: Battery voltage

OK or NG

OK >> GO TO 10.
NG >> GO TO 9.

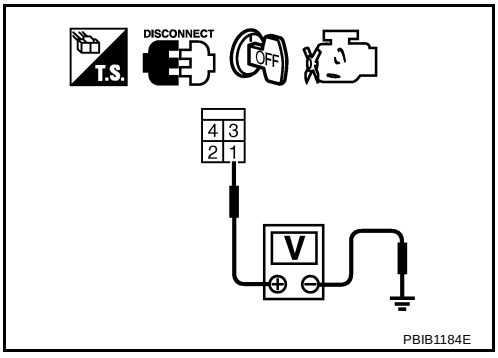

9. DETECT MALFUNCTIONING PART

Check the following.

- Fuse block (J/B) connector E201
- 10A fuse
- Harness for open or short between stop lamp switch and battery

>> Repair open circuit or short to ground or short to power in harness or connectors.

10. CHECK STOP LAMP SWITCH INPUT SIGNAL CIRCUIT FOR OPEN AND SHORT

1. Disconnect ECM harness connector.
2. Check harness continuity between ECM terminal 101 and stop lamp switch terminal 2. Refer to Wiring Diagram.

Continuity should exist.

3. Also check harness for short to ground and short to power.

OK or NG

OK >> GO TO 12.
NG >> GO TO 11.

11. DETECT MALFUNCTIONING PART

Check the following.

- Harness connectors E211, M41
- Harness for open or short between ECM and stop lamp switch

>> Repair open circuit or short to ground or short to power in harness or connectors.

12. CHECK STOP LAMP SWITCH

Refer to EC-604, "Component Inspection"

OK or NG

OK >> GO TO 13.
NG >> Replace stop lamp switch.

13. CHECK INTERMITTENT INCIDENT

Refer to EC-163, "TROUBLE DIAGNOSIS FOR INTERMITTENT INCIDENT" .

>> **INSPECTION END**

Component Inspection

ABS007ZI

ASCD BRAKE SWITCH

1. Turn ignition switch OFF.
2. Disconnect ASCD brake switch harness connector.
3. Check continuity between ASCD brake switch terminals 1 and 2 under the following conditions.

Condition	Continuity
Brake pedal: Fully released.	Should exist.
Brake pedal: Slightly depressed.	Should not exist.

If NG, adjust ASCD brake switch installation, refer to BR-6, "BRAKE PEDAL" , and perform step 3 again.

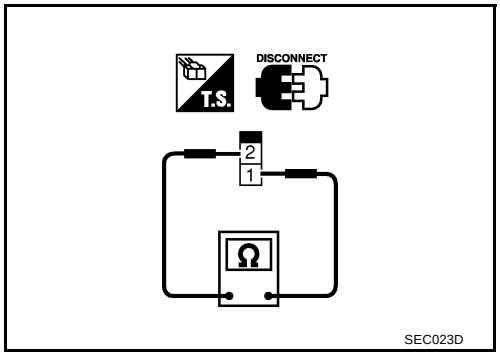

STOP LAMP SWITCH

1. Turn ignition switch OFF.
2. Disconnect stop lamp switch harness connector.
3. Check continuity between stop lamp switch terminals 1 and 2 under the following conditions.

Condition	Continuity
Brake pedal: Fully released.	Should not exist.
Brake pedal: Slightly depressed.	Should exist.

If NG, adjust stop lamp switch installation, refer to BR-6, "BRAKE PEDAL" , and perform step 3 again.

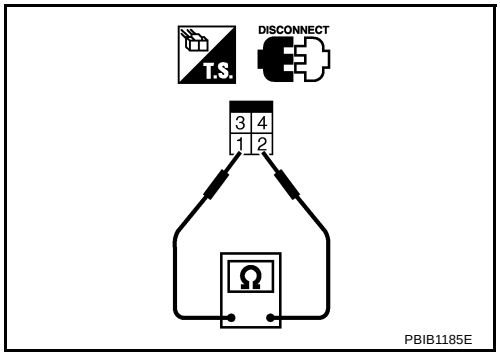

DTC P1574 ICC VEHICLE SPEED SENSOR

PFP:31036

Component Description

ABS007ZD

The ECM receives two vehicle speed signals via CAN communication line. One is sent from “unified meter and A/C amp.”, and the other is from TCM (Transmission control module). The ECM uses these signals for ICC control. Refer to ACS-6, "DESCRIPTION" for ICC functions.

On Board Diagnosis Logic

ABS007ZE

- **This self-diagnosis has the one trip detection logic.**
- **The MIL will not light up for this self-diagnosis.**

NOTE:

- **If DTC P1574 is displayed with DTC U1000, U1001, first perform the trouble diagnosis for DTC U1000, U1001. Refer to EC-171 .**
- **If DTC P1574 is displayed with DTC P0500, first perform the trouble diagnosis for DTC P0500. Refer to EC-391 .**
- **If DTC P1574 is displayed with DTC P0605, first perform the trouble diagnosis for DTC P0605. Refer to EC-402 .**

DTC No.	Trouble Diagnosis Name	DTC Detecting Condition	Possible Cause
P1574 1574	ICC vehicle speed sensor	ECM detects a difference between two vehicle speed signals is out of the specified range.	● Harness or connectors (The CAN communication line is open or shorted.) ● Unified meter and A/C amp. ● ABS actuator and electric unit (control unit) ● Wheel sensor ● TCM ● ECM

DTC Confirmation Procedure

ABS007ZF

CAUTION:
Always drive vehicle at a safe speed.

NOTE:
If DTC Confirmation Procedure has been previously conducted, always turn ignition switch OFF and wait at least 10 seconds before conducting the next test.

TESTING CONDITION:
Step 3 may be conducted with the drive wheels lifted in the shop or by driving the vehicle. If a road test is expected to be easier, it is unnecessary to lift the vehicle.

WITH CONSULT-II

1. Start engine.
2. Select “DATA MONITOR” mode with CONSULT-II.
3. Drive the vehicle at more than 40 km/h (25MPH).
4. If DTC is detected, go to EC-606, "Diagnostic Procedure" .

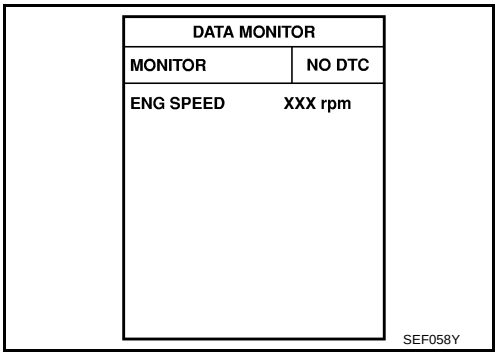

WITH GST

Follow the procedure “WITH CONSULT-II” above.

Diagnostic Procedure

ABS007ZG

1. CHECK DTC WITH TCM

Check DTC with TCM. Refer to AT-39, "ON BOARD DIAGNOSTIC (OBD) SYSTEM" .

OK or NG

OK >> GO TO 2.
NG >> Perform trouble shooting relevant to DTC indicated.

2. CHECK DTC WITH “ABS ACTUATOR AND ELECTRIC UNIT (CONTROL UNIT)”

Refer to BRC-12, "TROUBLE DIAGNOSIS" .

OK or NG

OK >> GO TO 3.
NG >> Repair or replace.

3. CHECK DTC WITH “UNIFIED METER AND A/C AMP”

Refer to DI-5, "COMBINATION METERS" .

>> **INSPECTION END**

DTC P1574 ASCD VEHICLE SPEED SENSOR

PFP:31036

Component Description

ABS006WQ

The ECM receives two vehicle speed signals via CAN communication line. One is sent from “unified meter and A/C amp.”, and the other is from TCM (Transmission control module). The ECM uses these signals for ASCD control. Refer to EC-36, "AUTOMATIC SPEED CONTROL DEVICE (ASCD)" for ASCD functions.

On Board Diagnosis Logic

ABS006WR

This self-diagnosis has the one trip detection logic.
The MIL will not light up for this diagnosis.

NOTE:

- **If DTC P1574 is displayed with DTC U1000, U1001, first perform the trouble diagnosis for DTC U1000, U1001. Refer to EC-171 .**
- **If DTC P1574 is displayed with DTC P0500, first perform the trouble diagnosis for DTC P0500. Refer to EC-391**
- **If DTC P1574 is displayed with DTC P0605, first perform the trouble diagnosis for DTC P0605. Refer to EC-402**

DTC No.	Trouble Diagnosis Name	DTC Detecting Condition	Possible Cause
P1574 1574	ASCD vehicle speed sensor	ECM detects a difference between two vehicle speed signals is out of the specified range.	● Harness or connectors (The CAN communication line is open or shorted.) ● Unified meter and A/C amp. ● ABS actuator and electric unit (control unit) ● Wheel sensor ● TCM ● ECM

DTC Confirmation Procedure

ABS006WS

CAUTION:
Always drive vehicle at a safe speed.

NOTE:
If DTC Confirmation Procedure has been previously conducted, always turn ignition switch OFF and wait at least 10 seconds before conducting the next test.

TESTING CONDITION:
Step 3 may be conducted with the drive wheels lifted in the shop or by driving the vehicle. If a road test is expected to be easier, it is unnecessary to lift the vehicle.

WITH CONSULT-II

1. Start engine.
2. Select “DATA MONITOR” mode with CONSULT-II.
3. Drive the vehicle at more than 40 km/h (25 MPH).
4. If DTC is detected, go to EC-608, "Diagnostic Procedure" .

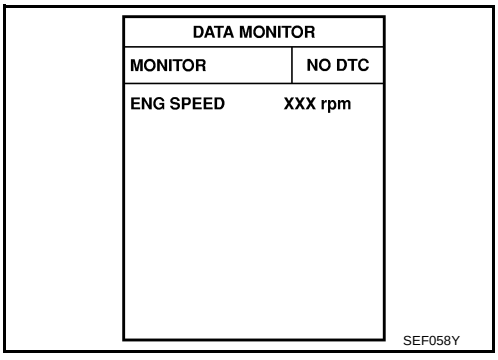

WITH GST

Follow the procedure “WITH CONSULT-II” above.

Diagnostic Procedure

ABS006WT

1. CHECK DTC WITH TCM

Check DTC with TCM. Refer to AT-39, "ON BOARD DIAGNOSTIC (OBD) SYSTEM" .

OK or NG

OK >> GO TO 2.
NG >> Perform trouble shooting relevant to DTC indicated.

2. CHECK DTC WITH “ABS ACTUATOR AND ELECTRIC UNIT (CONTROL UNIT)”

Refer to BRC-12, "TROUBLE DIAGNOSIS" .

OK or NG

OK >> GO TO 3.
NG >> Repair or replace.

3. CHECK DTC WITH “UNIFIED METER AND A/C AMP.”

Refer to DI-5, "COMBINATION METERS" .

>> **INSPECTION END**

DTC P1706 PNP SWITCH

PFP:32006

Component Description

ABS006WU

When the gear position is P or N, park/neutral position (PNP) switch is ON.
ECM detects the position because the continuity of the line (the ON signal) exists.

CONSULT-II Reference Value in Data Monitor Mode

ABS006WV

Specification data are reference values.

MONITOR ITEM	CONDITION		SPECIFICATION
P/N POSI SW	● Ignition switch: ON	Selector lever: P or N	ON
		Selector lever: Except above	OFF

On Board Diagnosis Logic

ABS006WW

DTC No.	Trouble diagnosis name	DTC detecting condition	Possible cause
P1706 1706	Park/neutral position switch	The signal of the park/neutral position (PNP) switch is not changed in the process of engine starting and driving.	● Harness or connectors [The park/neutral position (PNP) switch circuit is open or shorted.] ● Park/neutral position (PNP) switch ● Unified meter and A/C amp.

DTC Confirmation Procedure

ABS006WX

CAUTION:
Always drive vehicle at a safe speed.

NOTE:
If DTC Confirmation Procedure has been previously conducted, always turn ignition switch OFF and wait at least 10 seconds before conducting the next test.

WITH CONSULT-II

1. Turn ignition switch ON.
2. Select “P/N POSI SW” in “DATA MONITOR” mode with CONSULT-II. Then check the “P/N POSI SW” signal under the following conditions.

Position (Selector lever)	Known-good signal
P or N position	ON
Except above position	OFF

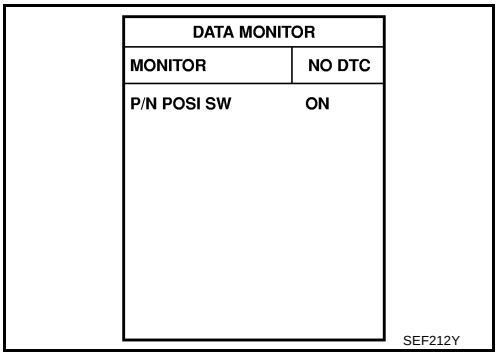

If NG, go to EC-612, "Diagnostic Procedure" .
If OK, go to following step.

3. Select “DATA MONITOR” mode with CONSULT-II.
4. Start engine and warm it up to normal operating temperature.
5. Maintain the following conditions for at least 60 consecutive seconds.

ENG SPEED	1,000 - 6,375 rpm
COOLAN TEMP/S	More than 70°C (158°F)
B/FUEL SCHDL	2.0 - 31.8 msec
VHCL SPEED SE	More than 64 km/h (40 MPH)
Selector lever	Suitable position

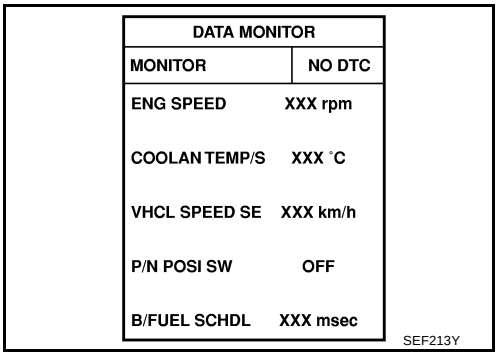

6. If 1st trip DTC is detected, go to EC-612, "Diagnostic Procedure" .

Overall Function Check

ABS006WY

Use this procedure to check the overall function of the park/neutral position (PNP) switch circuit. During this check, a 1st trip DTC might not be confirmed.

WITH GST

1. Turn ignition switch ON.
2. Check voltage between ECM terminal 102 (PNP switch signal) and ground under the following conditions.

Condition (Gear position)	Voltage V (Known-good data)
P or N position	Approx. 0
Except above position	BATTERY VOLTAGE (11 - 14V)

3. If NG, go to EC-612, "Diagnostic Procedure" .

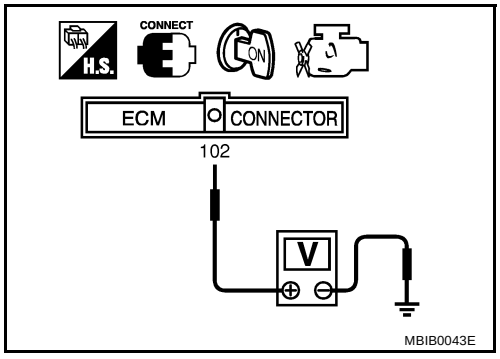

Wiring Diagram

ABS006WZ

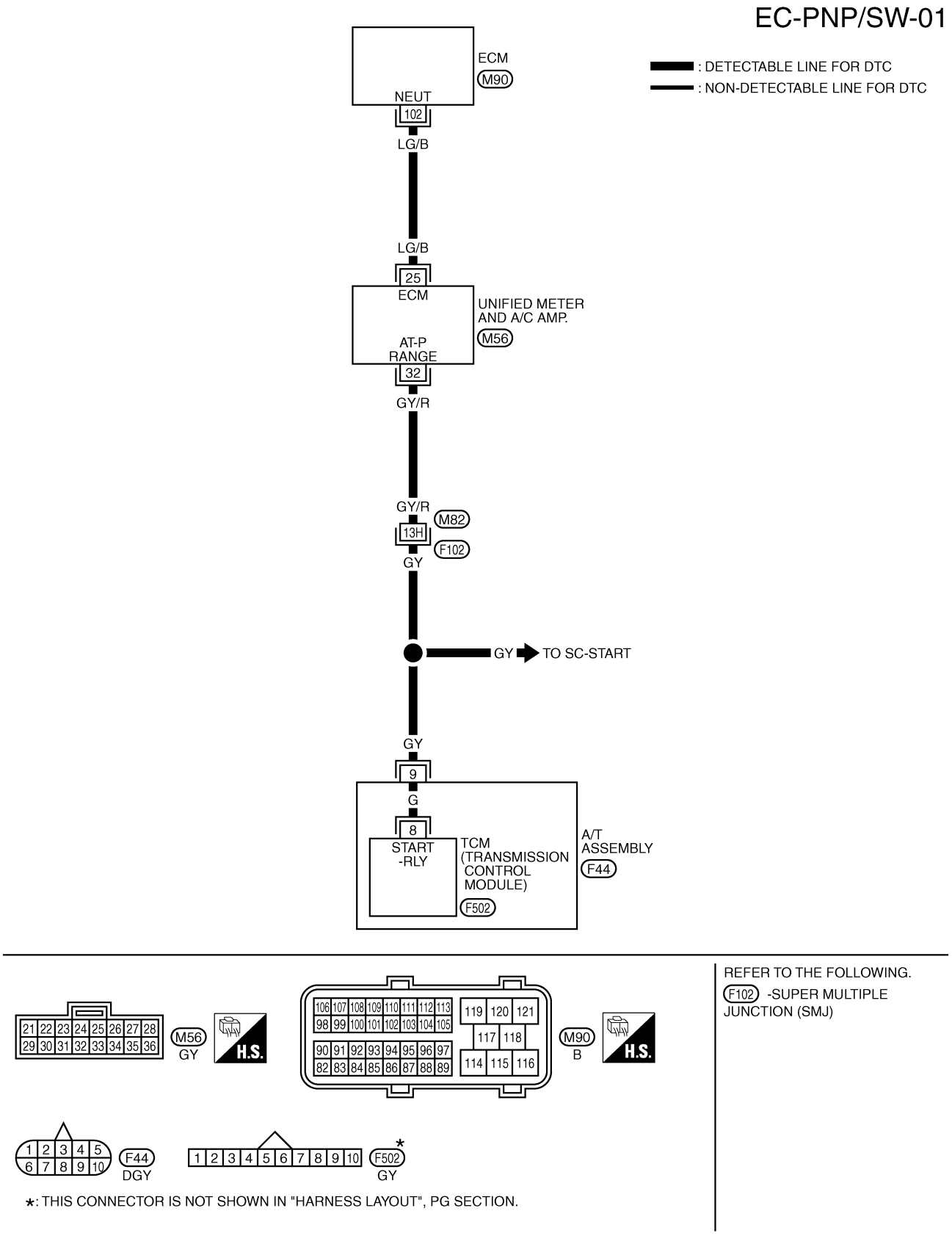

Specification data are reference values and are measured between each terminal and ground.

CAUTION:

Do not use ECM ground terminals when measuring input/output voltage. Doing so may result in damage to the ECM's transistor. Use a ground other than ECM terminals, such as the ground.

TERMINAL NO.	WIRE COLOR	ITEM	CONDITION	DATA (DC Voltage)
102	LG/B	PNP switch	**[Ignition switch: ON]** ● Selector lever: P or N	Approximately 0V
			[Ignition switch: ON] ● Except above position	BATTERY VOLTAGE (11 - 14V)

Diagnostic Procedure

ABS006X0

1. CHECK DTC WITH TCM

Refer to AT-39, "OBD-II Diagnostic Trouble Code (DTC)" .

OK or NG

OK >> GO TO 2.
NG >> Repair or replace.

2. CHECK STARTING SYSTEM

Turn ignition switch OFF, then turn it to START.

Does starter motor operate?

Yes or No

Yes >> GO TO 3.
No >> Refer to SC-10, "STARTING SYSTEM" .

3. CHECK PNP SWITCH INPUT SIGNAL CIRCUIT FOR OPEN AND SHORT-I

1. Turn ignition switch OFF.
2. Disconnect A/T assembly harness connector.
3. Disconnect unified meter and A/C amp. harness connector.
4. Check harness continuity between A/T assembly terminal 9 and “unified meter and A/C amp.” terminal 32. Refer to Wiring Diagram.

   Continuity should exist.

5. Also check harness for short to ground and short to power.

OK or NG

OK >> GO TO 5.
NG >> GO TO 4.

4. DETECT MALFUNCTIONING PART

Check the following.

- Harness connectors F102, M82
- Harness for open or short between A/T assembly and unified meter and A/C amp.

>> Repair open circuit or short to ground or short to power in harness or connectors.

5. CHECK PNP SWITCH INPUT SIGNAL CIRCUIT FOR OPEN AND SHORT-II

1. Disconnect ECM harness connector.
2. Check harness continuity between ECM terminal 102 and “unified meter and A/C amp.” terminal 25. Refer to Wiring Diagram.

   Continuity should exist.

3. Also check harness for short to ground and short to power.

OK or NG

OK >> GO TO 6.
NG >> Repair open circuit or short to ground or short to power in harness or connectors.

6. CHECK PNP SWITCH INPUT SIGNAL CIRCUIT FOR OPEN AND SHORT-III

1. Check harness continuity between A/T assembly terminal 9 and TCM terminal 8. Refer to AT-109, "DTC P0615 START SIGNAL CIRCUIT" .

   Continuity should exist.

2. Also check harness for short to ground and short to power.

OK or NG

OK >> GO TO 7.
NG >> Repair open circuit or short to ground or short to power in harness or connectors.

7. CHECK INTERMITTENT INCIDENT

Refer to EC-854, "TROUBLE DIAGNOSIS FOR INTERMITTENT INCIDENT" .

OK or NG

OK >> GO TO 8.
NG >> Repair or replace.

8. REPLACE “UNIFIED METER AND A/C AMP.”

Refer to DI-28, "UNIFIED METER AND A/C AMP" .

>> **INSPECTION END**

DTC P1805 BRAKE SWITCH

PFP:25320

Description

ABS006X1

Brake switch signal is applied to the ECM through the stop lamp switch when the brake pedal is depressed. This signal is used mainly to decrease the engine speed when the vehicle is driving.

CONSULT-II Reference Value in Data Monitor Mode

ABS006X2

Specification data are reference values.

MONITOR ITEM	CONDITION		SPECIFICATION
BRAKE SW	● Ignition switch: ON	Brake pedal: Fully released	OFF
		Brake pedal: Slightly depressed	ON

On Board Diagnosis Logic

ABS006X3

The MIL will not light up for this diagnosis.

DTC No.	Trouble diagnosis name	DTC detecting condition	Possible cause
P1805 1805	Brake switch	A brake switch signal is not sent to ECM for extremely long time while the vehicle is driving.	● Harness or connectors (Stop lamp switch circuit is open or shorted.) ● Stop lamp switch

FAIL-SAFE MODE

When the malfunction is detected, the ECM enters fail-safe mode.

Engine operating condition in fail-safe mode	
ECM controls the electric throttle control actuator by regulating the throttle opening to a small range. Therefore, acceleration will be poor.	
Vehicle condition	Driving condition
When engine is idling	Normal
When accelerating	Poor acceleration

DTC Confirmation Procedure

ABS006X4

NOTE:
If DTC Confirmation Procedure has been previously conducted, always turn ignition switch OFF and wait at least 10 seconds before conducting the next test.

WITH CONSULT-II

1. Turn ignition switch ON.
2. Fully depress the brake pedal for at least 5 seconds.
3. Erase the DTC with CONSULT-II.
4. Select “DATA MONITOR” mode with CONSULT-II.
5. If 1st trip DTC is detected, go to EC-616, "Diagnostic Procedure"
.

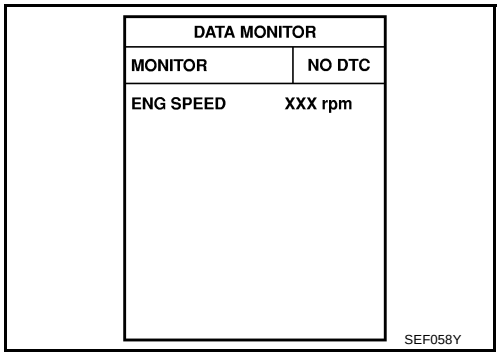

WITH GST

Follow the procedure “WITH CONSULT-II” above.

Wiring Diagram

ABS006X5

EC-BRK/SW-01

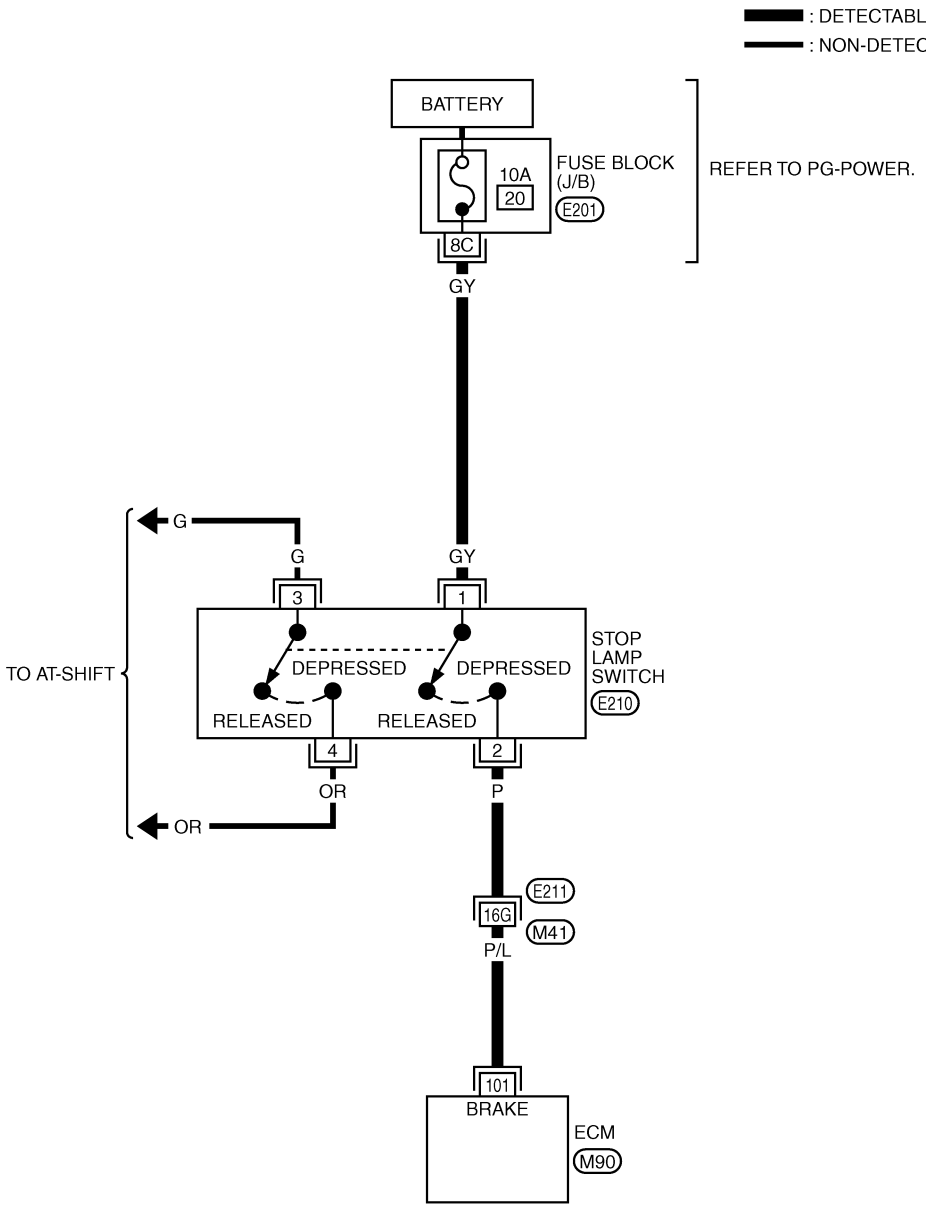

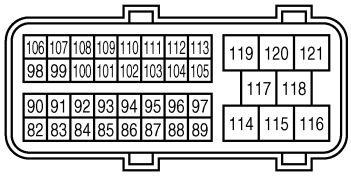

M90
B

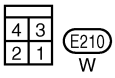

E210
W

REFER TO THE FOLLOWING.

E211 -SUPER MULTIPLE JUNCTION (SMJ)

E201 -FUSE BLOCK-JUNCTION BOX (J/B)

TBWM0405E

Specification data are reference values and are measured between each terminal and ground.

CAUTION:

Do not use ECM ground terminals when measuring input/output voltage. Doing so may result in damage to the ECM's transistor. Use a ground other than ECM terminals, such as the ground.

TERMINAL NO.	WIRE COLOR	ITEM	CONDITION	DATA (DC Voltage)
101	P/L	Stop lamp switch	**[Ignition switch: OFF]** ● Brake pedal: Fully released	Approximately 0V
			[Ignition switch: OFF] ● Brake pedal: Slightly depressed	BATTERY VOLTAGE (11 - 14V)

Diagnostic Procedure

ABS006X6

1. CHECK STOP LAMP SWITCH CIRCUIT

1. Turn ignition switch OFF.
2. Check the stop lamp when depressing and releasing the brake pedal.

Brake pedal	Stop lamp
Fully released	Not illuminated
Slightly depressed	Illuminated

OK or NG

OK >> GO TO 4.
NG >> GO TO 2.

2. CHECK STOP LAMP SWITCH POWER SUPPLY CIRCUIT

1. Disconnect stop lamp switch harness connector.

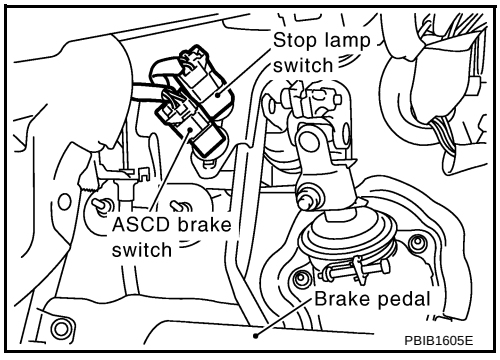

2. Check voltage between stop lamp switch terminal 1 and ground with CONSULT-II or tester.

Voltage: Battery voltage

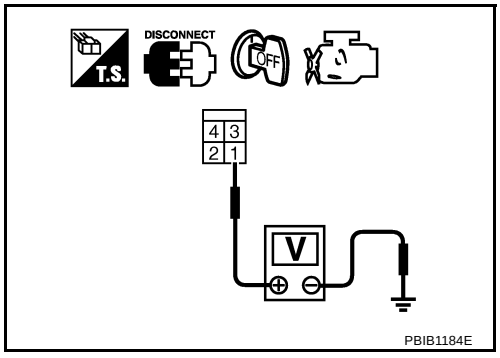

OK or NG

OK >> GO TO 4.
NG >> GO TO 3.

3. DETECT MALFUNCTIONING PART

Check the following.

- 10A fuse
- Fuse block (J/B) connector E201
- Harness for open and short between stop lamp switch and battery

>> Repair open circuit or short to ground or short to power in harness or connectors.

4. CHECK STOP LAMP SWITCH INPUT SIGNAL CIRCUIT FOR OPEN AND SHORT

1. Turn ignition switch OFF.
2. Disconnect ECM harness connector.
3. Disconnect stop lamp switch harness connector.
4. Check harness continuity between ECM terminal 101 and stop lamp switch terminal 2.
   Refer to Wiring Diagram.

   Continuity should exist.

5. Also check harness for short to ground and short to power.

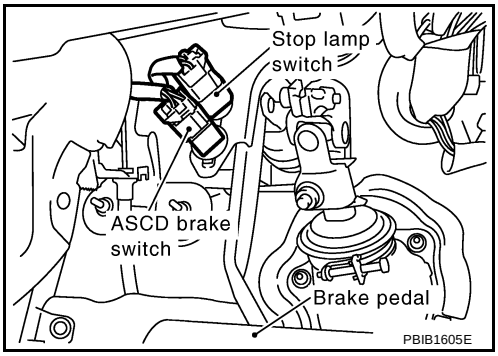

OK or NG

OK >> GO TO 6.
NG >> GO TO 5.

5. DETECT MALFUNCTIONING PART

Check the following.

- Harness connectors E211, M41
- Harness for open or short between ECM and stop lamp switch

>> Repair open circuit or short to ground or short to power in harness or connectors.

6. CHECK STOP LAMP SWITCH

Refer to EC-618, "Component Inspection" .

OK or NG

OK >> GO TO 7.
NG >> Replace stop lamp switch.

7. CHECK INTERMITTENT INCIDENT

Refer to EC-163, "TROUBLE DIAGNOSIS FOR INTERMITTENT INCIDENT" .

>> **INSPECTION END**

Component Inspection

ABS006X7

STOP LAMP SWITCH

1. Disconnect stop lamp switch harness connector.

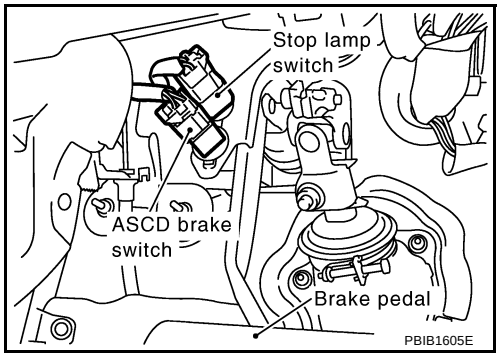

2. Check continuity between stop lamp switch terminals 1 and 2 under the following conditions.

Conditions	Continuity
Brake pedal: Fully released	Should not exist.
Brake pedal: Slightly depressed	Should exist.

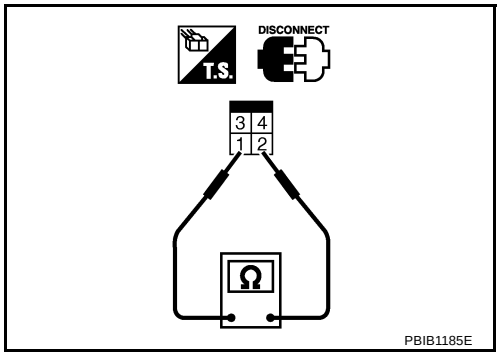

3. If NG, adjust stop lamp switch installation, refer to BR-6, "BRAKE PEDAL" , and perform step 2 again.

DTC P2122, P2123 APP SENSOR

PFP:18002

Component Description

ABS006X8

The accelerator pedal position sensor is installed on the upper end of the accelerator pedal assembly. The sensor detects the accelerator position and sends a signal to the ECM.
Accelerator pedal position sensor has two sensors. These sensors are a kind of potentiometers which transform the accelerator pedal position into output voltage, and emit the voltage signal to the ECM. In addition, these sensors detect the opening and closing speed of the accelerator pedal and feed the voltage signals to the ECM. The ECM judges the current opening angle of the accelerator pedal from these signals and controls the throttle control motor based on these signals.

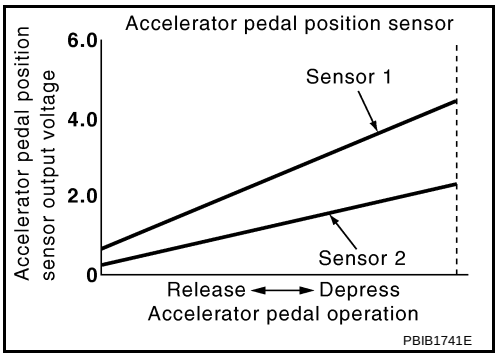

Idle position of the accelerator pedal is determined by the ECM receiving the signal from the accelerator pedal position sensor. The ECM uses this signal for the engine operation such as fuel cut.

CONSULT-II Reference Value in Data Monitor Mode

ABS006X9

Specification data are reference values.

MONITOR ITEM	CONDITION		SPECIFICATION
ACCEL SEN1	● Ignition switch: ON (Engine stopped)	Accelerator pedal: Fully released	0.5 - 1.0V
		Accelerator pedal: Fully depressed	4.0 - 4.8V
ACCEL SEN2*	● Ignition switch: ON (Engine stopped)	Accelerator pedal: Fully released	0.3 - 1.2V
		Accelerator pedal: Fully depressed	3.9 - 4.8V
CLSD THL POS	● Ignition switch: ON (Engine stopped)	Accelerator pedal: Fully released	ON
		Accelerator pedal: Slightly depressed	OFF

*: Accelerator pedal position sensor 2 signal is converted by ECM internally. Thus, it differs from ECM terminal voltage.

On Board Diagnosis Logic

ABS006XA

These self-diagnoses have the one trip detection logic.

NOTE:
If DTC P2122 or P2123 is displayed with DTC P1229, first perform the trouble diagnosis for DTC P1229. Refer to EC-483, "DTC P1229 SENSOR POWER SUPPLY" .

DTC No.	Trouble diagnosis name	DTC detecting condition	Possible cause
P2122 2122	Accelerator pedal position sensor 1 circuit low input	An excessively low voltage from the APP sensor 1 is sent to ECM.	● Harness or connectors (The APP sensor 1 circuit is open or shorted.) ● Accelerator pedal position sensor (Accelerator pedal position sensor 1)
P2123 2123	Accelerator pedal position sensor 1 circuit high input	An excessively high voltage from the APP sensor 1 is sent to ECM.	

FAIL-SAFE MODE

When the malfunction is detected, ECM enters fail-safe mode and the MIL lights up.

Engine operating condition in fail-safe mode
The ECM controls the electric throttle control actuator in regulating the throttle opening in order for the idle position to be within +10 degrees. The ECM regulates the opening speed of the throttle valve to be slower than the normal condition. So, the acceleration will be poor.

DTC Confirmation Procedure

ABS006XB

NOTE:
If DTC Confirmation Procedure has been previously conducted, always turn ignition switch OFF and wait at least 10 seconds before conducting the next test.
TESTING CONDITION:
Before performing the following procedure, confirm that battery voltage is more than 10V at idle.

WITH CONSULT-II

1. Turn ignition switch ON.
2. Select “DATA MONITOR” mode with CONSULT-II.
3. Start engine and let it idle for 1 second.
4. If DTC is detected, go to EC-622, "Diagnostic Procedure" .

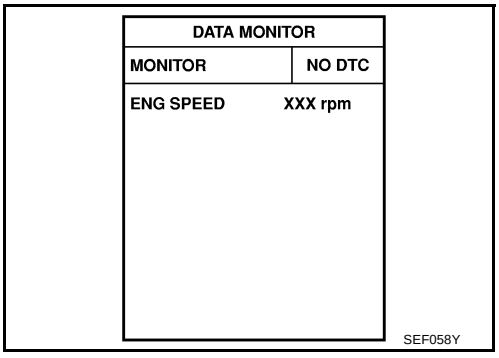

WITH GST

Follow the procedure “WITH CONSULT-II” above.

Wiring Diagram

ABS006XC

EC-APPS1-01

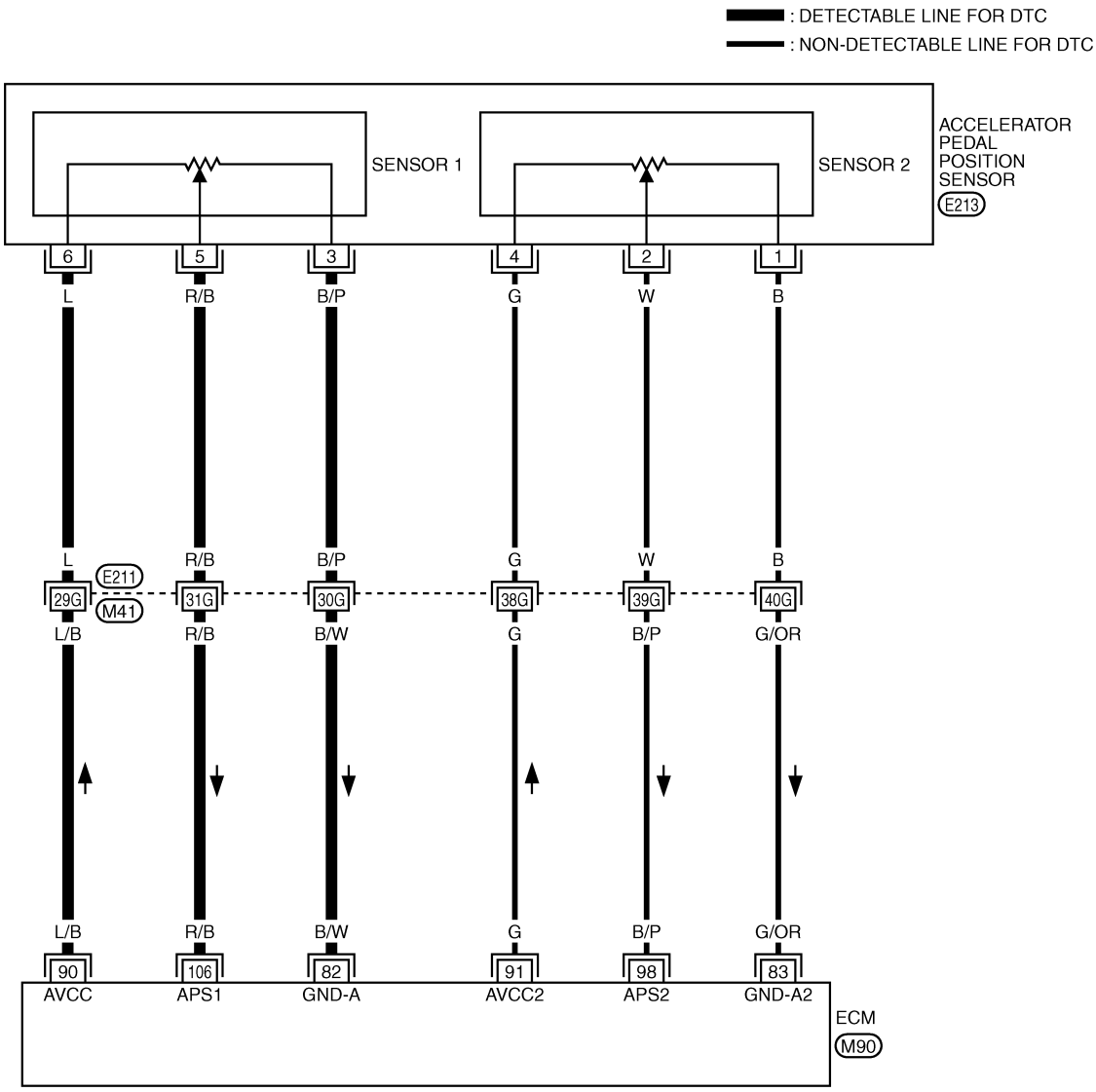

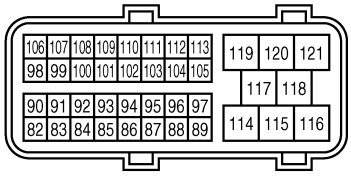

M90
B

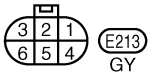

E213
GY

REFER TO THE FOLLOWING.
E211 -SUPER MULTIPLE JUNCTION (SMJ)

TBWM0239E

Specification data are reference values and are measured between each terminal and ground.

CAUTION:

Do not use ECM ground terminals when measuring input/output voltage. Doing so may result in damage to the ECM's transistor. Use a ground other than ECM terminals, such as the ground.

TERMINAL NO.	WIRE COLOR	ITEM	CONDITION	DATA (DC Voltage)
82	B/W	Sensor ground (APP sensor 1)	**[Engine is running]** ● **Warm-up condition** ● Idle speed	Approximately 0V
83	G/OR	Sensor ground (APP sensor 2)	**[Engine is running]** ● **Warm-up condition** ● Idle speed	Approximately 0V
90	L/B	Sensor power supply (APP sensor 1)	**[Ignition switch: ON]**	Approximately 5V
91	G	Sensor power supply (APP sensor 2)	**[Ignition switch: ON]**	Approximately 5V
98	B/P	Accelerator pedal position sensor 2	**[Ignition switch: ON]** ● Engine stopped ● Accelerator pedal: Fully released	0.15 - 0.60V
			[Ignition switch: ON] ● Engine stopped ● Accelerator pedal: Fully depressed	1.95 - 2.40V
106	R/B	Accelerator pedal position sensor 1	**[Ignition switch: ON]** ● Engine stopped ● Accelerator pedal: Fully released	0.5 - 1.0V
			[Ignition switch: ON] ● Engine stopped ● Accelerator pedal: Fully depressed	3.9 - 4.7V

Diagnostic Procedure

ABS006XD

1. CHECK GROUND CONNECTIONS

1. Turn ignition switch OFF.
2. Loosen and retighten ground three screws on the body. Refer to EC-170, "Ground Inspection" .

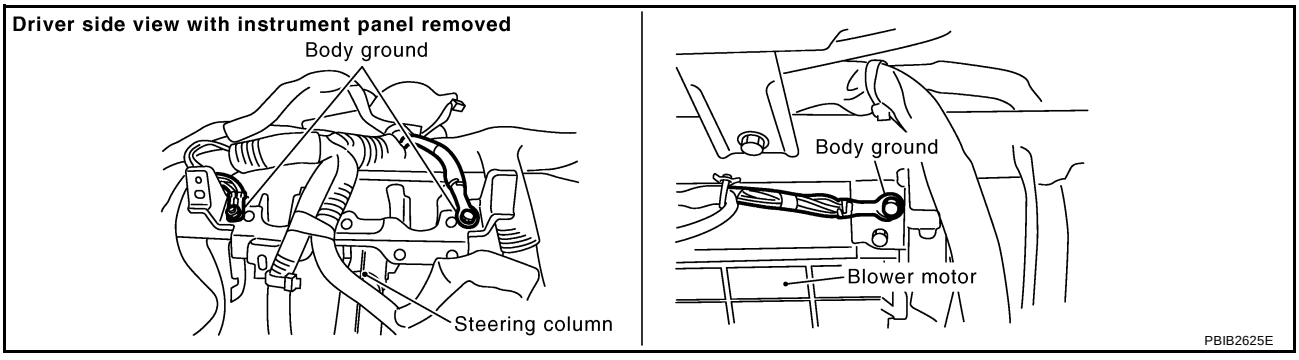

OK or NG

OK >> GO TO 2.
NG >> Repair or replace ground connections.

2. CHECK APP SENSOR 1 POWER SUPPLY CIRCUIT

1. Disconnect accelerator pedal position (APP) sensor harness connector.
2. Turn ignition switch ON.

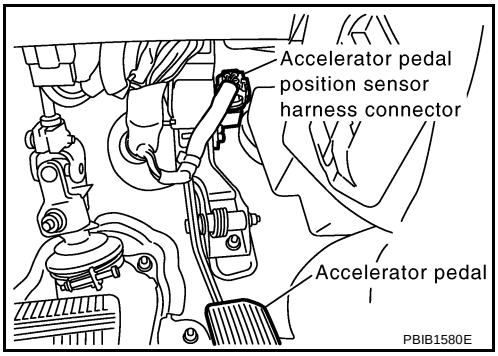

3. Check voltage between APP sensor terminal 6 and ground with CONSULT-II or tester.

Voltage: Approximately 5V

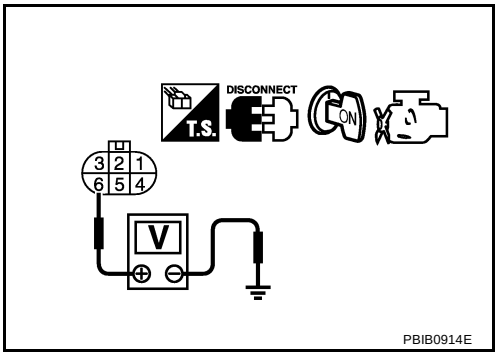

OK or NG

OK >> GO TO 4.
NG >> GO TO 3.

3. DETECT MALFUNCTIONING PART

Check the following.

- Harness connectors E211, M41
- Harness for open or short between ECM and accelerator pedal position sensor

>> Repair open circuit or short to ground or short to power in harness or connectors.

4. CHECK APP SENSOR 1 GROUND CIRCUIT FOR OPEN AND SHORT

1. Turn ignition switch OFF.
2. Disconnect ECM harness connector.
3. Check harness continuity between APP sensor terminal 3 and ECM terminal 82. Refer to Wiring Diagram.

Continuity should exist.

4. Also check harness for short to ground and short to power.

OK or NG

OK >> GO TO 6.
NG >> GO TO 5.

5. DETECT MALFUNCTIONING PART

Check the following.

- Harness connectors E211, M41
- Harness for open or short between ECM and accelerator pedal position sensor

>> Repair open circuit or short to ground or short to power in harness or connectors.

6. CHECK APP SENSOR INPUT SIGNAL CIRCUIT FOR OPEN AND SHORT

1. Check harness continuity between ECM terminal 106 and APP sensor terminal 5.
   Refer to Wiring Diagram.

   Continuity should exist.

2. Also check harness for short to ground and short to power.

OK or NG

OK >> GO TO 8.
NG >> GO TO 7.

7. DETECT MALFUNCTIONING PART

Check the following.

- Harness connectors E211, M41
- Harness for open or short between ECM and accelerator pedal position sensor

>> Repair open circuit or short to ground or short to power in harness or connectors.

8. CHECK APP SENSOR

Refer to EC-624, "Component Inspection" .

OK or NG

OK >> GO TO 10.
NG >> GO TO 9.

9. REPLACE ACCELERATOR PEDAL ASSEMBLY

1. Replace accelerator pedal assembly.
2. Perform EC-96, "Accelerator Pedal Released Position Learning" .
3. Perform EC-96, "Throttle Valve Closed Position Learning" .
4. Perform EC-97, "Idle Air Volume Learning" .

>> **INSPECTION END**

10. CHECK INTERMITTENT INCIDENT

Refer to EC-163, "TROUBLE DIAGNOSIS FOR INTERMITTENT INCIDENT" .

>> **INSPECTION END**

Component Inspection

ABS006XE

ACCELERATOR PEDAL POSITION SENSOR

1. Reconnect all harness connectors disconnected.
2. Turn ignition switch ON.
3. Check voltage between ECM terminals 106 (APP sensor 1 signal), 98 (APP sensor 2 signal) and ground under the following conditions.

Terminal	Accelerator pedal	Voltage
106 (Accelerator pedal position sensor 1)	Fully released	0.5 - 1.0V
	Fully depressed	3.9 - 4.7V
98 (Accelerator pedal position sensor 2)	Fully released	0.15 - 0.60V
	Fully depressed	1.95 - 2.40V

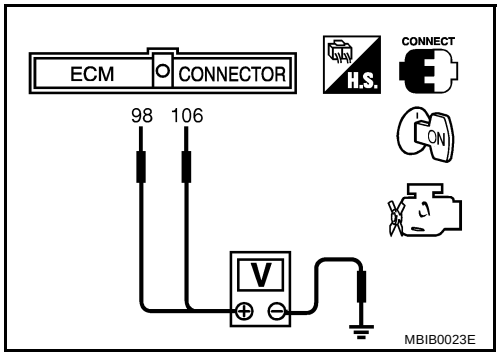

4. If NG, replace accelerator pedal assembly and go to next step.
5. Perform EC-96, "Accelerator Pedal Released Position Learning" .
6. Perform EC-96, "Throttle Valve Closed Position Learning" .
7. Perform EC-97, "Idle Air Volume Learning" .

Removal and Installation

ABS006XF

ACCELERATOR PEDAL

Refer to ACC-3, "ACCELERATOR CONTROL SYSTEM" .

DTC P2127, P2128 APP SENSOR

PFP:18002

Component Description

ABS006XG

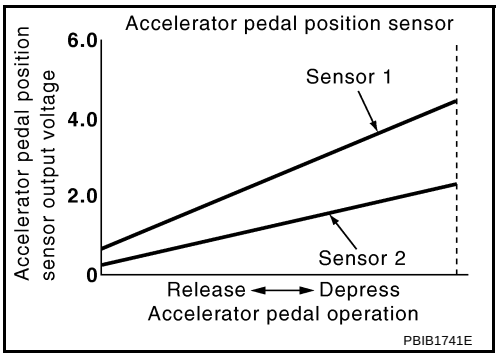

The accelerator pedal position sensor is installed on the upper end of the accelerator pedal assembly. The sensor detects the accelerator position and sends a signal to the ECM.
Accelerator pedal position sensor has two sensors. These sensors are a kind of potentiometers which transform the accelerator pedal position into output voltage, and emit the voltage signal to the ECM. In addition, these sensors detect the opening and closing speed of the accelerator pedal and feed the voltage signals to the ECM. The ECM judges the current opening angle of the accelerator pedal from these signals and controls the throttle control motor based on these signals.
Idle position of the accelerator pedal is determined by the ECM receiving the signal from the accelerator pedal position sensor. The ECM uses this signal for the engine operation such as fuel cut.

CONSULT-II Reference Value in Data Monitor Mode

ABS006XH

Specification data are reference values.

MONITOR ITEM	CONDITION		SPECIFICATION
ACCEL SEN1	● Ignition switch: ON (Engine stopped)	Accelerator pedal: Fully released	0.5 - 1.0V
		Accelerator pedal: Fully depressed	4.0 - 4.8V
ACCEL SEN2*	● Ignition switch: ON (Engine stopped)	Accelerator pedal: Fully released	0.3 - 1.2V
		Accelerator pedal: Fully depressed	3.9 - 4.8V
CLSD THL POS	● Ignition switch: ON (Engine stopped)	Accelerator pedal: Fully released	ON
		Accelerator pedal: Slightly depressed	OFF

*: Accelerator pedal position sensor 2 signal is converted by ECM internally. Thus, it differs from ECM terminal voltage.

On Board Diagnosis Logic

ABS006XI

These self-diagnoses have the one trip detection logic.

DTC No.	Trouble diagnosis name	DTC detecting condition	Possible cause
P2127 2127	Accelerator pedal position sensor 2 circuit low input	An excessively low voltage from the APP sensor 2 is sent to ECM.	● Harness or connectors (The APP sensor 2 circuit is open or shorted.) (TP sensor circuit shorted.) ● Accelerator pedal position sensor (Accelerator pedal position sensor 2) ● Electric throttle control actuator (TP sensor 1 and 2)
P2128 2128	Accelerator pedal position sensor 2 circuit high input	An excessively high voltage from the APP sensor 2 is sent to ECM.	

FAIL-SAFE MODE

When the malfunction is detected, ECM enters fail-safe mode and the MIL lights up.

Engine operating condition in fail-safe mode
The ECM controls the electric throttle control actuator in regulating the throttle opening in order for the idle position to be within +10 degrees. The ECM regulates the opening speed of the throttle valve to be slower than the normal condition. So, the acceleration will be poor.

DTC Confirmation Procedure

ABS006XJ

NOTE:
If DTC Confirmation Procedure has been previously conducted, always turn ignition switch OFF and wait at least 10 seconds before conducting the next test.
TESTING CONDITION:
Before performing the following procedure, confirm that battery voltage is more than 10V at idle.

WITH CONSULT-II

1. Turn ignition switch ON.
2. Select “DATA MONITOR” mode with CONSULT-II.
3. Start engine and let it idle for 1 second.
4. If DTC is detected, go to EC-629, "Diagnostic Procedure" .

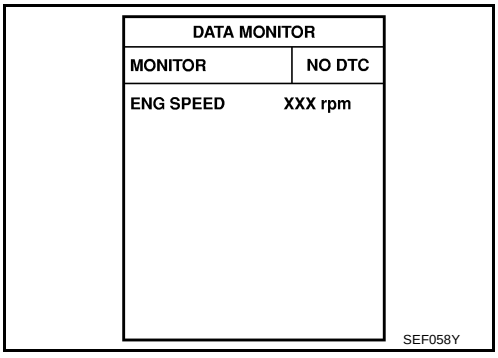

WITH GST

Follow the procedure “WITH CONSULT-II” above.

Wiring Diagram

ABS006XK

EC-APPS2-01

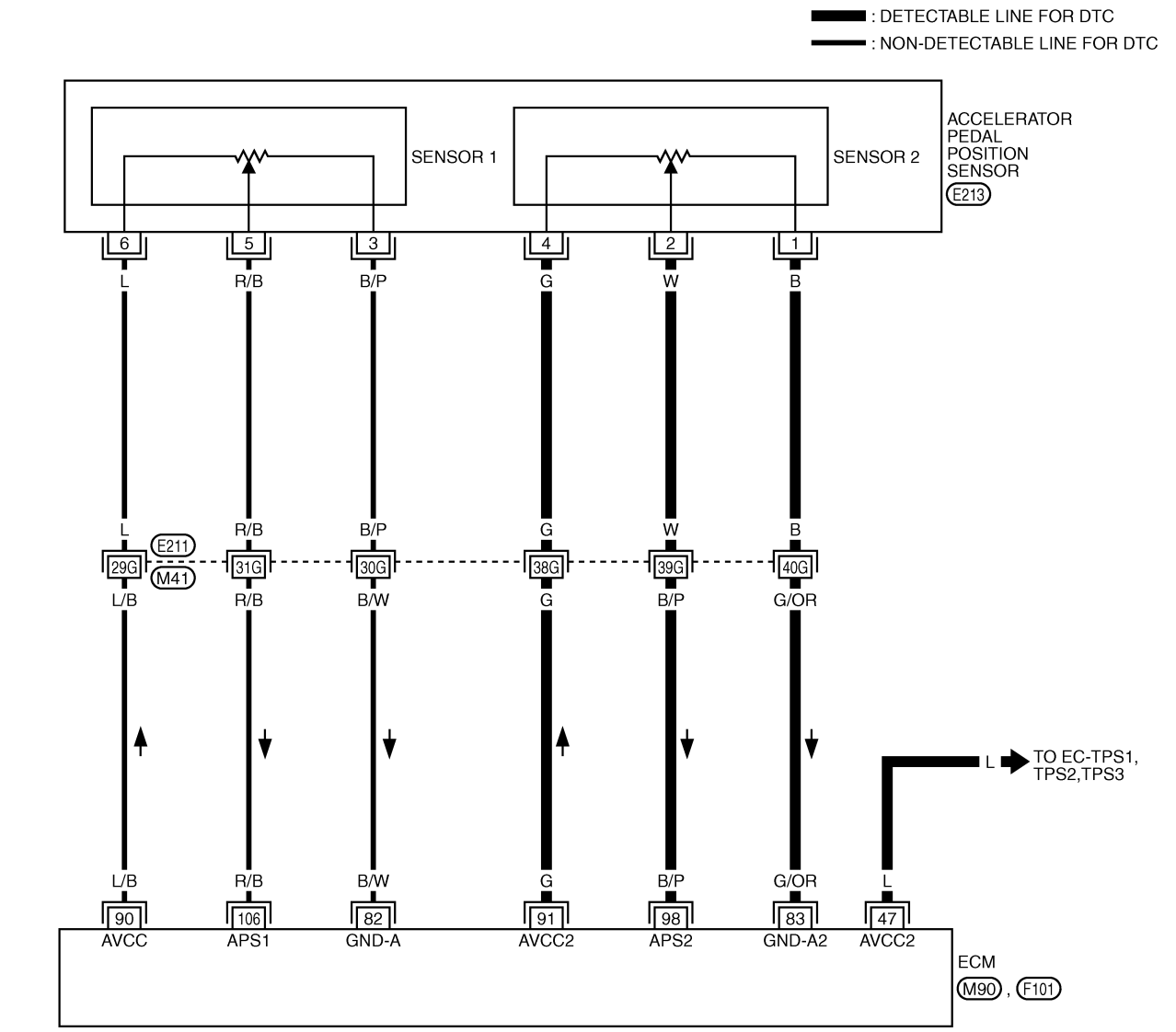

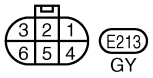

REFER TO THE FOLLOWING.
E211 -SUPER MULTIPLE JUNCTION (SMJ)

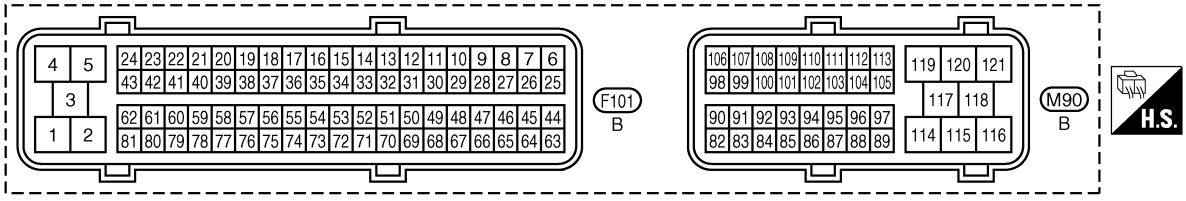

TBWM0506E

Specification data are reference values and are measured between each terminal and ground.

CAUTION:
Do not use ECM ground terminals when measuring input/output voltage. Doing so may result in damage to the ECM's transistor. Use a ground other than ECM terminals, such as the ground.

TERMINAL NO.	WIRE COLOR	ITEM	CONDITION	DATA (DC Voltage)
47	L	Sensor power supply (Throttle position sensor)	**[Ignition switch: ON]**	Approximately 5V
82	B/W	Sensor ground (APP sensor 1)	**[Engine is running]** ● **Warm-up condition** ● Idle speed	Approximately 0V
83	G/OR	Sensor ground (APP sensor 2)	**[Engine is running]** ● **Warm-up condition** ● Idle speed	Approximately 0V
90	L/B	Sensor power supply (APP sensor 1)	**[Ignition switch: ON]**	Approximately 5V
91	G	Sensor power supply (APP sensor 2)	**[Ignition switch: ON]**	Approximately 5V
98	B/P	Accelerator pedal position sensor 2	**[Ignition switch: ON]** ● Engine stopped ● Accelerator pedal: Fully released	0.15 - 0.60V
			[Ignition switch: ON] ● Engine stopped ● Accelerator pedal: Fully depressed	1.95 - 2.40V
106	R/B	Accelerator pedal position sensor 1	**[Ignition switch: ON]** ● Engine stopped ● Accelerator pedal: Fully released	0.5 - 1.0V
			[Ignition switch: ON] ● Engine stopped ● Accelerator pedal: Fully depressed	3.9 - 4.7V

Diagnostic Procedure

ABS006XL

1. CHECK GROUND CONNECTIONS

1. Turn ignition switch OFF.
2. Loosen and retighten ground three screws on the body, Refer to EC-170, "Ground Inspection" .

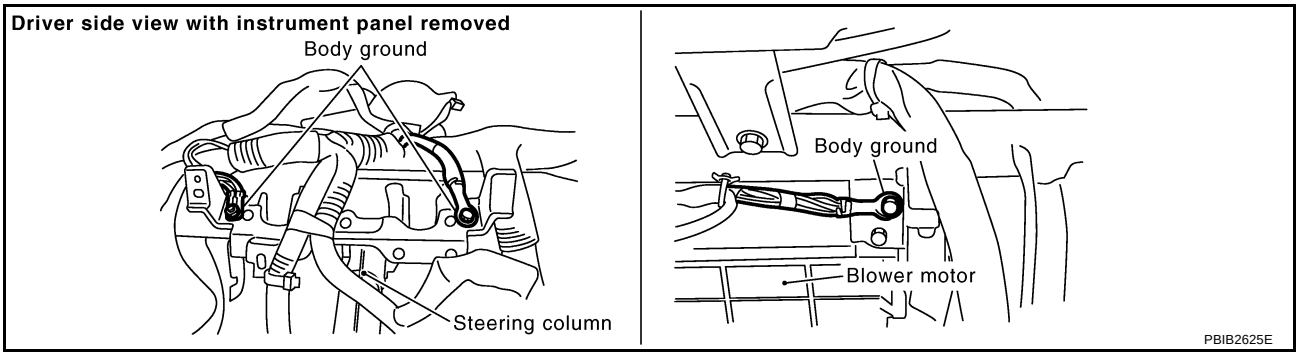

OK or NG

OK >> GO TO 2.
NG >> Repair or replace ground connections.

2. CHECK APP SENSOR 2 POWER SUPPLY CIRCUIT-I

1. Disconnect accelerator pedal position (APP) sensor harness connector.
2. Turn ignition switch ON.

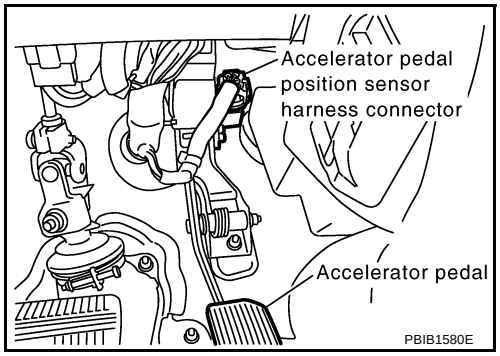

3. Check voltage between APP sensor terminal 4 and ground with CONSULT-II or tester.

Voltage: Approximately 5V

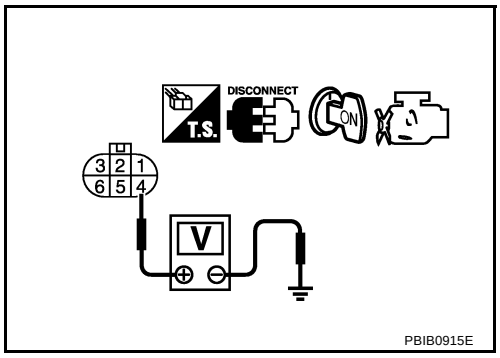

OK or NG

OK >> GO TO 8.
NG >> GO TO 3.

3. CHECK APP SENSOR 2 POWER SUPPLY CIRCUIT-II

1. Turn ignition switch OFF.
2. Disconnect ECM harness connector.
3. Check harness continuity between APP sensor terminal 4 and ECM terminal 91. Refer to wiring diagram.

Continuity should exist.

OK or NG

OK >> GO TO 5.
NG >> GO TO 4.

4. DETECT MALFUNCTIONING PART

Check the following.

- Harness connectors E211, M41
- Harness for open or short between ECM and accelerator pedal position sensor

>> Repair open circuit or short to ground or short to power in harness or connectors.

5. CHECK THROTTLE POSITION SENSOR 2 POWER SUPPLY CIRCUIT-III

Check the following.

- Harness for short to power and short to ground, between the following terminals.

ECM terminal	Sensor terminal	Reference Wiring Diagram
91	APP sensor terminal 4	EC-628
47	Electric throttle control actuator terminal 1	EC-280

OK or NG

OK >> GO TO 6.
NG >> Repair short to ground or short to power in harness or connectors.

6. CHECK THROTTLE POSITION SENSOR

Refer to EC-284, "Component Inspection" .

OK or NG

OK >> GO TO 14.
NG >> GO TO 7.

7. REPLACE ELECTRIC THROTTLE CONTROL ACTUATOR

1. Replace electric throttle control actuator.
2. Perform EC-96, "Throttle Valve Closed Position Learning" .
3. Perform EC-97, "Idle Air Volume Learning" .

>> **INSPECTION END**

8. CHECK APP SENSOR 2 GROUND CIRCUIT FOR OPEN AND SHORT

1. Turn ignition switch OFF.
2. Disconnect ECM harness connector.
3. Check harness continuity between APP sensor terminal 1 and ECM terminal 83.
   Refer to Wiring Diagram.

   Continuity should exist.

4. Also check harness for short to ground and short to power.

OK or NG

OK >> GO TO 10.
NG >> GO TO 9.

9. DETECT MALFUNCTIONING PART

Check the following.

- Harness connectors E211, M41
- Harness for open or short between ECM and accelerator pedal position sensor

>> Repair open circuit or short to ground or short to power in harness or connectors.

10. CHECK APP SENSOR 2 INPUT SIGNAL CIRCUIT FOR OPEN AND SHORT

1. Check harness continuity between ECM terminal 98 and APP sensor terminal 2.
   Refer to Wiring Diagram.

   Continuity should exist.

2. Also check harness for short to ground and short to power.

OK or NG

OK >> GO TO 12.
NG >> GO TO 11.

11. DETECT MALFUNCTIONING PART

Check the following.

- Harness connectors E211, M41
- Harness for open or short between ECM and accelerator pedal position sensor

>> Repair open circuit or short to ground or short to power in harness or connectors.

12. CHECK APP SENSOR

Refer to EC-632, "Component Inspection" .

OK or NG

OK >> GO TO 14.
NG >> GO TO 13.

13. REPLACE ACCELERATOR PEDAL ASSEMBLY

1. Replace accelerator pedal assembly.
2. Perform EC-96, "Accelerator Pedal Released Position Learning" .
3. Perform EC-96, "Throttle Valve Closed Position Learning" .
4. Perform EC-97, "Idle Air Volume Learning" .

>> **INSPECTION END**

14. CHECK INTERMITTENT INCIDENT

Refer to EC-163, "TROUBLE DIAGNOSIS FOR INTERMITTENT INCIDENT" .

>> **INSPECTION END**

Component Inspection

ABS006XM

ACCELERATOR PEDAL POSITION SENSOR

1. Reconnect all harness connectors disconnected.
2. Turn ignition switch ON.
3. Check voltage between ECM terminals 106 (APP sensor 1 signal), 98 (APP sensor 2 signal) and ground under the following conditions.

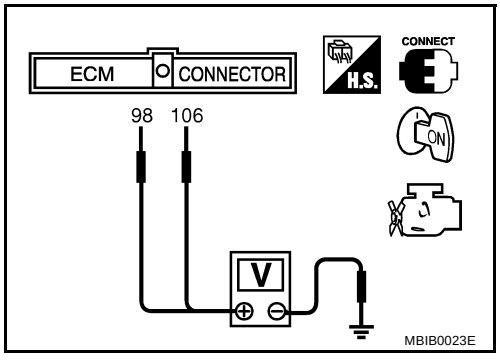

Terminal	Accelerator pedal	Voltage
106 (Accelerator pedal position sensor 1)	Fully released	0.5 - 1.0V
	Fully depressed	3.9 - 4.7V
98 (Accelerator pedal position sensor 2)	Fully released	0.15 - 0.60V
	Fully depressed	1.95 - 2.40V

4. If NG, replace accelerator pedal assembly and go to next step.
5. Perform EC-96, "Accelerator Pedal Released Position Learning" .
6. Perform EC-96, "Throttle Valve Closed Position Learning" .
7. Perform EC-97, "Idle Air Volume Learning" .

Removal and Installation

ABS006XN

ACCELERATOR PEDAL

Refer to ACC-3, "ACCELERATOR CONTROL SYSTEM" .

DTC P2135 TP SENSOR

PFP:16119

Component Description

ABS006XO

Electric throttle control actuator consists of throttle control motor, throttle position sensor, etc. The throttle position sensor responds to the throttle valve movement.
The throttle position sensor has two sensors. These sensors are a kind of potentiometers which transform the throttle valve position into output voltage, and emit the voltage signal to the ECM. In addition, these sensors detect the opening and closing speed of the throttle valve and feed the voltage signals to the ECM. The ECM judges the current opening angle of the throttle valve from these signals and the ECM controls the throttle control motor to make the throttle valve opening angle properly in response to driving condition.

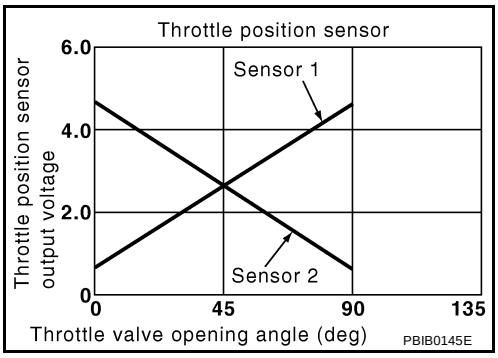

CONSULT-II Reference Value in Data Monitor Mode

ABS006XP

Specification data are reference values.

MONITOR ITEM	CONDITION		SPECIFICATION
THRTL SEN1 THRTL SEN2*	● Ignition switch: ON (Engine stopped) ● Selector lever: D	Accelerator pedal: Fully released	More than 0.36V
		Accelerator pedal: Fully depressed	Less than 4.75V

*: Throttle position sensor 2 signal is converted by ECM internally. Thus, it differs from ECM terminal voltage signal.

On Board Diagnosis Logic

ABS006XQ

This self-diagnosis has the one trip detection logic.

DTC No.	Trouble diagnosis name	DTC detecting condition	Possible cause
P2135 2135	Throttle position sensor circuit range/performance problem	Rationally incorrect voltage is sent to ECM compared with the signals from TP sensor 1 and TP sensor 2.	● Harness or connector (The TP sensor 1 and 2 circuit is open or shorted.) (APP sensor 2 circuit is shorted). ● Electric throttle control actuator (TP sensor 1 and 2) ● Accelerator pedal position sensor. (APP sensor 2)

FAIL-SAFE MODE

When the malfunction is detected, the ECM enters fail-safe mode and the MIL lights up.

Engine operation condition in fail-safe mode
The ECM controls the electric throttle control actuator in regulating the throttle opening in order for the idle position to be within +10 degrees. The ECM regulates the opening speed of the throttle valve to be slower than the normal condition. So, the acceleration will be poor.

DTC Confirmation Procedure

ABS006XR

NOTE:
If DTC Confirmation Procedure has been previously conducted, always turn ignition switch OFF and wait at least 10 seconds before conducting the next test.
TESTING CONDITION:
Before performing the following procedure, confirm that battery voltage is more than 10V at idle.

WITH CONSULT-II

1. Turn ignition switch ON.
2. Select “DATA MONITOR” mode with CONSULT-II.
3. Start engine and let it idle for 1 second.
4. If DTC is detected, go to EC-636, "Diagnostic Procedure" .

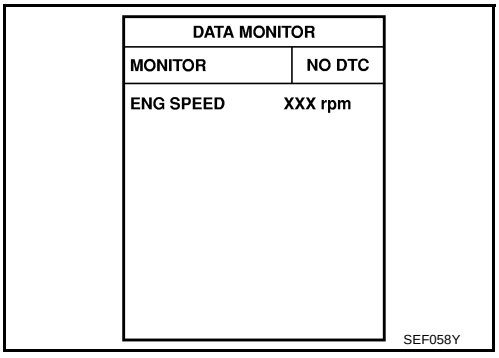

WITH GST

Follow the procedure “WITH CONSULT-II” above.

Wiring Diagram

ABS006XS

EC-TPS3-01

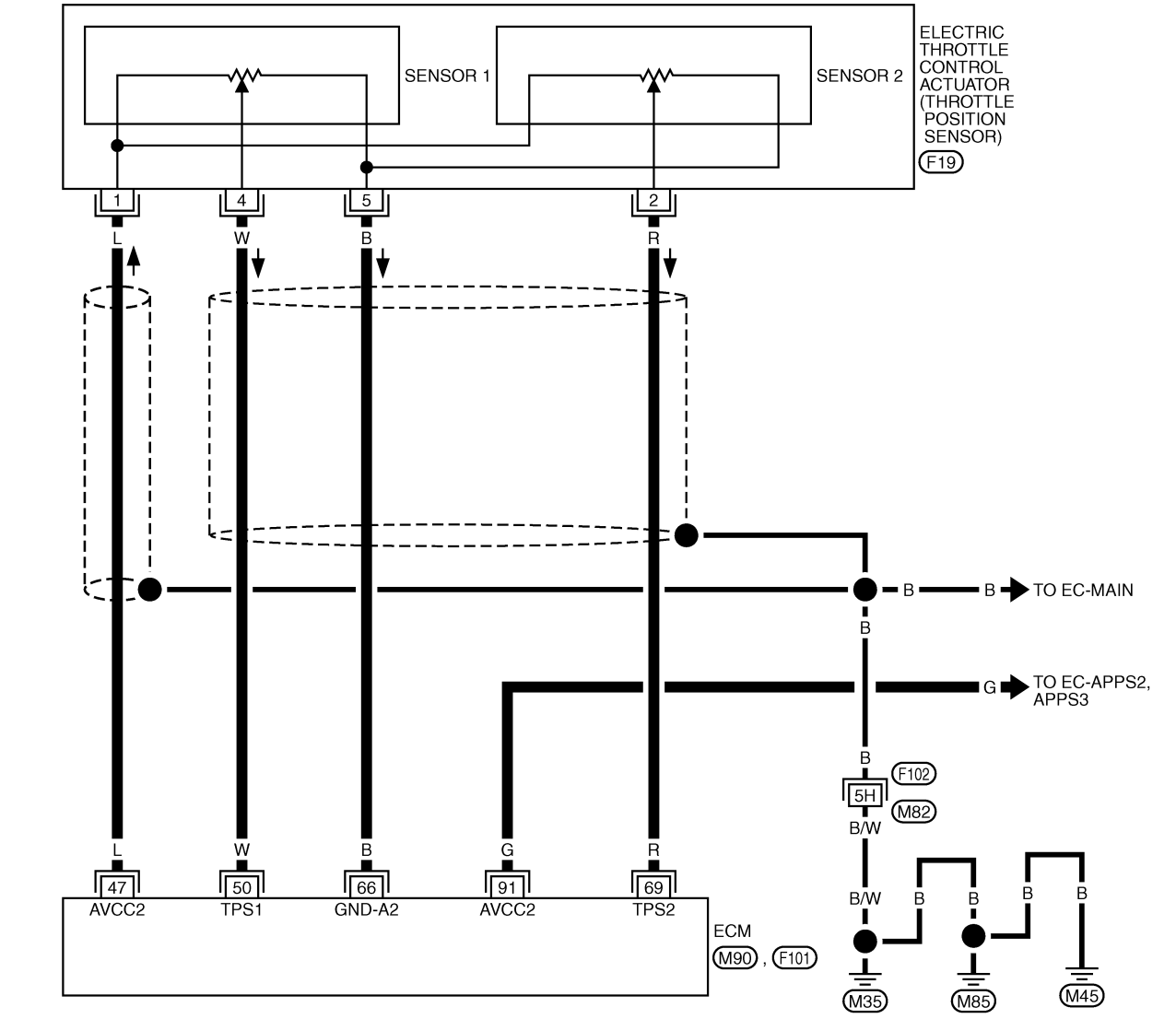

F19
DGY

REFER TO THE FOLLOWING.
F102 -SUPER MULTIPLE JUNCTION (SMJ)

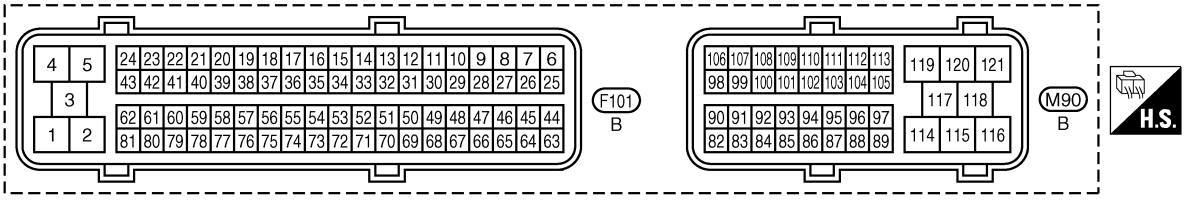

TBWM0406E

Specification data are reference values and are measured between each terminal and ground.

CAUTION:

Do not use ECM ground terminals when measuring input/output voltage. Doing so may result in damage to the ECM's transistor. Use a ground other than ECM terminals, such as the ground.

TERMINAL NO.	WIRE COLOR	ITEM	CONDITION	DATA (DC Voltage)
47	L	Sensor power supply (Throttle position sensor)	**[Ignition switch: ON]**	Approximately 5V
50	W	Throttle position sensor 1	**[Ignition switch: ON]** ● Engine stopped ● Selector lever: D ● Accelerator pedal: Fully released	More than 0.36V
			[Ignition switch: ON] ● Engine stopped ● Selector lever: D ● Accelerator pedal: Fully depressed	Less than 4.75V
66	B	Sensor ground (Throttle position sensor)	**[Engine is running]** ● **Warm-up condition** ● Idle speed	Approximately 0V
69	R	Throttle position sensor 2	**[Ignition switch: ON]** ● Engine stopped ● Selector lever: D ● Accelerator pedal: Fully released	Less than 4.75V
			[Ignition switch: ON] ● Engine stopped ● Selector lever: D ● Accelerator pedal: Fully depressed	More than 0.36V
91	G	Sensor power supply (APP sensor 2)	**[Ignition switch: ON]**	Approximately 5V

Diagnostic Procedure

ABS006XT

1. CHECK GROUND CONNECTIONS

1. Turn ignition switch OFF.
2. Loosen and retighten ground three screws on the body.
   Refer to EC-170, "Ground Inspection" .

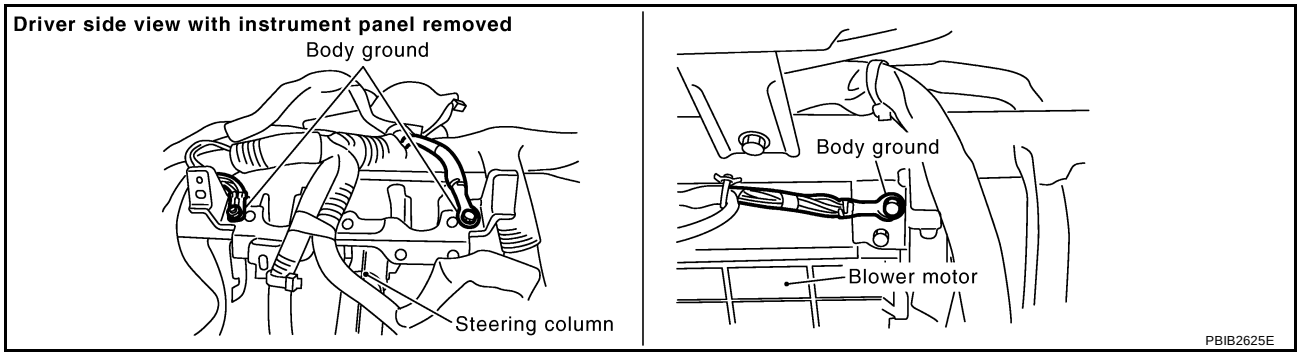

OK or NG

OK >> GO TO 2.
NG >> Repair or replace ground connections.

2. CHECK THROTTLE POSITION SENSOR POWER SUPPLY CIRCUIT-1

1. Disconnect electric throttle control actuator harness connector.
2. Turn ignition switch ON.

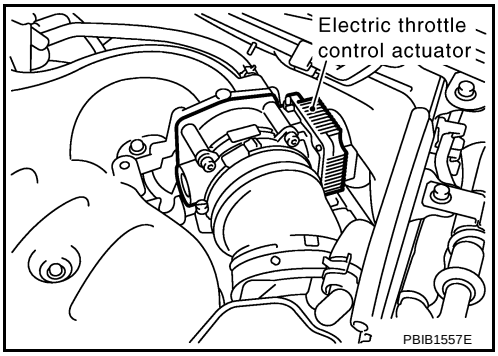

3. Check voltage between electric throttle control actuator terminal 1 and ground with CONSULT-II or tester.

Voltage: Approximately 5V

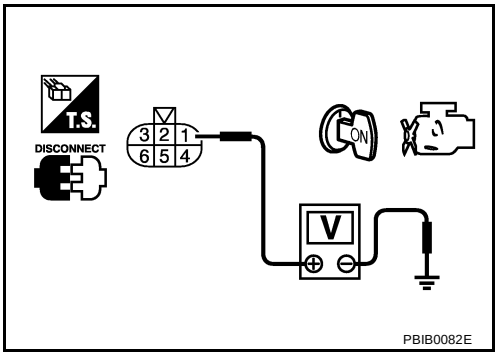

OK or NG

OK >> GO TO 7.
NG >> GO TO 3.

3. CHECK THROTTLE POSITION SENSOR POWER SUPPLY CIRCUIT-II

1. Turn ignition switch OFF.
2. Disconnect ECM harness connector.
3. Check harness continuity between electric throttle control actuator terminal 1 and ECM terminal 47. Refer to Wiring Diagram.

Continuity should exist.

OK or NG

OK >> GO TO 4.
NG >> Repair or replace open circuit.

4. CHECK THROTTLE POSITION SENSOR POWER SUPPLY CIRCUIT-III

Check the following.

- Harness for short to power and short to ground, between the following terminals.

ECM terminal	Sensor terminal	Reference Wiring Diagram
47	Electric throttle control actuator terminal 1	EC-635
91	APP sensor terminal 4	EC-628

OK or NG

OK >> GO TO 5.
NG >> Repair short to ground or short to power in harness or connectors.

5. CHECK APP SENSOR

Refer to EC-632, "Component Inspection" .

OK or NG

OK >> GO TO 11.
NG >> GO TO 6.

6. REPLACE ACCELERATOR PEDAL ASSEMBLY

1. Replace accelerator pedal assembly.
2. Perform EC-96, "Accelerator Pedal Released Position Learning" .
3. Perform EC-96, "Throttle Valve Closed Position Learning" .
4. Perform EC-97, "Idle Air Volume Learning" .

>> **INSPECTION END**

7. CHECK THROTTLE POSITION SENSOR GROUND CIRCUIT FOR OPEN AND SHORT

1. Turn ignition switch OFF.
2. Disconnect ECM harness connector.
3. Check harness continuity between electric throttle control actuator terminal 5 and ECM terminal 66.
   Refer to Wiring Diagram.

   Continuity should exist.

4. Also check harness for short to ground and short to power.

OK or NG

OK >> GO TO 8.
NG >> Repair open circuit or short to ground or short to power in harness or connectors.

8. CHECK THROTTLE POSITION SENSOR INPUT SIGNAL CIRCUIT FOR OPEN AND SHORT

1. Check harness continuity between ECM terminal 50 and electric throttle control actuator terminal 4, ECM terminal 69 and electric throttle control actuator terminal 2.
   Refer to Wiring Diagram.

   Continuity should exist.

2. Also check harness for short to ground and short to power.

OK or NG

OK >> GO TO 9.
NG >> Repair open circuit or short to ground or short to power in harness or connectors.

9. CHECK THROTTLE POSITION SENSOR

Refer to EC-639, "Component Inspection" .

OK or NG

OK >> GO TO 11.
NG >> GO TO 10.

10. REPLACE ELECTRIC THROTTLE CONTROL ACTUATOR

1. Replace the electric throttle control actuator.
2. Perform EC-96, "Throttle Valve Closed Position Learning" .
3. Perform EC-97, "Idle Air Volume Learning" .

>> **INSPECTION END**

11. CHECK INTERMITTENT INCIDENT

Refer to EC-163, "TROUBLE DIAGNOSIS FOR INTERMITTENT INCIDENT" .

>> **INSPECTION END**

Component Inspection

ABS006XU

THROTTLE POSITION SENSOR

1. Reconnect all harness connectors disconnected.
2. Perform EC-96, "Throttle Valve Closed Position Learning" .
3. Turn ignition switch ON.
4. Set selector lever to D.
5. Check voltage between ECM terminals 50 (TP sensor 1signal), 69 (TP sensor 2signal) and ground under the following conditions.

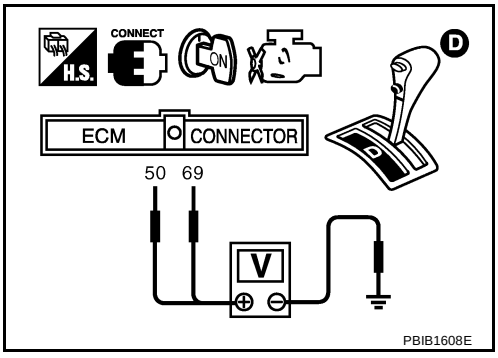

Terminal	Accelerator pedal	Voltage
50 (Throttle position sensor 1)	Fully released	More than 0.36V
	Fully depressed	Less than 4.75V
69 (Throttle position sensor 2)	Fully released	Less than 4.75V
	Fully depressed	More than 0.36V

6. If NG, replace electric throttle control actuator and go to the next step.
7. Perform EC-96, "Throttle Valve Closed Position Learning" .
8. Perform EC-97, "Idle Air Volume Learning" .

Removal and Installation

ABS006XV

ELECTRIC THROTTLE CONTROL ACTUATOR

Refer to EM-19, "INTAKE MANIFOLD COLLECTOR" .

DTC P2138 APP SENSOR

PFP:18002

Component Description

ABS006XW

The accelerator pedal position sensor is installed on the upper end of the accelerator pedal assembly. The sensor detects the accelerator position and sends a signal to the ECM.
Accelerator pedal position sensor has two sensors. These sensors are a kind of potentiometers which transform the accelerator pedal position into output voltage, and emit the voltage signal to the ECM. In addition, these sensors detect the opening and closing speed of the accelerator pedal and feed the voltage signals to the ECM. The ECM judges the current opening angle of the accelerator pedal from these signals and controls the throttle control motor based on these signals.

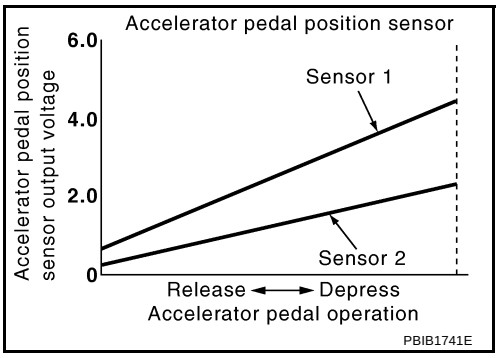

Idle position of the accelerator pedal is determined by the ECM receiving the signal from the accelerator pedal position sensor. The ECM uses this signal for the engine operation such as fuel cut.

CONSULT-II Reference Value in Data Monitor Mode

ABS006XX

Specification data are reference values.

MONITOR ITEM	CONDITION		SPECIFICATION
ACCEL SEN1	● Ignition switch: ON (Engine stopped)	Accelerator pedal: Fully released	0.5 - 1.0V
		Accelerator pedal: Fully depressed	4.0 - 4.8V
ACCEL SEN2*	● Ignition switch: ON (Engine stopped)	Accelerator pedal: Fully released	0.3 - 1.2V
		Accelerator pedal: Fully depressed	3.9 - 4.8V
CLSD THL POS	● Ignition switch: ON (Engine stopped)	Accelerator pedal: Fully released	ON
		Accelerator pedal: Slightly depressed	OFF

*: Accelerator pedal position sensor 2 signal is converted by ECM internally. Thus, it differs from ECM terminal voltage.

On Board Diagnosis Logic

ABS006XY

This self-diagnosis has the one trip detection logic.

NOTE:
If DTC P2138 is displayed with DTC P1229, first perform the trouble diagnosis for DTC P1229. Refer to EC-483, "DTC P1229 SENSOR POWER SUPPLY" .

DTC No.	Trouble diagnosis name	DTC detecting condition	Possible cause
P2138 2138	Accelerator pedal position sensor circuit range/performance problem	Rationally incorrect voltage is sent to ECM compared with the signals from APP sensor 1 and APP sensor 2.	● Harness or connector (The APP sensor 1 and 2 circuit is open or shorted.) (TP sensor circuit is shorted.) ● Accelerator pedal position sensor 1 and 2 ● Electric throttle control actuator (TP sensor 1 and 2)

FAIL-SAFE MODE

When the malfunction is detected, ECM enters fail-safe mode and the MIL lights up.

Engine operating condition in fail-safe mode
The ECM controls the electric throttle control actuator in regulating the throttle opening in order for the idle position to be within +10 degrees. The ECM regulates the opening speed of the throttle valve to be slower than the normal condition. So, the acceleration will be poor.

DTC Confirmation Procedure

ABS006XZ

NOTE:
If DTC Confirmation Procedure has been previously conducted, always turn ignition switch OFF and wait at least 10 seconds before conducting the next test.
TESTING CONDITION:
Before performing the following procedure, confirm that battery voltage is more than 10V at idle.

WITH CONSULT-II

1. Turn ignition switch ON.
2. Select “DATA MONITOR” mode with CONSULT-II.
3. Start engine and let it idle for 1 second.
4. If DTC is detected, go to EC-643, "Diagnostic Procedure" .

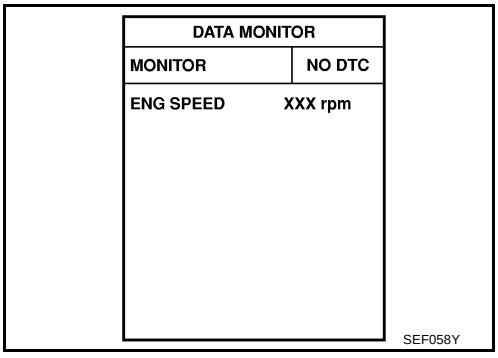

WITH GST

Follow the procedure “WITH CONSULT-II” above.

Wiring Diagram

ABS006Y0

EC-APPS3-01

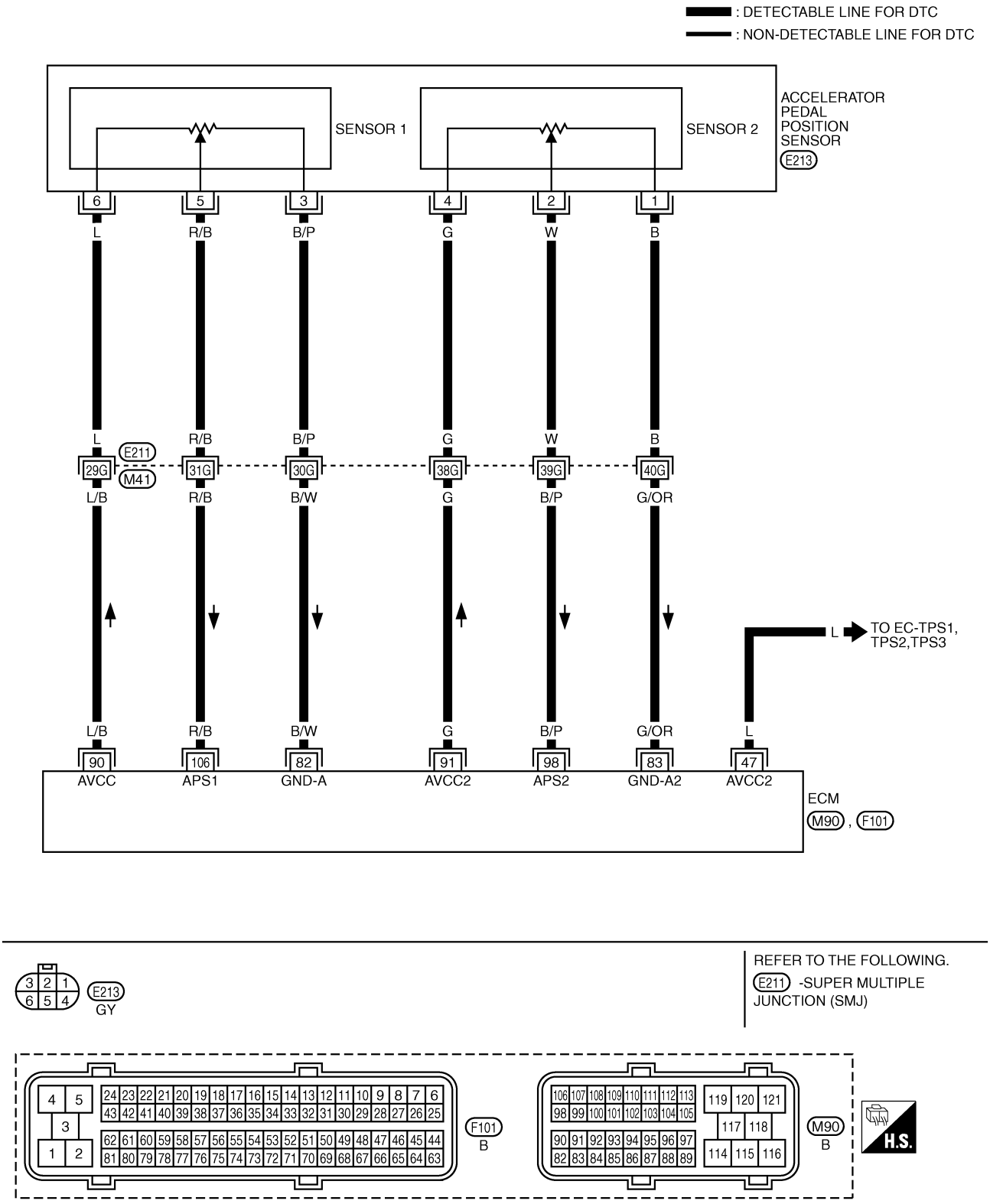

TBWM0507E

Specification data are reference values and are measured between each terminal and ground.

CAUTION:
Do not use ECM ground terminals when measuring input/output voltage. Doing so may result in damage to the ECM's transistor. Use a ground other than ECM terminals, such as the ground.

TERMINAL NO.	WIRE COLOR	ITEM	CONDITION	DATA (DC Voltage)
47	L	Sensor power supply (Throttle position sensor)	**[Ignition switch: ON]**	Approximately 5V
82	B/W	Sensor ground (APP sensor 1)	**[Engine is running]** ● **Warm-up condition** ● Idle speed	Approximately 0V
83	G/OR	Sensor ground (APP sensor 2)	**[Engine is running]** ● **Warm-up condition** ● Idle speed	Approximately 0V
90	L/B	Sensor power supply (APP sensor 1)	**[Ignition switch: ON]**	Approximately 5V
91	G	Sensor power supply (APP sensor 2)	**[Ignition switch: ON]**	Approximately 5V
98	B/P	Accelerator pedal position sensor 2	**[Ignition switch: ON]** ● Engine stopped ● Accelerator pedal: Fully released	0.15 - 0.60V
			[Ignition switch: ON] ● Engine stopped ● Accelerator pedal: Fully depressed	1.95 - 2.40V
106	R/B	Accelerator pedal position sensor 1	**[Ignition switch: ON]** ● Engine stopped ● Accelerator pedal: Fully released	0.5 - 1.0V
			[Ignition switch: ON] ● Engine stopped ● Accelerator pedal: Fully depressed	3.9 - 4.7V

Diagnostic Procedure

ABS006Y1

1. CHECK GROUND CONNECTIONS

1. Turn ignition switch OFF.
2. Loosen and retighten ground three screws on the body. Refer to EC-170, "Ground Inspection" .

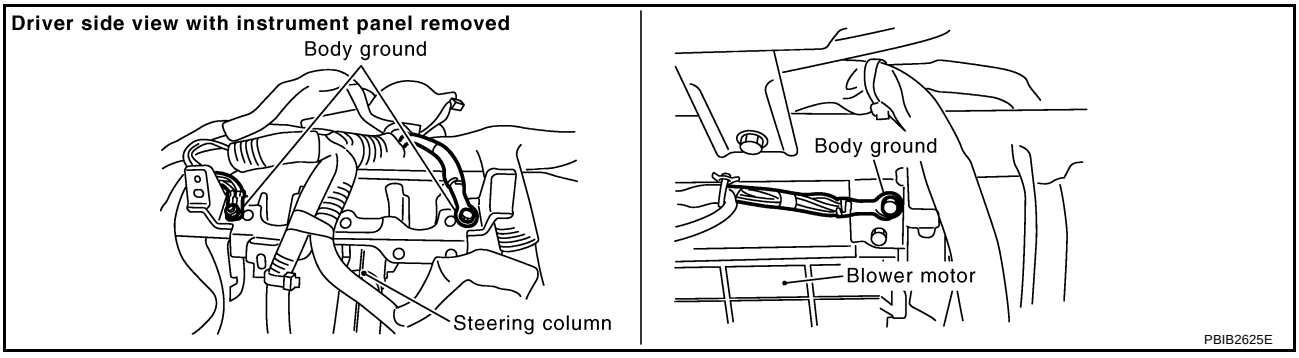

OK or NG

OK >> GO TO 2.
NG >> Repair or replace ground connections.

2. CHECK APP SENSOR 1 POWER SUPPLY CIRCUIT

1. Disconnect accelerator pedal position (APP) sensor harness connector.
2. Turn ignition switch ON.

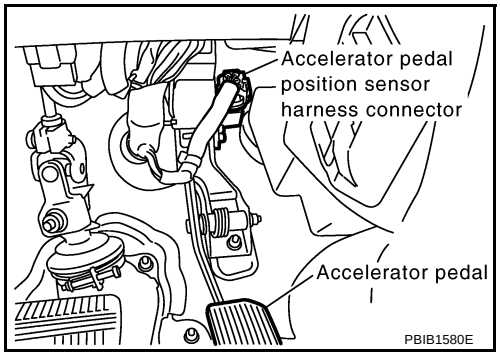

3. Check voltage between APP sensor terminals 6 and ground with CONSULT-II or tester.

Voltage: Approximately 5V

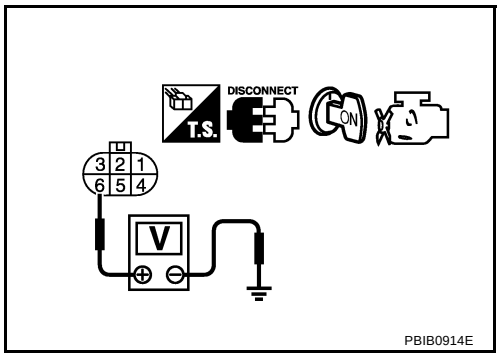

OK or NG

OK >> GO TO 4.
NG >> GO TO 3.

3. DETECT MALFUNCTIONING PART

Check the following.

- Harness connectors E211, M41
- Harness for open or short between ECM and accelerator pedal position sensor

>> Repair open circuit or short to ground or short to power in harness or connectors.

4. CHECK APP SENSOR 2 POWER SUPPLY CIRCUIT-I

Check voltage between APP sensor terminal 4 and ground with CONSULT-II or tester.

Voltage: Approximately 5V

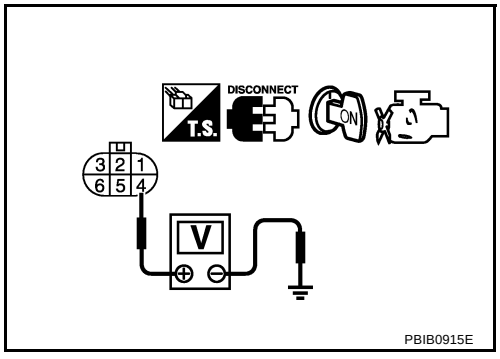

OK or NG

OK >> GO TO 11.
NG >> GO TO 5.

5. CHECK APP SENSOR 2 POWER SUPPLY CIRCUIT-II

1. Turn ignition switch OFF.
2. Disconnect ECM harness connector.
3. Check harness continuity between APP sensor terminal 4 and ECM terminal 91.
   Refer to wiring diagram.

Continuity should exist.

OK or NG

OK >> GO TO 7.
NG >> GO TO 6.

6. DETECT MALFUNCTIONING PART

Check the following.

- Harness connectors E211, M41
- Harness for open or short between ECM and accelerator pedal position sensor

>> Repair open circuit or short to ground or short to power in harness or connectors.

7. CHECK APP SENSOR 2 POWER SUPPLY CIRCUIT-III

Check the following.

- Harness for short to power and short to ground, between the following terminals.

ECM terminal	Sensor terminal	Reference Wiring Diagram
91	APP sensor terminal 4	EC-628
47	Electric throttle control actuator terminal 1	EC-280

OK or NG

OK >> GO TO 9.
NG >> Repair open circuit or short to ground or short to power in harness connectors.

8. CHECK THROTTLE POSITION SENSOR

Refer to EC-284, "Component Inspection" .

OK or NG

OK >> GO TO 16.
NG >> GO TO 9.

9. REPLACE ELECTRIC THROTTLE CONTROL ACTUATOR

1. Replace electric throttle control actuator.
2. Perform EC-96, "Throttle Valve Closed Position Learning" .
3. Perform EC-97, "Idle Air Volume Learning" .

>> **INSPECTION END**

10. CHECK APP SENSOR GROUND CIRCUIT FOR OPEN AND SHORT

1. Turn ignition switch OFF.
2. Disconnect ECM harness connector.
3. Check harness continuity between APP sensor terminals 3 and ECM terminal 82, APP sensor terminal 1 and ECM terminal 83.
   Refer to Wiring Diagram.

   Continuity should exist.

4. Also check harness for short to ground and short to power.

OK or NG

OK >> GO TO 12.
NG >> GO TO 11.

11. DETECT MALFUNCTIONING PART

Check the following.

- Harness connectors E211, M41
- Harness for open or short between ECM and accelerator pedal position sensor

>> Repair open circuit or short to ground or short to power in harness or connectors.

12. CHECK APP SENSOR INPUT SIGNAL CIRCUIT FOR OPEN AND SHORT

1. Check harness continuity between ECM terminal 106 and APP sensor terminal 5, ECM terminal 98 and APP sensor terminal 2.
   Refer to Wiring Diagram.

   Continuity should exist.

2. Also check harness for short to ground and short to power.

OK or NG

OK >> GO TO 14.
NG >> GO TO 13.

13. DETECT MALFUNCTIONING PART

Check the following.

- Harness connectors E211, M41
- Harness for open or short between ECM and accelerator pedal position sensor

>> Repair open circuit or short to ground or short to power in harness or connectors.

14. CHECK APP SENSOR

Refer to EC-647, "Component Inspection" .

OK or NG

OK >> GO TO 16.
NG >> GO TO 15.

15. REPLACE ACCELERATOR PEDAL ASSEMBLY

1. Replace accelerator pedal assembly.
2. Perform EC-96, "Accelerator Pedal Released Position Learning" .
3. Perform EC-96, "Throttle Valve Closed Position Learning" .
4. Perform EC-97, "Idle Air Volume Learning" .

>> **INSPECTION END**

16. CHECK INTERMITTENT INCIDENT

Refer to EC-163, "TROUBLE DIAGNOSIS FOR INTERMITTENT INCIDENT" .

>> **INSPECTION END**

Component Inspection

ABS006Y2

ACCELERATOR PEDAL POSITION SENSOR

1. Reconnect all harness connectors disconnected.
2. Turn ignition switch ON.
3. Check voltage between ECM terminals 106 (APP sensor 1 signal), 98 (APP sensor 2 signal) and ground under the following conditions.

Terminal	Accelerator pedal	Voltage
106 (Accelerator pedal position sensor 1)	Fully released	0.5 - 1.0V
	Fully depressed	3.9 - 4.7V
98 (Accelerator pedal position sensor 2)	Fully released	0.15 - 0.60V
	Fully depressed	1.95 - 2.40V

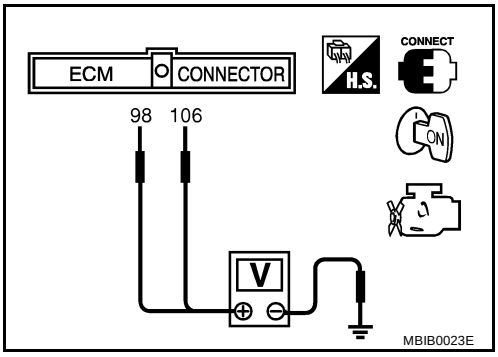

4. If NG, replace accelerator pedal assembly and go to next step.
5. Perform EC-96, "Accelerator Pedal Released Position Learning" .
6. Perform EC-96, "Throttle Valve Closed Position Learning" .
7. Perform EC-97, "Idle Air Volume Learning" .

Removal and Installation

ABS006Y3

ACCELERATOR PEDAL

Refer to ACC-3, "ACCELERATOR CONTROL SYSTEM" .

IGNITION SIGNAL

PFP:22448

Component Description

ABS006Y4

IGNITION COIL & POWER TRANSISTOR

The ignition signal from the ECM is sent to and amplified by the power transistor. The power transistor turns ON and OFF the ignition coil primary circuit. This ON/OFF operation induces the proper high voltage in the coil secondary circuit.

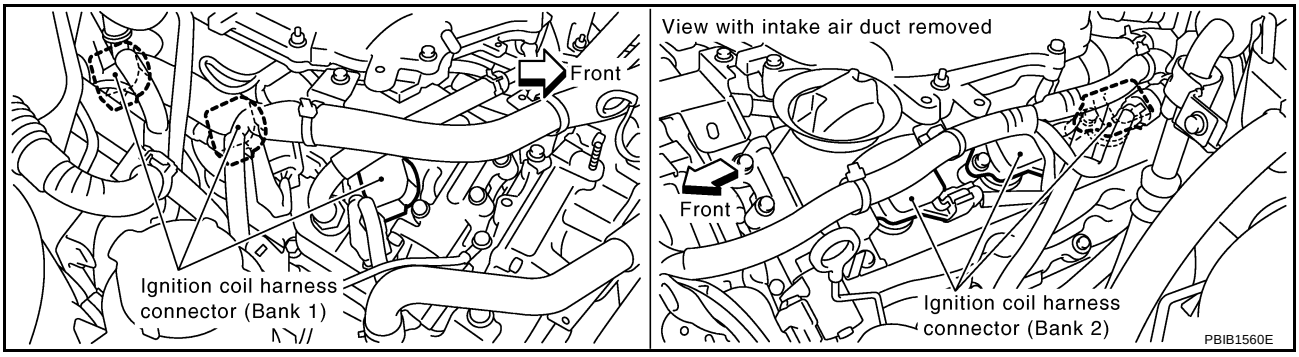

Wiring Diagram

ABS006Y5

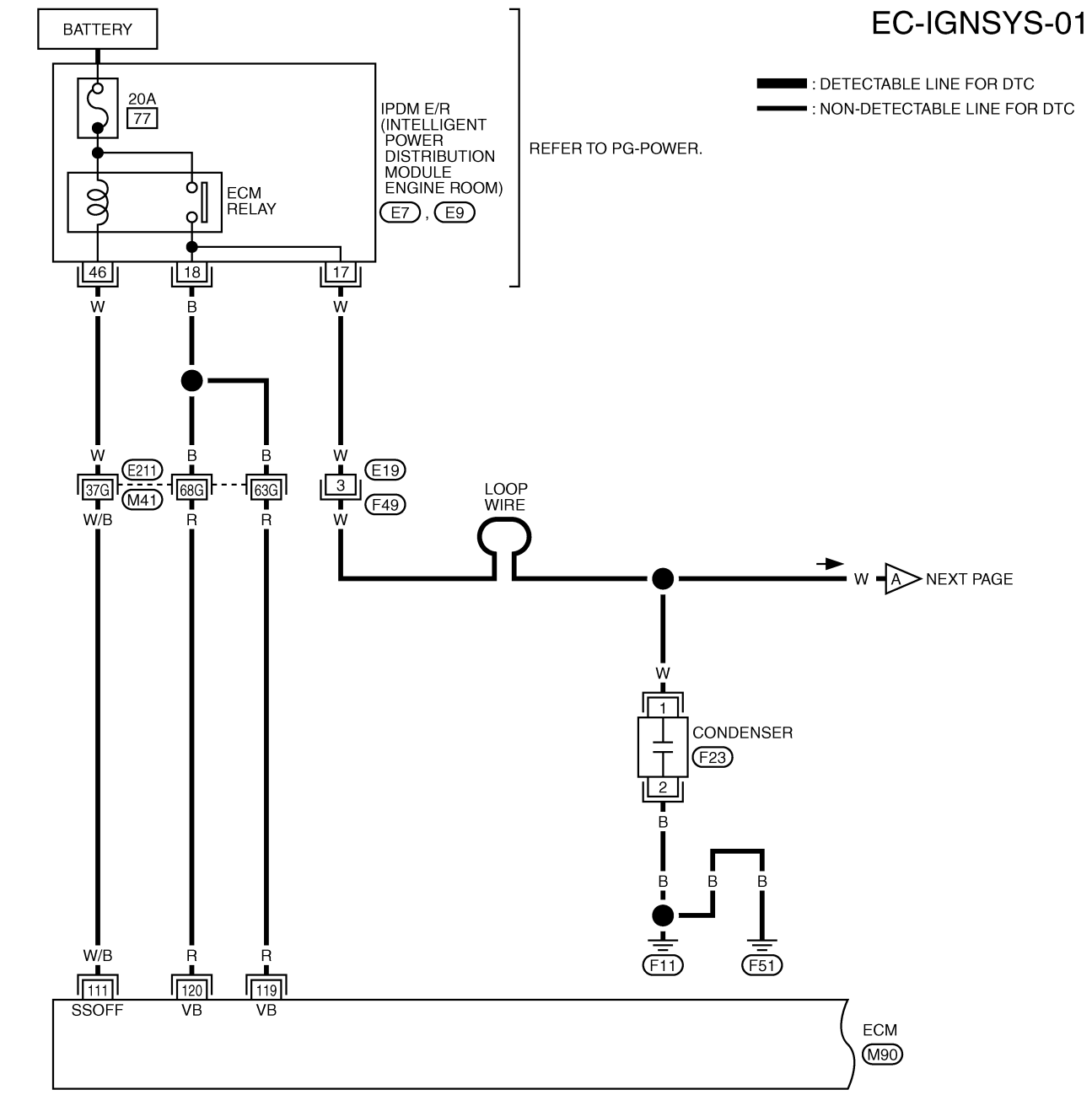

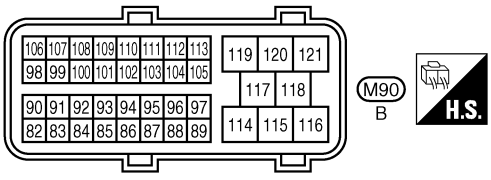

REFER TO THE FOLLOWING.
E211 -SUPER MULTIPLE JUNCTION (SMJ)

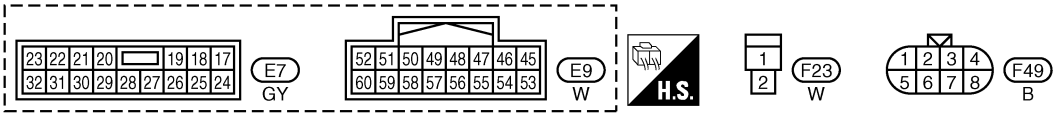

TBWM0734E

Specification data are reference values and are measured between each terminal and ground.

CAUTION:

Do not use ECM ground terminals when measuring input/output voltage. Doing so may result in damage to the ECM's transistor. Use a ground other than ECM terminals, such as the ground.

TERMINAL NO.	WIRE COLOR	ITEM	CONDITION	DATA (DC Voltage)
111	W/B	ECM relay (Self shut-off)	**[Engine is running]** **[Ignition switch: OFF]** ● For a few seconds after turning ignition switch OFF	0 - 1.5V
			[Ignition switch: OFF] ● More than a few seconds passed after turning ignition switch OFF	BATTERY VOLTAGE (11 - 14V)
119 120	R R	Power supply for ECM	**[Ignition switch: ON]**	BATTERY VOLTAGE (11 - 14V)

EC-IGNSYS-02

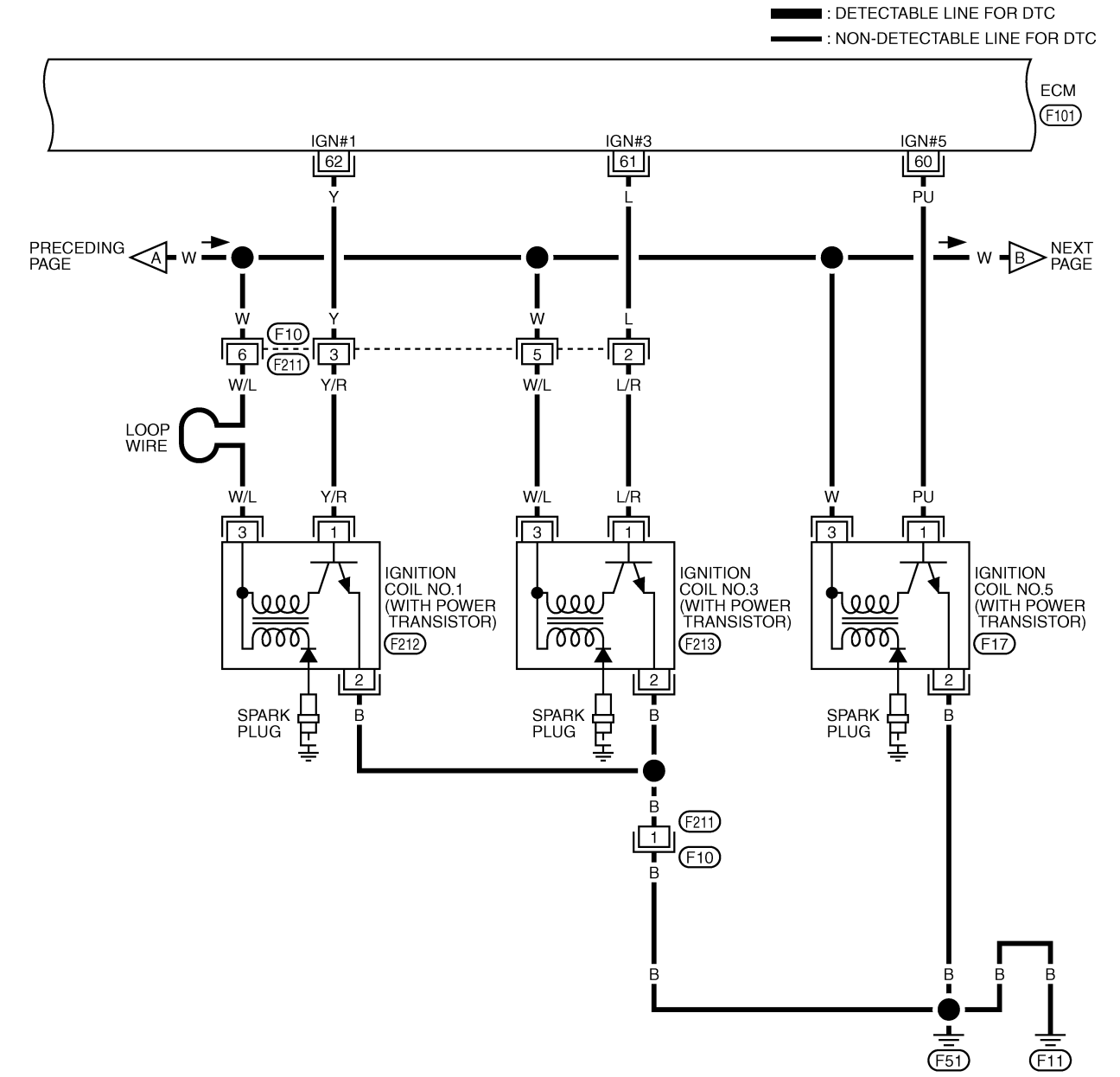

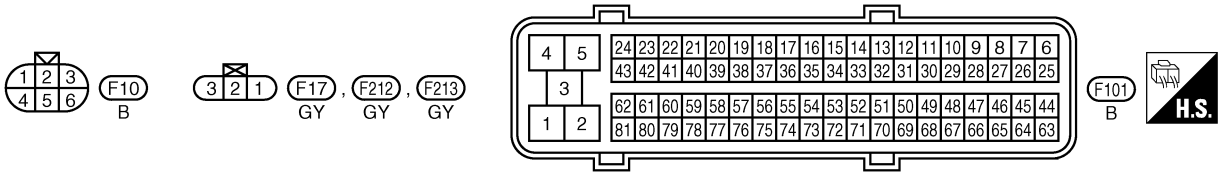

TBWM0735E

Specification data are reference values and are measured between each terminal and ground.
Pulse signal is measured by CONSULT-II.

CAUTION:

Do not use ECM ground terminals when measuring input/output voltage. Doing so may result in damage to the ECM's transistor. Use a ground other than ECM terminals, such as the ground.

TERMINAL NO.	WIRE COLOR	ITEM	CONDITION	DATA (DC Voltage)
60 61 62	PU L Y	Ignition signal No. 5 Ignition signal No. 3 Ignition signal No. 1	**[Engine is running]** ● **Warm-up condition** ● Idle speed **NOTE:** The pulse cycle changes depending on rpm at idle	0 - 0.2V★ 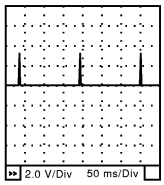 SEC986C
			[Engine is running] ● **Warm-up condition** ● Engine speed is 2,500 rpm	0.1 - 0.4V★ 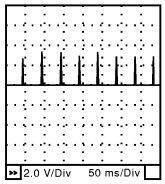 SEC987C

★: Average voltage for pulse signal (Actual pulse signal can be confirmed by oscilloscope.)

EC-IGNSYS-03

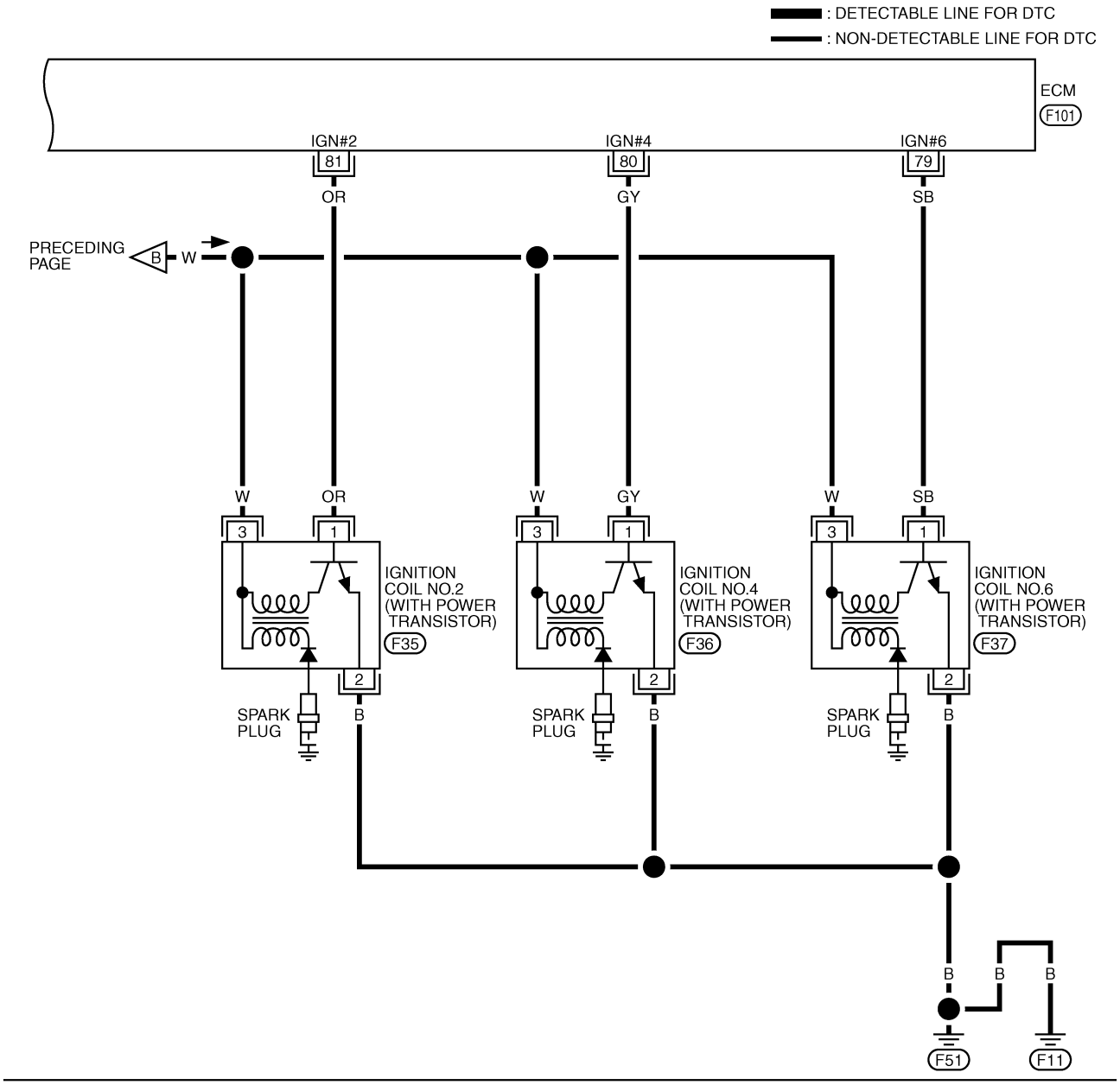

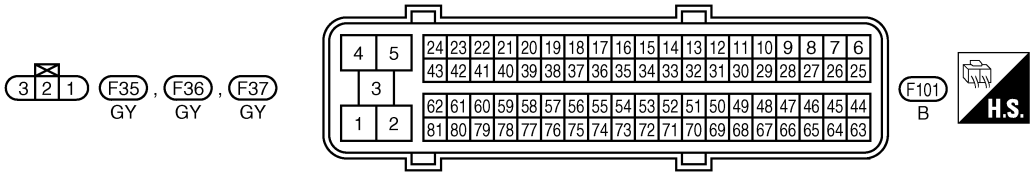

TBWM0736E

Specification data are reference values and are measured between each terminal and ground.
Pulse signal is measured by CONSULT-II.

CAUTION:

Do not use ECM ground terminals when measuring input/output voltage. Doing so may result in damage to the ECM's transistor. Use a ground other than ECM terminals, such as the ground.

TERMINAL NO.	WIRE COLOR	ITEM	CONDITION	DATA (DC Voltage)
79 80 81	SB GY OR	Ignition signal No. 6 Ignition signal No. 4 Ignition signal No. 2	**[Engine is running]** ● **Warm-up condition** ● Idle speed **NOTE:** The pulse cycle changes depending on rpm at idle	0 - 0.2V★ 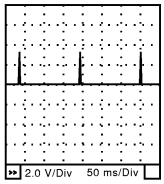 SEC986C
			[Engine is running] ● **Warm-up condition** ● Engine speed is 2,500 rpm	0.1 - 0.4V★ 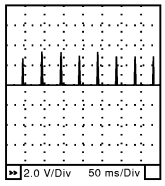 SEC987C

★: Average voltage for pulse signal (Actual pulse signal can be confirmed by oscilloscope.)

Diagnostic Procedure

ABS006Y6

1. CHECK ENGINE START

Turn ignition switch OFF, and restart engine.

Is engine running?

Yes or No

Yes (With CONSULT-II)>>GO TO 2.
Yes (Without CONSULT-II)>>GO TO 3.
No >> GO TO 4.

2. CHECK OVERALL FUNCTION

With CONSULT-II

1. Perform “POWER BALANCE” in “ACTIVE TEST” mode with CONSULT-II.
2. Make sure that each circuit produces a momentary engine speed drop.

OK or NG

OK >> **INSPECTION END**
NG >> GO TO 10.

ACTIVE TEST	
POWER BALANCE	
MONITOR	
ENG SPEED	XXX rpm
MAS A/F SE-B1	XXX V

PBIB0133E

3. CHECK OVERALL FUNCTION

Without CONSULT-II

1. Let engine idle.
2. Read the voltage signal between ECM terminals 60, 61, 62, 79, 80, 81 and ground with an oscilloscope.
3. Verify that the oscilloscope screen shows the signal wave as shown below.
   NOTE:
   The pulse cycle changes depending on rpm at idle.

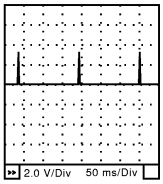

SEC986C

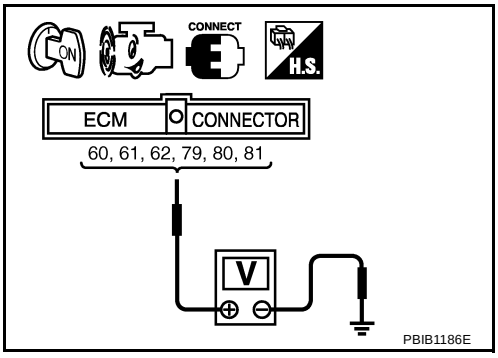

OK or NG

OK >> **INSPECTION END**
NG >> GO TO 10.

4. CHECK IGNITION COIL POWER SUPPLY CIRCUIT-I

1. Turn ignition switch OFF, wait at least 10 seconds and then turn ON.
2. Check voltage between ECM terminals 119, 120 and ground with CONSULT-II or tester.

   Voltage: Battery voltage

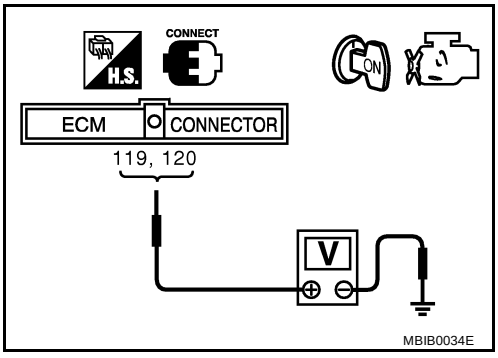

OK or NG

OK >> GO TO 5.
NG >> Go to EC-164, "POWER SUPPLY AND GROUND CIRCUIT" .

5. CHECK IGNITION COIL POWER SUPPLY CIRCUIT-II

1. Turn ignition switch OFF.
2. Disconnect condenser harness connector.
3. Turn ignition switch ON.

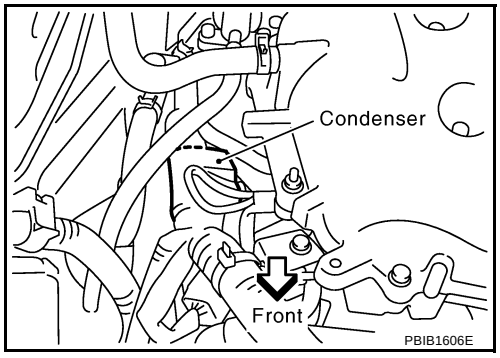

4. Check voltage between condenser terminal 1 and ground with CONSULT-II or tester.

Voltage: Battery voltage

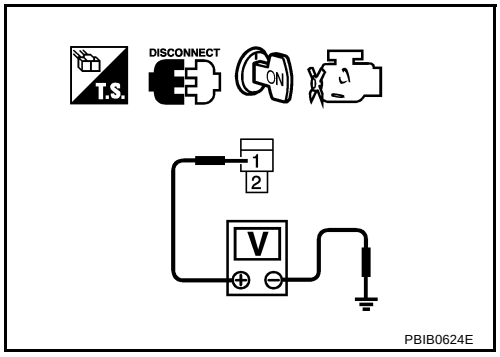

OK or NG

OK >> GO TO 7.
NG >> GO TO 6.

6. CHECK IGNITION COIL POWER SUPPLY CIRCUIT-III

1. Turn ignition switch OFF.
2. Disconnect IPDM E/R harness connector E7.
3. Check harness continuity between IPDM E/R terminal 17 and condenser terminal 1. Refer to Wiring Diagram.

Continuity should exist.

4. Also check harness for short to ground and short to power.

OK or NG

OK >> GO TO 17.
NG >> GO TO 7.

7. DETECT MALFUNCTIONING PART

Check the following.

- Harness connectors E19, F49
- Harness for open or short between condenser and IPDM E/R

>> Repair open circuit or short to ground or short to power in harness or connectors.

8. CHECK CONDENSER GROUND CIRCUIT FOR OPEN AND SHORT

1. Turn ignition switch OFF.
2. Check harness continuity between condenser terminal 2 and ground.
   Refer to Wiring Diagram.

   Continuity should exist.

3. Also check harness for short to power.

OK or NG

OK >> GO TO 9.
NG >> Repair open circuit or short to power in harness or connectors.

9. CHECK CONDENSER

Refer to EC-659, "Component Inspection" .

OK or NG

OK >> GO TO 10.
NG >> Replace condenser.

10. CHECK IGNITION COIL POWER SUPPLY CIRCUIT-IV

1. Turn ignition switch OFF.
2. Reconnect all harness connectors disconnected.
3. Disconnect ignition coil harness connector.

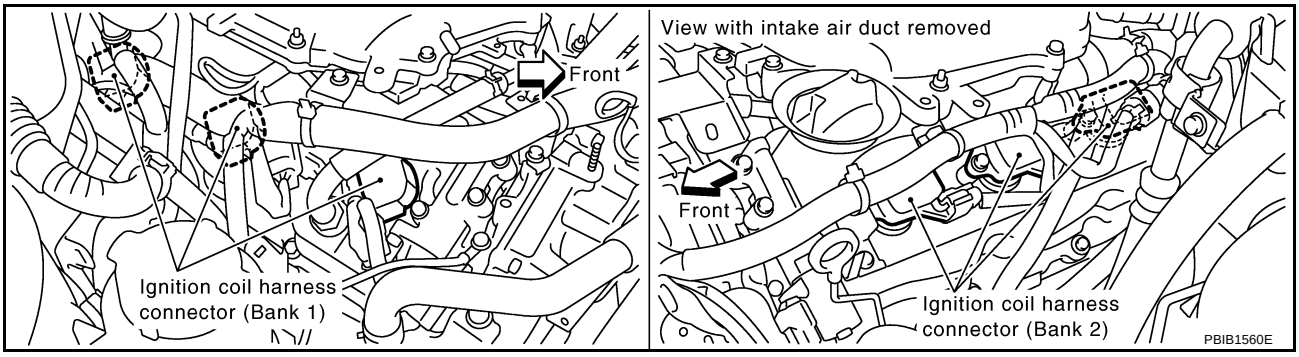

4. Turn ignition switch ON.
5. Check voltage between ignition coil terminal 3 and ground with CONSULT-II or tester.

   Voltage: Battery voltage

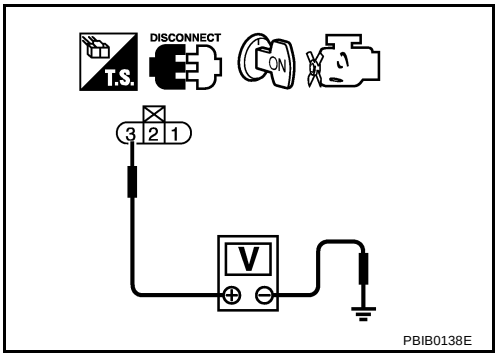

OK or NG

OK >> GO TO 12.
NG >> GO TO 11.

11. DETECT MALFUNCTIONING PART

Check the following.

- Harness connectors F10, F211
- Harness for open or short between ignition coil and harness connector F49

>> Repair or replace harness or connectors.

12. CHECK IGNITION COIL GROUND CIRCUIT FOR OPEN AND SHORT

1. Turn ignition switch OFF.
2. Check harness continuity between ignition coil terminal 2 and ground.
   Refer to Wiring Diagram.

   Continuity should exist.

3. Also check harness for short to power.

OK or NG

OK >> GO TO 14.
NG >> GO TO 13.

13. DETECT MALFUNCTIONING PART

Check the following.

- Harness connectors F211, F10
- Harness for open or short between ignition coil and ground

>> Repair open circuit or short to power in harness or connectors.

14. CHECK IGNITION COIL OUTPUT SIGNAL CIRCUIT FOR OPEN AND SHORT

1. Disconnect ECM harness connector.
2. Check harness continuity between ECM terminals 60, 61, 62, 79, 80, 81 and ignition coil terminal 1.
   Refer to Wiring Diagram.

   Continuity should exist.

3. Also check harness for short to ground and short to power.

OK or NG

OK >> GO TO 16.
NG >> GO TO 15.

15. DETECT MALFUNCTIONING PART

Check the following.

- Harness connectors F10, F211
- Harness for open or short between ignition coil and ECM

>> Repair open circuit or short to ground or short to power in harness or connectors.

16. CHECK IGNITION COIL WITH POWER TRANSISTOR

Refer to EC-659, "Component Inspection" .

OK or NG

OK >> GO TO 17.
NG >> Replace ignition coil with power transistor.

17. CHECK INTERMITTENT INCIDENT

Refer to EC-163, "TROUBLE DIAGNOSIS FOR INTERMITTENT INCIDENT" .

OK or Ng

OK >> Replace IPDM E/R.
NG >> Repair open circuit or short to ground a short to power in harness connectors.

Component Inspection

ABS006Y7

IGNITION COIL WITH POWER TRANSISTOR

CAUTION:

Do the following procedure in the place where ventilation is good without the combustible.

1. Turn ignition switch OFF.
2. Disconnect ignition coil harness connector.
3. Check resistance between ignition coil terminals as follows.

Terminal No. (Polarity)	Resistance Ω [at 25°C (77°F)]
1 and 2	Except 0 or ∞
1 and 3	Except 0
2 and 3	

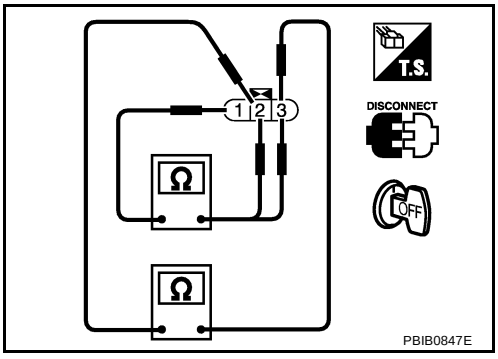

4. If NG, Replace ignition coil with power transistor.
   If OK, go to next step.
5. Turn ignition switch OFF.
6. Reconnect all harness connectors disconnected.
7. Remove fuel pump fuse in IPDM E/R to release fuel pressure.

   NOTE:
   Do not use CONSULT-II to release fuel pressure, or fuel pressure applies again during the following procedure.

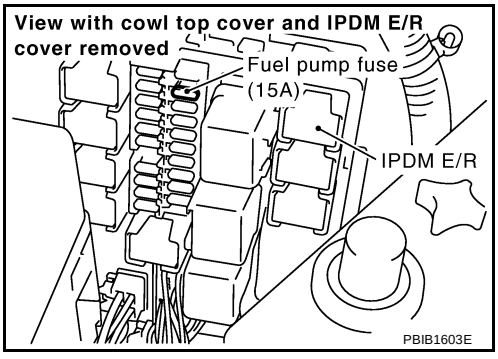

8. Start engine.
9. After engine stalls, crank it 2 or 3 times to release all fuel pressure.
10. Turn ignition switch OFF.
11. Remove ignition coil harness connectors to avoid the electrical discharge from the ignition coils.
12. Remove ignition coil and spark plug of the cylinder to be checked.
13. Crank engine for 5 seconds or more to remove combustion gas in the cylinder.
14. Connect spark plug and harness connector to ignition coil.
15. Fix ignition coil using a rope etc. with gap of 13 - 17 mm between the edge of the spark plug and grounded metal portion as shown in the figure.
16. Crank engine for about three seconds, and check whether spark is generated between the spark plug and the grounded part.

    Spark should be generated.

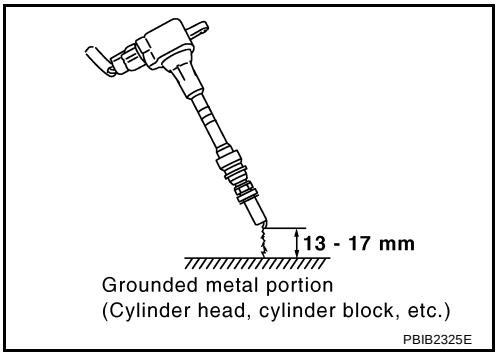

    CAUTION:
    - **Do not approach to the spark plug and the ignition coil within 50cm. Be careful not to get an electrical shock while checking, because the electrical discharge voltage becomes 20kV or more.**
    - **It might cause to damage the ignition coil if the gap of 17 mm or more is taken.**

    NOTE:
    When the gap is 13 mm or less, the spark might be generated even if the coil is malfunctioning.
17. If NG, Replace ignition coil with power transistor.

CONDENSER

1. Turn ignition switch OFF.
2. Disconnect condenser harness connector.
3. Check resistance between condenser terminals 1 and 2.

Resistance: Above 1 MΩ at 25°C (77°F)

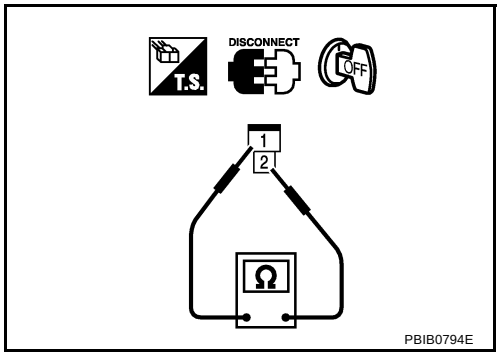

ABS006Y8

Removal and Installation

IGNITION COIL WITH POWER TRANSISTOR

Refer to EM-42, "IGNITION COIL" .

INJECTOR CIRCUIT

PFP:16600

Component Description

ABS006Y9

The fuel injector is a small, precise solenoid valve. When the ECM supplies a ground to the injector circuit, the coil in the injector is energized. The energized coil pulls the Ball valve back and allows fuel to flow through the injector into the intake manifold. The amount of fuel injected depends upon the injection pulse duration. Pulse duration is the length of time the injector remains open. The ECM controls the injection pulse duration based on engine fuel needs.

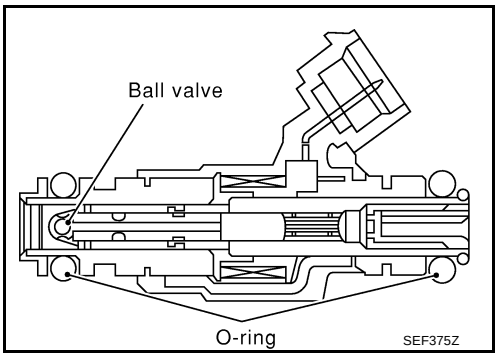

CONSULT-II Reference Value in Data Monitor Mode

ABS006YA

Specification data are reference values.

MONITOR ITEM	CONDITION		SPECIFICATION
B/FUEL SCHDL	See EC-153, "TROUBLE DIAGNOSIS - SPECIFICATION VALUE" .		
INJ PULSE-B1 INJ PULSE-B2	● Engine: After warming up ● Shift lever: P or N ● Air conditioner switch: OFF ● No-load	Idle	2.0 - 3.0 msec
		2,000 rpm	1.9 - 2.9 msec

Wiring Diagram

ABS006YB

EC-INJECT-01

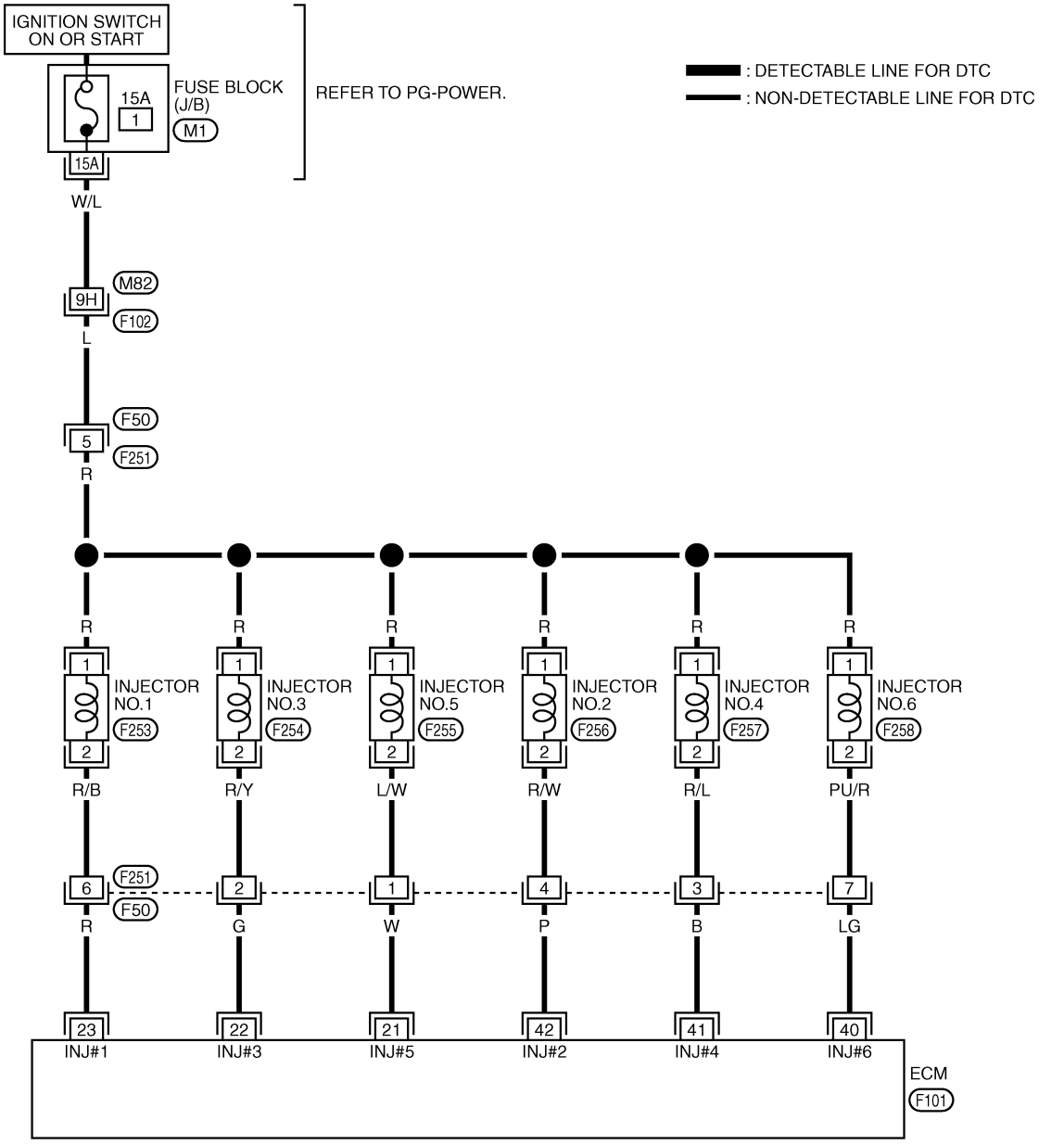

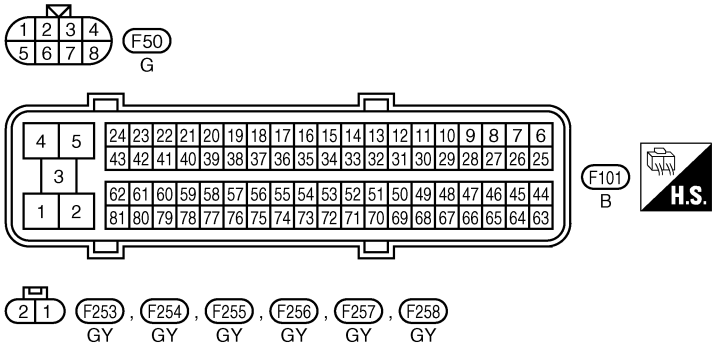

REFER TO THE FOLLOWING.

F102 -SUPER MULTIPLE JUNCTION (SMJ)

M1 -FUSE BLOCK-JUNCTION BOX (J/B)

TBWM0310E

Specification data are reference values and are measured between each terminal and ground.
Pulse signal is measured by CONSULT-II.

CAUTION:
Do not use ECM ground terminals when measuring input/output voltage. Doing so may result in damage to the ECM's transistor. Use a ground other than ECM terminals, such as the ground.

TERMINAL NO.	WIRE COLOR	ITEM	CONDITION	DATA (DC Voltage)
21 22 23 40 41 42	W G R LG B P	Injector No. 5 Injector No. 3 Injector No. 1 Injector No. 6 Injector No. 4 Injector No. 2	**[Engine is running]** ● **Warm-up condition** ● Idle speed **NOTE:** The pulse cycle changes depending on rpm at idle	BATTERY VOLTAGE (11 - 14V)★ 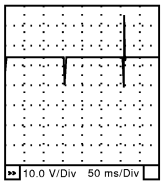 SEC984C
			[Engine is running] ● **Warm-up condition** ● Engine speed is 2,000 rpm	BATTERY VOLTAGE (11 - 14V)★ 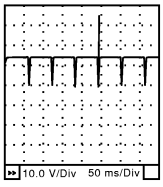 SEC985C

★: Average voltage for pulse signal (Actual pulse signal can be confirmed by oscilloscope.)

Diagnostic Procedure

ABS006YC

1. INSPECTION START

Turn ignition switch to START.
Is any cylinder ignited?

Yes or No

Yes (With CONSULT-II)>>GO TO 2.
Yes (without CONSULT-II)>>GO TO 3.
No >> GO TO 6.

2. CHECK OVERALL FUNCTION

With CONSULT-II

1. Start engine.
2. Perform “POWER BALANCE” in “ACTIVE TEST” mode with CONSULT-II.
3. Make sure that each circuit produces a momentary engine speed drop.

ACTIVE TEST	
POWER BALANCE	
MONITOR	
ENG SPEED	XXX rpm
MAS A/F SE-B1	XXX V

PBIB0133E

OK or NG

OK >> **INSPECTION END**
NG >> GO TO 6.

3. CHECK FUNCTION OF INJECTOR-I

With out CONSULT-II

1. Turn ignition switch OFF.
2. Disconnect harness connector F50, F251
3. Turn ignition switch ON.

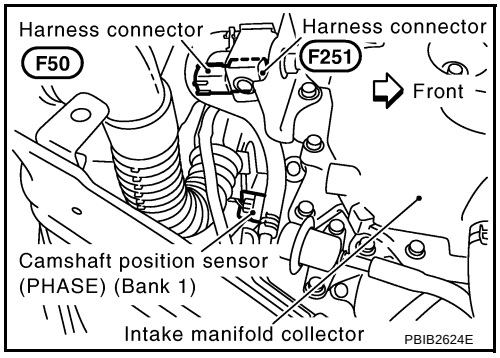

4. Check voltage between harness connector F50 terminal 5 and ground with CONSULT-II or tester.

   Voltage: Battery voltage

5. Turn ignition switch OFF.
6. Disconnect ECM harness connector.
7. Check harness continuity between harness connector F50 and ECM as follows.
   Refer to Wiring Diagram.

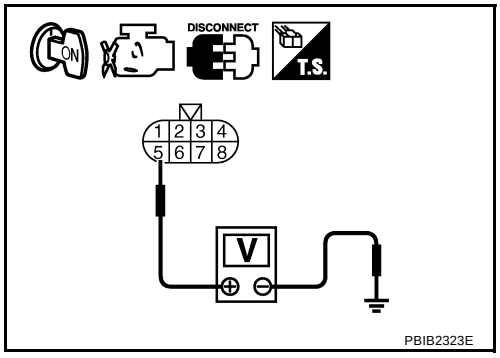

Cylinder	Harness connector F50 terminal	ECM terminal
1	6	23
2	4	42
3	2	22
4	3	41
5	1	21
6	7	40

   Continuity should exist.

8. Also check harness for short to ground and short to power.

OK or NG

OK >> GO TO 5.
NG >> GO TO 4.

4. DETECT MALFUNCTIONING PART

Check the following.

- Harness connectors M82, F102
- Harness connectors F50, F251
- Fuse block (J/B) connector M4
- 15A fuse
- Harness for open or short between harness connector F50 and fuse
- Harness for open or short between harness connector F50 and ECM

>> Repair open circuit or short to ground or short to power in harness or connectors.

5. CHECK FUNCTION OF INJECTOR-II

Provide battery voltage between harness connector F251 as follows and then interrupt it. Listen to each injector operating sound.

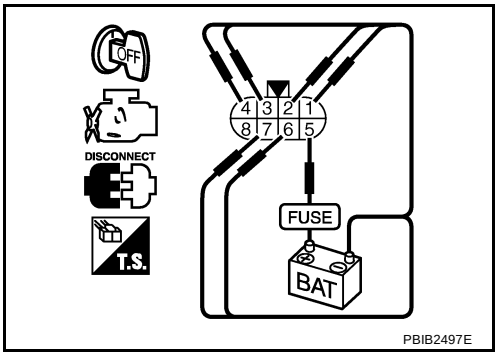

Cylinder	Harness connector F251 terminal	
	(+)	(–)
1	5	6
2	5	4
3	5	2
4	5	3
5	5	1
6	5	7

Operating sound should exist.

OK or NG

OK >> **INSPECTION END**
NG >> GO TO 6.

6. CHECK INJECTOR POWER SUPPLY CIRCUIT

1. Turn ignition switch OFF.
2. Disconnect injector harness connector.

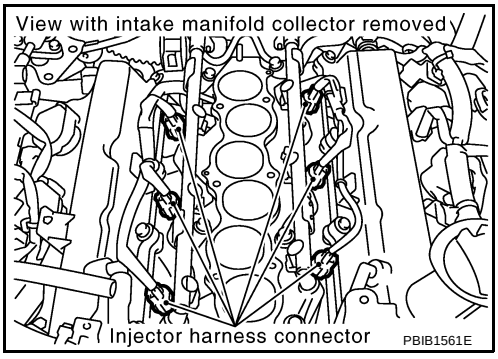

3. Turn ignition switch ON.
4. Check voltage between injector terminal 1 and ground with CONSULT-II or tester.

Voltage: Battery voltage

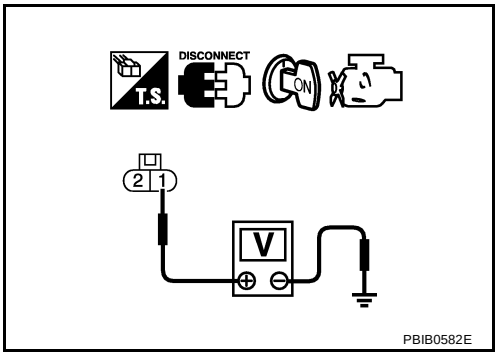

OK or NG

OK >> GO TO 8.
NG >> GO TO 7.

7. DETECT MALFUNCTIONING PART

Check the following.

- Harness connectors M82, F102
- Harness connectors F50, F251
- Fuse block (J/B) connector M4
- 10A fuse
- Harness for open or short between injector and fuse

>> Repair open circuit or short to ground or short to power in harness or connectors.

8. CHECK INJECTOR OUTPUT SIGNAL CIRCUIT FOR OPEN AND SHORT

1. Turn ignition switch OFF.
2. Disconnect ECM harness connector.
3. Check harness continuity between injector terminal 2 and ECM terminals 21, 22, 23, 40, 41, 42.
   Refer to Wiring Diagram.

   Continuity should exist.

4. Also check harness for short to ground and short to power.

OK or NG

OK >> GO TO 10.
NG >> GO TO 9.

9. DETECT MALFUNCTIONING PART

Check the following.

- Harness connectors F251, F50
- Harness for open or short between injector and ECM

>> Repair open circuit or short to ground or short to power in harness or connectors.

10. CHECK INJECTOR

Refer to EC-667, "Component Inspection" .

OK or NG

OK >> GO TO 11.
NG >> Replace injector.

11. CHECK INTERMITTENT INCIDENT

Refer to EC-163, "TROUBLE DIAGNOSIS FOR INTERMITTENT INCIDENT" .

>> **INSPECTION END**

Component Inspection

ABS006YD

INJECTOR

1. Disconnect injector harness connector.
2. Check resistance between terminals as shown in the figure.

Resistance: 13.5 - 17.5Ω [at 10 - 60°C (50 - 140°F)]

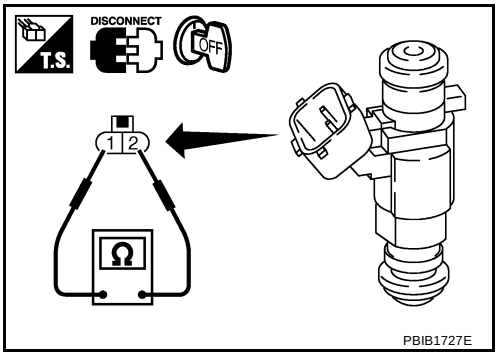

Removal and Installation

ABS006YE

INJECTOR

Refer to EM-45, "FUEL INJECTOR AND FUEL TUBE" .

FUEL PUMP CIRCUIT

PFP:17042

Description

ABS006YF

SYSTEM DESCRIPTION

Sensor	Input Signal to ECM	ECM Function	Actuator
Crankshaft position sensor (POS) Camshaft position sensor (PHASE)	Engine speed*	Fuel pump control	Fuel pump relay
Battery	Battery voltage*		

*: ECM determines the start signal status by the signals of engine speed and battery voltage.

The ECM activates the fuel pump for several seconds after the ignition switch is turned ON to improve engine start ability. If the ECM receives a engine speed signal from the camshaft position sensor (PHASE), it knows that the engine is rotating, and causes the pump to operate. If the engine speed signal is not received when the ignition switch is ON, the engine stalls. The ECM stops pump operation and prevents battery discharging, thereby improving safety. The ECM does not directly drive the fuel pump. It controls the ON/OFF fuel pump relay, which in turn controls the fuel pump.

Condition	Fuel pump operation
Ignition switch is turned to ON.	Operates for 1 second.
Engine running and cranking	Operates.
When engine is stopped	Stops in 1.5 seconds.
Except as shown above	Stops.

COMPONENT DESCRIPTION

A turbine type design fuel pump is used in the furl tank.

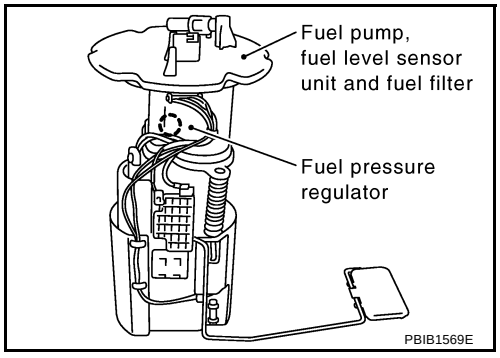

CONSULT-II Reference Value in Data Monitor Mode

ABS006YG

Specification data are reference values.

MONITOR ITEM	CONDITION	SPECIFICATION
FUEL PUMP RLY	● For 1 second after turning ignition switch ON ● Engine running or cranking	ON
	● Except above conditions	OFF

Wiring Diagram

ABS006YH

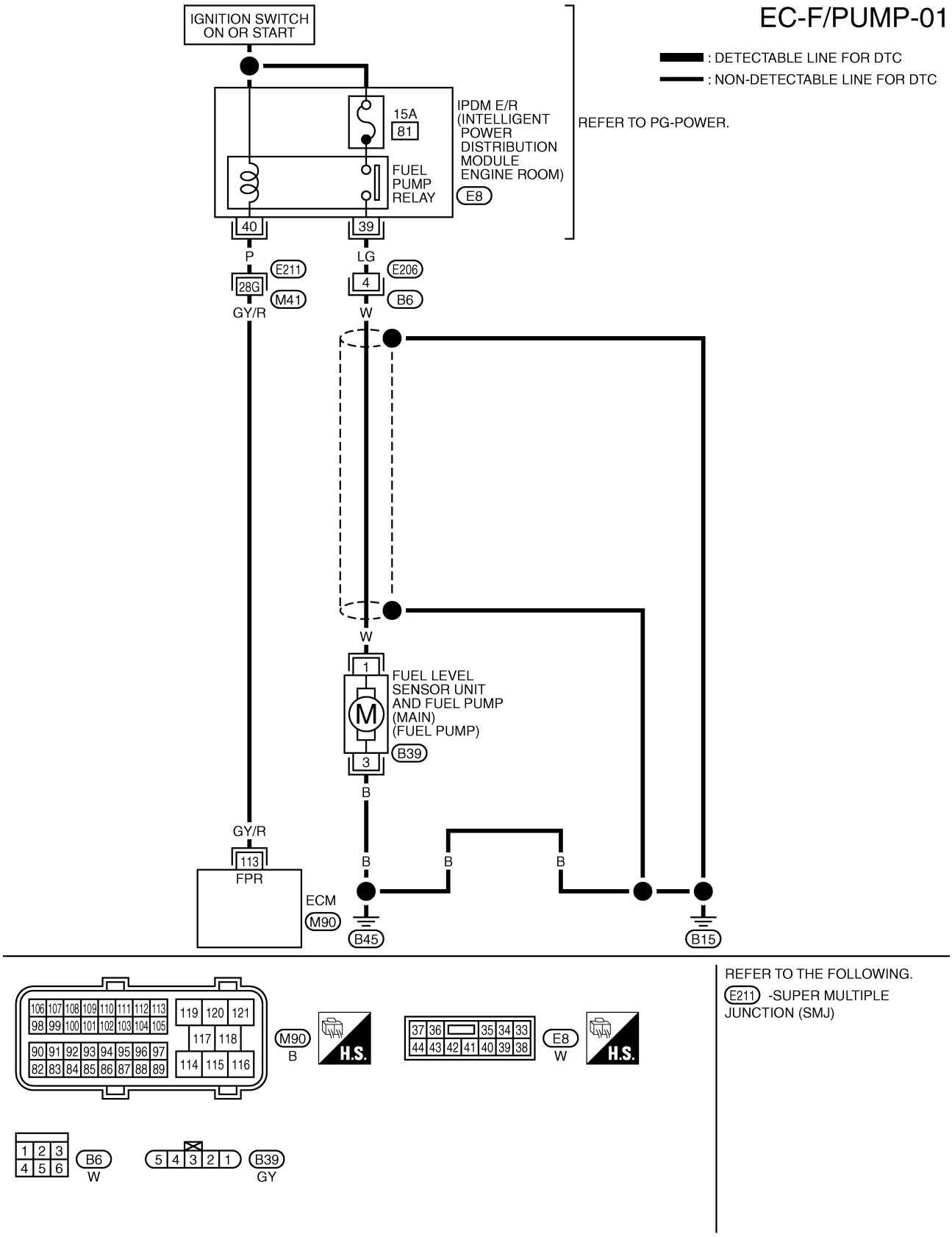

TBWM0737E

Specification data are reference values and are measured between each terminal and ground.

CAUTION:
Do not use ECM ground terminals when measuring input/output voltage. Doing so may result in damage to the ECM's transistor. Use a ground other than ECM terminals, such as the ground.

TERMINAL NO.	WIRE COLOR	ITEM	CONDITION	DATA (DC Voltage)
113	GY/R	Fuel pump relay	**[Ignition switch: ON]** ● For 1 second after turning ignition switch ON **[Engine is running]**	0 - 1.5V
			[Ignition switch: ON] ● More than 1 second after turning ignition switch ON	BATTERY VOLTAGE (11 - 14V)

Diagnostic Procedure

ABS006YI

1. CHECK OVERALL FUNCTION

1. Turn ignition switch ON.
2. Pinch fuel feed hose with two fingers.
   Fuel pressure pulsation should be felt on the fuel feed hose for 1 second after ignition switch is turned ON.

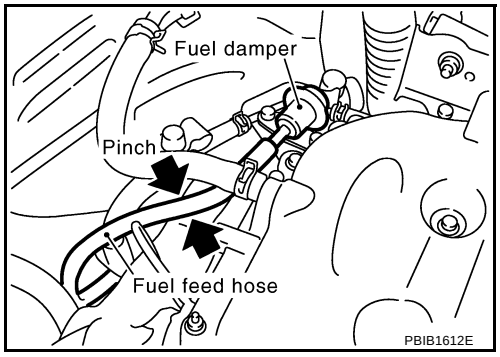

OK or NG

OK >> **INSPECTION END**
NG >> GO TO 2.

2. CHECK FUEL PUMP POWER SUPPLY CIRCUIT-I

1. Turn ignition switch OFF.
2. Disconnect ECM harness connector.
3. Turn ignition switch ON.
4. Check voltage between ECM terminal 113 and ground with CONSULT-II or tester.

Voltage: Battery voltage

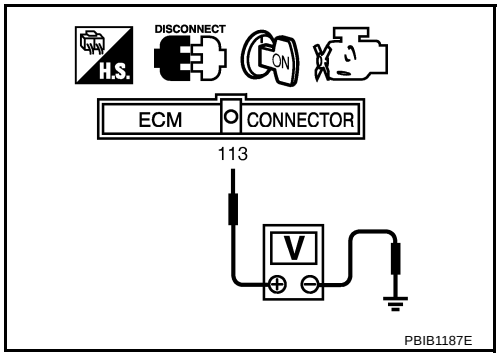

OK or NG

OK >> GO TO 5.
NG >> GO TO 3.

3. CHECK FUEL PUMP POWER SUPPLY CIRCUIT-II

Check voltage between IPDM E/R terminal 40 and ground with CONSULT-II or tester.

Voltage: Battery voltage

OK or NG

OK >> GO TO 4.
NG >> GO TO 11.

4. DETECT MALFUNCTIONING PART

Check the following.

- Harness connectors E211, M41
- Harness for open or short between IPDM E/R and ECM

>> Repair open circuit or short to ground or short to power in harness or connectors.

5. CHECK FUEL PUMP POWER SUPPLY CIRCUIT-III

1. Turn ignition switch OFF.
2. Reconnect all harness connectors disconnected.
3. Disconnect “fuel level sensor unit and fuel pump” harness connector.
4. Turn ignition switch ON.

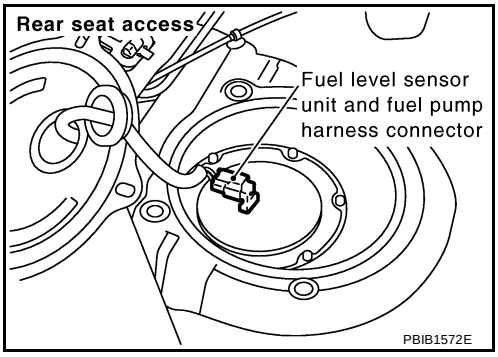

5. Check voltage between “fuel level sensor unit and fuel pump” terminal 1 and ground with CONSULT-II or tester.

Voltage: Battery voltage should exist for 1 second after ignition switch is turned ON.

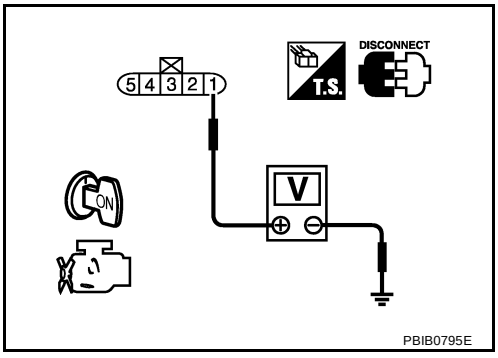

OK or NG

OK >> GO TO 9.
NG >> GO TO 6.

6. CHECK 15A FUSE

1. Turn ignition switch OFF.
2. Disconnect 15A fuse.
3. Check 15A fuse.

OK or NG

OK >> GO TO 7.
NG >> Replace fuse.

7. CHECK FUEL PUMP POWER SUPPLY CIRCUIT-IV

1. Disconnect IPDM E/R harness connector E8.
2. Check harness continuity between IPDM E/R terminal 39 and “fuel level sensor unit and fuel pump” terminal 1.
   Refer to Wiring Diagram.

   Continuity should exist.

3. Also check harness for short to ground and short to power.

OK or NG

OK >> GO TO 11.
NG >> GO TO 8.

8. DETECT MALFUNCTIONING PART

Check the following.

- Harness connectors E206, B6
- Harness for open or short between IPDM E/R and “fuel level sensor unit and fuel pump”

>> Repair open circuit or short to ground or short to power in harness or connectors.

9. CHECK FUEL PUMP GROUND CIRCUIT FOR OPEN AND SHORT

1. Check harness continuity between “fuel level sensor unit and fuel pump” terminal 3 and ground.
   Refer to Wiring Diagram.

   Continuity should exist.

2. Also check harness for short to power.

OK or NG

OK >> GO TO 10.
NG >> Repair open circuit or short to power in harness or connectors.

10. CHECK FUEL PUMP

Refer to EC-1363, "Component Inspection" .

OK or NG

OK >> GO TO 11.
NG >> Replace fuel pump.

11. CHECK INTERMITTENT INCIDENT

Refer to EC-854, "TROUBLE DIAGNOSIS FOR INTERMITTENT INCIDENT" .

OK or NG

OK >> Replace IPDM E/R.
NG >> Repair or replace harness or connectors.

Component Inspection

ABS006YJ

FUEL PUMP

1. Disconnect “fuel level sensor unit and fuel pump” harness connector.

2. Check resistance between “fuel level sensor unit and fuel pump” terminals 1 and 3.

   Resistance: Approximately 0.2 - 5.0Ω [at 25°C (77°F)]

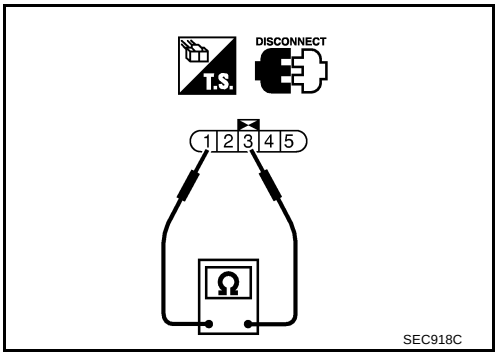

ABS006YK

Removal and Installation

FUEL PUMP

Refer to FL-4, "FUEL LEVEL SENSOR UNIT, FUEL FILTER AND FUEL PUMP ASSEMBLY" .

REFRIGERANT PRESSURE SENSOR

PFP:92136

Component Description

ABS006YL

The refrigerant pressure sensor is installed at the liquid tank of the air conditioner system. The sensor uses an electrostatic volume pressure transducer to convert refrigerant pressure to voltage. The voltage signal is sent to ECM, and ECM controls cooling fan system.

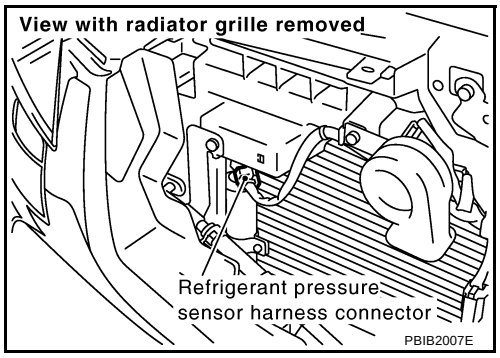

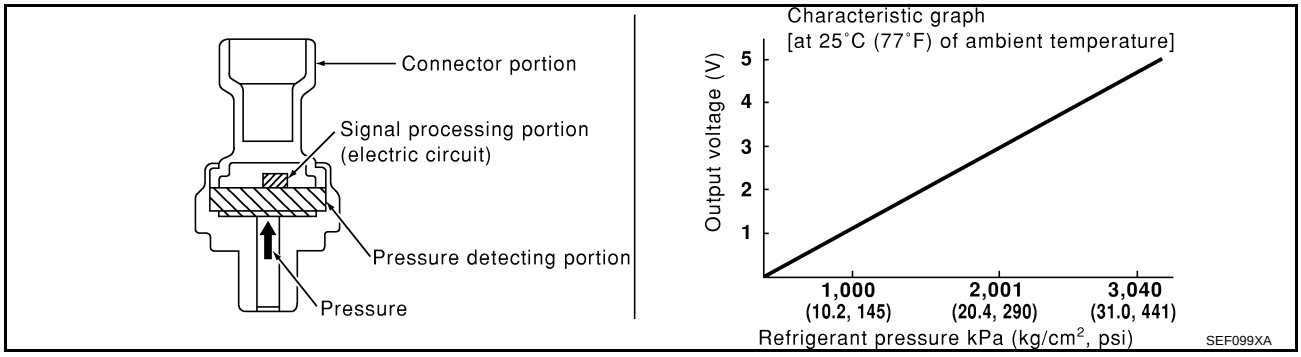

Wiring Diagram

ABS006YM

EC-RP/SEN-01

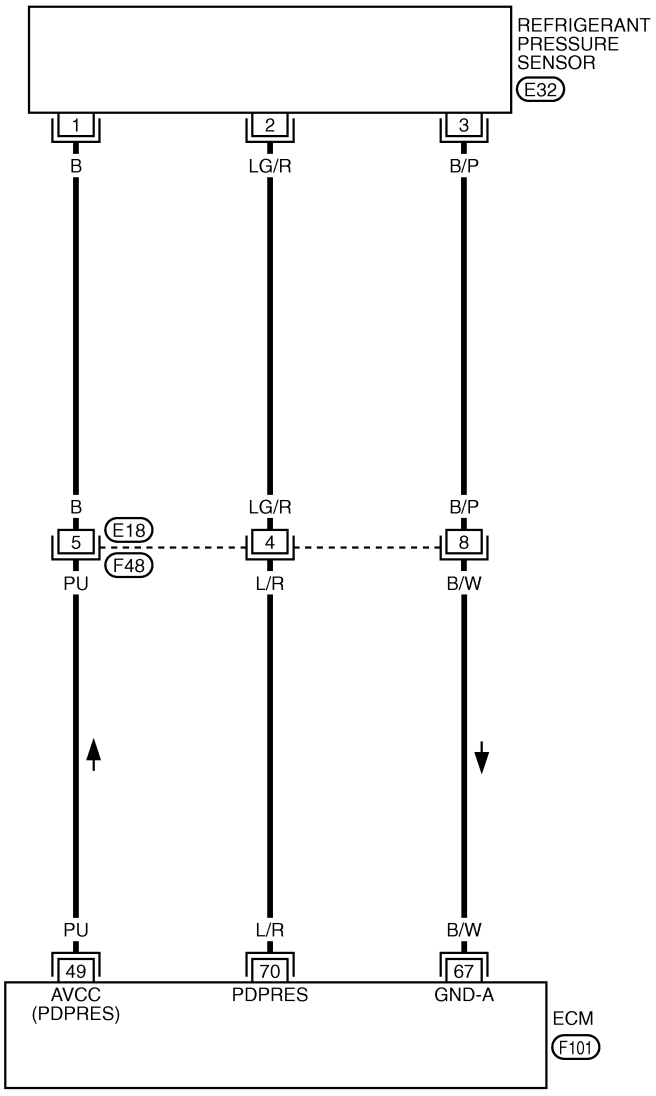

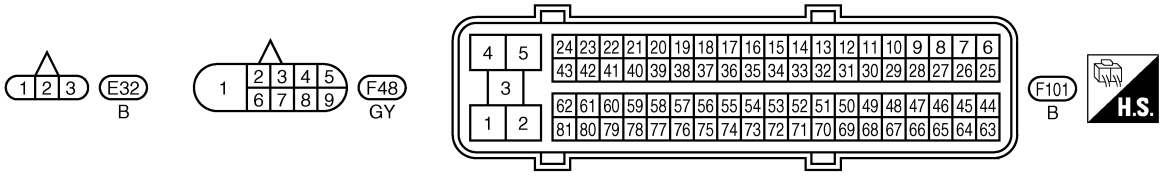

TBWM0312E

Specification data are reference values and are measured between each terminal and ground.

CAUTION:

Do not use ECM ground terminals when measuring input/output voltage. Doing so may result in damage to the ECM's transistor. Use a ground other than ECM terminals, such as the ground.

TERMINAL NO.	WIRE COLOR	ITEM	CONDITION	DATA (DC Voltage)
49	PU	Sensor power supply (Refrigerant pressure sensor)	**[Ignition switch: ON]**	Approximately 5V
67	B/W	Sensor ground	**[Engine is running]** ● **Warm-up condition** ● Idle speed	Approximately 0V
70	L/R	Refrigerant pressure sensor	**[Engine is running]** ● **Warm-up condition** ● Both A/C switch and blower switch are ON (Compressor operates)	1.0 - 4.0V

Diagnostic Procedure

ABS006YN

1. CHECK REFRIGERANT PRESSURE SENSOR OVERALL FUNCTION

1. Start engine and warm it up to normal operating temperature.
2. Turn A/C switch and blower switch ON.
3. Check voltage between ECM terminal 70 and ground with CONSULT-II or tester.

Voltage: 1.0 - 4.0V

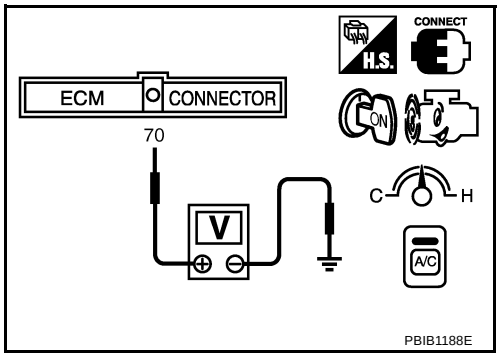

OK or NG

OK >> **INSPECTION END**
NG >> GO TO 2.

2. CHECK GROUND CONNECTIONS

1. Turn A/C switch and blower switch OFF.
2. Stop engine.
3. Turn ignition switch OFF.
4. Loosen and retighten ground three screws on the body. Refer to EC-170, "Ground Inspection" .

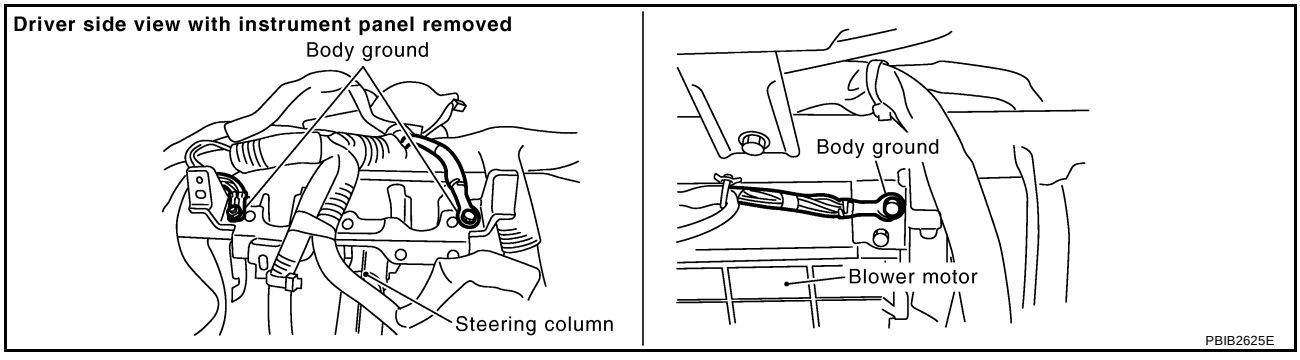

OK or NG

OK >> GO TO 3.
NG >> Repair or replace ground connections.

3. CHECK REFRIGERANT PRESSURE SENSOR POWER SUPPLY CIRCUIT

1. Disconnect refrigerant pressure sensor harness connector.
2. Turn ignition switch ON.

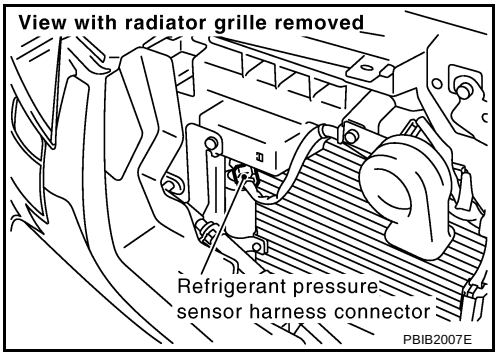

3. Check voltage between refrigerant pressure sensor terminal 1 and ground with CONSULT-II or tester.

Voltage: Approximately 5V

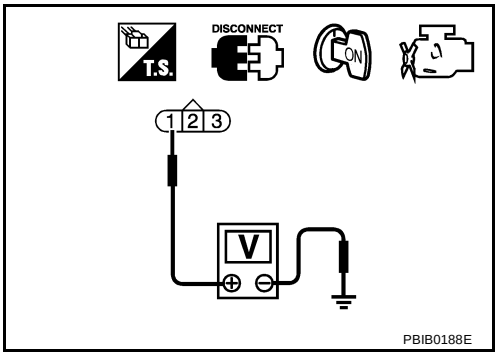

OK or NG

OK >> GO TO 5.
NG >> GO TO 4.

4. DETECT MALFUNCTIONING PART

Check the following.

- Harness connectors E18, F48
- Harness for open or short between ECM and refrigerant pressure sensor

>> Repair open circuit or short to ground or short to power in harness or connectors.

5. CHECK REFRIGERANT PRESSURE SENSOR GROUND CIRCUIT FOR OPEN AND SHORT

1. Turn ignition switch OFF.
2. Disconnect ECM harness connector.
3. Check harness continuity between refrigerant pressure sensor terminal 3 and ECM terminal 67. Refer to Wiring Diagram.

Continuity should exist.

4. Also check harness for short to ground and short to power.

OK or NG

OK >> GO TO 7.
NG >> GO TO 6.

6. DETECT MALFUNCTIONING PART

Check the following.

- Harness connectors E18, F48
- Harness for open or short between ECM and refrigerant pressure sensor

>> Repair open circuit or short to ground or short to power in harness or connectors.

7. CHECK REFRIGERANT PRESSURE SENSOR INPUT SIGNAL CIRCUIT FOR OPEN AND SHORT

1. Check harness continuity between ECM terminal 70 and refrigerant pressure sensor terminal 2. Refer to Wiring Diagram.

   Continuity should exist.

2. Also check harness for short to ground and short to power.

OK or NG

OK >> GO TO 9.
NG >> GO TO 8.

8. DETECT MALFUNCTIONING PART

Check the following.

- Harness connectors E18, F48
- Harness for open or short between ECM and refrigerant pressure sensor

>> Repair open circuit or short to ground or short to power in harness or connectors.

9. CHECK INTERMITTENT INCIDENT

Refer to EC-163, "TROUBLE DIAGNOSIS FOR INTERMITTENT INCIDENT" .

OK or NG

OK >> Replace refrigerant pressure sensor.
NG >> Repair or replace.

Removal and Installation

ABS006YO

REFRIGERANT PRESSURE SENSOR

Refer to ATC-156, "Removal and Installation of Refrigerant Pressure Sensor" .

ELECTRICAL LOAD SIGNAL

PFP:25350

Description

ABS006YP

The electrical load signal (Headlamp switch signal, etc.) is transferred through the CAN communication line from BCM to ECM via IPDM E/R.

CONSULT-II Reference Value in Data Monitor Mode

ABS006YQ

Specification data are reference values.

MONITOR ITEM	CONDITION		SPECIFICATION
LOAD SIGNAL	● Ignition switch: ON	Rear window defogger switch is ON and/or lighting switch is in 2nd.	ON
		Rear window defogger switch is OFF and lighting switch is OFF.	OFF

Diagnostic Procedure

ABS006YR

1. CHECK LOAD SIGNAL CIRCUIT OVERALL FUNCTION-I

1. Turn ignition switch ON.
2. Connect CONSULT-II and select “DATA MONITOR” mode.
3. Select “LOAD SIGNAL” and check indication under the following conditions.

Condition	Indication
Rear window defogger switch: ON	ON
Rear window defogger switch: OFF	OFF

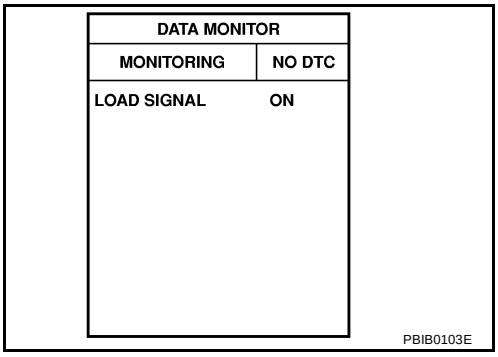

OK or NG

OK >> GO TO 2.
NG >> GO TO 3.

2. CHECK LOAD SIGNAL CIRCUIT OVERALL FUNCTION-II

Check “LOAD SIGNAL” indication under the following conditions.

Condition	Indication
Lighting switch: ON at 2nd position	ON
Lighting switch: OFF	OFF

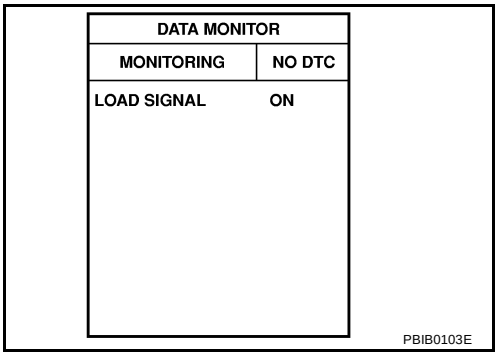

OK or NG

OK >> **INSPECTION END**
NG >> GO TO 4.

3. CHECK REAR WINDOW DEFOGGER SYSTEM

Refer to GW-86, "REAR WINDOW DEFOGGER" .

>> **INSPECTION END**

4. CHECK HEADLAMP SYSTEM

Refer to LT-7, "HEADLAMP - XENON TYPE -" .

>> **INSPECTION END**

ICC BRAKE SWITCH

PFP:25320

Component Description

ABS006YS

When the brake pedal is depressed, ICC brake switch is turned OFF and stop lamp switch is turned ON. ECM detects the state of the brake pedal by this input of two kinds (ON/OFF signal)
Refer to ACS-6, "DESCRIPTION" for the ICC function.

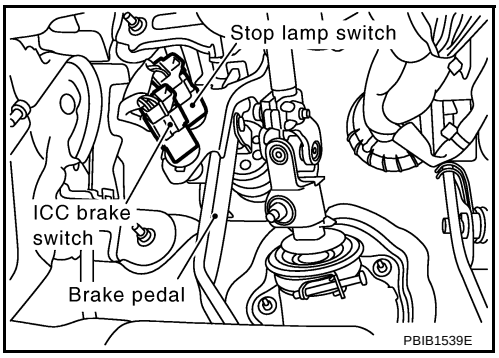

CONSULT-II Reference Value in Data Monitor Mode

ABS006YT

Specification data are reference values.

MONITOR ITEM	CONDITION		SPECIFICATION
BRAKE SW1 (ICC brake switch)	● Ignition switch: ON	● Brake pedal: Fully released	ON
		● Brake pedal: Slightly depressed	OFF
BRAKE SW2 (stop lamp switch)	● Ignition switch: ON	● Brake pedal: Fully released	OFF
		● Brake pedal: Slightly depressed	ON

Wiring Diagram

ABS006YU

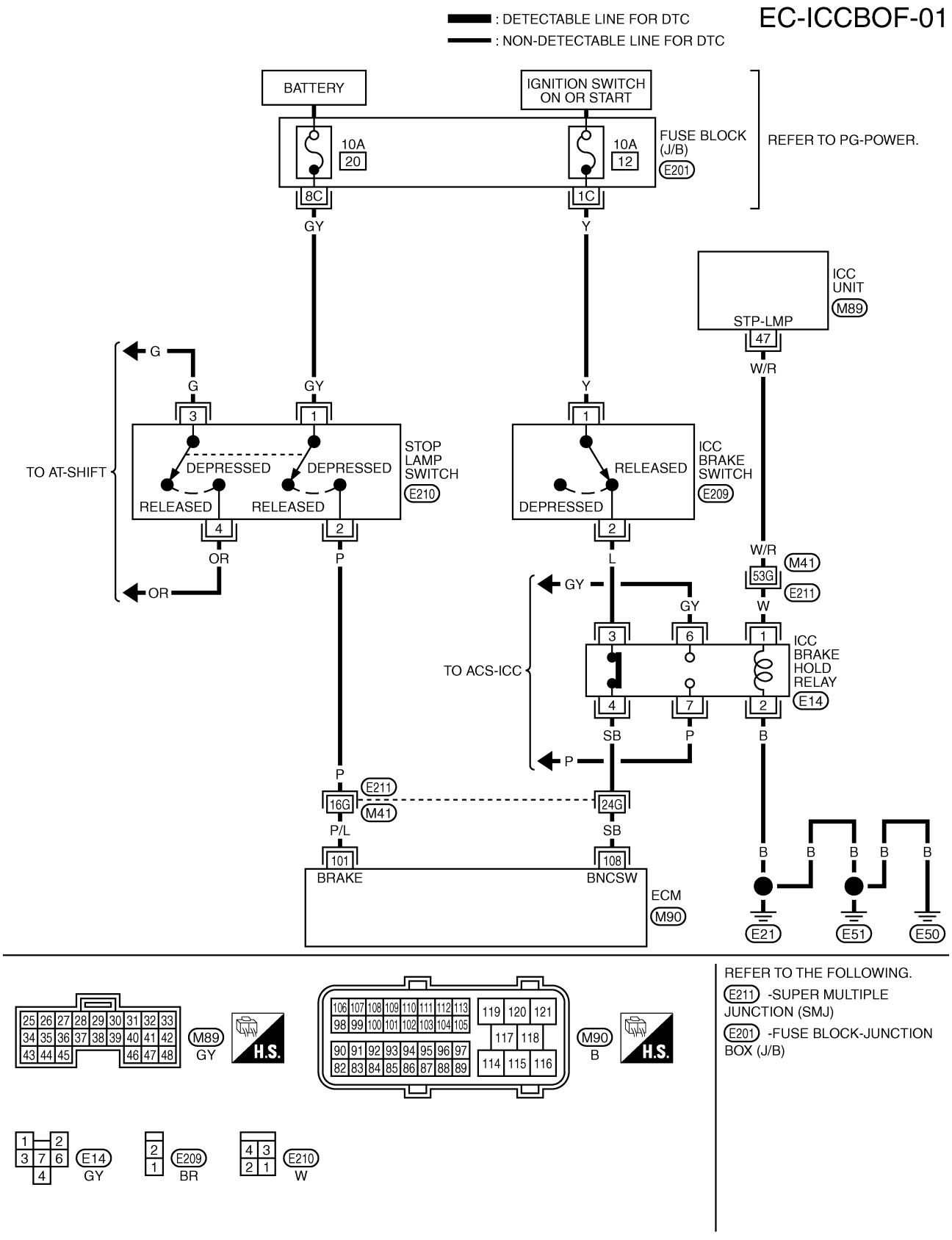

Specification data are reference values and are measured between each terminal and ground.

CAUTION:

Do not use ECM ground terminals when measuring input/output voltage. Doing so may result in damage to the ECM's transistor. Use a ground other than ECM terminals, such as the ground.

TERMINAL NO.	WIRE COLOR	ITEM	CONDITION	DATA (DC Voltage)
101	P/L	Stop lamp switch	**[Ignition switch: OFF]** ● Brake pedal: Fully released	Approximately 0V
			[Ignition switch: OFF] ● Brake pedal: Slightly depressed	BATTERY VOLTAGE (11 - 14V)
108	SB	ICC brake switch	**[Ignition switch: ON]** ● Brake pedal: Slightly depressed	Approximately 0V
			[Ignition switch: ON] ● Brake pedal: Fully released	BATTERY VOLTAGE (11 - 14V)

Diagnostic Procedure

ABS00DC3

1. CHECK OVERALL FUNCTION-I

With CONSULT-II

1. Turn ignition switch ON.
2. Select “BRAKE SW1” in “DATA MONITOR” mode with CONSULT-II.
3. Check “BRAKE SW1” indication under the following conditions.

CONDITION	INDICATION
Brake pedal: Slightly depressed	OFF
Brake pedal: Fully released	ON

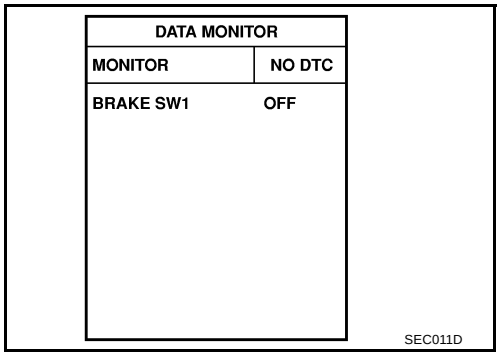

Without CONSULT-II

1. Turn ignition switch ON.
2. Check voltage between ECM terminal 108 and ground under the following conditions.

CONDITION	VOLTAGE
Brake pedal: Slightly depressed	Approximately 0V
Brake pedal: Fully released	Battery voltage

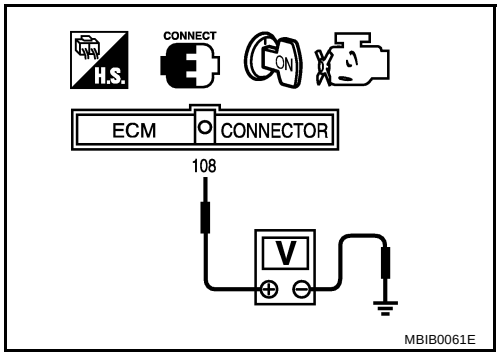

OK or NG

OK >> GO TO 2.
NG >> GO TO 3.

2. CHECK OVERALL FUNCTION-II

With CONSULT-II

Check “BRAKE SW2” indication in “DATA MONITOR” mode.

CONDITION	INDICATION
Brake pedal: Fully released	OFF
Brake pedal: Slightly depressed	ON

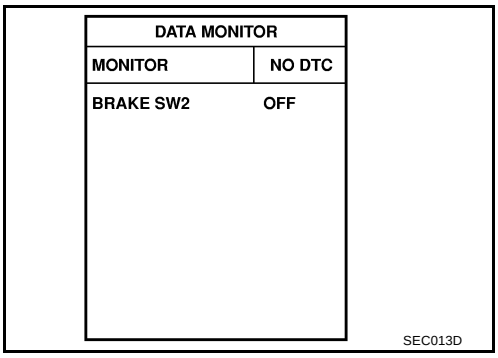

Without CONSULT-II

Check voltage between ECM terminal 101 and ground under the following conditions.

CONDITION	VOLTAGE
Brake pedal: Fully released	Approximately 0V
Brake pedal: Slightly depressed	Battery voltage

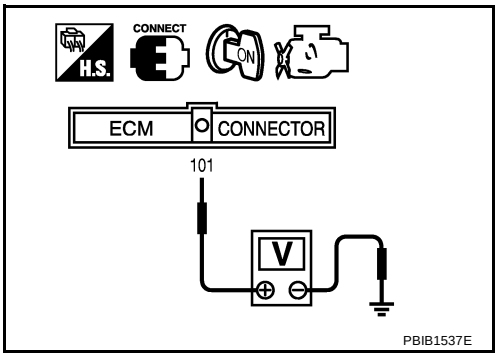

OK or NG

OK >> **INSPECTION END**
NG >> GO TO 12.

3. CHECK DTC WITH ICC UNIT

Refer to ACS-41, "TROUBLE DIAGNOSIS FOR SELF-DIAGNOSTIC ITEMS" .

OK or NG

OK >> GO TO 4.
NG >> Repair or replace.

4. CHECK ICC BRAKE SWITCH CIRCUIT

1. Turn ignition switch OFF.
2. Disconnect ICC brake hold relay.
3. Turn ignition switch ON.

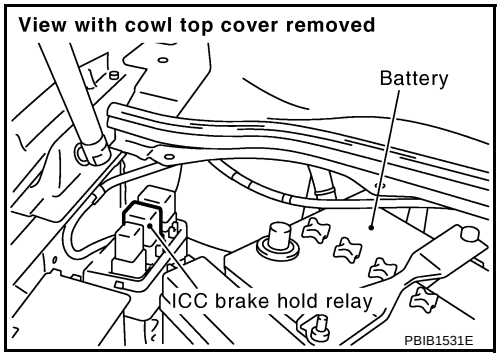

4. Check voltage between ICC brake hold relay terminal 3 and ground with CONSULT-II or tester.

Voltage: Battery voltage

OK or NG

OK >> GO TO 9.
NG >> GO TO 5.

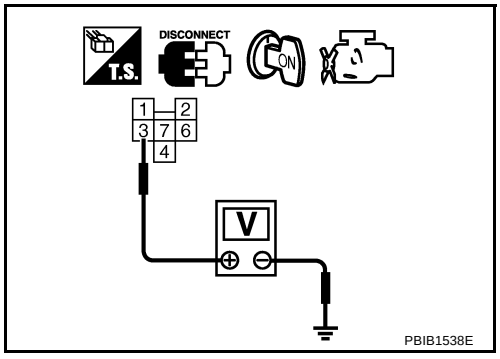

5. CHECK ICC BRAKE SWITCH POWER SUPPLY CIRCUIT

1. Turn ignition switch OFF.
2. Disconnect ICC brake switch harness connector.
3. Turn ignition switch ON.

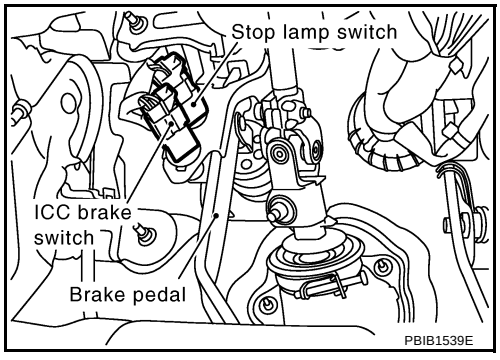

4. Check voltage between ICC brake switch terminal 1 and ground with CONSULT-II or tester.

Voltage: Battery voltage

OK or NG

OK >> GO TO 7.
NG >> GO TO 6.

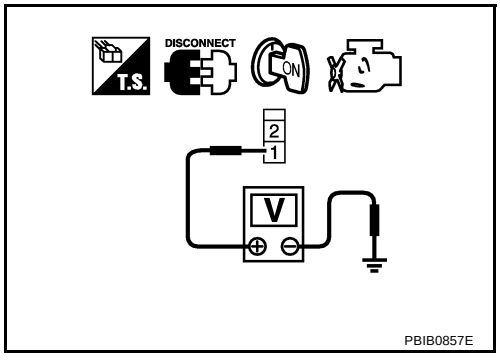

6. DETECT MALFUNCTIONING PART

Check the following.

- Fuse block (J/B) connector E201
- 10A fuse
- Harness for open or short between ICC brake switch and fuse

>> Repair open circuit or short to ground or short to power in harness or connectors.

7. CHECK ICC BRAKE SWITCH INPUT SIGNAL CIRCUIT FOR OPEN AND SHORT-I

1. Turn ignition switch OFF.
2. Check harness continuity between ICC brake hold relay terminal 3 and ICC brake switch terminal 2. Refer to Wiring Diagram.

Continuity should exist.

3. Also check harness for short to ground and short to power.

OK or NG

OK >> GO TO 8.
NG >> Repair open circuit or short to ground or short to power in harness or connectors.

8. CHECK ICC BRAKE SWITCH

Refer to EC-687, "Component Inspection" .

OK or NG

OK >> GO TO 17.
NG >> Replace ICC brake switch.

9. CHECK ICC BRAKE SWITCH INPUT SIGNAL CIRCUIT FOR OPEN AND SHORT-II

1. Turn ignition switch OFF.
2. Disconnect ECM harness connector.
3. Check harness continuity between ICC brake hold relay terminal 4 and ECM terminal 108. Refer Wiring Diagram.

Continuity should exist.

4. Also check harness for short to ground and short to power.

OK or NG

OK >> GO TO 11.
NG >> GO TO 10.

10. DETECT MALFUNCTIONING PART

Check the following.

- Harness connectors E211, M41
- Harness for open or short between ICC brake hold relay and ECM

>> Repair open circuit or short to ground or short to power in harness or connectors.

11. CHECK ICC BRAKE HOLD RELAY

Refer to EC-687, "Component Inspection" .

OK >> GO TO 17.
NG >> Replace ICC brake fold relay.

12. CHECK STOP LAMP SWITCH POWER SUPPLY CIRCUIT

1. Turn ignition switch OFF.
2. Disconnect stop lamp switch harness connector.

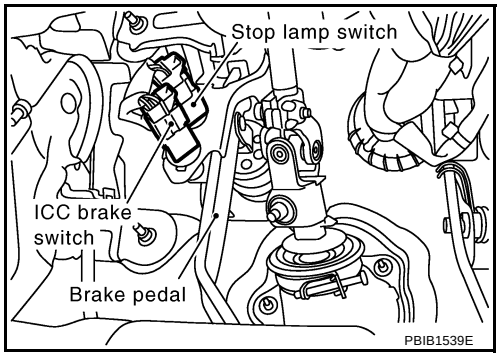

3. Check voltage between stop lamp switch terminal 1 and ground with CONSULT -II or tester.

Voltage: Battery voltage

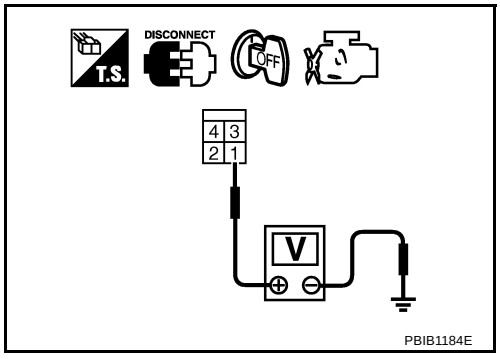

OK or NG

OK >> GO TO 14.
NG >> GO TO 13.

13. DETECT MALFUNCTIONING PART

Check the following.

- Fuse block (J/B) connector E201
- 10A fuse
- Harness for open or short between stop lamp switch and fuse

>> Repair open circuit or short to ground or short to power in harness or connectors.

14. CHECK STOP LAMP SWITCH INPUT SIGNAL CIRCUIT FOR OPEN AND SHORT

1. Disconnect ECM harness connector.
2. Check harness continuity between ECM terminal 101 and stop lamp switch terminal 2. Refer to Wiring Diagram.

Continuity should exist.

3. Also check harness for short to ground and short to power.

OK or NG

OK >> GO TO 16.
NG >> GO TO 15.

15. DETECT MALFUNCTIONING PART

Check the following.

- Harness connectors E211, M41
- Harness for open or short between ECM and stop lamp switch

>> Repair open circuit or short to ground or short to power in harness or connectors.

16. CHECK STOP LAMP SWITCH

Refer to EC-687, "Component Inspection"

OK or NG

OK >> GO TO 17.
NG >> Replace stop lamp switch.

17. CHECK INTERMITTENT INCIDENT

Refer to EC-163, "TROUBLE DIAGNOSIS FOR INTERMITTENT INCIDENT" .

>> **INSPECTION END**

Component Inspection

ABS006YW

ICC BRAKE SWITCH

1. Turn ignition switch OFF.
2. Disconnect ICC brake switch harness connector.
3. Check continuity between ICC brake switch terminals 1 and 2 under the following conditions.

Condition	Continuity
Brake pedal: Fully released.	Should exist.
Brake pedal: Slightly depressed.	Should not exist.

If NG, adjust ICC brake switch installation, refer to BR-6, "BRAKE PEDAL" , and perform step 3 again.

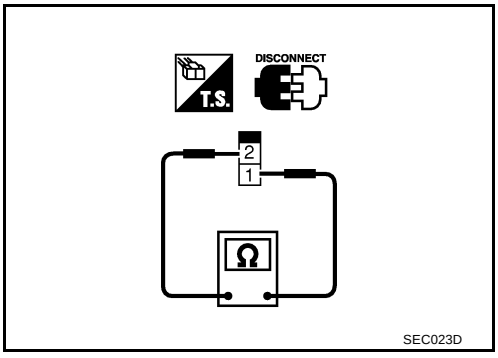

STOP LAMP SWITCH

1. Turn ignition switch OFF.
2. Disconnect stop lamp switch harness connector.
3. Check continuity between stop lamp switch terminals 1 and 2 under the following conditions.

Condition	Continuity
Brake pedal: Fully released.	Should not exist.
Brake pedal: Slightly depressed.	Should exist.

If NG, adjust stop lamp switch installation, refer to BR-6, "BRAKE PEDAL" , and perform step 3 again.

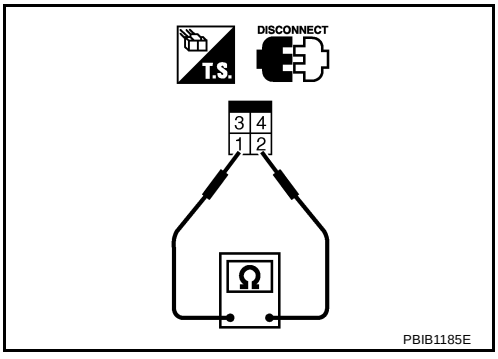

ICC BRAKE HOLD RELAY

1. Apply 12V direct current between ICC brake hold relay terminals 1 and 2.
2. Check continuity between relay terminals 3 and 4, 6 and 7 under the following conditions.

Condition	Between terminals	Continuity
12V direct current supply between terminals 1 and 2	3 and 4	Should not exist
	6 and 7	Should exist
No current supply	3 and 4	Should exist
	6 and 7	Should not exist

3. If NG, replace ICC brake hold relay.

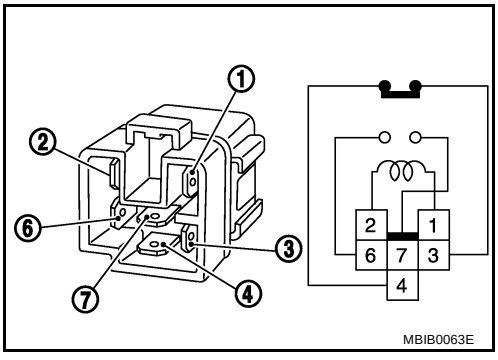

ASCD BRAKE SWITCH

PFP:25320

Component Description

ABS006YX

When the brake pedal is depressed, ASCD brake switch is turned OFF and stop lamp switch is turned ON. ECM detects the state of the brake pedal by this input of two kinds (ON/OFF signal).
Refer to EC-36, "AUTOMATIC SPEED CONTROL DEVICE (ASCD)" for the ASCD function.

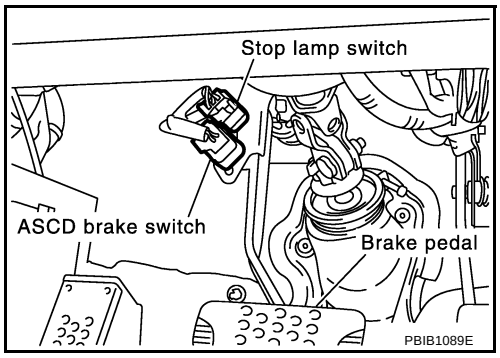

CONSULT-II Reference Value in Data Monitor Mode

ABS006YY

Specification data are reference values.

MONITOR ITEM	CONDITION		SPECIFICATION
BRAKE SW 1 (ASCD brake switch)	● Ignition switch: ON	● Brake pedal: Fully released	ON
		● Brake pedal: Slightly depressed	OFF
BRAKE SW 2 (stop lamp switch)	● Ignition switch: ON	● Brake pedal: Fully released	OFF
		● Brake pedal: Slightly depressed	ON

Wiring Diagram

ABS006YZ

EC-ASCBOF-01

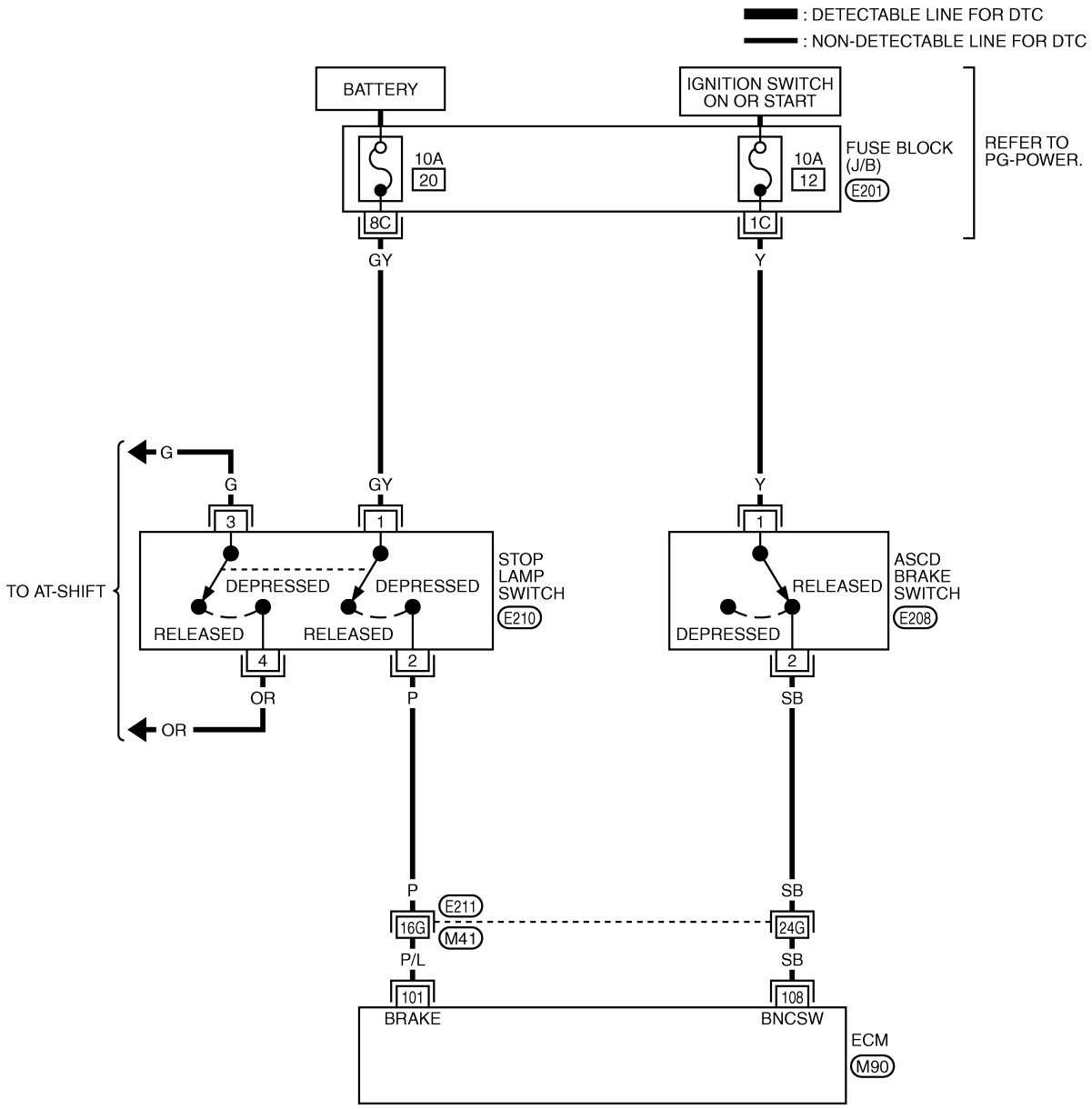

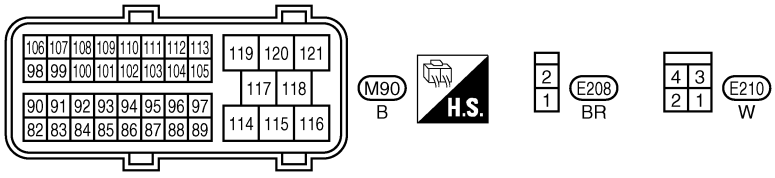

REFER TO THE FOLLOWING.

E211 -SUPER MULTIPLE JUNCTION (SMJ)

E201 -FUSE BLOCK-JUNCTION BOX (J/B)

TBWM0426E

Specification data are reference values and are measured between each terminal and ground.

CAUTION:

Do not use ECM ground terminals when measuring input/output voltage. Doing so may result in damage to the ECM's transistor. Use a ground other than ECM terminals, such as the ground.

TERMINAL NO.	WIRE COLOR	ITEM	CONDITION	DATA (DC Voltage)
101	P/L	Stop lamp switch	**[Ignition switch: OFF]** ● Brake pedal: Fully released	Approximately 0V
			[Ignition switch: OFF] ● Brake pedal: Slightly depressed	BATTERY VOLTAGE (11 - 14V)
108	SB	ASCD brake switch	**[Ignition switch: ON]** ● Brake pedal: Slightly depressed	Approximately 0V
			[Ignition switch: ON] ● Brake pedal: Fully released	BATTERY VOLTAGE (11 - 14V)

Diagnostic Procedure

ABS006Z0

1. CHECK OVERALL FUNCTION-I

With CONSULT-II

1. Turn ignition switch ON.
2. Select “BRAKE SW1” in “DATA MONITOR” mode with CONSULT-II.
3. Check “BRAKE SW1” indication under the following conditions.

CONDITION	INDICATION
Brake pedal: Slightly depressed	OFF
Brake pedal: Fully released	ON

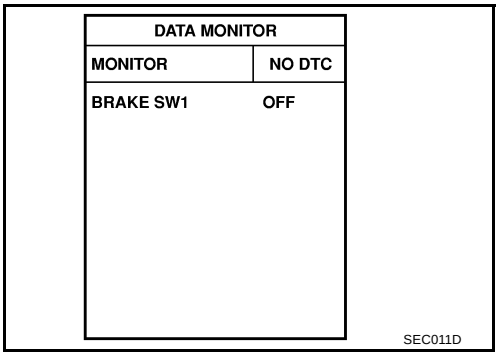

Without CONSULT-II

1. Turn ignition switch ON.
2. Check voltage between ECM terminal 108 and ground under the following conditions.

CONDITION	VOLTAGE
Brake pedal: Slightly depressed	Approximately 0V
Brake pedal: Fully released	Battery voltage

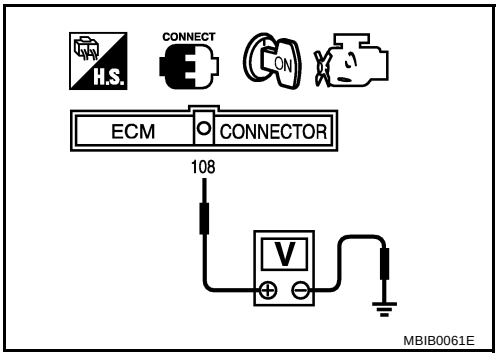

OK or NG

OK >> GO TO 2.
NG >> GO TO 3.

2. CHECK OVERALL FUNCTION-II

With CONSULT-II

Check “BRAKE SW2” indication in “DATA MONITOR” mode.

CONDITION	INDICATION
Brake pedal: Fully released	OFF
Brake pedal: Slightly depressed	ON

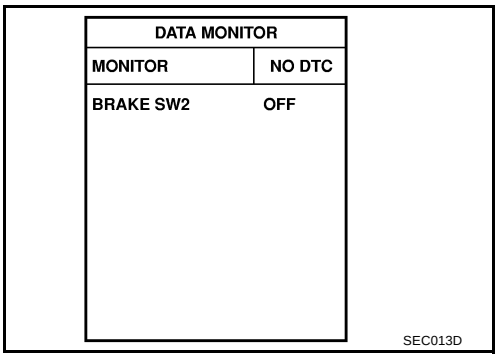

Without CONSULT-II

Check voltage between ECM terminal 101 and ground under the following conditions.

CONDITION	VOLTAGE
Brake pedal: Fully released	Approximately 0V
Brake pedal: Slightly depressed	Battery voltage

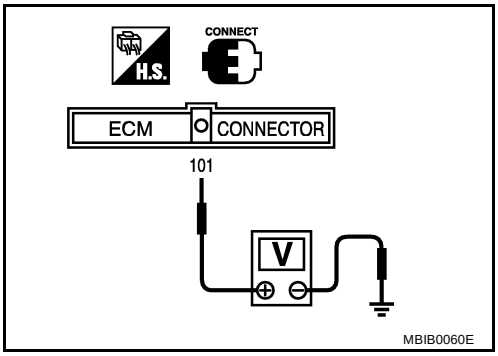

OK or NG

OK >> **INSPECTION END**
NG >> GO TO 8.

3. CHECK ASCD BRAKE SWITCH POWER SUPPLY CIRCUIT

1. Turn ignition switch OFF.
2. Disconnect ASCD brake switch harness connector.
3. Turn ignition switch ON.

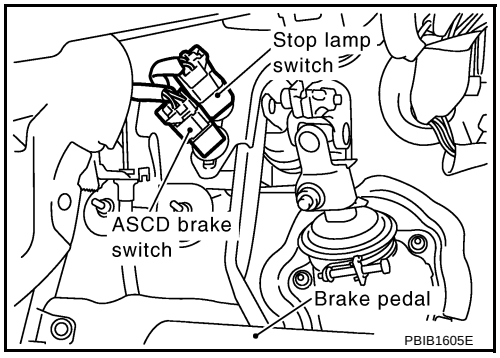

4. Check voltage between ASCD brake switch terminal 1 and ground with CONSULT-II or tester.

Voltage: Battery voltage

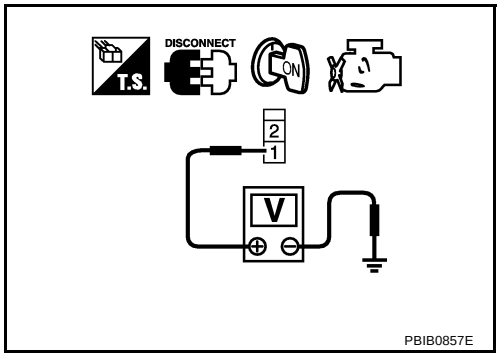

OK or NG

OK >> GO TO 5.
NG >> GO TO 4.

4. DETECT MALFUNCTIONING PART

Check the following.

- Fuse block (J/B) connector E201
- 10A fuse
- Harness for open or short between ASCD brake switch and fuse

>> Repair open circuit or short to ground or short power in harness or connectors.

5. CHECK ASCD BRAKE SWITCH INPUT SIGNAL CIRCUIT FOR OPEN AND SHORT

1. Turn ignition switch OFF.
2. Disconnect ECM harness connector.
3. Check harness continuity between ECM terminal 108 and ASCD brake switch terminal 2. Refer to Wiring Diagram.

Continuity should exist.

4. Also check harness for short to ground and short to power.

OK or NG

OK >> GO TO 7.
NG >> GO TO 6.

6. DETECT MALFUNCTIONING PART

Check the following.

- Harness connectors E211, M41
- Harness for open or short between ECM and ASCD brake switch

>> Repair open circuit or short to ground or short power in harness or connectors.

7. CHECK ASCD BRAKE SWITCH

Refer to EC-694, "Component Inspection"

OK or NG

OK >> GO TO 13.
NG >> Replace ASCD brake switch.

8. CHECK STOP LAMP SWITCH POWER SUPPLY CIRCUIT

1. Turn ignition switch OFF.
2. Disconnect stop lamp switch harness connector.

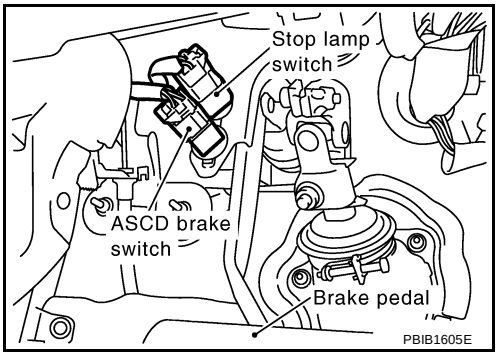

3. Check voltage between stop lamp switch terminal 1 and ground with CONSULT -II or tester.

Voltage: Battery voltage

OK or NG

OK >> GO TO 10.
NG >> GO TO 9.

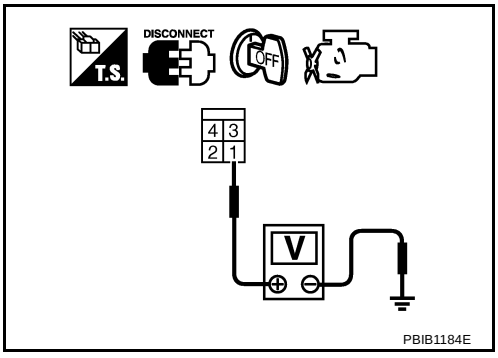

9. DETECT MALFUNCTIONING PART

Check the following.

- Fuse block (J/B) connector E201
- 10A fuse
- Harness for open or short between stop lamp switch and battery

>> Repair open circuit or short to ground or short to power in harness or connectors.

10. CHECK STOP LAMP SWITCH INPUT SIGNAL CIRCUIT FOR OPEN AND SHORT

1. Disconnect ECM harness connector.
2. Check harness continuity between ECM terminal 101 and stop lamp switch terminal 2. Refer to Wiring Diagram.

Continuity should exist.

3. Also check harness for short to ground and short to power.

OK or NG

OK >> GO TO 12.
NG >> GO TO 11.

11. DETECT MALFUNCTIONING PART

Check the following.

- Harness connectors E211, M41
- Harness for open or short between ECM and stop lamp switch

>> Repair open circuit or short to ground or short to power in harness or connectors.

12. CHECK STOP LAMP SWITCH

Refer to EC-694, "Component Inspection"

OK or NG

OK >> GO TO 13.
NG >> Replace stop lamp switch.

13. CHECK INTERMITTENT INCIDENT

Refer to EC-163, "TROUBLE DIAGNOSIS FOR INTERMITTENT INCIDENT" .

>> **INSPECTION END**

Component Inspection

ABS006Z1

ASCD BRAKE SWITCH

1. Turn ignition switch OFF.
2. Disconnect ASCD brake switch harness connector.
3. Check continuity between ASCD brake switch terminals 1 and 2 under the following conditions.

Condition	Continuity
Brake pedal: Fully released.	Should exist.
Brake pedal: Slightly depressed.	Should not exist.

If NG, adjust ASCD brake switch installation, refer to BR-6, "BRAKE PEDAL" , and perform step 3 again.

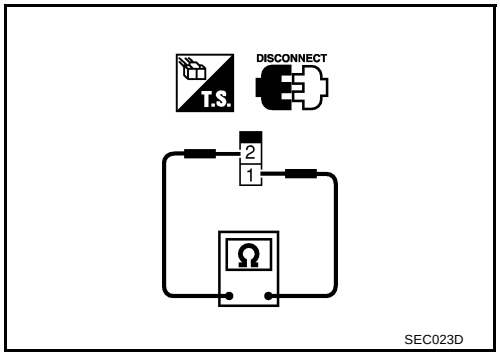

STOP LAMP SWITCH

1. Turn ignition switch OFF.
2. Disconnect stop lamp switch harness connector.
3. Check continuity between stop lamp switch terminals 1 and 2 under the following conditions.

Condition	Continuity
Brake pedal: Fully released.	Should not exist.
Brake pedal: Slightly depressed.	Should exist.

If NG, adjust stop lamp switch installation, refer to BR-6, "BRAKE PEDAL" , and perform step 3 again.

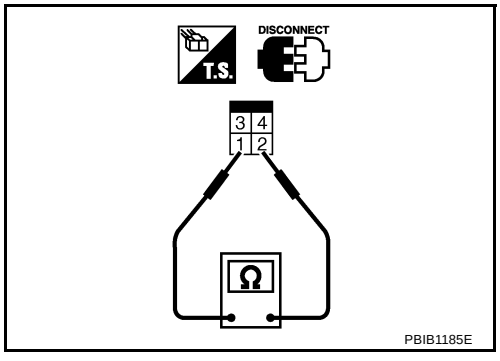

ASCD INDICATOR

PFP:24814

Component Description

ABS006Z2

ASCD indicator lamp illuminates to indicate ASCD operation status. Lamp has two indicators, CRUISE, SET, and is integrated in combination meter.
CRUISE indicator illuminates when MAIN switch on ASCD steering switch is turned ON to indicated that ASCD system is ready for operation.
SET indicator illuminates when following conditions are met.

- CRUISE indicator is illuminated.
- SET/COAST switch on ASCD steering switch is turned ON while vehicle speed is within the range of ASCD setting.

SET indicator remains lit during ASCD control.
Refer to EC-36, "AUTOMATIC SPEED CONTROL DEVICE (ASCD)" for the ASCD function.

CONSULT-II Reference Value in Data Monitor Mode

ABS006Z3

Specification data are reference value.

MONITOR ITEM	CONDITION		SPECIFICATION
CRUISE LAMP	● Ignition switch: ON	● ON/OFF (MAIN) switch: Pressed at the 1st time → at the 2nd time	ON → OFF
SET LAMP	● MAIN switch: ON ● When vehicle speed is between 40km/h (25MPH) and 144km/h (89MPH)	ASCD: Operating	ON
		ASCD: Not operating	OFF

Wiring Diagram

ABS006Z4

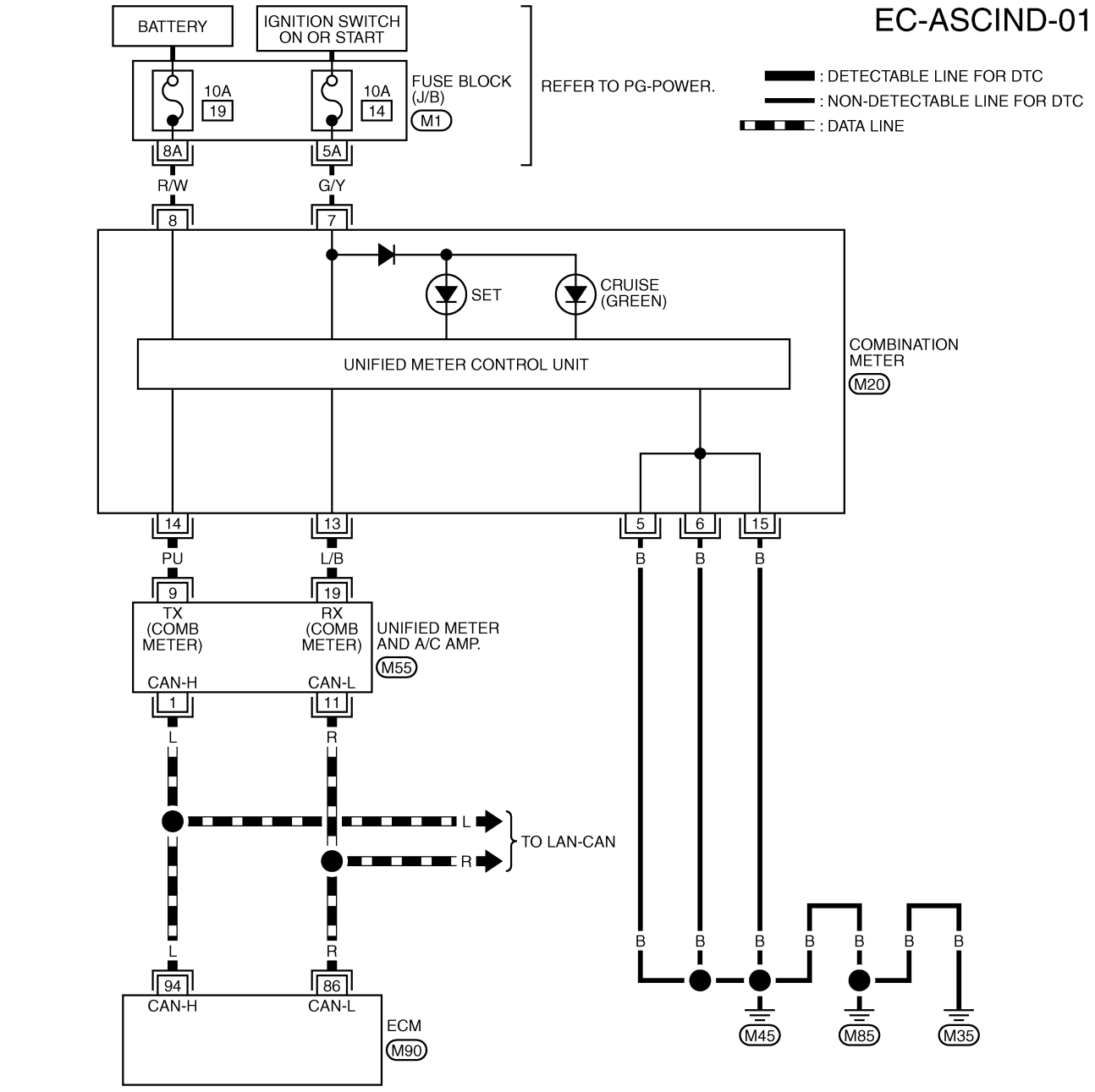

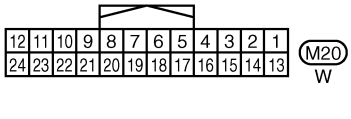

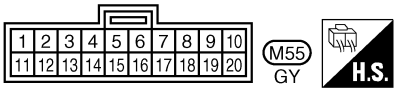

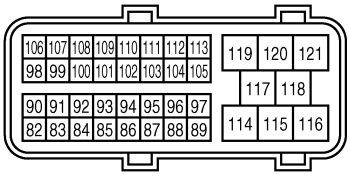

REFER TO THE FOLLOWING.
M1 -FUSE BLOCK-JUNCTION BOX (J/B)

TBWM0267E

Diagnostic Procedure

ABS006Z5

1. CHECK OVERALL FUNCTION

Check ASCD indicator under the following conditions.

ASCD INDICATOR	CONDITION		SPECIFICATION
CRUISE LAMP	● Ignition switch: ON	● MAIN switch: pressed at the 1st time → at the 2nd time	ON → OFF
SET LAMP	● MAIN switch: ON ● When vehicle speed is between 40km/h (25MPH) and 144km/h (89MPH)	ASCD: Operating	ON
		ASCD: Not operating	OFF

OK or NG

OK >> **INSPECTION END**
NG >> GO TO 2.

2. CHECK DTC

Check that DTC U1000 or U1001 is not displayed.

OK or NG

OK >> GO TO 3.
NG >> Perform trouble diagnoses for DTC U1000, U1001. Refer to EC-171, "DTC U1000, U1001 CAN COMMUNICATION LINE" .

3. CHECK DTC WITH “UNIFIED METER AND A/C AMP.”

Refer to DI-32, "SELF-DIAGNOSTIC RESULTS" .

OK or NG

OK >> GO TO 4.
NG >> Go to DI-34, "DTC [B2202] Meter Communication Circuit" .

4. CHECK INTERMITTENT INCIDENT

Refer to EC-163, "TROUBLE DIAGNOSIS FOR INTERMITTENT INCIDENT" .

>> **INSPECTION END**

SNOW MODE SWITCH

PFP:25310

Description

ABS00A2B

NOTE:
If DTC U1000 or U1001 are displayed, first perform the trouble diagnosis for DTC U1000, U1001.
Refer to EC-171, "DTC U1000, U1001 CAN COMMUNICATION LINE" .
The snow mode switch signal is sent to the “unified meter and A/C amp.” from the snow mode switch. The “unified meter and A/C amp.” then sends the signal to the ECM by CAN communication line.
The snow mode is used for driving or starting the vehicle on snowy roads or slippery areas. If the snow mode is activated, the vehicle speed will not be accelerated immediately than your original pedal in due to avoid the vehicle slip. In other words, ECM controls the rapid engine torque change by controlling the electric throttle control actuator operating speed.

CONSULT-II Reference Value in the Data Monitor Mode

ABS00A2C

MONITOR ITEM	CONDITION		SPECIFICATION
SNOW MODE SW	● Ignition switch: ON	SNOW MODE SW: ON	ON
		SNOW MODE SW: OFF	OFF

Wiring Diagram

ABS00A2D

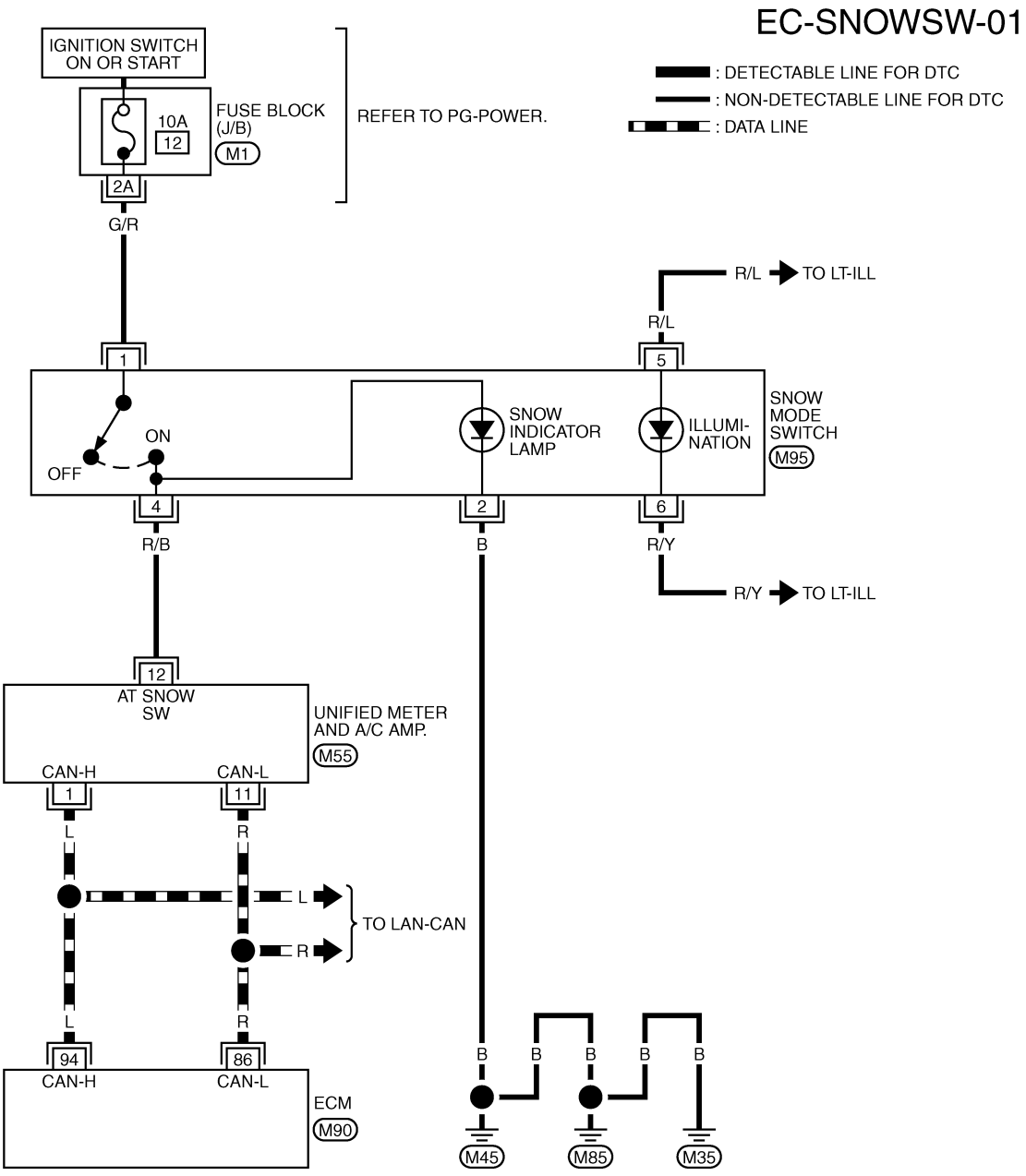

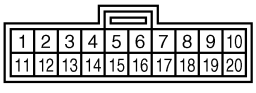

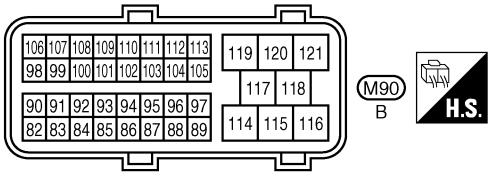

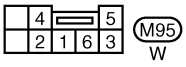

REFER TO THE FOLLOWING.
M1 -FUSE BLOCK-JUNCTION BOX (J/B)

TBWM0738E

Diagnostic Procedure

ABS00E9B

1. CHECK SNOW MODE SWITCH OVERALL FUNCTION-I

1. Turn ignition switch ON.
2. Select “SNOW MODE SW” in “DATA MONITOR” mode with CONSULT-II.
3. Check “SNOW MODE SW” indication under the following conditions.

CONDITION	INDICATION
Snow mode switch: ON	ON
Snow mode switch: OFF	OFF

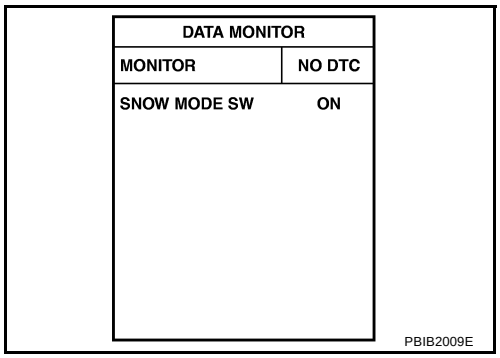

OK or NG

OK >> GO TO 2.
NG >> GO TO 3.

2. CHECK SNOW MODE SWITCH OVERALL FUNCTION-II

1. Turn ignition switch ON.
2. Start engine.
3. Check the snow mode indicator in the snow mode switch under the following condition.

CONDITION	INDICATION
Snow mode switch: ON	ON
Snow mode switch: OFF	OFF

OK or NG

OK >> **INSPECTION END**
NG >> GO TO 7.

3. CHECK DTC WITH “UNIFIED METER AND A/C AMP.”

Refer to DI-32, "SELF-DIAGNOSTIC RESULTS" .

OK or NG

OK >> GO TO 4.
NG >> Go to DI-28, "UNIFIED METER AND A/C AMP" .

4. CHECK SNOW MODE SWITCH POWER SUPPLY CIRCUIT

1. Turn ignition switch OFF.
2. Disconnect snow mode switch harness connector.
3. Turn ignition switch ON.
4. Check voltage between snow mode switch terminal 1 and ground with CONSULT-II or tester.

Voltage: Battery voltage.

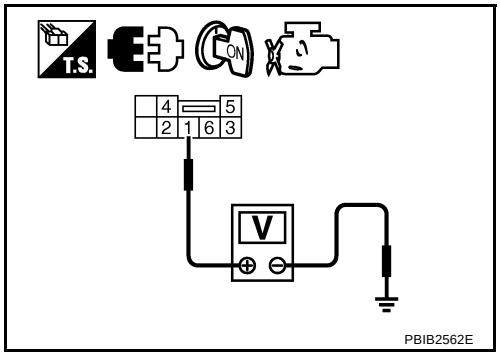

OK or NG

OK >> GO TO 6.
NG >> GO TO 5.

5. DETECT MALFUNCTIONING PART

Check the following.

- Fuse block (J/B) M1
- 10A fuse
- Harness for open or short between snow mode switch and fuse.

>> Repair open circuit or short to ground or short to power in harness or connectors.

6. CHECK SNOW MODE SWITCH INPUT SIGNAL CIRCUIT FOR OPEN AND SHORT

1. Turn ignition switch OFF.
2. Disconnect “unified meter and A/C amp.” harness connector.
3. Check harness continuity between snow mode switch terminal 4 and “unified meter and A/C amp.” terminal 12. Refer to Wiring Diagram.

Continuity should exist.

4. Also check harness for short to ground and short to power.

OK or NG

OK >> GO TO 9.
NG >> Repair open circuit or short to ground or short to power in harness or connectors.

7. CHECK GROUND CONNECTIONS

1. Turn ignition switch OFF.
2. Loosen and retighten three ground screws on the body.
Refer to EC-861, "Ground Inspection" .

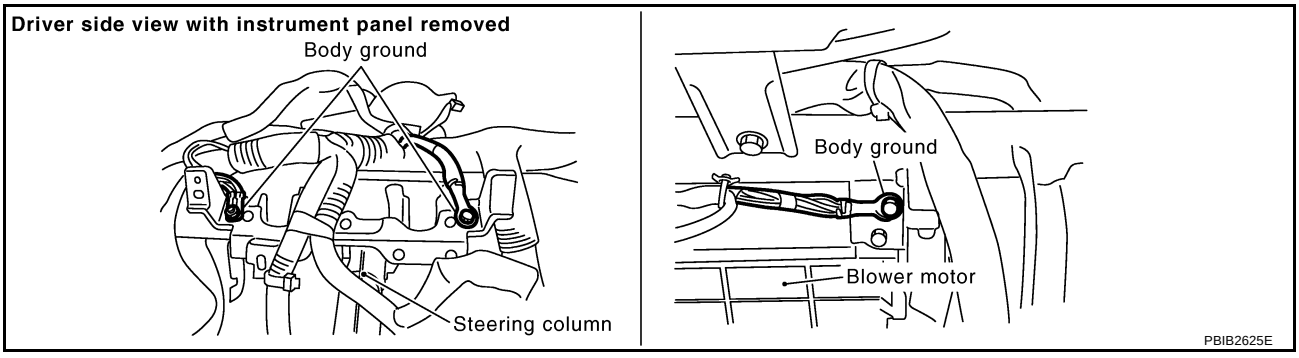

OK or NG

OK >> GO TO 8.
NG >> Repair or replace ground connections.

8. CHECK SNOW MODE INDICATOR LAMP GROUND CIRCUIT FOR OPEN AND SHORT

1. Check harness continuity between snow mode switch terminal 2 and ground.
Refer to Wiring Diagram.

Continuity should exist.

2. Also check harness for short to power.

OK or NG

OK >> GO TO 9.
NG >> Repair open circuit or short to power in harness or connectors.

9. CHECK SNOW MODE SWITCH

Refer to EC-1392, "Component Inspection" .

OK or NG

OK >> GO TO 10.
NG >> Replace snow mode switch.

10. CHECK INTERMITTENT INCIDENT

Refer to EC-854, "TROUBLE DIAGNOSIS FOR INTERMITTENT INCIDENT" .

>> **INSPECTION END**

Component Inspection

ABS00A2P

SNOW MODE SWITCH

1. Check continuity between snow mode switch terminals 1 and 4 under the following conditions.

CONDITION	CONTINUITY
Snow mode switch: ON	Should exist
Snow mode switch: OFF	Should not exist

2. If NG, replace snow mode switch.
   If OK, go to following step.

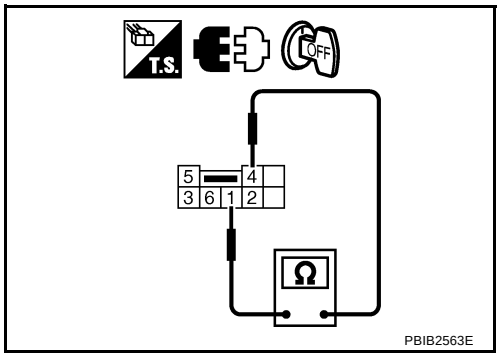

3. Check continuity between snow mode switch terminals 2 and 4 under the following conditions.

CONDITION	CONTINUITY
1	Should exist.
2	Should not exist.

4. If NG, replace snow mode switch.

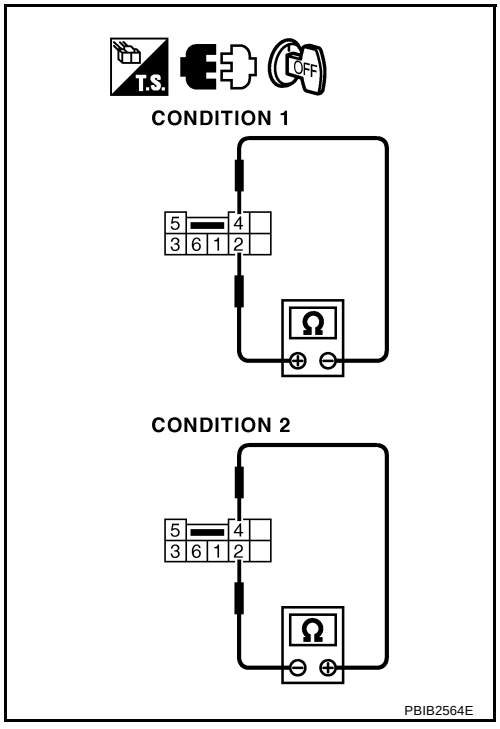

MIL AND DATA LINK CONNECTOR

PFP:24814

Wiring Diagram

ABS006Z6

EC-MIL/DL-01

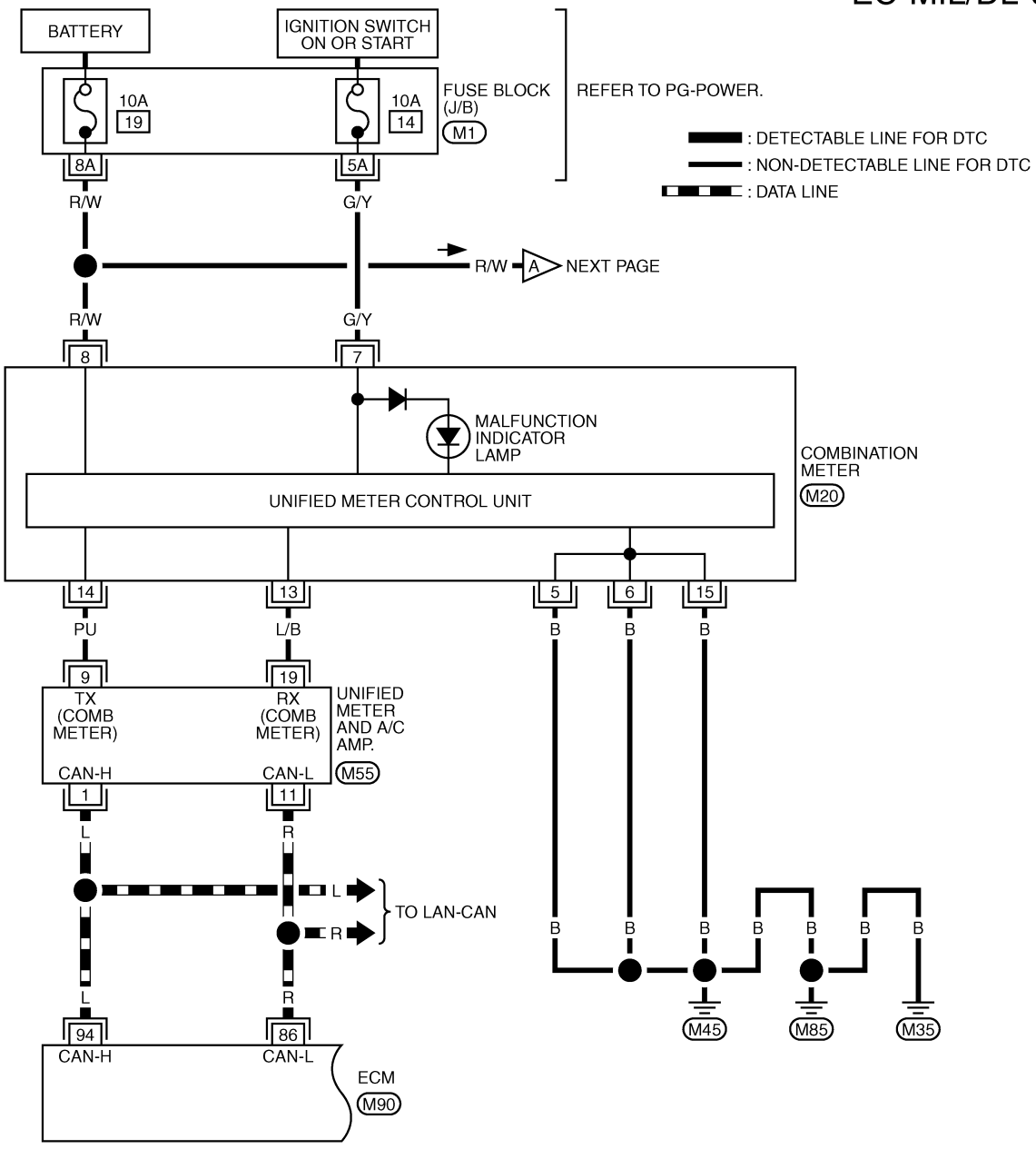

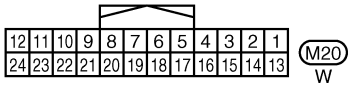

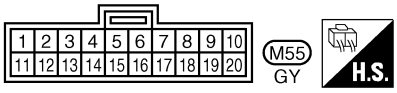

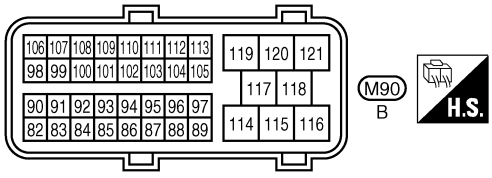

REFER TO THE FOLLOWING.
M1 -FUSE BLOCK-JUNCTION BOX (J/B)

TBWM0268E

EC-MIL/DL-02

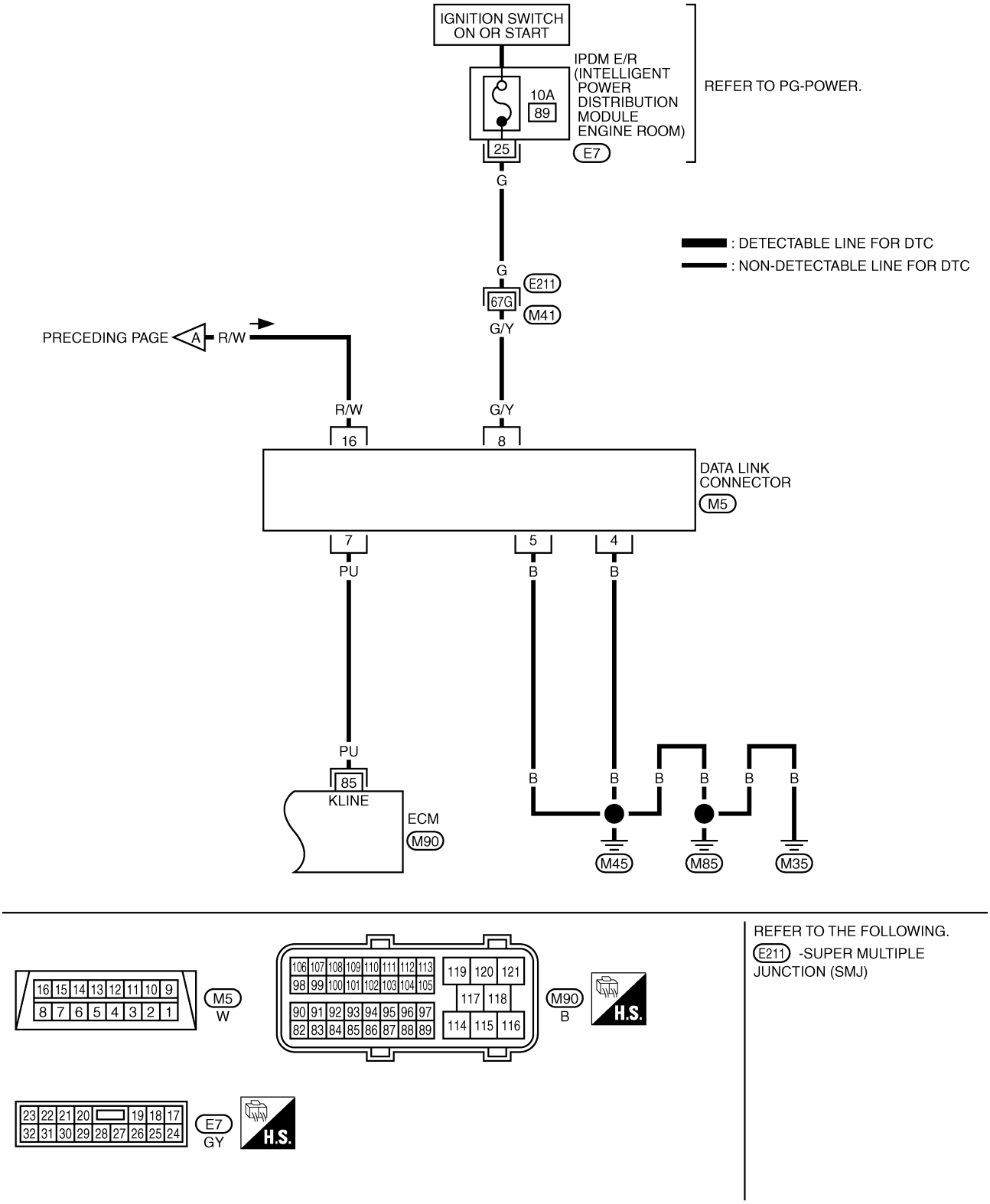
IGNITION SWITCH ON OR START
IPDM E/R (INTELLIGENT POWER DISTRIBUTION MODULE ENGINE ROOM)
10A
89
25
E7
REFER TO PG-POWER.
G
: DETECTABLE LINE FOR DTC
: NON-DETECTABLE LINE FOR DTC
E211
67G
M41
G/Y
PRECEDING PAGE
A
R/W
16
8
DATA LINK CONNECTOR
M5
7
5
4
PU
B
85
KLINE
ECM
M90
M45
M85
M35
M5
W
M90
B
H.S.
E7
GY
REFER TO THE FOLLOWING.
E211 -SUPER MULTIPLE JUNCTION (SMJ)
TBWM0269E

SERVICE DATA AND SPECIFICATIONS (SDS)

PFP:00030

Fuel Pressure

ABS006ZI

Fuel pressure at idling kPa (kg/cm^2 , psi)	Approximately 350 (3.57, 51)

Idle Speed and Ignition Timing

ABS006ZJ

Target idle speed	No-load*1 (in P or N position)	650±50 rpm
Air conditioner: ON	In P or N position	700 rpm or more
Ignition timing	In P or N position	15° ± 5° BTDC

*1: Under the following conditions:

- Air conditioner switch: OFF
- Electric load: OFF (Lights, heater fan & rear window defogger)
- Steering wheel: Kept in straight-ahead position

Calculated Load Value

ABS006ZK

	Calculated load value% (Using CONSULT-II or GST)
At idle	5 - 35
At 2,500 rpm	5 - 35

Mass Air Flow Sensor

ABS006ZL

Supply voltage	Battery voltage (11 - 14V)
Output voltage at idle	1.0 - 1.2*V
Mass air flow (Using CONSULT-II or GST)	2.0 - 6.0 g·m/sec at idle* 7.0 - 20.0 g·m/sec at 2,500 rpm*

*: Engine is warmed up to normal operating temperature and running under no-load.

Intake Air Temperature Sensor

ABS006ZM

Temperature °C (°F)	Resistance kΩ
25 (77)	1.94 - 2.06
80 (176)	0.295 - 0.349

Engine Coolant Temperature Sensor

ABS006ZN

Temperature °C (°F)	Resistance kΩ
20 (68)	2.1 - 2.9
50 (122)	0.68 - 1.00
90 (194)	0.236 - 0.260

Air Fuel Ratio (A/F) Sensor 1 Heater

ABS006ZO

Resistance [at 25°C (77°F)]	2.3 - 4.3Ω

Heated Oxygen sensor 2 Heater

ABS006ZP

Resistance [at 25°C (77°F)]	5.0 - 7.0Ω

Crankshaft Position Sensor (POS)

ABS006ZQ

Refer to EC-306, "Component Inspection" .

Camshaft Position Sensor (PHASE)

ABS006ZR

Refer to EC-315, "Component Inspection" .

Throttle Control Motor

ABS006ZS

Resistance [at 25°C (77°F)]	Approximately 1 - 15Ω

Injector

ABS006ZT

Resistance [at 10 - 60°C (50 - 140°F)]	13.5 - 17.5Ω

Fuel Pump

ABS006ZU

Resistance [at 25°C (77°F)]	0.2 - 5.0Ω

INDEX FOR DTC

PFP:00024

DTC No. Index

ABS00E3V

NOTE:
If DTC U1000 or U1001 is displayed with other DTC, first perform the trouble diagnosis for DTC U1000, U1001. Refer to EC-862, "DTC U1000, U1001 CAN COMMUNICATION LINE" .

DTC*1		Items (CONSULT-II screen terms)	Reference page
CONSULT-II GST*2	ECM*3		
No DTC	Flashing*4	NO DTC IS DETECTED. FURTHER TESTING MAY BE REQUIRED.	EC-761
U1000	1000*5	CAN COMM CIRCUIT	EC-862
U1001	1001*5	CAN COMM CIRCUIT	EC-862
P0000	**0000**	**NO DTC IS DETECTED. FURTHER TESTING MAY BE REQUIRED.**	**—**
P0011	0011	INT/V TIM CONT-B1	EC-865
P0021	0021	INT/V TIM CONT-B2	EC-865
P0031	0031	HO2S1 HTR (B1)	EC-877
P0032	0032	HO2S1 HTR (B1)	EC-877
P0037	0037	HO2S2 HTR (B1)	EC-885
P0038	0038	HO2S2 HTR (B1)	EC-885
P0051	0051	HO2S1 HTR (B2)	EC-877
P0052	0052	HO2S1 HTR (B2)	EC-877
P0057	0057	HO2S2 HTR (B2)	EC-885
P0058	0058	HO2S2 HTR (B2)	EC-885
P0101	0101	MAF SEN/CIRCUIT	EC-893
P0102	0102	MAF SEN/CIRCUIT	EC-902
P0103	0103	MAF SEN/CIRCUIT	EC-902
P0112	0112	IAT SEN/CIRCUIT	EC-909
P0113	0113	IAT SEN/CIRCUIT	EC-909
P0117	0117	ECT SEN/CIRCUIT	EC-914
P0118	0118	ECT SEN/CIRCUIT	EC-914
P0122	0122	TP SEN2/CIRC	EC-920
P0123	0123	TP SEN2/CIRC	EC-920
P0125	0125	ECT SENSOR	EC-927
P0127	0127	IAT SENSOR	EC-930
P0128	0128	THERMSTAT FNCTN	EC-933
P0132	0132	HO2S1 (B1)	EC-935
P0133	0133	HO2S1 (B1)	EC-944
P0134	0134	HO2S1 (B1)	EC-956
P0138	0138	HO2S2 (B1)	EC-966
P0139	0139	HO2S2 (B1)	EC-975
P0152	0152	HO2S1 (B2)	EC-935
P0153	0153	HO2S1 (B2)	EC-944
P0154	0154	HO2S1 (B2)	EC-956

DTC*1		Items (CONSULT-II screen terms)	Reference page
CONSULT-II GST*2	ECM*3		
P0158	0158	HO2S2 (B2)	EC-966
P0159	0159	HO2S2 (B2)	EC-975
P0171	0171	FUEL SYS-LEAN-B1	EC-986
P0172	0172	FUEL SYS-RICH-B1	EC-995
P0174	0174	FUEL SYS-LEAN-B2	EC-986
P0175	0175	FUEL SYS-RICH-B2	EC-995
P0181	0181	FTT SENSOR	EC-1004
P0182	0182	FTT SEN/CIRCUIT	EC-1010
P0183	0183	FTT SEN/CIRCUIT	EC-1010
P0222	0222	TP SEN 1/CIRC	EC-1015
P0223	0223	TP SEN 1/CIRC	EC-1015
P0300	0300	MULTI CYL MISFIRE	EC-1022
P0301	0301	CYL 1 MISFIRE	EC-1022
P0302	0302	CYL 2 MISFIRE	EC-1022
P0303	0303	CYL 3 MISFIRE	EC-1022
P0304	0304	CYL 4 MISFIRE	EC-1022
P0305	0305	CYL 5 MISFIRE	EC-1022
P0306	0306	CYL 6 MISFIRE	EC-1022
P0307	0307	CYL 7 MISFIRE	EC-1022
P0308	0308	CYL 8 MISFIRE	EC-1022
P0327	0327	KNOCK SEN/CIRC-B1	EC-1031
P0328	0328	KNOCK SEN/CIRC-B1	EC-1031
P0332	0332	KNOCK SEN/CIRC-B2	EC-1031
P0333	0333	KNOCK SEN/CIRC-B2	EC-1031
P0335	0335	CKP SEN/CIRCUIT	EC-1036
P0340	0340	CMP SEN/CIRC-B1	EC-1043
P0420	0420	TW CATALYST SYS-B1	EC-1050
P0430	0430	TW CATALYST SYS-B2	EC-1050
P0441	0441	EVAP PURG FLOW/MON	EC-1056
P0442	0442	EVAP SMALL LEAK	EC-1061
P0444	0444	PURG VOLUME CONT/V	EC-1069
P0445	0445	PURG VOLUME CONT/V	EC-1069
P0447	0447	VENT CONTROL VALVE	EC-1076
P0451	0451	EVAP SYS PRES SEN	EC-1083
P0452	0452	EVAP SYS PRES SEN	EC-1086
P0453	0453	EVAP SYS PRES SEN	EC-1092
P0455	0455	EVAP GROSS LEAK	EC-1100
P0456	0456	EVAP VERY SML LEAK	EC-1108
P0460	0460	FUEL LEV SEN SLOSH	EC-1117
P0461	0461	FUEL LEVEL SENSOR	EC-1119
P0462	0462	FUEL LEVL SEN/CIRC	EC-1121
P0463	0463	FUEL LEVL SEN/CIRC	EC-1121

DTC*1		Items (CONSULT-II screen terms)	Reference page
CONSULT-II GST*2	ECM*3		
P0500	0500	VEH SPEED SEN/CIRC*6	EC-1123
P0506	0506	ISC SYSTEM	EC-1125
P0507	0507	ISC SYSTEM	EC-1127
P0550	0550	PW ST P SEN/CIRC	EC-1129
P0605	0605	ECM	EC-1134
P0700	0700	TCM	AT-113
P0705	0705	PNP SW/CIRC	AT-114
P0710	0710	ATF TEMP SEN/CIRC	AT-136
P0720	0720	VEH SPD SEN/CIR AT*6	AT-118
P0740	0740	TCC SOLENOID/CIRC	AT-125
P0744	0744	A/T TCC S/V FNCTN	AT-127
P0745	0745	L/PRESS SOL/CIRC	AT-129
P1065	1065	ECM BACK UP/CIRCUIT	EC-1137
P1111	1111	INT/V TIM V/CIR-B1	EC-1141
P1121	1121	ETC ACTR	EC-1148
P1122	1122	ETC FUNCTION/CIRC	EC-1150
P1124	1124	ETC MOT PWR	EC-1156
P1126	1126	ETC MOT PWR	EC-1156
P1128	1128	ETC MOT	EC-1161
P1136	1136	INT/V TIM V/CIR-B2	EC-1141
P1140	1140	INTK TIM S/CIRC-B1	EC-1166
P1143	1143	HO2S1 (B1)	EC-1174
P1144	1144	HO2S1 (B1)	EC-1180
P1145	1145	INTK TIM S/CIRC-B2	EC-1166
P1146	1146	HO2S2 (B1)	EC-1187
P1147	1147	HO2S2 (B1)	EC-1198
P1148	1148	CLOSED LOOP-B1	EC-1209
P1163	1163	HO2S1 (B2)	EC-1174
P1164	1164	HO2S1 (B2)	EC-1180
P1166	1166	HO2S2 (B2)	EC-1187
P1167	1167	HO2S2 (B2)	EC-1198
P1168	1168	CLOSED LOOP-B2	EC-1209
P1211	1211	TCS C/U FUNCTN	EC-1211
P1212	1212	TCS/CIRC	EC-1212
P1217	1217	ENG OVER TEMP	EC-1213
P1225	1225	CTP LEARNING	EC-1225
P1226	1226	CTP LEARNING	EC-1227
P1229	1229	SENSOR POWER/CIRC	EC-1229
P1444	1444	PURG VOLUME CONT/V	EC-1233
P1446	1446	VENT CONTROL VALVE	EC-1241
P1564	1564	ASCD SW	EC-1247 (Models with ICC) EC-1254 (Models with ASCD)

DTC*1		Items (CONSULT-II screen terms)	Reference page
CONSULT-II GST*2	ECM*3		
P1568	1568	ACC COMMAND VALUE*7	EC-1261
P1572	1572	ASCD BRAKE SW	EC-1262 (Models with ICC) EC-1271 (Models with ASCD)
P1574	1574	ASCD VHL SPD SEN	EC-1279 (Models with ICC) EC-1281 (Models with ASCD)
P1610 - P1615	1610 - 1615	NATS MALFUNCTION	EC-744
P1706	1706	P-N POS SW/CIRCUIT	EC-1283
P1716	1716	TURBINE REV S/CIRC	AT-141
P1720	1720	V/SP SEN(A/T OUT)	EC-1288
P1730	1730	A/T INTERLOCK	AT-145
P1752	1752	I/C SOLENOID/CIRC	AT-150
P1754	1754	I/C SOLENOID FNCTN	AT-152
P1757	1757	FR/B SOLENOID/CIRC	AT-154
P1759	1759	FR/B SOLENOID FNCT	AT-156
P1762	1762	D/C SOLENOID/CIRC	AT-158
P1764	1764	D/C SOLENOID FNCTN	AT-160
P1767	1767	HLR/C SOL/CIRC	AT-162
P1769	1769	HLR/C SOL FNCTN	AT-164
P1772	1772	LC/B SOLENOID/CIRC	AT-166
P1774	1774	LC/B SOLENOID FNCT	AT-168
P1780	1780	SHIFT SIG FNCTN	EC-1290
P1800	1800	VIAS S/V CIRC	EC-1292
P1805	1805	BRAKE SW/CIRCUIT	EC-1297
P2122	2122	APP SEN 1/CIRC	EC-1302
P2123	2123	APP SEN 1/CIRC	EC-1302
P2127	2127	APP SEN 2/CIRC	EC-1309
P2128	2128	APP SEN 2/CIRC	EC-1309
P2135	2135	TP SENSOR	EC-1316
P2138	2138	APP SENSOR	EC-1323

*1: 1st trip DTC No. is the same as DTC No.
*2: This number is prescribed by SAE J2012.
*3: In Diagnostic Test Mode II (Self-diagnostic results), this number is controlled by NISSAN.
*4: When engine is running.
*5: The troubleshooting for this DTC needs CONSULT-II.
*6: When the fail-safe operations for both self-diagnoses occur at the same time, the MIL illuminates.
*7: Models with ICC.

Alphabetical Index

ABS00E3W

NOTE:
If DTC U1000 or U1001 is displayed with other DTC, first perform the trouble diagnosis for DTC U1000, U1001. Refer to EC-862, "DTC U1000, U1001 CAN COMMUNICATION LINE" .

Items (CONSULT-II screen terms)	DTC*1		Reference page
	CONSULT-II GST*2	ECM*3	
A/T INTERLOCK	P1730	1730	AT-145
A/T TCC S/V FNCTN	P0744	0744	AT-127
ACC COMMAND VALUE*7	P1568	1568	EC-1261
APP SEN 1/CIRC	P2122	2122	EC-1302
APP SEN 1/CIRC	P2123	2123	EC-1302
APP SEN 2/CIRC	P2127	2127	EC-1309
APP SEN 2/CIRC	P2128	2128	EC-1309
APP SENSOR	P2138	2138	EC-1323
ASCD BRAKE SW	P1572	1572	EC-1262 (Models with ICC) EC-1271 (Models with ASCD)
ASCD SW	P1564	1564	EC-1247 (Models with ICC) EC-1254 (Models with ASCD)
ASCD VHL SPD SEN	P1574	1574	EC-1279 (Models with ICC) EC-1281 (Models with ASCD)
ATF TEMP SEN/CIRC	P0710	0710	AT-136
BRAKE SW/CIRCUIT	P1805	1805	EC-1297
CAN COMM CIRCUIT	U1000	1000*5	EC-862
CAN COMM CIRCUIT	U1001	1001*5	EC-862
CKP SEN/CIRCUIT	P0335	0335	EC-1036
CLOSED LOOP-B1	P1148	1148	EC-1209
CLOSED LOOP-B2	P1168	1168	EC-1209
CMP SEN/CIRC-B1	P0340	0340	EC-1043
CTP LEARNING	P1225	1225	EC-1225
CTP LEARNING	P1226	1226	EC-1227
CYL 1 MISFIRE	P0301	0301	EC-1022
CYL 2 MISFIRE	P0302	0302	EC-1022
CYL 3 MISFIRE	P0303	0303	EC-1022
CYL 4 MISFIRE	P0304	0304	EC-1022
CYL 5 MISFIRE	P0305	0305	EC-1022
CYL 6 MISFIRE	P0306	0306	EC-1022
CYL 7 MISFIRE	P0307	0307	EC-1022
CYL 8 MISFIRE	P0308	0308	EC-1022
D/C SOLENOID FNCTN	P1764	1764	AT-160
D/C SOLENOID/CIRC	P1762	1762	AT-158
ECM	P0605	0605	EC-1134
ECM BACK UP/CIRCUIT	P1065	1065	EC-1137
ECT SEN/CIRCUIT	P0117	0117	EC-914
ECT SEN/CIRCUIT	P0118	0118	EC-914
ECT SENSOR	P0125	0125	EC-927

Items (CONSULT-II screen terms)	DTC*1		Reference page
	CONSULT-II GST*2	ECM*3	
ENG OVER TEMP	P1217	1217	EC-1213
ETC ACTR	P1121	1121	EC-1148
ETC FUNCTION/CIRC	P1122	1122	EC-1150
ETC MOT	P1128	1128	EC-1161
ETC MOT PWR	P1124	1124	EC-1156
ETC MOT PWR	P1126	1126	EC-1156
EVAP GROSS LEAK	P0455	0455	EC-1100
EVAP PURG FLOW/MON	P0441	0441	EC-1056
EVAP SMALL LEAK	P0442	0442	EC-1061
EVAP SYS PRES SEN	P0451	0451	EC-1083
EVAP SYS PRES SEN	P0452	0452	EC-1086
EVAP SYS PRES SEN	P0453	0453	EC-1092
EVAP VERY SML LEAK	P0456	0456	EC-1108
FR/B SOLENOID FNCT	P1759	1759	AT-156
FR/B SOLENOID/CIRC	P1757	1757	AT-154
FTT SEN/CIRCUIT	P0182	0182	EC-1010
FTT SEN/CIRCUIT	P0183	0183	EC-1010
FTT SENSOR	P0181	0181	EC-1004
FUEL LEV SEN SLOSH	P0460	0460	EC-1117
FUEL LEVEL SENSOR	P0461	0461	EC-1119
FUEL LEVL SEN/CIRC	P0462	0462	EC-1121
FUEL LEVL SEN/CIRC	P0463	0463	EC-1121
FUEL SYS-LEAN-B1	P0171	0171	EC-986
FUEL SYS-LEAN-B2	P0174	0174	EC-986
FUEL SYS-RICH-B1	P0172	0172	EC-995
FUEL SYS-RICH-B2	P0175	0175	EC-995
HLR/C SOL/CIRC	P1767	1767	AT-162
HLR/C SOL FNCTN	P1769	1769	AT-164
HO2S1 (B1)	P0132	0132	EC-935
HO2S1 (B1)	P0133	0133	EC-944
HO2S1 (B1)	P0134	0134	EC-956
HO2S1 (B1)	P1143	1143	EC-1174
HO2S1 (B1)	P1144	1144	EC-1180
HO2S1 (B2)	P0152	0152	EC-935
HO2S1 (B2)	P0153	0153	EC-944
HO2S1 (B2)	P0154	0154	EC-956
HO2S1 (B2)	P1163	1163	EC-1174
HO2S1 (B2)	P1164	1164	EC-1180
HO2S1 HTR (B1)	P0031	0031	EC-877
HO2S1 HTR (B1)	P0032	0032	EC-877
HO2S1 HTR (B2)	P0051	0051	EC-877
HO2S1 HTR (B2)	P0052	0052	EC-877

Items (CONSULT-II screen terms)	DTC*1		Reference page
	CONSULT-II GST*2	ECM*3	
HO2S2 (B1)	P0138	0138	EC-966
HO2S2 (B1)	P0139	0139	EC-975
HO2S2 (B1)	P1146	1146	EC-1187
HO2S2 (B1)	P1147	1147	EC-1198
HO2S2 (B2)	P0158	0158	EC-966
HO2S2 (B2)	P0159	0159	EC-975
HO2S2 (B2)	P1166	1166	EC-1187
HO2S2 (B2)	P1167	1167	EC-1198
HO2S2 HTR (B1)	P0037	0037	EC-885
HO2S2 HTR (B1)	P0038	0038	EC-885
HO2S2 HTR (B2)	P0057	0057	EC-885
HO2S2 HTR (B2)	P0058	0058	EC-885
I/C SOLENOID/CIRC	P1752	1752	AT-150
I/C SOLENOID FNCTN	P1754	1754	AT-152
IAT SEN/CIRCUIT	P0112	0112	EC-909
IAT SEN/CIRCUIT	P0113	0113	EC-909
IAT SENSOR	P0127	0127	EC-930
INT/V TIM CONT-B1	P0011	0011	EC-865
INT/V TIM CONT-B2	P0021	0021	EC-865
INT/V TIM V/CIR-B1	P1111	1111	EC-1141
INT/V TIM V/CIR-B2	P1136	1136	EC-1141
INTK TIM S/CIRC-B1	P1140	1140	EC-1166
INTK TIM S/CIRC-B2	P1145	1145	EC-1166
ISC SYSTEM	P0506	0506	EC-1125
ISC SYSTEM	P0507	0507	EC-1127
KNOCK SEN/CIRC-B1	P0327	0327	EC-1031
KNOCK SEN/CIRC-B1	P0328	0328	EC-1031
KNOCK SEN/CIRC-B2	P0332	0332	EC-1031
KNOCK SEN/CIRC-B2	P0333	0333	EC-1031
L/PRESS SOL/CIRC	P0745	0745	AT-129
LC/B SOLENOID FNCT	P1774	1774	AT-168
LC/B SOLENOID/CIRC	P1772	1772	AT-166
MAF SEN/CIRCUIT	P0101	0101	EC-893
MAF SEN/CIRCUIT	P0102	0102	EC-902
MAF SEN/CIRCUIT	P0103	0103	EC-902
MULTI CYL MISFIRE	P0300	0300	EC-1022
NATS MALFUNCTION	P1610 - P1615	1610 - 1615	EC-744
NO DTC IS DETECTED. FURTHER TESTING MAY BE REQUIRED.	**P0000**	**0000**	**—**
NO DTC IS DETECTED. FURTHER TESTING MAY BE REQUIRED.	No DTC	Flashing*4	EC-761
P-N POS SW/CIRCUIT	P1706	1706	EC-1283

Items (CONSULT-II screen terms)	DTC*1		Reference page
	CONSULT-II GST*2	ECM*3	
PNP SW/CIRC	P0705	0705	AT-114
PURG VOLUME CONT/V	P0444	0444	EC-1069
PURG VOLUME CONT/V	P0445	0445	EC-1069
PURG VOLUME CONT/V	P1444	1444	EC-1233
PW ST P SEN/CIRC	P0550	0550	EC-1129
SENSOR POWER/CIRC	P1229	1229	EC-1229
SHIFT SIG FNCTN	P1780	1780	EC-1290
TCC SOLENOID/CIRC	P0740	0740	AT-125
TCM	P0700	0700	AT-113
TCS C/U FUNCTN	P1211	1211	EC-1211
TCS/CIRC	P1212	1212	EC-1212
THERMSTAT FNCTN	P0128	0128	EC-933
TP SEN 1/CIRC	P0222	0222	EC-1015
TP SEN 1/CIRC	P0223	0223	EC-1015
TP SEN 2/CIRC	P0122	0122	EC-920
TP SEN 2/CIRC	P0123	0123	EC-920
TP SENSOR	P2135	2135	EC-1316
TURBINE REV S/CIRC	P1716	1716	AT-141
TW CATALYST SYS-B1	P0420	0420	EC-1050
TW CATALYST SYS-B2	P0430	0430	EC-1050
V/SP SEN(A/T OUT)	P1720	1720	EC-1288
VEH SPD SEN/CIR AT*6	P0720	0720	AT-118
VEH SPEED SEN/CIRC*6	P0500	0500	EC-1123
VENT CONTROL VALVE	P0447	0447	EC-1076
VENT CONTROL VALVE	P1446	1446	EC-1241
VIAS S/V CIRC	P1800	1800	EC-1292

*1: 1st trip DTC No. is the same as DTC No.
*2: This number is prescribed by SAE J2012.
*3: In Diagnostic Test Mode II (Self-diagnostic results), this number is controlled by NISSAN.
*4: When engine is running.
*5: The troubleshooting for this DTC needs CONSULT-II.
*6: When the fail-safe operations for both self-diagnoses occur at the same time, the MIL illuminates.
*7: Models with ICC.

PRECAUTIONS

PFP:00001

Precautions for Supplemental Restraint System (SRS) “AIR BAG” and “SEAT BELT PRE-TENSIONER”

ABS00A2S

The Supplemental Restraint System such as “AIR BAG” and “SEAT BELT PRE-TENSIONER”, used along with a front seat belt, helps to reduce the risk or severity of injury to the driver and front passenger for certain types of collision. This system includes seat belt switch inputs and dual stage front air bag modules. The SRS system uses the seat belt switches to determine the front air bag deployment, and may only deploy one front air bag, depending on the severity of a collision and whether the front occupants are belted or unbelted.
Information necessary to service the system safely is included in the SRS and SB section of this Service Manual.

WARNING:

- **To avoid rendering the SRS inoperative, which could increase the risk of personal injury or death in the event of a collision which would result in air bag inflation, all maintenance must be performed by an authorized NISSAN/INFINITI dealer.**
- **Improper maintenance, including incorrect removal and installation of the SRS, can lead to personal injury caused by unintentional activation of the system. For removal of Spiral Cable and Air Bag Module, see the SRS section.**
- **Do not use electrical test equipment on any circuit related to the SRS unless instructed to in this Service Manual. SRS wiring harnesses can be identified by yellow and/or orange harnesses or harness connectors.**

On Board Diagnostic (OBD) System of Engine and A/T

ABS007H9

The ECM has an on board diagnostic system. It will light up the malfunction indicator lamp (MIL) to warn the driver of a malfunction causing emission deterioration.

CAUTION:

- **Be sure to turn the ignition switch OFF and disconnect the negative battery cable before any repair or inspection work. The open/short circuit of related switches, sensors, solenoid valves, etc. will cause the MIL to light up.**
- **Be sure to connect and lock the connectors securely after work. A loose (unlocked) connector will cause the MIL to light up due to the open circuit. (Be sure the connector is free from water, grease, dirt, bent terminals, etc.)**
- **Certain systems and components, especially those related to OBD, may use a new style slide-locking type harness connector. For description and how to disconnect, refer to PG-74, "HARNESS CONNECTOR" .**
- **Be sure to route and secure the harnesses properly after work. The interference of the harness with a bracket, etc. may cause the MIL to light up due to the short circuit.**
- **Be sure to connect rubber tubes properly after work. A misconnected or disconnected rubber tube may cause the MIL to light up due to the malfunction of the EVAP system or fuel injection system, etc.**
- **Be sure to erase the unnecessary malfunction information (repairs completed) from the ECM and TCM (Transmission control module) before returning the vehicle to the customer.**

Precaution

ABS007HA

- **Always use a 12 volt battery as power source.**
- **Do not attempt to disconnect battery cables while engine is running.**
- **Before connecting or disconnecting the ECM harness connector, turn ignition switch OFF and disconnect negative battery cable. Failure to do so may damage the ECM because battery voltage is applied to ECM even if ignition switch is turned OFF.**
- **Before removing parts, turn ignition switch OFF and then disconnect battery ground cable.**

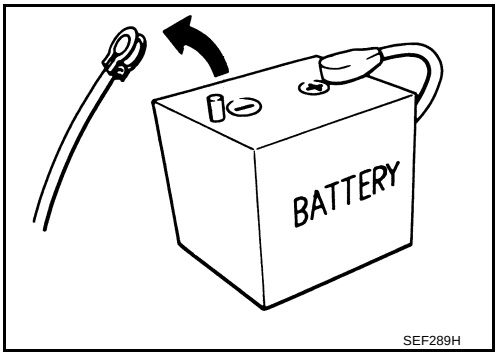

- Do not disassemble ECM.
- If a battery cable is disconnected, the memory will return to the ECM value.
  The ECM will now start to self-control at its initial value. Engine operation can vary slightly when the terminal is disconnected. However, this is not an indication of a malfunction. Do not replace parts because of a slight variation.
- If the battery is disconnected, the following emission-related diagnostic information will be lost within 24 hours.
  - Diagnostic trouble codes
  - 1st trip diagnostic trouble codes
  - Freeze frame data
  - 1st trip freeze frame data
  - System readiness test (SRT) codes
  - Test values

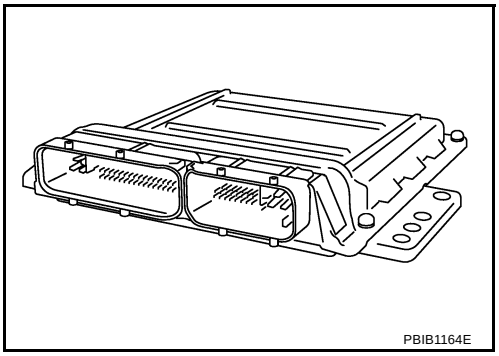
PBIB1164E

- When connecting ECM harness connector, fasten it securely with a lever as far as it will go as shown in the figure.

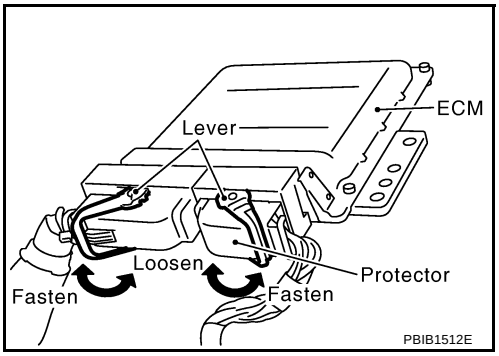

PBIB1512E

- When connecting or disconnecting pin connectors into or from ECM, take care not to damage pin terminals (bend or break).
  Make sure that there are not any bends or breaks on ECM pin terminal, when connecting pin connectors.
- Securely connect ECM harness connectors.
  A poor connection can cause an extremely high (surge) voltage to develop in coil and condenser, thus resulting in damage to ICs.
- Keep engine control system harness at least 10 cm (4 in) away from adjacent harness, to prevent engine control system malfunctions due to receiving external noise, degraded operation of ICs, etc.
- Keep engine control system parts and harness dry.

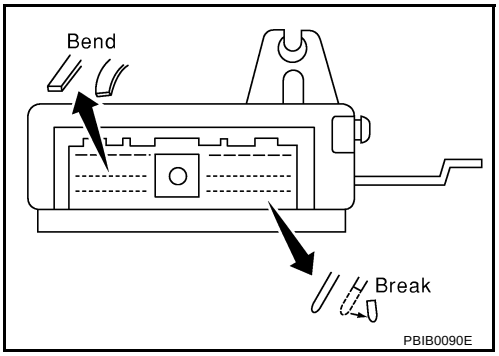

PBIB0090E

- Before replacing ECM, perform ECM Terminals and Reference Value inspection and make sure ECM functions properly. Refer to EC-813 .
- Handle mass air flow sensor carefully to avoid damage.
- Do not disassemble mass air flow sensor.
- Do not clean mass air flow sensor with any type of detergent.
- Do not disassemble electric throttle control actuator.
- Even a slight leak in the air intake system can cause serious incidents.
- Do not shock or jar the camshaft position sensor (PHASE), crankshaft position sensor (POS).

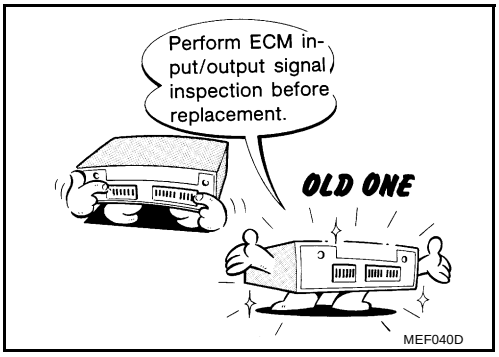

MEF040D

- **After performing each TROUBLE DIAGNOSIS, perform DTC Confirmation Procedure or Overall Function Check.**
  The DTC should not be displayed in the DTC Confirmation Procedure if the repair is completed. The Overall Function Check should be a good result if the repair is completed.

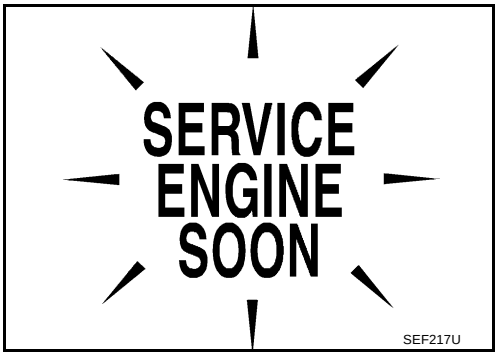

- **When measuring ECM signals with a circuit tester, never allow the two tester probes to contact.**
  Accidental contact of probes will cause a short circuit and damage the ECM power transistor.
- **Do not use ECM ground terminals when measuring input/output voltage. Doing so may result in damage to the ECM's transistor. Use a ground other than ECM terminals, such as the ground.**

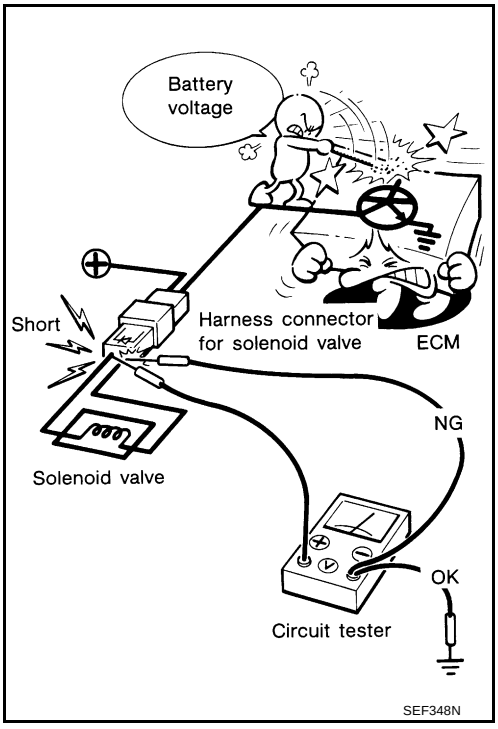

- **B1 indicates the bank 1, B2 indicates the bank 2 as shown in the figure.**

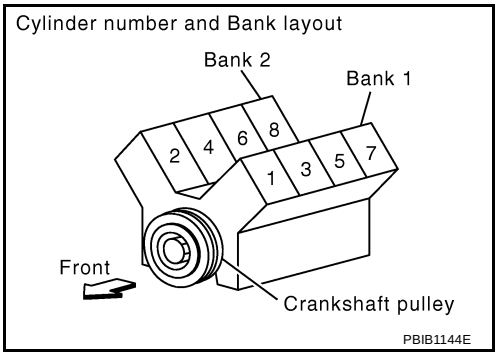

- **Do not operate fuel pump when there is no fuel in lines.**
- **Tighten fuel hose clamps to the specified torque.**

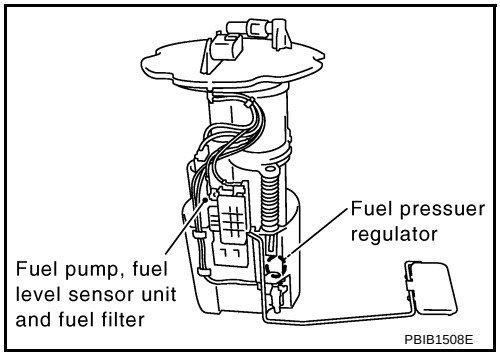

- **Do not depress accelerator pedal when starting.**
- **Immediately after starting, do not rev up engine unnecessarily.**
- **Do not rev up engine just prior to shutdown.**

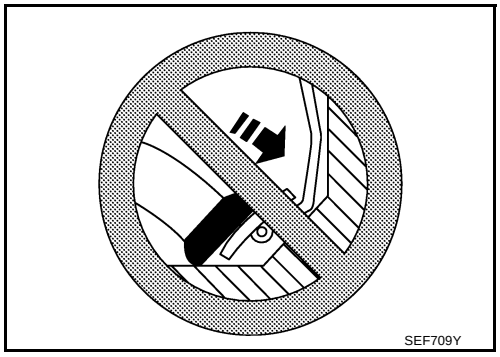

- **When installing C.B. ham radio or a mobile phone, be sure to observe the following as it may adversely affect electronic control systems depending on installation location.**
  - **Keep the antenna as far as possible from the electronic control units.**
  - **Keep the antenna feeder line more than 20 cm (8 in) away from the harness of electronic controls.**
    Do not let them run parallel for a long distance.
  - **Adjust the antenna and feeder line so that the standing-wave radio can be kept smaller.**
  - **Be sure to ground the radio to vehicle body.**

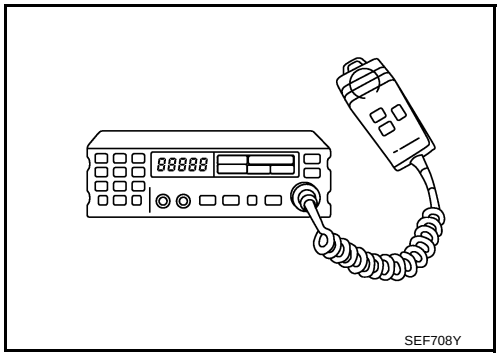

PREPARATION

PFP:00002

Special Service Tools

ABS007HC

The actual shapes of Kent-Moore tools may differ from those of special service tools illustrated here.

Tool number (Kent-Moore No.) Tool name		Description
EG17650301 (J-33984-A) Radiator cap tester adapter	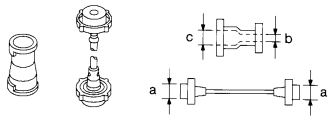 S-NT564	Adapting radiator cap tester to radiator cap and radiator filler neck **a: 28 (1.10) dia.** **b: 31.4 (1.236) dia.** **c: 41.3 (1.626) dia.** Unit: mm (in)
KV10117100 (J-36471-A) Heated oxygen sensor wrench	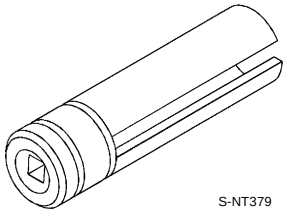 S-NT379	Loosening or tightening heated oxygen sensor with 22 mm (0.87 in) hexagon nut
KV10114400 (J-38365) Heated oxygen sensor wrench	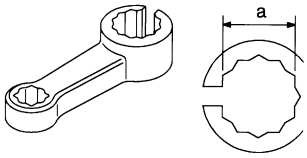 S-NT636	Loosening or tightening heated oxygen sensor **a: 22 mm (0.87 in)**
(J-44321) Fuel pressure gauge kit	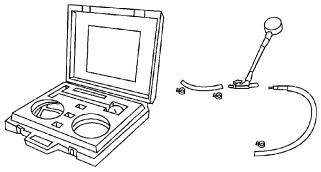 LEC642	Checking fuel pressure
KV109E0010 (J-46209) Break-out box	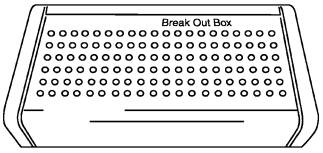 S-NT825	Measuring the ECM signals with a circuit tester
KV109E0080 (J-45819) Y-cable adapter	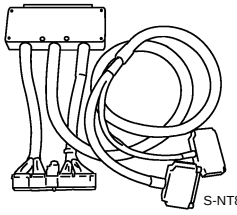 S-NT826	Measuring the ECM signals with a circuit tester

Commercial Service Tools

ABS007HD

Tool name (Kent-Moore No.)		Description
Leak detector i.e.: (J-41416)	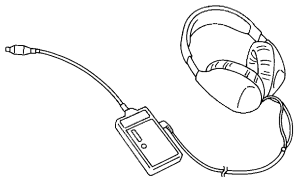 S-NT703	Locating the EVAP leak
EVAP service port adapter i.e.: (J-41413-OBD)	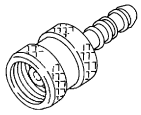 S-NT704	Applying positive pressure through EVAP service port
Fuel filler cap adapter i.e.: (MLR-8382)	 S-NT815	Checking fuel tank vacuum relief valve opening pressure
Socket wrench	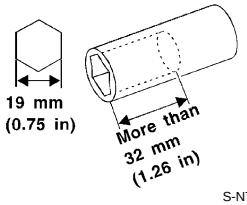 S-NT705	Removing and installing engine coolant temperature sensor
Oxygen sensor thread cleaner i.e.: (J-43897-18) (J-43897-12)	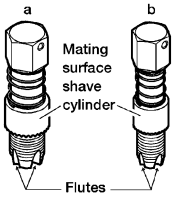 AEM488	Reconditioning the exhaust system threads before installing a new oxygen sensor. Use with anti-seize lubricant shown below. **a: 18 mm diameter with pitch 1.5 mm for Zirconia Oxygen Sensor** **b: 12 mm diameter with pitch 1.25 mm for Titania Oxygen Sensor**
Anti-seize lubricant i.e.: (Permatex™ 133AR or equivalent meeting MIL specification MIL-A-907)	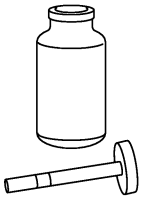 S-NT779	Lubricating oxygen sensor thread cleaning tool when reconditioning exhaust system threads.

ENGINE CONTROL SYSTEM

PFP:23710

System Diagram

ABS00E3X

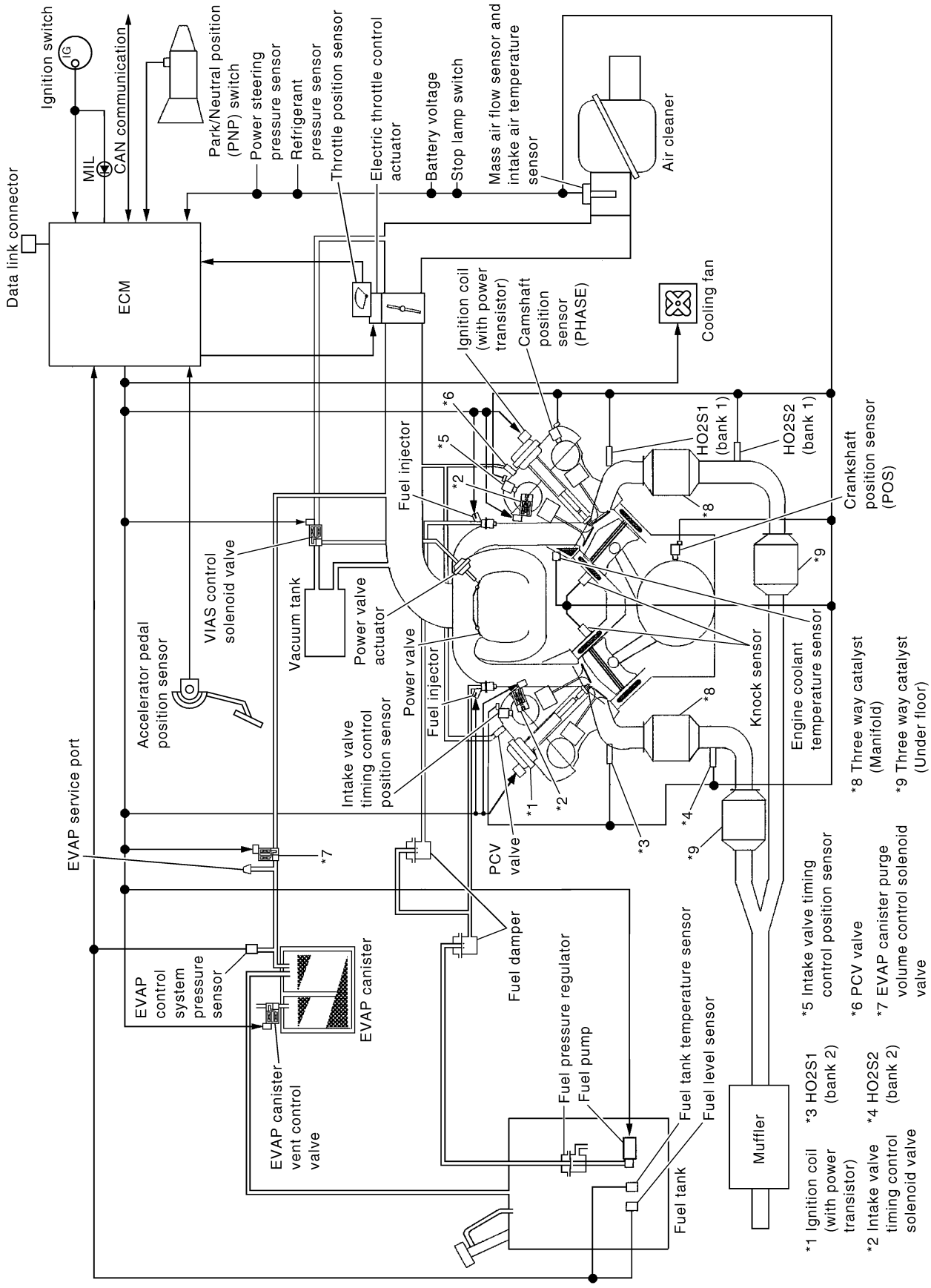

PBIB2554E

Multiport Fuel Injection (MFI) System

ABS00E3Y

INPUT/OUTPUT SIGNAL CHART

Sensor	Input Signal to ECM	ECM function	Actuator
Crankshaft position sensor (POS)	Engine speed*3 Piston position	Fuel injection & mixture ratio control	Fuel injector
Camshaft position sensor (PHASE)			
Mass air flow sensor	Amount of intake air		
Engine coolant temperature sensor	Engine coolant temperature		
Heated oxygen sensor 1	Density of oxygen in exhaust gas		
Throttle position sensor	Throttle position		
Accelerator pedal position sensor	Accelerator pedal position		
Park/neutral position (PNP) switch	Gear position		
Battery	Battery voltage*3		
Knock sensor	Engine knocking condition		
Power steering pressure sensor	Power steering operation		
Heated oxygen sensor 2*1	Density of oxygen in exhaust gas		
ABS actuator and electric unit (control unit)*2	VDC/TCS operation command		
Air conditioner switch*2	Air conditioner operation		
Wheel sensor*2	Vehicle speed		

*1: This sensor is not used to control the engine system under normal conditions.
*2: This signal is sent to the ECM through CAN communication line.
*3: ECM determines the start signal status by the signals of engine speed and battery voltage.

SYSTEM DESCRIPTION

The amount of fuel injected from the fuel injector is determined by the ECM. The ECM controls the length of time the valve remains open (injection pulse duration). The amount of fuel injected is a program value in the ECM memory. The program value is preset by engine operating conditions. These conditions are determined by input signals (for engine speed and intake air) from the crankshaft position sensor (POS), camshaft position sensor (PHASE) and the mass air flow sensor.

VARIOUS FUEL INJECTION INCREASE/DECREASE COMPENSATION

In addition, the amount of fuel injected is compensated to improve engine performance under various operating conditions as listed below.

<Fuel increase>

- During warm-up
- When starting the engine
- During acceleration
- Hot-engine operation
- When selector lever is changed from N to D
- High-load, high-speed operation

<Fuel decrease>

- During deceleration
- During high engine speed operation

MIXTURE RATIO FEEDBACK CONTROL (CLOSED LOOP CONTROL)

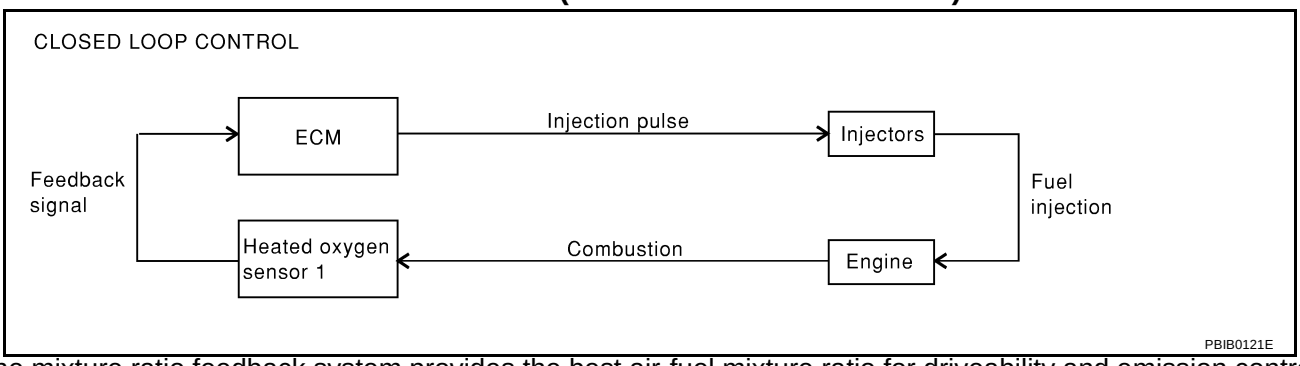

The mixture ratio feedback system provides the best air-fuel mixture ratio for driveability and emission control. The three way catalyst (manifold) can then better reduce CO, HC and NOx emissions. This system uses heated oxygen sensor 1 in the exhaust manifold to monitor whether the engine operation is rich or lean. The ECM adjusts the injection pulse width according to the sensor voltage signal. For more information about heated oxygen sensor 1, refer to EC-935 . This maintains the mixture ratio within the range of stoichiometric (ideal air-fuel mixture).
This stage is referred to as the closed loop control condition.
Heated oxygen sensor 2 is located downstream of the three way catalyst (manifold). Even if the switching characteristics of heated oxygen sensor 1 shift, the air-fuel ratio is controlled to stoichiometric by the signal from heated oxygen sensor 2.

Open Loop Control

The open loop system condition refers to when the ECM detects any of the following conditions. Feedback control stops in order to maintain stabilized fuel combustion.

- Deceleration and acceleration
- High-load, high-speed operation
- Malfunction of heated oxygen sensor 1 or its circuit
- Insufficient activation of heated oxygen sensor 1 at low engine coolant temperature
- High engine coolant temperature
- During warm-up
- After shifting from N to D
- When starting the engine

MIXTURE RATIO SELF-LEARNING CONTROL

The mixture ratio feedback control system monitors the mixture ratio signal transmitted from heated oxygen sensor 1. This feedback signal is then sent to the ECM. The ECM controls the basic mixture ratio as close to the theoretical mixture ratio as possible. However, the basic mixture ratio is not necessarily controlled as originally designed. Both manufacturing differences (i.e., mass air flow sensor hot wire) and characteristic changes during operation (i.e., injector clogging) directly affect mixture ratio.
Accordingly, the difference between the basic and theoretical mixture ratios is monitored in this system. This is then computed in terms of “injection pulse duration” to automatically compensate for the difference between the two ratios.
“Fuel trim” refers to the feedback compensation value compared against the basic injection duration. Fuel trim includes short term fuel trim and long term fuel trim.
“Short term fuel trim” is the short-term fuel compensation used to maintain the mixture ratio at its theoretical value. The signal from heated oxygen sensor 1 indicates whether the mixture ratio is RICH or LEAN compared to the theoretical value. The signal then triggers a reduction in fuel volume if the mixture ratio is rich, and an increase in fuel volume if it is lean.
“Long term fuel trim” is overall fuel compensation carried out long-term to compensate for continual deviation of the short term fuel trim from the central value. Such deviation will occur due to individual engine differences, wear over time and changes in the usage environment.

FUEL INJECTION TIMING

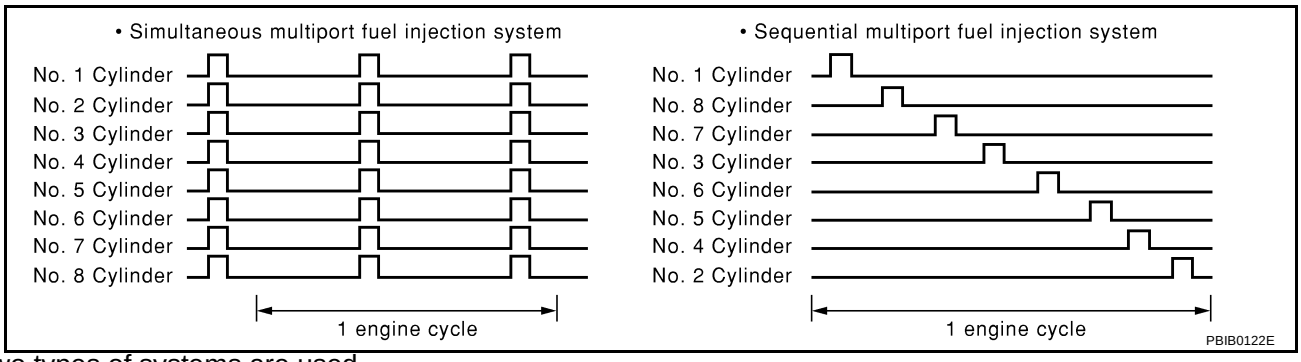

Two types of systems are used.

Sequential Multiport Fuel Injection System

Fuel is injected into each cylinder during each engine cycle according to the firing order. This system is used when the engine is running.

Simultaneous Multiport Fuel Injection System

Fuel is injected simultaneously into all eight cylinders twice each engine cycle. In other words, pulse signals of the same width are simultaneously transmitted from the ECM.
The eight injectors will then receive the signals two times for each engine cycle.
This system is used when the engine is being started and/or if the fail-safe system (CPU) is operating.

FUEL SHUT-OFF

Fuel to each cylinder is cut off during deceleration, operation of the engine at excessively high speeds or operation of the vehicle at excessively high speeds.

Electronic Ignition (EI) System

ABS00E3Z

INPUT/OUTPUT SIGNAL CHART

Sensor	Input Signal to ECM	ECM function	Actuator
Crankshaft position sensor (POS)	Engine speed*2 Piston position	Ignition timing control	Power transistor
Camshaft position sensor (PHASE)			
Mass air flow sensor	Amount of intake air		
Engine coolant temperature sensor	Engine coolant temperature		
Throttle position sensor	Throttle position		
Accelerator pedal position sensor	Accelerator pedal position		
Battery	Battery voltage*2		
Knock sensor	Engine knocking		
Park/neutral position (PNP) switch	Gear position		
Wheel sensor*1	Vehicle speed		

*1: This signal is sent to the ECM through CAN communication line.
*2: ECM determines the start signal status by the signals of engine speed and battery voltage.

SYSTEM DESCRIPTION

Firing order: 1 - 8 - 7 - 3 - 6 - 5 - 4 - 2
The ignition timing is controlled by the ECM to maintain the best air-fuel ratio for every running condition of the engine. The ignition timing data is stored in the ECM.
The ECM receives information such as the injection pulse width and camshaft position sensor (PHASE) signal. Computing this information, ignition signals are transmitted to the power transistor.
During the following conditions, the ignition timing is revised by the ECM according to the other data stored in the ECM.

- At starting
- During warm-up
- At idle
- At low battery voltage

- During acceleration

The knock sensor retard system is designed only for emergencies. The basic ignition timing is programmed within the anti-knocking zone, if recommended fuel is used under dry conditions. The retard system does not operate under normal driving conditions. If engine knocking occurs, the knock sensor monitors the condition. The signal is transmitted to the ECM. The ECM retards the ignition timing to eliminate the knocking condition.

Fuel Cut Control (at No Load and High Engine Speed)

ABS00E40

INPUT/OUTPUT SIGNAL CHART

Sensor	Input Signal to ECM	ECM function	Actuator
Park/neutral position (PNP) switch	Neutral position	Fuel cut control	Fuel injector
Accelerator pedal position sensor	Accelerator pedal position		
Engine coolant temperature sensor	Engine coolant temperature		
Crankshaft position sensor (POS) Camshaft position sensor (PHASE)	Engine speed		
Wheel sensor*	Vehicle speed		

*: This signal is sent to the ECM through CAN communication line.

SYSTEM DESCRIPTION

If the engine speed is above 1,400 rpm under no load (for example, the selector lever position is neutral and engine speed is over 1,400 rpm) fuel will be cut off after some time. The exact time when the fuel is cut off varies based on engine speed.
Fuel cut will be operated until the engine speed reaches 1,000 rpm, then fuel cut will be cancelled.

NOTE:
This function is different from deceleration control listed under Multiport Fuel Injection (MFI) System, EC-722 .

AIR CONDITIONING CUT CONTROL

PFP:23710

Input/Output Signal Chart

ABS00E41

Sensor	Input Signal to ECM	ECM function	Actuator
Air conditioner switch*1	Air conditioner ON signal	Air conditioner cut control	Air conditioner relay
Accelerator pedal position sensor	Accelerator pedal position		
Crankshaft position sensor (POS) Camshaft position sensor (PHASE)	Engine speed*2		
Engine coolant temperature sensor	Engine coolant temperature		
Battery	Battery voltage*2		
Refrigerant pressure sensor	Refrigerant pressure		
Power steering pressure sensor	Power steering operation		
Wheel sensor*1	Vehicle speed		

*1: This signal is sent to the ECM through CAN communication line.
*2: ECM determines the start signal status by the signals of engine speed and battery voltage.

System Description

ABS00E42

This system improves engine operation when the air conditioner is used.
Under the following conditions, the air conditioner is turned off.

- When the accelerator pedal is fully depressed.
- When cranking the engine.
- At high engine speeds.
- When the engine coolant temperature becomes excessively high.
- When operating power steering during low engine speed or low vehicle speed.
- When engine speed is excessively low.
- When refrigerant pressure is excessively low or high.

AUTOMATIC SPEED CONTROL DEVICE (ASCD)

PFP:18930

System Description

ABS00E43

INPUT/OUTPUT SIGNAL CHART

Sensor	Input signal to ECM	ECM function	Actuator
ASCD brake switch	Brake pedal operation	ASCD vehicle speed control	Electric throttle control actuator
Stop lamp switch	Brake pedal operation		
ASCD steering switch	ASCD steering switch operation		
Park/Neutral position (PNP) switch	Gear position		
Wheel sensor*	Vehicle speed		
TCM*	Powertrain revolution		

*: This signal is sent to the ECM through CAN communication line

BASIC ASCD SYSTEM

Refer to Owner's Manual for ASCD operating instructions.
Automatic Speed Control Device (ASCD) allows a driver to keep vehicle at predetermined constant speed without depressing accelerator pedal. Driver can set vehicle speed in advance between approximately 40 km/h (25 MPH) and 144 km/h (89 MPH).
ECM controls throttle angle of electric throttle control actuator to regulate engine speed.
Operation status of ASCD is indicated by CRUISE lamp and SET lamp in combination meter. If any malfunction occurs in ASCD system, it automatically deactivates control.

NOTE:
Always drive vehicle in safe manner according to traffic conditions and obey all traffic laws.

SET OPERATION

Press MAIN switch. (The CRUISE lamp in combination meter illuminates.)
When vehicle speed reaches a desired speed between approximately 40 km/h (25 MPH) and 144 km/h (89 MPH), press SET/COAST switch. (Then SET lamp in combination meter illuminates.)

ACCEL OPERATION

If the RESUME/ACCELERATE switch is pressed during cruise control driving, increase the vehicle speed until the switch is released or vehicle speed reaches maximum speed controlled by the system.
And then ASCD will keep the new set speed.

CANCEL OPERATION

When any of following conditions exist, cruise operation will be canceled.

- CANCEL switch is pressed
- More than 2 switches at ASCD steering switch are pressed at the same time (Set speed will be cleared)
- Brake pedal is depressed
- Selector lever is changed to N, P, R position
- Vehicle speed decreased to 13 km/h (8 MPH) lower than the set speed
- TCS system is operated

When the ECM detects any of the following conditions, the ECM will cancel the cruise operation and inform the driver by blinking indicator lamp.

- Engine coolant temperature is slightly higher than the normal operating temperature, CRUISE lamp may blink slowly.
  When the engine coolant temperature decreases to the normal operating temperature, CRUISE lamp will stop blinking and the cruise operation will be able to work by pressing SET/COAST switch or RESUME/ACCELERATE switch.
- Malfunction for some self-diagnoses regarding ASCD control: SET lamp will blink quickly.

If MAIN switch is turned to OFF during ASCD is activated, all of ASCD operations will be canceled and vehicle speed memory will be erased.

COAST OPERATION

When the SET/COAST switch is pressed during cruise control driving, decrease vehicle set speed until the switch is released. And then ASCD will keep the new set speed.

RESUME OPERATION

When the RESUME/ACCELERATE switch is pressed after cancel operation other than pressing MAIN switch is performed, vehicle speed will return to last set speed. To resume vehicle set speed, vehicle condition must meet following conditions.

- Brake pedal is released
- A/T selector lever is in other than P and N positions
- Vehicle speed is greater than 40 km/h (25 MPH) and less than 144 km/h (89 MPH)

Component Description

ABS00E44

ASCD STEERING SWITCH

Refer to EC-1254 .

ASCD BRAKE SWITCH

Refer to EC-1271 , and EC-1378 .

STOP LAMP SWITCH

Refer to EC-1297 .

ELECTRIC THROTTLE CONTROL ACTUATOR

Refer to EC-1148 , EC-1150 , EC-1156 and EC-1161 .

ASCD INDICATOR

Refer to EC-1385 .

CAN COMMUNICATION

PFP:23710

System Description

ABS00E45

CAN (Controller Area Network) is a serial communication line for real time application. It is an on-vehicle multiplex communication line with high data communication speed and excellent error detection ability. Many electronic control units are equipped onto a vehicle, and each control unit shares information and links with other control units during operation (not independent). In CAN communication, control units are connected with 2 communication lines (CAN H line, CAN L line) allowing a high rate of information transmission with less wiring. Each control unit transmits/receives data but selectively reads required data only.
Refer to LAN-30, "CAN COMMUNICATION" , about CAN communication for detail.

EVAPORATIVE EMISSION SYSTEM

PFP:14950

Description

ABS007XT

SYSTEM DESCRIPTION

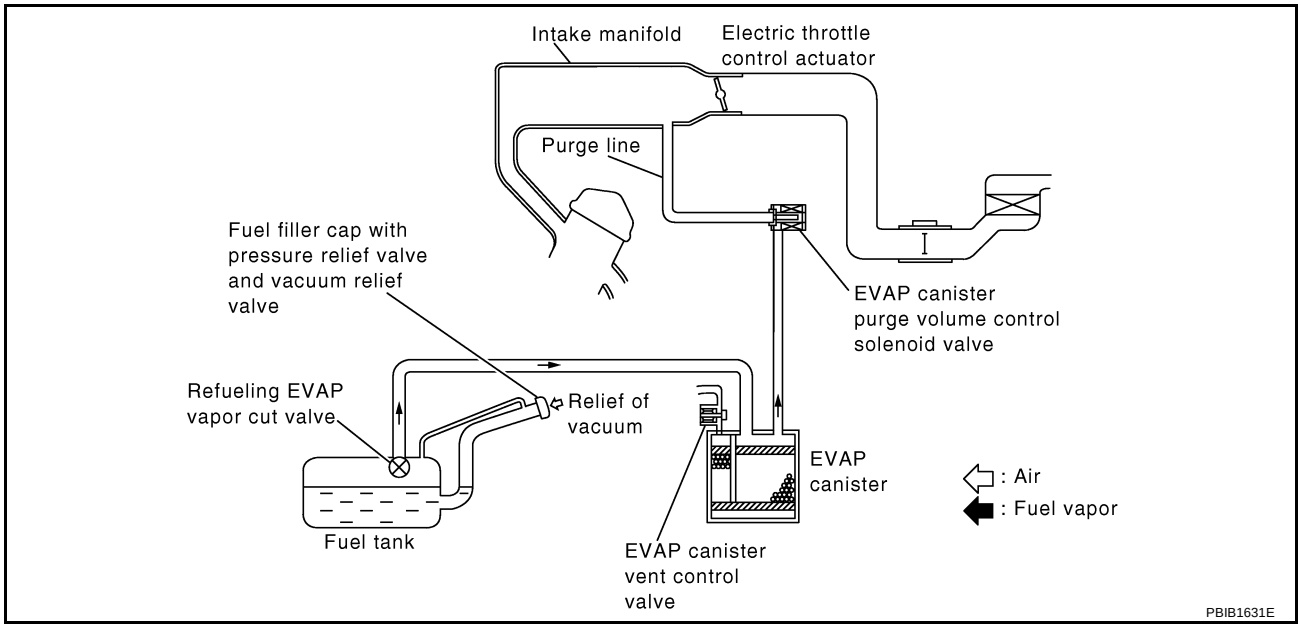

The evaporative emission system is used to reduce hydrocarbons emitted into the atmosphere from the fuel system. This reduction of hydrocarbons is accomplished by activated charcoals in the EVAP canister.
The fuel vapor in the sealed fuel tank is led into the EVAP canister which contains activated carbon and the vapor is stored there when the engine is not operating or when refueling to the fuel tank.
The vapor in the EVAP canister is purged by the air through the purge line to the intake manifold when the engine is operating. EVAP canister purge volume control solenoid valve is controlled by ECM. When the engine operates, the flow rate of vapor controlled by EVAP canister purge volume control solenoid valve is proportionally regulated as the air flow increases.
EVAP canister purge volume control solenoid valve also shuts off the vapor purge line during decelerating and idling.

EVAPORATIVE EMISSION LINE DRAWING

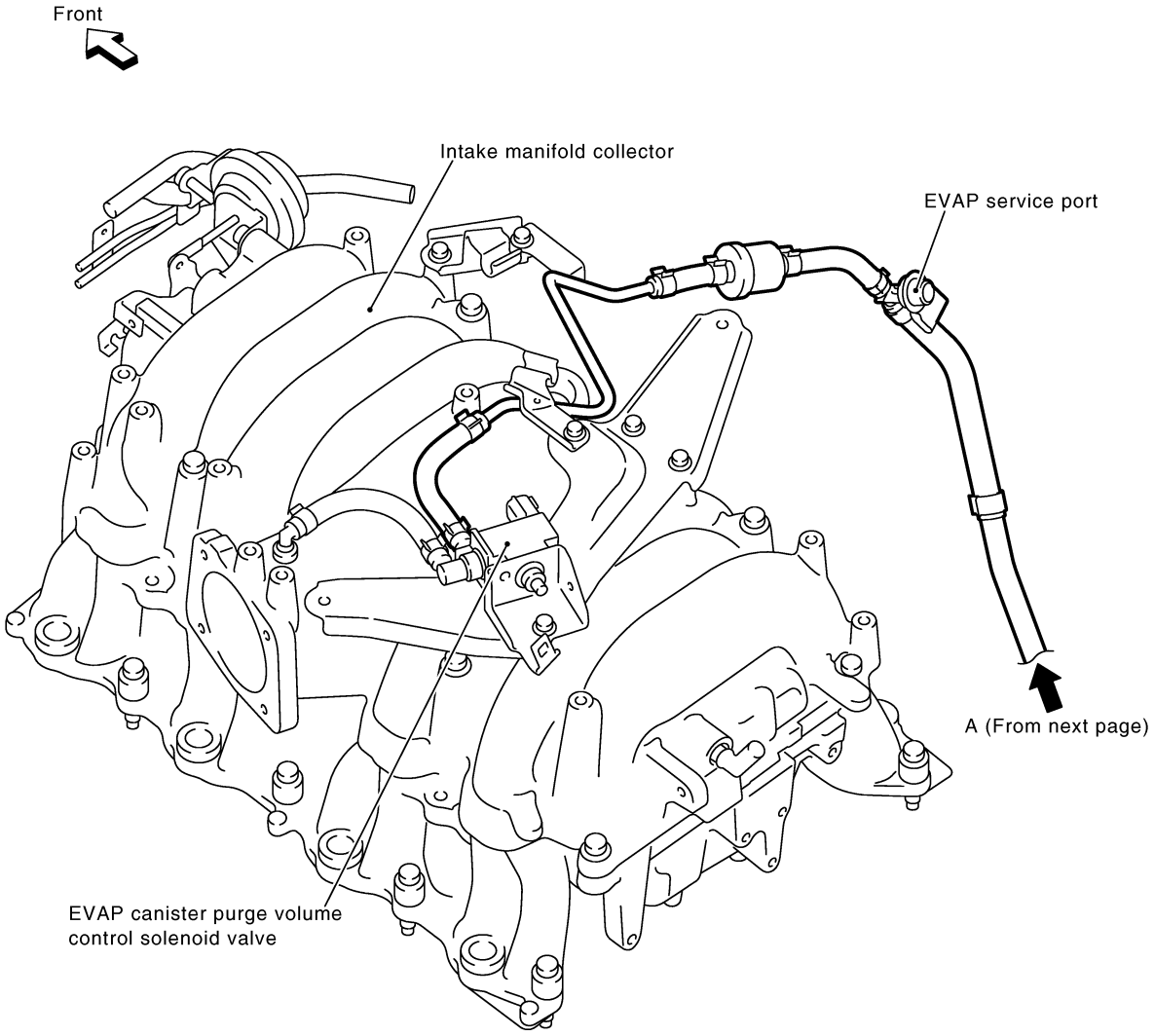

NOTE : Do not use soapy water or any type of solvent while installing vacuum hose or purge hoses.

PBIB1524E

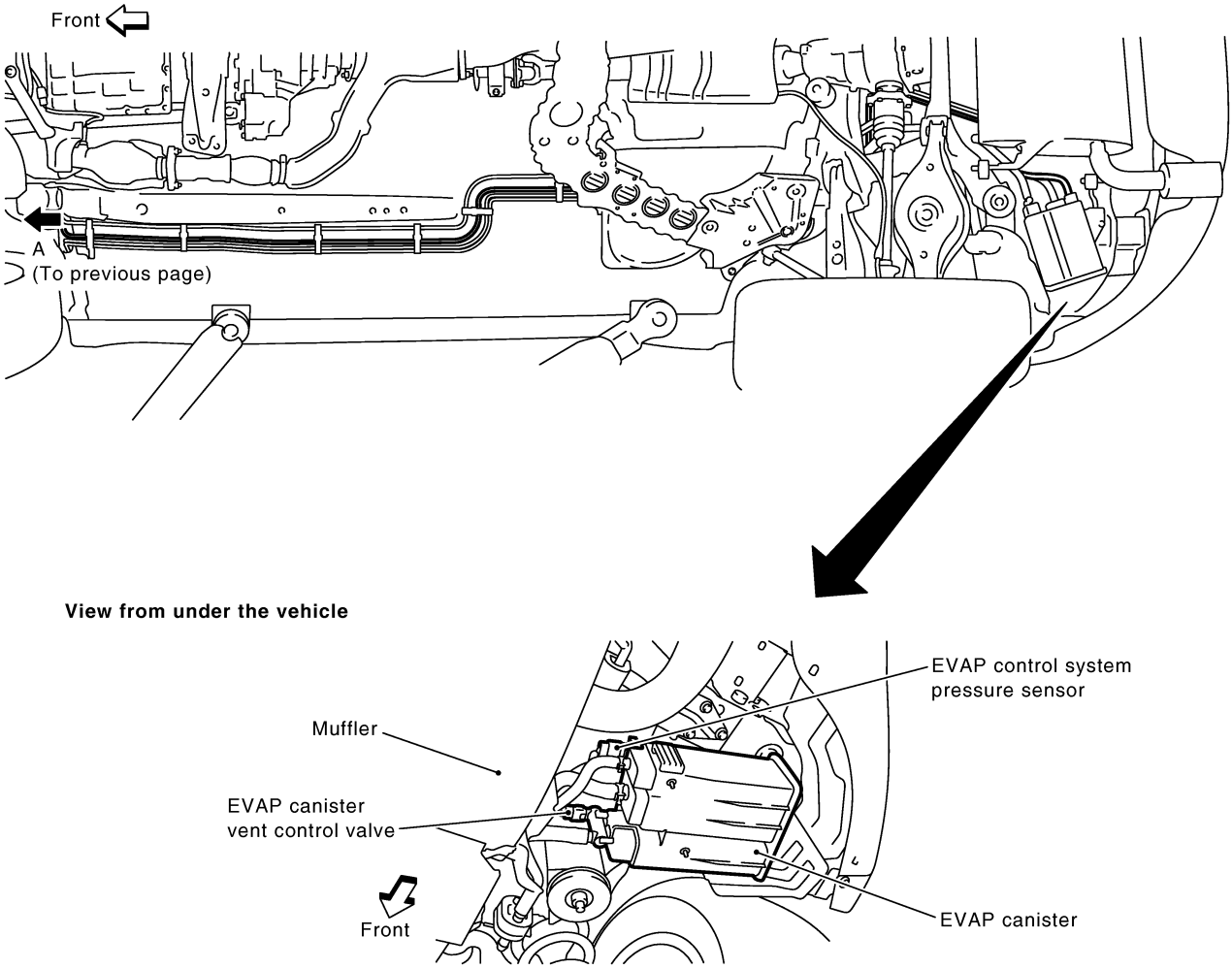
Front
A
(To previous page)
View from under the vehicle
EVAP control system
pressure sensor
Muffler
EVAP canister
vent control valve
Front
EVAP canister

PBIB1523E

Component Inspection

ABS007XU

EVAP CANISTER

Check EVAP canister as follows:

1. Block port **B** .
2. Blow air into port **A** and check that it flows freely out of port **C** .
3. Release blocked port **B** .
4. Apply vacuum pressure to port **B** and check that vacuum pressure exists at the ports **A** and **C** .
5. Block port **A** and **B** .
6. Apply pressure to port **C** and check that there is no leakage.

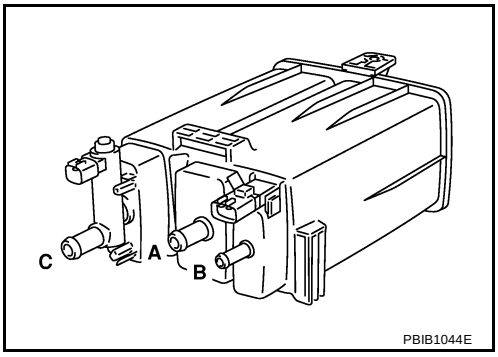

FUEL TANK VACUUM RELIEF VALVE (BUILT INTO FUEL FULLER CAP)

1. Wipe clean valve housing.

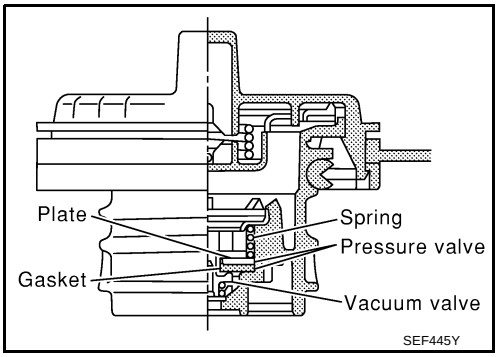

2. Check valve opening pressure and vacuum.

Pressure: **15.3 - 20.0 kPa (0.156 - 0.204 kg/cm^2 , 2.22 - 2.90 psi)**

Vacuum: **–6.0 to –3.3 kPa (–0.061 to –0.034 kg/cm^2 , –0.87 to –0.48 psi)**

3. If out of specification, replace fuel filler cap as an assembly.

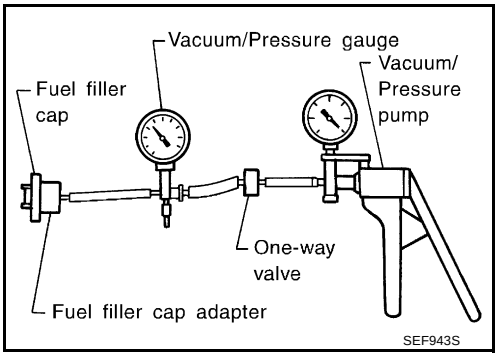

CAUTION:

Use only a genuine fuel filler cap as a replacement. If an incorrect fuel filler cap is used, the MIL may come on.

EVAP CANISTER PURGE VOLUME CONTROL SOLENOID VALVE

Refer to EC-1074 .

FUEL TANK TEMPERATURE SENSOR

Refer to EC-1014 .

EVAP CANISTER VENT CONTROL VALVE

Refer to EC-1081 .

EVAP CONTROL SYSTEM PRESSURE SENSOR

Refer to EC-1091 .

EVAP SERVICE PORT

Positive pressure is delivered to the EVAP system through the EVAP service port. If fuel vapor leakage in the EVAP system occurs, use a leak detector to locate the leak.

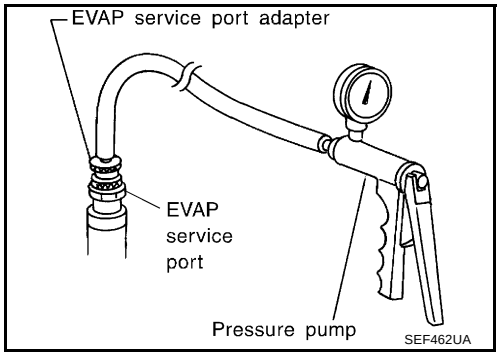

Removal and Installation

ABS007XV

EVAP CANISTER

Tighten EVAP canister as shown in the figure.

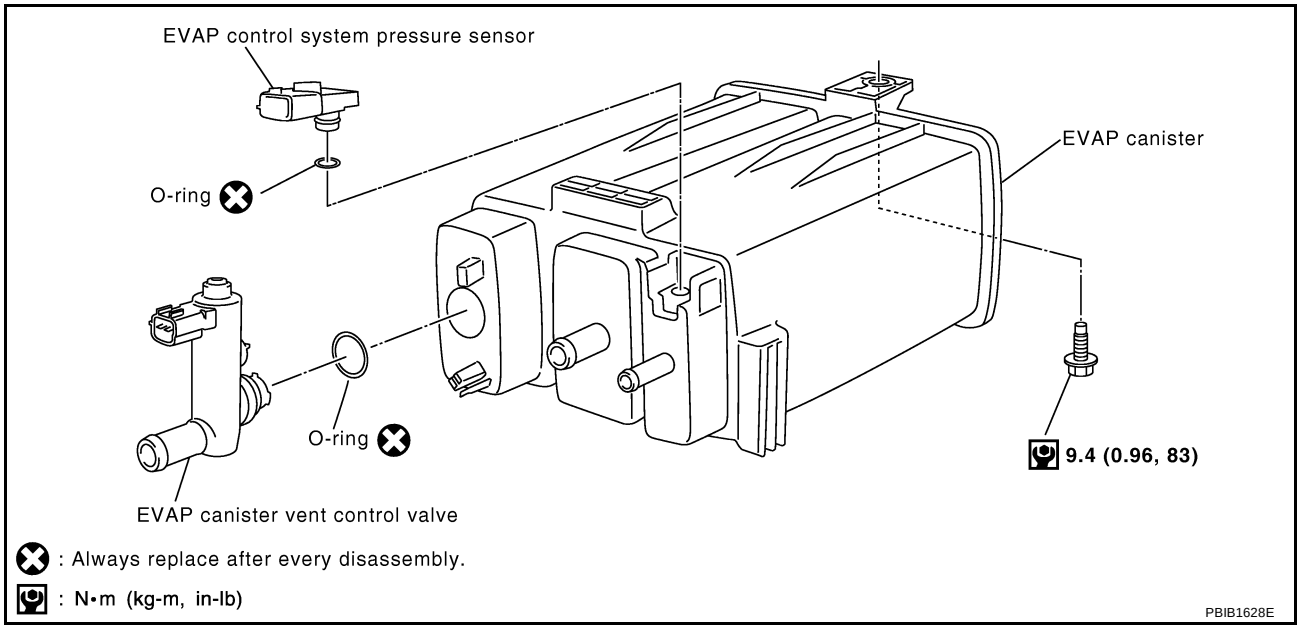

EVAP CANISTER VENT CONTROL VALVE

1. Turn EVAP canister vent control valve counterclockwise.
2. Remove the EVAP canister vent control valve.

Always replace O-ring with a new one.

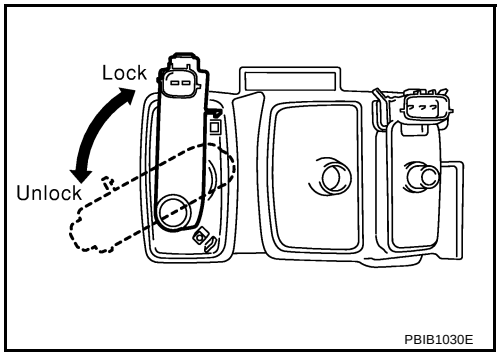

How to Detect Fuel Vapor Leakage

ABS007XW

CAUTION:

- **Do not use compressed air or a high pressure pump.**
- **Do not exceed 4.12 kPa (0.042 kg/cm^2 , 0.6 psi) of pressure in EVAP system.**

NOTE:

- Do not start engine.
- Improper installation of EVAP service port adapter to the EVAP service port may cause a leak.

WITH CONSULT-II

1. Attach the EVAP service port adapter securely to the EVAP service port.
2. Also attach the pressure pump and hose to the EVAP service port adapter.
3. Turn ignition switch ON.
4. Select the “EVAP SYSTEM CLOSE” of “WORK SUPPORT MODE” with CONSULT-II.
5. Touch “START”. A bar graph (Pressure indicating display) will appear on the screen.

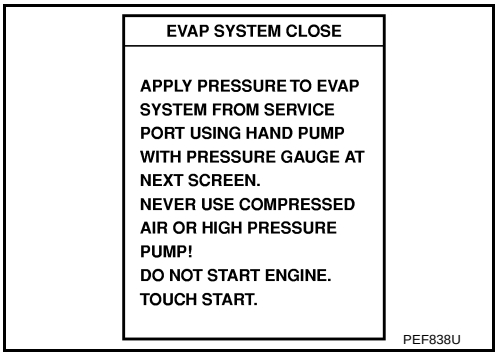

6. Apply positive pressure to the EVAP system until the pressure indicator reaches the middle of the bar graph.
7. Remove EVAP service port adapter and hose with pressure pump.

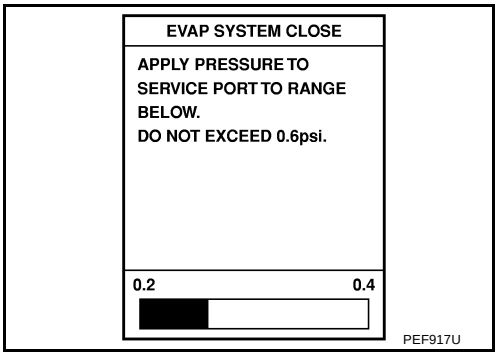

8. Locate the leak using a leak detector. Refer to EC-731, "EVAPORATIVE EMISSION LINE DRAWING" .

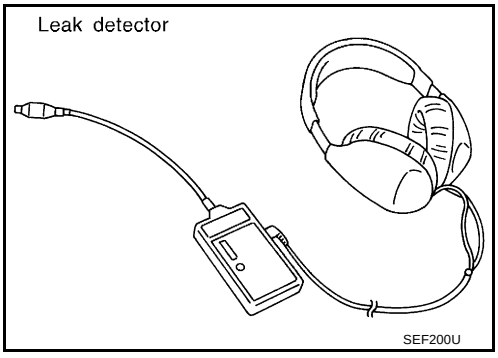

WITHOUT CONSULT-II

1. Attach the EVAP service port adapter securely to the EVAP service port.
2. Also attach the pressure pump with pressure gauge to the EVAP service port adapter.

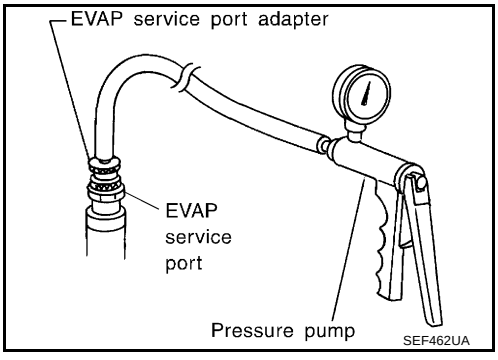

3. Apply battery voltage between the terminals of EVAP canister vent control valve to make a closed EVAP system.

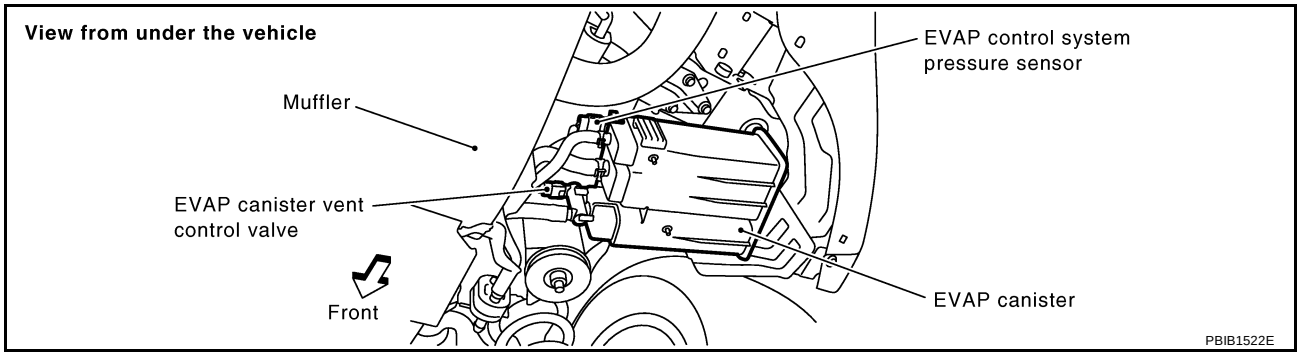

4. To locate the leak, deliver positive pressure to the EVAP system until pressure gauge points reach 1.38 to 2.76 kPa (0.014 to 0.028 kg/cm^2 , 0.2 to 0.4 psi).
5. Remove EVAP service port adapter and hose with pressure pump.
6. Locate the leak using a leak detector. Refer to EC-731, "EVAPORATIVE EMISSION LINE DRAWING" .

ON BOARD REFUELING VAPOR RECOVERY (ORVR)

PFP:00032

System Description

ABS007XX

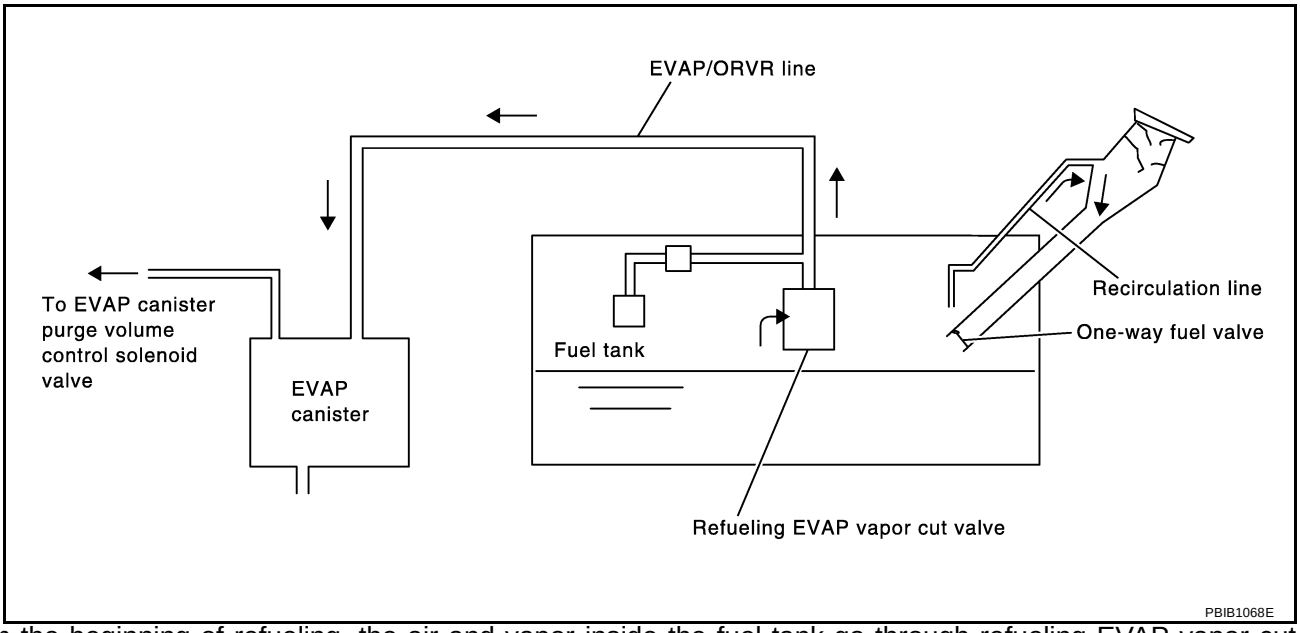

From the beginning of refueling, the air and vapor inside the fuel tank go through refueling EVAP vapor cut valve and EVAP/ORVR line to the EVAP canister. The vapor is absorbed by the EVAP canister and the air is released to the atmosphere.

When the refueling has reached the full level of the fuel tank, the refueling EVAP vapor cut valve is closed and refueling is stopped because of auto shut-off. The vapor which was absorbed by the EVAP canister is purged during driving.

WARNING:

When conducting inspections below, be sure to observe the following:

- **Put a “CAUTION: INFLAMMABLE” sign in workshop.**
- **Do not smoke while servicing fuel system. Keep open flames and sparks away from work area.**
- **Be sure to furnish the workshop with a CO_2 fire extinguisher.**

CAUTION:

- **Before removing fuel line parts, carry out the following procedures:**
  - **Put drained fuel in an explosion-proof container and put lid on securely.**
  - **Release fuel pressure from fuel line. Refer to EC-789, "FUEL PRESSURE RELEASE" .**
  - **Disconnect battery ground cable.**
- **Always replace O-ring when the fuel gauge retainer is removed.**
- **Do not kink or twist hose and tube when they are installed.**
- **Do not tighten hose and clamps excessively to avoid damaging hoses.**
- **After installation, run engine and check for fuel leaks at connection.**
- **Do not attempt to top off the fuel tank after the fuel pump nozzle shuts off automatically. Continued refueling may cause fuel overflow, resulting in fuel spray and possibly a fire.**

Diagnostic Procedure

ABS007XY

SYMPTOM: FUEL ODOR FROM EVAP CANISTER IS STRONG.

1. CHECK EVAP CANISTER

1. Remove EVAP canister with EVAP canister vent control valve and EVAP control system pressure sensor attached.
2. Weigh the EVAP canister with EVAP canister vent control valve and EVAP control system pressure sensor attached.
   The weight should be less than 2.1 kg (4.6 lb).

OK or NG

OK >> GO TO 2.
NG >> GO TO 3.

2. CHECK IF EVAP CANISTER SATURATED WITH WATER

Does water drain from the EVAP canister?

Yes or No

Yes >> GO TO 3.
No >> GO TO 5.

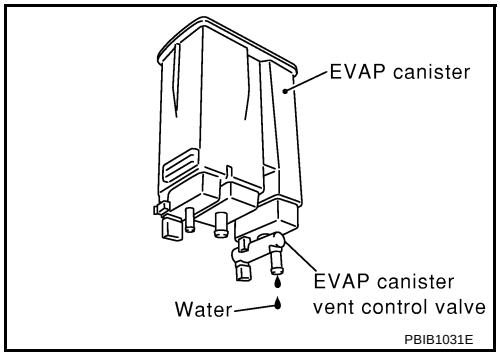

3. REPLACE EVAP CANISTER

Replace EVAP canister with a new one.

>> GO TO 4.

4. DETECT MALFUNCTIONING PART

Check the EVAP hose between EVAP canister and vehicle frame for clogging or poor connection.

>> Repair or replace EVAP hose.

5. CHECK REFUELING EVAP VAPOR CUT VALVE

Refer to EC-740, "Component Inspection" .

OK or NG

OK >> **INSPECTION END**
NG >> Replace refueling EVAP vapor cut valve with fuel tank.

SYMPTOM: CANNOT REFUEL/FUEL ODOR FROM THE FUEL FILLER OPENING IS STRONG WHILE REFUELING.

1. CHECK EVAP CANISTER

1. Remove EVAP canister with EVAP canister vent control valve and EVAP control system pressure sensor attached.
2. Weigh the EVAP canister with EVAP canister vent control valve and EVAP control system pressure sensor attached.
   The weight should be less than 2.1 kg (4.6 lb).

OK or NG

OK >> GO TO 2.
NG >> GO TO 3.

2. CHECK IF EVAP CANISTER SATURATED WITH WATER

Does water drain from the EVAP canister?

Yes or No

Yes >> GO TO 3.
No >> GO TO 5.

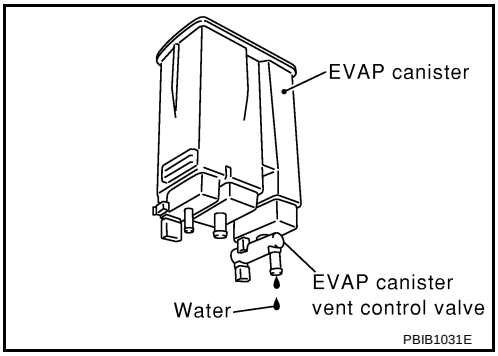

3. REPLACE EVAP CANISTER

Replace EVAP canister with a new one.

>> GO TO 4.

4. DETECT MALFUNCTIONING PART

Check the EVAP hose between EVAP canister and vehicle frame for clogging or poor connection.

>> Repair or replace EVAP hose.

5. CHECK VENT HOSES AND VENT TUBES

Check hoses and tubes between EVAP canister and refueling control valve for clogging, kink, looseness and improper connection.

OK or NG

OK >> GO TO 6.
NG >> Repair or replace hoses and tubes.

6. CHECK FILLER NECK TUBE

Check recirculation line for clogging, dents and cracks.

OK or NG

OK >> GO TO 7.
NG >> Replace filler neck tube.

7. CHECK REFUELING EVAP VAPOR CUT VALVE

Refer to EC-740, "Component Inspection" .

OK or NG

OK >> GO TO 8.
NG >> Replace refueling EVAP vapor cut valve with fuel tank.

8. CHECK FUEL FILLER TUBE

Check filler neck tube and hose connected to the fuel tank for clogging, dents and cracks.

OK or NG

OK >> GO TO 9.
NG >> Replace fuel filler tube.

9. CHECK ONE-WAY FUEL VALVE-I

Check one-way valve for clogging.

OK or NG

OK >> GO TO 10.
NG >> Repair or replace one-way fuel valve with fuel tank.

10. CHECK ONE-WAY FUEL VALVE-II

1. Make sure that fuel is drained from the tank.
2. Remove fuel filler tube and hose.
3. Check one-way fuel valve for operation as follows.
   When a stick is inserted, the valve should open, when removing stick it should close.
   Do not drop any material into the tank.

OK or NG

OK >> **INSPECTION END**
NG >> Replace fuel filler tube or replace one-way fuel valve with fuel tank.

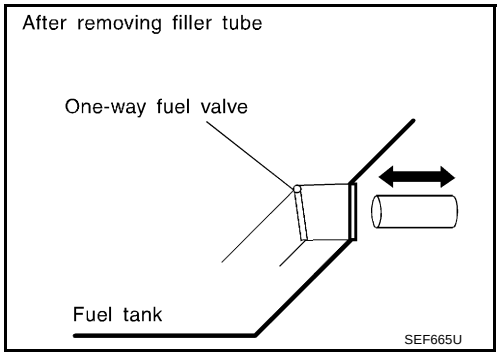

Component Inspection

ABS007XZ

REFUELING EVAP VAPOR CUT VALVE

With CONSULT-II

1. Remove fuel tank. Refer to FL-10, "FUEL TANK" .
2. Drain fuel from the tank as follows:

a. Remove fuel feed hose located on the fuel gauge retainer.
b. Connect a spare fuel hose, one side to fuel gauge retainer where the hose was removed and the other side to a fuel container.
c. Drain fuel using “FUEL PUMP RELAY” in “ACTIVE TEST” mode with CONSULT-II.

3. Check refueling EVAP vapor cut valve for being stuck to close as follows.
   Blow air into the refueling EVAP vapor cut valve (from the end of EVAP/ORVR line hose), and check that the air flows freely into the tank.
4. Check refueling EVAP vapor cut valve for being stuck to open as follows.

a. Connect vacuum pump to hose end.
b. Remove fuel gauge retainer with fuel gauge unit.
   Always replace O-ring with new one.
c. Put fuel tank upside down.

d. Apply vacuum pressure to hose end [–13.3 kPa (–100 mmHg, –3.94 inHg)] with fuel gauge retainer remaining open and check that the pressure is applicable.

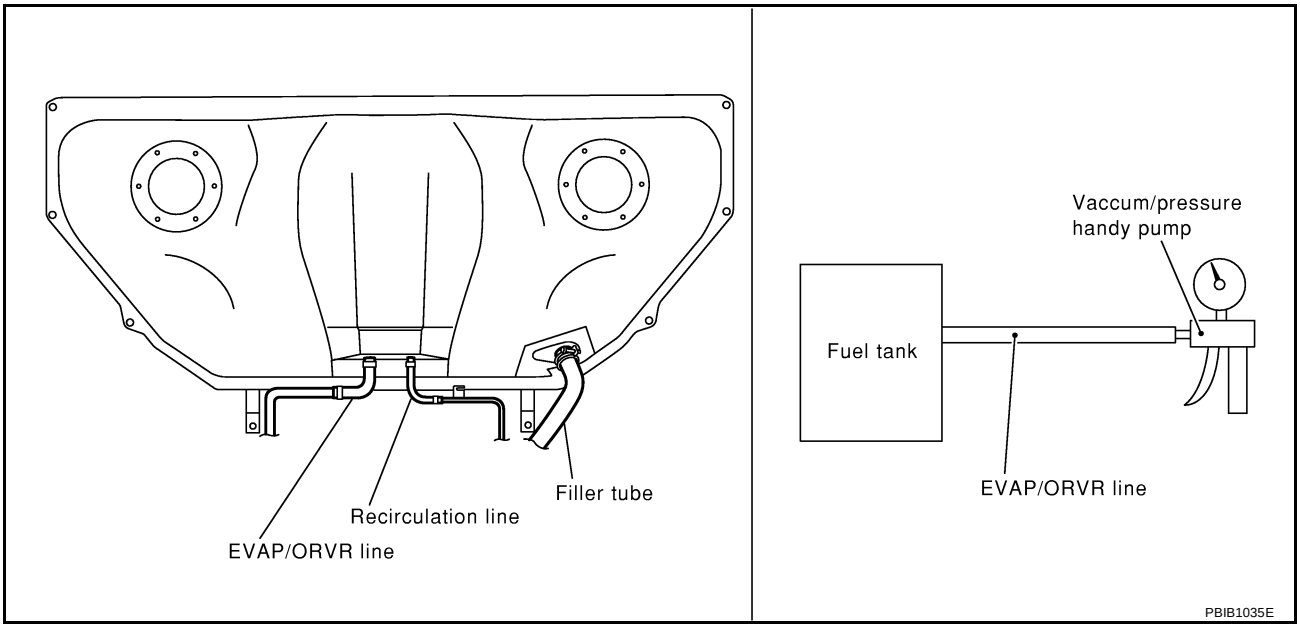

Without CONSULT-II

1. Remove fuel tank. Refer to FL-10, "FUEL TANK" .
2. Drain fuel from the tank as follows:

a. Remove fuel gauge retainer.

b. Drain fuel from the tank using a handy pump into a fuel container.

3. Check refueling EVAP vapor cut valve for being stuck to close as follows.
Blow air into the refueling EVAP vapor cut valve (from the end of EVAP/ORVR line hose), and check that the air flows freely into the tank.
4. Check refueling EVAP vapor cut valve for being stuck to open as follows.

a. Connect vacuum pump to hose end.

b. Remove fuel gauge retainer with fuel gauge unit.
Always replace O-ring with new one.

c. Put fuel tank upside down.

d. Apply vacuum pressure to hose end [–13.3 kPa (–100 mmHg, –3.94 inHg)] with fuel gauge retainer remaining open and check that the pressure is applicable.

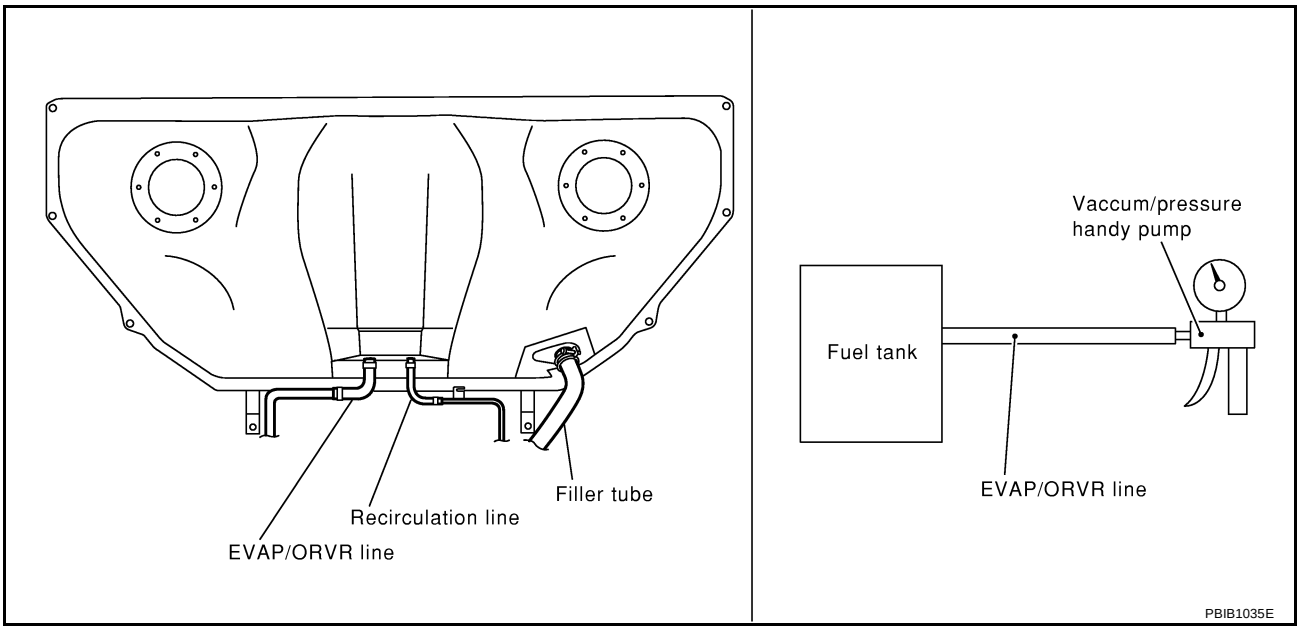

POSITIVE CRANKCASE VENTILATION

PFP:11810

Description

ABS007Y0

SYSTEM DESCRIPTION

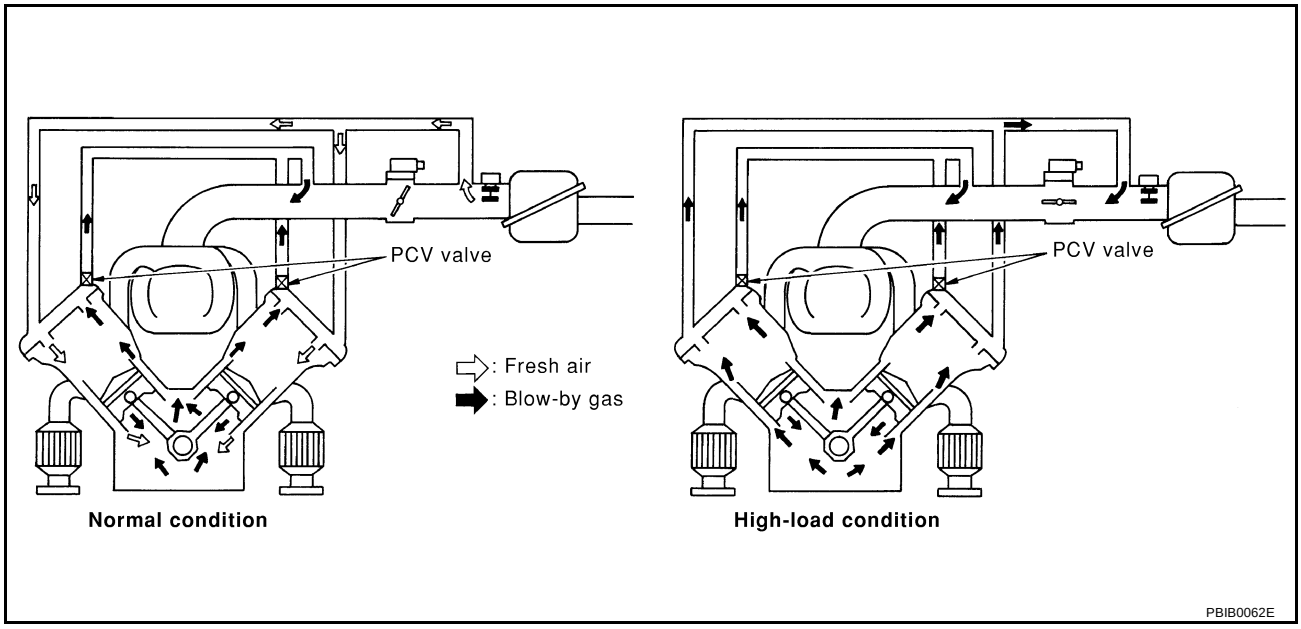

This system returns blow-by gas to the intake manifold.
The positive crankcase ventilation (PCV) valve is provided to conduct crankcase blow-by gas to the intake manifold.
During partial throttle operation of the engine, the intake manifold sucks the blow-by gas through the PCV valve.
Normally, the capacity of the valve is sufficient to handle any blow-by and a small amount of ventilating air.
The ventilating air is then drawn from the air inlet tubes into the crankcase. In this process the air passes through the hose connecting air inlet tubes to rocker cover.
Under full-throttle condition, the manifold vacuum is insufficient to draw the blow-by flow through the valve. The flow goes through the hose connection in the reverse direction.
On vehicles with an excessively high blow-by, the valve does not meet the requirement. This is because some of the flow will go through the hose connection to the air inlet tubes under all conditions.

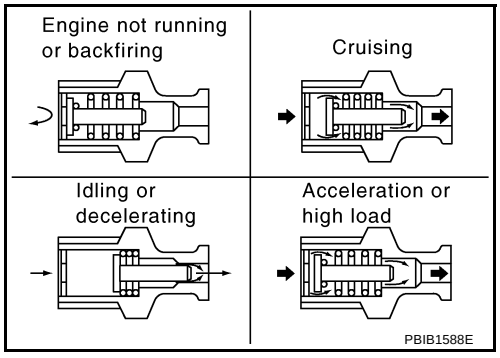

Component Inspection

ABS007Y1

PCV (POSITIVE CRANKCASE VENTILATION) VALVE

With engine running at idle, remove PCV valve from rocker cover. A properly working valve makes a hissing noise as air passes through it. A strong vacuum should be felt immediately when a finger is placed over valve inlet.

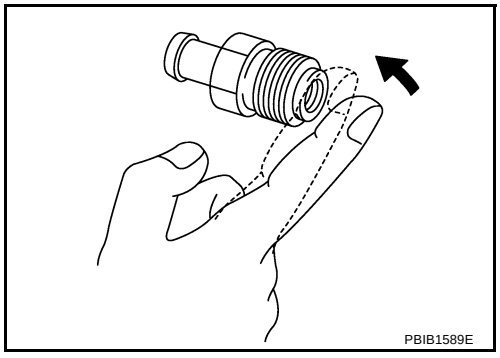

PCV VALVE VENTILATION HOSE

1. Check hoses and hose connections for leaks.
2. Disconnect all hoses and clean with compressed air. If any hose cannot be freed of obstructions, replace.

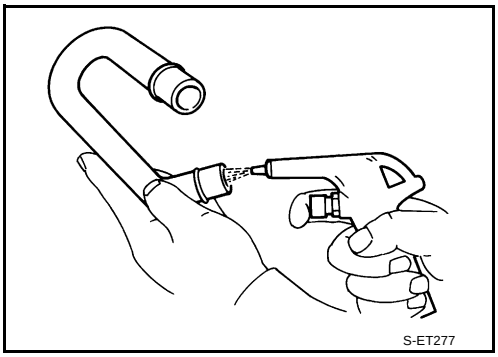

IVIS (INFINITI VEHICLE IMMOBILIZER SYSTEM-NATS)

PFP:28591

Description

ABS00E46

- **If the security indicator lights up with the ignition switch in the ON position or "NATS MALFUNCTION" is displayed on "SELF-DIAG RESULTS" screen, perform self-diagnostic results mode with CONSULT-II using NATS program card. Refer to BL-213, "IVIS (INFINITI VEHICLE IMMOBILIZER SYSTEM-NATS)" .**
- **Confirm no self-diagnostic results of IVIS (NATS) is displayed before touching "ERASE" in "SELF-DIAG RESULTS" mode with CONSULT-II.**
- **When replacing ECM, initialization of IVIS (NATS) system and registration of all IVIS (NATS) ignition key IDs must be carried out with CONSULT-II using NATS program card.**
  Therefore, be sure to receive all keys from vehicle owner. Regarding the procedures of IVIS (NATS) initialization and IVIS (NATS) ignition key ID registration, refer to CONSULT-II operation manual, IVIS/NVIS.

SELF DIAG RESULTS	
DTC RESULTS	TIME
NATS MALFUNCTION [P1610]	0

SEF543X

ON BOARD DIAGNOSTIC (OBD) SYSTEM

PFP:00028

Introduction

ABS00E47

The ECM has an on board diagnostic system, which detects malfunctions related to engine sensors or actuators. The ECM also records various emission-related diagnostic information including:

Emission-related diagnostic information	Diagnostic service
Diagnostic Trouble Code (DTC)	Service $03 of SAE J1979
Freeze Frame data	Service $02 of SAE J1979
System Readiness Test (SRT) code	Service $01 of SAE J1979
1st Trip Diagnostic Trouble Code (1st Trip DTC)	Service $07 of SAE J1979
1st Trip Freeze Frame data	
Test values and Test limits	Service $06 of SAE J1979
Calibration ID	Service $09 of SAE J1979

The above information can be checked using procedures listed in the table below.

×: Applicable —: Not applicable

	DTC	1st trip DTC	Freeze Frame data	1st trip Freeze Frame data	SRT code	SRT status	Test value
CONSULT-II	×	×	×	×	×	×	—
GST	×	×	×	—	×	×	×
ECM	×	×*	—	—	—	×	—

*: When DTC and 1st trip DTC simultaneously appear on the display, they cannot be clearly distinguished from each other.

The malfunction indicator lamp (MIL) on the instrument panel lights up when the same malfunction is detected in two consecutive trips (Two trip detection logic), or when the ECM enters fail-safe mode. (Refer to EC-799 .)

Two Trip Detection Logic

ABS00E48

When a malfunction is detected for the first time, 1st trip DTC and 1st trip Freeze Frame data are stored in the ECM memory. The MIL will not light up at this stage. <1st trip>
If the same malfunction is detected again during the next drive, the DTC and Freeze Frame data are stored in the ECM memory, and the MIL lights up. The MIL lights up at the same time when the DTC is stored. <2nd trip> The “trip” in the “Two Trip Detection Logic” means a driving mode in which self-diagnosis is performed during vehicle operation. Specific on board diagnostic items will cause the ECM to light up or blink the MIL, and store DTC and Freeze Frame data, even in the 1st trip, as shown below.

×: Applicable —: Not applicable

Items	MIL				DTC		1st trip DTC	
	1st trip		2nd trip		1st trip displaying	2nd trip displaying	1st trip displaying	2nd trip displaying
	Blinking	Lighting up	Blinking	Lighting up				
Misfire (Possible three way catalyst damage) — DTC: P0300 - P0308 is being detected	×	—	—	—	—	—	×	—
Misfire (Possible three way catalyst damage) — DTC: P0300 - P0308 is being detected	—	—	×	—	—	×	—	—
One trip detection diagnoses (Refer to EC-746 .)	—	×	—	—	×	—	—	—
Except above	—	—	—	×	—	×	×	—

When there is an open circuit on MIL circuit, the ECM cannot warn the driver by lighting up MIL when there is malfunction on engine control system.
Therefore, when electrical controlled throttle and part of ECM related diagnoses are continuously detected as NG for 5 trips, ECM warns the driver that engine control system malfunctions and MIL circuit is open by means of operating fail-safe function.

The fail-safe function also operates when above diagnoses except MIL circuit are detected and demands the driver to repair the malfunction.

Engine operating condition in fail-safe mode	Engine speed will not rise more than 2,500 rpm due to the fuel cut

Emission-Related Diagnostic Information

ABS00E49

EMISSION-RELATED DIAGNOSTIC INFORMATION ITEMS

×: Applicable —: Not applicable

Items (CONSULT-II screen terms)	DTC*1		SRT code	Test value/ Test limit (GST only)	Trip	MIL	Reference page
	CONSULT-II GST*2	ECM*3					
CAN COMM CIRCUIT	U1000	1000*4	—	—	1	× or —	EC-862
CAN COMM CIRCUIT	U1001	1001*4	—	—	2	—	EC-862
NO DTC IS DETECTED. FURTHER TESTING MAY BE REQUIRED.	**P0000**	**0000**	—	—	—	**Flashing***7 *8	—
INT/V TIM CONT-B1	P0011	0011	—	—	2	×	EC-865
INT/V TIM CONT-B2	P0021	0021	—	—	2	×	EC-865
HO2S1 HTR (B1)	P0031	0031	×	×	2	×	EC-877
HO2S1 HTR (B1)	P0032	0032	×	×	2	×	EC-877
HO2S2 HTR (B1)	P0037	0037	×	×	2	×	EC-885
HO2S2 HTR (B1)	P0038	0038	×	×	2	×	EC-885
HO2S1 HTR (B2)	P0051	0051	×	×	2	×	EC-877
HO2S1 HTR (B2)	P0052	0052	×	×	2	×	EC-877
HO2S2 HTR (B2)	P0057	0057	×	×	2	×	EC-885
HO2S2 HTR (B2)	P0058	0058	×	×	2	×	EC-885
MAF SEN/CIRCUIT	P0101	0101	—	—	2	×	EC-893
MAF SEN/CIRCUIT	P0102	0102	—	—	1	×	EC-902
MAF SEN/CIRCUIT	P0103	0103	—	—	1	×	EC-902
IAT SEN/CIRCUIT	P0112	0112	—	—	2	×	EC-909
IAT SEN/CIRCUIT	P0113	0113	—	—	2	×	EC-909
ECT SEN/CIRCUIT	P0117	0117	—	—	1	×	EC-914
ECT SEN/CIRCUIT	P0118	0118	—	—	1	×	EC-914
TP SEN 2/CIRC	P0122	0122	—	—	1	×	EC-920
TP SEN 2/CIRC	P0123	0123	—	—	1	×	EC-920
ECT SENSOR	P0125	0125	—	—	1	×	EC-927
IAT SENSOR	P0127	0127	—	—	2	×	EC-930
THERMSTAT FNCTN	P0128	0128	—	—	2	×	EC-933
HO2S1 (B1)	P0132	0132	—	×	2	×	EC-935
HO2S1 (B1)	P0133	0133	×	×	2	×	EC-944
HO2S1 (B1)	P0134	0134	—	×	2	×	EC-956
HO2S2 (B1)	P0138	0138	—	×	2	×	EC-966
HO2S2 (B1)	P0139	0139	×	×	2	×	EC-975
HO2S1 (B2)	P0152	0152	—	×	2	×	EC-935
HO2S1 (B2)	P0153	0153	×	×	2	×	EC-944
HO2S1 (B2)	P0154	0154	—	×	2	×	EC-956
HO2S2 (B2)	P0158	0158	—	×	2	×	EC-966
HO2S2 (B2)	P0159	0159	×	×	2	×	EC-975

Items (CONSULT-II screen terms)	DTC*1		SRT code	Test value/ Test limit (GST only)	Trip	MIL	Reference page
	CONSULT-II GST*2	ECM*3					
FUEL SYS-LEAN-B1	P0171	0171	—	—	2	×	EC-986
FUEL SYS-RICH-B1	P0172	0172	—	—	2	×	EC-995
FUEL SYS-LEAN-B2	P0174	0174	—	—	2	×	EC-986
FUEL SYS-RICH-B2	P0175	0175	—	—	2	×	EC-995
FTT SENSOR	P0181	0181	—	—	2	×	EC-1004
FTT SEN/CIRCUIT	P0182	0182	—	—	2	×	EC-1010
FTT SEN/CIRCUIT	P0183	0183	—	—	2	×	EC-1010
TP SEN 1/CIRC	P0222	0222	—	—	1	×	EC-1015
TP SEN 1/CIRC	P0223	0223	—	—	1	×	EC-1015
MULTI CYL MISFIRE	P0300	0300	—	—	2	×	EC-1022
CYL 1 MISFIRE	P0301	0301	—	—	2	×	EC-1022
CYL 2 MISFIRE	P0302	0302	—	—	2	×	EC-1022
CYL 3 MISFIRE	P0303	0303	—	—	2	×	EC-1022
CYL 4 MISFIRE	P0304	0304	—	—	2	×	EC-1022
CYL 5 MISFIRE	P0305	0305	—	—	2	×	EC-1022
CYL 6 MISFIRE	P0306	0306	—	—	2	×	EC-1022
CYL 7 MISFIRE	P0307	0307	—	—	2	×	EC-1022
CYL 8 MISFIRE	P0308	0308	—	—	2	×	EC-1022
KNOCK SEN/CIRC-B1	P0327	0327	—	—	2	—	EC-1031
KNOCK SEN/CIRC-B1	P0328	0328	—	—	2	—	EC-1031
KNOCK SEN/CIRC-B2	P0332	0332	—	—	2	—	EC-1031
KNOCK SEN/CIRC-B2	P0333	0333	—	—	2	—	EC-1031
CKP SEN/CIRCUIT	P0335	0335	—	—	2	×	EC-1036
CMP SEN/CIRC-B1	P0340	0340	—	—	2	×	EC-1043
TW CATALYST SYS-B1	P0420	0420	×	×	2	×	EC-1050
TW CATALYST SYS-B2	P0430	0430	×	×	2	×	EC-1050
EVAP PURG FLOW/MON	P0441	0441	×	×	2	×	EC-1056
EVAP SMALL LEAK	P0442	0442	×	×	2	×	EC-1061
PURG VOLUME CONT/V	P0444	0444	—	—	2	×	EC-1069
PURG VOLUME CONT/V	P0445	0445	—	—	2	×	EC-1069
VENT CONTROL VALVE	P0447	0447	—	—	2	×	EC-1076
EVAP SYS PRES SEN	P0451	0451	—	—	2	×	EC-1083
EVAP SYS PRES SEN	P0452	0452	—	—	2	×	EC-1086
EVAP SYS PRES SEN	P0453	0453	—	—	2	×	EC-1092
EVAP GROSS LEAK	P0455	0455	—	—	2	×	EC-1100
EVAP VERY SML LEAK	P0456	0456	×*5	×	2	×	EC-1108
FUEL LEV SEN SLOSH	P0460	0460	—	—	2	×	EC-1117
FUEL LEVEL SENSOR	P0461	0461	—	—	2	×	EC-1119
FUEL LEVL SEN/CIRC	P0462	0462	—	—	2	×	EC-1121
FUEL LEVL SEN/CIRC	P0463	0463	—	—	2	×	EC-1121
VEH SPEED SEN/CIRC*6	P0500	0500	—	—	2	×	EC-1123
ISC SYSTEM	P0506	0506	—	—	2	×	EC-1125

Items (CONSULT-II screen terms)	DTC*1		SRT code	Test value/ Test limit (GST only)	Trip	MIL	Reference page
	CONSULT-II GST*2	ECM*3					
ISC SYSTEM	P0507	0507	—	—	2	×	EC-1127
PW ST P SEN/CIRC	P0550	0550	—	—	2	—	EC-1129
ECM	P0605	0605	—	—	1 or 2	× or —	EC-1134
TCM	P0700	0700	—	—	1	×	AT-113
PNP SW/CIRC	P0705	0705	—	—	2	×	AT-114
ATF TEMP SEN/CIRC	P0710	0710	—	—	2	×	AT-136
VEH SPD SEN/CIR AT*7	P0720	0720	—	—	2	×	AT-118
TCC SOLENOID/CIRC	P0740	0740	—	—	2	×	AT-125
A/T TCC S/V FNCTN	P0744	0744	—	—	2	×	AT-127
L/PRESS SOL/CIRC	P0745	0745	—	—	2	×	AT-129
ECM BACK UP/CIRC	P1065	1065	—	—	2	×	EC-1137
INT/V TIM V/CIR-B1	P1111	1111	—	—	2	×	EC-1141
ETC ACTR	P1121	1121	—	—	1	×	EC-1148
ETC FUNCTION/CIRC	P1122	1122	—	—	1	×	EC-1150
ETC MOT PWR	P1124	1124	—	—	1	×	EC-1156
ETC MOT PWR	P1126	1126	—	—	1	×	EC-1156
ETC MOT	P1128	1128	—	—	1	×	EC-1161
INT/V TIM V/CIR-B2	P1136	1136	—	—	2	×	EC-1141
INTK TIM S/CIRC-B1	P1140	1140	—	—	2	×	EC-1166
HO2S1 (B1)	P1143	1143	×	×	2	×	EC-1174
HO2S1 (B1)	P1144	1144	×	×	2	×	EC-1180
INTK TIM S/CIRC-B2	P1145	1145	—	—	2	×	EC-1166
HO2S2 (B1)	P1146	1146	×	×	2	×	EC-1187
HO2S2 (B1)	P1147	1147	×	×	2	×	EC-1198
CLOSED LOOP-B1	P1148	1148	—	—	1	×	EC-1209
HO2S1 (B2)	P1163	1163	×	×	2	×	EC-1174
HO2S1 (B2)	P1164	1164	×	×	2	×	EC-1180
HO2S2 (B2)	P1166	1166	×	×	2	×	EC-1187
HO2S2 (B2)	P1167	1167	×	×	2	×	EC-1198
CLOSED LOOP-B2	P1168	1168	—	—	1	×	EC-1209
TCS C/U FUNCTN	P1211	1211	—	—	2	—	EC-1211
TCS/CIRC	P1212	1212	—	—	2	—	EC-1212
ENG OVER TEMP	P1217	1217	—	—	1	×	EC-1213
CTP LEARNING	P1225	1225	—	—	2	—	EC-1225
CTP LEARNING	P1226	1226	—	—	2	—	EC-1227
SENSOR POWER/CIRC	P1229	1229	—	—	1	×	EC-1229
PURG VOLUME CONT/V	P1444	1444	—	—	2	×	EC-1233
VENT CONTROL VALVE	P1446	1446	—	—	2	×	EC-1241
ASCD SW	P1564	1564	—	—	1	—	EC-1247 (Models with ICC) EC-1254 (Models with ASCD)

Items (CONSULT-II screen terms)	DTC*1		SRT code	Test value/ Test limit (GST only)	Trip	MIL	Reference page
	CONSULT-II GST*2	ECM*3					
ACC COMMAND VALUE*9	P1568	1568	—	—	1	—	EC-1261
ASCD BRAKE SW	P1572	1572	—	—	1	—	EC-1262 (Models with ICC) EC-1271 (Models with ASCD)
ASCD VHL SPD SEN	P1574	1574	—	—	1	—	EC-1279 (Models with ICC) EC-1281 (Models with ASCD)
NATS MALFUNCTION	P1610 - P1615	1610 - 1615	—	—	2	—	EC-744
P-N POS SW/CIRCUIT	P1706	1706	—	—	2	×	EC-1283
TURBINE REV S/CIRC	P1716	1716	—	—	2	×	AT-141
V/SP SEN(A/T OUT)	P1720	1720	—	—	2	—	EC-1288
A/T INTERLOCK	P1730	1730	—	—	1	×	AT-145
I/C SOLENOID/CIRC	P1752	1752	—	—	1	×	AT-150
I/C SOLENOID FNCTN	P1754	1754	—	—	1	×	AT-152
FR/B SOLENOID/CIRC	P1757	1757	—	—	1	×	AT-154
FR/B SOLENOID FNCT	P1759	1759	—	—	1	×	AT-156
D/C SOLENOID/CIRC	P1762	1762	—	—	1	×	AT-158
D/C SOLENOID FNCTN	P1764	1764	—	—	1	×	AT-160
HLR/C SOL/CIRC	P1767	1767	—	—	1	×	AT-162
HLR/C SOL FNCTN	P1769	1769	—	—	1	×	AT-164
LC/B SOLENOID/CIRC	P1772	1772	—	—	1	×	AT-166
LC/B SOLENOID FNCT	P1774	1774	—	—	1	×	AT-168
SHIFT SIG FNCTN	P1780	1780	—	—	2	—	EC-1290
VIAS S/V CIRC	P1800	1800	—	—	2	—	EC-1292
BRAKE SW/CIRCUIT	P1805	1805	—	—	2	—	EC-1297
APP SEN 1/CIRC	P2122	2122	—	—	1	×	EC-1302
APP SEN 1/CIRC	P2123	2123	—	—	1	×	EC-1302
APP SEN 2/CIRC	P2127	2127	—	—	1	×	EC-1309
APP SEN 2/CIRC	P2128	2128	—	—	1	×	EC-1309
TP SENSOR	P2135	2135	—	—	1	×	EC-1316
APP SENSOR	P2138	2138	—	—	1	×	EC-1323

*1: 1st trip DTC No. is the same as DTC No.
*2: This number is prescribed by SAE J2012.
*3: In Diagnostic Test Mode II (Self-diagnostic results), this number is controlled by NISSAN.
*4: The trouble shooting for this DTC needs CONSULT-II.
*5: SRT code will not be set it the self-diagnostic result is NG.
*6: When the fail-safe operations for both self-diagnoses occur at the same time, the MIL illuminates.
*7: When engine is running, MIL may flash. For the details, refer to EC-761, "MIL Flashing Without DTC" .
*8: When the ECM is in the mode of displaying SRT status, MIL may flash. For the details, refer to EC-754, "How to Display SRT Status" .
*9: Models with ICC.

DTC AND 1ST TRIP DTC

The 1st trip DTC (whose number is the same as the DTC number) is displayed for the latest self-diagnostic result obtained. If the ECM memory was cleared previously, and the 1st trip DTC did not reoccur, the 1st trip DTC will not be displayed.
If a malfunction is detected during the 1st trip, the 1st trip DTC is stored in the ECM memory. The MIL will not light up (two trip detection logic). If the same malfunction is not detected in the 2nd trip (meeting the required driving pattern), the 1st trip DTC is cleared from the ECM memory. If the same malfunction is detected in the 2nd trip, both the 1st trip DTC and DTC are stored in the ECM memory and the MIL lights up. In other words, the DTC is stored in the ECM memory and the MIL lights up when the same malfunction occurs in two consecutive trips. If a 1st trip DTC is stored and a non-diagnostic operation is performed between the 1st and 2nd trips, only the 1st trip DTC will continue to be stored. For malfunctions that blink or light up the MIL during the 1st trip, the DTC and 1st trip DTC are stored in the ECM memory.
Procedures for clearing the DTC and the 1st trip DTC from the ECM memory are described in EC-758, "HOW TO ERASE EMISSION-RELATED DIAGNOSTIC INFORMATION" .
For malfunctions in which 1st trip DTCs are displayed, refer to EC-746, "EMISSION-RELATED DIAGNOSTIC INFORMATION ITEMS" . These items are required by legal regulations to continuously monitor the system/component. In addition, the items monitored non-continuously are also displayed on CONSULT-II.
1st trip DTC is specified in Service $07 of SAE J1979. 1st trip DTC detection occurs without lighting up the MIL and therefore does not warn the driver of a malfunction. However, 1st trip DTC detection will not prevent the vehicle from being tested, for example during Inspection/Maintenance (I/M) tests.
When a 1st trip DTC is detected, check, print out or write down and erase (1st trip) DTC and Freeze Frame data as specified in Work Flow procedure Step II, refer to EC-792, "WORK FLOW" . Then perform DTC Confirmation Procedure or Overall Function Check to try to duplicate the malfunction. If the malfunction is duplicated, the item requires repair.

How to Read DTC and 1st Trip DTC

DTC and 1st trip DTC can be read by the following methods.

With CONSULT-II

With GST

CONSULT-II or GST (Generic Scan Tool) Examples: P0340, P1148, P1706, etc.
These DTCs are prescribed by SAE J2012.
(CONSULT-II also displays the malfunctioning component or system.)

No Tools

The number of blinks of the MIL in the Diagnostic Test Mode II (Self-Diagnostic Results) indicates the DTC. Example: 0340, 1148, 1706, etc.
These DTCs are controlled by NISSAN.

- **1st trip DTC No. is the same as DTC No.**
- **Output of a DTC indicates a malfunction. However, GST or the Diagnostic Test Mode II do not indicate whether the malfunction is still occurring or has occurred in the past and has returned to normal. CONSULT-II can identify malfunction status as shown below. Therefore, using CONSULT-II (if available) is recommended.**

A sample of CONSULT-II display for DTC and 1st trip DTC is shown below. DTC or 1st trip DTC of a malfunction is displayed in “SELF-DIAGNOSTIC RESULTS” mode of CONSULT-II. Time data indicates how many times the vehicle was driven after the last detection of a DTC.
If the DTC is being detected currently, the time data will be [0].
If a 1st trip DTC is stored in the ECM, the time data will be [1t].

DTC display

SELF DIAG RESULTS	
DTC RESULTS	TIME
CKP SEN/CIRCUIT [P0335]	0

1st trip DTC display

SELF DIAG RESULTS	
DTC RESULTS	TIME
CKP SEN/CIRCUIT [P0335]	1t

PBIB0911E

FREEZE FRAME DATA AND 1ST TRIP FREEZE FRAME DATA

The ECM records the driving conditions such as fuel system status, calculated load value, engine coolant temperature, short term fuel trim, long term fuel trim, engine speed, vehicle speed, base fuel schedule and intake air temperature at the moment a malfunction is detected.
Data which are stored in the ECM memory, along with the 1st trip DTC, are called 1st trip freeze frame data. The data, stored together with the DTC data, are called freeze frame data and displayed on CONSULT-II or GST. The 1st trip freeze frame data can only be displayed on the CONSULT-II screen, not on the GST. For details, see EC-826, "Freeze Frame Data and 1st Trip Freeze Frame Data" .
Only one set of freeze frame data (either 1st trip freeze frame data or freeze frame data) can be stored in the ECM. 1st trip freeze frame data is stored in the ECM memory along with the 1st trip DTC. There is no priority for 1st trip freeze frame data and it is updated each time a different 1st trip DTC is detected. However, once freeze frame data (2nd trip detection/MIL on) is stored in the ECM memory, 1st trip freeze frame data is no longer stored. Remember, only one set of freeze frame data can be stored in the ECM. The ECM has the following priorities to update the data.

Priority	Items	
1	Freeze frame data	Misfire — DTC: P0300 - P0308 Fuel Injection System Function — DTC: P0171, P0172, P0174, P0175
2		Except the above items (Includes A/T related items)
3	1st trip freeze frame data	

For example, the EGR malfunction (Priority: 2) was detected and the freeze frame data was stored in the 2nd trip. After that when the misfire (Priority: 1) is detected in another trip, the freeze frame data will be updated from the EGR malfunction to the misfire. The 1st trip freeze frame data is updated each time a different malfunction is detected. There is no priority for 1st trip freeze frame data. However, once freeze frame data is stored in the ECM memory, 1st trip freeze data is no longer stored (because only one freeze frame data or 1st trip freeze frame data can be stored in the ECM). If freeze frame data is stored in the ECM memory and freeze frame data with the same priority occurs later, the first (original) freeze frame data remains unchanged in the ECM memory.
Both 1st trip freeze frame data and freeze frame data (along with the DTCs) are cleared when the ECM memory is erased. Procedures for clearing the ECM memory are described in EC-758, "HOW TO ERASE EMISSION-RELATED DIAGNOSTIC INFORMATION" .

SYSTEM READINESS TEST (SRT) CODE

System Readiness Test (SRT) code is specified in Service $01 of SAE J1979.
As part of an enhanced emissions test for Inspection & Maintenance (I/M), certain states require the status of SRT be used to indicate whether the ECM has completed self-diagnosis of major emission systems and components. Completion must be verified in order for the emissions inspection to proceed.
If a vehicle is rejected for a State emissions inspection due to one or more SRT items indicating “INCMP”, use the information in this Service Manual to set the SRT to “CMPLT”.
In most cases the ECM will automatically complete its self-diagnosis cycle during normal usage, and the SRT status will indicate “CMPLT” for each application system. Once set as “CMPLT”, the SRT status remains “CMPLT” until the self-diagnosis memory is erased.
Occasionally, certain portions of the self-diagnostic test may not be completed as a result of the customer's normal driving pattern; the SRT will indicate “INCMP” for these items.

NOTE:
The SRT will also indicate “INCMP” if the self-diagnosis memory is erased for any reason or if the ECM memory power supply is interrupted for several hours.
If, during the state emissions inspection, the SRT indicates “CMPLT” for all test items, the inspector will continue with the emissions test. However, if the SRT indicates “INCMP” for one or more of the SRT items the vehicle is returned to the customer untested.

NOTE:
If MIL is ON during the state emissions inspection, the vehicle is also returned to the customer untested even though the SRT indicates “CMPLT” for all test items. Therefore, it is important to check SRT (“CMPLT”) and DTC (No DTCs) before the inspection.

SRT Item

The table below shows required self-diagnostic items to set the SRT to “CMPLT”.

SRT item (CONSULT-II indication)	Performance Priority*	Required self-diagnostic items to set the SRT to “CMPLT”	Corresponding DTC No.
CATALYST	2	Three way catalyst function	P0420, P0430
EVAP SYSTEM	1	EVAP control system	P0442
	2	EVAP control system	P0456
	2	EVAP control system purge flow monitoring	P0441
HO2S	2	Heated oxygen sensor 1	P0133, P0153
		Heated oxygen sensor 1	P1143, P1163
		Heated oxygen sensor 1	P1144, P1164
		Heated oxygen sensor 2	P0139, P0159
		Heated oxygen sensor 2	P1146, P1166
		Heated oxygen sensor 2	P1147, P1167
HO2S HTR	2	Heated oxygen sensor 1 heater	P0031, P0032, P0051, P0052
		Heated oxygen sensor 2 heater	P0037, P0038, P0057, P0058

*: If completion of several SRTs is required, perform driving patterns (DTC confirmation procedure), one by one based on the priority for models with CONSULT-II.

SRT Set Timing

SRT is set as “CMPLT” after self-diagnosis has been performed one or more times. Completion of SRT is done regardless of whether the result is OK or NG. The set timing is different between OK and NG results and is shown in the table below.

Self-diagnosis result		Example				
		Diagnosis	Ignition cycle ← ON → OFF	← ON → OFF	← ON → OFF	← ON →
All OK	Case 1	P0400	OK (1)	— (1)	OK (2)	— (2)
		P0402	OK (1)	— (1)	— (1)	OK (2)
		P1402	OK (1)	OK (2)	— (2)	— (2)
		SRT of EGR	“CMPLT”	“CMPLT”	“CMPLT”	“CMPLT”
	Case 2	P0400	OK (1)	— (1)	— (1)	— (1)
		P0402	— (0)	— (0)	OK (1)	— (1)
		P1402	OK (1)	OK (2)	— (2)	— (2)
		SRT of EGR	“INCMP”	“INCMP”	“CMPLT”	“CMPLT”
NG exists	Case 3	P0400	OK	OK	—	—
		P0402	—	—	—	—
		P1402	NG	—	NG	NG (Consecutive NG)
		(1st trip) DTC	1st trip DTC	—	1st trip DTC	DTC (= MIL “ON”)
		SRT of EGR	“INCMP”	“INCMP”	“INCMP”	“CMPLT”

OK: Self-diagnosis is carried out and the result is OK.
NG: Self-diagnosis is carried out and the result is NG.
—: Self-diagnosis is not carried out.

When all SRT related self-diagnoses showed OK results in a single cycle (Ignition OFF-ON-OFF), the SRT will indicate “CMPLT”. → Case 1 above
When all SRT related self-diagnoses showed OK results through several different cycles, the SRT will indicate “CMPLT” at the time the respective self-diagnoses have at least one OK result. → Case 2 above

If one or more SRT related self-diagnoses showed NG results in 2 consecutive cycles, the SRT will also indicate “CMPLT”. → Case 3 above

The table above shows that the minimum number of cycles for setting SRT as “INCMP” is one (1) for each self-diagnosis (Case 1 & 2) or two (2) for one of self-diagnoses (Case 3). However, in preparation for the state emissions inspection, it is unnecessary for each self-diagnosis to be executed twice (Case 3) for the following reasons:

- The SRT will indicate “CMPLT” at the time the respective self-diagnoses have one (1) OK result.
- The emissions inspection requires “CMPLT” of the SRT only with OK self-diagnosis results.
- When, during SRT driving pattern, 1st trip DTC (NG) is detected prior to “CMPLT” of SRT, the self-diagnosis memory must be erased from ECM after repair.
- If the 1st trip DTC is erased, all the SRT will indicate “INCMP”.

  NOTE:
  SRT can be set as “CMPLT” together with the DTC(s). Therefore, DTC check must always be carried out prior to the state emission inspection even though the SRT indicates “CMPLT”.

SRT Service Procedure

If a vehicle has failed the state emissions inspection due to one or more SRT items indicating “INCMP”, review the flowchart diagnostic sequence on the next page.

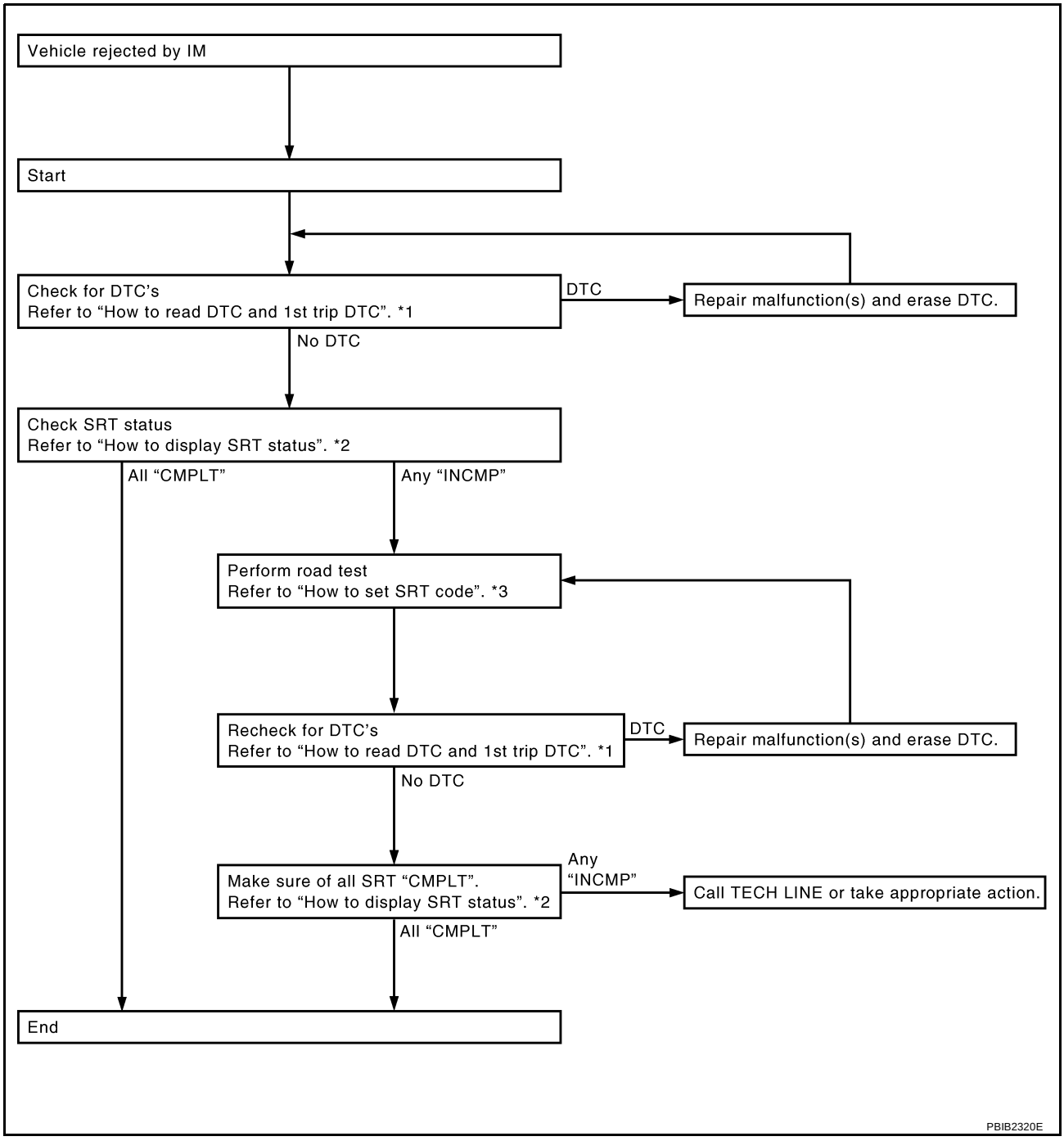

*1 EC-750 *2 EC-754 *3 EC-755

How to Display SRT Status

WITH CONSULT-II

Selecting "SRT STATUS" in "DTC CONFIRMATION" mode with CONSULT-II.

For items whose SRT codes are set, a "CMPLT" is displayed on the CONSULT-II screen; for items whose SRT codes are not set, "INCMP" is displayed.

A sample of CONSULT-II display for SRT code is shown in the figure.

"INCMP" means the self-diagnosis is incomplete and SRT is not set.

"CMPLT" means the self-diagnosis is complete and SRT is set.

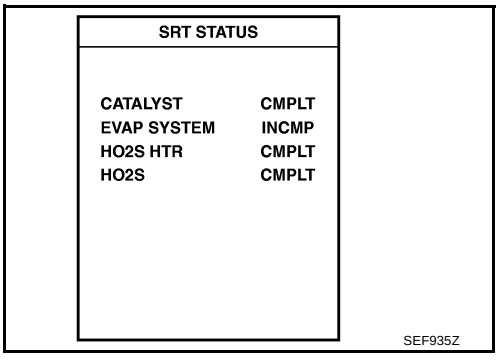

WITH GST

Selecting Service $01 with GST (Generic Scan Tool)

NO TOOLS

A SRT code itself can no be displayed while only SRT status can be.

1. Turn ignition switch ON and wait 20 seconds.
2. SRT status is indicated as shown below.
   - When all SRT codes are set, MIL lights up continuously.
   - When any SRT codes are not set, MIL will flash periodically for 10 seconds.

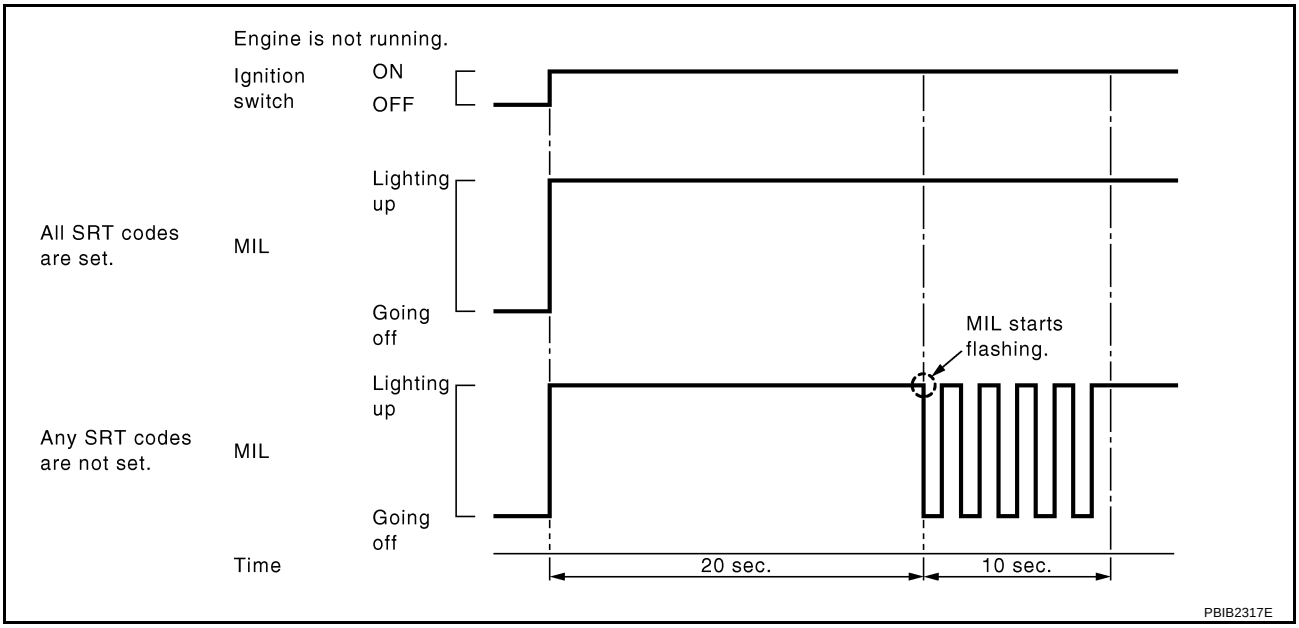

How to Set SRT Code

To set all SRT codes, self-diagnosis for the items indicated above must be performed one or more times. Each diagnosis may require a long period of actual driving under various conditions.

WITH CONSULT-II

Perform corresponding DTC Confirmation Procedure one by one based on Performance Priority in the table on EC-751, "SRT Item" .

WITHOUT CONSULT-II

The most efficient driving pattern in which SRT codes can be properly set is explained on the next page. The driving pattern should be performed one or more times to set all SRT codes.

Driving Pattern

Driving pattern

Note: Always drive vehicle in safe manner according to traffic conditions and obey all traffic laws.
Refer to next page for more information and explanation of chart.

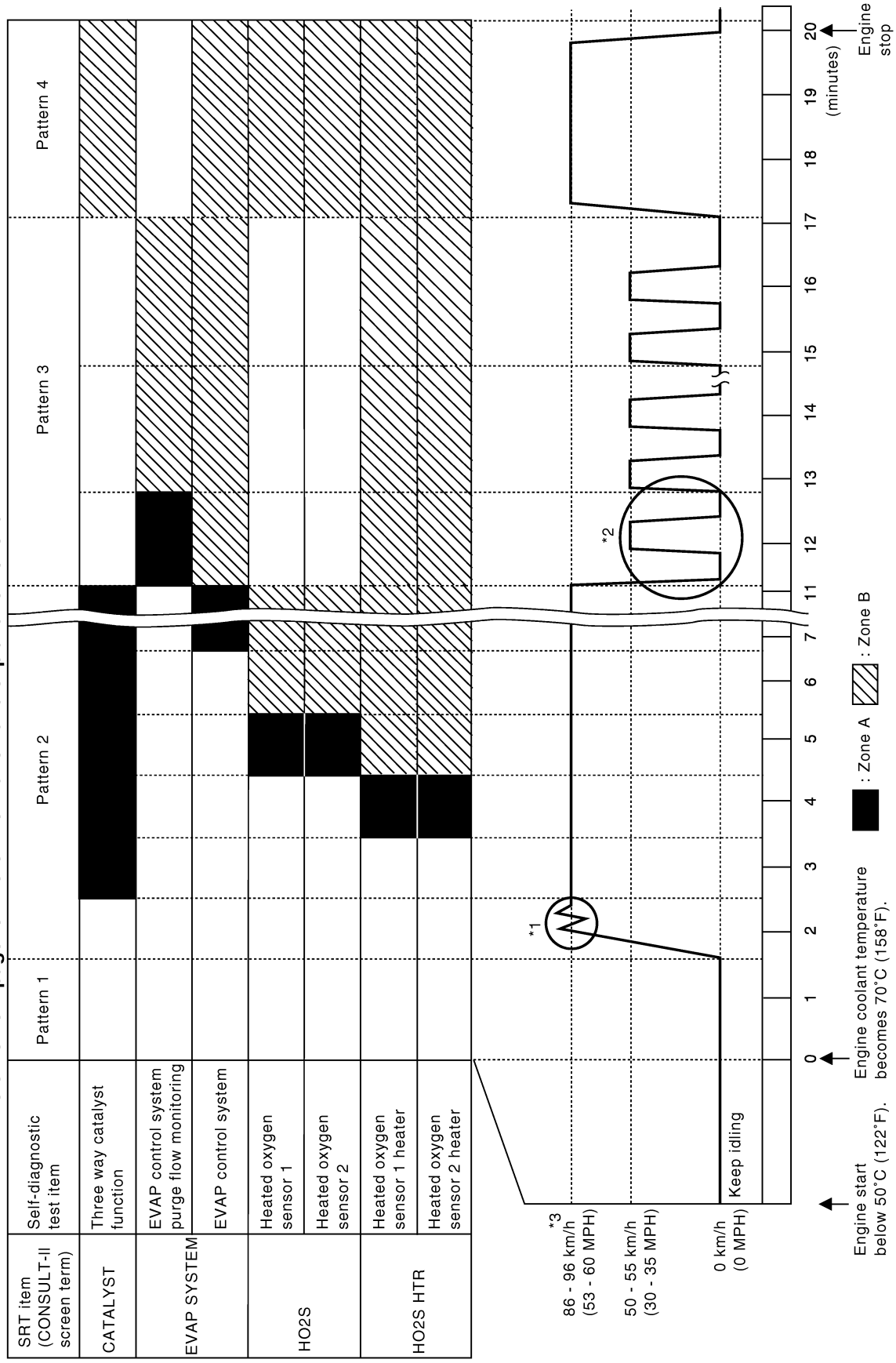

- The time required for each diagnosis varies with road surface conditions, weather, altitude, individual driving habits, etc.
  Zone A refers to the range where the time, required for the diagnosis under normal conditions*, is the shortest.
  Zone B refers to the range where the diagnosis can still be performed if the diagnosis is not completed within zone A.

*: Normal conditions refer to the following:

- Sea level
- Flat road
- Ambient air temperature: 20 - 30°C (68 - 86°F)
- Diagnosis is performed as quickly as possible under normal conditions.
  Under different conditions [For example: ambient air temperature other than 20 - 30°C (68 - 86°F)], diagnosis may also be performed.

Pattern 1:

- **The engine is started at the engine coolant temperature of –10 to 35°C (14 to 95°F) (where the voltage between the ECM terminal 73 and ground is 3.0 - 4.3V).**
- **The engine must be operated at idle speed until the engine coolant temperature is greater than 70°C (158°F) (where the voltage between the ECM terminal 73 and ground is lower than 1.4V).**
- **The engine is started at the fuel tank temperature of warmer than 0°C (32°F) (where the voltage between the ECM terminal 107 and ground is less than 4.1V).**

Pattern 2:

- When steady-state driving is performed again even after it is interrupted, each diagnosis can be conducted. In this case, the time required for diagnosis may be extended.

Pattern 3:

- The driving pattern outlined in *2 must be repeated at least 3 times.

Pattern 4:

- Tests are performed after the engine has been operated for at least 17 minutes.
- The accelerator pedal must be held very steady during steady-state driving.
- If the accelerator pedal is moved, the test must be conducted all over again.

*1: Depress the accelerator pedal until vehicle speed is 90 km/h (56 MPH), then release the accelerator pedal and keep it released for more than 10 seconds. Depress the accelerator pedal until vehicle speed is 90 km/h (56 MPH) again.

*2: Operate the vehicle in the following driving pattern.

1. Decelerate vehicle to 0 km/h (0 MPH) and let engine idle.
2. Repeat driving pattern shown at right at least 10 times.

– **During acceleration, hold the accelerator pedal as steady as possible.**

*3: Checking the vehicle speed with GST is advised.

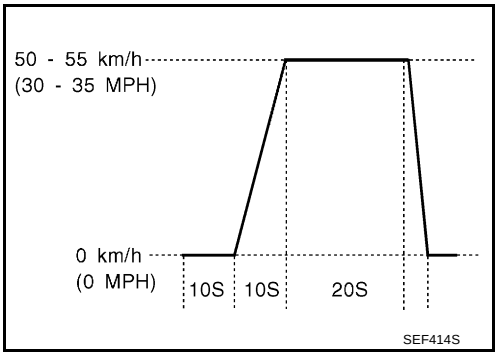

Suggested Transmission Gear Position

Set the selector lever in the D position.

TEST VALUE AND TEST LIMIT (GST ONLY — NOT APPLICABLE TO CONSULT-II)

The following is the information specified in Service $06 of SAE J1979.

The test value is a parameter used to determine whether a system/circuit diagnostic test is OK or NG while being monitored by the ECM during self-diagnosis. The test limit is a reference value which is specified as the maximum or minimum value and is compared with the test value being monitored.

These data (test value and test limit) are specified by Test ID (TID) and Component ID (CID) and can be displayed on the GST screen.

Item	Self-diagnostic test item	DTC	Test value (GST display)		Test limit	Conversion
			TID	CID		
CATALYST	Three way catalyst function (Bank 1)	P0420	01H	01H	Max.	1/128
		P0420	02H	81H	Min.	1
	Three way catalyst function (Bank 2)	P0430	03H	02H	Max.	1/128
		P0430	04H	82H	Min.	1
EVAP SYSTEM	EVAP control system (Small leak)	P0442	05H	03H	Max.	1/128mm^2
	EVAP control system purge flow monitoring	P0441	06H	83H	Min.	20mV
	EVAP control system (Very small leak)	P0456	07H	03H	Max.	1/128mm^2
HO2S	Heated oxygen sensor 1 (Bank 1)	P0133	09H	04H	Max.	16ms
		P1143	0AH	84H	Min.	10mV
		P1144	0BH	04H	Max.	10mV
		P0132	0CH	04H	Max.	10mV
		P0134	0DH	04H	Max.	1s
	Heated oxygen sensor 1 (Bank 2)	P0153	11H	05H	Max.	16ms
		P1163	12H	85H	Min.	10mV
		P1164	13H	05H	Max.	10mV
		P0152	14H	05H	Max.	10mV
		P0154	15H	05H	Max.	1s
	Heated oxygen sensor 2 (Bank 1)	P0139	19H	86H	Min.	10mV/500ms
		P1147	1AH	86H	Min.	10mV
		P1146	1BH	06H	Max.	10mV
		P0138	1CH	06H	Max.	10mV
	Heated oxygen sensor 2 (Bank 2)	P0159	21H	87H	Min.	10mV/500ms
		P1167	22H	87H	Min.	10mV
		P1166	23H	07H	Max.	10mV
		P0158	24H	07H	Max.	10mV
HO2S HEATER	Heated oxygen sensor 1 heater (Bank 1)	P0032	29H	08H	Max.	20mV
		P0031	2AH	88H	Min.	20mV
	Heated oxygen sensor 1 heater (Bank 2)	P0052	2BH	09H	Max.	20mV
		P0051	2CH	89H	Min.	20mV
	Heated oxygen sensor 2 heater (Bank 1)	P0038	2DH	0AH	Max.	20mV
		P0037	2EH	8AH	Min.	20mV
	Heated oxygen sensor 2 heater (Bank 2)	P0058	2FH	0BH	Max.	20mV
		P0057	30H	8BH	Min.	20mV

HOW TO ERASE EMISSION-RELATED DIAGNOSTIC INFORMATION

How to Erase DTC

With CONSULT-II

The emission related diagnostic information in the ECM can be erased by selecting “ERASE” in the “SELF-DIAG RESULTS” mode with CONSULT-II.
If DTCs are displayed for both ECM and TCM (Transmission control module), they need to be erased individually from the ECM and TCM (Transmission control module).

NOTE:
If the DTC is not for A/T related items (see EC-707), skip steps 2 through 4.

1. If the ignition switch stays ON after repair work, be sure to turn ignition switch OFF once. Wait at least 10 seconds and then turn it ON (engine stopped) again.
2. Turn CONSULT-II ON and touch “A/T”.

3. Touch “SELF-DIAG RESULTS”.
4. Touch “ERASE”. [The DTC in the TCM (Transmission control module) will be erased.] Then touch “BACK” twice.
5. Touch “ENGINE”.
6. Touch “SELF-DIAG RESULTS”.
7. Touch “ERASE”. (The DTC in the ECM will be erased.)

How to erase DTC (With CONSULT-II)

1. If the ignition switch stays “ON” after repair work, be sure to turn ignition switch “OFF” once. Wait at least 10 seconds and then turn it “ON” (engine stopped) again.

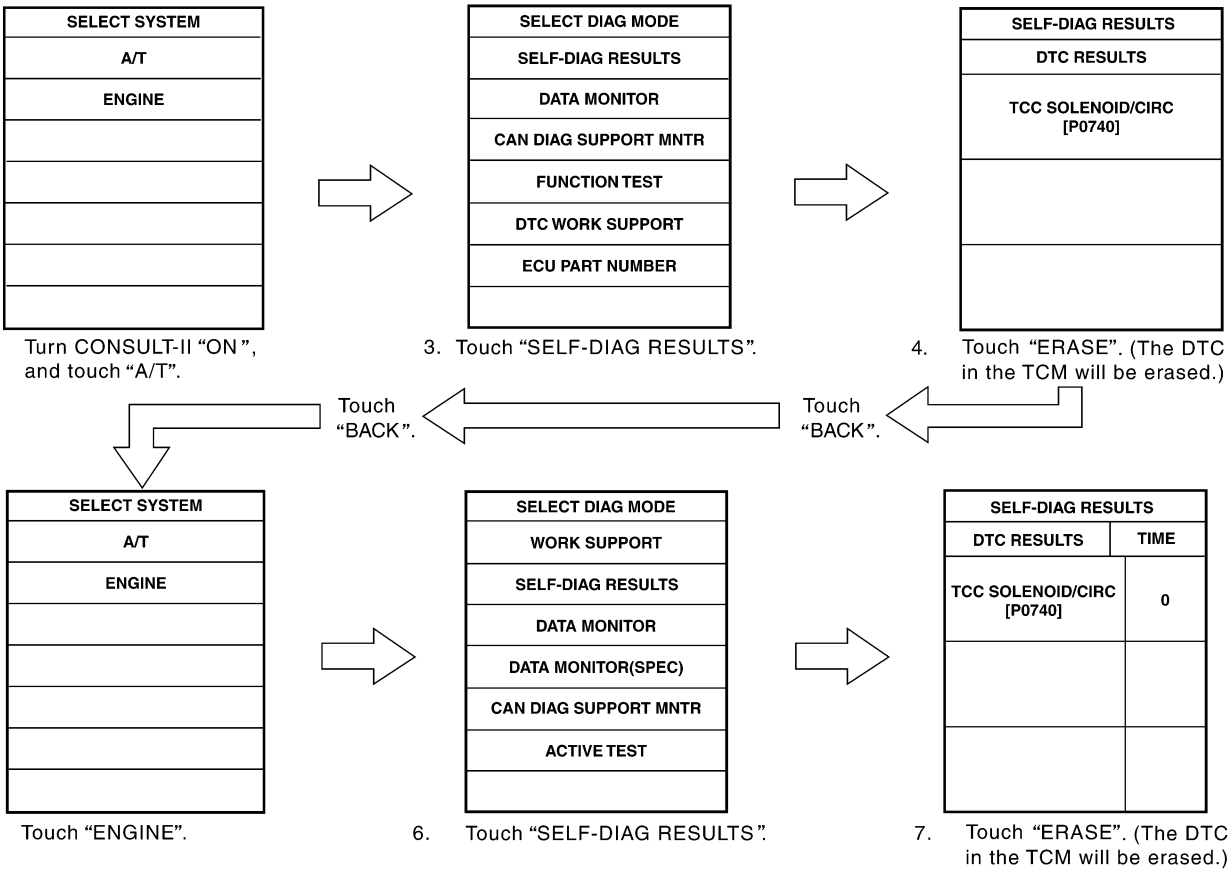

With GST

The emission related diagnostic information in the ECM can be erased by selecting Service $04 with GST.

NOTE:

If the DTC is not for A/T related items (see EC-707), skip step 2.

1. If the ignition switch stays ON after repair work, be sure to turn ignition switch OFF once. Wait at least 10 seconds and then turn it ON (engine stopped) again.
2. Perform AT-42, "HOW TO ERASE DTC (WITH GST)" . (The DTC in TCM will be erased.)
3. Select Service $04 with GST (Generic Scan Tool).

No Tools

NOTE:

If the DTC is not for A/T related items (see EC-707), skip step 2.

1. If the ignition switch stays ON after repair work, be sure to turn ignition switch OFF once. Wait at least 10 seconds and then turn it ON (engine stopped) again.
2. Perform AT-42, "HOW TO ERASE DTC (NO TOOLS)" . (The DTC in TCM will be erased.)
3. Change the diagnostic test mode from Mode II to Mode I by depressing the accelerator pedal. Refer to EC-762, "HOW TO SWITCH DIAGNOSTIC TEST MODE" .

- **If the battery is disconnected, the emission-related diagnostic information will be lost within 24 hours.**

- **The following data are cleared when the ECM memory is erased.**
  - Diagnostic trouble codes
  - 1st trip diagnostic trouble codes
  - Freeze frame data
  - 1st trip freeze frame data
  - System readiness test (SRT) codes
  - Test values

Actual work procedures are explained using a DTC as an example. Be careful so that not only the DTC, but all of the data listed above, are cleared from the ECM memory during work procedures.

Malfunction Indicator Lamp (MIL)

ABS00E4A

DESCRIPTION

The MIL is located on the instrument panel.

1. The MIL will light up when the ignition switch is turned ON without the engine running. This is a bulb check.
   If the MIL does not light up, refer to DI-42, "WARNING LAMPS" , or see EC-1393 .
2. When the engine is started, the MIL should go off.
   If the MIL remains on, the on board diagnostic system has detected an engine system malfunction.

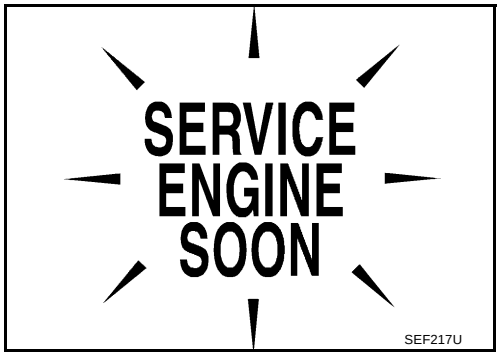

ON BOARD DIAGNOSTIC SYSTEM FUNCTION

The on board diagnostic system has the following four functions.

Diagnostic Test Mode	KEY and ENG. Status	Function	Explanation of Function
Mode I	Ignition switch in ON position  Engine stopped 	BULB CHECK	This function checks the MIL bulb for damage (blown, open circuit, etc.). If the MIL does not come on, check MIL circuit.
	Engine running 	MALFUNCTION WARNING	This is a usual driving condition. When a malfunction is detected twice in two consecutive driving cycles (two trip detection logic), the MIL will light up to inform the driver that a malfunction has been detected. The following malfunctions will light up or blink the MIL in the 1st trip. ● Misfire (Possible three way catalyst damage) ● One trip detection diagnoses
Mode II	Ignition switch in ON position  Engine stopped 	SELF-DIAGNOSTIC RESULTS	This function allows DTCs and 1st trip DTCs to be read.
	Engine running 	HEATED OXYGEN SENSOR 1 MONITOR	This function allows the fuel mixture condition (lean or rich), monitored by heated oxygen sensor 1, to be read.

When there is an open circuit on MIL circuit, the ECM cannot warn the driver by lighting up MIL when there is malfunction on engine control system.
Therefore, when electrical controlled throttle and part of ECM related diagnoses are continuously detected as NG for 5 trips, ECM warns the driver that engine control system malfunctions and MIL circuit is open by means of operating fail-safe function.
The fail-safe function also operates when above diagnoses except MIL circuit are detected and demands the driver to repair the malfunction.

Engine operating condition in fail-safe mode	Engine speed will not rise more than 2,500 rpm due to the fuel cut

MIL Flashing Without DTC

- When any SRT codes are not set, MIL may flash without DTC. For the details, refer to EC-754, "How to Display SRT Status" .
- If the ECM is in Diagnostic Test Mode II, MIL may flash when engine is running. In this case, check ECM diagnostic test mode. EC-762, "HOW TO SWITCH DIAGNOSTIC TEST MODE" .
  How to switch the diagnostic test (function) modes, and details of the above functions are described later. EC-762, "HOW TO SWITCH DIAGNOSTIC TEST MODE" .
  The following emission-related diagnostic information is cleared when the ECM memory is erased.

- Diagnostic trouble codes
- 1st trip diagnostic trouble codes
- Freeze frame data
- 1st trip freeze frame data
- System readiness test (SRT) codes

– Test values

HOW TO SWITCH DIAGNOSTIC TEST MODE

NOTE:

- **It is better to count the time accurately with a clock.**
- **It is impossible to switch the diagnostic mode when an accelerator pedal position sensor circuit has a malfunction.**
- **Always ECM returns to Diagnostic Test Mode I after ignition switch is turned OFF.**

How to Set Diagnostic Test Mode II (Self-diagnostic Results)

1. Confirm that accelerator pedal is fully released, turn ignition switch ON and wait 3 seconds.
2. Repeat the following procedure quickly five times within 5 seconds.

a. Fully depress the accelerator pedal.

b. Fully release the accelerator pedal.

3. Wait 7 seconds, fully depress the accelerator pedal and keep it for approx. 10 seconds until the MIL starts blinking.

   NOTE:
   Do not release the accelerator pedal for 10 seconds if MIL may start blinking on the halfway of this 10 seconds. This blinking is displaying SRT status and is continued for another 10 seconds. For the details, refer to EC-754, "How to Display SRT Status" .

4. Fully release the accelerator pedal.
   ECM has entered to Diagnostic Test Mode II (Self-diagnostic results).

   NOTE:
   Wait until the same DTC (or 1st trip DTC) appears to confirm all DTCs certainly.

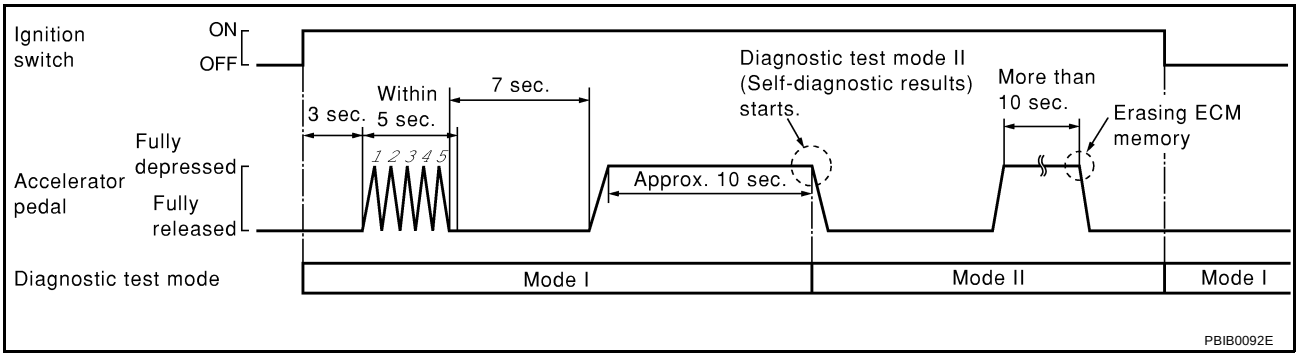

How to Set Diagnostic Test Mode II (Heated Oxygen Sensor 1 Monitor)

1. Set the ECM in Diagnostic Test Mode II (Self-diagnostic results). Refer to EC-762, "How to Set Diagnostic Test Mode II (Self-diagnostic Results)" .
2. Start Engine.
   ECM has entered to Diagnostic Test Mode II (Heated oxygen sensor 1 monitor).
   ECM will start heated oxygen sensor 1 monitoring from the bank 1 sensor.

How to Switch Monitored Sensor From Bank 1 to Bank 2 or Vice Versa

1. Fully depress the accelerator pedal quickly and then release it immediately.
2. Make sure that monitoring sensor has changed by MIL blinking as follows.

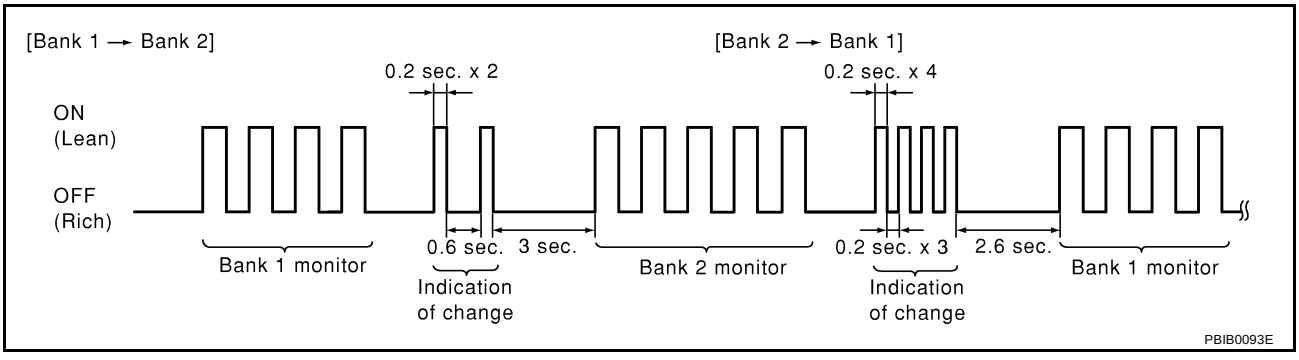

How to Erase Diagnostic Test Mode II (Self-diagnostic Results)

1. Set ECM in Diagnostic Test Mode II (Self-diagnostic results). Refer to EC-762, "How to Set Diagnostic Test Mode II (Self-diagnostic Results)" .
2. Fully depress the accelerator pedal and keep it for more than 10 seconds.
   The emission-related diagnostic information has been erased from the backup memory in the ECM.
3. Fully release the accelerator pedal, and confirm the DTC 0000 is displayed.

DIAGNOSTIC TEST MODE I — BULB CHECK

In this mode, the MIL on the instrument panel should stay ON. If it remains OFF, check the bulb. Refer to DI-42, "WARNING LAMPS" or see EC-1393 .

DIAGNOSTIC TEST MODE I — MALFUNCTION WARNING

MIL	Condition
ON	When the malfunction is detected.
OFF	No malfunction.

These DTC numbers are clarified in Diagnostic Test Mode II (SELF-DIAGNOSTIC RESULTS)

DIAGNOSTIC TEST MODE II — SELF-DIAGNOSTIC RESULTS

In this mode, the DTC and 1st trip DTC are indicated by the number of blinks of the MIL as shown below.
The DTC and 1st trip DTC are displayed at the same time. If the MIL does not illuminate in diagnostic test mode I (Malfunction warning), all displayed items are 1st trip DTCs. If only one code is displayed when the MIL illuminates in diagnostic test mode II (SELF-DIAGNOSTIC RESULTS), it is a DTC; if two or more codes are displayed, they may be either DTCs or 1st trip DTCs. DTC No. is same as that of 1st trip DTC. These unidentified codes can be identified by using the CONSULT-II or GST. A DTC will be used as an example for how to read a code.

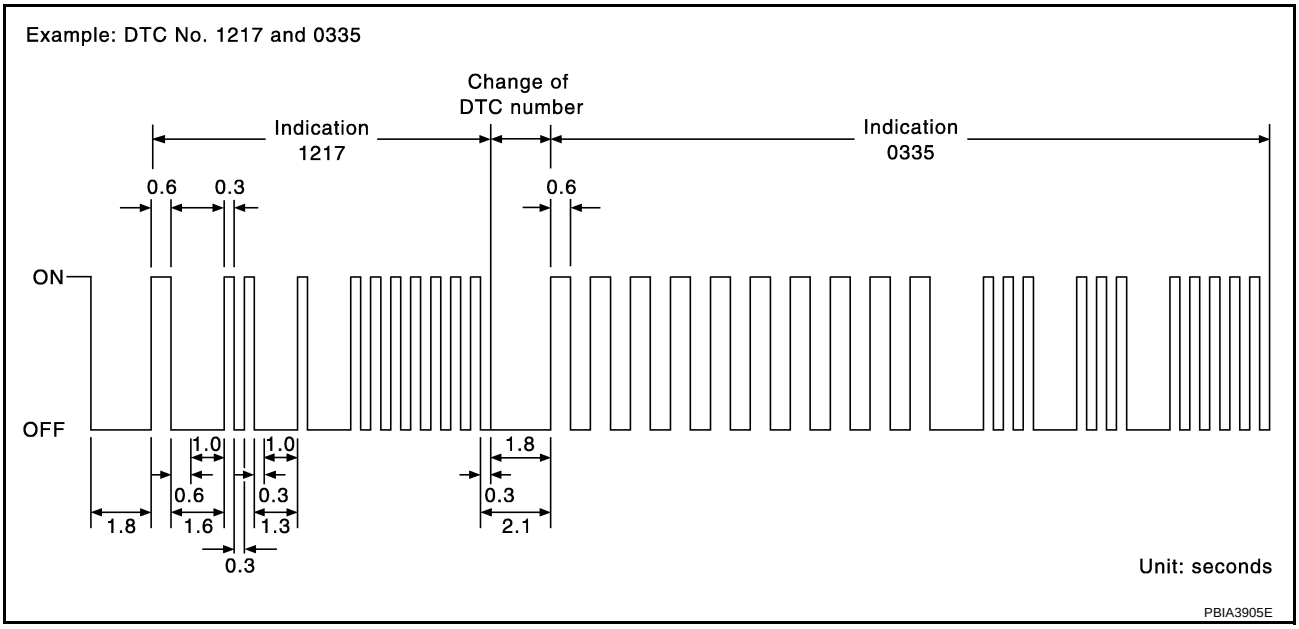

A particular trouble code can be identified by the number of four-digit numeral flashes. The “zero” is indicated by the number of ten flashes. The length of time the 1,000th-digit numeral flashes on and off is 1.2 seconds consisting of an ON (0.6-second) - OFF (0.6-second) cycle.
The 100th-digit numeral and lower digit numerals consist of a 0.3-second ON and 0.3-second OFF cycle.
A change from one digit numeral to another occurs at an interval of 1.0-second OFF. In other words, the later numeral appears on the display 1.3 seconds after the former numeral has disappeared.
A change from one trouble code to another occurs at an interval of 1.8-second OFF.
In this way, all the detected malfunctions are classified by their DTC numbers. The DTC 0000 refers to no malfunction. (See EC-707, "INDEX FOR DTC")

How to Erase Diagnostic Test Mode II (Self-Diagnostic Results)

The DTC can be erased from the back up memory in the ECM by depressing accelerator pedal. Refer to EC-763, "How to Erase Diagnostic Test Mode II (Self-diagnostic Results)" .

- **If the battery is disconnected, the DTC will be lost from the backup memory within 24 hours.**

- **Be careful not to erase the stored memory before starting trouble diagnoses.**

DIAGNOSTIC TEST MODE II — HEATED OXYGEN SENSOR 1 MONITOR

In this mode, the MIL displays the condition of the fuel mixture (lean or rich) which is monitored by the heated oxygen sensor 1.

MIL	Fuel mixture condition in the exhaust gas	Air fuel ratio feedback control condition
ON	Lean	Closed loop system
OFF	Rich	
*Remains ON or OFF	Any condition	Open loop system

*: Maintains conditions just before switching to open loop.

To check the heated oxygen sensor 1 function, start engine in the Diagnostic Test Mode II and warm it up until engine coolant temperature indicator points to the middle of the gauge.
Next run engine at about 2,000 rpm for about 2 minutes under no-load conditions. Then make sure that the MIL comes ON more than 5 times within 10 seconds with engine running at 2,000 rpm under no-load.

OBD System Operation Chart

ABS00E4B

RELATIONSHIP BETWEEN MIL, 1ST TRIP DTC, DTC, AND DETECTABLE ITEMS

- When a malfunction is detected for the first time, the 1st trip DTC and the 1st trip freeze frame data are stored in the ECM memory.
- When the same malfunction is detected in two consecutive trips, the DTC and the freeze frame data are stored in the ECM memory, and the MIL will come on. For details, refer to EC-745, "Two Trip Detection Logic" .
- The MIL will go off after the vehicle is driven 3 times with no malfunction. The drive is counted only when the recorded driving pattern is met (as stored in the ECM). If another malfunction occurs while counting, the counter will reset.
- The DTC and the freeze frame data will be stored until the vehicle is driven 40 times (driving pattern A) without the same malfunction recurring (except for Misfire and Fuel Injection System). For Misfire and Fuel Injection System, the DTC and freeze frame data will be stored until the vehicle is driven 80 times (driving pattern C) without the same malfunction recurring. The “TIME” in “SELF-DIAGNOSTIC RESULTS” mode of CONSULT-II will count the number of times the vehicle is driven.
- The 1st trip DTC is not displayed when the self-diagnosis results in OK for the 2nd trip.

SUMMARY CHART

Items	Fuel Injection System	Misfire	Other
MIL (goes off)	3 (pattern B)	3 (pattern B)	3 (pattern B)
DTC, Freeze Frame Data (no display)	80 (pattern C)	80 (pattern C)	40 (pattern A)
1st Trip DTC (clear)	1 (pattern C), *1	1 (pattern C), *1	1 (pattern B)
1st Trip Freeze Frame Data (clear)	*1, *2	*1, *2	1 (pattern B)

For details about patterns B and C under “Fuel Injection System” and “Misfire”, see EC-766 .
For details about patterns A and B under “Other”, see EC-768 .
*1: Clear timing is at the moment OK is detected.
*2: Clear timing is when the same malfunction is detected in the 2nd trip.

RELATIONSHIP BETWEEN MIL, DTC, 1ST TRIP DTC AND DRIVING PATTERNS FOR “MISFIRE ” <EXHAUST QUALITY DETERIORATION>, “FUEL INJECTION SYSTEM”

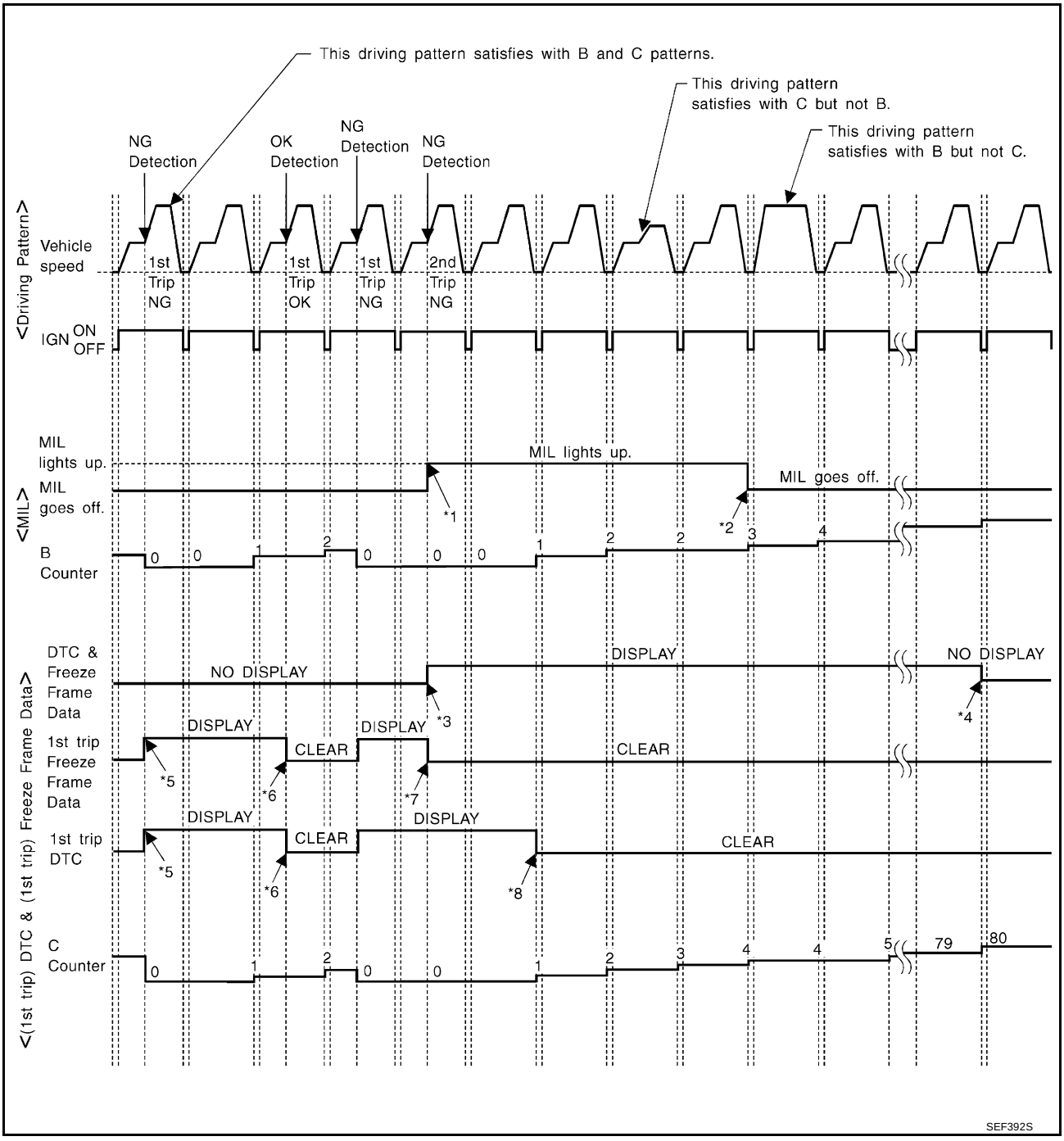

*1: When the same malfunction is detected in two consecutive trips, MIL will light up.

*2: MIL will go off after vehicle is driven 3 times (pattern B) without any malfunctions.

*3: When the same malfunction is detected in two consecutive trips, the DTC and the freeze frame data will be stored in ECM.

*4: The DTC and the freeze frame data will not be displayed any longer after vehicle is driven 80 times (pattern C) without the same malfunction. (The DTC and the freeze frame data still remain in ECM.)

*5: When a malfunction is detected for the first time, the 1st trip DTC and the 1st trip freeze frame data will be stored in ECM.

*6: The 1st trip DTC and the 1st trip freeze frame data will be cleared at the moment OK is detected.

*7: When the same malfunction is detected in the 2nd trip, the 1st trip freeze frame data will be cleared.

*8: 1st trip DTC will be cleared when vehicle is driven once (pattern C) without the same malfunction after DTC is stored in ECM.

EXPLANATION FOR DRIVING PATTERNS FOR “MISFIRE <EXHAUST QUALITY DETERIORATION>”, “FUEL INJECTION SYSTEM”

<Driving Pattern B>

Driving pattern B means the vehicle operation as follows:
All components and systems should be monitored at least once by the OBD system.

- The B counter will be cleared when the malfunction is detected once regardless of the driving pattern.
- The B counter will be counted up when driving pattern B is satisfied without any malfunction.
- The MIL will go off when the B counter reaches 3. (*2 in OBD SYSTEM OPERATION CHART)

<Driving Pattern C>

Driving pattern C means the vehicle operation as follows:
The following conditions should be satisfied at the same time:
Engine speed: (Engine speed in the freeze frame data) ±375 rpm
Calculated load value: (Calculated load value in the freeze frame data) x (1±0.1) [%]
Engine coolant temperature (T) condition:

- When the freeze frame data shows lower than 70°C (158°F), T should be lower than 70°C (158°F).
- When the freeze frame data shows higher than or equal to 70°C (158°F), T should be higher than or equal to 70°C (158°F).

Example:
If the stored freeze frame data is as follows:
Engine speed: 850 rpm, Calculated load value: 30%, Engine coolant temperature: 80°C (176°F)
To be satisfied with driving pattern C, the vehicle should run under the following conditions:
Engine speed: 475 - 1,225 rpm, Calculated load value: 27 - 33%, Engine coolant temperature: more than 70°C (158°F)

- The C counter will be cleared when the malfunction is detected regardless of vehicle conditions above.
- The C counter will be counted up when vehicle conditions above is satisfied without the same malfunction.
- The DTC will not be displayed after C counter reaches 80.
- The 1st trip DTC will be cleared when C counter is counted once without the same malfunction after DTC is stored in ECM.

RELATIONSHIP BETWEEN MIL, DTC, 1ST TRIP DTC AND DRIVING PATTERNS EXCEPT FOR "MISFIRE <EXHAUST QUALITY DETERIORATION>", "FUEL INJECTION SYSTEM"

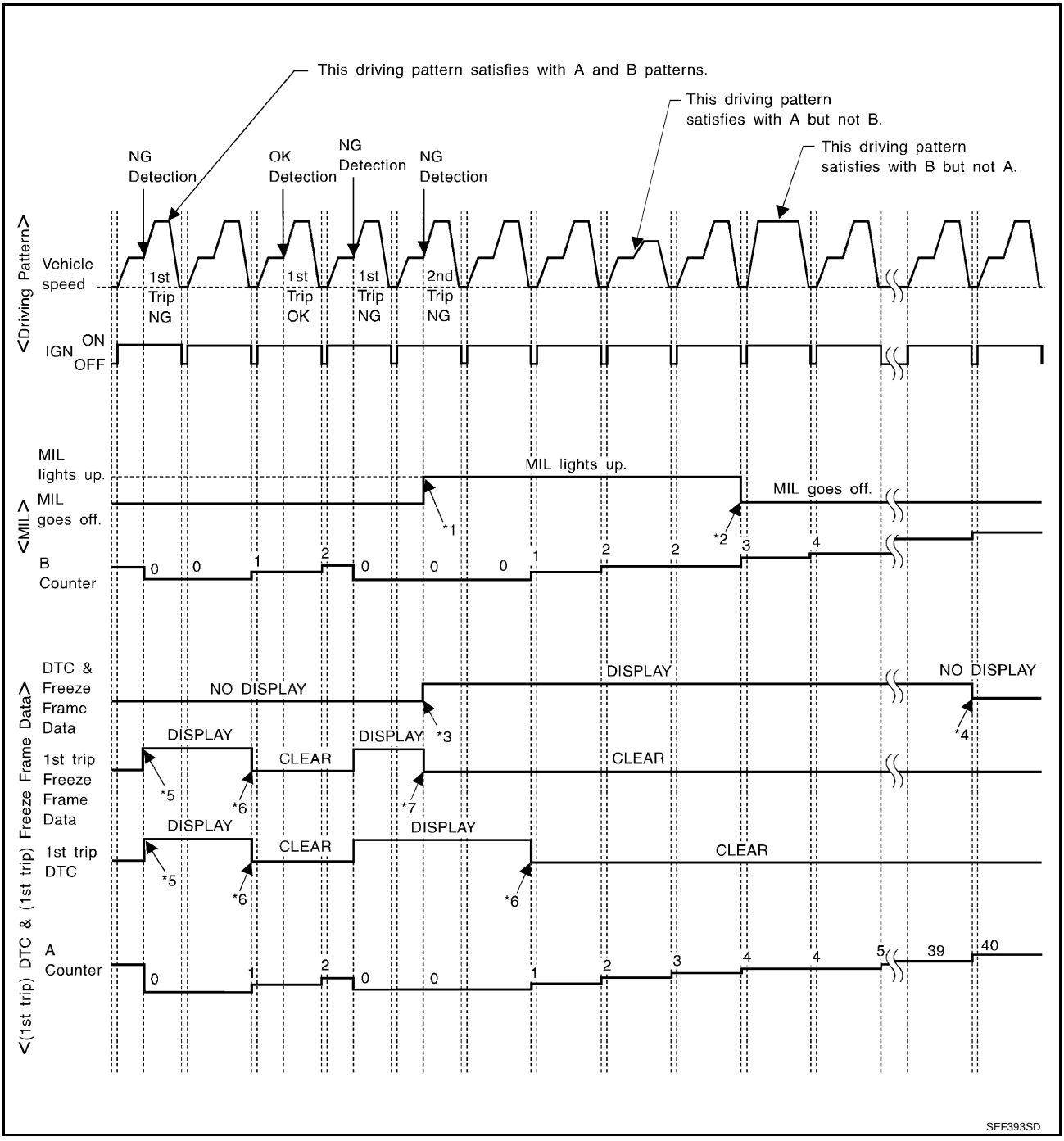

*1: When the same malfunction is detected in two consecutive trips, MIL will light up.

*2: MIL will go off after vehicle is driven 3 times (pattern B) without any malfunctions.

*3: When the same malfunction is detected in two consecutive trips, the DTC and the freeze frame data will be stored in ECM.

*4: The DTC and the freeze frame data will not be displayed any longer after vehicle is driven 40 times (pattern A) without the same malfunction. (The DTC and the freeze frame data still remain in ECM.)

*5: When a malfunction is detected for the first time, the 1st trip DTC and the 1st trip freeze frame data will be stored in ECM.

*6: 1st trip DTC will be cleared after vehicle is driven once (pattern B) without the same malfunction.

*7: When the same malfunction is detected in the 2nd trip, the 1st trip freeze frame data will be cleared.

EXPLANATION FOR DRIVING PATTERNS EXCEPT FOR "MISFIRE <EXHAUST QUALITY DETERIORATION>", "FUEL INJECTION SYSTEM"

<Driving Pattern A>

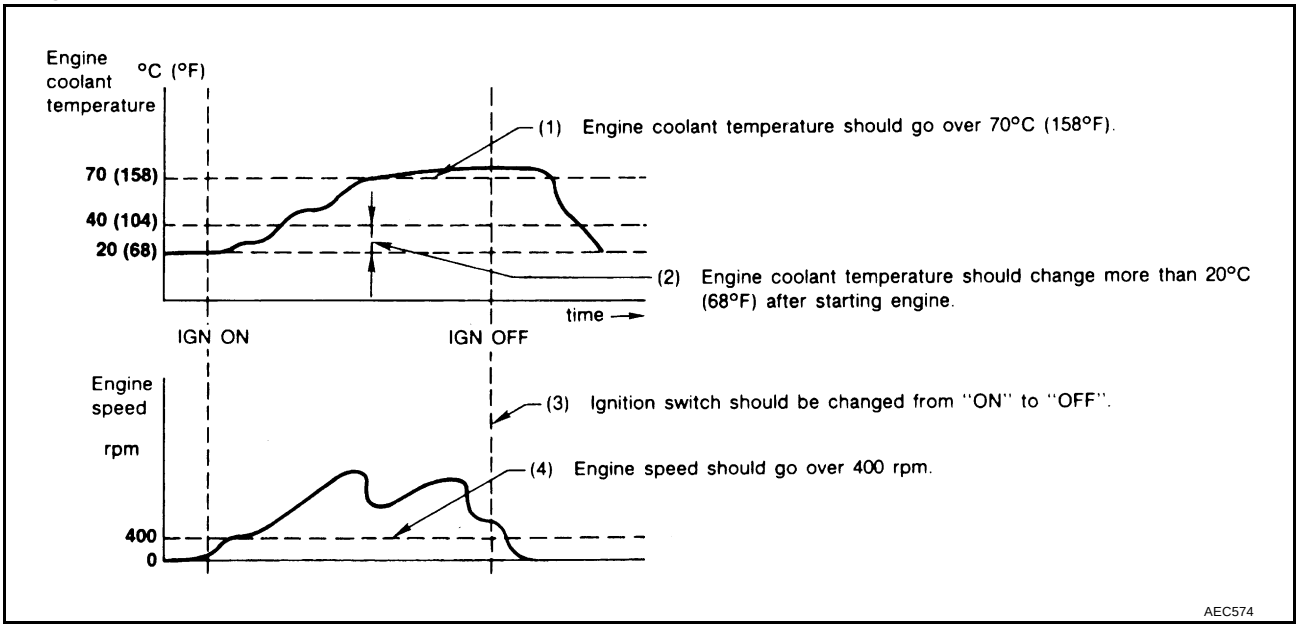

- The A counter will be cleared when the malfunction is detected regardless of (1) - (4).
- The A counter will be counted up when (1) - (4) are satisfied without the same malfunction.
- The DTC will not be displayed after the A counter reaches 40.

<Driving Pattern B>

Driving pattern B means the vehicle operation as follows:
All components and systems should be monitored at least once by the OBD system.

- The B counter will be cleared when the malfunction is detected once regardless of the driving pattern.
- The B counter will be counted up when driving pattern B is satisfied without any malfunctions.
- The MIL will go off when the B counter reaches 3 (*2 in OBD SYSTEM OPERATION CHART).

BASIC SERVICE PROCEDURE

PFP:00018

Basic Inspection

ABS00E4C

1. INSPECTION START

1. Check service records for any recent repairs that may indicate a related malfunction, or a current need for scheduled maintenance.
2. Open engine hood and check the following:
   - Harness connectors for improper connections
   - Wiring harness for improper connections, pinches and cut
   - Vacuum hoses for splits, kinks and improper connections
   - Hoses and ducts for leaks
   - Air cleaner clogging
   - Gasket
3. Confirm that electrical or mechanical loads are not applied.
   - Headlamp switch is OFF.
   - Air conditioner switch is OFF.
   - Rear window defogger switch is OFF.
   - Steering wheel is in the straight-ahead position, etc.
4. Start engine and warm it up until engine coolant temperature indicator points the middle of gauge.
   Ensure engine stays below 1,000 rpm.

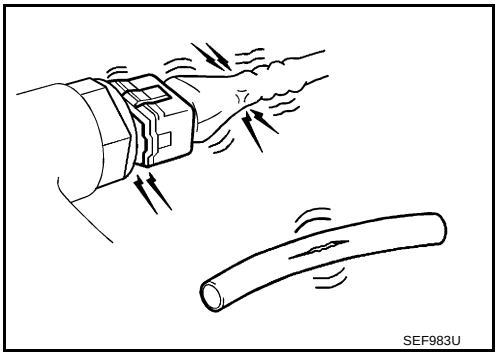

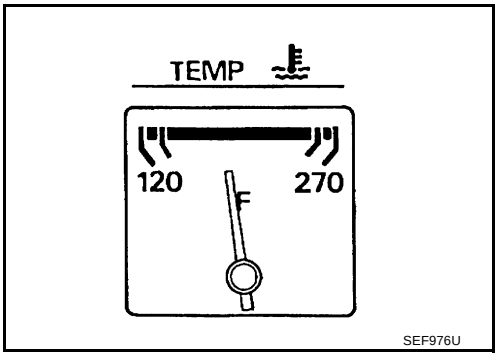

5. Run engine at about 2,000 rpm for about 2 minutes under no load.
6. Make sure that no DTC is displayed with CONSULT-II or GST.

OK or NG

OK >> GO TO 3.
NG >> GO TO 2.

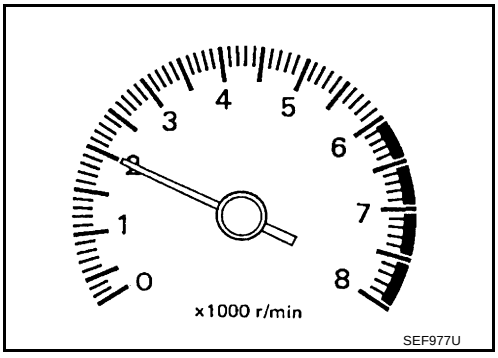

2. REPAIR OR REPLACE

Repair or replace components as necessary according to corresponding Diagnostic Procedure.

>> GO TO 3

3. CHECK TARGET IDLE SPEED

With CONSULT-II

1. Run engine at about 2,000 rpm for about 2 minutes under no load.
2. Rev engine (2,000 to 3,000 rpm) two or three times under no load, then run engine at idle speed for about 1 minute.

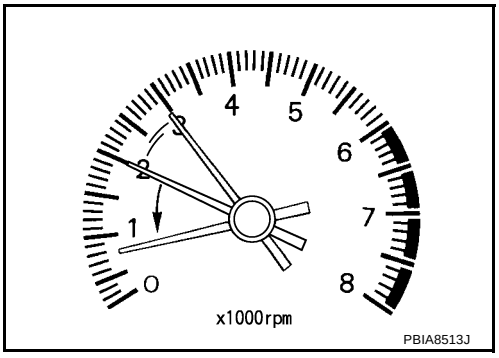

3. Read idle speed in “DATA MONITOR” mode with CONSULT-II. Refer to EC-774 .

   650 ± 50 rpm (in P or N position)

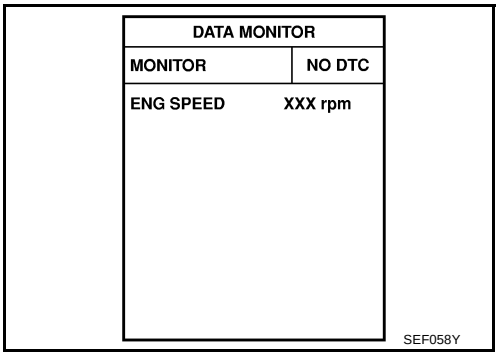

Without CONSULT-II

1. Run engine at about 2,000 rpm for about 2 minutes under no load.
2. Rev engine (2,000 to 3,000 rpm) two or three times under no load, then run engine at idle speed for about 1 minute.
3. Check idle speed. Refer to EC-774 .

   650 ± 50 rpm (in P or N position)

OK or NG

OK >> GO TO 10.
NG >> GO TO 4.

4. PERFORM ACCELERATOR PEDAL RELEASED POSITION LEARNING

1. Stop engine.
2. Perform EC-786, "Accelerator Pedal Released Position Learning" .

>> GO TO 5.

5. PERFORM THROTTLE VALVE CLOSED POSITION LEARNING

Perform EC-786, "Throttle Valve Closed Position Learning" .

>> GO TO 6.

6. PERFORM IDLE AIR VOLUME LEARNING

Refer to EC-787, "Idle Air Volume Learning" .

Is Idle Air Volume Learning carried out successfully?

Yes or No

Yes >> GO TO 7.

No >> 1. Follow the instruction of Idle Air Volume Learning.
2. GO TO 4.

7. CHECK TARGET IDLE SPEED AGAIN

With CONSULT-II

1. Start engine and warm it up to normal operating temperature.
2. Read idle speed in “DATA MONITOR” mode with CONSULT-II. Refer to EC-774 .

650 ± 50 rpm (in P or N position)

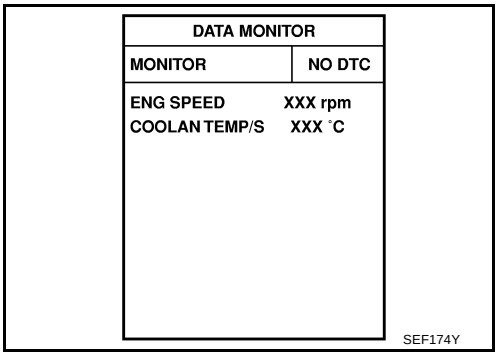

Without CONSULT-II

1. Start engine and warm it up to normal operating temperature.
2. Check idle speed. Refer to EC-774 .

650 ± 50 rpm (in P or N position)

OK or NG

OK >> GO TO 10.

NG >> GO TO 8.

8. DETECT MALFUNCTIONING PART

Check the Following.

- Check camshaft position sensor (PHASE) and circuit. Refer to EC-1043 .
- Check crankshaft position sensor (POS) and circuit. Refer to EC-1036 .

OK or NG

OK >> GO TO 9.

NG >> 1. Repair or replace.
2. GO TO 4.

9. CHECK ECM FUNCTION

1. Substitute another known-good ECM to check ECM function. (ECM may be the cause of an incident, but this is a rare case.)
2. Perform initialization of IVIS (NATS) system and registration of all IVIS (NATS) ignition key IDs. Refer to BL-215, "ECM Re-Communicating Function" .

>> GO TO 4.

10. CHECK IGNITION TIMING

1. Run engine at idle.
2. Check ignition timing with a timing light. Refer to EC-774 .

12 ± 5° BTDC (in P or N position)

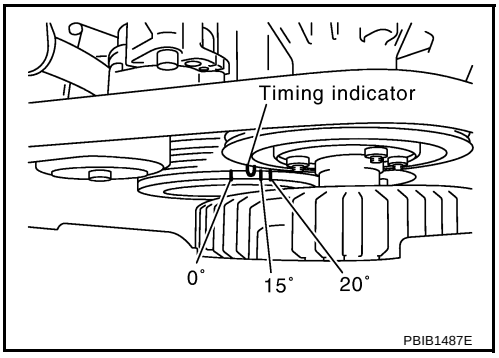

OK or NG

OK >> GO TO 19.
NG >> GO TO 11.

11. PERFORM ACCELERATOR PEDAL RELEASED POSITION LEARNING

1. Stop engine.
2. Perform EC-786, "Accelerator Pedal Released Position Learning" .

>> GO TO 12.

12. PERFORM THROTTLE VALVE CLOSED POSITION LEARNING

Perform EC-786, "Throttle Valve Closed Position Learning" .

>> GO TO 13.

13. PERFORM IDLE AIR VOLUME LEARNING

Refer to EC-787, "Idle Air Volume Learning" .
Is Idle Air Volume Learning carried out successfully?

Yes or No

Yes >> GO TO 14.
No >> 1. Follow the instruction of Idle Air Volume Learning.
2. GO TO 4.

14. CHECK TARGET IDLE SPEED AGAIN

With CONSULT-II

1. Start engine and warm it up to normal operating temperature.
2. Read idle speed in “DATA MONITOR” mode with CONSULT-II. Refer to EC-774 .

650 ± 50 rpm (in P or N position)

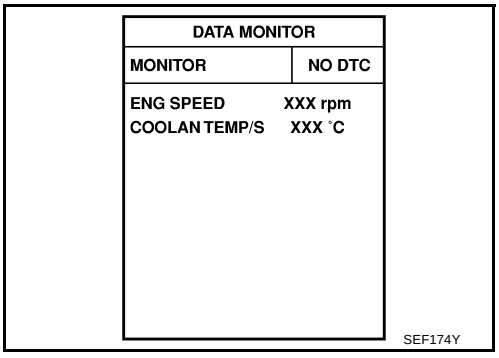

Without CONSULT-II

1. Start engine and warm it up to normal operating temperature.
2. Check idle speed. Refer to EC-774 .

650 ± 50 rpm (in P or N position)

OK or NG

OK >> GO TO 15.
NG >> GO TO 17.

15. CHECK IGNITION TIMING AGAIN

1. Run engine at idle.
2. Check ignition timing with a timing light. Refer to EC-774 .

12 ± 5° BTDC (in P or N position)

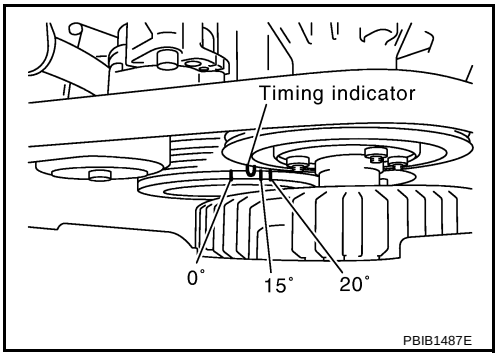

OK or NG

OK >> GO TO 19.
NG >> GO TO 16.

16. CHECK TIMING CHAIN INSTALLATION

Check timing chain installation. Refer to EM-200, "TIMING CHAIN" .

OK or NG

OK >> GO TO 17.
NG >> 1. Repair the timing chain installation.
2. GO TO 4.

17. DETECT MALFUNCTIONING PART

Check the following.

- Check camshaft position sensor (PHASE) and circuit. Refer to EC-1043 .
- Check crankshaft position sensor (POS) and circuit. Refer to EC-1036 .

OK or NG

OK >> GO TO 18.
NG >> 1. Repair or replace.
2. GO TO 4.

18. CHECK ECM FUNCTION

1. Substitute another known-good ECM to check ECM function. (ECM may be the cause of an incident, but this is a rare case.)
2. Perform initialization of IVIS (NATS) system and registration of all IVIS (NATS) ignition key IDs. Refer to BL-215, "ECM Re-Communicating Function" .

>> GO TO 4.

19. INSPECTION END

Did you replace ECM, referring this Basic Inspection procedure?

Yes or No

Yes >> 1. Perform EC-786, "VIN Registration" .
2. **INSPECTION END**
No >> **INSPECTION END**

Idle Speed and Ignition Timing Check

ABS00E4D

IDLE SPEED

With CONSULT-II

Check idle speed in “DATA MONITOR” mode with CONSULT-II.

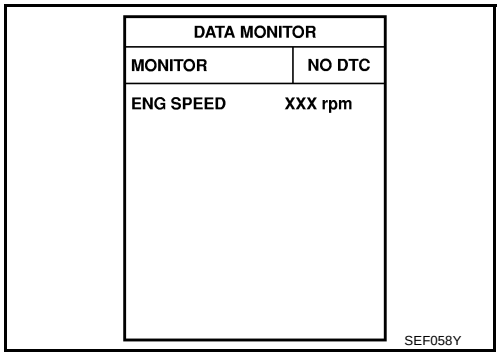

With GST

Check idle speed with GST.

IGNITION TIMING

Any of following two methods may be used.

Method A

1. Attach timing light to loop wire as shown.

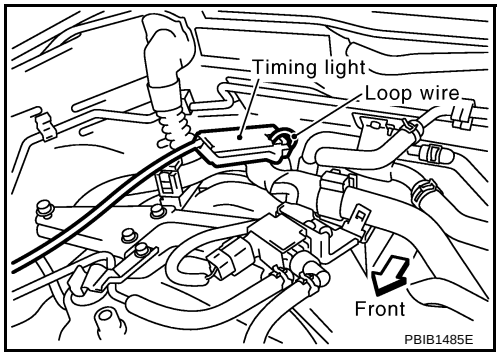

2. Check ignition timing.

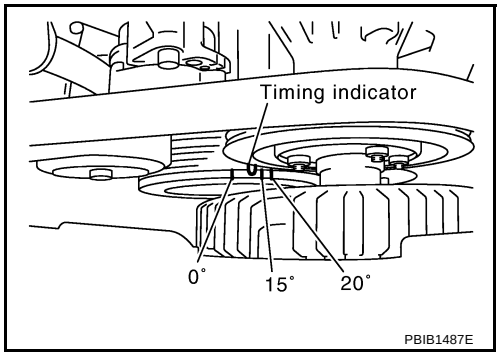

Method B

1. Remove ignition coil No. 1.

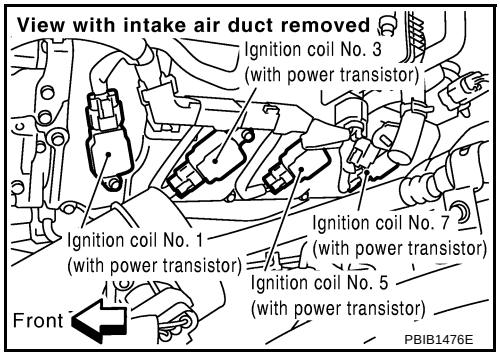

2. Connect ignition coil No. 1 and spark plug No. 1 with suitable high-tension wire as shown, and attach timing light clamp to this wire.

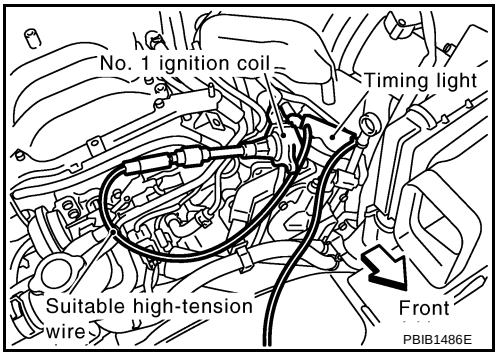

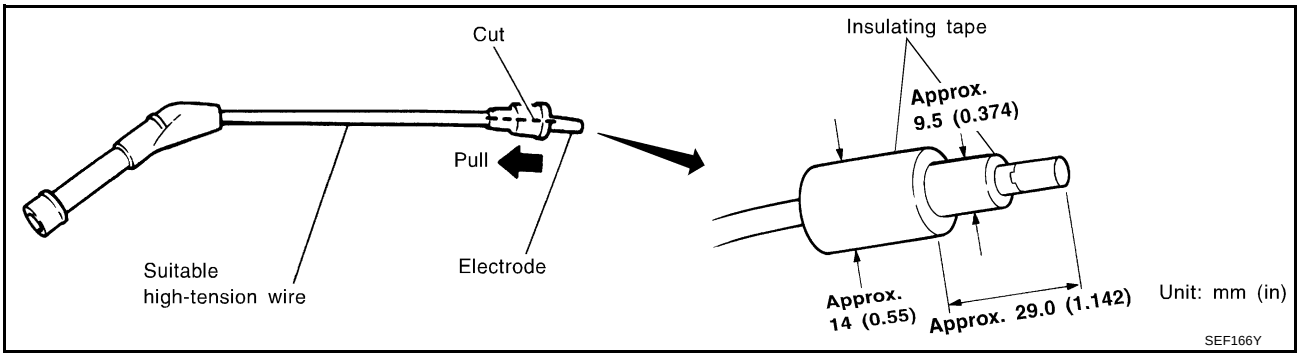

3. Check ignition timing.

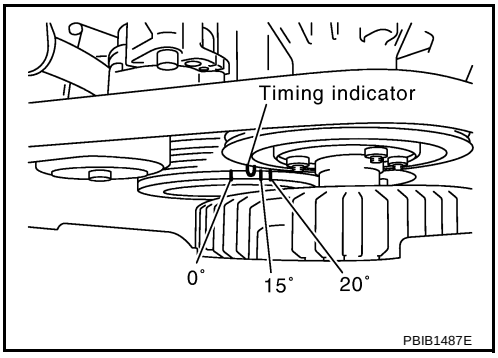

Idle Mixture Ratio Adjustment

ABS00E4E

PREPARATION

1. Make sure that the following parts are in good order.
- Battery
- Ignition system
- Engine oil and coolant levels
- Fuses
- ECM harness connector
- Vacuum hoses
- Air intake system
  (Oil filler cap, oil level gauge, etc.)
- Fuel pressure
- Engine compression
- Throttle valve
- Evaporative emission system
2. On air conditioner equipped models, checks should be carried out while the air conditioner is OFF.
3. On automatic transmission equipped models, when checking idle rpm, ignition timing and mixture ratio, checks should be carried out while selector lever is in N position.
4. When measuring CO percentage, insert probe more than 40 cm (15.7 in) into tail pipe.

5. Turn off headlamps heater blower, rear window defogger.
6. Keep front wheels pointed straight ahead.

OVERALL SEQUENCE

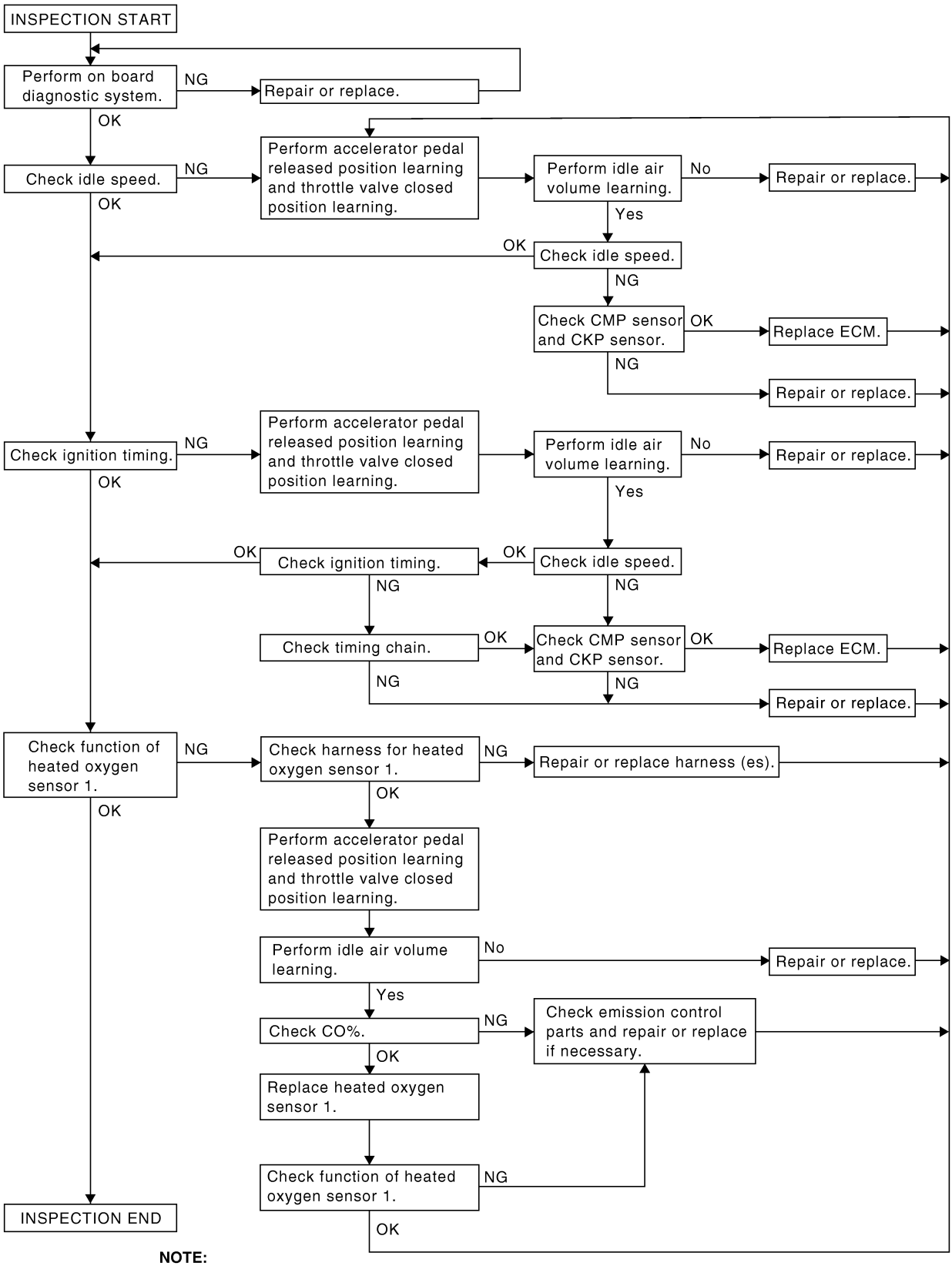

NOTE:
If a vehicle contains a part which is operating outside of design specifications with no MIL illumination, the part shall not be replaced prior to emission testing unless it is determined that the part has been tampered with or abused in such a way that the diagnostic system cannot reasonably be expected to detect the resulting malfunction.

PBIB2001E

DETAILED PROCEDURE

1. INSPECTION START

1. Check service records for any recent repairs that may indicate a related malfunction, or a current need for scheduled maintenance.
2. Open engine hood and check the following:
   - Harness connectors for improper connections
   - Wiring harness for improper connections, pinches and cut
   - Vacuum hoses for splits, kinks and improper connections
   - Hoses and ducts for leaks
   - Air cleaner clogging
   - Gasket
3. Confirm that electrical or mechanical loads are not applied.
   - Headlamp switch is OFF.
   - Air conditioner switch is OFF.
   - Rear window defogger switch is OFF.
   - Steering wheel is in the straight-ahead position, etc.

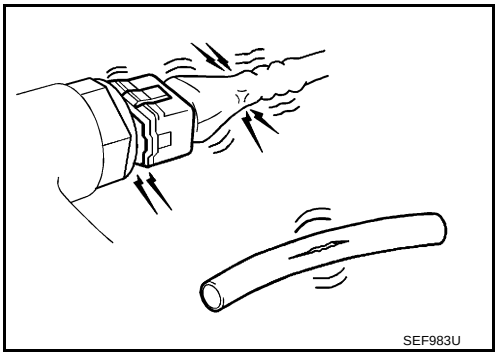

4. Start engine and warm it up until engine coolant temperature indicator points the middle of gauge.
   Ensure engine stays below 1,000 rpm.

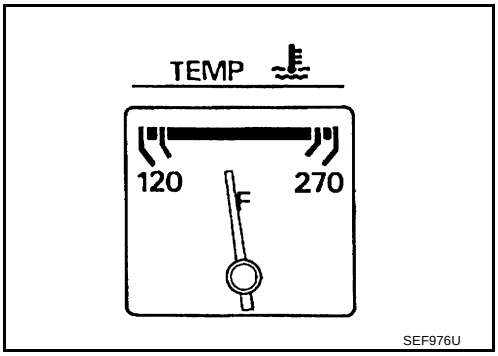

5. Run engine at about 2,000 rpm for about 2 minutes under no load.
6. Make sure that no DTC is displayed with CONSULT-II or GST.

OK or NG

OK >> GO TO 3.
NG >> GO TO 2.

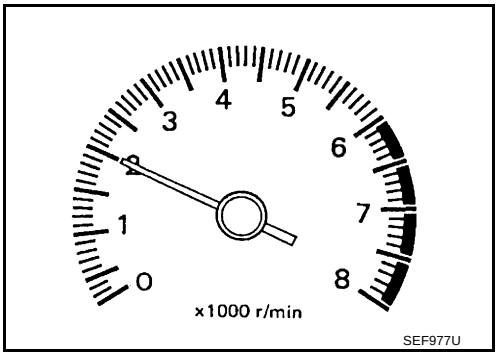

2. REPAIR OR REPLACE

Repair or replace components as necessary according to corresponding Diagnostic Procedure.

>> GO TO 3.

3. CHECK TARGET IDLE SPEED

With CONSULT-II

1. Run engine at about 2,000 rpm for about 2 minutes under no load.
2. Rev engine (2,000 to 3,000 rpm) two or three times under no load, then run engine at idle speed for about 1 minute.

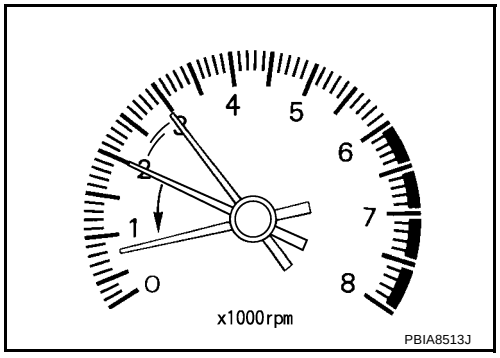

3. Read idle speed in “DATA MONITOR” mode with CONSULT-II. Refer to EC-774 .

   650 ± 50 rpm (in P or N position)

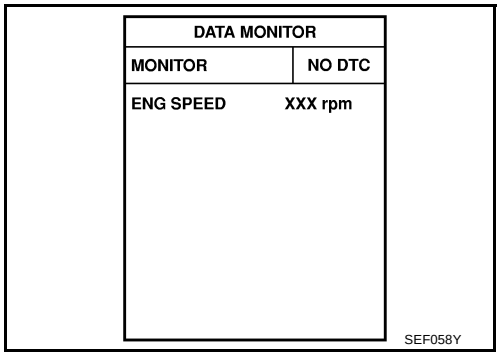

Without CONSULT-II

1. Run engine at about 2,000 rpm for about 2 minutes under no load.
2. Rev engine (2,000 to 3,000 rpm) two or three times under no load, then run engine at idle speed for about 1 minute.
3. Check idle speed. Refer to EC-774 .

   650 ± 50 rpm (in P or N position)

OK or NG

OK >> GO TO 10.
NG >> GO TO 4.

4. PERFORM ACCELERATOR PEDAL RELEASED POSITION LEARNING

1. Stop engine.
2. Perform EC-786, "Accelerator Pedal Released Position Learning" .

>> GO TO 5.

5. PERFORM THROTTLE VALVE CLOSED POSITION LEARNING

Perform EC-786, "Throttle Valve Closed Position Learning" .

>> GO TO 6.

6. PERFORM IDLE AIR VOLUME LEARNING

Perform EC-787, "Idle Air Volume Learning" .

Is Idle Air Volume Learning carried out successfully?

Yes or No

Yes >> GO TO 7.

No >> 1. Follow the instruction of Idle Air Volume Learning.
2. GO TO 4.

7. CHECK TARGET IDLE SPEED AGAIN

With CONSULT-II

1. Start engine and warm it up to normal operating temperature.
2. Read idle speed in “DATA MONITOR” mode with CONSULT-II. Refer to EC-774 .

650 ± 50 rpm (in P or N position)

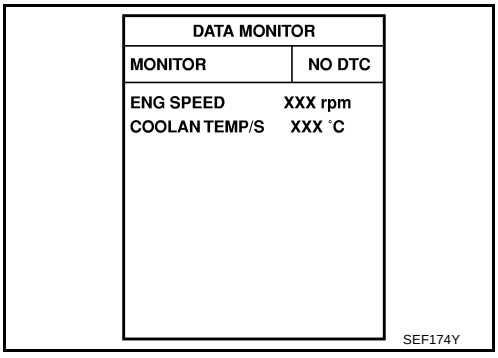

Without CONSULT-II

1. Start engine and warm it up to normal operating temperature.
2. Check idle speed. Refer to EC-774 .

650 ± 50 rpm (in P or N position)

OK or NG

OK >> GO TO 10.

NG >> GO TO 8.

8. DETECT MALFUNCTIONING PART

Check the Following.

- Check camshaft position sensor (PHASE) and circuit. refer to EC-1043 .
- Check crankshaft position sensor (POS) and circuit. refer to EC-1036 .

OK or NG

OK >> GO TO 9.

NG >> 1. Repair or replace.
2. GO TO 4.

9. CHECK ECM FUNCTION

1. Substitute another known-good ECM to check ECM function. (ECM may be the cause of an incident, but this is a rare case.)
2. Perform initialization of IVIS (NATS) system and registration of all IVIS (NATS) ignition key IDs. Refer to BL-215, "ECM Re-Communicating Function" .

>> GO TO 4.

10. CHECK IGNITION TIMING

1. Run engine at idle.
2. Check ignition timing with a timing light. Refer to EC-774 .

12 ± 5° BTDC (in P or N position)

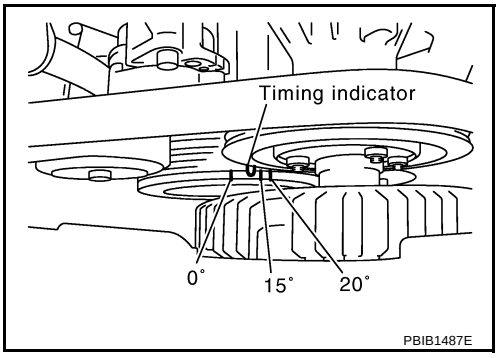

OK or NG

OK (With CONSULT-II)>>GO TO 19.
OK (Without CONSULT-II)>>GO TO 20.
NG >> GO TO 11.

11. PERFORM ACCELERATOR PEDAL RELEASED POSITION LEARNING

1. Stop engine.
2. Perform EC-786, "Accelerator Pedal Released Position Learning" .

>> GO TO 12.

12. PERFORM THROTTLE VALVE CLOSED POSITION LEARNING

Perform EC-786, "Throttle Valve Closed Position Learning" .

>> GO TO 13.

13. PERFORM IDLE AIR VOLUME LEARNING

Perform EC-787, "Idle Air Volume Learning" .
Is Idle Air Volume Learning carried out successfully?

Yes or No

Yes >> GO TO 14.
No >> 1. Follow the instruction of Idle Air Volume Learning.
2. GO TO 4.

14. CHECK TARGET IDLE SPEED AGAIN

With CONSULT-II

1. Start engine and warm it up to normal operating temperature.
2. Read idle speed in “DATA MONITOR” mode with CONSULT-II. Refer to EC-774 .

650 ± 50 rpm (in P or N position)

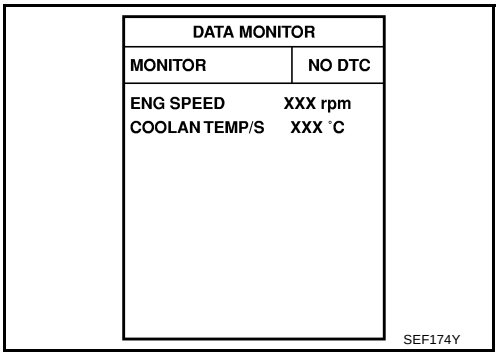

Without CONSULT-II

1. Start engine and warm it up to normal operating temperature.
2. Check idle speed. Refer to EC-774 .

650 ± 50 rpm (in P or N position)

OK or NG

OK >> GO TO 15.
NG >> GO TO 17.

15. CHECK IGNITION TIMING AGAIN

1. Run engine at idle.
2. Check ignition timing with a timing light. Refer to EC-774 .

12 ± 5° BTDC (in P or N position)

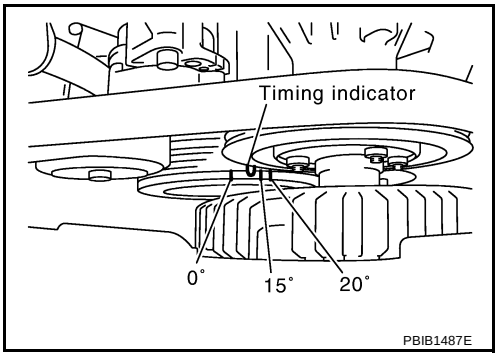

OK or NG

OK (With CONSULT-II)>>GO TO 19.
OK (Without CONSULT-II)>>GO TO 20.
NG >> GO TO 16.

16. CHECK TIMING CHAIN INSTALLATION

Check timing chain installation. Refer to EM-200, "TIMING CHAIN" .

OK or NG

OK >> GO TO 17.
NG >> 1. Repair the timing chain installation.
2. GO TO 4.

17. DETECT MALFUNCTIONING PART

Check the following.

- Check camshaft position sensor (PHASE) and circuit. refer to EC-1043 .
- Check crankshaft position sensor (POS) and circuit. refer to EC-1036 .

OK or NG

OK >> GO TO 18.
NG >> 1. Repair or replace.
2. GO TO 4.

18. CHECK ECM FUNCTION

1. Substitute another known-good ECM to check ECM function. (ECM may be the cause of an incident, but this is a rare case.)
2. Perform initialization of IVIS (NATS) system and registration of all IVIS (NATS) ignition key IDs. Refer to BL-215, "ECM Re-Communicating Function" .

>> GO TO 4.

19. CHECK HEATED OXYGEN SENSOR 1 (BANK 1) SIGNAL

With CONSULT-II

1. Run engine at about 2,000 rpm for about 2 minutes under no load.
2. See “HO2S1 MNTR (B1)” in “DATA MONITOR” mode.
3. Running engine at 2,000 rpm under no load (The engine is warmed up to normal operating temperature.), check that the monitor fluctuates between LEAN and RICH more than 5 times during 10 seconds.

   1 time: RICH → LEAN → RICH

   2 times: RICH → LEAN → RICH → LEAN → RICH

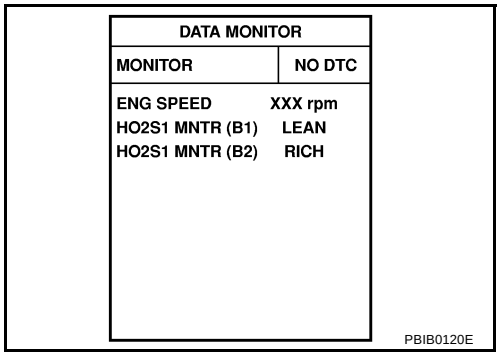

OK or NG

OK >> GO TO 21.
NG (Monitor does not fluctuate.)>>GO TO 23.
NG (Monitor fluctuates less than 5 times.)>>GO TO 31.

20. CHECK HEATED OXYGEN SENSOR 1 (BANK 1) SIGNAL

Without CONSULT-II

1. Stop engine and set ECM to Self Diagnostic Test Mode II (Heated oxygen sensor 1 monitor). Refer to EC-762, "HOW TO SWITCH DIAGNOSTIC TEST MODE" .
2. Start engine and run it at about 2,000 rpm for about 2 minutes under no load.
3. Running engine at 2,000 rpm under no load (The engine is warmed up to normal operating temperature.), check that the MIL comes on more than 5 times during 10 seconds.

OK or NG

OK >> GO TO 22.
NG (MIL does not come on)>>GO TO 23.
NG (MIL comes on less than 5 times)>>GO TO 31.

21. CHECK HEATED OXYGEN SENSOR 1 (BANK 2) SIGNAL

With CONSULT-II

1. See “HO2S1 MNTR (B2)” in “DATA MONITOR” mode.
2. Running engine at 2,000 rpm under no load (The engine is warmed up to normal operating temperature.), check that the monitor fluctuates between LEAN and RICH more than 5 times during 10 seconds.

   1 time: RICH → LEAN → RICH

   2 times: RICH → LEAN → RICH → LEAN → RICH

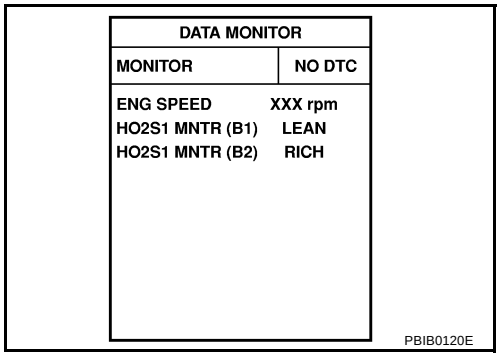

OK or NG

OK >> **INSPECTION END**
NG (Monitor does not fluctuate.)>>GO TO 24.
NG (Monitor fluctuates less than 5 times.)>>GO TO 31.

22. CHECK HEATED OXYGEN SENSOR 1 (BANK 2) SIGNAL

Without CONSULT-II

1. Switch the monitored sensor from bank 1 to bank 2. Refer to EC-762, "How to Switch Monitored Sensor From Bank 1 to Bank 2 or Vice Versa" .
2. Running engine at 2,000 rpm under no load (The engine is warmed up to normal operating temperature.), check that the MIL comes on more than 5 times during 10 seconds.

OK or NG

OK >> **INSPECTION END**
NG (MIL does not come on)>>GO TO 24.
NG (MIL comes on less than 5 times)>>GO TO 31.

23. CHECK HEATED OXYGEN SENSOR 1 (BANK 1) HARNESS

1. Turn ignition switch OFF and disconnect battery ground cable.
2. Disconnect ECM harness connector.
3. Disconnect heated oxygen sensor 1 (bank 1) harness connector.
4. Check harness continuity between ECM terminal 16 and heated oxygen sensor 1 (bank 1) terminal 1. Refer to Wiring Diagram, EC-937, "BANK 1" .

Continuity should exist.

5. Also check harness for short to ground and short to power.

OK or NG

OK >> GO TO 25.
NG >> 1. Repair or replace harness between ECM and heated oxygen sensor 1 (bank 1).
2. GO TO 4.

24. CHECK HEATED OXYGEN SENSOR 1 (BANK 2) HARNESS

1. Turn ignition switch OFF and disconnect battery ground cable.
2. Disconnect ECM harness connector.
3. Disconnect heated oxygen sensor 1 (bank 2) harness connector.
4. Check harness continuity between ECM terminal 35 and heated oxygen sensor 1 (bank 2) terminal 1. Refer to Wiring Diagram, EC-939, "BANK 2" .

Continuity should exist.

5. Also check harness for short to ground and short to power.

OK or NG

OK >> GO TO 25.
NG >> 1. Repair or replace harness between ECM and heated oxygen sensor 1 (bank 2).
2. GO TO 4.

25. PERFORM ACCELERATOR PEDAL RELEASED POSITION LEARNING

1. Reconnect ECM harness connector and heated oxygen sensor 1 harness connector.
2. Perform EC-786, "Accelerator Pedal Released Position Learning" .

>> GO TO 26.

26. PERFORM THROTTLE VALVE CLOSED POSITION LEARNING

Perform EC-786, "Throttle Valve Closed Position Learning" .

>> GO TO 27.

27. PERFORM IDLE AIR VOLUME LEARNING

Refer to EC-787, "Idle Air Volume Learning" .

Is Idle Air Volume Learning carried out successfully?

Yes or No

Yes (With CONSULT-II)>>GO TO 28.
Yes (Without CONSULT-II)>>GO TO 29.
No >> 1. Follow the instruction of Idle Air Volume Learning.
2. GO TO 4.

28. CHECK CO%

With CONSULT-II

1. Start engine and warm it up until engine coolant temperature indicator points the middle of gauge.
2. Turn ignition switch OFF, wait at least 10 seconds and then turn ON.
3. Select “ENG COOLANT TEMP” in “ACTIVE TEST” mode.
4. Set “ENG COOLANT TEMP” to 5°C (41°F) by touching “DOWN” and “Qd”.
5. Start engine and rev it (2,000 to 3,000 rpm) two or three times under no load, then run engine at idle speed.
6. Check CO%.

Idle CO: 0.7 – 9.9% and engine runs smoothly.

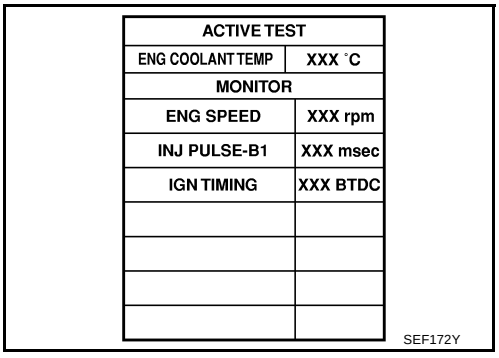

ACTIVE TEST	
ENG COOLANT TEMP	XXX °C
MONITOR	
ENG SPEED	XXX rpm
INJ PULSE-B1	XXX msec
IGN TIMING	XXX BTDC

SEF172Y

OK or NG

OK >> GO TO 31.
NG >> GO TO 30.

29. CHECK CO%

Without CONSULT-II

1. Start engine and warm it up until engine coolant temperature indicator points to the middle of gauge.
2. Turn ignition switch OFF.
3. Disconnect engine coolant temperature sensor harness connector.
4. Connect a resistor (4.4 kΩ) between terminals of engine coolant temperature sensor harness connector.
5. Start engine and rev it (2,000 to 3,000 rpm) two or three times under no load, then run engine at idle speed.
6. Check CO%.

Idle CO: 0.7 – 9.9% and engine runs smoothly.

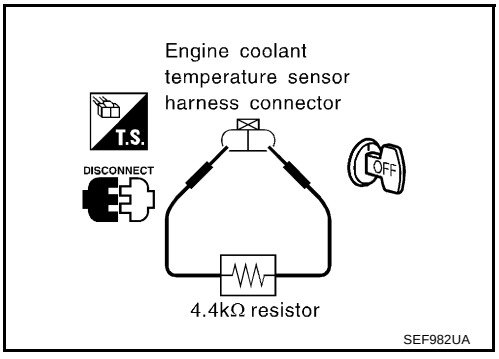

SEF982UA

7. After checking CO%, turn ignition switch OFF, disconnect the resistor from the terminals of engine coolant temperature sensor harness connector, and then connect engine coolant temperature sensor harness connector to engine coolant temperature sensor.

OK or NG

OK >> GO TO 31.
NG >> GO TO 30.

30. RECONNECT HEATED OXYGEN SENSOR 1 HARNESS CONNECTOR

1. Turn ignition switch OFF.
2. Reconnect heated oxygen sensor 1 harness connector.

>> GO TO 34.

31. REPLACE HEATED OXYGEN SENSOR 1

1. Stop engine.
2. Replace heated oxygen sensor 1 on the malfunctioning bank.

With CONSULT-II>>GO TO 32.
Without CONSULT-II>>GO TO 33.

32. CHECK HEATED OXYGEN SENSOR 1 (BANK 1) / (BANK 2) SIGNAL

With CONSULT-II

1. Start engine and warm it up until engine coolant temperature indicator points the middle of gauge.
2. See “HO2S1 MNTR (B1)/(B2)” in “DATA MONITOR” mode.
3. Running engine at 2,000 rpm under no load (The engine is warmed up to normal operating temperature.), check that the monitor fluctuates between LEAN and RICH more than 5 times during 10 seconds.

   1 time: RICH → LEAN → RICH

   2 times: RICH → LEAN → RICH → LEAN → RICH

DATA MONITOR	
MONITOR	NO DTC
ENG SPEED	XXX rpm
HO2S1 MNTR (B1)	LEAN
HO2S1 MNTR (B2)	RICH

SEF449Y

OK or NG

OK >> GO TO 4.
NG >> GO TO 34.

33. CHECK HEATED OXYGEN SENSOR 1 (BANK 1) / (BANK 2) SIGNAL

Without CONSULT-II

1. Set ECM to Self Diagnostic Test Mode II (Heated oxygen sensor 1 monitor). Refer to EC-762, "HOW TO SWITCH DIAGNOSTIC TEST MODE" .
2. Switch the monitored sensor to the malfunctioning bank. Refer to EC-762, "How to Switch Monitored Sensor From Bank 1 to Bank 2 or Vice Versa" .
3. Running engine at 2,000 rpm under no load (The engine is warmed up to normal operating temperature.), check that the MIL comes on more than 5 times during 10 seconds.

OK or NG

OK >> GO TO 4.
NG >> GO TO 34.

34. DETECT MALFUNCTIONING PART

Check the following.

- Check fuel pressure regulator and repair or replace if necessary. Refer to EC-789 .
- Check mass air flow sensor and its circuit, and repair or replace if necessary. Refer to EC-902 .
- Check injector and its circuit, and repair or replace if necessary. Refer to EC-1351 .
- Check engine coolant temperature sensor and its circuit, and repair or replace if necessary. Refer to EC-914 and EC-927 .

OK or NG

OK >> GO TO 36.
NG >> 1. Repair or replace.
2. GO TO 35.

35. ERASE UNNECESSARY DTC

After this inspection, unnecessary DTC might be displayed.
Erase the stored memory in ECM and TCM. Refer to EC-758, "HOW TO ERASE EMISSION-RELATED DIAGNOSTIC INFORMATION" and AT-40, "HOW TO ERASE DTC" .

>> GO TO 4.

36. CHECK ECM FUNCTION

1. Substitute another known-good ECM to check ECM function. (ECM may be the cause of an incident, but this is a rare case.)
2. Perform initialization of IVIS (NATS) system and registration of all IVIS (NATS) ignition key IDs. Refer to BL-215, "ECM Re-Communicating Function" .

>> GO TO 4.

VIN Registration

ABS00E4F

DESCRIPTION

VIN Registration is an operation to registering VIN in ECM. It must be performed each time ECM is replaced.

NOTE:
Accurate VIN which is registered in ECM may be required for Inspection & Maintenance (I/M).

OPERATION PROCEDURE

With CONSULT-II

1. Check the VIN of the vehicle and note it. Refer to GI-49, "IDENTIFICATION INFORMATION" .
2. Turn ignition switch ON and engine stopped.
3. Select “VIN REGISTRATION” in “WORK SUPPORT” mode.
4. Follow the instruction of CONSULT-II display.

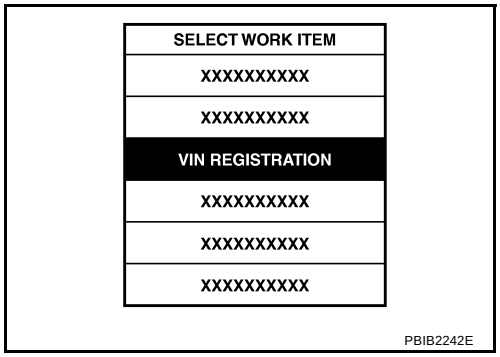

Accelerator Pedal Released Position Learning

ABS00E4G

DESCRIPTION

Accelerator Pedal Released Position Learning is an operation to learn the fully released position of the accelerator pedal by monitoring the accelerator pedal position sensor output signal. It must be performed each time harness connector of accelerator pedal position sensor or ECM is disconnected.

OPERATION PROCEDURE

1. Make sure that accelerator pedal is fully released.
2. Turn ignition switch ON and wait at least 2 seconds.
3. Turn ignition switch OFF and wait at least 10 seconds.
4. Turn ignition switch ON and wait at least 2 seconds.
5. Turn ignition switch OFF and wait at least 10 seconds.

Throttle Valve Closed Position Learning

ABS00E4H

DESCRIPTION

Throttle Valve Closed Position Learning is an operation to learn the fully closed position of the throttle valve by monitoring the throttle position sensor output signal. It must be performed each time harness connector of electric throttle control actuator or ECM is disconnected.

OPERATION PROCEDURE

1. Make sure that accelerator pedal is fully released.
2. Turn ignition switch ON.
3. Turn ignition switch OFF and wait at least 10 seconds.
   Make sure that throttle valve moves during above 10 seconds by confirming the operating sound.

Idle Air Volume Learning

ABS00E4I

DESCRIPTION

Idle Air Volume Learning is an operation to learn the idle air volume that keeps each engine within the specific range. It must be performed under any of the following conditions:

- Each time electric throttle control actuator or ECM is replaced.
- Idle speed or ignition timing is out of specification.

PREPARATION

Before performing Idle Air Volume Learning, make sure that all of the following conditions are satisfied. Learning will be cancelled if any of the following conditions are missed for even a moment.

- Battery voltage: More than 12.9V (At idle)
- Engine coolant temperature: 70 - 99°C (158 - 210°F)
- PNP switch: ON
- Electric load switch: OFF
  (Air conditioner, headlamp, rear window defogger)
  On vehicles equipped with daytime light systems, if the parking brake is applied before the engine is started the headlamp will not be illuminated.
- Steering wheel: Neutral (Straight-ahead position)
- Vehicle speed: Stopped
- Transmission: Warmed-up
  For models with CONSULT-II, drive vehicle until “ATF TEMP SE 1” in “DATA MONITOR” mode of “A/T” system indicates less than 0.9V.
  For models without CONSULT-II, drive vehicle for 10 minutes.

OPERATION PROCEDURE

With CONSULT-II

1. Perform EC-786, "Accelerator Pedal Released Position Learning" .
2. Perform EC-786, "Throttle Valve Closed Position Learning" .
3. Start engine and warm it up to normal operating temperature.
4. Check that all items listed under the topic PREPARATION (previously mentioned) are in good order.
5. Select “IDLE AIR VOL LEARN” in “WORK SUPPORT” mode.

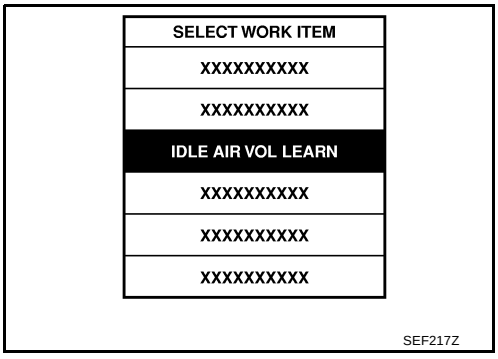

6. Touch “START” and wait 20 seconds.

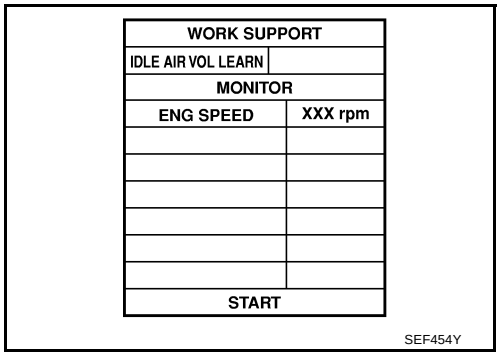

7. Make sure that “CMPLT” is displayed on CONSULT-II screen. If “CMPLT” is not displayed, Idle Air Volume Learning will not be carried out successfully. In this case, find the cause of the incident by referring to the DIAGNOSTIC PROCEDURE below.
8. Rev up the engine two or three times and make sure that idle speed and ignition timing are within the specifications.

ITEM	SPECIFICATION
Idle speed	650 ± 50 rpm (in P or N position)
Ignition timing	12 ± 5° BTDC (in P or N position)

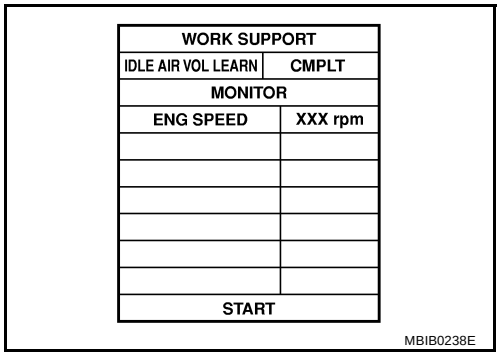

Without CONSULT-II

NOTE:

- **It is better to count the time accurately with a clock.**
- **It is impossible to switch the diagnostic mode when an accelerator pedal position sensor circuit has a malfunction.**

1. Perform EC-786, "Accelerator Pedal Released Position Learning" .
2. Perform EC-786, "Throttle Valve Closed Position Learning" .
3. Start engine and warm it up to normal operating temperature.
4. Check that all items listed under the topic PREPARATION (previously mentioned) are in good order.
5. Turn ignition switch OFF and wait at least 10 seconds.
6. Confirm that accelerator pedal is fully released, turn ignition switch ON and wait 3 seconds.
7. Repeat the following procedure quickly five times within 5 seconds.

a. Fully depress the accelerator pedal.
b. Fully release the accelerator pedal.

8. Wait 7 seconds, fully depress the accelerator pedal and keep it for approx. 20 seconds until the MIL stops blinking and turned ON.
9. Fully release the accelerator pedal within 3 seconds after the MIL turned ON.
10. Start engine and let it idle.
11. Wait 20 seconds.

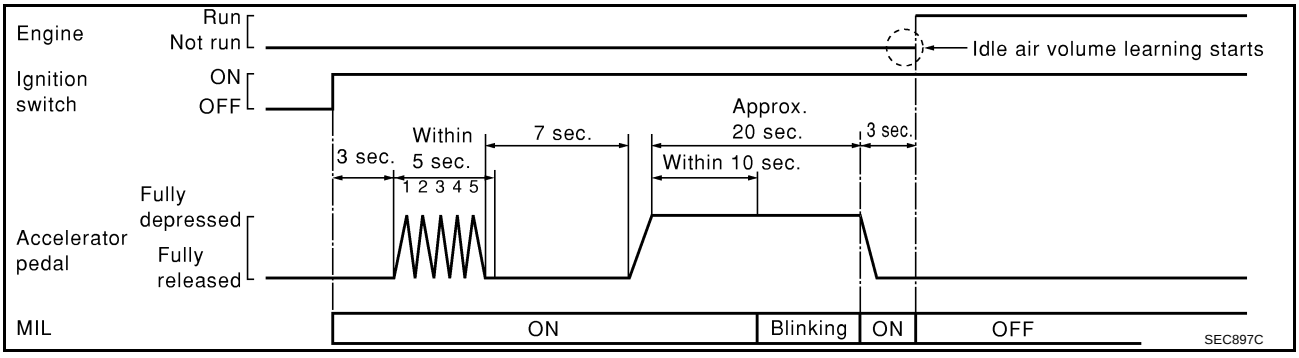

12. Rev up the engine two or three times and make sure that idle speed and ignition timing are within the specifications.

ITEM	SPECIFICATION
Idle speed	650 ± 50 rpm (in P or N position)
Ignition timing	12 ± 5° BTDC (in P or N position)

13. If idle speed and ignition timing are not within the specification, Idle Air Volume Learning will not be carried out successfully. In this case, find the cause of the incident by referring to the Diagnostic Procedure below.

DIAGNOSTIC PROCEDURE

If idle air volume learning cannot be performed successfully, proceed as follows:

1. **Check that throttle valve is fully closed.**
2. **Check PCV valve operation.**
3. **Check that downstream of throttle valve is free from air leakage.**
4. **When the above three items check out OK, engine component parts and their installation condition are questionable. Check and eliminate the cause of the incident.**
   It is useful to perform EC-844, "TROUBLE DIAGNOSIS - SPECIFICATION VALUE" **.**
5. **If any of the following conditions occur after the engine has started, eliminate the cause of the incident and perform Idle Air Volume Learning all over again:**

- **Engine stalls.**
- **Erroneous idle.**

Fuel Pressure Check

ABS007HR

FUEL PRESSURE RELEASE

With CONSULT-II

1. Turn ignition switch ON.
2. Perform “FUEL PRESSURE RELEASE” in “WORK SUPPORT” mode with CONSULT-II.
3. Start engine.
4. After engine stalls, crank it two or three times to release all fuel pressure.
5. Turn ignition switch OFF.

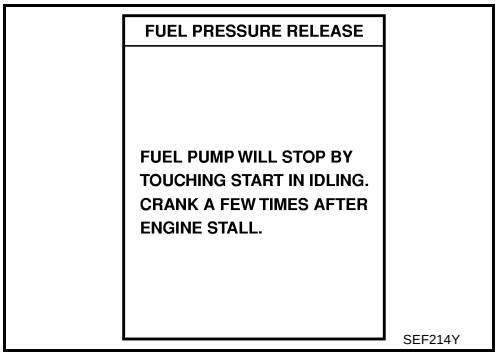

Without CONSULT-II

1. Remove fuel pump fuse located in IPDM E/R.
2. Start engine.
3. After engine stalls, crank it 2 or 3 times to release all fuel pressure.
4. Turn ignition switch OFF.
5. Reinstall fuel pump fuse after servicing fuel system.

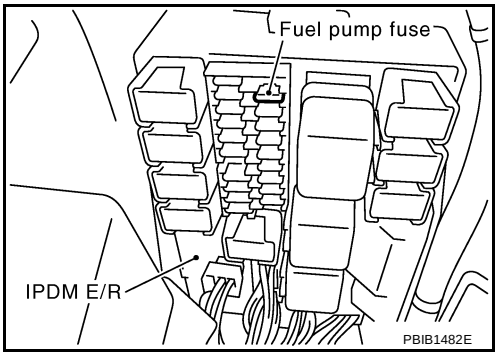

FUEL PRESSURE CHECK

Before disconnecting fuel line, release fuel pressure from fuel line to eliminate danger.

NOTE:

- **Prepare pans or saucers under the disconnected fuel line because the fuel may spill out. The fuel pressure cannot be completely released because S50 models do not have fuel return system.**
- **Use Fuel Pressure Gauge Kit (J-44321) to check fuel pressure.**

1. Release fuel pressure to zero. Refer to EC-789, "FUEL PRESSURE RELEASE" .

2. Install the inline fuel quick disconnected fitting between fuel damper and injector tube.

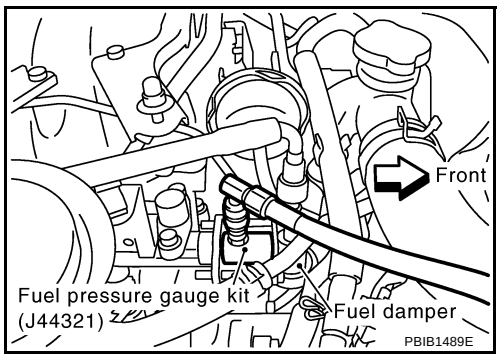

3. Connect the fuel pressure test gauge (quick connector adapter hose) to the inline fuel quick disconnected fitting.
4. Turn ignition switch ON and check for fuel leakage.
5. Start engine and check for fuel leakage.
6. Read the indication of fuel pressure gauge.

At idling: Approximately 350 kPa (3.57 kg/cm^2 , 51 psi)

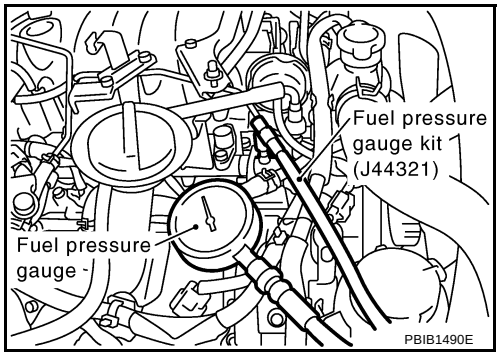

7. If result is unsatisfactory, go to next step.
8. Check the following.
   - Fuel hoses and fuel tubes for clogging
   - Fuel filter for clogging
   - Fuel pump
   - Fuel pressure regulator for clogging

   If OK, replace fuel level sensor unit, fuel filter and fuel pump assembly.
   If NG, repair or replace.

TROUBLE DIAGNOSIS

PFP:00004

Trouble Diagnosis Introduction

ABS00E4J

INTRODUCTION

The engine has an ECM to control major systems such as fuel control, ignition control, idle air control system, etc. The ECM accepts input signals from sensors and instantly drives actuators. It is essential that both input and output signals are proper and stable. At the same time, it is important that there are no malfunctions such as vacuum leaks, fouled spark plugs, or other malfunctions with the engine.

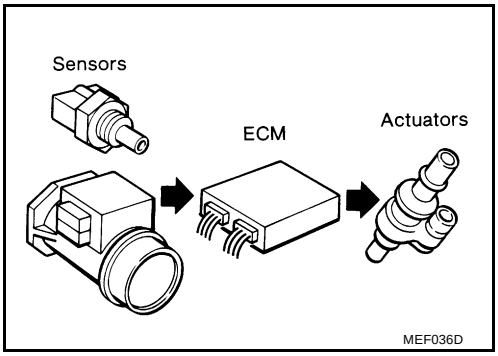

It is much more difficult to diagnose an incident that occurs intermittently rather than continuously. Most intermittent incidents are caused by poor electric connections or improper wiring. In this case, careful checking of suspected circuits may help prevent the replacement of good parts.

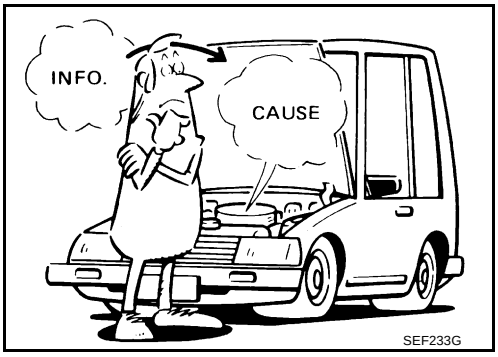

A visual check only may not find the cause of the incidents. A road test with CONSULT-II (or GST) or a circuit tester connected should be performed. Follow the Work Flow on EC-792 .
Before undertaking actual checks, take a few minutes to talk with a customer who approaches with a driveability complaint. The customer can supply good information about such incidents, especially intermittent ones. Find out what symptoms are present and under what conditions they occur. A Diagnostic Worksheet like the example on EC-796 should be used.
Start your diagnosis by looking for conventional malfunctions first. This will help troubleshoot driveability malfunctions on an electronically controlled engine vehicle.

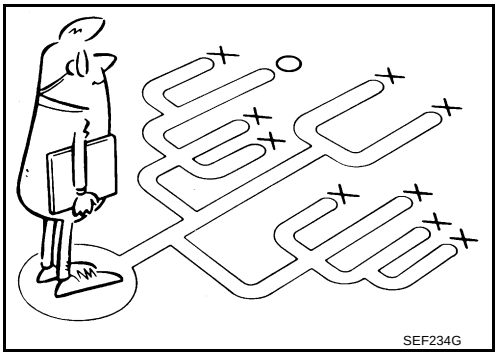

WORK FLOW
Overall Sequence

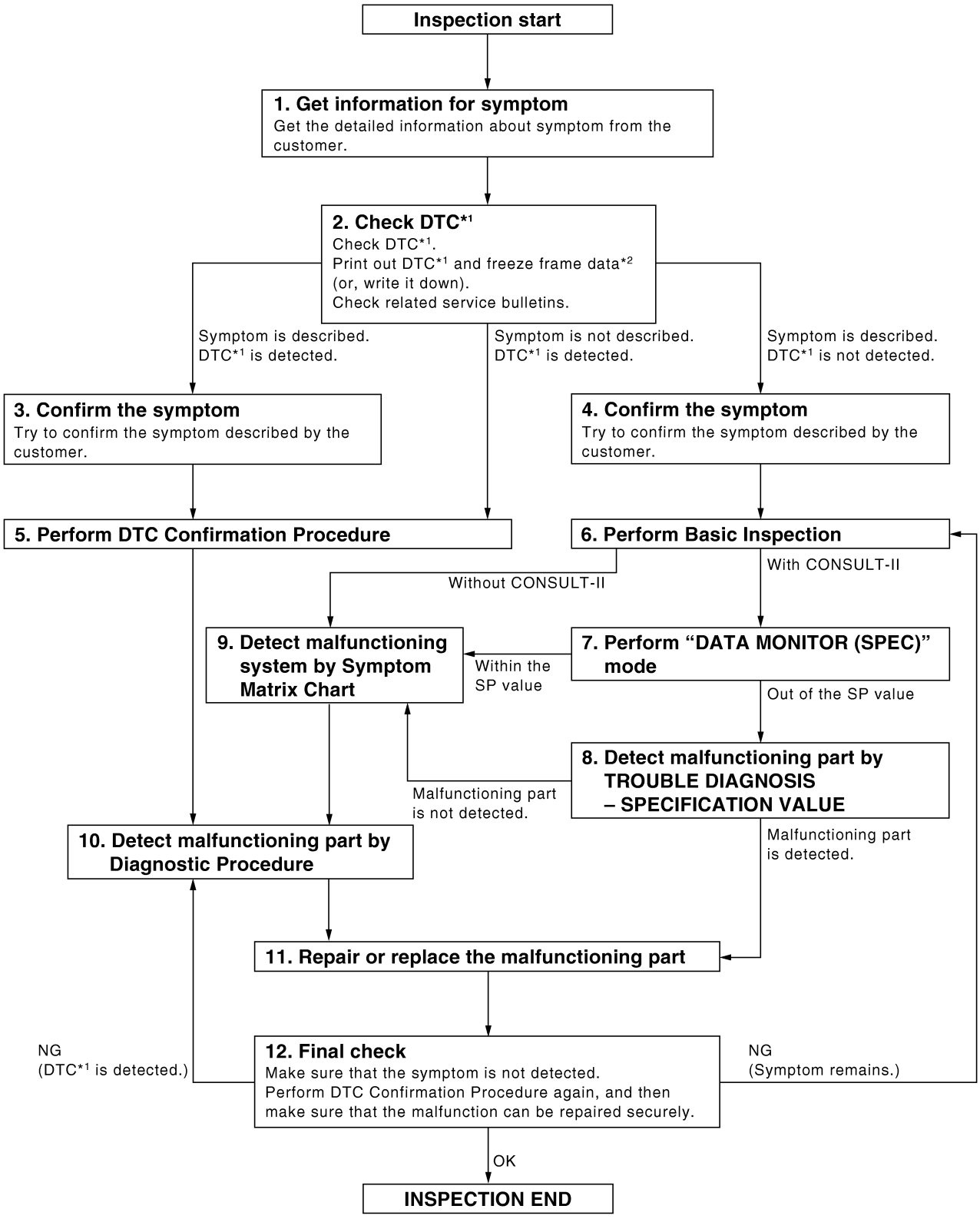

*1: Include 1st trip DTC.
*2: Include 1st trip freeze frame data.

PBIB2267E

Detailed Flow

1. GET INFORMATION FOR SYMPTOM

Get the detailed information from the customer about the symptom (the condition and the environment when the incident/malfunction occurred) using the EC-795, "DIAGNOSTIC WORKSHEET" .

>> GO TO 2.

2. CHECK DTC*1

1. Check DTC*1 .
2. Perform the following procedure if DTC*1 is displayed.
- Record DTC*1 and freeze frame data*2 . (Print them out with CONSULT-II or GST.)
- Erase DTC*1 . (Refer to EC-758, "HOW TO ERASE EMISSION-RELATED DIAGNOSTIC INFORMATION" .)
- Study the relationship between the cause detected by DTC*1 and the symptom described by the customer. (Symptom Matrix Chart is useful. Refer to EC-800 .)
3. Check related service bulletins for information.

Is any symptom described and any DTC detected?

Symptom is described, DTC*1 is displayed>>GO TO 3.
Symptom is described, DTC*1 is not displayed>>GO TO 4.
Symptom is not described, DTC*1 is displayed>>GO TO 5.

3. CONFIRM THE SYMPTOM

Try to confirm the symptom described by the customer (except MIL ON).
DIAGNOSIS WORK SHEET is useful to verify the incident.
Connect CONSULT-II to the vehicle in “DATA MONITOR (AUTO TRIG)” mode and check real time diagnosis results.
Verify relation between the symptom and the condition when the symptom is detected.

>> GO TO 5.

4. CONFIRM THE SYMPTOM

Try to confirm the symptom described by the customer.
DIAGNOSIS WORK SHEET is useful to verify the incident.
Connect CONSULT-II to the vehicle in “DATA MONITOR (AUTO TRIG)” mode and check real time diagnosis results.
Verify relation between the symptom and the condition when the symptom is detected.

>> GO TO 6.

5. PERFORM DTC CONFIRMATION PROCEDURE

Perform DTC Confirmation Procedure for the displayed DTC*1 , and then make sure that DTC*1 is detected again.
At this time, always connect CONSULT-II to the vehicle, and check diagnostic results in real time on “DATA MONITOR (AUTO TRIG)”.
If two or more DTCs*1 are detected, refer to EC-797, "DTC Inspection Priority Chart" and determine trouble diagnosis order.

NOTE:

- Freeze frame data*2 is useful if the DTC*1 is not detected.
- Perform Overall Function Check if DTC Confirmation Procedure is not included on Service Manual. This simplified check procedure is an effective alternative though DTC*1 cannot be detected during this check. If the result of Overall Function Check is NG, it is the same as the detection of DTC*1 by DTC Confirmation Procedure.

Is DTC*1 detected?

Yes >> GO TO 10.
No >> Check according to EC-854, "TROUBLE DIAGNOSIS FOR INTERMITTENT INCIDENT" .

6. PERFORM BASIC INSPECTION

Perform EC-769, "Basic Inspection" .

With CONSULT-II>>GO TO 7.
Without CONSULT-II>>GO TO 9.

7. PERFORM DATA MONITOR (SPEC) MODE

With CONSULT-II
Make sure that “MAS A/F SE-B1”, “B/FUEL SCHDL”, and “A/F ALPHA-B1”, “A/F ALPHA-B2” are within the SP value using CONSULT-II “DATA MONITOR (SPEC)” mode. Refer to EC-845, "Diagnostic Procedure" .

Are they within the SP value?

Yes >> GO TO 9.
No >> GO TO 8.

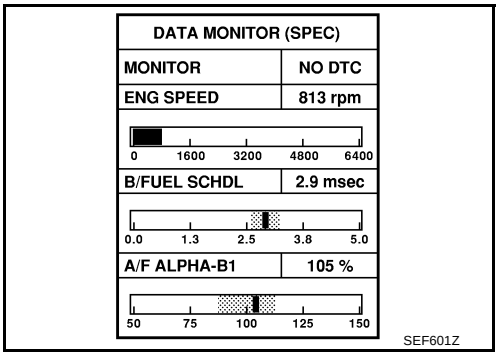

8. DETECT MALFUNCTIONING PART BY TROUBLE DIAGNOSIS - SPECIFICATION VALUE

Detect malfunctioning part according to EC-844, "TROUBLE DIAGNOSIS - SPECIFICATION VALUE" .

Is malfunctioning part detected?

Yes >> GO TO 11.
No >> GO TO 9.

9. DETECT MALFUNCTIONING SYSTEM BY SYMPTOM MATRIX CHART

Detect malfunctioning system according to EC-800, "Symptom Matrix Chart" based on the confirmed symptom in step 4, and determine the trouble diagnosis order based on possible causes and symptom.

>> GO TO 10.

10. DETECT MALFUNCTIONING PART BY DIAGNOSTIC PROCEDURE

Inspect according to Diagnostic Procedure of the system.

NOTE:
The Diagnostic Procedure in EC section described based on open circuit inspection. A short circuit inspection is also required for the circuit check in the Diagnostic Procedure. For details, refer to Circuit Inspection in GI-27, "How to Perform Efficient Diagnosis for an Electrical Incident" .

Is malfunctioning part detected?

Yes >> GO TO 11.
No >> Monitor input data from related sensors or check voltage of related ECM terminals using CONSULT-II. Refer to EC-838, "CONSULT-II Reference Value in Data Monitor" , EC-813, "ECM Terminals and Reference Value" .

11. REPAIR OR REPLACE THE MALFUNCTIONING PART

1. Repair or replace the malfunctioning part.
2. Reconnect parts or connectors disconnected during Diagnostic Procedure again after repair and replacement.
3. Check DTC. If DTC is displayed, erase it, refer to EC-758, "HOW TO ERASE EMISSION-RELATED DIAGNOSTIC INFORMATION" .

>> GO TO 12.

12. FINAL CHECK

When DTC was detected in step 2, perform DTC Confirmation Procedure or Overall Function Check again, and then make sure that the malfunction have been repaired securely.
When symptom was described from the customer, refer to confirmed symptom in step 3 or 4, and make sure that the symptom is not detected.

OK or NG

NG (DTC*1 is detected)>>GO TO 10.
NG (Symptom remains)>>GO TO 6.
OK >> 1. Before returning the vehicle to the customer, make sure to erase unnecessary DTC*1 in ECM and TCM (Transmission Control Module). (Refer to EC-758, "HOW TO ERASE EMISSION-RELATED DIAGNOSTIC INFORMATION" and AT-40, "HOW TO ERASE DTC" .)
2. If the completion of SRT is needed, drive vehicle under the specific driving pattern. Refer to EC-756, "Driving Pattern" .
3. **INSPECTION END**

*1: Include 1st trip DTC.
*2: Include 1st trip freeze frame data.

DIAGNOSTIC WORKSHEET

Description

There are many operating conditions that lead to the malfunction of engine components. A good grasp of such conditions can make troubleshooting faster and more accurate.
In general, each customer feels differently about a incident. It is important to fully understand the symptoms or conditions for a customer complaint.
Utilize a diagnostic worksheet like the one on the next page in order to organize all the information for troubleshooting.
Some conditions may cause the MIL to come on steady or blink and DTC to be detected. Examples:

- Vehicle ran out of fuel, which caused the engine to misfire.
- Fuel filler cap was left off or incorrectly screwed on, allowing fuel to evaporate into the atmosphere.

KEY POINTS

WHAT ..... Vehicle & engine model
WHEN ..... Date, Frequencies
WHERE..... Road conditions
HOW ..... Operating conditions, Weather conditions, Symptoms

SEF907L

Worksheet Sample

Customer name MR/MS		Model & Year	VIN
Engine #		Trans.	Mileage
Incident Date		Manuf. Date	In Service Date
Fuel and fuel filler cap		☐ Vehicle ran out of fuel causing misfire ☐ Fuel filler cap was left off or incorrectly screwed on.	
Symptoms	☐ Startability	☐ Impossible to start ☐ No combustion ☐ Partial combustion ☐ Partial combustion affected by throttle position ☐ Partial combustion NOT affected by throttle position ☐ Possible but hard to start ☐ Others [ ]	
	☐ Idling	☐ No fast idle ☐ Unstable ☐ High idle ☐ Low idle ☐ Others [ ]	
	☐ Driveability	☐ Stumble ☐ Surge ☐ Knock ☐ Lack of power ☐ Intake backfire ☐ Exhaust backfire ☐ Others [ ]	
	☐ Engine stall	☐ At the time of start ☐ While idling ☐ While accelerating ☐ While decelerating ☐ Just after stopping ☐ While loading	
Incident occurrence		☐ Just after delivery ☐ Recently ☐ In the morning ☐ At night ☐ In the daytime	
Frequency		☐ All the time ☐ Under certain conditions ☐ Sometimes	
Weather conditions		☐ Not affected	
	Weather	☐ Fine ☐ Raining ☐ Snowing ☐ Others [ ]	
	Temperature	☐ Hot ☐ Warm ☐ Cool ☐ Cold ☐ Humid ˚F	
Engine conditions		☐ Cold ☐ During warm-up ☐ After warm-up Engine speed 0 2,000 4,000 6,000 8,000 rpm	
Road conditions		☐ In town ☐ In suburbs ☐ Highway ☐ Off road (up/down)	
Driving conditions		☐ Not affected ☐ At starting ☐ While idling ☐ At racing ☐ While accelerating ☐ While cruising ☐ While decelerating ☐ While turning (RH/LH) Vehicle speed 0 10 20 30 40 50 60 MPH	
Malfunction indicator lamp		☐ Turned on ☐ Not turned on	

MTBL0017

DTC Inspection Priority Chart

ABS007HZ

If some DTCs are displayed at the same time, perform inspections one by one based on the following priority chart.

NOTE:
If DTC U1000 and/or U1001 is displayed with other DTC, first perform the trouble diagnosis for DTC U1000, U1001. Refer to EC-862 .

Priority	Detected items (DTC)
1	● U1000 U1001 CAN communication line ● P0101 P0102 P0103 Mass air flow sensor ● P0112 P0113 P0127 Intake air temperature sensor ● P0117 P0118 P0125 Engine coolant temperature sensor ● P0122 P0123 P0222 P0223 P1225 P1226 P2135 Throttle position sensor ● P0128 Thermostat function ● P0181 P0182 P0183 Fuel tank temperature sensor ● P0327 P0328 P0332 P0333 Knock sensor ● P0335 Crankshaft position sensor (POS) ● P0340 Camshaft position sensor (PHASE) ● P0460 P0461 P0462 P0463 Fuel level sensor ● P0500 Vehicle speed sensor ● P0605 ECM ● P0700 TCM ● P0705 Park/Neutral position (PNP) switch ● P1229 Sensor power supply ● P1610 - P1615 NATS ● P1706 Park/Neutral position (PNP) switch ● P2122 P2123 P2127 P2128 P2138 Accelerator pedal position sensor

Priority	Detected items (DTC)
2	● P0031P0032 P0051 P0052 Heated oxygen sensor 1 heater ● P0037 P0038 P0057 P0058 Heated oxygen sensor 2 heater ● P0132 P0133 P0134 P0152 P0153 P0154 P1143 P1144 P1163 P1164 Heated oxygen sensor 1 ● P0138 P0139 P0158 P0159 P1146 P1147 P1166 P1167 Heated oxygen sensor 2 ● P0441 EVAP control system purge flow monitoring ● P0444 P0445 P1444 EVAP canister purge volume control solenoid valve ● P0447 P1446 EVAP canister vent control valve ● P0451 P0452 P0453 EVAP control system pressure sensor ● P0550 Power steering pressure sensor ● P0710 P0720 P0740 P0744 P0745 P1716 P1720 P1730 P1752 P1754 P1757 P1759 P1762 P1764 P1767 P1769 P1772 P1774 A/T related sensors, solenoid valves and switches ● P1065 ECM power supply ● P1111 P1136 Intake valve timing control solenoid valve ● P1122 Electric throttle control function ● P1124 P1126 P1128 Electric throttle control actuator ● P1140 P1145 Intake valve timing control position sensor ● P1217 Engine over temperature (OVERHEAT) ● P1805 Brake switch
3	● P0011 P0021 Intake valve timing control ● P0171 P0172 P0174 P0175 Fuel injection system function ● P0300 - P0308 Misfire ● P0420 P0430 Three way catalyst function ● P0442 P0456 EVAP control system (SMALL LEAK, VERY SMALL LEAK) ● P0455 EVAP control system (GROSS LEAK) ● P0506 P0507 Idle speed control system ● P1121 Electric throttle control actuator ● P1148 P1168 Closed loop control ● P1211 TCS control unit ● P1212 TCS communication line ● P1564 ICC steering switch/ASCD steering switch ● P1568 ICC command value ● P1572 ICC brake switch/ASCD brake switch ● P1574 ICC vehicle speed sensor/ASCD vehicle speed sensor ● P1780 Shift change signal ● P1800 VIAS control solenoid valve

Fail-Safe Chart

ABS007I0

When the DTC listed below is detected, the ECM enters fail-safe mode and the MIL lights up.

DTC No.	Detected items	Engine operating condition in fail-safe mode
P0102 P0103	Mass air flow sensor circuit	Engine speed will not rise more than 2,400 rpm due to the fuel cut.
P0117 P0118	Engine coolant temperature sensor circuit	Engine coolant temperature will be determined by ECM based on the time after turning ignition switch ON or START. CONSULT-II displays the engine coolant temperature decided by ECM.
		Condition: Just as ignition switch is turned ON or START — Engine coolant temperature decided (CONSULT-II display): 40°C (104°F)
		Condition: More than approx. 4 minutes after ignition ON or START — Engine coolant temperature decided (CONSULT-II display): 80°C (176°F)
		Condition: Except as shown above — Engine coolant temperature decided (CONSULT-II display): 40 - 80°C (104 - 176°F) (Depends on the time)
		When the fail-safe system for engine coolant temperature sensor is activated, the cooling fan operates while engine is running.
P0122 P0123 P0222 P0223 P2135	Throttle position sensor	The ECM controls the electric throttle control actuator in regulating the throttle opening in order for the idle position to be within +10 degrees. The ECM regulates the opening speed of the throttle valve to be slower than the normal condition. So, the acceleration will be poor.
P1121	Electric throttle control actuator	(When electric throttle control actuator does not function properly due to the return spring malfunction:) ECM controls the electric throttle actuator by regulating the throttle opening around the idle position. The engine speed will not rise more than 2,000 rpm.
		(When throttle valve opening angle in fail-safe mode is not in specified range:) ECM controls the electric throttle control actuator by regulating the throttle opening to 20 degrees or less.
		(When ECM detects the throttle valve is stuck open:) While the vehicle is driving, it slows down gradually by fuel cut. After the vehicle stops, the engine stalls. The engine can restart in N or P position, and engine speed will not exceed 1,000 rpm or more.
P1122	Electric throttle control function	ECM stops the electric throttle control actuator control, throttle valve is maintained at a fixed opening (approx. 5 degrees) by the return spring.
P1124 P1126	Throttle control motor relay	ECM stops the electric throttle control actuator control, throttle valve is maintained at a fixed opening (approx. 5 degrees) by the return spring.
P1128	Throttle control motor	ECM stops the electric throttle control actuator control, throttle valve is maintained at a fixed opening (approx. 5 degrees) by the return spring.
P1229	Sensor power supply	ECM stops the electric throttle control actuator control, throttle valve is maintained at a fixed opening (approx. 5 degrees) by the return spring.
P2122 P2123 P2127 P2128 P2138	Accelerator pedal position sensor	The ECM controls the electric throttle control actuator in regulating the throttle opening in order for the idle position to be within +10 degrees. The ECM regulates the opening speed of the throttle valve to be slower than the normal condition. So, the acceleration will be poor.

- When there is an open circuit on MIL circuit, the ECM cannot warn the driver by lighting up MIL when there is malfunction on engine control system.
  Therefore, when electrical controlled throttle and part of ECM related diagnoses are continuously detected as NG for 5 trips, ECM warns the driver that engine control system malfunctions and MIL circuit is open by means of operating fail-safe function.
  The fail-safe function also operates when above diagnoses except MIL circuit are detected and demands the driver to repair the malfunction.

Engine operating condition in fail-safe mode	Engine speed will not rise more than 2,500 rpm due to the fuel cut

Symptom Matrix Chart

ABS007I2

SYSTEM — BASIC ENGINE CONTROL SYSTEM

		SYMPTOM													Reference page
		HARD/NO START/RESTART (EXCP. HA)	ENGINE STALL	HESITATION/SURGING/FLAT SPOT	SPARK KNOCK/DETONATION	LACK OF POWER/POOR ACCELERATION	HIGH IDLE/LOW IDLE	ROUGH IDLE/HUNTING	IDLING VIBRATION	SLOW/NO RETURN TO IDLE	OVERHEATS/WATER TEMPERATURE HIGH	EXCESSIVE FUEL CONSUMPTION	EXCESSIVE OIL CONSUMPTION	BATTERY DEAD (UNDER CHARGE)	
Warranty symptom code		AA	AB	AC	AD	AE	AF	AG	AH	AJ	AK	AL	AM	HA	
Fuel	Fuel pump circuit	1	1	2	3	2		2	2			3		2	EC-1358
	Fuel pressure regulator system	3	3	4	4	4	4	4	4	4		4			EC-789
	Injector circuit	1	1	2	3	2		2	2			2			EC-1351
	Evaporative emission system	3	3	4	4	4	4	4	4	4		4			EC-730
Air	Positive crankcase ventilation system	3	3	4	4	4	4	4	4	4		4	1		EC-742
	Incorrect idle speed adjustment						1	1	1	1		1			EC-769
	Electric throttle control actuator	1	1	2	3	3	2	2	2	2		2		2	EC-1148, EC-1150
Ignition	Incorrect ignition timing adjustment	3	3	1	1	1		1	1			1			EC-769
	Ignition circuit	1	1	2	2	2		2	2			2			EC-1339
Main power supply and ground circuit		2	2	3	3	3		3	3		2	3			EC-855
Mass air flow sensor circuit		1	1	2	2	2		2	2			2			EC-893, EC-902 ,
Engine coolant temperature sensor circuit					3		3			3					EC-914, EC-927
Heated oxygen sensor 1 circuit															EC-935, EC-944 , EC-956 , EC-1174 , EC-1180
Throttle position sensor circuit							2			2					EC-920, EC-1015 , EC-1225 , EC-1227 , EC-1229 , EC-1316
Accelerator pedal position sensor circuit				3	2	1									EC-1302, EC-1309 , EC-1323
Knock sensor circuit				2								3			EC-1031
Crankshaft position sensor (POS) circuit		2	2												EC-1036
Camshaft position sensor (PHASE) circuit		3	2												EC-1043
Vehicle speed signal circuit			2	3		3						3			EC-1123
Power steering pressure sensor circuit			2					3	3						EC-1129

	SYMPTOM													Reference page
	HARD/NO START/RESTART (EXCP. HA)	ENGINE STALL	HESITATION/SURGING/FLAT SPOT	SPARK KNOCK/DETONATION	LACK OF POWER/POOR ACCELERATION	HIGH IDLE/LOW IDLE	ROUGH IDLE/HUNTING	IDLING VIBRATION	SLOW/NO RETURN TO IDLE	OVERHEATS/WATER TEMPERATURE HIGH	EXCESSIVE FUEL CONSUMPTION	EXCESSIVE OIL CONSUMPTION	BATTERY DEAD (UNDER CHARGE)	
Warranty symptom code	AA	AB	AC	AD	AE	AF	AG	AH	AJ	AK	AL	AM	HA	
ECM	2	2	3	3	3	3	3	3	3	3	3			EC-1134, EC-1137
Intake valve timing control solenoid valve circuit		3	2		1	3	2	2	3		3			EC-1141
PNP switch circuit			3		3		3	3			3			EC-1283
Refrigerant pressure sensor circuit		2				3			3		4			EC-1364
Electrical load signal circuit							3							EC-1369
Air conditioner circuit	2	2	3	3	3	3	3	3	3		3		2	ATC-40
VIAS control solenoid valve circuit					1									EC-1292
ABS actuator and electric unit (control unit)			4											EC-1211

1 - 6: The numbers refer to the order of inspection.
(continued on next page)

SYSTEM — ENGINE MECHANICAL & OTHER

		SYMPTOM													Reference page
		HARD/NO START/RESTART (EXCP. HA)	ENGINE STALL	HESITATION/SURGING/FLAT SPOT	SPARK KNOCK/DETONATION	LACK OF POWER/POOR ACCELERATION	HIGH IDLE/LOW IDLE	ROUGH IDLE/HUNTING	IDLING VIBRATION	SLOW/NO RETURN TO IDLE	OVERHEATS/WATER TEMPERATURE HIGH	EXCESSIVE FUEL CONSUMPTION	EXCESSIVE OIL CONSUMPTION	BATTERY DEAD (UNDER CHARGE)	
Warranty symptom code		AA	AB	AC	AD	AE	AF	AG	AH	AJ	AK	AL	AM	HA	
Fuel	Fuel tank	5	5												FL-10
	Fuel piping			5	5	5		5	5			5			EM-192
	Vapor lock														—
	Valve deposit	5		5	5	5		5	5			5			—
	Poor fuel (Heavy weight gasoline, Low octane)														—

		SYMPTOM													Reference page
		HARD/NO START/RESTART (EXCP. HA)	ENGINE STALL	HESITATION/SURGING/FLAT SPOT	SPARK KNOCK/DETONATION	LACK OF POWER/POOR ACCELERATION	HIGH IDLE/LOW IDLE	ROUGH IDLE/HUNTING	IDLING VIBRATION	SLOW/NO RETURN TO IDLE	OVERHEATS/WATER TEMPERATURE HIGH	EXCESSIVE FUEL CONSUMPTION	EXCESSIVE OIL CONSUMPTION	BATTERY DEAD (UNDER CHARGE)	
Warranty symptom code		AA	AB	AC	AD	AE	AF	AG	AH	AJ	AK	AL	AM	HA	
Air	Air duct		5	5		5		5	5			5			EM-176
	Air cleaner														EM-176
	Air leakage from air duct (Mass air flow sensor — electric throttle control actuator)	5			5		5			5					EM-176
	Electric throttle control actuator														EM-178
	Air leakage from intake manifold/ Collector/Gasket														EM-178
Cranking	Battery	1	1	1		1		1	1			1		1	SC-4
	Generator circuit														SC-23
	Starter circuit	3													SC-10
	Signal plate	6													EM-245
	PNP switch	4													AT-114
Engine	Cylinder head	5	5	5	5	5		5	5			5			EM-229
	Cylinder head gasket										4		3		
	Cylinder block	6	6	6	6	6		6	6			6	4		EM-245
	Piston														
	Piston ring														
	Connecting rod														
	Bearing														
	Crankshaft														
Valve mecha-nism	Timing chain	5	5	5	5	5		5	5			5			EM-200
	Camshaft														EM-212
	Intake valve timing control														EM-200
	Intake valve												3		EM-200
	Exhaust valve														
Exhaust	Exhaust manifold/Tube/Muffler/ Gasket	5	5	5	5	5		5	5			5			EM-182, EX-3
	Three way catalyst														
Lubrica-tion	Oil pan/Oil strainer/Oil pump/Oil filter/Oil gallery/Oil cooler	5	5	5	5	5		5	5			5			EM-185, LU-31 , LU-28 , LU-29
	Oil level (Low)/Filthy oil														LU-25

		SYMPTOM													Reference page
		HARD/NO START/RESTART (EXCP. HA)	ENGINE STALL	HESITATION/SURGING/FLAT SPOT	SPARK KNOCK/DETONATION	LACK OF POWER/POOR ACCELERATION	HIGH IDLE/LOW IDLE	ROUGH IDLE/HUNTING	IDLING VIBRATION	SLOW/NO RETURN TO IDLE	OVERHEATS/WATER TEMPERATURE HIGH	EXCESSIVE FUEL CONSUMPTION	EXCESSIVE OIL CONSUMPTION	BATTERY DEAD (UNDER CHARGE)	
Warranty symptom code		AA	AB	AC	AD	AE	AF	AG	AH	AJ	AK	AL	AM	HA	
Cooling	Radiator/Hose/Radiator filler cap	5	5	5	5	5		5	5		4	5			CO-41, CO-45
	Thermostat									5					CO-53
	Water pump														CO-51
	Water gallery														CO-35
	Cooling fan									5					CO-49
	Coolant level (Low)/Contaminated coolant														CO-37
IVIS (INFINITI Vehicle Immobilizer System — NATS)		1	1												EC-744 or BL-213

1 - 6: The numbers refer to the order of inspection.

Engine Control Component Parts Location

ABS007I3

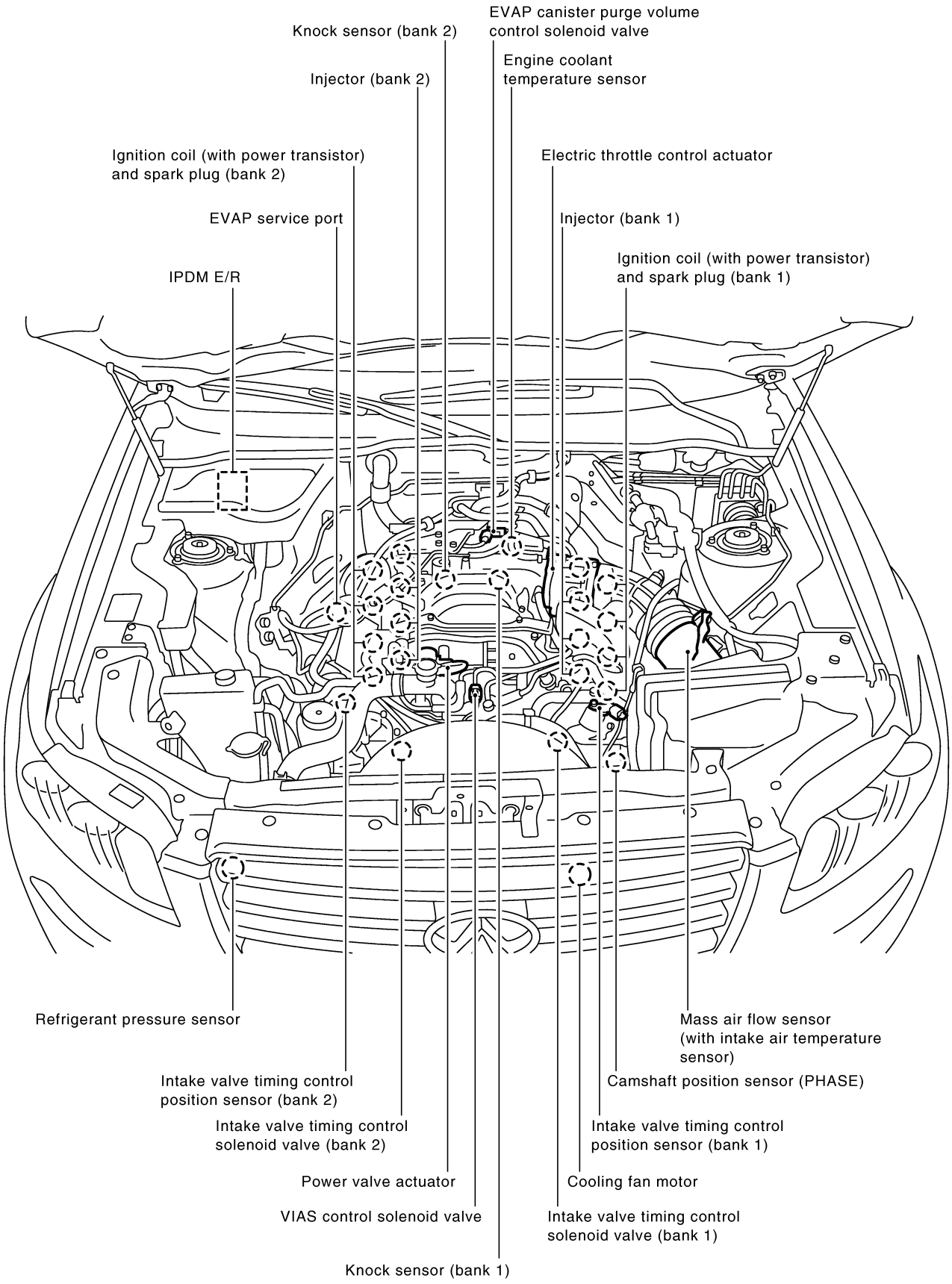

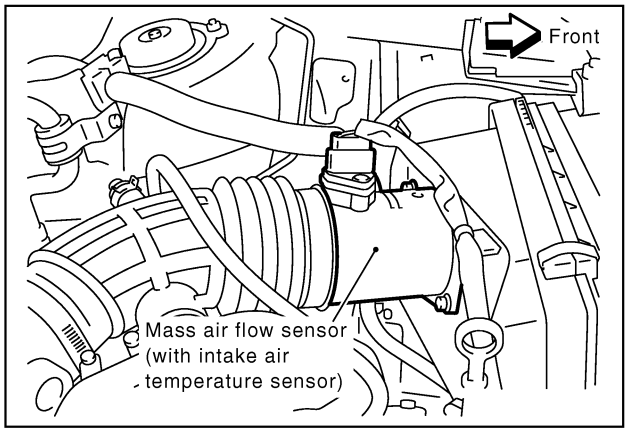
Front
Mass air flow sensor
(with intake air
temperature sensor)

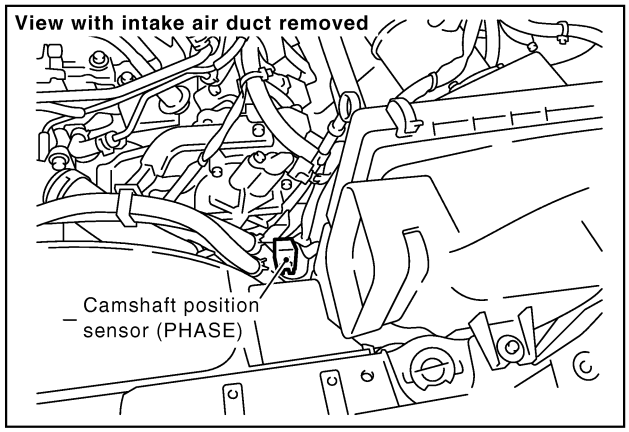
View with intake air duct removed
Camshaft position
sensor (PHASE)

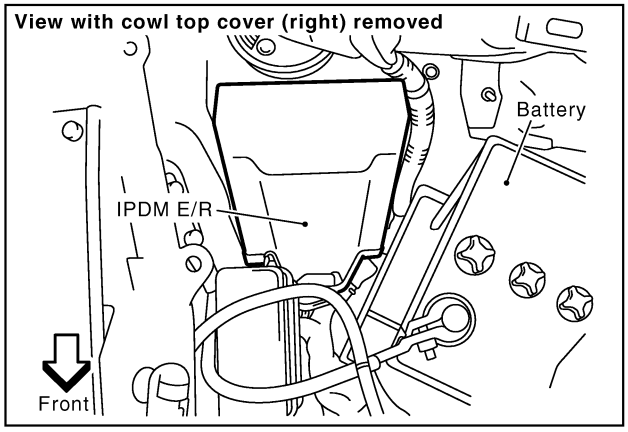
View with cowl top cover (right) removed
Battery
IPDM E/R
Front

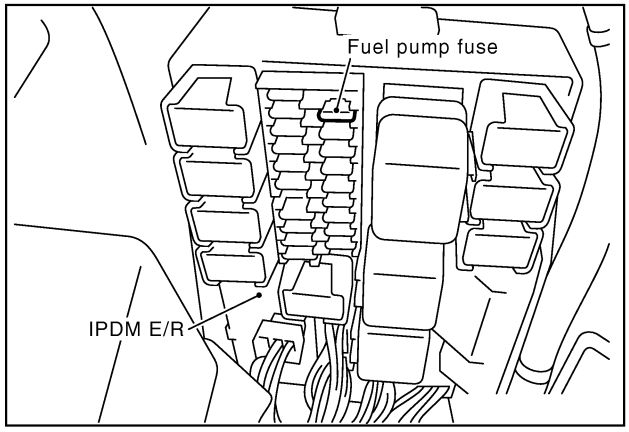
Fuel pump fuse
IPDM E/R

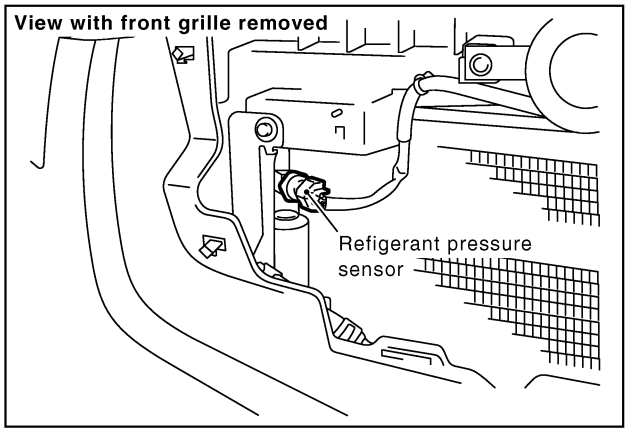
View with front grille removed
Refigerant pressure
sensor

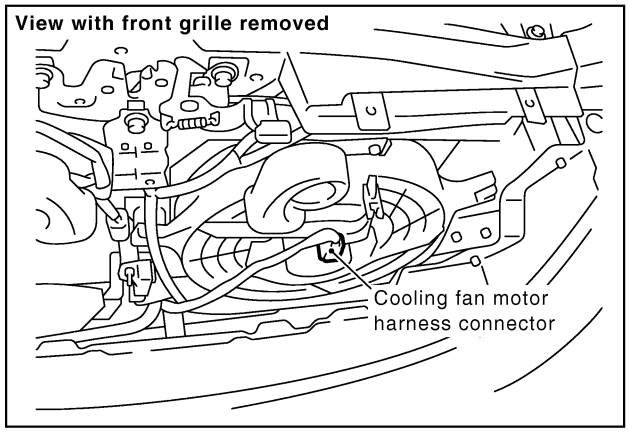
View with front grille removed
Cooling fan motor
harness connector

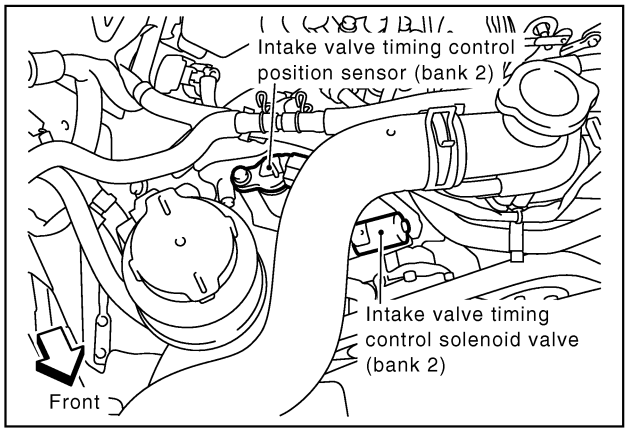
Intake valve timing control
position sensor (bank 2)
Intake valve timing
control solenoid valve
(bank 2)
Front

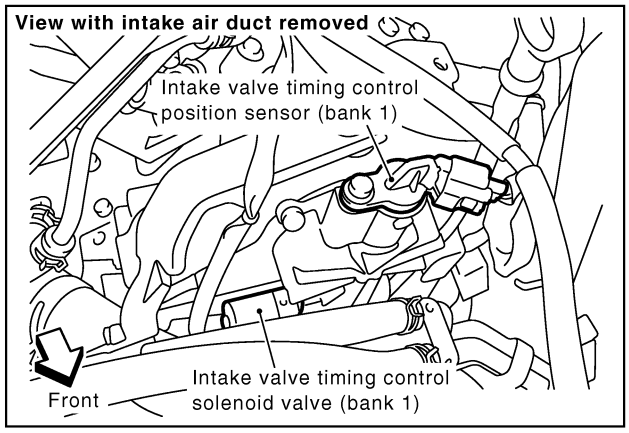
View with intake air duct removed
Intake valve timing control
position sensor (bank 1)
Intake valve timing control
solenoid valve (bank 1)
Front

PBIB2555E

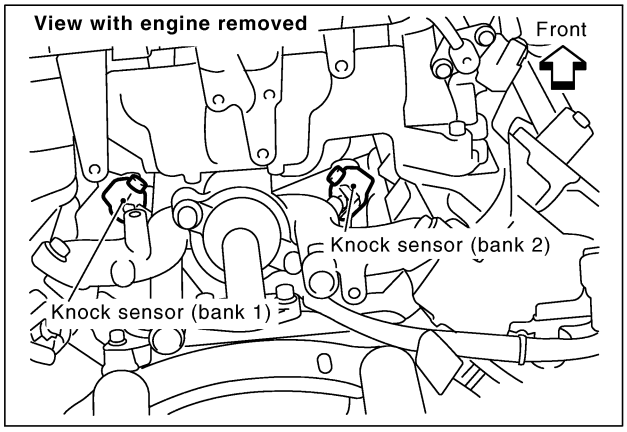
View with engine removed
Front
Knock sensor (bank 2)
Knock sensor (bank 1)

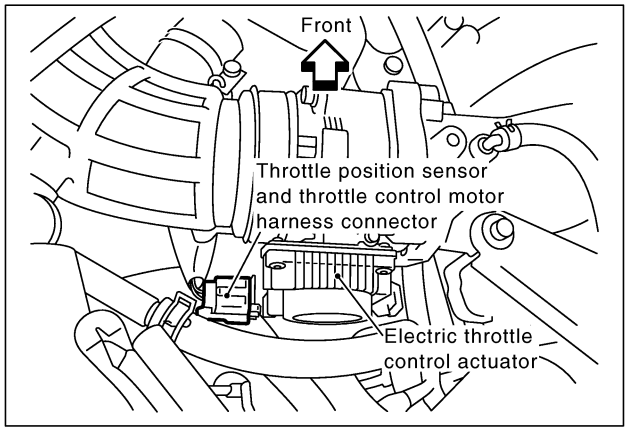
Front
Throttle position sensor
and throttle control motor
harness connector
Electric throttle
control actuator

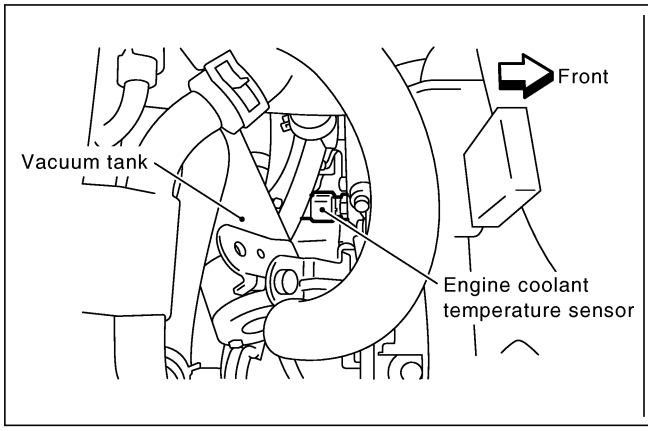
Front
Vacuum tank
Engine coolant
temperature sensor

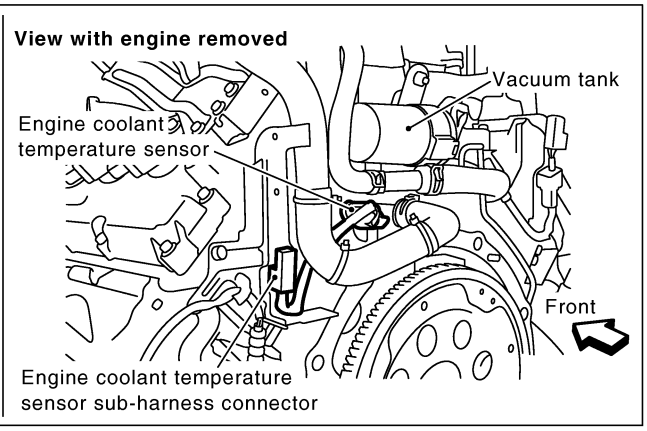
View with engine removed
Vacuum tank
Engine coolant
temperature sensor
Front
Engine coolant temperature
sensor sub-harness connector

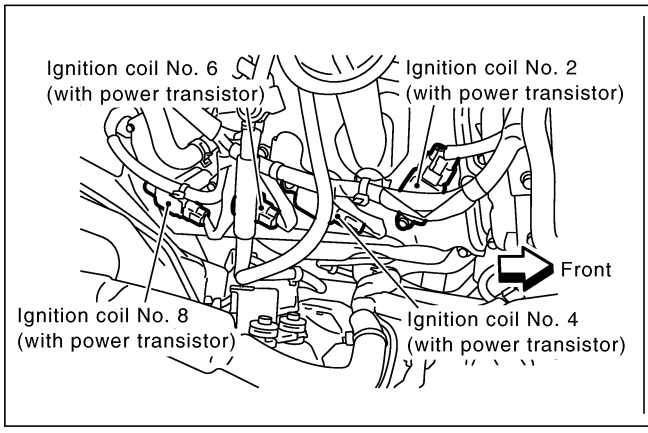
Ignition coil No. 6
(with power transistor)
Ignition coil No. 2
(with power transistor)
Front
Ignition coil No. 8
(with power transistor)
Ignition coil No. 4
(with power transistor)

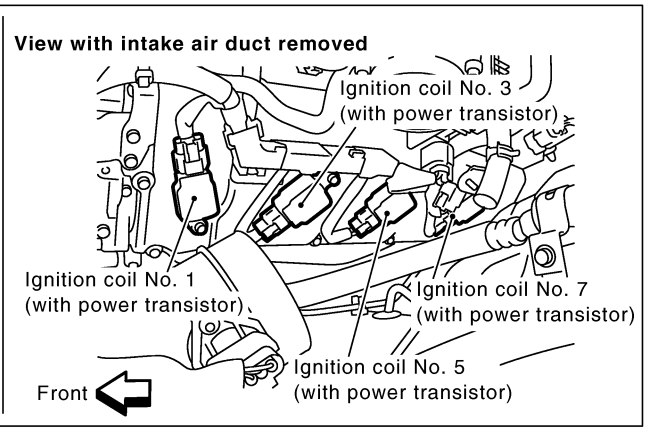
View with intake air duct removed
Ignition coil No. 3
(with power transistor)
Ignition coil No. 1
(with power transistor)
Ignition coil No. 7
(with power transistor)
Ignition coil No. 5
(with power transistor)
Front

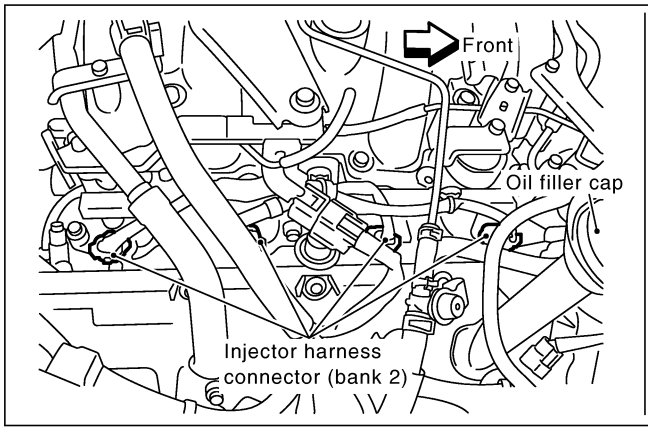
Front
Oil filler cap
Injector harness
connector (bank 2)

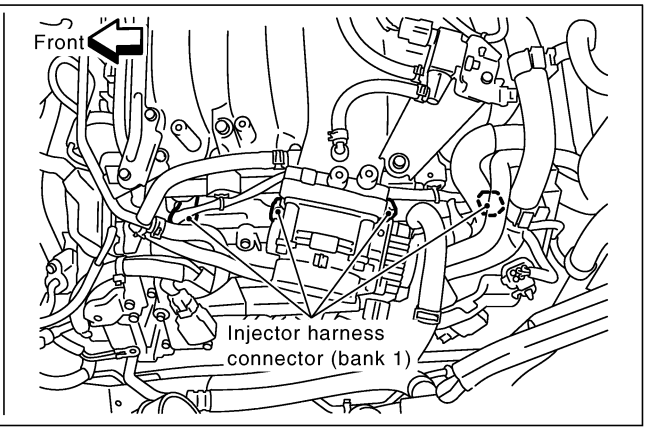
Front
Injector harness
connector (bank 1)

PBIB1545E

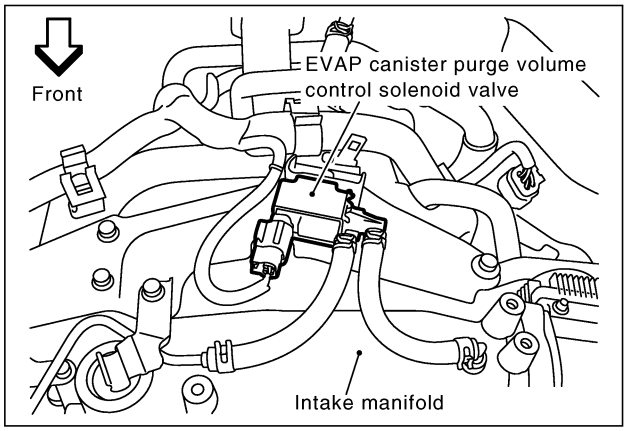
Front
EVAP canister purge volume control solenoid valve
Intake manifold

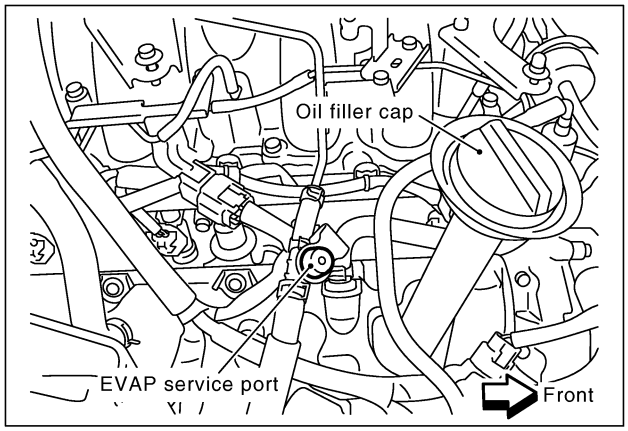
Oil filler cap
EVAP service port
Front

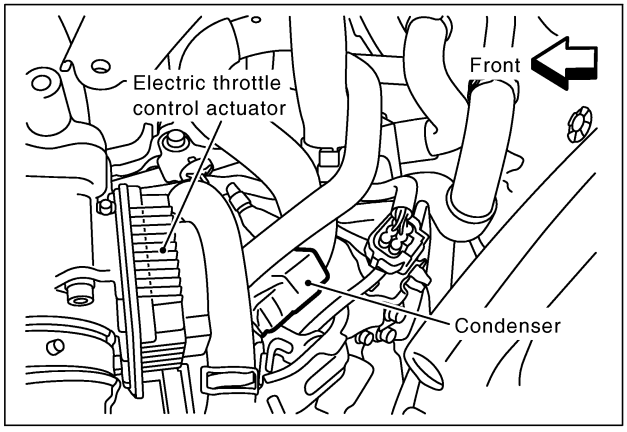
Front
Electric throttle control actuator
Condenser

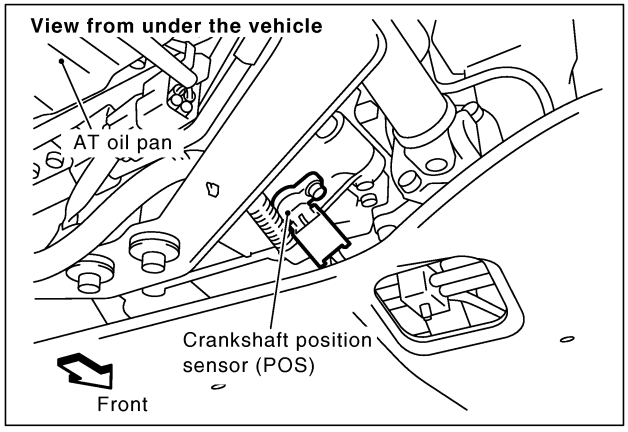
View from under the vehicle
AT oil pan
Crankshaft position sensor (POS)
Front

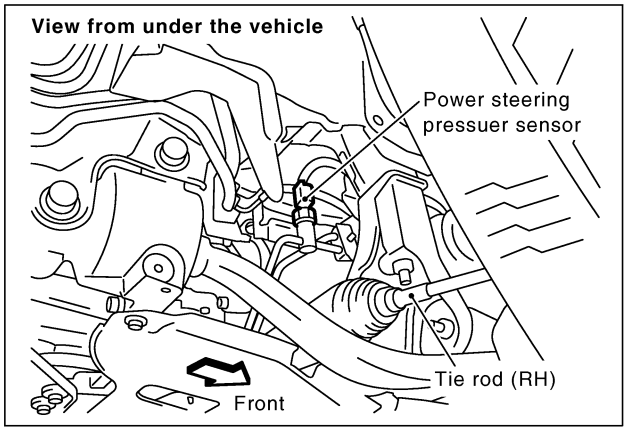
View from under the vehicle
Power steering pressuer sensor
Tie rod (RH)
Front

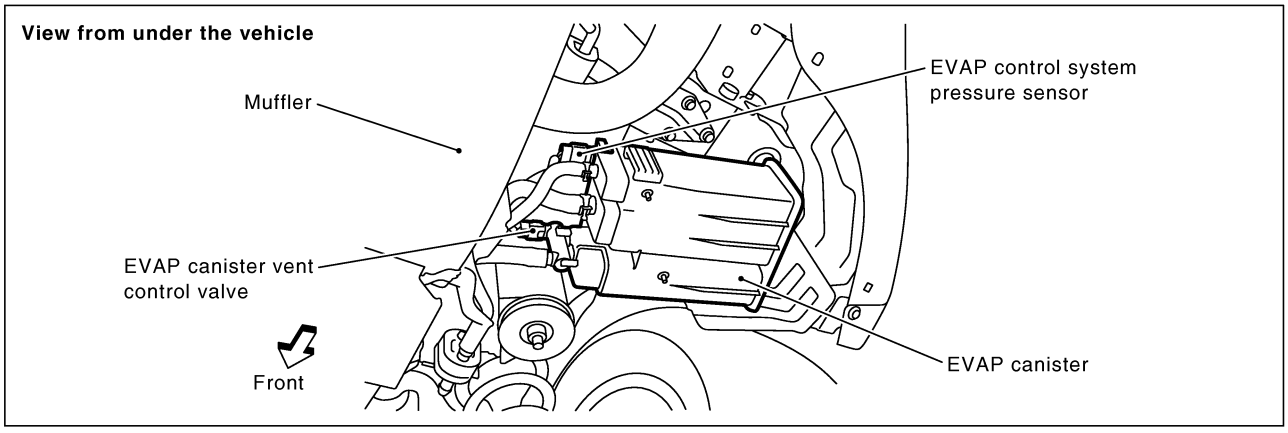
View from under the vehicle
Muffler
EVAP control system pressure sensor
EVAP canister vent control valve
EVAP canister
Front

PBIB1546E

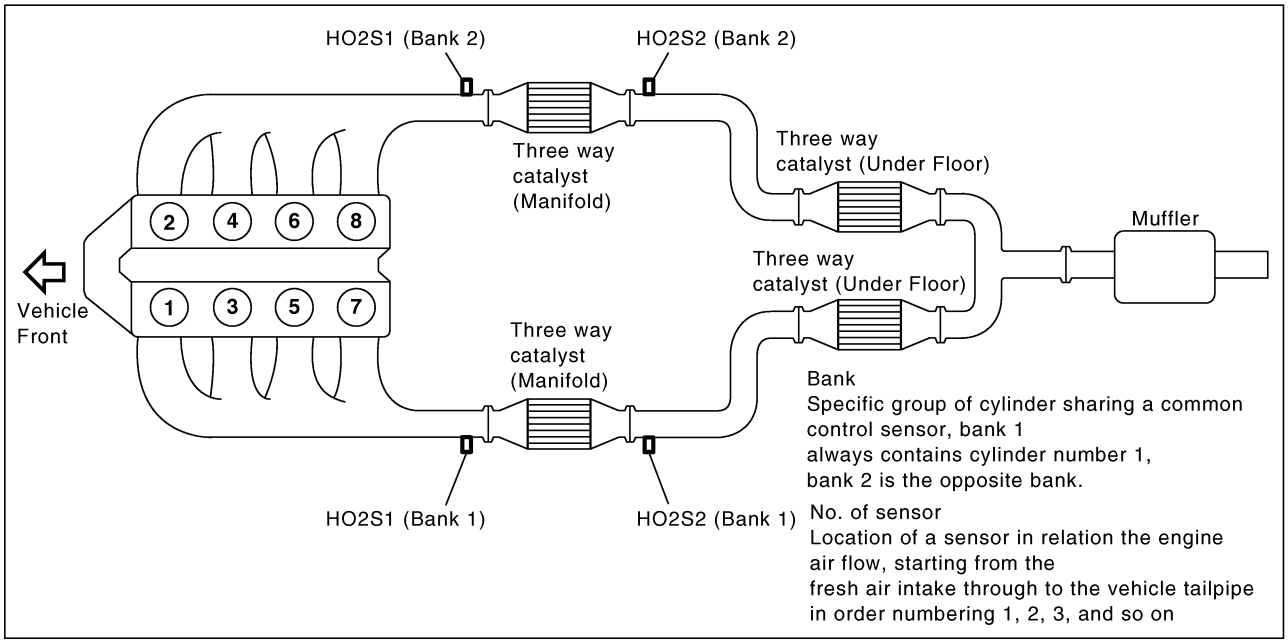
HO2S1 (Bank 2)
HO2S2 (Bank 2)
Three way catalyst (Manifold)
Three way catalyst (Under Floor)
Muffler
Three way catalyst (Under Floor)
Vehicle Front
Three way catalyst (Manifold)
Bank
Specific group of cylinder sharing a common control sensor, bank 1 always contains cylinder number 1, bank 2 is the opposite bank.
HO2S1 (Bank 1)
HO2S2 (Bank 1)
No. of sensor
Location of a sensor in relation the engine air flow, starting from the fresh air intake through to the vehicle tailpipe in order numbering 1, 2, 3, and so on

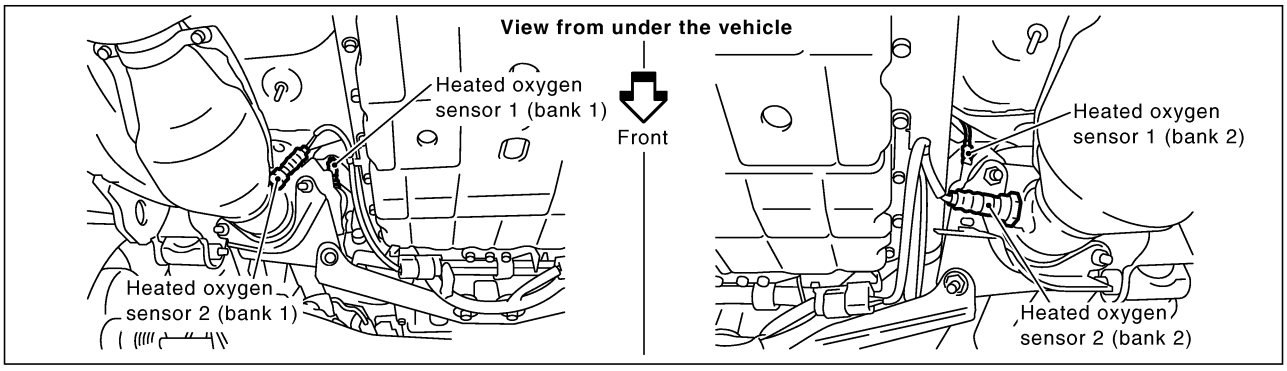
View from under the vehicle
Heated oxygen sensor 1 (bank 1)
Front
Heated oxygen sensor 1 (bank 2)
Heated oxygen sensor 2 (bank 1)
Heated oxygen sensor 2 (bank 2)

PBIB1543E

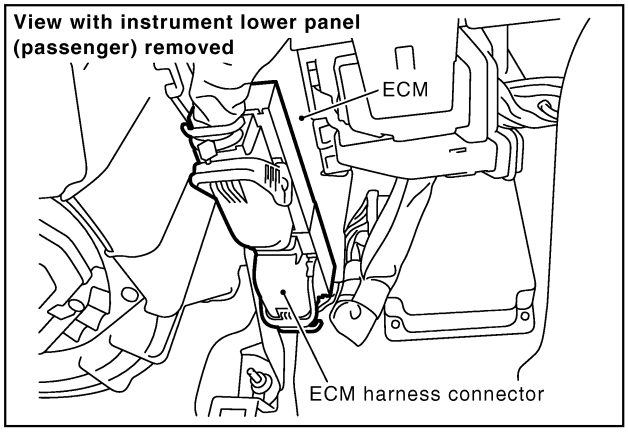
View with instrument lower panel (passenger) removed
ECM
ECM harness connector

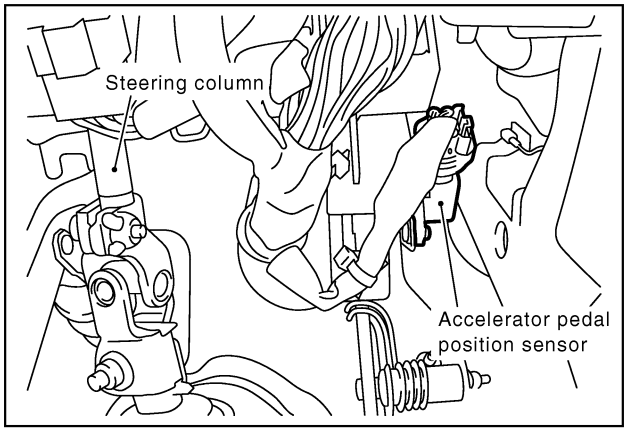
Steering column
Accelerator pedal position sensor

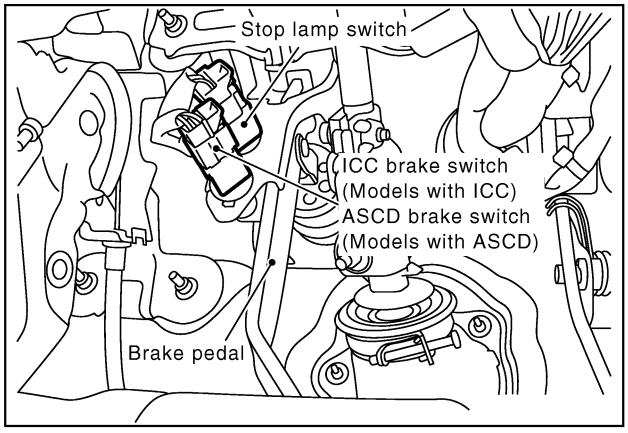
Stop lamp switch
ICC brake switch (Models with ICC)
ASCD brake switch (Models with ASCD)
Brake pedal

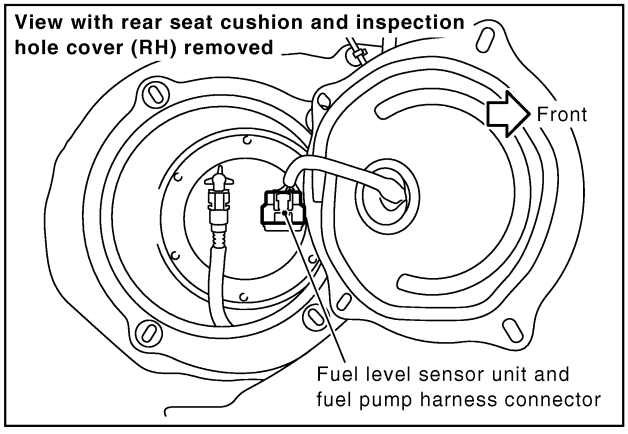
View with rear seat cushion and inspection hole cover (RH) removed
Front
Fuel level sensor unit and fuel pump harness connector

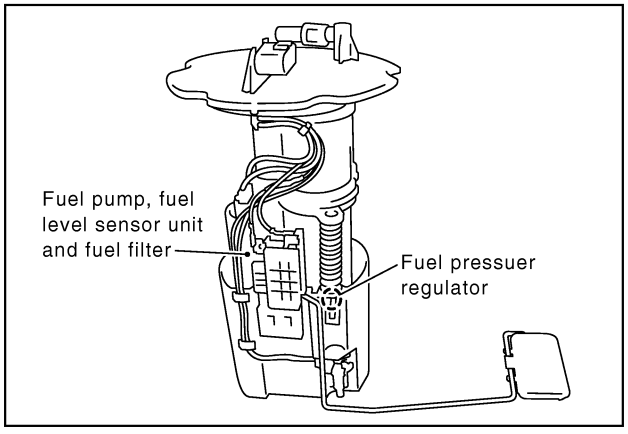
Fuel pump, fuel level sensor unit and fuel filter
Fuel pressuer regulator

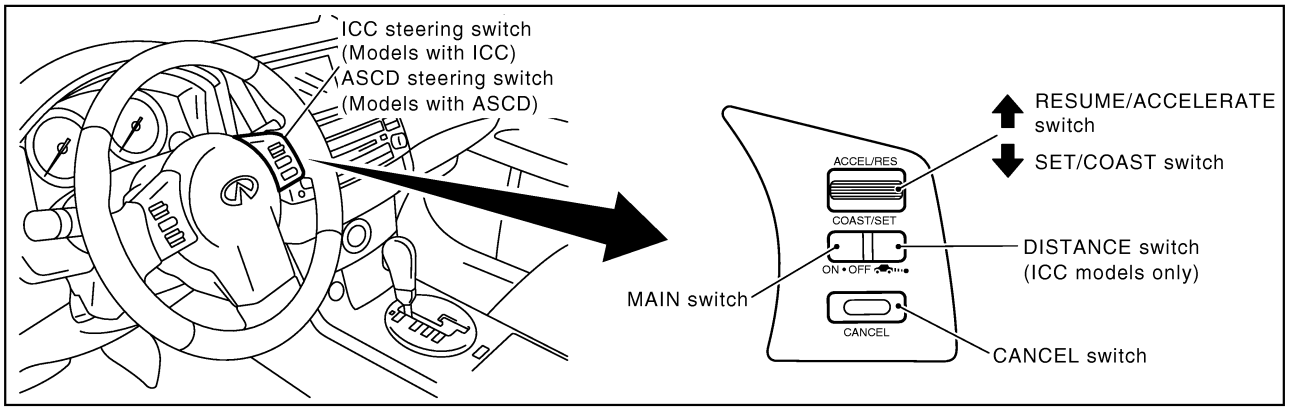
ICC steering switch (Models with ICC)
ASCD steering switch (Models with ASCD)
ACCEL/RES
COAST/SET
ON • OFF
CANCEL
RESUME/ACCELERATE switch
SET/COAST switch
DISTANCE switch (ICC models only)
MAIN switch
CANCEL switch

PBIB2556E

Vacuum Hose Drawing

ABS007HF

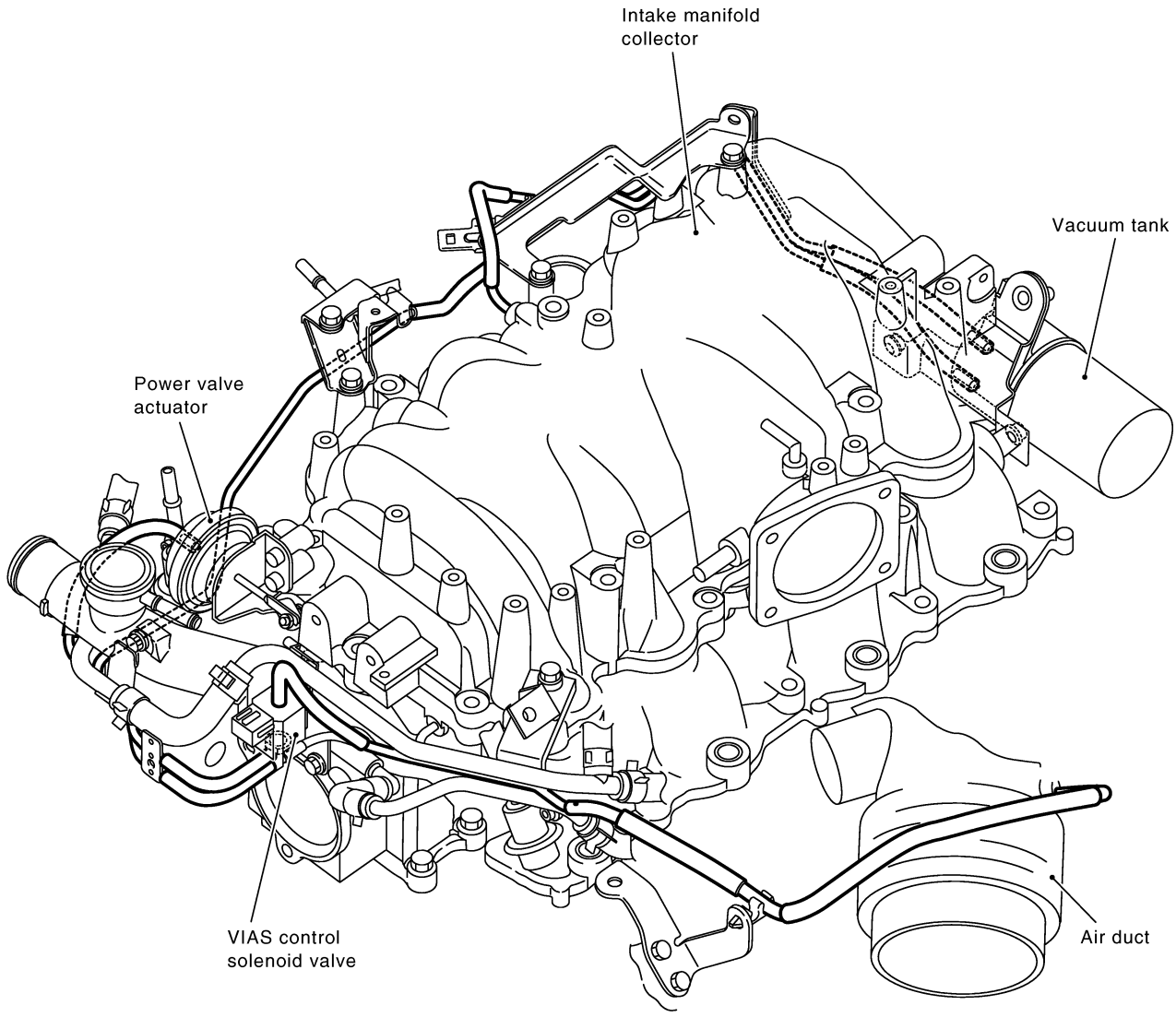

NOTE:
Do not use soapy water or any type of solvent while installing vacuum hoses or purge hoses.

PBIB1143E

Refer to EC-721, "System Diagram" for Vacuum Control System.

Circuit Diagram

ABS007I4

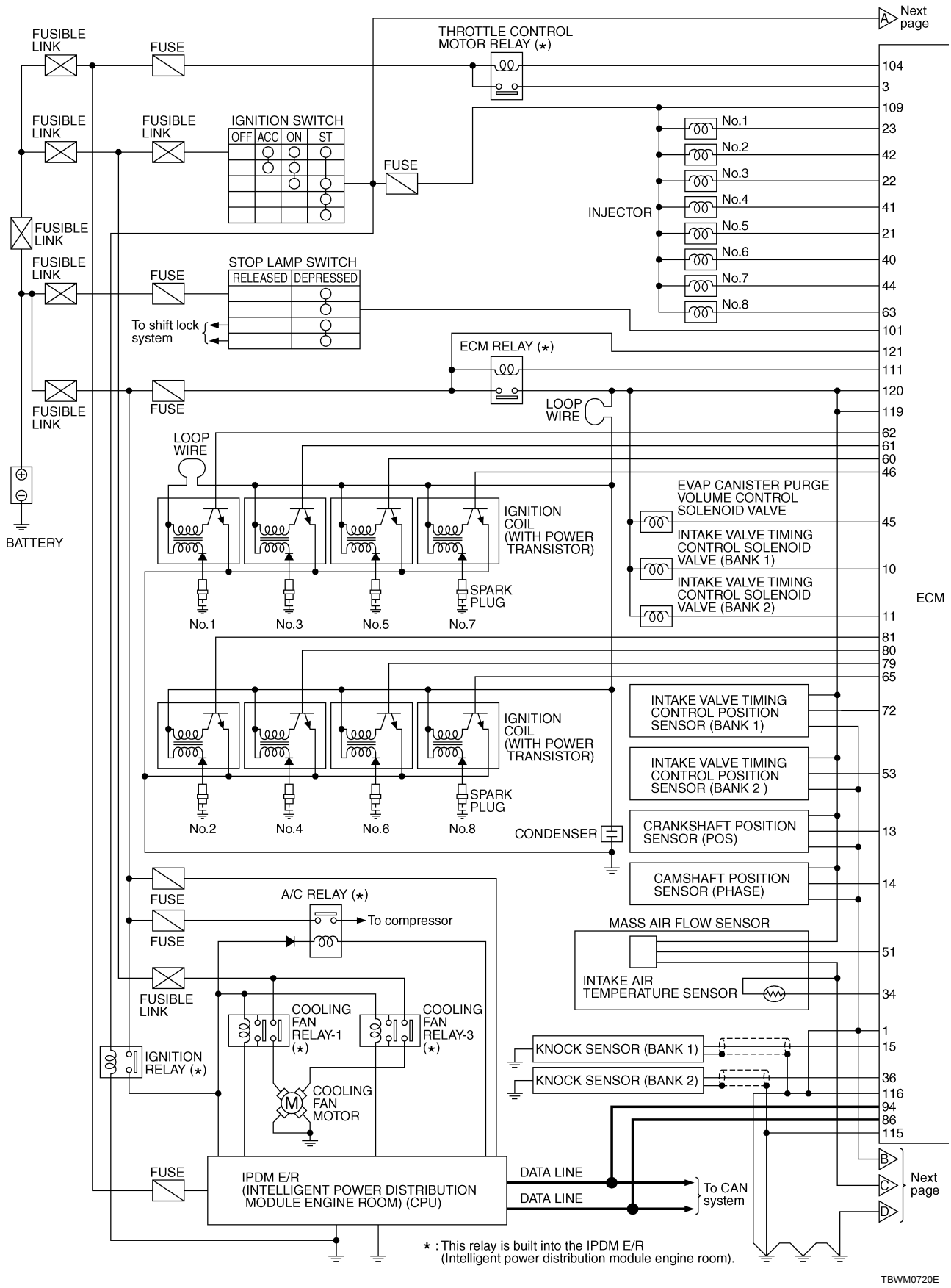

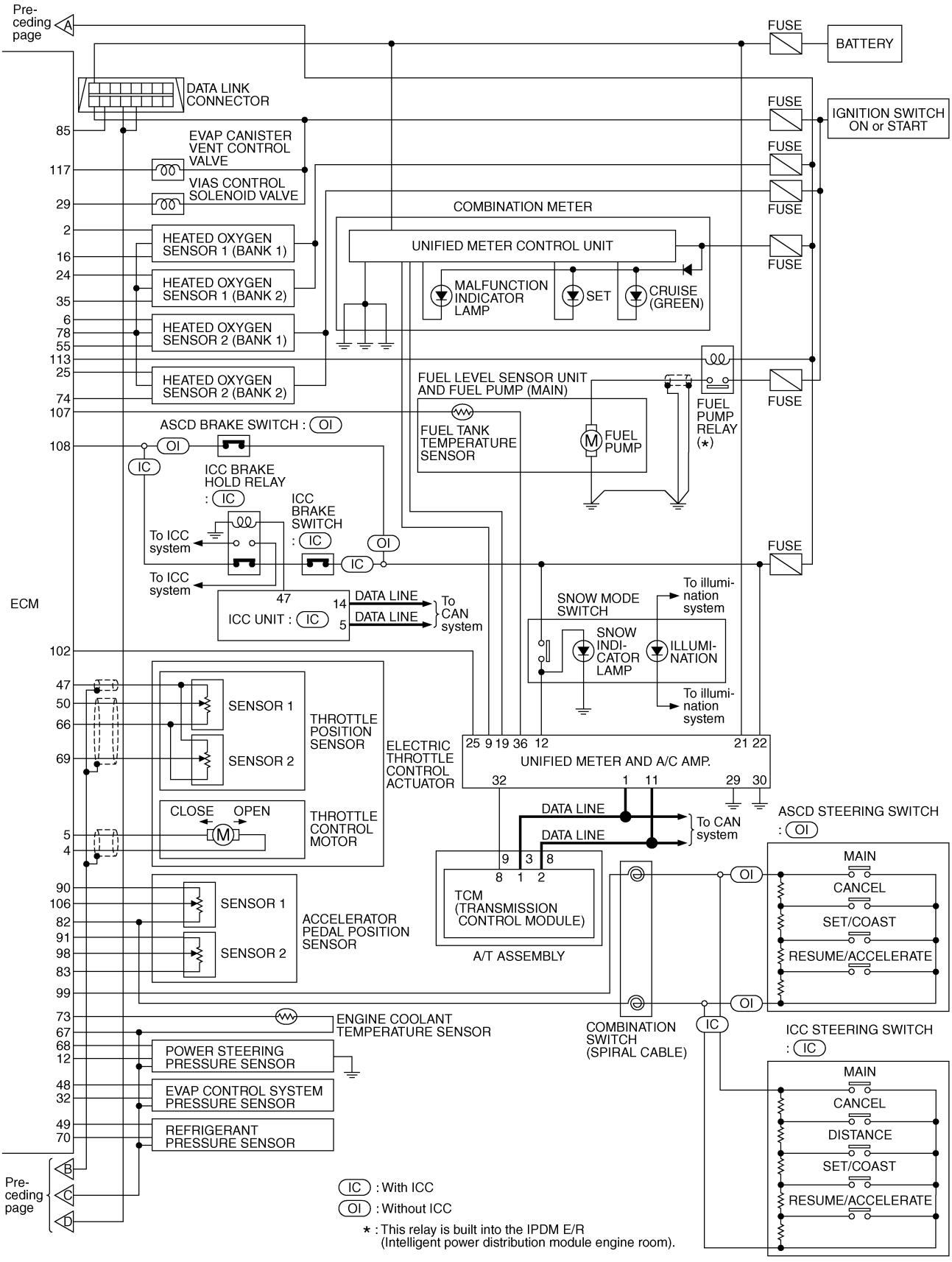
Pre-ceding page
A
FUSE
BATTERY
DATA LINK CONNECTOR
IGNITION SWITCH ON or START
85
EVAP CANISTER VENT CONTROL VALVE
117
VIAS CONTROL SOLENOID VALVE
29
COMBINATION METER
2
HEATED OXYGEN SENSOR 1 (BANK 1)
16
UNIFIED METER CONTROL UNIT
24
HEATED OXYGEN SENSOR 1 (BANK 2)
35
MALFUNCTION INDICATOR LAMP
SET
CRUISE (GREEN)
6
78
HEATED OXYGEN SENSOR 2 (BANK 1)
55
113
25
HEATED OXYGEN SENSOR 2 (BANK 2)
74
FUEL LEVEL SENSOR UNIT AND FUEL PUMP (MAIN)
107
FUEL TANK TEMPERATURE SENSOR
FUEL PUMP
FUEL PUMP RELAY (*)
ASCD BRAKE SWITCH : OI
108
OI
IC
ICC BRAKE HOLD RELAY : IC
ICC BRAKE SWITCH : IC
To ICC system
To ICC system
ECM
47
14
DATA LINE
DATA LINE
To CAN system
ICC UNIT : IC
5
SNOW MODE SWITCH
To illumi-nation system
SNOW INDI-CATOR LAMP
ILLUMI-NATION
To illumi-nation system
102
47
50
66
69
SENSOR 1
SENSOR 2
THROTTLE POSITION SENSOR
ELECTRIC THROTTLE CONTROL ACTUATOR
25 9 19 36 12
21 22
UNIFIED METER AND A/C AMP.
32
1 11
29 30
CLOSE
OPEN
THROTTLE CONTROL MOTOR
5
4
DATA LINE
DATA LINE
To CAN system
ASCD STEERING SWITCH : OI
9 3 8
8 1 2
TCM (TRANSMISSION CONTROL MODULE)
A/T ASSEMBLY
MAIN
CANCEL
SET/COAST
RESUME/ACCELERATE
90
106
82
91
98
83
99
SENSOR 1
SENSOR 2
ACCELERATOR PEDAL POSITION SENSOR
73
67
68
12
ENGINE COOLANT TEMPERATURE SENSOR
POWER STEERING PRESSURE SENSOR
COMBINATION SWITCH (SPIRAL CABLE)
ICC STEERING SWITCH : IC
48
32
EVAP CONTROL SYSTEM PRESSURE SENSOR
49
70
REFRIGERANT PRESSURE SENSOR
MAIN
CANCEL
DISTANCE
SET/COAST
RESUME/ACCELERATE
B
C
D
Pre-ceding page
IC : With ICC
OI : Without ICC
* : This relay is built into the IPDM E/R (Intelligent power distribution module engine room).
TBWM0721E

ECM Harness Connector Terminal Layout

ABS007I5

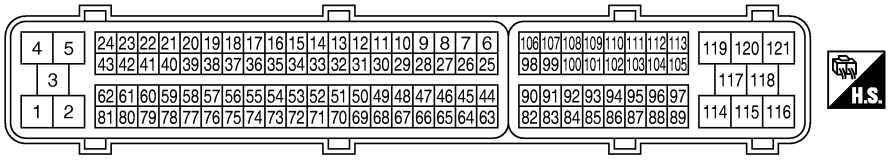

PBIB1192E

ECM Terminals and Reference Value

ABS007I6

PREPARATION

1. ECM is located behind the passenger side instrument lower panel. For this inspection, remove passenger side instrument lower panel.
2. Remove ECM harness connector.

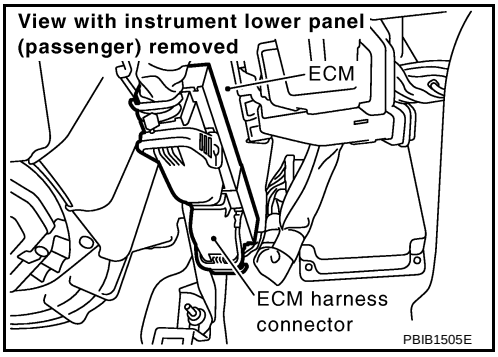

PBIB1505E

3. When disconnecting ECM harness connector, loosen it with levers as far as they will go as shown at right.
4. Connect a break-out box (SST) and Y-cable adapter (SST) between the ECM and ECM harness connector.
   - Use extreme care not to touch 2 pins at one time.
   - Data is for comparison and may not be exact.

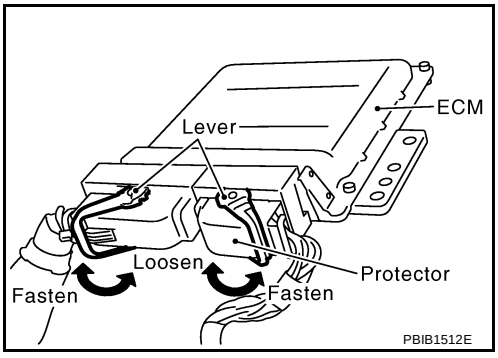

PBIB1512E

ECM INSPECTION TABLE

Specification data are reference values and are measured between each terminal and ground.
Pulse signal is measured by CONSULT-II.

CAUTION:

Do not use ECM ground terminals when measuring input/output voltage. Doing so may result in damage to the ECMs transistor. Use a ground other than ECM terminals, such as the ground.

TERMINAL NO.	WIRE COLOR	ITEM	CONDITION	DATA (DC Voltage)
1	B	ECM ground	**[Engine is running]** ● Idle speed	Body ground

TER-MINAL NO.	WIRE COLOR	ITEM	CONDITION	DATA (DC Voltage)
2	L	Heated oxygen sensor 1 heater (bank 1)	**[Engine is running]** ● **Warm-up condition** ● Engine speed: Below 3,000 rpm	Approximately 7V★ 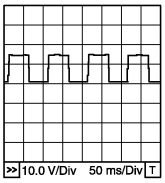 PBIB0519E
			[Engine is running] ● Engine speed: Above 3,000 rpm	BATTERY VOLTAGE (11 - 14V)
3	P	Throttle control motor relay power supply	**[Ignition switch: ON]**	BATTERY VOLTAGE (11 - 14V)
4	L/W	Throttle control motor (Close)	**[Ignition switch: ON]** ● Engine stopped ● Selector lever: D ● Accelerator pedal: Released	0 - 14V★ 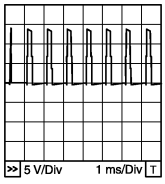 PBIB1104E
5	L/B	Throttle control motor (Open)	**[Ignition switch: ON]** ● Engine stopped ● Selector lever: D ● Accelerator pedal: Fully depressed	0 - 14V★ 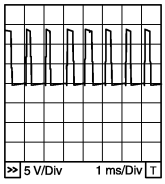 PBIB1105E
6	R	Heated oxygen sensor 2 heater (bank 1)	**[Engine is running]** ● Engine speed: Below 3,600 rpm after the following conditions are met – Engine: after warming up – Keeping the engine speed between 3,500 and 4,000 rpm for 1 minute and at idle for 1 minute under no load	0 - 1.0V
			[Ignition switch: ON] ● Engine stopped **[Engine is running]** ● Engine speed: Above 3,600 rpm	BATTERY VOLTAGE (11 - 14V)
10	OR	Intake valve timing control solenoid valve (bank 1)	**[Engine is running]** ● **Warm-up condition** ● Idle speed	BATTERY VOLTAGE (11 - 14V)
			[Engine is running] ● **Warm-up condition** ● Engine speed: 2,000rpm	7 - 12V★ 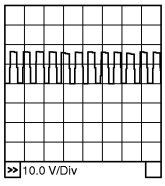 PBIB1790E

TER-MINAL NO.	WIRE COLOR	ITEM	CONDITION	DATA (DC Voltage)
11	BR	Intake valve timing control solenoid valve (bank 2)	**[Engine is running]** ● **Warm-up condition** ● Idle speed	BATTERY VOLTAGE (11 - 14V)
			[Engine is running] ● **Warm-up condition** ● Engine speed: 2,000rpm	7 - 12V★ 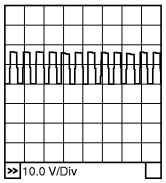 PBIB1790E
12	R/G	Power steering pressure sensor	**[Engine is running]** ● Steering wheel: Being turned	0.5 - 4.5V
			[Engine is running] ● Steering wheel: Not being turned	0.4 - 0.8V
13	Y	Crankshaft position sensor (POS)	**[Engine is running]** ● **Warm-up condition** ● Idle speed **NOTE:** The pulse cycle changes depending on rpm at idle	1.0 - 2.0V★ 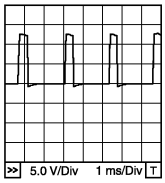 PBIB1041E
			[Engine is running] ● Engine speed: 2,000 rpm	1.0 - 2.0V★ 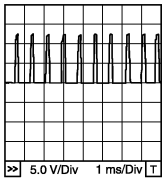 PBIB1042E
14	W	Camshaft position sensor (PHASE)	**[Engine is running]** ● **Warm-up condition** ● Idle speed **NOTE:** The pulse cycle changes depending on rpm at idle	1.0 - 4.0V★ 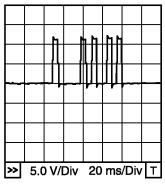 PBIB1039E
			[Engine is running] ● Engine speed: 2,000 rpm	1.0 - 4.0V★ 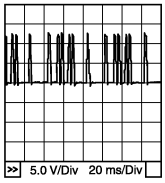 PBIB1040E
15	W	Knock sensor (bank 1)	**[Engine is running]** ● Idle speed	Approximately 2.5V
16	R/L	Heated oxygen sensor 1 (bank 1)	**[Engine is running]** ● **Warm-up condition** ● Engine speed: 2,000 rpm	0 - Approximately 1.0V (Periodically change)

TER-MINAL NO.	WIRE COLOR	ITEM	CONDITION	DATA (DC Voltage)
21 22 23 40 41 42 44 63	W R P PU BR B OR G	Injector No. 5 Injector No. 3 Injector No. 1 Injector No. 6 Injector No. 4 Injector No. 2 Injector No. 7 Injector No. 8	**[Engine is running]** ● **Warm-up condition** ● Idle speed **NOTE:** The pulse cycle changes depending on rpm at idle	BATTERY VOLTAGE (11 - 14V)★ 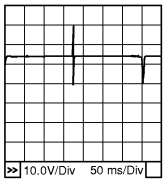 PBIB0042E
			[Engine is running] ● **Warm-up condition** ● Engine speed: 2,000 rpm	BATTERY VOLTAGE (11 - 14V)★ 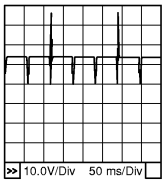 PBIB0043E
24	BR	Heated oxygen sensor 1 heater (bank 2)	**[Engine is running]** ● **Warm-up condition** ● Engine speed: Below 3,000 rpm	Approximately 7V★ 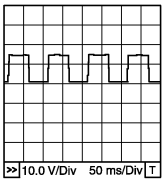 PBIB0519E
			[Engine is running] ● Engine speed: Above 3,000 rpm	BATTERY VOLTAGE (11 - 14V)
25	P	Heated oxygen sensor 2 heater (bank 2)	**[Engine is running]** ● Engine speed: Below 3,600 rpm after the following conditions are met – Engine: after warming up – Keeping the engine speed between 3,500 and 4,000 rpm for 1 minute and at idle for 1 minute under no load	0 - 1.0V
			[Ignition switch: ON] ● Engine stopped **[Engine is running]** ● Engine speed: Above 3,600 rpm	BATTERY VOLTAGE (11 - 14V)
29	GY	VIAS control solenoid valve	**[Engine is running]** ● Selector lever: P or N	0 - 1.0V
			[Engine is running] ● Selector lever: D	BATTERY VOLTAGE (11 - 14V)
			[Engine is running] ● Engine speed: Above 5,000 rpm	0 - 1.0V
32	OR	EVAP control system pressure sensor	**[Ignition switch: ON]**	Approximately 1.8 - 4.8V
34	Y	Intake air temperature sensor	**[Engine is running]**	Approximately 0 - 4.8V Output voltage varies with intake air temperature.

TER-MINAL NO.	WIRE COLOR	ITEM	CONDITION	DATA (DC Voltage)
35	BR	Heated oxygen sensor 1 (bank 2)	**[Engine is running]** ● **Warm-up condition** ● Engine speed:2,000 rpm	0 - Approximately 1.0V (Periodically change)
36	W	Knock sensor (bank 2)	**[Engine is running]** ● Idle speed	Approximately 2.5V
45	W	EVAP canister purge volume control solenoid valve	**[Engine is running]** ● Idle speed	BATTERY VOLTAGE (11 - 14V)★ 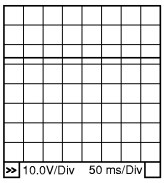 PBIB0050E
			[Engine is running] ● Engine speed: About 2,000 rpm (More than 100 seconds after starting engine)	11 - 14V★ 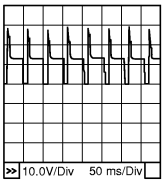 PBIB0051E
46 60 61 62 65 79 80 81	L SB L Y Y LG GY G	Ignition signal No. 7 Ignition signal No. 5 Ignition signal No. 3 Ignition signal No. 1 Ignition signal No. 8 Ignition signal No. 6 Ignition signal No. 4 Ignition signal No. 2	**[Engine is running]** ● **Warm-up condition** ● Idle speed **NOTE:** The pulse cycle changes depending on rpm at idle	0 - 0.2V★ 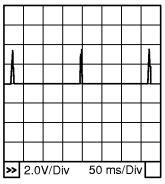 PBIB0044E
			[Engine is running] ● **Warm-up condition** ● Engine speed: 2,000 rpm	0.1 - 0.4V★ 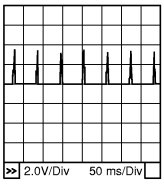 PBIB0045E
47	L	Sensor power supply (Throttle position sensor)	**[Ignition switch: ON]**	Approximately 5V
48	L	Sensor power supply (EVAP control system pressure sensor)	**[Ignition switch: ON]**	Approximately 5V
49	PU	Sensor power supply (Refrigerant pressure sensor)	**[Ignition switch: ON]**	Approximately 5V

TER-MINAL NO.	WIRE COLOR	ITEM	CONDITION	DATA (DC Voltage)
50	W	Throttle position sensor 1	**[Ignition switch: ON]** ● Engine stopped ● Selector lever: D ● Accelerator pedal: Fully released	More than 0.36V
			[Ignition switch: ON] ● Engine stopped ● Selector lever: D ● Accelerator pedal: Fully depressed	Less than 4.75V
51	L/W	Mass air flow sensor	**[Engine is running]** ● **Warm-up condition** ● Idle speed	1.0 - 1.3V
			[Engine is running] ● **Warm-up condition** ● Engine speed: 2,500 rpm	1.6 - 2.0V
53	R/L	Intake valve timing control position sensor (bank 2)	**[Engine is running]** ● **Warm-up condition** ● Idle speed	0 - 1.0V
			[Engine is running] ● Engine speed: 2,000 rpm	0 - 1.0V★ 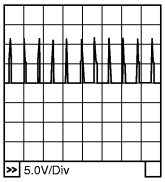 PBIB2046E
55	W/R	Heated oxygen sensor 2 (bank 1)	**[Engine is running]** ● **Warm-up condition** ● Revving engine from idle to 3,000 rpm quickly after the following conditions are met – After keeping the engine speed between 3,500 and 4,000 rpm for 1 minute and at idle for 1 minute under no load	0 - Approximately 1.0V
66	B	Sensor ground (Throttle position sensor)	**[Engine is running]** ● **Warm-up condition** ● Idle speed	Approximately 0V
67	B/W	Sensor ground	**[Engine is running]** ● **Warm-up condition** ● Idle speed	Approximately 0V
68	SB	Sensor power supply (Power steering pressure sensor)	**[Ignition switch: ON]**	Approximately 5V
69	R	Throttle position sensor 2	**[Ignition switch: ON]** ● Engine stopped ● Selector lever: D ● Accelerator pedal: Fully released	Less than 4.75V
			[Ignition switch: ON] ● Engine stopped ● Selector lever: D ● Accelerator pedal: Fully depressed	More than 0.36V

TER-MINAL NO.	WIRE COLOR	ITEM	CONDITION	DATA (DC Voltage)
70	L/R	Refrigerant pressure sensor	**[Engine is running]** ● **Warm-up condition** ● Both A/C switch and blower fan motor switch: ON (Compressor operates)	1.0 - 4.0V
72	BR	Intake valve timing control position sensor (bank 1)	**[Engine is running]** ● **Warm-up condition** ● Idle speed	0 - 1.0V
			[Engine is running] ● Engine speed: 2,000rpm	0 - 1.0V★ 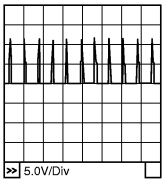 PBIB2046E
73	OR	Engine coolant temperature sensor	**[Engine is running]**	Approximately 0 - 4.8V Output voltage varies with engine coolant temperature.
74	LG/B	Heated oxygen sensor 2 (bank 2)	**[Engine is running]** ● **Warm-up condition** ● Revving engine from idle to 3,000 rpm quickly after the following conditions are met – After keeping the engine speed between 3,500 and 4,000 rpm for 1 minute and at idle for 1 minute under no load	0 - Approximately 1.0V
78	B/R	Sensor ground (Heated oxygen sensor)	**[Engine is running]** ● **Warm-up condition** ● Idle speed	Approximately 0V
82	B/W	Sensor ground (APP sensor 1 / ICC steering switch / ASCD steering switch)	**[Engine is running]** ● **Warm-up condition** ● Idle speed	Approximately 0V
83	G/OR	Sensor ground (APP sensor 2)	**[Engine is running]** ● **Warm-up condition** ● Idle speed	Approximately 0V
85	PU	Data link connector	**[Ignition switch: ON]** ● CONSULT-II or GST: Disconnected	Approximately 5V - Battery voltage (11 - 14V)
86	R	CAN communication line	**[Ignition switch: ON]**	Approximately 1.1 - 2.3V Output voltage varies with the communication status.
90	L/B	Sensor power supply (APP sensor 1)	**[Ignition switch: ON]**	Approximately 5V
91	G	Sensor power supply (APP sensor 2)	**[Ignition switch: ON]**	Approximately 5V
94	L	CAN communication line	**[Ignition switch: ON]**	Approximately 2.6 - 3.2V Output voltage varies with the communication status.

TER-MINAL NO.	WIRE COLOR	ITEM	CONDITION	DATA (DC Voltage)
98	B/P	Accelerator pedal position sensor 2	**[Ignition switch: ON]** ● Engine stopped ● Accelerator pedal: Fully released	0.15 - 0.60V
			[Ignition switch: ON] ● Engine stopped ● Accelerator pedal: Fully depressed	1.95 - 2.40V
99	G/Y	ICC steering switch (models with ICC system)	**[Ignition switch: ON]** ● ICC steering switch: OFF	Approximately 4.3V
			[Ignition switch: ON] ● MAIN switch: Pressed	Approximately 0V
			[Ignition switch: ON] ● CANCEL switch: Pressed	Approximately 1.3V
			[Ignition switch: ON] ● RESUME/ACCELERATE switch: Pressed	Approximately 3.7V
			[Ignition switch: ON] ● SET/COAST switch: Pressed	Approximately 3V
			[Ignition switch: ON] ● DISTANCE switch: Pressed	Approximately 2.2V
99	G/Y	ASCD steering switch (models with ASCD system)	**[Ignition switch: ON]** ● ASCD steering switch: OFF	Approximately 4V
			[Ignition switch: ON] ● MAIN switch: Pressed	Approximately 0V
			[Ignition switch: ON] ● CANCEL switch: Pressed	Approximately 1V
			[Ignition switch: ON] ● RESUME/ACCELERATE switch: Pressed	Approximately 3V
			[Ignition switch: ON] ● SET/COAST switch: Pressed	Approximately 2V
101	P/L	Stop lamp switch	**[Ignition switch: OFF]** ● Brake pedal: Fully released	Approximately 0V
			[Ignition switch: OFF] ● Brake pedal: Slightly depressed	BATTERY VOLTAGE (11 - 14V)
102	LG/B	PNP switch	**[Ignition switch: ON]** ● Selector lever: P or N	Approximately 0V
			[Ignition switch: ON] ● Selector lever: Except above	BATTERY VOLTAGE (11 - 14V)
104	L/OR	Throttle control motor relay	**[Ignition switch: OFF]**	BATTERY VOLTAGE (11 - 14V)
			[Ignition switch: ON]	0 - 1.0V
106	R/B	Accelerator pedal position sensor 1	**[Ignition switch: ON]** ● Engine stopped ● Accelerator pedal: Fully released	0.5 - 1.0V
			[Ignition switch: ON] ● Engine stopped ● Accelerator pedal: Fully depressed	3.9 - 4.7V

TER-MINAL NO.	WIRE COLOR	ITEM	CONDITION	DATA (DC Voltage)
107	PU/W	Fuel tank temperature sensor	**[Engine is running]**	Approximately 0 - 4.8V Output voltage varies with fuel tank temperature.
108	SB	ICC brake switch (models witch ICC system) ASCD brake switch (models witch ASCD system)	**[Ignition switch: ON]** ● Brake pedal: Slightly depressed	Approximately 0V
			[Ignition switch: ON] ● Brake pedal: Fully released	BATTERY VOLTAGE (11 - 14V)
109	W/L	Ignition switch	**[Ignition switch: OFF]**	0V
			[Ignition switch: ON]	BATTERY VOLTAGE (11 - 14V)
111	W/B	ECM relay (Self shut-off)	**[Engine is running]** **[Ignition switch: OFF]** ● For a few seconds after turning ignition switch OFF	0 - 1.5V
			[Ignition switch: OFF] ● More than a few seconds after turning ignition switch OFF	BATTERY VOLTAGE (11 - 14V)
113	GY/R	Fuel pump relay	**[Ignition switch: ON]** ● For 1 second after turning ignition switch ON **[Engine is running]**	0 - 1.5V
			[Ignition switch: ON] ● More than 1 second after turning ignition switch ON	BATTERY VOLTAGE (11 - 14V)
115 116	B/R B/W	ECM ground	**[Engine is running]** ● Idle speed	Body ground
117	R/Y	EVAP canister vent control valve	**[Ignition switch: ON]**	BATTERY VOLTAGE (11 - 14V)
119 120	R R	Power supply for ECM	**[Ignition switch: ON]**	BATTERY VOLTAGE (11 - 14V)
121	R/W	Power supply for ECM (Back-up)	**[Ignition switch: OFF]**	BATTERY VOLTAGE (11 - 14V)

★: Average voltage for pulse signal (Actual pulse signal can be confirmed by oscilloscope.)

CONSULT-II Function (ENGINE)

ABS007I7

FUNCTION

Diagnostic test mode	Function
Work support	This mode enables a technician to adjust some devices faster and more accurately by following the indications on the CONSULT-II unit.
Self-diagnostic results	Self-diagnostic results such as 1st trip DTC, DTCs and 1st trip freeze frame data or freeze frame data can be read and erased quickly.*
Data monitor	Input/Output data in the ECM can be read.
Data monitor (SPEC)	Input/Output of the specification for Basic fuel schedule, AFM, A/F feedback control value and the other data monitor items can be read.
CAN diagnostic support monitor	The results of transmit/receive diagnosis of CAN communication can be read.
Active test	Diagnostic Test Mode in which CONSULT-II drives some actuators apart from the ECMs and also shifts some parameters in a specified range.
DTC & SRT confirmation	The status of system monitoring tests and the self-diagnosis status/result can be confirmed.
Function test	This mode is used to inform customers when their vehicle condition requires periodic maintenance.
ECM part number	ECM part number can be read.

*: The following emission-related diagnostic information is cleared when the ECM memory is erased.

- Diagnostic trouble codes
- 1st trip diagnostic trouble codes
- Freeze frame data
- 1st trip freeze frame data
- System readiness test (SRT) codes
- Test values

ENGINE CONTROL COMPONENT PARTS/CONTROL SYSTEMS APPLICATION

		Item	DIAGNOSTIC TEST MODE							
			WORK SUPPORT	SELF-DIAGNOSTIC RESULTS		DATA MONITOR	DATA MONITOR (SPEC)	ACTIVE TEST	DTC & SRT CONFIRMATION	
				DTC*1	FREEZE FRAME DATA*2				SRT STATUS	DTC WORK SUPPORT
ENGINE CONTROL COMPONENT PARTS	INPUT	Crankshaft position sensor (POS)		×	×	×	×			
		Camshaft position sensor (PHASE)		×	×	×	×			
		Mass air flow sensor		×		×	×			
		Engine coolant temperature sensor		×	×	×	×	×		
		Heated oxygen sensor 1		×		×	×		×	×
		Heated oxygen sensor 2		×		×	×		×	×
		Wheel sensor		×	×	×	×			
		Accelerator pedal position sensor		×		×	×			
		Throttle position sensor		×		×	×			
		Fuel tank temperature sensor		×		×	×	×		
		EVAP control system pressure sensor		×		×	×			
		Intake air temperature sensor		×	×	×	×			
		Knock sensor		×						
		Refrigerant pressure sensor				×	×			
		Closed throttle position switch (accelerator pedal position sensor signal)				×	×			
		Air conditioner switch				×	×			
		Park/neutral position (PNP) switch		×		×	×			
		Stop lamp switch		×		×	×			
		Power steering pressure sensor		×		×	×			
		Battery voltage				×	×			
		Load signal				×	×			
		Snow mode switch				×	×			
		Intake valve timing control position sensor		×		×	×			
		Fuel level sensor		×		×	×			
		ICC steering switch		×		×	×			
		ASCD steering switch		×		×	×			
		ICC brake switch		×		×	×			
		ASCD brake switch		×		×	×			

Item			DIAGNOSTIC TEST MODE							
			WORK SUP-PORT	SELF-DIAGNOS-TIC RESULTS		DATA MONI-TOR	DATA MONI-TOR (SPEC)	ACTIVE TEST	DTC & SRT CONFIRMATION	
				DTC*1	FREEZE FRAME DATA*2				SRT STATUS	DTC WORK SUP-PORT
ENGINE CONTROL COMPONENT PARTS	OUTPUT	Fuel injector				×	×	×		
		Power transistor (Ignition timing)				×	×	×		
		Throttle control motor relay		×		×	×			
		Throttle control motor		×						
		EVAP canister purge volume control solenoid valve		×		×	×	×		×
		Air conditioner relay				×	×			
		Fuel pump relay	×			×	×	×		
		Cooling fan relay		×		×	×	×		
		Heated oxygen sensor 1 heater		×		×	×		×	
		Heated oxygen sensor 2 heater		×		×	×		×	
		EVAP canister vent control valve	×	×		×	×	×		
		Intake valve timing control solenoid valve		×		×	×	×		
		VIAS control solenoid valve		×		×	×	×		
		Calculated load value			×	×	×			

X: Applicable
*1: This item includes 1st trip DTCs.
*2: This mode includes 1st trip freeze frame data or freeze frame data. The items appear on CONSULT-II screen in freeze frame data mode only if a 1st trip DTC or DTC is detected. For details, refer to EC-751 .

INSPECTION PROCEDURE

CAUTION:

If CONSULT-II is used with no connection of CONSULT-II CONVERTER, malfunctions might be detected in self-diagnosis depending on control unit which carry out CAN communication.

1. Turn ignition switch OFF.
2. Connect CONSULT-II and CONSULT-II CONVERTER to data link connector, which is located under LH dash panel near the hood opener handle.
3. Turn ignition switch ON.

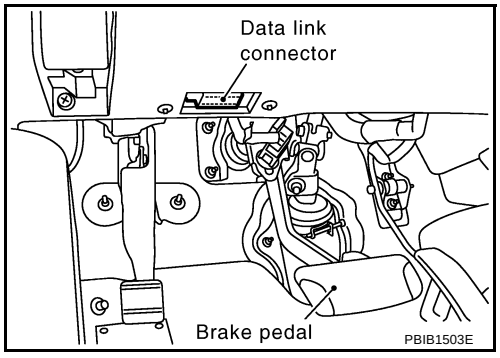

4. Touch “START (NISSAN BASED VHCL)”.

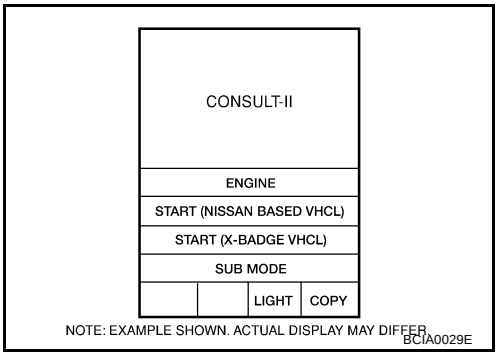

5. Touch “ENGINE”.
If “ENGINE” is not indicated, go to GI-39, "CONSULT-II Data Link Connector (DLC) Circuit" .

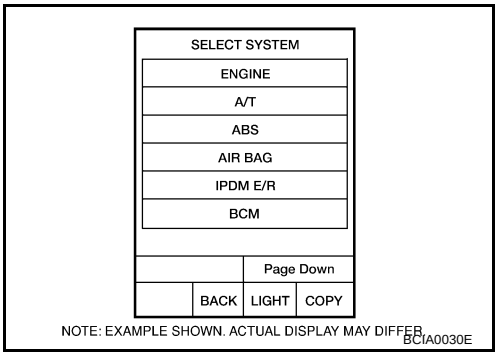

6. Perform each diagnostic test mode according to each service procedure.

For further information, see the CONSULT-II Operation Manual.

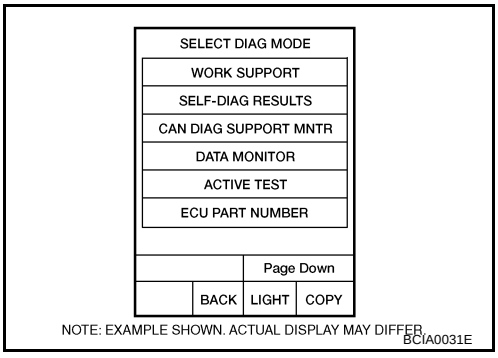

WORK SUPPORT MODE

Work Item

WORK ITEM	CONDITION	USAGE
FUEL PRESSURE RELEASE	● FUEL PUMP WILL STOP BY TOUCHING “START” DURING IDLING. CRANK A FEW TIMES AFTER ENGINE STALLS.	When releasing fuel pressure from fuel line
IDLE AIR VOL LEARN	● THE IDLE AIR VOLUME THAT KEEPS THE ENGINE WITHIN THE SPECIFIED RANGE IS MEMORIZED IN ECM.	When learning the idle air volume
SELF-LEARNING CONT	● THE COEFFICIENT OF SELF-LEARNING CONTROL MIXTURE RATIO RETURNS TO THE ORIGINAL COEFFICIENT.	When clearing the coefficient of self-learning control value

WORK ITEM	CONDITION	USAGE
EVAP SYSTEM CLOSE	CLOSE THE EVAP CANISTER VENT CONTROL VALVE IN ORDER TO MAKE EVAP SYSTEM CLOSE UNDER THE FOLLOWING CONDITIONS. ● IGN SW ON ● ENGINE NOT RUNNING ● AMBIENT TEMPERATURE IS ABOVE 0°C (32°F). ● NO VACUUM AND NO HIGH PRESSURE IN EVAP SYSTEM ● FUEL TANK TEMP. IS MORE THAN 0°C (32°F). ● WITHIN 10 MINUTES AFTER STARTING “EVAP SYSTEM CLOSE” ● WHEN TRYING TO EXECUTE “EVAP SYSTEM CLOSE” UNDER THE CONDITION EXCEPT ABOVE, CONSULT-II WILL DISCONTINUE IT AND DISPLAY APPROPRIATE INSTRUCTION. **NOTE:** **WHEN STARTING ENGINE, CONSULT-II MAY DISPLAY “BATTERY VOLTAGE IS LOW. CHARGE BATTERY”, EVEN IN USING CHARGED BATTERY.**	When detecting EVAP vapor leak point of EVAP system
VIN REGISTRATION	● IN THIS MODE VIN IS REGISTERED IN ECM	When registering VIN in ECM
TARGET IDLE RPM ADJ*	● IDLE CONDITION	When setting target idle speed
TARGET IGN TIM ADJ*	● IDLE CONDITION	When adjusting target ignition timing

*: This function is not necessary in the usual service procedure.

SELF-DIAG RESULTS MODE

Self Diagnostic Item

Regarding items of DTC and 1st trip DTC, refer to EC-707, "INDEX FOR DTC" .)

Freeze Frame Data and 1st Trip Freeze Frame Data

Freeze frame data item*	Description
DIAG TROUBLE CODE [PXXXX]	● The engine control component part/control system has a trouble code, it is displayed as PXXXX. (Refer to EC-707, "INDEX FOR DTC" .)
FUEL SYS-B1	● “Fuel injection system status” at the moment a malfunction is detected is displayed.
FUEL SYS-B2	● One mode in the following is displayed. Mode2: Open loop due to detected system malfunction Mode3: Open loop due to driving conditions (power enrichment, deceleration enleanment) Mode4: Closed loop - using oxygen sensor(s) as feedback for fuel control Mode5: Open loop - has not yet satisfied condition to go to closed loop
CAL/LD VALUE [%]	● The calculated load value at the moment a malfunction is detected is displayed.
COOLANT TEMP [°C] or [°F]	● The engine coolant temperature at the moment a malfunction is detected is displayed.
L-FUEL TRM-B1 [%]	● “Long-term fuel trim” at the moment a malfunction is detected is displayed.
L-FUEL TRM-B2 [%]	● The long-term fuel trim indicates much more gradual feedback compensation to the base fuel schedule than short-term fuel trim.
S-FUEL TRM-B1 [%]	● “Short-term fuel trim” at the moment a malfunction is detected is displayed.
S-FUEL TRM-B2 [%]	● The short-term fuel trim indicates dynamic or instantaneous feedback compensation to the base fuel schedule.
ENGINE SPEED [rpm]	● The engine speed at the moment a malfunction is detected is displayed.
VEHICL SPEED [km/h] or [mph]	● The vehicle speed at the moment a malfunction is detected is displayed.

Freeze frame data item*	Description
B/FUEL SCHDL [msec]	● The base fuel schedule at the moment a malfunction is detected is displayed.
INT/A TEMP SE [°C] or [°F]	● The intake air temperature at the moment a malfunction is detected is displayed.

*: The items are the same as those of 1st trip freeze frame data.

DATA MONITOR MODE

Monitored Item

×: Applicable

Monitored item [Unit]	ECM INPUT SIG-NALS	MAIN SIG-NALS	Description	Remarks
ENG SPEED [rpm]	×	×	● Indicates the engine speed computed from the signal of the crankshaft position sensor (POS) and camshaft position sensor (PHASE).	● Accuracy becomes poor if engine speed drops below the idle rpm. ● If the signal is interrupted while the engine is running, an abnormal value may be indicated.
MAS A/F SE-B1 [V]	×	×	● The signal voltage of the mass air flow sensor is displayed.	● When the engine is stopped, a certain value is indicated.
B/FUEL SCHDL [msec]		×	● "Base fuel schedule" indicates the fuel injection pulse width programmed into ECM, prior to any learned on board correction.	
A/F ALPHA-B1 [%]		×	● The mean value of the air-fuel ratio feedback correction factor per cycle is indicated.	● When the engine is stopped, a certain value is indicated. ● This data also includes the data for the air-fuel ratio learning control.
A/F ALPHA-B2 [%]		×		
COOLAN TEMP/S [°C] or [°F]	×	×	● The engine coolant temperature (determined by the signal voltage of the engine coolant temperature sensor) is displayed.	● When the engine coolant temperature sensor is open or short-circuited, ECM enters fail-safe mode. The engine coolant temperature determined by the ECM is displayed.
HO2S1 (B1) [V]	×	×	● The signal voltage of the heated oxygen sensor 1 is displayed.	
HO2S1 (B2) [V]	×			
HO2S2 (B1) [V]	×		● The signal voltage of the heated oxygen sensor 2 is displayed.	
HO2S2 (B2) [V]	×			
HO2S1 MNTR (B1) [RICH/LEAN]	×	×	● Display of heated oxygen sensor 1 signal during air-fuel ratio feedback control: RICH: means the mixture became "rich", and control is being affected toward a leaner mixture. LEAN: means the mixture became "lean", and control is being affected toward a rich mixture.	● After turning ON the ignition switch, "RICH" is displayed until air-fuel mixture ratio feedback control begins. ● When the air-fuel ratio feedback is clamped, the value just before the clamping is displayed continuously.
HO2S1 MNTR (B2) [RICH/LEAN]	×			
HO2S2 MNTR (B1) [RICH/LEAN]	×		● Display of heated oxygen sensor 2 signal: RICH: means the amount of oxygen after three way catalyst is relatively small. LEAN: means the amount of oxygen after three way catalyst is relatively large.	● When the engine is stopped, a certain value is indicated.
HO2S2 MNTR (B2) [RICH/LEAN]	×			
VHCL SPEED SE [km/h] or [mph]	×	×	● The vehicle speed computed from the vehicle speed signal sent from combination meter is displayed.	

Monitored item [Unit]	ECM INPUT SIG-NALS	MAIN SIG-NALS	Description	Remarks
BATTERY VOLT [V]	×	×	● The power supply voltage of ECM is displayed.	
ACCEL SEN 1 [V]	×	×	● The accelerator pedal position sensor signal voltage is displayed.	● ACCEL SENS2 signal is converted be ECM internally. Thus, they differs from ECM terminal voltage signal.
ACCEL SEN 2 [V]	×			
THRTL SEN 1 [V]	×	×	● The throttle position sensor signal voltage is displayed.	● THRTL SEN 2 signal is converted by ECM internally. Thus, they differs from ECM terminal voltage signal.
THRTL SEN 2 [V]	×			
FUEL T/TMP SE [°C] or [°F]	×		● The fuel temperature (determined by the signal voltage of the fuel tank temperature sensor) is displayed.	
INT/A TEMP SE [°C] or [°F]	×	×	● The intake air temperature (determined by the signal voltage of the intake air temperature sensor) is indicated.	
EVAP SYS PRES [V]	×		● The signal voltage of EVAP control system pressure sensor is displayed.	
FUEL LEVEL SE [V]	×		● The signal voltage of the fuel level sensor is displayed.	
START SIGNAL [ON/OFF]	×	×	● Indicates start signal status [ON/OFF] computed by the ECM according to the signals of engine speed and battery voltage.	● After starting the engine, [OFF] is displayed regardless of the starter signal.
CLSD THL POS [ON/OFF]	×	×	● Indicates idle position [ON/OFF] computed by ECM according to the accelerator pedal position sensor signal.	
AIR COND SIG [ON/OFF]	×	×	● Indicates [ON/OFF] condition of the air conditioner switch as determined by the air conditioner signal.	
P/N POSI SW [ON/OFF]	×	×	● Indicates [ON/OFF] condition from the park/neutral position (PNP) switch signal.	
PW/ST SIGNAL [ON/OFF]	×	×	● [ON/OFF] condition of the power steering system (determined by the signal voltage of the power steering pressure sensor signal) is indicated.	
LOAD SIGNAL [ON/OFF]	×	×	● Indicates [ON/OFF] condition from the electrical load signal. ON: Rear window defogger switch is ON and/or lighting switch is in 2nd position. OFF: Both rear window defogger switch and lighting switch are OFF.	
IGNITION SW [ON/OFF]	×		● Indicates [ON/OFF] condition from ignition switch signal.	
HEATER FAN SW [ON/OFF]	×		● Indicates [ON/OFF] condition from the heater fan switch signal.	
BRAKE SW [ON/OFF]			● Indicates [ON/OFF] condition from the stop lamp switch signal.	
INJ PULSE-B1 [msec]		×	● Indicates the actual fuel injection pulse width compensated by ECM according to the input signals.	● When the engine is stopped, a certain computed value is indicated.
INJ PULSE-B2 [msec]				
IGN TIMING [BTDC]		×	● Indicates the ignition timing computed by ECM according to the input signals.	● When the engine is stopped, a certain value is indicated.

Monitored item [Unit]	ECM INPUT SIG-NALS	MAIN SIG-NALS	Description	Remarks
CAL/LD VALUE [%]			● “Calculated load value” indicates the value of the current air flow divided by peak air flow.	
MASS AIRFLOW [g·m/s]			● Indicates the mass air flow computed by ECM according to the signal voltage of the mass air flow sensor.	
PURG VOL C/V [%]			● Indicates the EVAP canister purge volume control solenoid valve control value computed by the ECM according to the input signals. ● The opening becomes larger as the value increases.	
INT/V TIM (B1) [°CA]			● Indicates [°CA] of intake camshaft advanced angle.	
INT/V TIM (B2) [°CA]				
INT/V SOL (B1) [%]			● The control value of the intake valve timing control solenoid valve (determined by ECM according to the input signals) is indicated. ● The advance angle becomes larger as the value increases.	
INT/V SOL (B2) [%]				
VIAS S/V [ON/OFF]			● The control condition of the VIAS control solenoid valve (determined by ECM according to the input signals) is indicated. ● OFF: VIAS control solenoid valve is not operating. ON: VIAS control solenoid valve is operating.	
AIR COND RLY [ON/OFF]		×	● The air conditioner relay control condition (determined by ECM according to the input signals) is indicated.	
FUEL PUMP RLY [ON/OFF]		×	● Indicates the fuel pump relay control condition determined by ECM according to the input signals.	
VENT CONT/V [ON/OFF]			● The control condition of the EVAP canister vent control valve (determined by ECM according to the input signals) is indicated. ON: Closed OFF: Open	
THRTL RELAY [ON/OFF]			● Indicates the throttle control motor relay control condition determined by the ECM according to the input signals.	
COOLING FAN [HI/MID/OFF]			● The control condition of the cooling fan (determined by ECM according to the input signals) is indicated. HI: High speed operation MID: Middle speed operation OFF: Stop	

Monitored item [Unit]	ECM INPUT SIG-NALS	MAIN SIG-NALS	Description	Remarks
HO2S1 HTR (B1) [ON/OFF]			● Indicates [ON/OFF] condition of heated oxygen sensor 1 heater determined by ECM according to the input signals.	
HO2S1 HTR (B2) [ON/OFF]				
HO2S2 HTR (B1) [ON/OFF]			● Indicates [ON/OFF] condition of heated oxygen sensor 2 heater determined by ECM according to the input signals.	
HO2S2 HTR (B2) [ON/OFF]				
I/P PULLY SPD [rpm]			● Indicates the engine speed computed from the turbine revolution sensor signal.	
VEHICLE SPEED [km/h] or [MPH]			● The vehicle speed computed from the vehicle speed signal sent from TCM is displayed.	
IDL A/V LEARN [YET/CMPLT]			● Display the condition of idle air volume learning YET: Idle air volume learning has not been performed yet. CMPLT: Idle air volume learning has already been performed successfully.	
TRVL AFTER MIL [km] or [mile]			● Distance traveled while MIL is activated.	
SNOW MODE SW [ON/OFF]			● Indicates [ON/OFF] condition from the snow mode switch signal.	
O2SEN HTR DTY [%]			● Indicates the heated oxygen sensor 1 heater control value computed by the ECM according to the input signals.	
AC PRESS SEN [V]			● The signal voltage from the refrigerant pressure sensor is displayed.	
VHCL SPEED SE [km/h] or [mph]			● The vehicle speed computed from the vehicle speed signal sent from combination meter is displayed.	
SET VHCL SPD [km/h] or [mph]			● The preset vehicle speed is displayed.	
MAIN SW [ON/OFF]			● Indicates [ON/OFF] condition from MAIN switch signal.	
CANCEL SW [ON/OFF]			● Indicates [ON/OFF] condition from CANCEL switch signal.	
RESUME/ACC SW [ON/OFF]			● Indicates [ON/OFF] condition from RESUME/ACCELERATE switch signal.	
SET SW [ON/OFF]			● Indicates [ON/OFF] condition from SET/COAST switch signal.	
BRAKE SW1 [ON/OFF]			● Indicates [ON/OFF] condition from ASCD brake switch signal.	
BRAKE SW2 [ON/OFF]			● Indicates [ON/OFF] condition of stop lamp switch signal.	
DIST SW [ON/OFF]			● Indicates [ON/OFF] condition from DISTANCE switch signal.	
CRUISE LAMP [ON/OFF]			● Indicates [ON/OFF] condition of CRUISE lamp determined by the ECM according to the input signals.	

Monitored item [Unit]	ECM INPUT SIG-NALS	MAIN SIG-NALS	Description	Remarks
SET LAMP [ON/OFF]			● Indicates [ON/OFF] condition of SET lamp determined by the ECM according to the input signals.	
Voltage [V]			● Voltage, frequency, duty cycle or pulse width measured by the probe.	● Only "#" is displayed if item is unable to be measured. ● Figures with "#"s are temporary ones. They are the same figures as an actual piece of data which was just previously measured.
Frequency [msec], [Hz] or [%]				
DUTY-HI				
DUTY-LOW				
PLS WIDTH-HI				
PLS WIDTH-LOW				

NOTE:
Any monitored item that does not match the vehicle being diagnosed is deleted from the display automatically.

DATA MONITOR (SPEC) MODE

Monitored Item

Monitored item [Unit]	ECM input signals	Main signals	Description	Remarks
ENG SPEED [rpm]	×	×	● Indicates the engine speed computed from the signal of the crankshaft position sensor (POS) and camshaft position sensor (PHASE).	
MAS A/F SE-B1 [V]	×	×	● The signal voltage of the mass air flow sensor specification is displayed.	● When engine is running specification range is indicated.
B/FUEL SCHDL [msec]		×	● "Base fuel schedule" indicates the fuel injection pulse width programmed into ECM, prior to any learned on board correction.	● When engine is running specification range is indicated.
A/F ALPHA-B1 [%] A/F ALPHA-B2 [%]		×	● The mean value of the air-fuel ratio feedback correction factor per cycle is indicated.	● When engine is running specification range is indicated. ● This data also includes the data for the air-fuel ratio learning control.

NOTE:
Any monitored item that does not match the vehicle being diagnosed is deleted from the display automatically.

ACTIVE TEST MODE

Test Item

TEST ITEM	CONDITION	JUDGEMENT	CHECK ITEM (REMEDY)
FUEL INJECTION	● Engine: Return to the original trouble condition ● Change the amount of fuel injection using CONSULT-II.	If trouble symptom disappears, see CHECK ITEM.	● Harness and connectors ● Fuel injector ● Heated oxygen sensor 1
IGNITION TIMING	● Engine: Return to the original trouble condition ● Timing light: Set ● Retard the ignition timing using CONSULT-II.	If trouble symptom disappears, see CHECK ITEM.	● Perform Idle Air Volume Learning.

TEST ITEM	CONDITION	JUDGEMENT	CHECK ITEM (REMEDY)
POWER BALANCE	● Engine: After warming up, idle the engine. ● A/C switch OFF ● Shift lever: N ● Cut off each injector signal one at a time using CONSULT-II.	Engine runs rough or dies.	● Harness and connectors ● Compression ● Fuel injector ● Power transistor ● Spark plug ● Ignition coil
COOLING FAN*	● Ignition switch: ON ● Turn the cooling fan “HI”, “MID” and “OFF” using CONSULT-II.	Cooling fan moves and stops.	● Harness and connectors ● Cooling fan motor ● IPDM E/R
ENG COOLANT TEMP	● Engine: Return to the original trouble condition ● Change the engine coolant temperature using CONSULT-II.	If trouble symptom disappears, see CHECK ITEM.	● Harness and connectors ● Engine coolant temperature sensor ● Fuel injector
FUEL PUMP RELAY	● Ignition switch: ON (Engine stopped) ● Turn the fuel pump relay ON and OFF using CONSULT-II and listen to operating sound.	Fuel pump relay makes the operating sound.	● Harness and connectors ● Fuel pump relay
VIAS SOL VALVE	● Ignition switch: ON ● Turn solenoid valve ON and OFF with CONSULT-II and listen to operating sound.	Solenoid valve makes an operating sound.	● Harness and connectors ● Solenoid valve
PURG VOL CONT/V	● Engine: After warming up, run engine at 1,500 rpm. ● Change the EVAP canister purge volume control solenoid valve opening percent using CONSULT-II.	Engine speed changes according to the opening percent.	● Harness and connectors ● Solenoid valve
FUEL/T TEMP SEN	● Change the fuel tank temperature using CONSULT-II.		
VENT CONTROL/V	● Ignition switch: ON (Engine stopped) ● Turn solenoid valve ON and OFF with the CONSULT-II and listen to operating sound.	Solenoid valve makes an operating sound.	● Harness and connectors ● Solenoid valve
V/T ASSIGN ANGLE	● Engine: Return to the original trouble condition ● Change intake valve timing using CONSULT-II.	If trouble symptom disappears, see CHECK ITEM.	● Harness and connectors ● Intake valve timing control solenoid valve

*: Leaving cooling fan OFF with CONSULT-II while engine is running may cause the engine to overheat.

DTC & SRT CONFIRMATION MODE

SRT STATUS Mode

For details, refer to EC-751, "SYSTEM READINESS TEST (SRT) CODE" .

SRT WORK SUPPORT Mode

This mode enables a technician to drive a vehicle to set the SRT while monitoring the SRT status.

DTC WORK SUPPORT Mode

Test mode	Test item	Condition	Reference page
EVAPORATIVE SYSTEM	PURG FLOW P0441	Refer to corresponding trouble diagnosis for DTC.	EC-1056
	EVP SML LEAK P0442/P1442*		EC-1061
	EVP V/S LEAK P0456/P1456*		EC-1108
	PURG VOL CN/V P1444		EC-1233
HO2S1	HO2S1 (B1) P0133		EC-944
	HO2S1 (B1) P0134		EC-956
	HO2S1 (B1) P1143		EC-1174
	HO2S1 (B1) P1144		EC-1180
	HO2S1 (B2) P0153		EC-944
	HO2S1 (B2) P0154		EC-956
	HO2S1 (B2) P1163		EC-1174
	HO2S1 (B2) P1164		EC-1180
HO2S2	HO2S2 (B1) P0139		EC-975
	HO2S2 (B1) P1146		EC-1187
	HO2S2 (B1) P1147		EC-1198
	HO2S2 (B2) P0159		EC-975
	HO2S2 (B2) P1166		EC-1187
	HO2S2 (B2) P1167		EC-1198

*: DTC P1442 and P1456 does not apply to S50 models but appears in DTC Work Support Mode screens.

REAL TIME DIAGNOSIS IN DATA MONITOR MODE (RECORDING VEHICLE DATA)

Description

CONSULT-II has two kinds of triggers and they can be selected by touching “SETTING” in “DATA MONITOR” mode.

1. “AUTO TRIG” (Automatic trigger):
   - The malfunction will be identified on the CONSULT-II screen in real time.
     In other words, DTC/1st trip DTC and malfunction item will be displayed if the malfunction is detected by ECM.
     At the moment a malfunction is detected by ECM, “MONITOR” in “DATA MONITOR” screen is changed to “Recording Data ... xx%” as shown at right, and the data after the malfunction detection is recorded. Then when the percentage reached 100%, “REAL-TIME DIAG” screen is displayed. If “STOP” is touched on the screen during “Recording Data ... xx%”, “REAL-TIME DIAG” screen is also displayed.
     The recording time after the malfunction detection and the recording speed can be changed by “TRIGGER POINT” and “Recording Speed”. Refer to CONSULT-II OPERATION MANUAL.
2. “MANU TRIG” (Manual trigger):
   - DTC/1st trip DTC and malfunction item will not be displayed automatically on CONSULT-II screen even though a malfunction is detected by ECM.
     DATA MONITOR can be performed continuously even though a malfunction is detected.

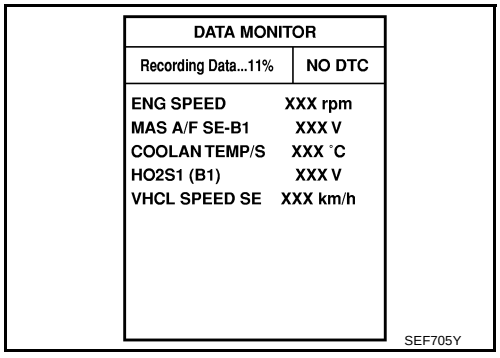

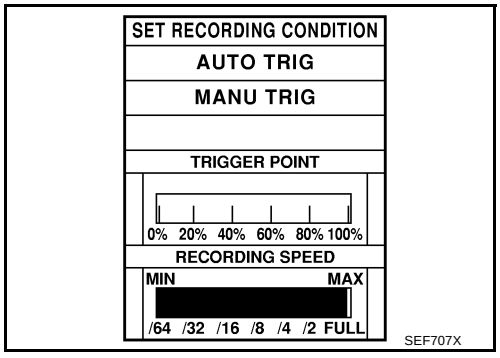

Operation

1. “AUTO TRIG”
   - While trying to detect the DTC/1st trip DTC by performing the “DTC Confirmation Procedure”, be sure to select to “DATA MONITOR (AUTO TRIG)” mode. You can confirm the malfunction at the moment it is detected.
   - While narrowing down the possible causes, CONSULT-II should be set in “DATA MONITOR (AUTO TRIG)” mode, especially in case the incident is intermittent.
     When you are inspecting the circuit by gently shaking (or twisting) the suspicious connectors, components and harness in the “DTC Confirmation Procedure”, the moment a malfunction is found the DTC/1st trip DTC will be displayed. (Refer to “INCIDENT SIMULATION TESTS” in GI-27, "How to Perform Efficient Diagnosis for an Electrical Incident" .)
2. “MANU TRIG”
   - If the malfunction is displayed as soon as “DATA MONITOR” is selected, reset CONSULT-II to “MANU TRIG”. By selecting “MANU TRIG” you can monitor and store the data. The data can be utilized for further diagnosis, such as a comparison with the value for the normal operating condition.

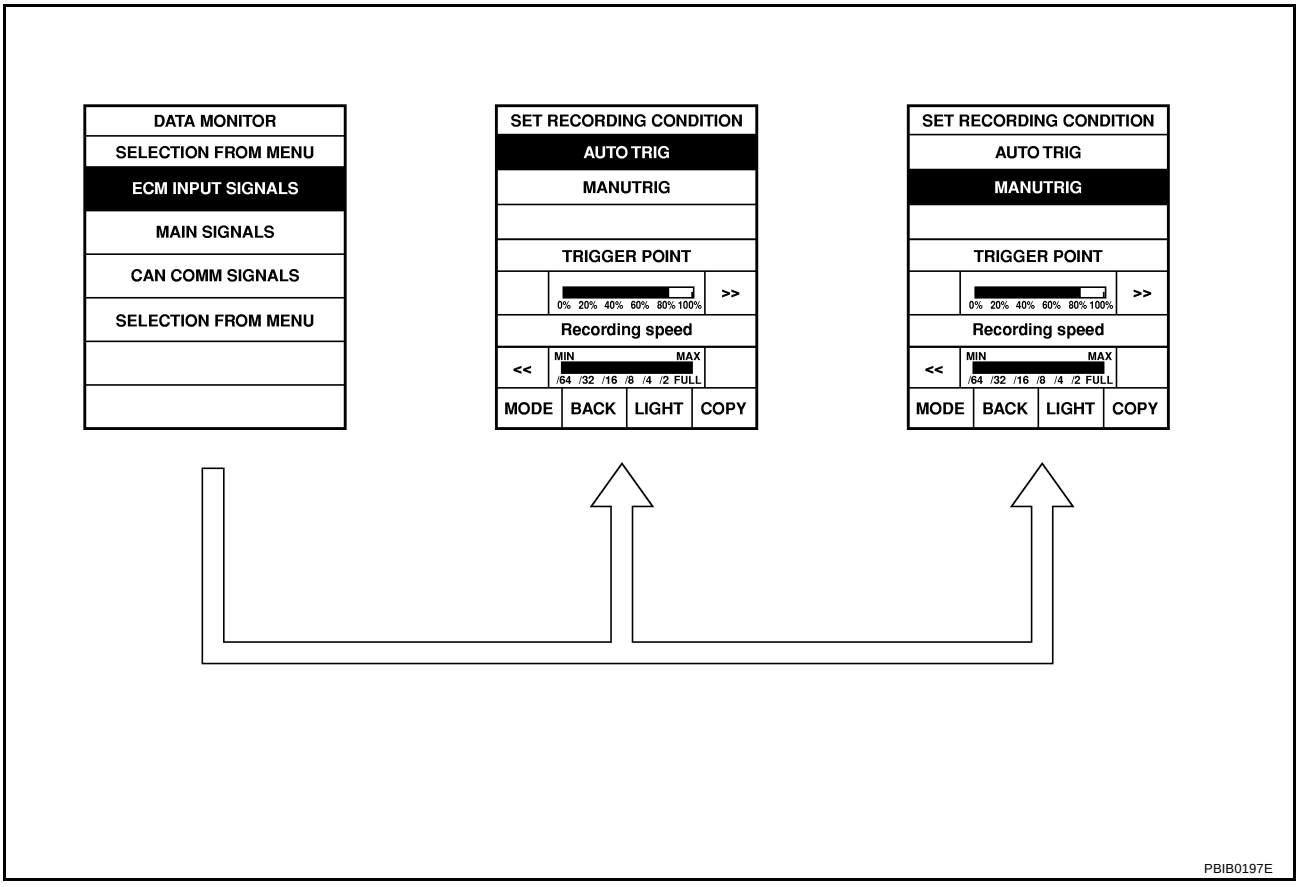

Generic Scan Tool (GST) Function

ABS007I8

DESCRIPTION

Generic Scan Tool (OBDII scan tool) complying with SAE J1978 has 8 different functions explained below.
ISO9141 is used as the protocol.
The name “GST” or “Generic Scan Tool” is used in this service manual.

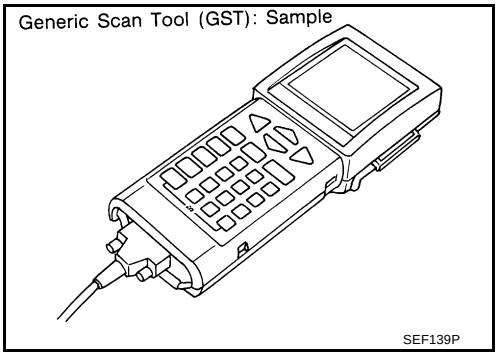

FUNCTION

Diagnostic test mode		Function
Service $01	READINESS TESTS	This mode gains access to current emission-related data values, including analog inputs and outputs, digital inputs and outputs, and system status information.
Service $02	(FREEZE DATA)	This mode gains access to emission-related data value which were stored by ECM during the freeze frame. For details, refer to EC-751, "FREEZE FRAME DATA AND 1ST TRIP FREEZE FRAME DATA" .
Service $03	DTCs	This mode gains access to emission-related power train trouble codes which were stored by ECM.
Service $04	CLEAR DIAG INFO	This mode can clear all emission-related diagnostic information. This includes: ● Clear number of diagnostic trouble codes (Service $01) ● Clear diagnostic trouble codes (Service $03) ● Clear trouble code for freeze frame data (Service $01) ● Clear freeze frame data (Service $02) ● Reset status of system monitoring test (Service $01) ● Clear on board monitoring test results (Service $06 and $07)
Service $06	(ON BOARD TESTS)	This mode accesses the results of on board diagnostic monitoring tests of specific components/systems that are not continuously monitored.
Service $07	(ON BOARD TESTS)	This mode enables the off board test drive to obtain test results for emission-related powertrain components/systems that are continuously monitored during normal driving conditions.
Service $08	—	This mode can close EVAP system in ignition switch ON position (Engine stopped). When this mode is performed, EVAP canister vent control valve can be closed. In the following conditions, this mode cannot function. ● Low ambient temperature ● Low battery voltage ● Engine running ● Ignition switch OFF ● Low fuel temperature ● Too much pressure is applied to EVAP system
Service $09	(CALIBRATION ID)	This mode enables the off-board test device to request specific vehicle information such as Vehicle Identification Number (VIN) and Calibration IDs.

INSPECTION PROCEDURE

1. Turn ignition switch OFF.
2. Connect “GST” to data link connector, which is located under LH dash panel near the hood opener handle.

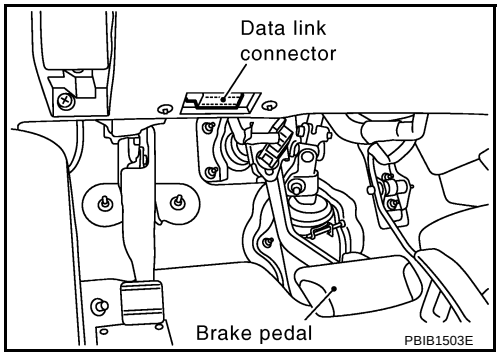

3. Turn ignition switch ON.
4. Enter the program according to instruction on the screen or in the operation manual.
   (*: Regarding GST screens in this section, sample screens are shown.)

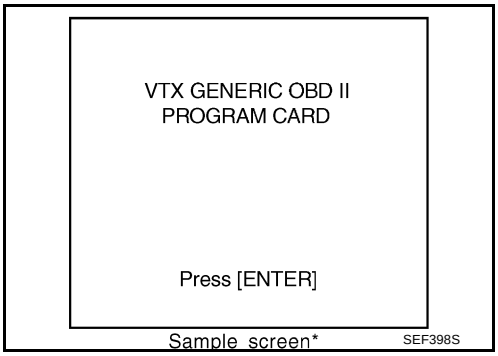

5. Perform each diagnostic mode according to each service procedure.
   For further information, see the GST Operation Manual of the tool maker.

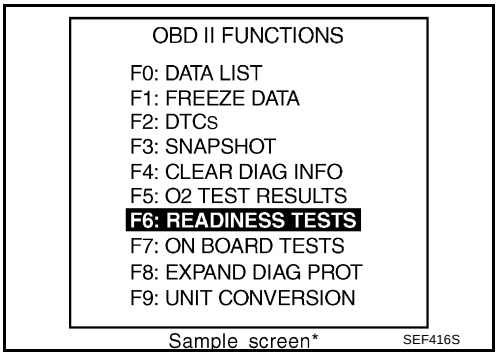

CONSULT-II Reference Value in Data Monitor

ABS007I9

Remarks:
- Specification data are reference values.
- Specification data are output/input values which are detected or supplied by the ECM at the connector.
  * Specification data may not be directly related to their components signals/values/operations.
  i.e. Adjust ignition timing with a timing light before monitoring IGN TIMING, because the monitor may show the specification data in spite of the ignition timing not being adjusted to the specification data. This IGN TIMING monitors the data calculated by the ECM according to the signals input from the camshaft position sensor and other ignition timing related sensors.

MONITOR ITEM	CONDITION		SPECIFICATION
ENG SPEED	● Run engine and compare CONSULT-II value with the tachometer indication.		Almost the same speed as the tachometer indication.
MAS A/F SE-B1	See EC-844, "TROUBLE DIAGNOSIS - SPECIFICATION VALUE" .		
B/FUEL SCHDL	See EC-844, "TROUBLE DIAGNOSIS - SPECIFICATION VALUE" .		
A/F ALPHA-B1 A/F ALPHA-B2	See EC-844, "TROUBLE DIAGNOSIS - SPECIFICATION VALUE" .		
COOLAN TEMP/S	● Engine: After warming up		More than 70°C (158°F)
HO2S1 (B1) HO2S1 (B2)	● Engine: After warming up	Maintaining engine speed at 2,000 rpm	0 - 0.3V ←→ Approx. 0.6 - 1.0V
HO2S2 (B1) HO2S2 (B2)	● Engine: After warming up ● After keeping engine speed between 3,500 and 4,000 rpm for 1 minute and at idle for 1 minute under no load	Revving engine from idle up to 3,000 rpm quickly.	0 - 0.3V ←→ Approx. 0.6 - 1.0V
HO2S1 MNTR (B1) HO2S1 MNTR (B2)	● Engine: After warming up	Maintaining engine speed at 2,000 rpm	LEAN ←→ RICH Changes more than 5 times during 10 seconds.
HO2S2 MNTR (B1) HO2S2 MNTR (B2)	● Engine: After warming up ● After keeping engine speed between 3,500 and 4,000 rpm for 1 minute and at idle for 1 minute under no load	Revving engine from idle up to 3,000 rpm quickly.	LEAN ←→ RICH
VHCL SPEED SE	● Turn drive wheels and compare CONSULT-II value with the speedometer indication.		Almost the same speed as speedometer indication
BATTERY VOLT	● Ignition switch: ON (Engine stopped)		11 - 14V
ACCEL SEN 1	● Ignition switch: ON (Engine stopped)	Accelerator pedal: Fully released	0.5 - 1.0V
		Accelerator pedal: Fully depressed	4.0 - 4.8V
ACCEL SEN 2*	● Ignition switch: ON (Engine stopped)	Accelerator pedal: Fully released	0.3 - 1.2V
		Accelerator pedal: Fully depressed	3.9 - 4.8V
THRTL SEN 1 THRTL SEN 2*	● Ignition switch: ON (Engine stopped) ● Selector lever: D	Accelerator pedal: Fully released	More than 0.36V
		Accelerator pedal: Fully depressed	Less than 4.75V
EVAP SYS PRES	● Ignition switch: ON		Approx. 1.8 - 4.8V
START SIGNAL	● Ignition switch: ON → START → ON		OFF → ON → OFF
CLSD THL POS	● Ignition switch: ON (Engine stopped)	Accelerator pedal: Fully released	ON
		Accelerator pedal: Slightly depressed	OFF
AIR COND SIG	● Engine: After warming up, idle the engine	Air conditioner switch: OFF	OFF
		Air conditioner switch: ON (Compressor operates.)	ON
P/N POSI SW	● Ignition switch: ON	Selector lever: P or N	ON
		Selector lever: Except above	OFF
PW/ST SIGNAL	● Engine: After warming up, idle the engine	Steering wheel: Not being turned (Forward direction)	OFF
		Steering wheel: Being turned	ON

MONITOR ITEM	CONDITION		SPECIFICATION
LOAD SIGNAL	● Ignition switch: ON	Rear window defogger switch: ON and/or Lighting switch: 2ND position	ON
		Rear window defogger switch and lighting switch: OFF	OFF
IGNITION SW	● Ignition switch: ON → OFF → ON		ON → OFF → ON
HEATER FAN SW	● Engine: After warming up, idle the engine	Heater fan switch: ON	ON
		Heater fan switch: OFF	OFF
BRAKE SW	● Ignition switch: ON	Brake pedal: Fully released	OFF
		Brake pedal: Slightly depressed	ON
INJ PULSE-B1 INJ PULSE-B2	● Engine: After warming up ● Selector lever: P or N ● Air conditioner switch: OFF ● No load	Idle	2.0 - 3.0 msec
		2,000 rpm	1.9 - 2.9 msec
IGN TIMING	● Engine: After warming up ● Selector lever: P or N ● Air conditioner switch: OFF ● No load	Idle	7° - 17° BTDC
		2,000 rpm	25° - 45° BTDC
CAL/LD VALUE	● Engine: After warming up ● Selector lever: P or N ● Air conditioner switch: OFF ● No load	Idle	14% - 33%
		2,500 rpm	12% - 25%
MASS AIRFLOW	● Engine: After warming up ● Selector lever: P or N ● Air conditioner switch: OFF ● No load	Idle	2.0 - 6.0 g·m/s
		2,500 rpm	7.0 - 20.0 g·m/s
PURG VOL C/V	● Engine: After warming up ● Selector lever: P or N ● Air conditioner switch: OFF ● No load	Idle	0%
		2,000 rpm	—
INT/V TIM (B1) INT/V TIM (B2)	● Engine: After warming up ● Selector lever: P or N ● Air conditioner switch: OFF ● No load	Idle	–5° - 5°CA
		2,000 rpm	Approx. 0° - 20°CA
INT/V SOL (B1) INT/V SOL (B2)	● Engine: After warming up ● Selector lever: P or N ● Air conditioner switch: OFF ● No load	Idle	0% - 2%
		2,000 rpm	Approx. 25% - 50%
VIAS S/V	● Engine speed: Idle	Selector lever: P or N and/or Engine speed: More than 5,000 rpm	ON
		Except above	OFF
AIR COND RLY	● Engine: After warming up, idle the engine	Air conditioner switch: OFF	OFF
		Air conditioner switch: ON (Compressor operates)	ON
FUEL PUMP RLY	● For 1 seconds after turning ignition switch: ON ● Engine running or cranking		ON
	● Except above		OFF

MONITOR ITEM	CONDITION		SPECIFICATION
VENT CONT/V	● Ignition switch: ON		OFF
THRTL RELAY	● Ignition switch: ON		ON
COOLING FAN	● Engine: After warming up, idle the engine ● Air conditioner switch: OFF	Engine coolant temperature is 94°C (201°F) or less	OFF
		Engine coolant temperature is between 95°C (203°F) and 104°C (219°F)	MID
		Engine coolant temperature is 105°C (221°F) or more	HI
HO2S1 HTR (B1) HO2S1 HTR (B2)	● Engine: After warming up ● Engine speed: Below 3,000 rpm		ON
	● Engine speed: Above 3,000 rpm		OFF
HO2S2 HTR (B1) HO2S2 HTR (B2)	● Engine speed: Below 3,600 rpm after the following conditions are met. – Engine: After warming up – Keeping the engine speed between 3,500 and 4,000 rpm for 1 minute and at idle for 1 minute under no load		ON
	● Engine speed: Above 3,600 rpm		OFF
I/P PULLY SPD	● Vehicle speed: More than 20 km/h (12 MPH)		Almost the same speed as the tachometer indication
VEHICLE SPEED	● Turn drive wheels and compare CONSULT-II value with the speedometer indication.		Almost the same speed as the speedometer indication
TRVL AFTER MIL	● Ignition switch: ON	Vehicle has traveled after MIL has turned ON.	0 - 65,535 km (0 - 40,723 miles)
SNOW MODE SW	● Ignition switch: ON	Snow mode switch: ON	ON
		Snow mode switch: OFF	OFF
O2SEN HTR DTY	● Engine coolant temperature when engine started: More than 80°C (176°F) ● Engine speed: Below 3,000 rpm		Approx. 50%
AC PRESS SEN	● Ignition switch: ON (Engine stopped)		Approx. 0V
	● Engine: Idle ● Air conditioner switch: OFF		1.0 - 4.0V
VHCL SPEED SE	● Turn drive wheels and compare CONSULT-II value with the speedometer indication.		Almost the same speed as the speedometer indication
SET VHCL SPD	● Engine: Running	ASCD: Operating	The preset vehicle speed is displayed
MAIN SW	● Ignition switch: ON	MAIN switch: Pressed	ON
		MAIN switch: Released	OFF
CANCEL SW	● Ignition switch: ON	CANCEL switch: Pressed	ON
		CANCEL switch: Released	OFF
RESUME/ACC SW	● Ignition switch: ON	RESUME/ACCELERATE switch: Pressed	ON
		RESUME/ACCELERATE switch: Released	OFF
SET SW	● Ignition switch: ON	SET/COAST switch: Pressed	ON
		SET/COAST switch: Released	OFF
BRAKE SW1 (ICC/ASCD brake switch)	● Ignition switch: ON	Brake pedal: Fully released	ON
		Brake pedal: Slightly depressed	OFF
BRAKE SW2 (Stop lamp switch)	● Ignition switch: ON	Brake pedal: Fully released	OFF
		Brake pedal: Slightly depressed	ON

MONITOR ITEM	CONDITION		SPECIFICATION
DIST SW	● Ignition switch: ON	DISTANCE switch: Pressed	ON
		DISTANCE switch: Released	OFF
CRUISE LAMP	● Ignition switch: ON	MAIN switch: Pressed at the 1st time → at the 2nd time	ON → OFF
SET LAMP	● MAIN switch: ON ● When vehicle speed is between 40 km/h (25 MPH) and 144 km/h (89 MPH)	ASCD is operating	ON
		ASCD is not operating	OFF

*: Accelerator pedal position sensor 2 signal and throttle position sensor 2 signal are converted by ECM internally. Thus, they differ from ECM terminals voltage signal.

Major Sensor Reference Graph in Data Monitor Mode

ABS007IA

The following are the major sensor reference graphs in “DATA MONITOR” mode.

CLSD THL POS, ACCEL SEN 1, THRTL SEN 1

Below is the data for “CLSD THL POS”, “ACCEL SEN 1” and “THRTL SEN 1” when depressing the accelerator pedal with the ignition switch ON and with selector lever in D position.
The signal of “ACCEL SEN 1” and “THRTL SEN 1” should rise gradually without any intermittent drop or rise after “CLSD THL POS” is changed from “ON” to “OFF”.

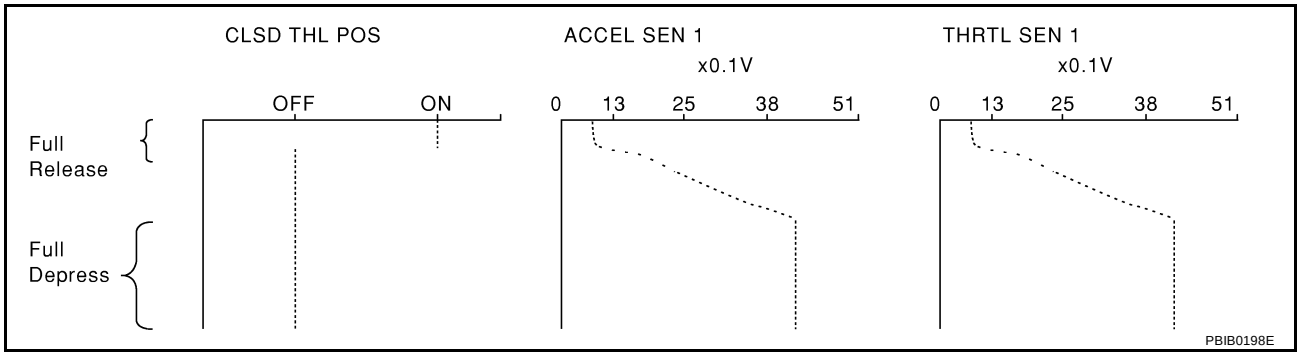

ENG SPEED, MAS A/F SE-B1, THRTL SEN 1, HO2S2 (B1), HO2S1 (B1), INJ PULSE-B1

Below is the data for “ENG SPEED”, “MAS A/F SE-B1”, “THRTL SEN 1”, “HO2S2 (B1)”, “HO2S1 (B1)” and “INJ PULSE-B1” when revving engine quickly up to 4,800 rpm under no load after warming up engine sufficiently.
Each value is for reference, the exact value may vary.

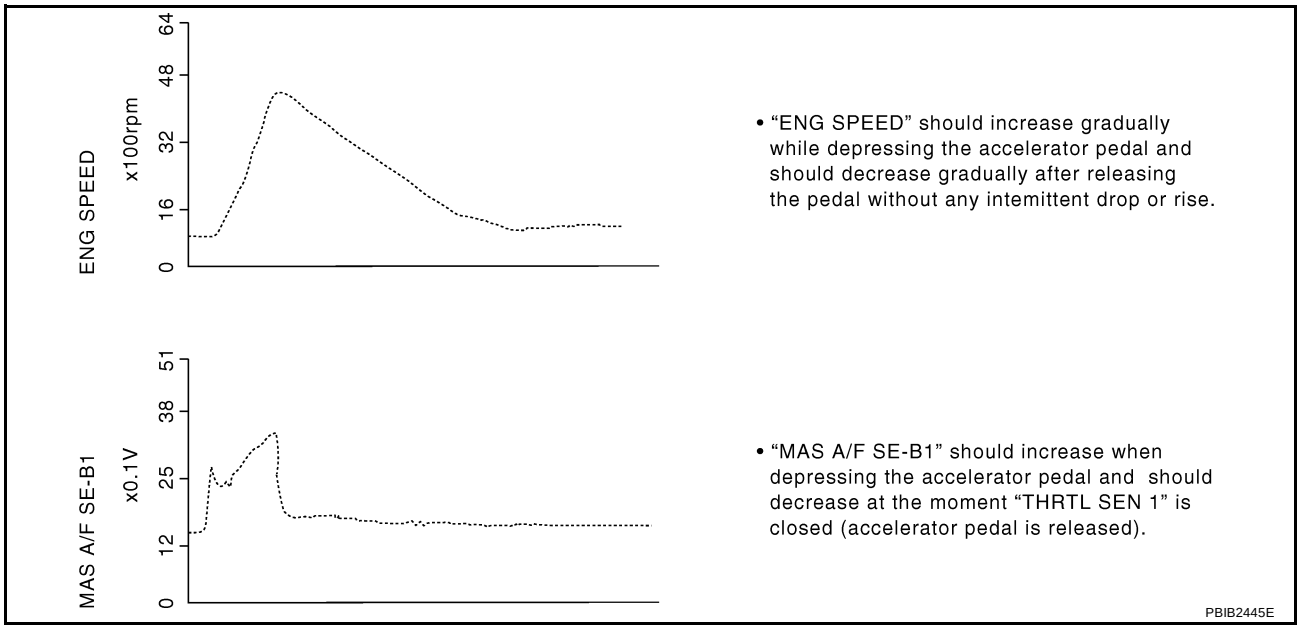

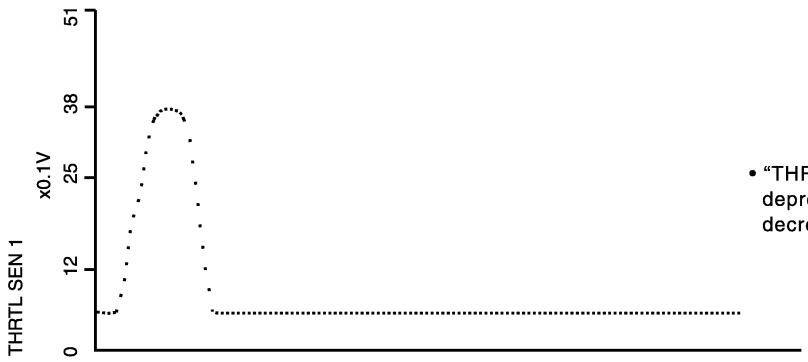

• "THRTL SEN 1" should increase while depressing the accelerator pedal and should decrease while releasing it.

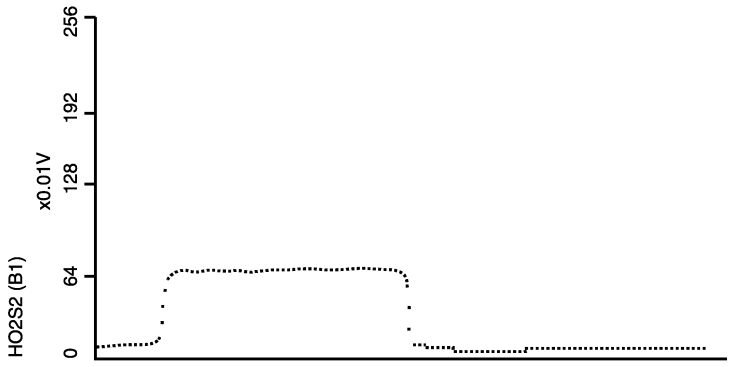

• "HO2S2 (B1)" may increase immediately after depressing the accelerator pedal and may decrease after releasing the pedal.

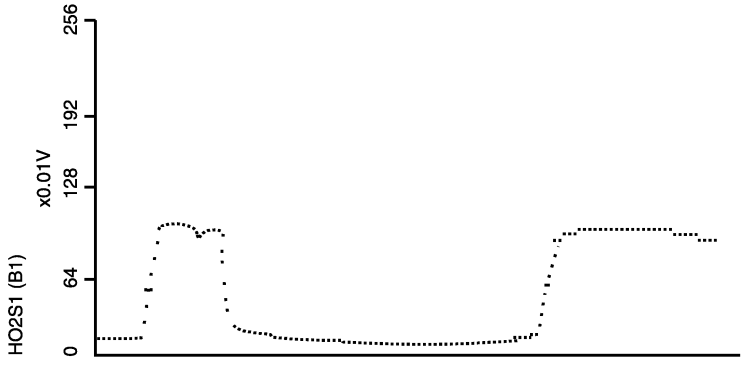

• "HO2S1 (B1)" may increase immediately after depressing the accelerator pedal and may decrease after releasing the pedal.

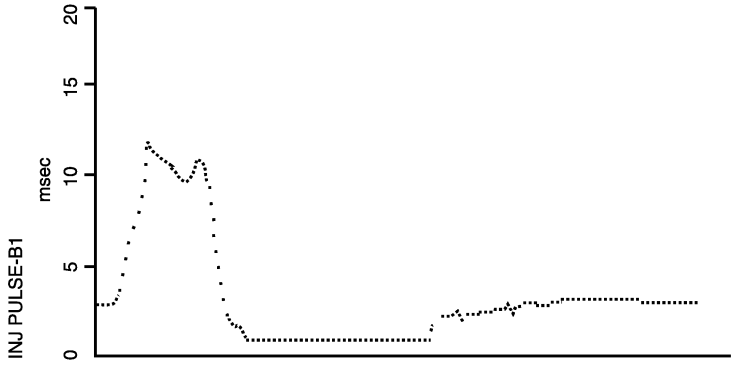

• "INJ PULSE-B1" should increase when depressing the accelerator pedal and should decrease when the pedal is released.

PBIB0668E

TROUBLE DIAGNOSIS - SPECIFICATION VALUE

PFP:00031

Description

ABS00E4K

The specification (SP) value indicates the tolerance of the value that is displayed in “DATA MONITOR (SPEC)” mode of CONSULT-II during normal operation of the Engine Control System. When the value in “DATA MONITOR (SPEC)” mode is within the SP value, the Engine Control System is confirmed OK. When the value in “DATA MONITOR (SPEC)” mode is NOT within the SP value, the Engine Control System may have one or more malfunctions.
The SP value is used to detect malfunctions that may affect the Engine Control System, but will not light the MIL.
The SP value will be displayed for the following three items:

- B/FUEL SCHDL (The fuel injection pulse width programmed into ECM prior to any learned on board correction)
- A/F ALPHA-B1/B2 (The mean value of air-fuel ratio feedback correction factor per cycle)
- MAS A/F SE-B1 (The signal voltage of the mass air flow sensor)

Testing Condition

ABS00E4L

- Vehicle driven distance: More than 5,000 km (3,017 miles)
- Barometric pressure: 98.3 - 104.3 kPa (1.003 - 1.064 kg/cm^2 , 14.25 - 15.12 psi)
- Atmospheric temperature: 20 - 30°C (68 - 86°F)
- Engine coolant temperature: 75 - 95°C (167 - 203°F)
- Transmission: Warmed-up*1
- Electrical load: Not applied*2
- Engine speed: Idle

*1: After the engine is warmed up to normal operating temperature, drive vehicle until “ATF TEMP 1” (A/T fluid temperature sensor signal) indicates more than 60°C (140°F).
*2: Rear window defogger switch, air conditioner switch, lighting switch are OFF. Steering wheel is straight ahead.

Inspection Procedure

ABS00E4M

NOTE:
Perform “DATA MONITOR (SPEC)” mode in maximum scale display.

1. Perform EC-769, "Basic Inspection" .
2. Confirm that the testing conditions indicated above are met.
3. Select “B/FUEL SCHDL”, “A/F ALPHA-B1”, “A/F ALPHA-B2” and “MAS A/F SE-B1” in “DATA MONITOR (SPEC)” mode with CONSULT-II.
4. Make sure that monitor items are within the SP value.
5. If NG, go to EC-845, "Diagnostic Procedure" .

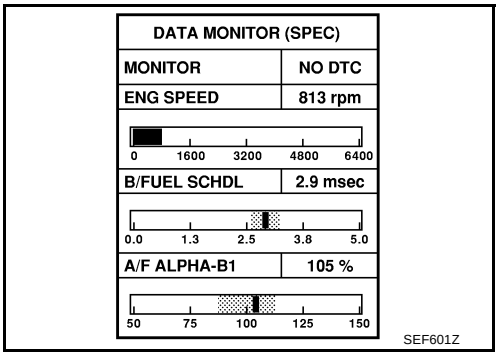

Diagnostic Procedure

ABS00E4N

OVERALL SEQUENCE

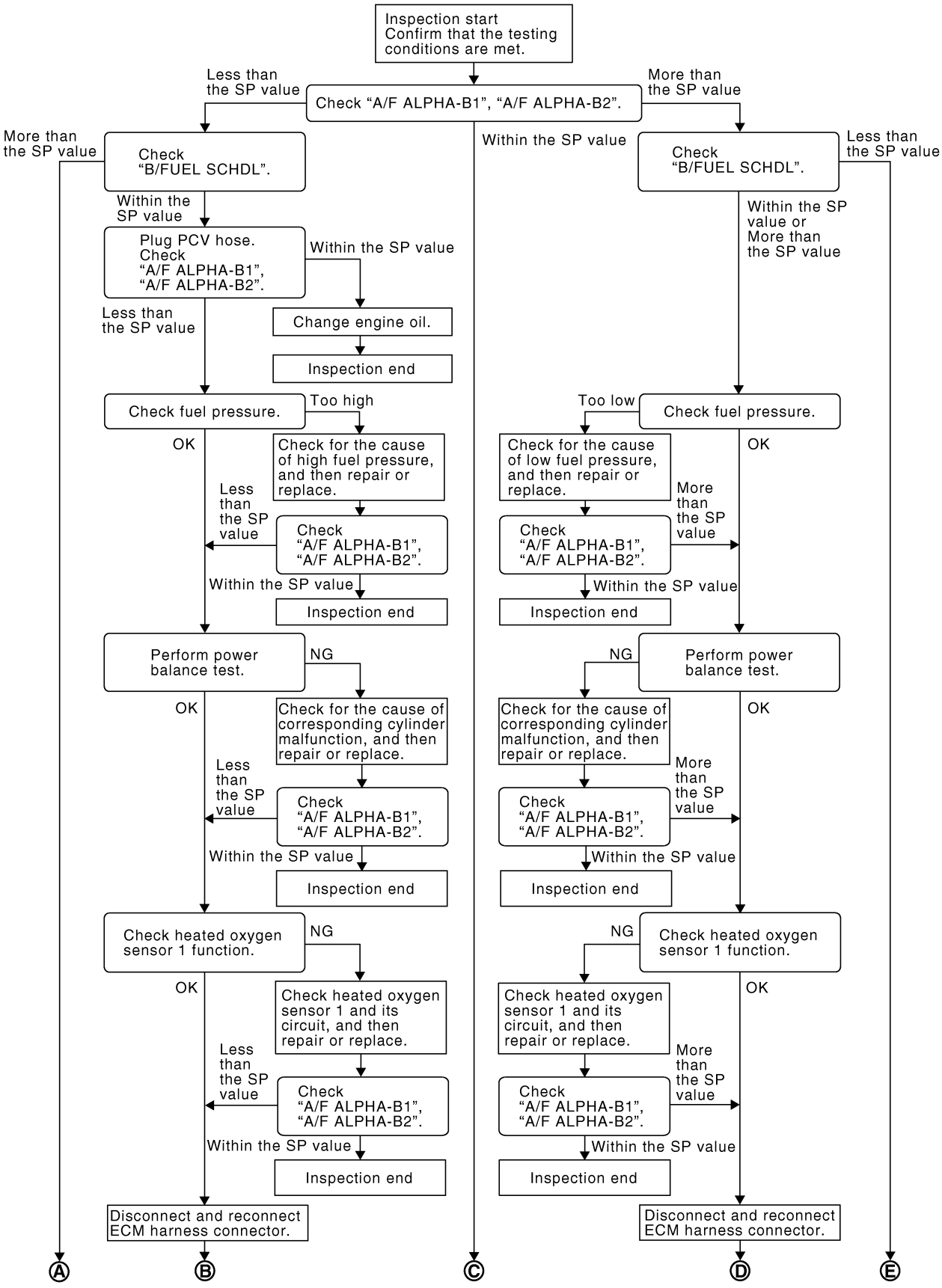

PBIB2446E

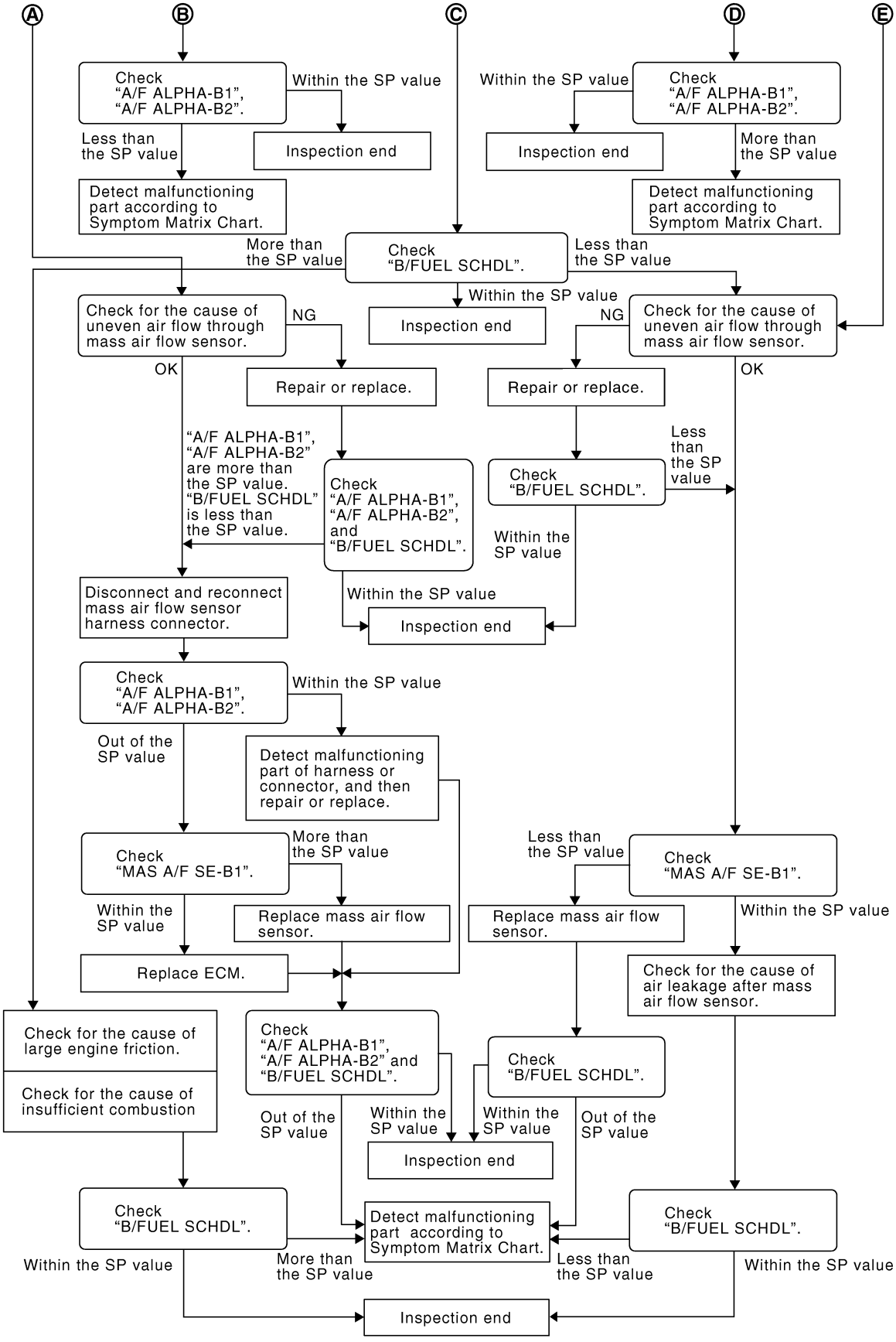
A
B
C
D
E
Check "A/F ALPHA-B1", "A/F ALPHA-B2".
Within the SP value
Inspection end
Less than the SP value
Detect malfunctioning part according to Symptom Matrix Chart.
Check "A/F ALPHA-B1", "A/F ALPHA-B2".
Within the SP value
Inspection end
More than the SP value
Detect malfunctioning part according to Symptom Matrix Chart.
More than the SP value
Check "B/FUEL SCHDL".
Less than the SP value
Within the SP value
Inspection end
Check for the cause of uneven air flow through mass air flow sensor.
NG
OK
Repair or replace.
Check for the cause of uneven air flow through mass air flow sensor.
NG
OK
Repair or replace.
"A/F ALPHA-B1", "A/F ALPHA-B2" are more than the SP value. "B/FUEL SCHDL" is less than the SP value.
Check "A/F ALPHA-B1", "A/F ALPHA-B2", and "B/FUEL SCHDL".
Check "B/FUEL SCHDL".
Less than the SP value
Within the SP value
Within the SP value
Inspection end
Disconnect and reconnect mass air flow sensor harness connector.
Check "A/F ALPHA-B1", "A/F ALPHA-B2".
Within the SP value
Out of the SP value
Detect malfunctioning part of harness or connector, and then repair or replace.
Check "MAS A/F SE-B1".
More than the SP value
Within the SP value
Replace mass air flow sensor.
Replace ECM.
Less than the SP value
Check "MAS A/F SE-B1".
Replace mass air flow sensor.
Within the SP value
Check for the cause of air leakage after mass air flow sensor.
Check for the cause of large engine friction.
Check for the cause of insufficient combustion
Check "A/F ALPHA-B1", "A/F ALPHA-B2" and "B/FUEL SCHDL".
Check "B/FUEL SCHDL".
Out of the SP value
Within the SP value
Within the SP value
Out of the SP value
Inspection end
Check "B/FUEL SCHDL".
Detect malfunctioning part according to Symptom Matrix Chart.
Check "B/FUEL SCHDL".
Within the SP value
More than the SP value
Less than the SP value
Within the SP value
Inspection end
PBIB2548E

DETAILED PROCEDURE

1. CHECK “A/F ALPHA-B1”, “A/F ALPHA-B2”

1. Start engine.
2. Confirm that the testing conditions are met. Refer to EC-844, "Testing Condition" .
3. Select “A/F ALPHA-B1”, “A/F ALPHA-B2” in “DATA MONITOR (SPEC)” mode, and make sure that the each indication is within the SP value.

   NOTE:
   Check “A/F ALPHA-B1”, “A/F ALPHA-B2” for approximately 1 minute because they may fluctuate. It is NG if the indication is out of the SP value even a little.

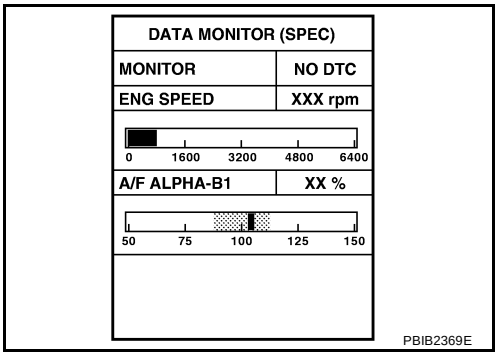

OK or NG

OK >> GO TO 17.
NG (Less than the SP value)>>GO TO 2.
NG (More than the SP value)>>GO TO 3.

2. CHECK “B/FUEL SCHDL”

Select “B/FUEL SCHDL” in “DATA MONITOR (SPEC)” mode, and make sure that the indication is within the SP value.

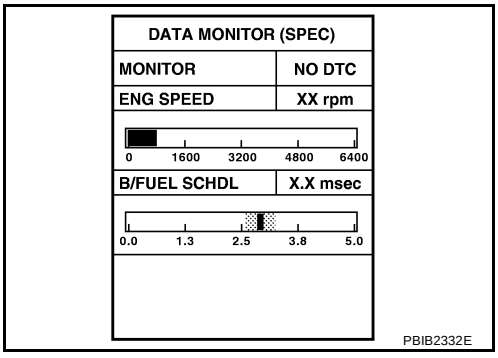

OK or NG

OK >> GO TO 4.
NG (More than the SP value)>>GO TO 19.

3. CHECK “B/FUEL SCHDL”

Select “B/FUEL SCHDL” in “DATA MONITOR (SPEC)” mode, and make sure that the indication is within the SP value.

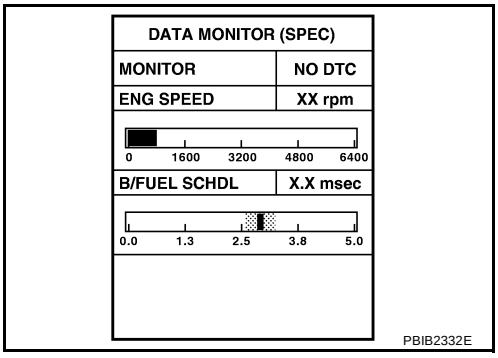

OK or NG

OK >> GO TO 6.
NG (More than the SP value)>>GO TO 6.
NG (Less than the SP value)>>GO TO 25.

4. CHECK “A/F ALPHA-B1”, “A/F ALPHA-B2”

1. Stop the engine.
2. Disconnect PCV hose, and then plug it.
3. Start engine.
4. Select “A/F ALPHA-B1”, “A/F ALPHA-B2” in “DATA MONITOR (SPEC)” mode, and make sure that the each indication is within the SP value.

OK or NG

OK >> GO TO 5.
NG >> GO TO 6.

5. CHANGE ENGINE OIL

1. Stop the engine.
2. Change engine oil.

NOTE:
This symptom may occur when a large amount of gasoline is mixed with engine oil because of driving conditions (such as when engine oil temperature does not rise enough since a journey distance is too short during winter). The symptom will not be detected after changing engine oil or changing driving condition.

>> **INSPECTION END**

6. CHECK FUEL PRESSURE

Check fuel pressure. (Refer to EC-789, "Fuel Pressure Check" .)

OK or NG

OK >> GO TO 9.
NG (Fuel pressure is too high)>>Replace fuel pressure regulator, refer to EC-789 . GO TO 8.
NG (Fuel pressure is too low)>>GO TO 7.

7. DETECT MALFUNCTIONING PART

1. Check the following.
- Clogged and bent fuel hose and fuel tube
- Clogged fuel filter
- Fuel pump and its circuit (Refer to EC-1358 .)
2. If NG, repair or replace the malfunctioning part. (Refer to EC-789 .)
If OK, replace fuel pressure regulator.

>> GO TO 8.

8. CHECK “A/F ALPHA-B1”, “A/F ALPHA-B2”

1. Start engine.
2. Select “A/F ALPHA-B1”, “A/F ALPHA-B2” in “DATA MONITOR (SPEC)” mode, and make sure that the each indication is within the SP value.

OK or NG

OK >> **INSPECTION END**
NG >> GO TO 9.

9. PERFORM POWER BALANCE TEST

1. Perform “POWER BALANCE” in “ACTIVE TEST” mode.
2. Make sure that the each cylinder produces a momentary engine speed drop.

OK or NG

OK >> GO TO 12.
NG >> GO TO 10.

ACTIVE TEST	
POWER BALANCE	
MONITOR	
ENG SPEED	XXX rpm
MAS A/F SE-B1	XXX V

PBIB0133E

10. DETECT MALFUNCTIONING PART

1. Check the following.
- Ignition coil and its circuit (Refer to EC-1339 .)
- Fuel injector and its circuit (Refer to EC-1351 .)
- Intake air leakage
- Low compression pressure (Refer to EM-229 .)
2. If NG, repair or replace the malfunctioning part.
   If OK, replace fuel injector. (It may be caused by leakage from fuel injector or clogging.)

>> GO TO 11.

11. CHECK "A/F ALPHA-B1", "A/F ALPHA-B2"

1. Start engine.
2. Select "A/F ALPHA-B1", "A/F ALPHA-B2" in "DATA MONITOR (SPEC)" mode, and make sure that the each indication is within the SP value.

OK or NG

OK >> **INSPECTION END**
NG >> GO TO 12.

12. CHECK HEATED OXYGEN SENSOR 1 FUNCTION

1. Run engine at about 2,000 rpm for about 2 minutes under no-load.
2. Select "HO2S1 MNTR (B1)", "HO2S1 MNTR (B2)" in "DATA MONITOR" mode.
3. Running engine at 2,000 rpm under no-load (The engine is warmed up to normal operating temperature.), check that the monitor fluctuates between LEAN and RICH more than 5 times during 10 seconds.

   1 time: RICH → LEAN → RICH

   2 time: RICH → LEAN → RICH → LEAN → RICH

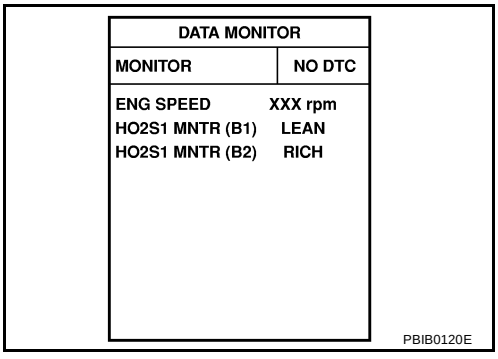

OK or NG

OK >> GO TO 15.
NG >> GO TO 13.

13. CHECK HEATED OXYGEN SENSOR 1 CIRCUIT

Check heated oxygen sensor 1 and its circuit. Refer to EC-935 .

>> GO TO 14.

14. CHECK "A/F ALPHA-B1", "A/F ALPHA-B2"

1. Start engine.
2. Select "A/F ALPHA-B1", "A/F ALPHA-B2" in "DATA MONITOR (SPEC)" mode, and make sure that the each indication is within the SP value.

OK or NG

OK >> **INSPECTION END**
NG >> GO TO 15.

15. DISCONNECT AND RECONNECT ECM HARNESS CONNECTOR

1. Stop the engine.
2. Disconnect ECM harness connector. Check pin terminal and connector for damage, and then reconnect it.

>> GO TO 16.

16. CHECK “A/F ALPHA-B1”, “A/F ALPHA-B2”

1. Start engine.
2. Select “A/F ALPHA-B1”, “A/F ALPHA-B2” in “DATA MONITOR (SPEC)” mode, and make sure that the each indication is within the SP value.

OK or NG

OK >> **INSPECTION END**
NG >> Detect malfunctioning part according to EC-800, "Symptom Matrix Chart" .

17. CHECK “B/FUEL SCHDL”

Select “B/FUEL SCHDL” in “DATA MONITOR (SPEC)” mode, and make sure that the indication is within the SP value.

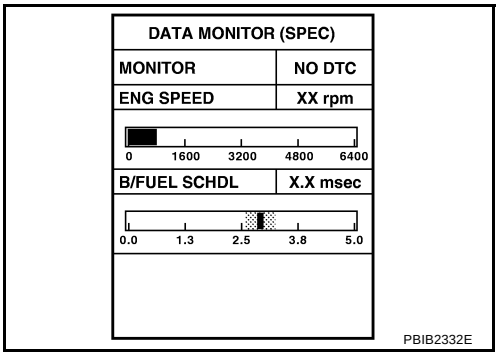

OK or NG

OK >> **INSPECTION END**
NG (More than the SP value)>>GO TO 18.
NG (Less than the SP value)>>GO TO 25.

18. DETECT MALFUNCTIONING PART

1. Check for the cause of large engine friction. Refer to the following.
- Engine oil level is too high
- Engine oil viscosity
- Belt tension of power steering, alternator, A/C compressor, etc. is excessive
- Noise from engine
- Noise from transmission, etc.
2. Check for the cause of insufficient combustion. Refer to the following.
- Valve clearance malfunction
- Intake valve timing control function malfunction
- Camshaft sprocket installation malfunction, etc.

>> Repair or replace malfunctioning part, and then GO TO 30.

19. CHECK INTAKE SYSTEM

Check for the cause of uneven air flow through mass air flow sensor. Refer to the following.

- Crushed air ducts
- Malfunctioning seal of air cleaner element
- Uneven dirt of air cleaner element
- Improper specification of intake air system

OK or NG

OK >> GO TO 21.
NG >> Repair or replace malfunctioning part, and then GO TO 20.

20. CHECK “A/F ALPHA-B1”, “A/F ALPHA-B2”, AND “B/FUEL SCHDL”

Select “A/F ALPHA-B1”, “A/F ALPHA-B2”, and “B/FUEL SCHDL” in “DATA MONITOR (SPEC)” mode, and make sure that the each indication is within the SP value.

OK or NG

OK >> **INSPECTION END**

NG (“B/FUEL SCHDL” is more, “A/F ALPHA-B1”, “A/F ALPHA-B2” are less than the SP value)>>GO TO 21.

21. DISCONNECT AND RECONNECT MASS AIR FLOW SENSOR HARNESS CONNECTOR

1. Stop the engine.
2. Disconnect mass air flow sensor harness connector. Check pin terminal and connector for damage and then reconnect it again.

>> GO TO 22.

22. CHECK “A/F ALPHA-B1”, “A/F ALPHA-B2”

1. Start engine.
2. Select “A/F ALPHA-B1”, “A/F ALPHA-B2” in “DATA MONITOR (SPEC)” mode, and make sure that the each indication is within the SP value.

OK or NG

OK >> 1. Detect malfunctioning part of mass air flow sensor circuit and repair it. Refer to EC-902 .
2. GO TO 29.

NG >> GO TO 23.

23. CHECK “MAS A/F SE-B1”

Select “MAS A/F SE-B1” in “DATA MONITOR (SPEC)” mode, and make sure that the indication is within the SP value.

OK or NG

OK >> GO TO 24.

NG (More than the SP value)>>Replace mass air flow sensor, and then GO TO 29.

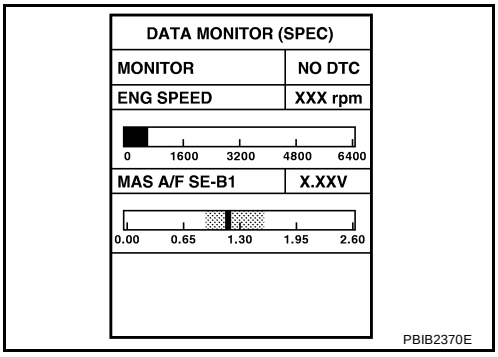

24. REPLACE ECM

1. Replace ECM.
2. Perform initialization of NVIS(NATS) system and registration of all NVIS(NATS) ignition key IDs. Refer to BL-215, "ECM Re-Communicating Function" .
3. Perform EC-786, "VIN Registration" .
4. Perform EC-786, "Accelerator Pedal Released Position Learning" .
5. Perform EC-786, "Throttle Valve Closed Position Learning" .
6. Perform EC-787, "Idle Air Volume Learning" .

>> GO TO 29.

25. CHECK INTAKE SYSTEM

Check for the cause of uneven air flow through mass air flow sensor. Refer to the following.

- Crushed air ducts
- Malfunctioning seal of air cleaner element
- Uneven dirt of air cleaner element
- Improper specification of intake air system

OK or NG

OK >> GO TO 27.
NG >> Repair or replace malfunctioning part, and then GO TO 26.

26. CHECK "B/FUEL SCHDL"

Select "B/FUEL SCHDL" in "DATA MONITOR (SPEC)" mode, and make sure that the indication is within the SP value.

OK or NG

OK >> **INSPECTION END**
NG (Less than the SP value)>>GO TO 27.

27. CHECK "MAS A/F SE-B1"

Select "MAS A/F SE-B1" in "DATA MONITOR (SPEC)" mode, and make sure that the indication is within the SP value.

OK or NG

OK >> GO TO 28.
NG (Less than the SP value)>>Replace mass air flow sensor, and then GO TO 30.

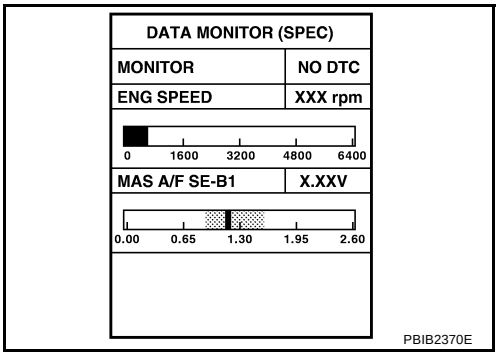

28. CHECK INTAKE SYSTEM

Check for the cause of air leak after the mass air flow sensor. Refer to the following.

- Disconnection, looseness, and cracks in air duct
- Looseness of oil filler cap
- Disconnection of oil level gauge
- Open stuck, breakage, hose disconnection, or cracks of PCV valve
- Disconnection or cracks of EVAP purge hose, open stuck of EVAP canister purge volume control solenoid valve
- Malfunctioning seal of rocker cover gasket
- Disconnection, looseness, or cracks of hoses, such as vacuum hose, connecting to intake air system parts
- Malfunctioning seal of intake air system, etc.

>> GO TO 30.

29. CHECK "A/F ALPHA-B1", "A/F ALPHA-B2", AND "B/FUEL SCHDL"

Select "A/F ALPHA-B1", "A/F ALPHA-B2", and "B/FUEL SCHDL" in "DATA MONITOR (SPEC)" mode, and make sure that the each indication is within the SP value.

OK or NG

OK >> **INSPECTION END**
NG >> Detect malfunctioning part according to EC-800, "Symptom Matrix Chart" .

30. CHECK “B/FUEL SCHDL”

Select “B/FUEL SCHDL” in “DATA MONITOR (SPEC)” mode, and then make sure that the indication is within the SP value.

OK or NG

OK >> **INSPECTION END**
NG >> Detect malfunctioning part according to EC-800, "Symptom Matrix Chart" .

TROUBLE DIAGNOSIS FOR INTERMITTENT INCIDENT

PFP:00006

Description

ABS00E4O

Intermittent incidents may occur. In many cases, the malfunction resolves itself (the part or circuit function returns to normal without intervention). It is important to realize that the symptoms described in the customer's complaint often do not recur on (1st trip) DTC visits. Realize also that the most frequent cause of intermittent incidents occurrences is poor electrical connections. Because of this, the conditions under which the incident occurred may not be clear. Therefore, circuit checks made as part of the standard diagnostic procedure may not indicate the specific malfunctioning area.

Common Intermittent Incidents Report Situations

STEP in Work Flow	Situation
2	The CONSULT-II is used. The SELF-DIAG RESULTS screen shows time data other than [0] or [1t].
3 or 4	The symptom described by the customer does not recur.
5	(1st trip) DTC does not appear during the DTC Confirmation Procedure.
10	The Diagnostic Procedure for PXXXX does not indicate the malfunctioning area.

Diagnostic Procedure

ABS00E4P

1. INSPECTION START

Erase (1st trip) DTCs. Refer to EC-758, "HOW TO ERASE EMISSION-RELATED DIAGNOSTIC INFORMATION" .

>> GO TO 2.

2. CHECK GROUND TERMINALS

Check ground terminals for corroding or loose connection.
Refer to EC-861, "Ground Inspection" .

OK or NG

OK >> GO TO 3.
NG >> Repair or replace.

3. SEARCH FOR ELECTRICAL INCIDENT

Perform GI-27, "How to Perform Efficient Diagnosis for an Electrical Incident" , “INCIDENT SIMULATION TESTS”.

OK or NG

OK >> GO TO 4.
NG >> Repair or replace.

4. CHECK CONNECTOR TERMINALS

Refer to GI-24, "How to Check Terminal" , “HOW TO PROBE CONNECTORS”, “How to Check Enlarged Contact Spring of Terminal”.

OK or NG

OK >> **INSPECTION END**
NG >> Repair or replace connector.

POWER SUPPLY AND GROUND CIRCUIT

PFP:24110

Wiring Diagram

ABS007IH

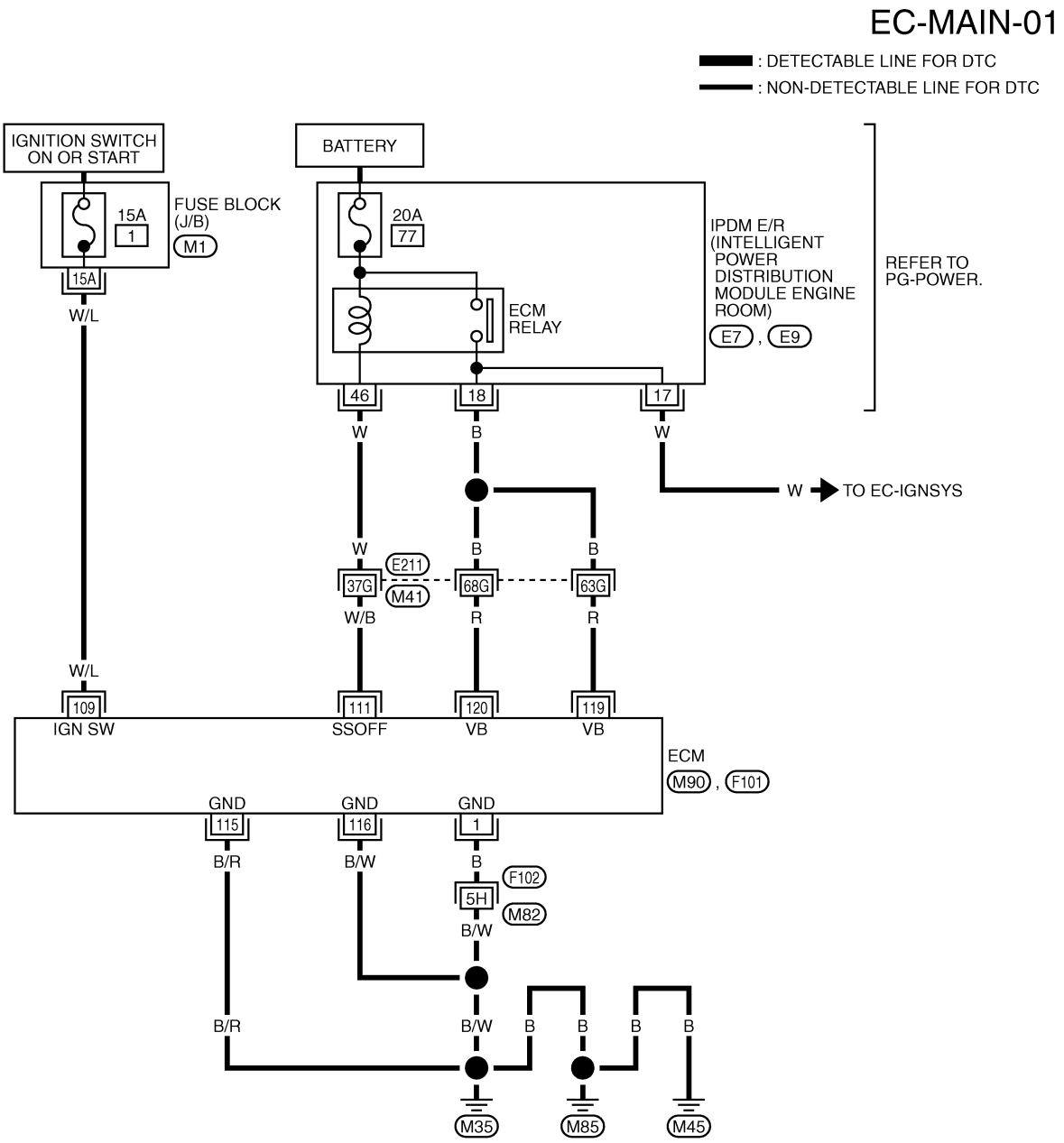

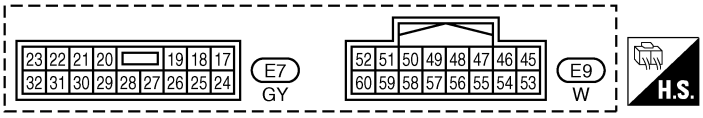

REFER TO THE FOLLOWING.
E211 , F102 -SUPER MULTIPLE JUNCTION (SMJ)
M1 -FUSE BLOCK-JUNCTION BOX (J/B)

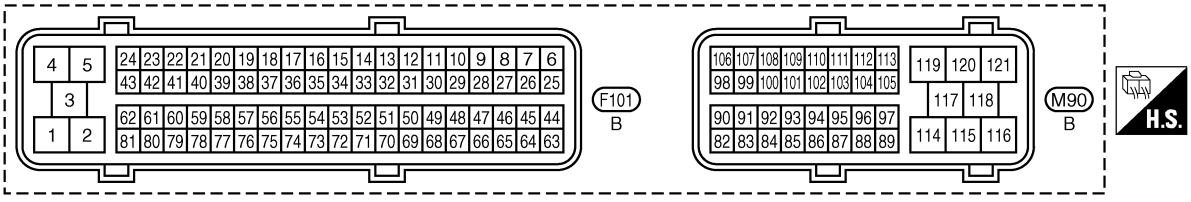

TBWM0217E

Specification data are reference values and are measured between each terminal and ground.

CAUTION:
Do not use ECM ground terminals when measuring input/output voltage. Doing so may result in damage to the ECM's transistor. Use a ground other than ECM terminals, such as the ground.

TERMINAL NO.	WIRE COLOR	ITEM	CONDITION	DATA (DC Voltage)
1	B	ECM ground	**[Engine is running]** ● Idle speed	Body ground
109	W/L	Ignition switch	**[Ignition switch: OFF]**	0V
			[Ignition switch: ON]	BATTERY VOLTAGE (11 - 14V)
111	W/B	ECM relay (Self shut-off)	**[Engine is running]** **[Ignition switch: OFF]** ● For a few seconds after turning ignition switch OFF	0 - 1.5V
			[Ignition switch: OFF] ● More than a few seconds after turning ignition switch OFF	BATTERY VOLTAGE (11 - 14V)
115 116	B/R B/W	ECM ground	**[Engine is running]** ● Idle speed	Body ground
119 120	R R	Power supply for ECM	**[Ignition switch: ON]**	BATTERY VOLTAGE (11 - 14V)

Diagnostic Procedure

ABS007II

1. INSPECTION START

Start engine.
Is engine running?

Yes or No

Yes >> GO TO 8.
No >> GO TO 2.

2. CHECK ECM POWER SUPPLY CIRCUIT-I

1. Turn ignition switch OFF and then ON.
2. Check voltage between ECM terminal 109 and ground with CONSULT-II or tester.

Voltage: Battery voltage

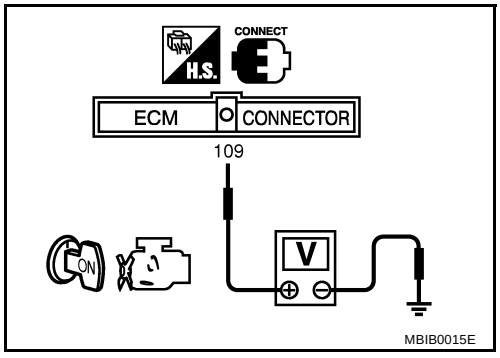

OK or NG

OK >> GO TO 4.
NG >> GO TO 3.

3. DETECT MALFUNCTIONING PART

Check the following.

- Fuse block (J/B) connector M1
- 15A fuse
- Harness for open or short between ECM and fuse

>> Repair open circuit or short to ground or short to power in harness or connectors.

4. CHECK GROUND CONNECTIONS

1. Turn ignition switch OFF.
2. Loosen and retighten three ground screws on the body.
   Refer to EC-861, "Ground Inspection" .

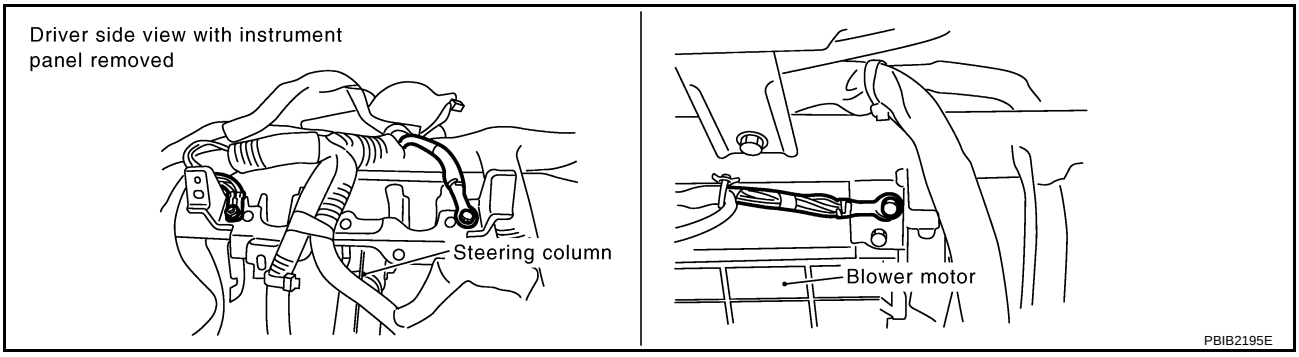

OK or NG

OK >> GO TO 5.
NG >> Repair or replace ground connections.

5. CHECK ECM GROUND CIRCUIT FOR OPEN AND SHORT-I

1. Disconnect ECM harness connector.
2. Check harness continuity between ECM terminals 1, 115, 116 and ground.
   Refer to Wiring Diagram.

   Continuity should exist.

3. Also check harness for short to power.

OK or NG

OK >> GO TO 7.
NG >> GO TO 6.

6. DETECT MALFUNCTIONING PART

Check the following.

- Harness connectors F102, M82
- Harness for open or short between ECM and ground

>> Repair open circuit or short to power in harness or connectors.

7. CHECK ECM POWER SUPPLY CIRCUIT-II

1. Reconnect ECM harness connector.
2. Turn ignition switch ON.
3. Check voltage between IPDM E/R terminal 17 and ground with CONSULT-II or tester.

Voltage: Battery voltage

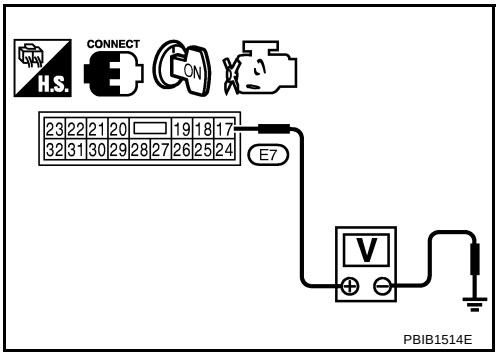

OK or NG

OK >> Go to EC-1339, "IGNITION SIGNAL" .
NG >> GO TO 8.

8. CHECK ECM POWER SUPPLY CIRCUIT-III

1. Turn ignition switch ON and then OFF.
2. Check voltage between ECM terminals 119, 120 and ground with CONSULT-II or tester.

Voltage: After turning ignition switch OFF, battery voltage will exist for a few seconds, then drop approximately 0V.

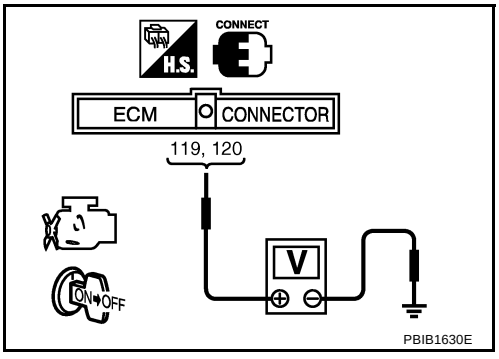

OK or NG

OK >> GO TO 15.
NG (Battery voltage does not exist.)>>GO TO 9.
NG (Battery voltage exists for more than a few seconds.)>>GO TO 12.

9. CHECK ECM POWER SUPPLY CIRCUIT-IV

1. Turn ignition switch OFF and wait at least 10 seconds.
2. Check voltage between ECM terminal 111 and ground with CONSULT-II or tester.

Voltage: Battery voltage

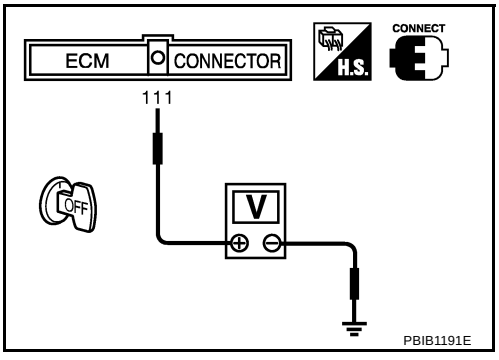

OK or NG

OK >> GO TO 10.
NG >> GO TO 12.

10. CHECK ECM POWER SUPPLY CIRCUIT-V

1. Disconnect ECM harness connector.
2. Disconnect IPDM E/R harness connector E7.
3. Check harness continuity between ECM terminals 119, 120 and IPDM E/R terminal 18. Refer to Wiring Diagram.

Continuity should exist.

4. Also check harness for short to ground and short to power.

OK or NG

OK >> GO TO 18.
NG >> GO TO 11.

11. DETECT MALFUNCTIONING PART

Check the following.

- Harness or connectors E211, M41
- Harness for open or short between ECM and IPDM E/R

>> Repair open circuit or short to ground or short to power in harness or connectors.

12. CHECK ECM POWER SUPPLY CIRCUIT-VI

1. Disconnect ECM harness connector.
2. Disconnect IPDM E/R harness connector E9.
3. Check harness continuity between ECM terminal 111 and IPDM E/R terminal 46.
   Refer to Wiring Diagram.

   Continuity should exist.

4. Also check harness for short to ground and short to power.

OK or NG

OK >> GO TO 14.
NG >> GO TO 13.

13. DETECT MALFUNCTIONING PART

Check the following.

- Harness or connectors E211, M41
- Harness for open or short between ECM and IPDM E/R

>> Repair open circuit or short to ground or short to power in harness or connectors.

14. CHECK 20A FUSE

1. Disconnect 20A fuse from IPDM E/R.
2. Check 20A fuse.

OK or NG

OK >> GO TO 18.
NG >> Replace 20A fuse.

15. CHECK GROUND CONNECTIONS

1. Loosen and retighten three ground screws on the body.
   Refer to EC-861, "Ground Inspection" .

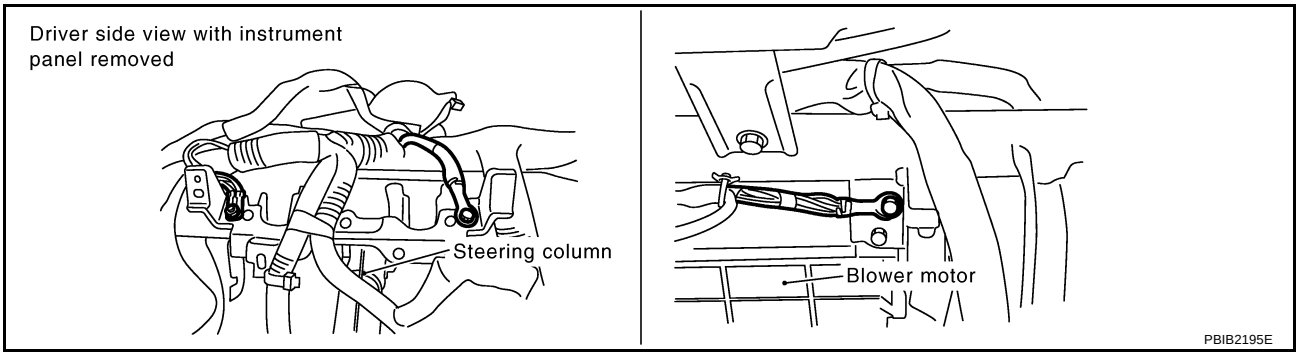

OK or NG

OK >> GO TO 16.
NG >> Repair or replace ground connections.

16. CHECK ECM GROUND CIRCUIT FOR OPEN AND SHORT-II

1. Disconnect ECM harness connector.
2. Check harness continuity between ECM terminals 1, 115, 116 and ground.
   Refer to Wiring Diagram.

   Continuity should exist.

3. Also check harness for short to power.

OK or NG

OK >> GO TO 18.
NG >> GO TO 17.

17. DETECT MALFUNCTIONING PART

Check the following.

- Harness or connectors F102, M82
- Harness for open or short between ECM and ground

>> Repair open circuit or short to power in harness or connectors.

18. CHECK INTERMITTENT INCIDENT

Refer to EC-854, "TROUBLE DIAGNOSIS FOR INTERMITTENT INCIDENT" .

OK or NG

OK >> Replace IPDM E/R.
NG >> Repair open circuit or short to power in harness or connectors.

Ground Inspection

ABS00AN0

Ground connections are very important to the proper operation of electrical and electronic circuits. Ground connections are often exposed to moisture, dirt and other corrosive elements. The corrosion (rust) can become an unwanted resistance. This unwanted resistance can change the way a circuit works.
Electronically controlled circuits are very sensitive to proper grounding. A loose or corroded ground can drastically affect an electronically controlled circuit. A poor or corroded ground can easily affect the circuit. Even when the ground connection looks clean, there can be a thin film of rust on the surface.
When inspecting a ground connection follow these rules:

- Remove the ground bolt or screw.
- Inspect all mating surfaces for tarnish, dirt, rust, etc.
- Clean as required to assure good contact.
- Reinstall bolt or screw securely.
- Inspect for “add-on” accessories which may be interfering with the ground circuit.
- If several wires are crimped into one ground eyelet terminal, check for proper crimps. Make sure all of the wires are clean, securely fastened and providing a good ground path. If multiple wires are cased in one eyelet make sure no ground wires have excess wire insulation.

For detailed ground distribution information, refer to PG-31, "Ground Distribution" .

Ground Inspection

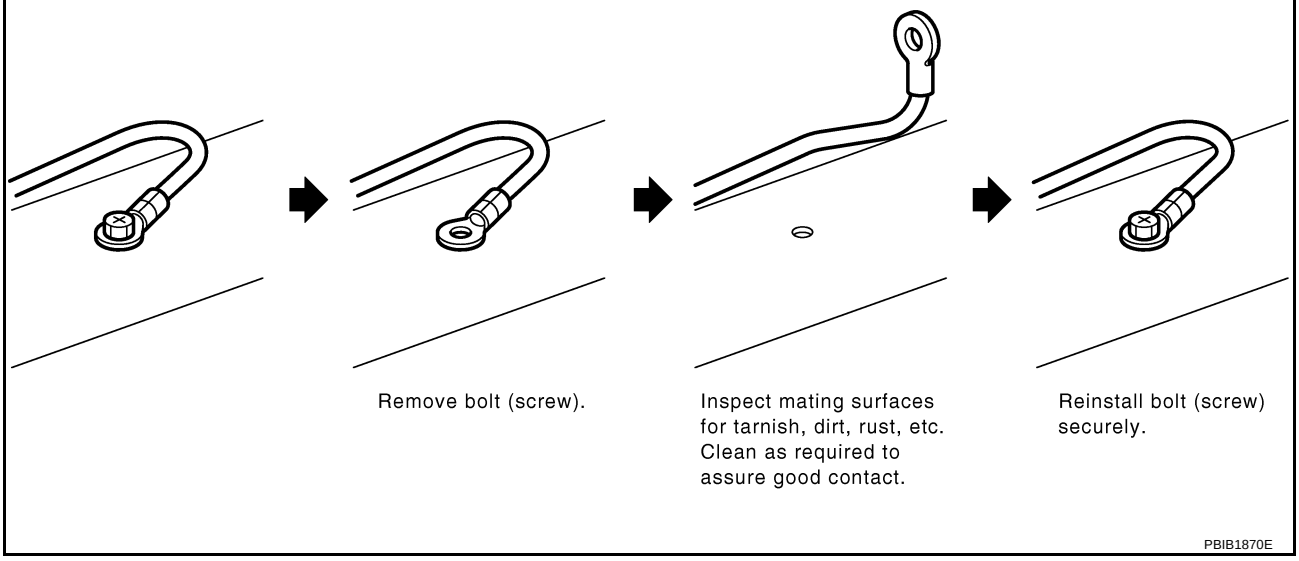

DTC U1000, U1001 CAN COMMUNICATION LINE

PFP:23710

Description

ABS007IJ

CAN (Controller Area Network) is a serial communication line for real time application. It is an on-vehicle multiplex communication line with high data communication speed and excellent error detection ability. Many electronic control units are equipped onto a vehicle, and each control unit shares information and links with other control units during operation (not independent). In CAN communication, control units are connected with 2 communication lines (CAN H line, CAN L line) allowing a high rate of information transmission with less wiring. Each control unit transmits/receives data but selectively reads required data only.

On Board Diagnosis Logic

ABS007IK

DTC No.	Trouble diagnosis name	DTC detecting condition	Possible cause
U1000*1 1000*1	CAN communication line	● ECM cannot communicate to other control units. ● ECM cannot communicate for more than the specified time.	● Harness or connectors (CAN communication line is open or shorted)
U1001*2 1001*2			

*1: **This self-diagnosis has the one trip detection logic.**
*2: **The MIL will not light up for this diagnosis.**

DTC Confirmation Procedure

ABS007IL

1. Turn ignition switch ON and wait at least 3 seconds.
2. Select “DATA MONITOR” mode with CONSULT-II.
3. If 1st trip DTC is detected, go to EC-864, "Diagnostic Procedure" .

Wiring Diagram

ABS007IM

EC-CAN-01

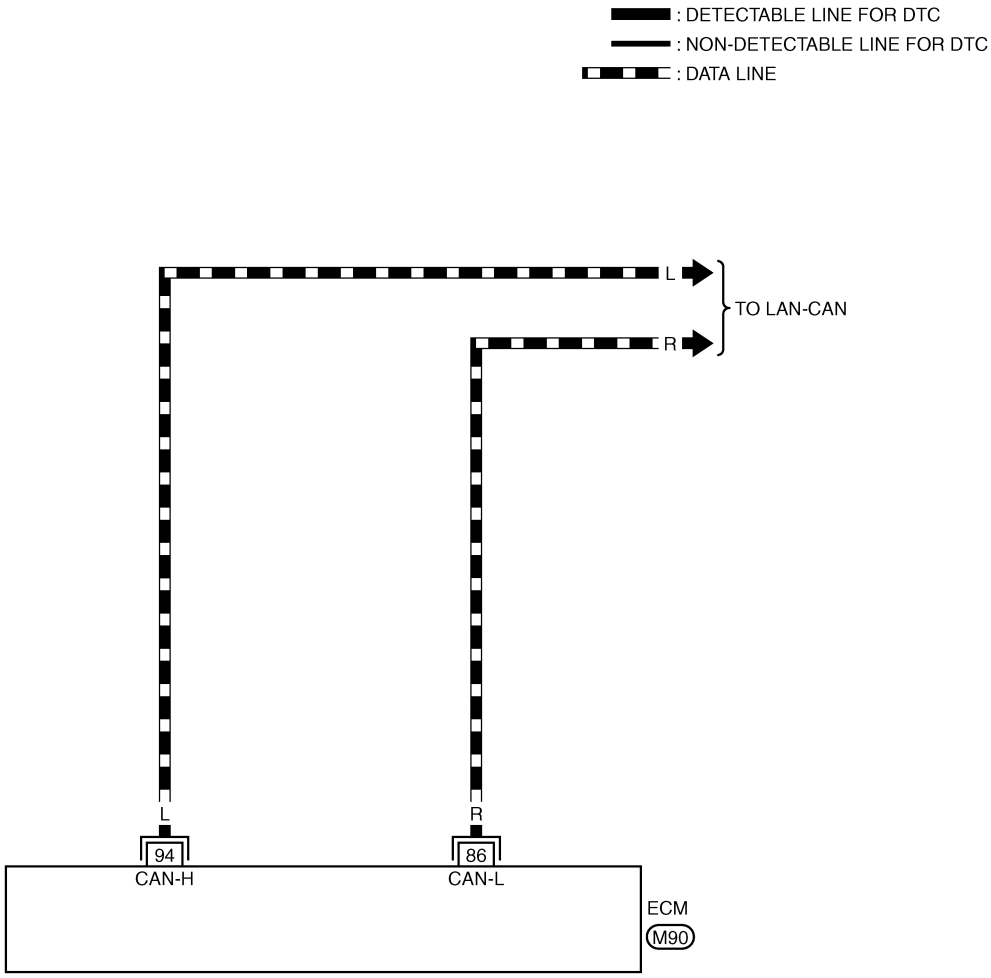

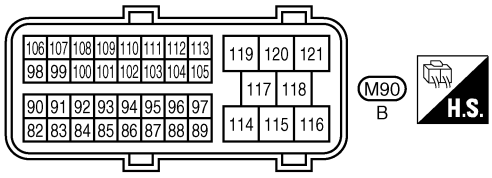

TBWM0218E

Diagnostic Procedure

ABS007IN

Go to LAN-5, "PRECAUTIONS" .

DTC P0011, P0021 IVT CONTROL

PFP:23796

Description

ABS007IO

SYSTEM DESCRIPTION

Sensor	Input signal to ECM function	ECM	Actuator
Crankshaft position sensor (POS) Camshaft position sensor (PHASE)	Engine speed	Intake valve timing control	Intake valve timing control solenoid valve
Intake valve timing control position sensor	Intake valve timing signal		
Engine coolant temperature sensor	Engine coolant temperature		
Wheel sensor*	Vehicle speed		

*: This signal is sent to the ECM through CAN communication line

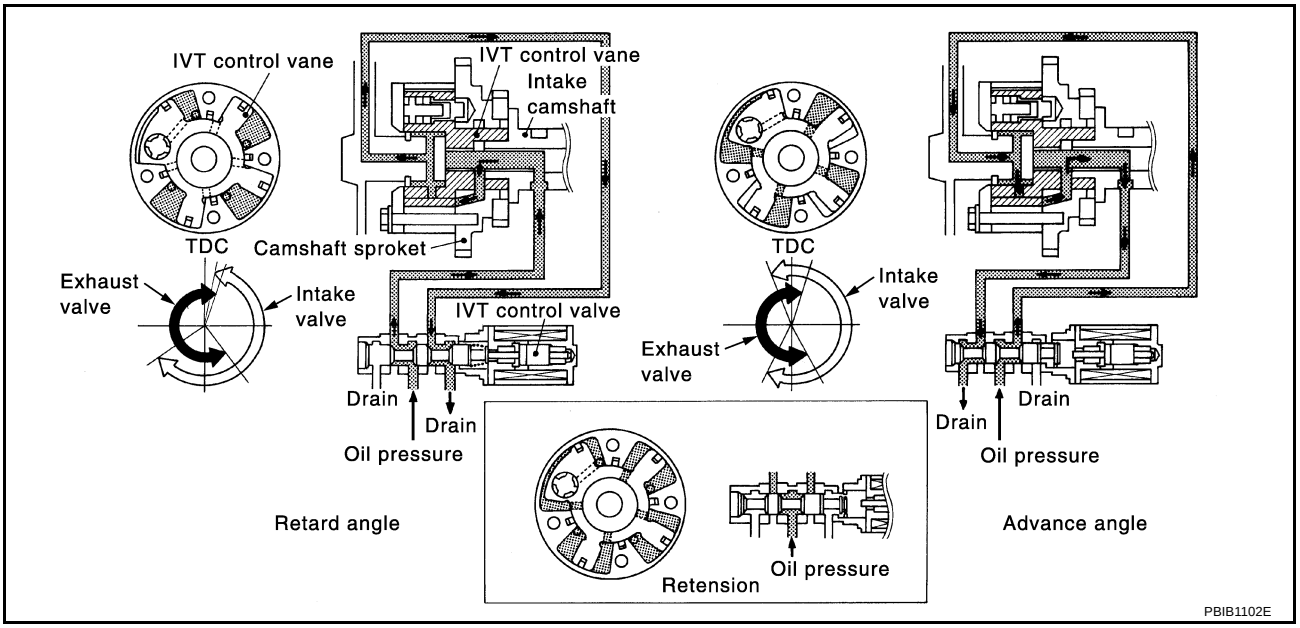

This mechanism hydraulically controls cam phases continuously with the fixed operating angle of the intake valve.

The ECM receives signals such as crankshaft position, camshaft position, engine speed, and engine coolant temperature. Then, the ECM sends ON/OFF pulse duty signals to the intake valve timing (IVT) control solenoid valve depending on driving status. This makes it possible to control the shut/open timing of the intake valve to increase engine torque in low/mid speed range and output in high-speed range.

COMPONENT INSPECTION

Intake Valve Timing Control Solenoid Valve

Intake Valve Timing (IVT) control solenoid valve is activated by ON/OFF pulse duty (ratio) signals from the ECM.

The IVT control solenoid valve changes the oil amount and direction of flow through intake valve timing control unit or stops oil flow.

The longer pulse width advances valve angle.

The shorter pulse width retards valve angle.

When ON and OFF pulse widths become equal, the solenoid valve stops oil pressure flow to fix the intake valve angle at the control position.

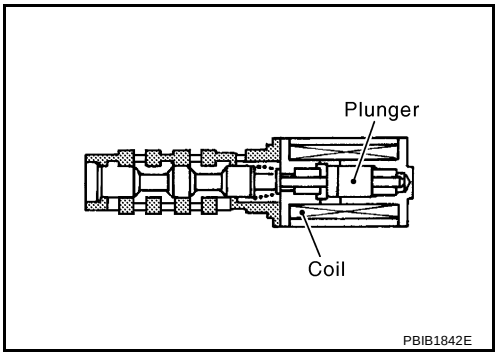

Intake Valve Timing Control Position Sensor

Intake valve timing control position sensors are located in the front of cylinder heads in both bank 1 and bank 2.
This sensor uses a Hall IC.
The cam position is determined by the intake primary cam sprocket concave (in three places). The ECM provides feedback to the intake valve timing control for appropriate target valve open-close timing according to drive conditions based on detected cam position.

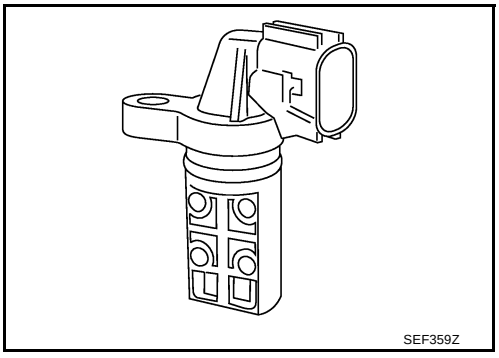

CONSULT-II Reference Value in Data Monitor Mode

ABS007IP

Specification data are reference values.

MONITOR ITEM	CONDITION		SPECIFICATION
INT/V TIM (B1) INT/V TIM (B2)	● Engine: After warming up ● Selector lever: P or N ● Air conditioner switch: OFF ● No load	Idle	–5° - 5°CA
		2,000 rpm	Approx. 0° - 20°CA
INT/V SOL (B1) INT/V SOL (B2)	● Engine: After warming up ● Selector lever: P or N ● Air conditioner switch: OFF ● No load	Idle	0% - 2%
		2,000 rpm	Approx. 25% - 50%

On Board Diagnosis Logic

ABS007IQ

DTC No.	Trouble diagnosis name	Detecting condition		Possible cause
P0011 0011 (Bank 1)	Intake valve timing control performance	A	The alignment of the intake valve timing control has been misresistered.	● Harness or connectors (Intake valve timing control solenoid valve circuit is open or shorted.) ● Harness or connectors (Intake valve timing control position sensor circuit is open or shorted.) ● Intake valve timing control solenoid valve ● Intake valve timing control position sensor ● Crankshaft position sensor (POS) ● Camshaft position sensor (PHASE) ● Accumulation of debris to the signal pick-up portion of the camshaft sprocket ● Timing chain installation ● Foreign matter caught in the oil groove for intake valve timing control
P0021 0021 (Bank 2)		B	There is a gap between angle of target and phase-control angle degree.	

FAIL-SAFE MODE

When the malfunction is detected, the ECM enters fail-safe mode.

Detected items	Engine operating condition in fail-safe mode
Intake valve timing control	The signal is not energized to the solenoid valve and the valve control does not function

DTC Confirmation Procedure

ABS007IR

CAUTION:
Always drive at a safe speed.

NOTE:
- **If DTC P0011 or P0021 is displayed with DTC P1111, P1136, P1140 or P1145, first perform the trouble diagnosis for EC-1141 or EC-1166 .**
- If DTC Confirmation Procedure has been previously conducted, always turn ignition switch OFF and wait at least 10 seconds before conducting the next test.

TESTING CONDITION:
Before performing the following procedure, confirm that battery voltage is between 10V and 16V at idle.

PROCEDURE FOR MALFUNCTION A

With CONSULT-II

1. Turn ignition switch ON.
2. Select “DATA MONITOR” mode with CONSULT-II.
3. Maintain the following conditions for at least 10 consecutive seconds.

ENG SPEED	More than 2,000 rpm (A constant rotation is maintained.)
COOLAN TEMP/S	More than 70°C (158°F)
Selector lever	1st or 2nd position
Driving location uphill	Driving vehicle uphill (Increased engine load will help maintain the driving conditions required for this test.)

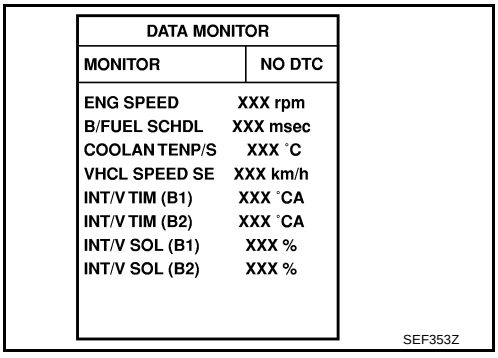

4. Maintain the following conditions for at least 20 consecutive seconds.

ENG SPEED	Idle
COOLAN TEMP/S	More than 70°C (158°F)
Selector lever	P or N position

5. If the 1st trip DTC is detected, go to EC-871, "Diagnostic Procedure" .

With GST

Follow the procedure “With CONSULT-II” above.

PROCEDURE FOR MALFUNCTION B

With CONSULT-II

1. Turn ignition switch ON.
2. Select “DATA MONITOR” mode with CONSULT-II.
3. Maintain the following conditions for at least 10 consecutive seconds.

ENG SPEED	1,700 - 3,175 rpm (A constant rotation is maintained.)
COOLAN TEMP/S	70 - 105°C (158 - 221°F)
Selector lever	1st or 2nd position
Driving location uphill	Driving vehicle uphill (Increased engine load will help maintain the driving conditions required for this test.)

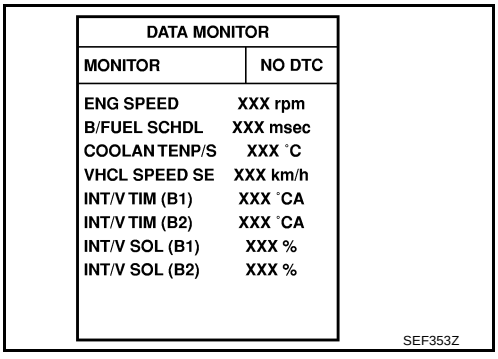

4. If the 1st trip DTC is detected, go to EC-871, "Diagnostic Procedure" .

With GST

Follow the procedure “With CONSULT-II” above.

Wiring Diagram
BANK 1

ABS007IS

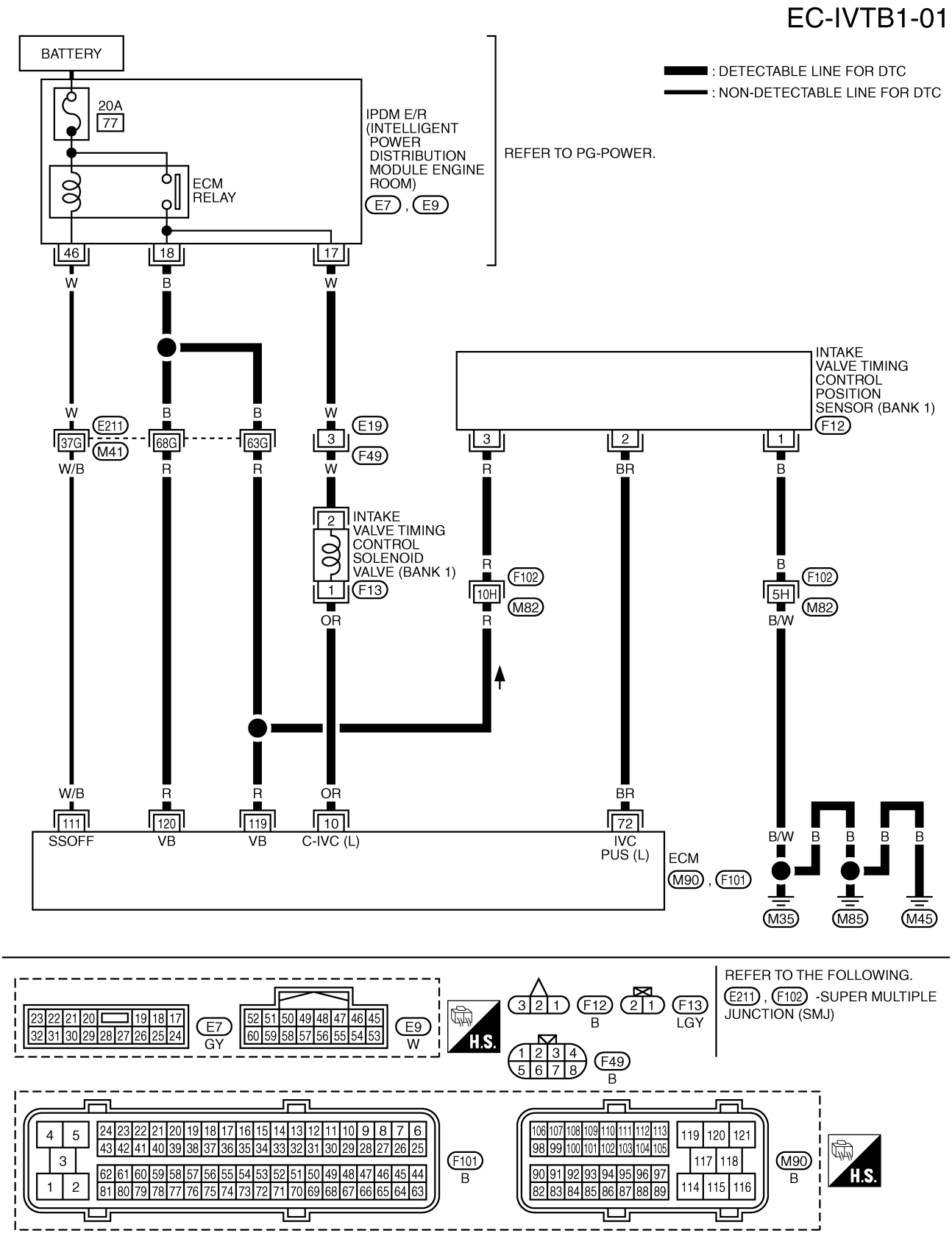

Specification data are reference values and are measured between each terminal and ground.
Pulse signal is measured by CONSULT-II.

CAUTION:
Do not use ECM ground terminals when measuring input/output voltage. Doing so may result in damage to the ECM's transistor. Use a ground other than ECM terminals, such as the ground.

TERMINAL NO.	WIRE COLOR	ITEM	CONDITION	DATA (DC Voltage)
10	OR	Intake valve timing control solenoid valve (bank 1)	**[Engine is running]** ● **Warm-up condition** ● Idle speed	BATTERY VOLTAGE (11 - 14V)
			[Engine is running] ● **Warm-up condition** ● Engine speed: 2,000rpm	7 - 12V★ 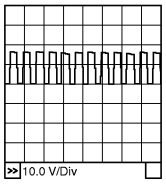 PBIB1790E
72	BR	Intake valve timing control position sensor (bank 1)	**[Engine is running]** ● **Warm-up condition** ● Idle speed	0 - 1.0V
			[Engine is running] ● Engine speed: 2,000rpm	0 - 1.0V★ 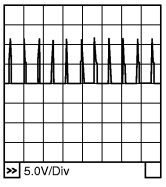 PBIB2046E

★: Average voltage for pulse signal (Actual pulse signal can be confirmed by oscilloscope.)

BANK 2

EC-IVTB2-01

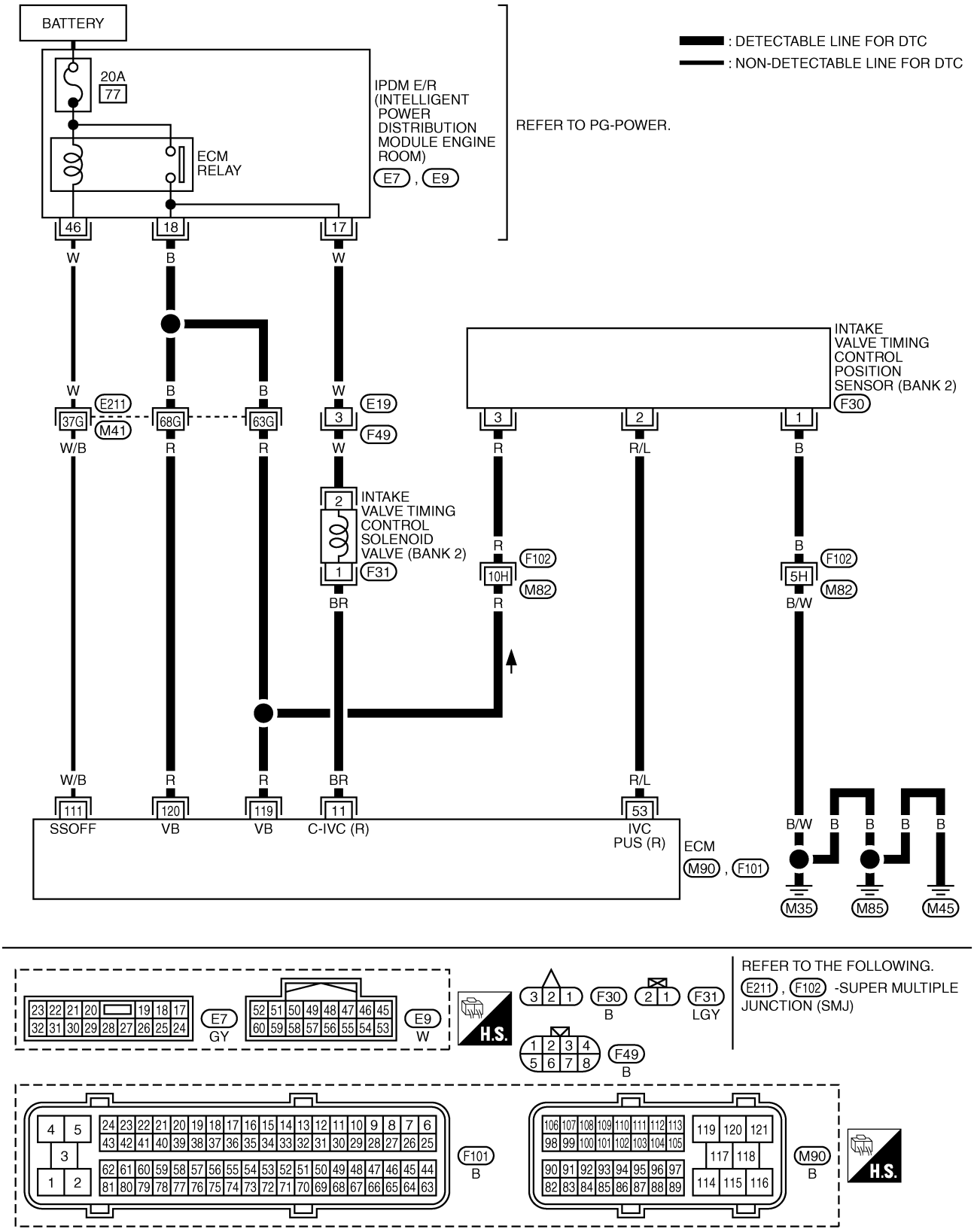

TBWM0846E

Specification data are reference values and are measured between each terminal and ground.
Pulse signal is measured by CONSULT-II.

CAUTION:
Do not use ECM ground terminals when measuring input/output voltage. Doing so may result in damage to the ECM's transistor. Use a ground other than ECM terminals, such as the ground.

TERMINAL NO.	WIRE COLOR	ITEM	CONDITION	DATA (DC Voltage)
11	BR	Intake valve timing control solenoid valve (bank 2)	**[Engine is running]** ● **Warm-up condition** ● Idle speed	BATTERY VOLTAGE (11 - 14V)
			[Engine is running] ● **Warm-up condition** ● Engine speed: 2,000rpm	7 - 12V★ 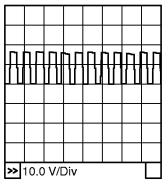 PBIB1790E
53	R/L	Intake valve timing control position sensor (bank 2)	**[Engine is running]** ● **Warm-up condition** ● Idle speed	0 - 1.0V
			[Engine is running] ● Engine speed: 2,000 rpm	0 - 1.0V★ 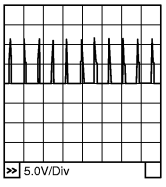 PBIB2046E

★: Average voltage for pulse signal (Actual pulse signal can be confirmed by oscilloscope.)

Diagnostic Procedure

ABS00E4Q

1. CHECK OIL PRESSURE WARNING LAMP

1. Start engine.
2. Check oil pressure warning lamp and confirm it is not illuminated.

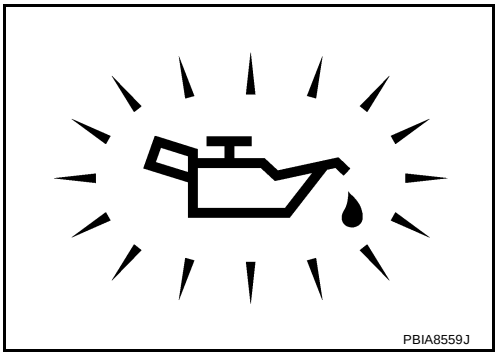

OK or NG

OK >> GO TO 2.
KG >> Go to LU-25, "OIL PRESSURE CHECK" .

2. CHECK GROUND CONNECTIONS

1. Turn ignition switch OFF.
2. Loosen and retighten three ground screws on the body.
   Refer to EC-861, "Ground Inspection" .

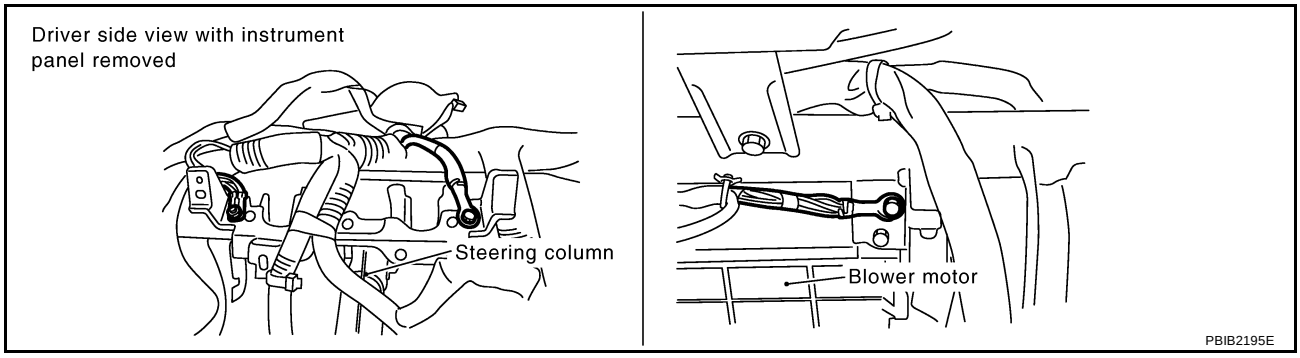

OK or NG

OK >> GO TO 3.
NG >> Repair or replace ground connections.

3. CHECK INTAKE VALVE TIMING CONTROL POSITION SENSOR POWER SUPPLY CIRCUIT

1. Disconnect intake valve timing control position sensor harness connector.

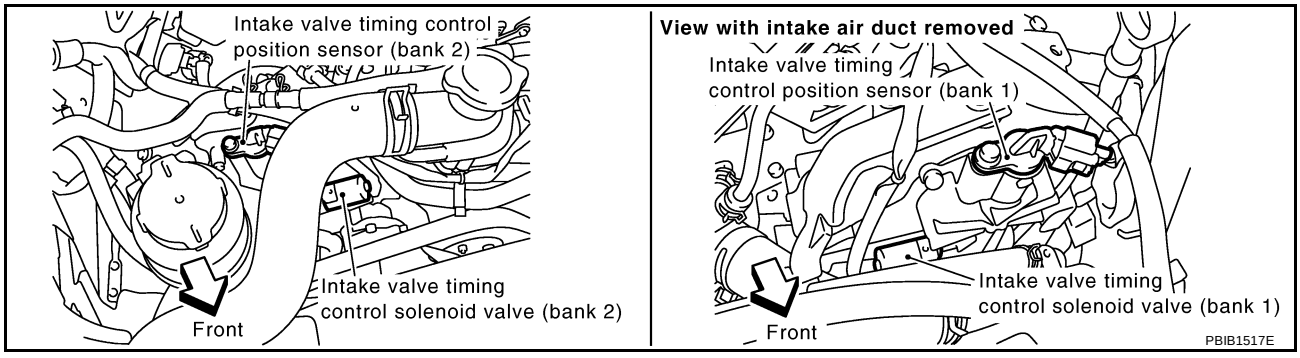

2. Turn ignition switch ON.
3. Check voltage between intake valve timing control position sensor terminal 3 and ground with CONSULT-II or tester.

   Voltage: Battery voltage

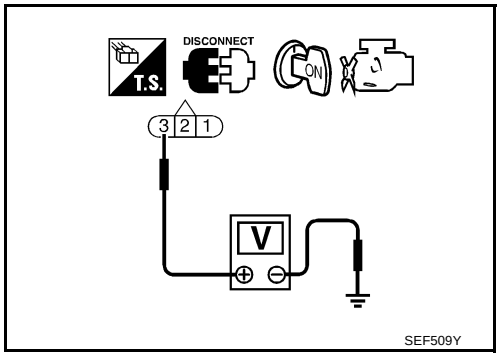

OK or NG

OK >> GO TO 5.
NG >> GO TO 4.

4. DETECT MALFUNCTIONING PART

Check the following.

- Harness connectors E211, M41
- Harness connectors F102, M82
- Harness for open or short between intake valve timing control position sensor and ECM
- Harness for open or short between intake valve timing control position sensor and IPDM E/R

>> Repair open circuit or short to ground or short to power in harness or connectors.

5. CHECK INTAKE VALVE TIMING CONTROL POSITION SENSOR GROUND CIRCUIT FOR OPEN AND SHORT

1. Turn ignition switch OFF.
2. Check harness continuity between intake valve timing control position sensor terminal 1 and ground. Refer to Wiring Diagram.

   Continuity should exist.

3. Also check harness for short to power.

OK or NG

OK >> GO TO 7.
NG >> GO TO 6.

6. DETECT MALFUNCTIONING PART

Check the following.

- Harness connectors F102, M82
- Harness for open or short between intake valve timing control position sensor and ground

>> Repair open circuit or short to power in harness or connectors.

7. CHECK INTAKE VALVE TIMING CONTROL POSITION SENSOR INPUT SIGNAL CIRCUIT FOR OPEN AND SHORT

1. Disconnect ECM harness connector.
2. Check harness continuity between the following;
   ECM terminal 72 and intake valve timing control position sensor (bank 1) terminal 2 or
   ECM terminal 53 and intake valve timing control position sensor (bank 2) terminal 2.
   Refer to Wiring Diagram.

   Continuity should exist.

3. Also check harness for short to ground and short to power.

OK or NG

OK >> GO TO 8.
NG >> Repair open circuit or short to ground or short to power in harness or connectors.

8. CHECK INTAKE VALVE TIMING CONTROL POSITION SENSOR

Refer to EC-875, "Component Inspection" .

OK or NG

OK >> GO TO 9.
NG >> Replace intake valve timing control position sensor.

9. CHECK INTAKE VALVE TIMING CONTROL SOLENOID VALVE POWER SUPPLY CIRCUIT

1. Reconnect ECM harness connector.
2. Disconnect intake valve timing control solenoid valve harness connector.

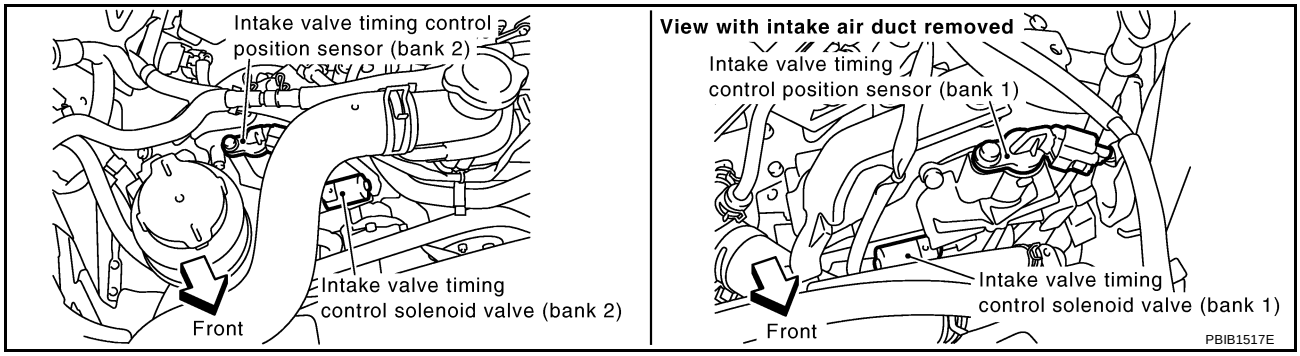

3. Turn ignition switch ON.
4. Check voltage between intake valve timing control solenoid valve terminal 2 and ground with CONSULT-II or tester.

Voltage: Battery voltage

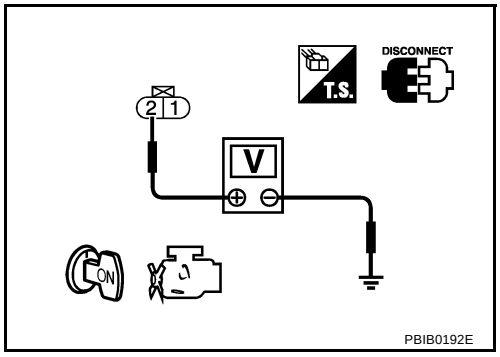

OK or NG

OK >> GO TO 11.
NG >> GO TO 10.

10. DETECT MALFUNCTIONING PART

Check the following.

- Harness connectors E19, F49
- Harness for open or short between intake valve timing control solenoid valve and IPDM E/R.

>> Repair open circuit or short to ground or short to power in harness or connectors.

11. CHECK INTAKE VALVE TIMING CONTROL SOLENOID VALVE OUTPUT SIGNAL CIRCUIT FOR OPEN AND SHORT

1. Disconnect ECM harness connector.
2. Check harness continuity between the following;
   ECM terminal 10 and intake valve timing control solenoid valve (bank 1) terminal 1 or
   ECM terminal 11 and intake valve timing control solenoid valve (bank 2) terminal 1.
   Refer to Wiring Diagram.

Continuity should exist.

3. Also check harness for short to ground and short to power.

OK or NG

OK >> GO TO 12.
NG >> Repair open circuit or short to ground or short to power in harness or connectors.

12. CHECK INTAKE VALVE TIMING CONTROL SOLENOID VALVE

Refer to EC-875, "Component Inspection" .

OK or NG

OK >> GO TO 13.
NG >> Replace intake valve timing control solenoid valve.

13. CHECK CRANKSHAFT POSITION SENSOR (POS)

Refer to EC-1042, "Component Inspection" .

OK or NG

OK >> GO TO 14.
NG >> Replace crankshaft position sensor (POS).

14. CHECK CAMSHAFT POSITION SENSOR (PHASE)

Refer to EC-1049, "Component Inspection" .

OK or NG

OK >> GO TO 15.
NG >> Replace camshaft position sensor (PHASE).

15. CHECK CAMSHAFT SPROCKET

Check accumulation of debris to the signal pick-up portion of the camshaft sprocket. Refer to EM-212, "CAMSHAFT" .

OK or NG

OK >> GO TO 16.
NG >> Remove debris and clean the signal pick-up cutout of camshaft sprocket.

16. CHECK TIMING CHAIN INSTALLATION

Check service records for any recent repairs that may cause timing chain misaligned.
Are there any service records that may cause timing chain misaligned?

Yes or No

Yes >> Check timing chain installation. Refer to EM-200, "TIMING CHAIN" .
No >> GO TO 17.

17. CHECK LUBRICATION CIRCUIT

Refer to EM-218, "Inspection of Camshaft Sprocket (INT) Oil Groove" .

OK or NG

OK >> GO TO 18.
NG >> Clean lubrication line.

18. CHECK INTERMITTENT INCIDENT

Refer to EC-854, "TROUBLE DIAGNOSIS FOR INTERMITTENT INCIDENT" .

>> **INSPECTION END**

Component Inspection

ABS007IU

INTAKE VALVE TIMING CONTROL POSITION SENSOR

1. Disconnect intake valve timing control position sensor harness connector.
2. Loosen the fixing bolt of the sensor.
3. Remove the sensor.

4. Visually check the sensor for chipping.

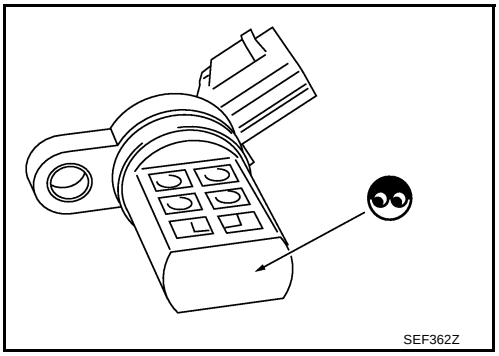

5. Check resistance as shown below.

Terminal No. (Polarity)	Resistance Ω [at 25°C (77°F)]
3 (+) - 1 (-)	Except 0 or ∞
2 (+) - 1 (-)	
3 (+) - 2 (-)	

6. If NG, replace intake valve timing control position sensor.

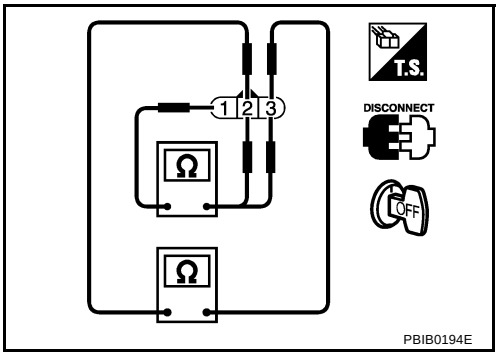

INTAKE VALVE TIMING CONTROL SOLENOID VALVE

1. Disconnect intake valve timing control solenoid valve harness connector.
2. Check resistance between intake valve timing control solenoid valve terminals as follows.

Terminals	Resistance
1 and 2	7.0 - 7.5Ω [at 20°C (68°F)]
1 or 2 and ground	∞Ω (Continuity should not exist)

If NG, replace intake valve timing control solenoid valve.
If OK, go to next step.

3. Remove intake valve timing control solenoid valve.

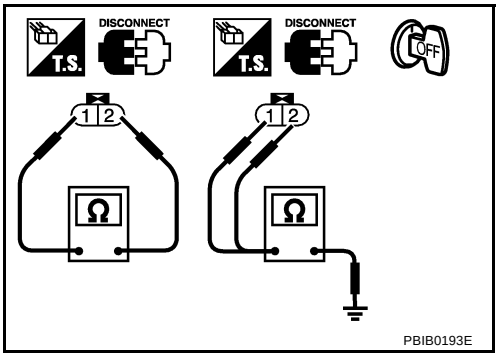

4. Provide 12V DC between intake valve timing control solenoid valve terminals and then interrupt it. Make sure that the plunger moves as shown in the figure.

CAUTION:
Do not apply 12V DC continuously for 5 seconds or more. Doing so may result in damage to the coil in intake valve timing control solenoid valve.
If NG, replace intake valve timing control solenoid valve.

NOTE:
Always replace O-ring when intake valve timing control solenoid valve is removed.

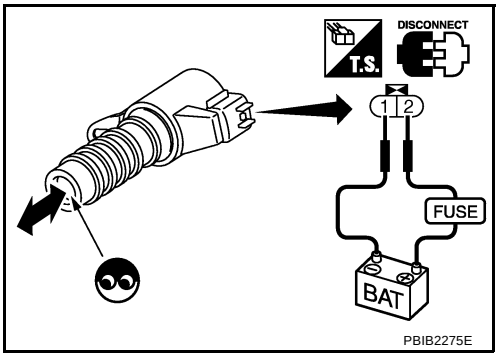

Removal and Installation

ABS007IV

INTAKE VALVE TIMING CONTROL POSITION SENSOR

Refer to EM-200, "TIMING CHAIN" .

INTAKE VALVE TIMING CONTROL SOLENOID VALVE

Refer to EM-200, "TIMING CHAIN" .

DTC P0031, P0032, P0051, P0052 HO2S1 HEATER

PFP:22690

Description

ABS007IW

SYSTEM DESCRIPTION

Sensor	Input signal to ECM	ECM function	Actuator
Camshaft position sensor (PHASE) Crankshaft position sensor (POS)	Engine speed	Heated oxygen sensor 1 heater control	Heated oxygen sensor 1 heater
Engine coolant temperature sensor	Engine coolant temperature		

The ECM performs ON/OFF control of the heated oxygen sensor 1 heater corresponding to the engine speed and engine coolant temperature. The duty percent varies with engine coolant temperature when engine is started.

OPERATION

Engine speed rpm	Heated oxygen sensor 1 heater
Above 3,000	OFF
Below 3,000 after warming up	ON

CONSULT-II Reference Value in Data Monitor Mode

ABS007IX

Specification data are reference values.

MONITOR ITEM	CONDITION	SPECIFICATION
HO2S1 HTR (B1) HO2S1 HTR (B2)	● Engine: After warming up ● Engine speed: Below 3,000 rpm	ON
	● Engine speed: Above 3,000 rpm	OFF

On Board Diagnosis Logic

ABS007IY

DTC No.	Trouble diagnosis name	DTC detecting condition	Possible cause
P0031 0031 (Bank 1) P0051 0051 (Bank 2)	Heated oxygen sensor 1 heater control circuit low	The current amperage in the heated oxygen sensor 1 heater circuit is out of the normal range. (An excessively low voltage signal is sent to ECM through the heated oxygen sensor 1 heater.)	● Harness or connectors (The heated oxygen sensor 1 heater circuit is open or shorted.) ● Heater oxygen sensor 1 heater
P0032 0032 (Bank 1) P0052 0052 (Bank 2)	Heated oxygen sensor 1 heater control circuit high	The current amperage in the heated oxygen sensor 1 heater circuit is out of the normal range. (An excessively high voltage signal is sent to ECM through the heated oxygen sensor 1 heater.)	● Harness or connectors (The heated oxygen sensor 1 heater circuit is shorted.) ● Heater oxygen sensor 1 heater

DTC Confirmation Procedure

ABS007IZ

NOTE:
If DTC Confirmation Procedure has been previously conducted, always turn ignition switch OFF and wait at least 10 seconds before conducting the next test.
TESTING CONDITION:
Before performing the following procedure, confirm that battery voltage is between 10.5V and 16V at idle.

WITH CONSULT-II

1. Start engine and warm it up to normal operating temperature.
2. Turn ignition switch OFF and wait at least 10 seconds.
3. Turn ignition switch ON and select “DATA MONITOR” mode with CONSULT-II.
4. Start engine and run it for at least 6 seconds at idle speed.
5. If 1st trip DTC is detected, go to EC-882, "Diagnostic Procedure".

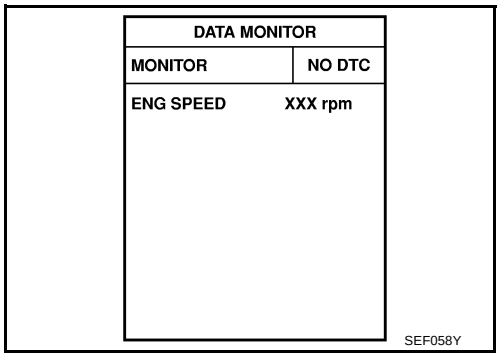

WITH GST

Follow the procedure “WITH CONSULT-II” above.

Wiring Diagram
BANK 1

ABS007J0

EC-O2H1B1-01

: DETECTABLE LINE FOR DTC
: NON-DETECTABLE LINE FOR DTC

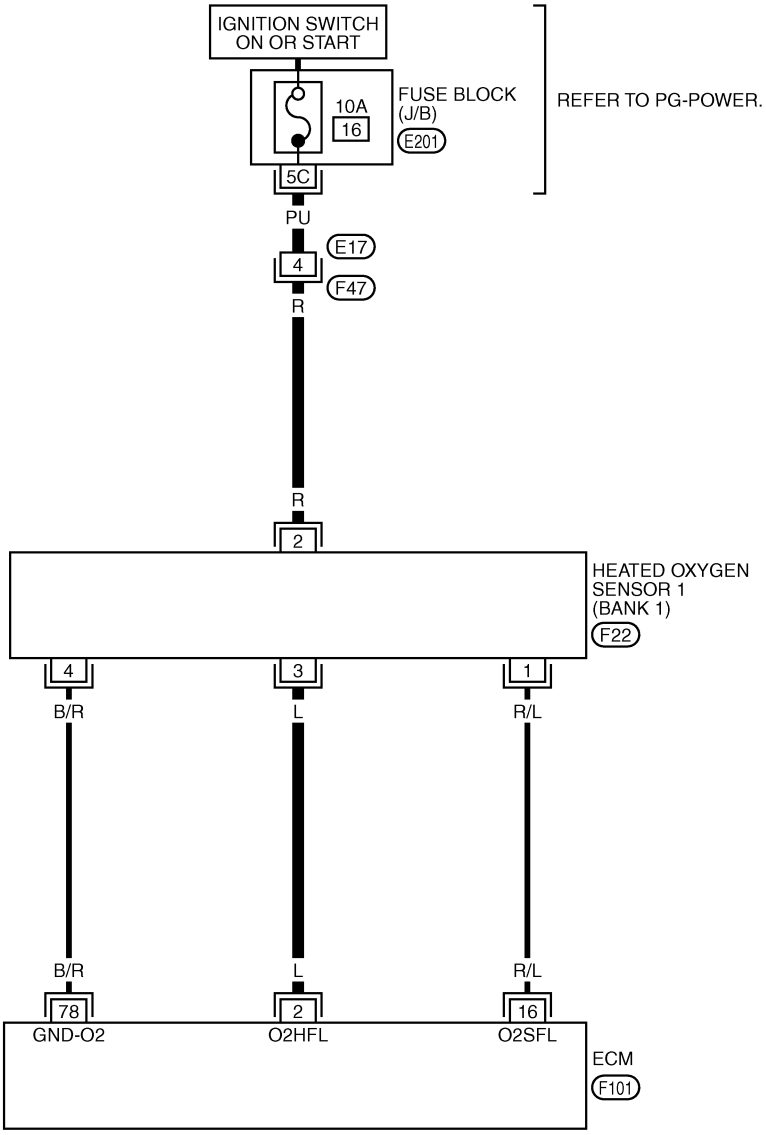

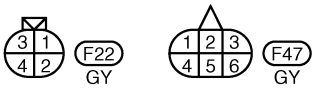

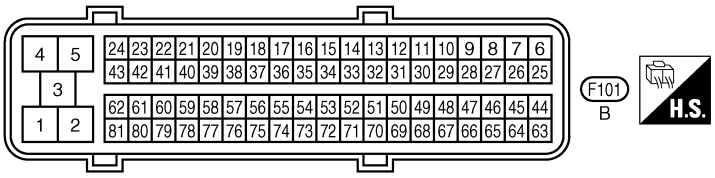

REFER TO THE FOLLOWING.
E201 -FUSE BLOCK-JUNCTION BOX (J/B)

TBWM0221E

Specification data are reference values and are measured between each terminal and ground.
Pulse signal is measured by CONSULT-II.

CAUTION:
Do not use ECM ground terminals when measuring input/output voltage. Doing so may result in damage to the ECM's transistor. Use a ground other than ECM terminals, such as the ground.

TERMINAL NO.	WIRE COLOR	ITEM	CONDITION	DATA (DC Voltage)
2	L	Heated oxygen sensor 1 heater (bank 1)	**[Engine is running]** ● **Warm-up condition** ● Engine speed: Below 3,000 rpm	Approximately 7V★ 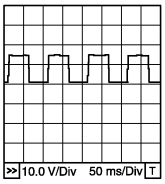 PBIB0519E
			[Engine is running] ● Engine speed: Above 3,000 rpm	BATTERY VOLTAGE (11 - 14V)

★: Average voltage for pulse signal (Actual pulse signal can be confirmed by oscilloscope.)

BANK 2

EC-O2H1B2-01

: DETECTABLE LINE FOR DTC
: NON-DETECTABLE LINE FOR DTC

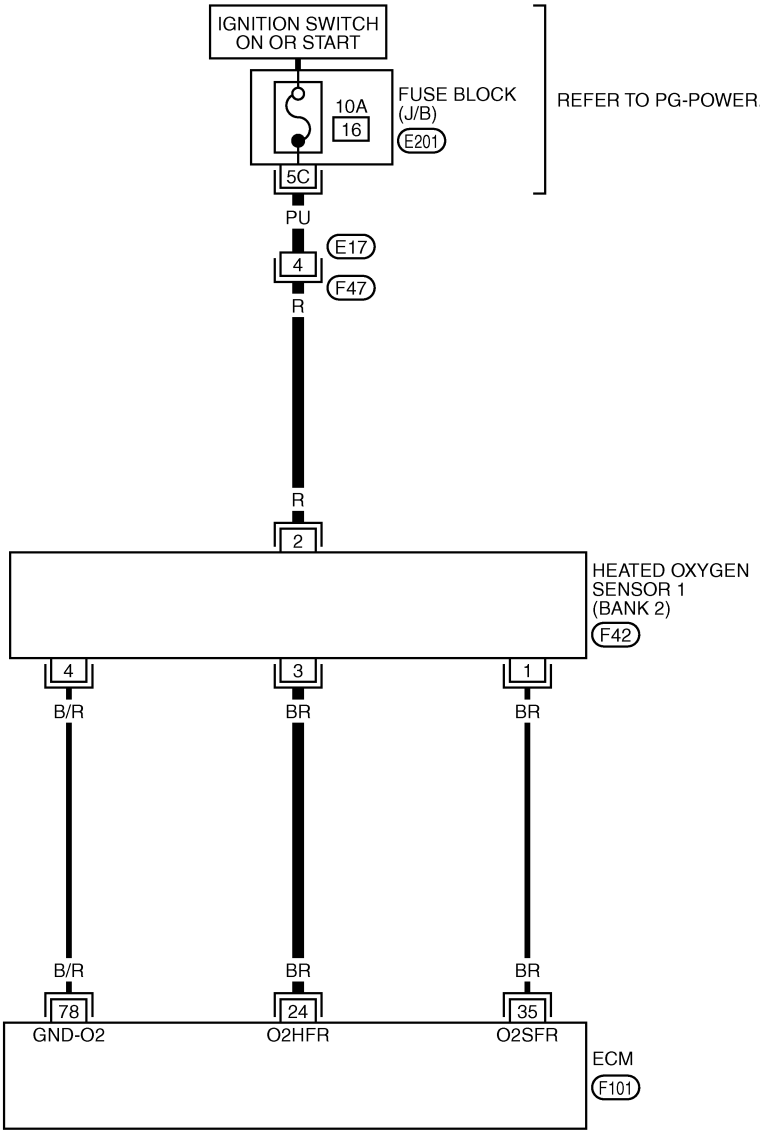

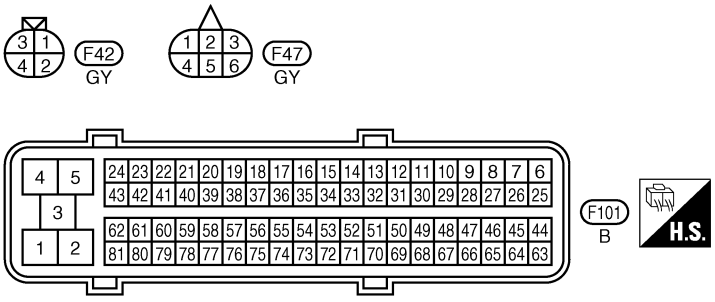

REFER TO THE FOLLOWING.
E201 -FUSE BLOCK-JUNCTION BOX (J/B)

TBWM0222E

Specification data are reference values and are measured between each terminal and ground.
Pulse signal is measured by CONSULT-II.

CAUTION:
Do not use ECM ground terminals when measuring input/output voltage. Doing so may result in damage to the ECM's transistor. Use a ground other than ECM terminals, such as the ground.

TERMINAL NO.	WIRE COLOR	ITEM	CONDITION	DATA (DC Voltage)
24	BR	Heated oxygen sensor 1 heater (bank 2)	**[Engine is running]** ● **Warm-up condition** ● Engine speed: Below 3,000 rpm	Approximately 7V★ 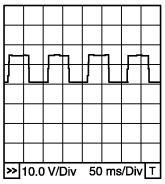 PBIB0519E
			[Engine is running] ● Engine speed: Above 3,000 rpm	BATTERY VOLTAGE (11 - 14V)

★: Average voltage for pulse signal (Actual pulse signal can be confirmed by oscilloscope.)

Diagnostic Procedure

ABS007J1

1. CHECK GROUND CONNECTIONS

1. Turn ignition switch OFF.
2. Loosen and retighten three ground screws on the body.
   Refer to EC-861, "Ground Inspection" .

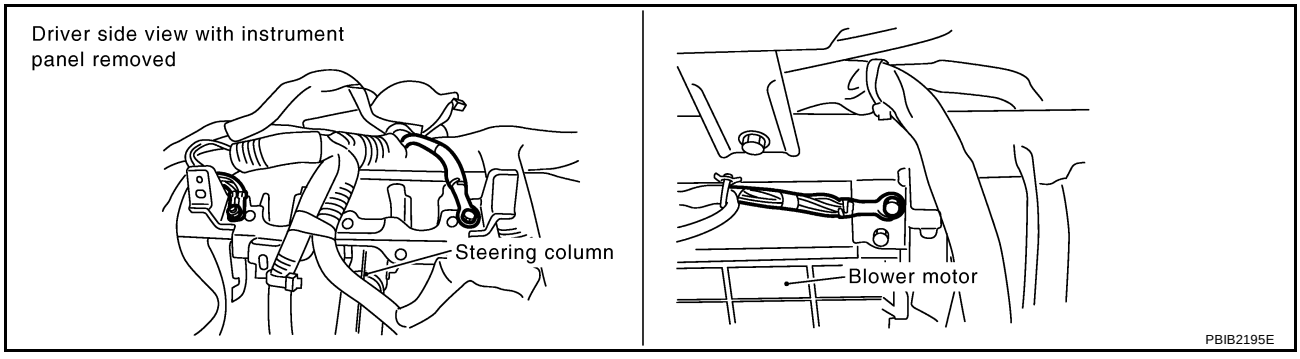

OK or NG

OK >> GO TO 2.
NG >> Repair or replace ground connections.

2. CHECK HO2S1 POWER SUPPLY CIRCUIT

1. Disconnect heated oxygen sensor 1 harness connector.

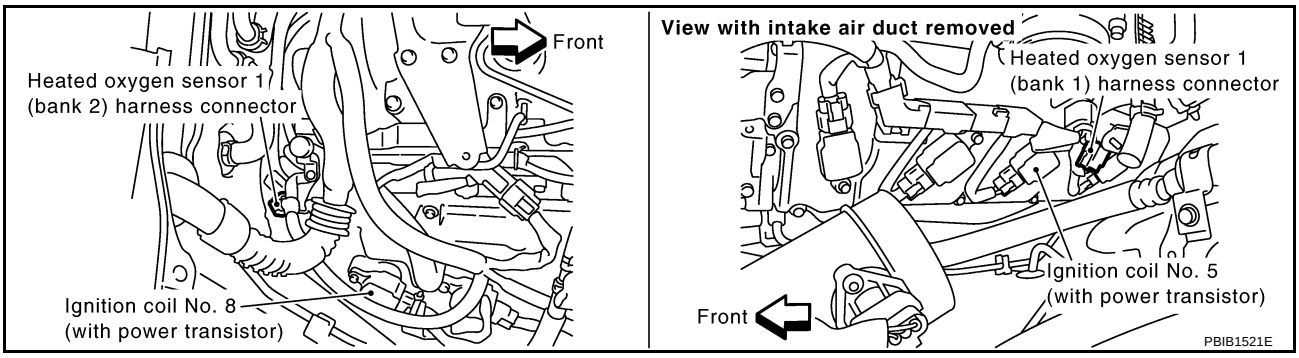

2. Turn ignition switch ON.
3. Check voltage between HO2S1 terminal 2 and ground with CONSULT-II or tester.

Voltage: Battery voltage

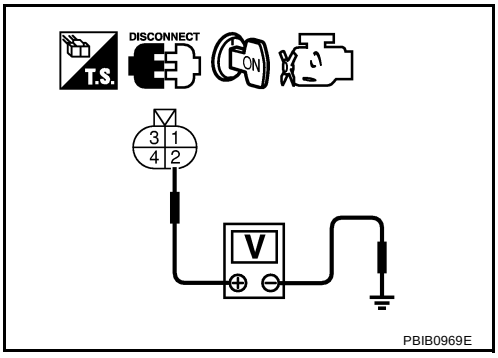

OK or NG

OK >> GO TO 4.
NG >> GO TO 3.

3. DETECT MALFUNCTIONING PART

Check the following.

- Harness connectors E17, F47
- Fuse block (J/B) connector E201
- 10A fuse
- Harness for open or short between heated oxygen sensor 1 and fuse

>> Repair open circuit or short to ground or short to power in harness or connectors.

4. CHECK HO2S1 OUTPUT SIGNAL CIRCUIT FOR OPEN AND SHORT

1. Turn ignition switch OFF.
2. Disconnect ECM harness connector.
3. Check harness continuity between ECM terminal and HO2S1 terminal as follows. Refer to Wiring Diagram.

DTC	Terminals		Bank
	ECM	Sensor	
P0031, P0032	2	3	1
P0051, P0052	24	3	2

Continuity should exist.

4. Also check harness for short to ground and short to power.

OK or NG

OK >> GO TO 5.
NG >> Repair open circuit or short to ground or short to power in harness or connectors.

5. CHECK HEATED OXYGEN SENSOR 1 HEATER

Refer to EC-884, "Component Inspection" .

OK or NG

OK >> GO TO 6.
NG >> Replace malfunctioning heated oxygen sensor 1.

6. CHECK INTERMITTENT INCIDENT

Refer to EC-854, "TROUBLE DIAGNOSIS FOR INTERMITTENT INCIDENT" .

>> **INSPECTION END**

Component Inspection

ABS007J2

HEATED OXYGEN SENSOR 1 HEATER

1. Check resistance between HO2S1 terminals as follows.

Terminal No.	Resistance
2 and 3	3.3 - 4.0 Ω at 25°C (77°F)
1 and 2, 3, 4	∞ Ω (Continuity should not exist)
4 and 1, 2, 3	

2. If NG, replace heated oxygen sensor 1.

CAUTION:

- **Discard any heated oxygen sensor which has been dropped from a height of more than 0.5 m (19.7 in) onto a hard surface such as a concrete floor; use a new one.**
- **Before installing new oxygen sensor, clean exhaust system threads using Oxygen Sensor Thread Cleaner tool J-43897-18 or J-43897-12 and approved anti-seize lubricant.**

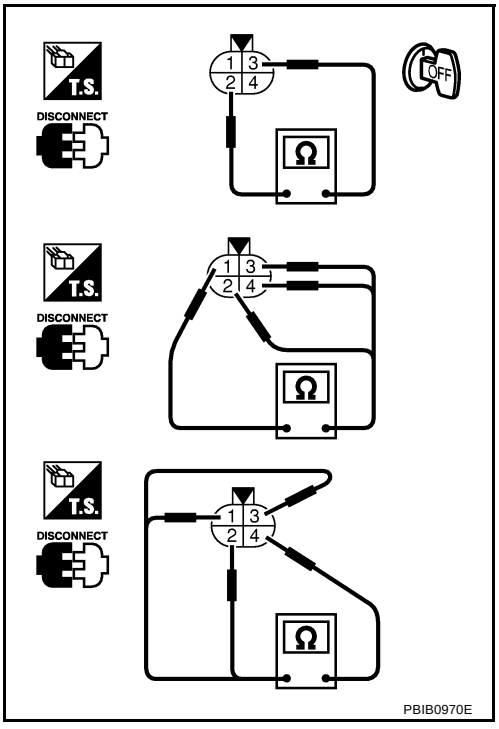

Removal and Installation

ABS007J3

HEATED OXYGEN SENSOR 1

Refer to EM-182, "EXHAUST MANIFOLD AND THREE WAY CATALYST" .

DTC P0037, P0038, P0057, P0058 HO2S2 HEATER

PFP:226A0

Description

ABS007J4

SYSTEM DESCRIPTION

Sensor	Input signal to ECM	ECM function	Actuator
Camshaft position sensor (PHASE) Crankshaft position sensor (POS)	Engine speed	Heated oxygen sensor 2 heater control	Heated oxygen sensor 2 heater
Engine coolant temperature sensor	Engine coolant temperature		
Mass air flow sensor	Amount of intake air		

The ECM performs ON/OFF control of the heated oxygen sensor 2 heater corresponding to the engine speed, amount of intake air and engine coolant temperature.

OPERATION

Engine speed rpm	Heated oxygen sensor 2 heater
Above 3,600	OFF
Below 3,600 rpm after the following conditions are met. ● Engine: After warming up ● Keeping the engine speed between 3,500 and 4,000 rpm for 1 minute and at idle for 1 minute under no load	ON

CONSULT-II Reference Value in Data Monitor Mode

ABS007J5

Specification data are reference values.

MONITOR ITEM	CONDITION	SPECIFICATION
HO2S2 HTR (B1) HO2S2 HTR (B2)	● Engine speed: Below 3,600 rpm after the following conditions are met. – Engine: After warming up – Keeping the engine speed between 3,500 and 4,000 rpm for 1 minute and at idle for 1 minute under no load	ON
	● Engine speed: Above 3,600 rpm	OFF

On Board Diagnosis Logic

ABS007J6

DTC No.	Trouble diagnosis name	DTC detecting condition	Possible cause
P0037 0037 (Bank 1)	Heated oxygen sensor 2 heater control circuit low	The current amperage in the heated oxygen sensor 2 heater circuit is out of the normal range. (An excessively low voltage signal is sent to ECM through the heated oxygen sensor 2 heater.)	● Harness or connectors (The heated oxygen sensor 2 heater circuit is open or shorted.) ● Heater oxygen sensor 2 heater
P0057 0057 (Bank 2)			
P0038 0038 (Bank 1)	Heated oxygen sensor 2 heater control circuit high	The current amperage in the heated oxygen sensor 2 heater circuit is out of the normal range. (An excessively high voltage signal is sent to ECM through the heated oxygen sensor 2 heater.)	● Harness or connectors (The heated oxygen sensor 2 heater circuit is shorted.) ● Heater oxygen sensor 2 heater
P0058 0058 (Bank 2)			

DTC Confirmation Procedure

ABS007J7

NOTE:
If DTC Confirmation Procedure has been previously conducted, always turn ignition switch OFF and wait at least 10 seconds before conducting the next test.

TESTING CONDITION:
Before performing the following procedure, confirm that battery voltage is between 10.5V and 16V at idle.

WITH CONSULT-II

1. Turn ignition switch ON and select “DATA MONITOR” mode with CONSULT-II.
2. Start engine and warm it up to the normal operating temperature.
3. Turn ignition switch OFF and wait at least 10 seconds.
4. Start the engine and keep the engine speed between 3,500 rpm and 4,000 rpm for at least 1 minute under no load.
5. Let engine idle for 1 minute.
6. If 1st trip DTC is detected, go to EC-890, "Diagnostic Procedure".

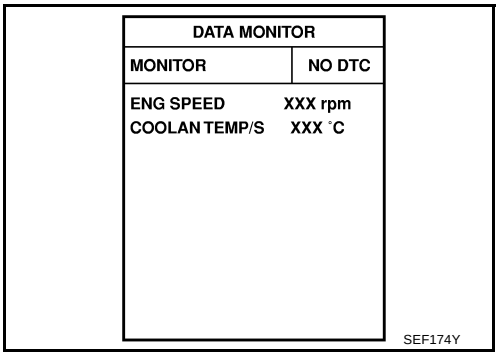

WITH GST

Follow the procedure “WITH CONSULT-II” above.

Wiring Diagram
BANK 1

ABS007J8

EC-O2H2B1-01

: DETECTABLE LINE FOR DTC
: NON-DETECTABLE LINE FOR DTC

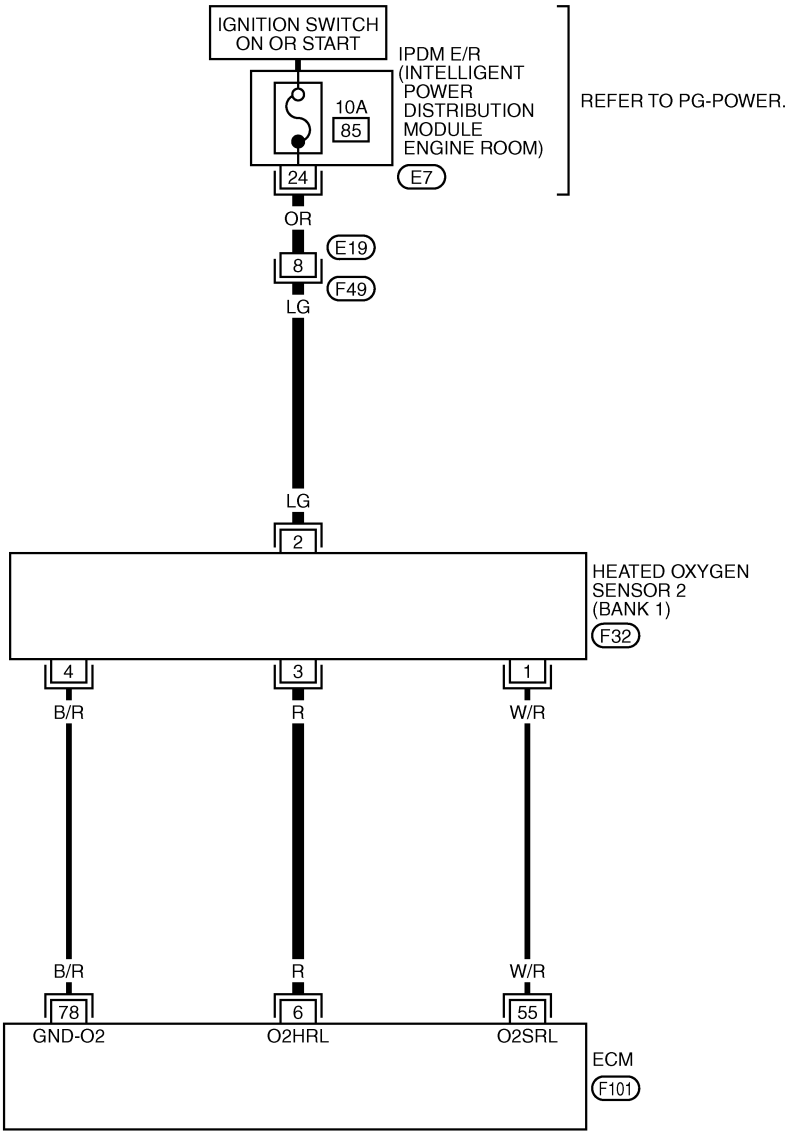

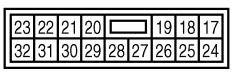

E7
GY

F32
GY

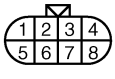

F49
B

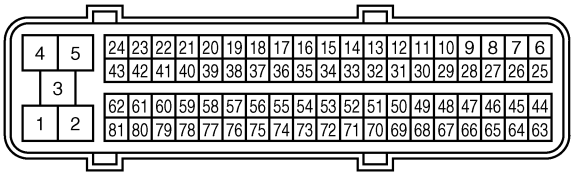

F101
B

TBWM0223E

Specification data are reference values and are measured between each terminal and ground.

CAUTION:

Do not use ECM ground terminals when measuring input/output voltage. Doing so may result in damage to the ECM's transistor. Use a ground other than ECM terminals, such as the ground.

TERMINAL NO.	WIRE COLOR	ITEM	CONDITION	DATA (DC Voltage)
6	R	Heated oxygen sensor 2 heater (bank 1)	**[Engine is running]** ● Engine speed: Below 3,600 rpm after the following conditions are met – Engine: after warming up – Keeping the engine speed between 3,500 and 4,000 rpm for 1 minute and at idle for 1 minute under no load	0 - 1.0V
			[Ignition switch: ON] ● Engine stopped **[Engine is running]** ● Engine speed: Above 3,600 rpm	BATTERY VOLTAGE (11 - 14V)

BANK 2

EC-O2H2B2-01

: DETECTABLE LINE FOR DTC
: NON-DETECTABLE LINE FOR DTC

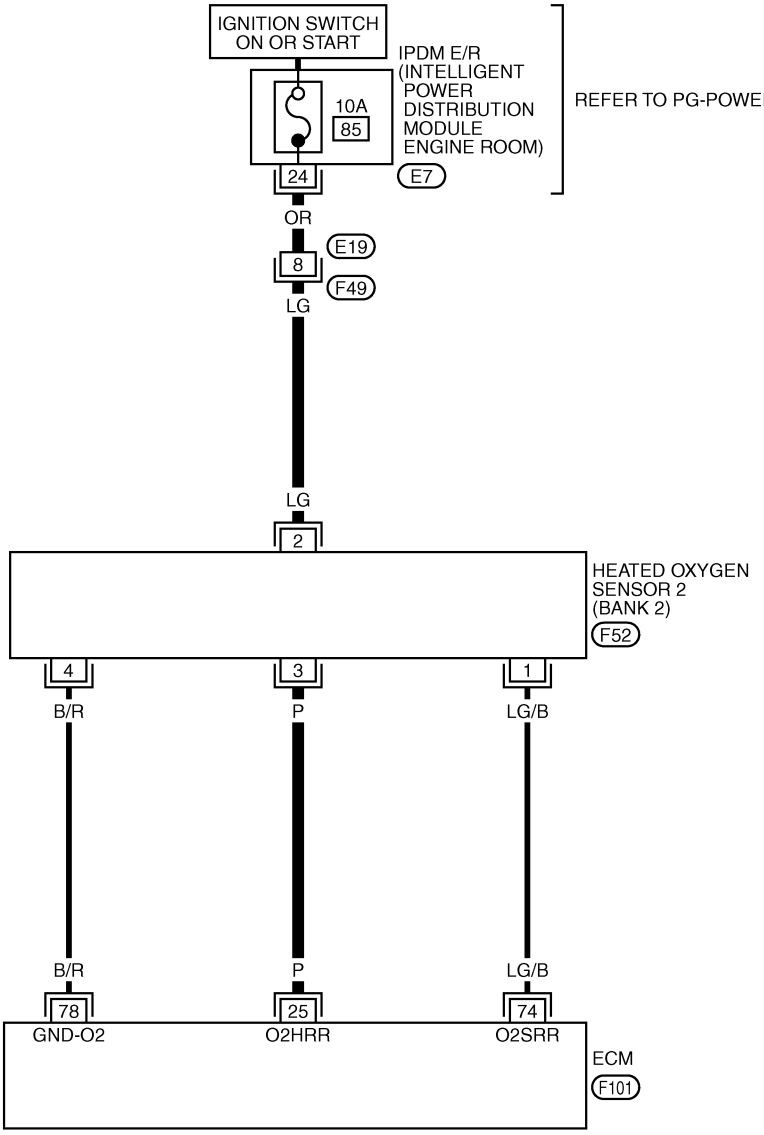

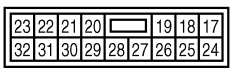

E7
GY

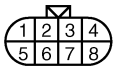

F49
B

F52
B

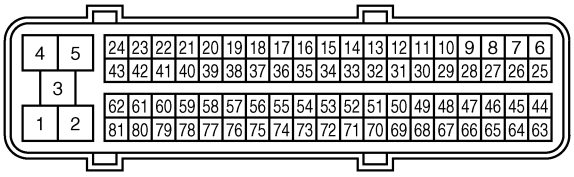

F101
B

TBWM0224E

CAUTION:
Do not use ECM ground terminals when measuring input/output voltage. Doing so may result in damage to the ECM's transistor. Use a ground other than ECM terminals, such as the ground.

TERMINAL NO.	WIRE COLOR	ITEM	CONDITION	DATA (DC Voltage)
25	P	Heated oxygen sensor 2 heater (bank 2)	**[Engine is running]** ● Engine speed: Below 3,600 rpm after the following conditions are met – Engine: after warming up – Keeping the engine speed between 3,500 and 4,000 rpm for 1 minute and at idle for 1 minute under no load	0 - 1.0V
			[Ignition switch: ON] ● Engine stopped **[Engine is running]** ● Engine speed: Above 3,600 rpm	BATTERY VOLTAGE (11 - 14V)

Diagnostic Procedure

ABS007J9

1. CHECK GROUND CONNECTIONS

1. Turn ignition switch OFF.
2. Loosen and retighten three ground screws on the body.
   Refer to EC-861, "Ground Inspection" .

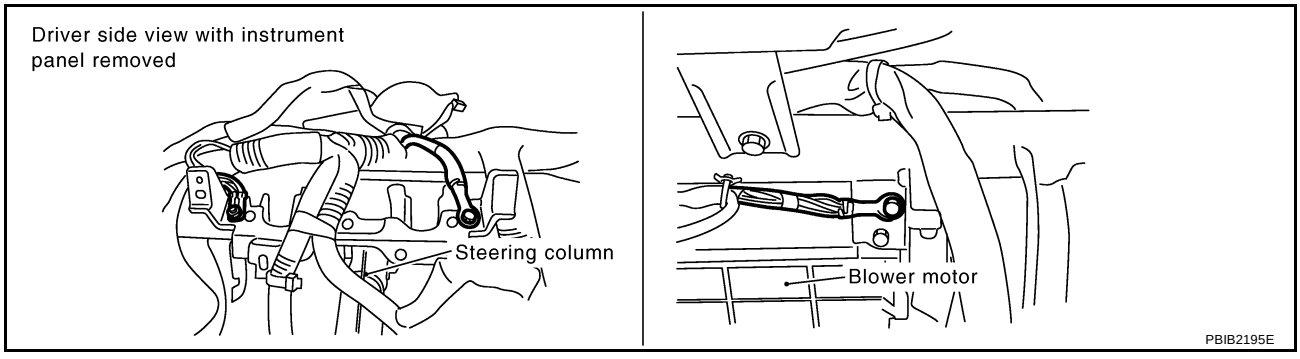

OK or NG

OK >> GO TO 2.
NG >> Repair or replace ground connections.

2. CHECK HO2S2 POWER SUPPLY CIRCUIT

1. Disconnect heated oxygen sensor 2 harness connector.

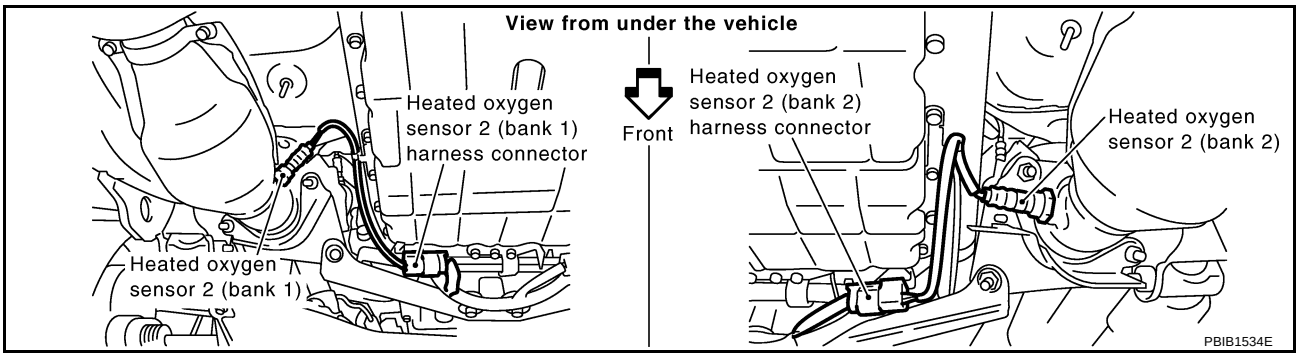

2. Turn ignition switch ON.
3. Check voltage between HO2S2 terminal 2 and ground with CONSULT-II or tester.

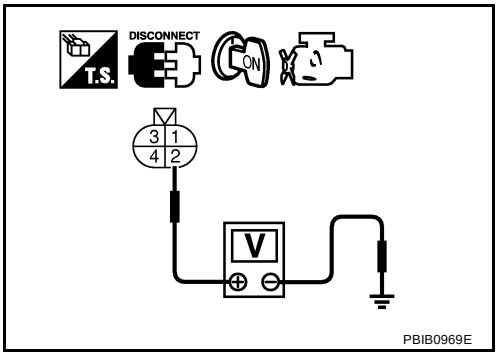

Voltage: Battery voltage

OK or NG

OK >> GO TO 4.
NG >> GO TO 3.

3. DETECT MALFUNCTIONING PART

Check the following.

- Harness connectors E19, F49
- IPDM E/R connector E7
- 10A fuse
- Harness for open or short between heated oxygen sensor 2 and fuse

>> Repair open circuit or short to ground or short to power in harness or connectors.

4. CHECK HO2S2 OUTPUT SIGNAL CIRCUIT FOR OPEN AND SHORT

1. Turn ignition switch OFF.
2. Disconnect ECM harness connector.
3. Check harness continuity between ECM terminal and HO2S2 terminal as follows. Refer to Wiring Diagram.

DTC	Terminals		Bank
	ECM	Sensor	
P0037, P0038	6	3	1
P0057, P0058	25	3	2

Continuity should exist.

4. Also check harness for short to ground and short to power.

OK or NG

OK >> GO TO 5.
NG >> Repair open circuit or short to ground or short to power in harness or connectors.

5. CHECK HEATED OXYGEN SENSOR 2 HEATER

Refer to EC-892, "Component Inspection" .

OK or NG

OK >> GO TO 6.
NG >> Replace malfunctioning heated oxygen sensor 2.

6. CHECK INTERMITTENT INCIDENT

Refer to EC-854, "TROUBLE DIAGNOSIS FOR INTERMITTENT INCIDENT" .

>> **INSPECTION END**

Component Inspection

ABS007JA

HEATED OXYGEN SENSOR 2 HEATER

1. Check resistance between HO2S2 terminals as follows.

Terminal No.	Resistance
2 and 3	5.0 - 7.0 Ω at 25°C (77°F)
1 and 2, 3, 4	∞ Ω (Continuity should not exist)
4 and 1, 2, 3	

2. If NG, replace heated oxygen sensor 2.

CAUTION:

- **Discard any heated oxygen sensor which has been dropped from a height of more than 0.5 m (19.7 in) onto a hard surface such as a concrete floor; use a new one.**
- **Before installing new oxygen sensor, clean exhaust system threads using Oxygen Sensor Thread Cleaner tool J-43897-18 or J-43897-12 and approved anti-seize lubricant.**

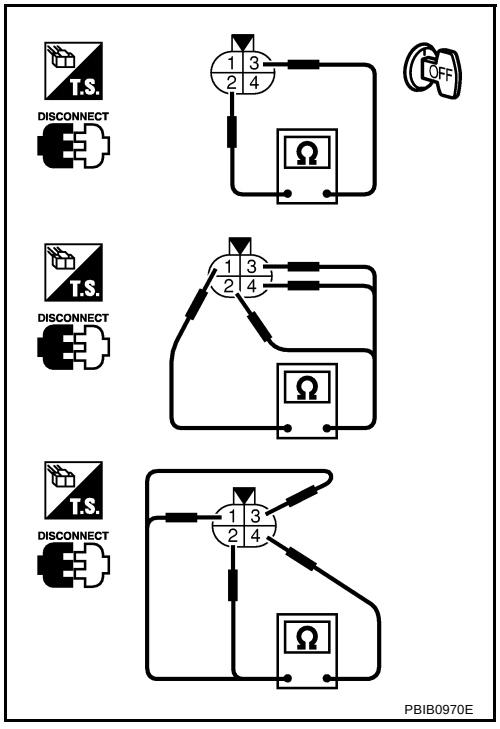

Removal and Installation

ABS007JB

HEATED OXYGEN SENSOR 2

Refer to EM-182, "EXHAUST MANIFOLD AND THREE WAY CATALYST" .

DTC P0101 MAF SENSOR

PFP:22680

Component Description

ABS00E4R

The mass air flow sensor is placed in the stream of intake air. It measures the intake flow rate by measuring a part of the entire intake flow. The mass air flow sensor controls the temperature of the hot wire to a certain amount. The heat generated by the hot wire is reduced as the intake air flows around it. The more air, the greater the heat loss.
Therefore, the electric current supplied to hot wire is changed to maintain the temperature of the hot wire as air flow increases. The ECM detects the air flow by means of this current change.

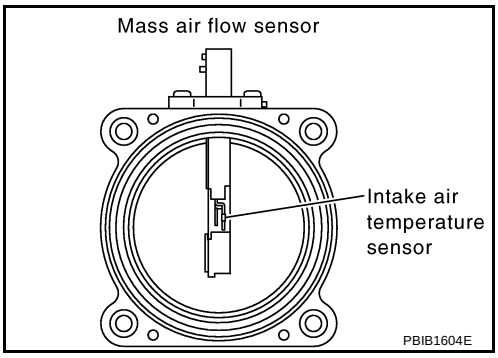

CONSULT-II Reference Value in Data Monitor Mode

ABS00E4S

Specification data are reference values.

MONITOR ITEM	CONDITION		SPECIFICATION
MAS A/F SE-B1	See EC-844, "TROUBLE DIAGNOSIS - SPECIFICATION VALUE" .		
CAL/LD VALUE	● Engine: After warming up ● Selector lever: P or N ● Air conditioner switch: OFF ● No load	Idle	14% - 33%
		2,500 rpm	12% - 25%
MASS AIRFLOW	● Engine: After warming up ● Selector lever: P or N ● Air conditioner switch: OFF ● No load	Idle	2.0 - 6.0 g·m/s
		2,500 rpm	7.0 - 20.0 g·m/s

On Board Diagnosis Logic

ABS00E4T

DTC No.	Trouble diagnosis name	DTC detecting condition		Possible cause
P0101 0101	Mass air flow sensor circuit range/performance problem	A)	A high voltage from the sensor is sent to ECM under light load driving condition.	● Harness or connectors (The sensor circuit is open or shorted.) ● Mass air flow sensor ● EVAP control system pressure sensor ● Intake air temperature sensor
		B)	A low voltage from the sensor is sent to ECM under heavy load driving condition.	● Harness or connectors (The sensor circuit is open or shorted.) ● Intake air leaks ● Mass air flow sensor ● EVAP control system pressure sensor ● Intake air temperature sensor

DTC Confirmation Procedure

ABS00E4U

Perform PROCEDURE FOR MALFUNCTION A first.
If DTC cannot be confirmed, perform PROCEDURE FOR MALFUNCTION B.

NOTE:
If DTC Confirmation Procedure has been previously conducted, always turn ignition switch OFF and wait at least 10 seconds before conducting the next test.

PROCEDURE FOR MALFUNCTION A

NOTE:
If engine will not start or stops soon, wait at least 10 seconds with engine stopped (Ignition switch ON) instead of running engine at idle speed.

With CONSULT-II

1. Turn ignition switch ON.
2. Select “DATA MONITOR” mode with CONSULT-II.
3. Start engine and warm it up to normal operating temperature.
4. Run engine for at least 10 seconds at idle speed.
5. If 1st trip DTC is detected, go to EC-897, "Diagnostic Procedure" .

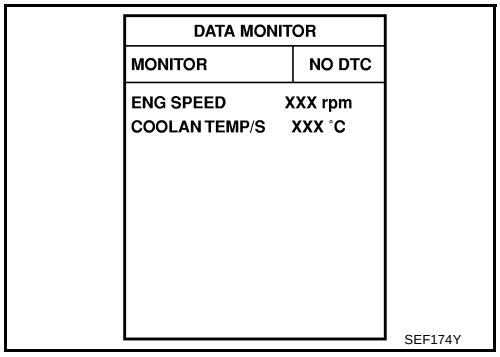

With GST

Follow the procedure “With CONSULT-II” above.

PROCEDURE FOR MALFUNCTION B

CAUTION:
Always drive vehicle at a safe speed.

With CONSULT-II

1. Turn ignition switch ON.
2. Start engine and warm it up to normal operating temperature.
   If engine cannot be started, go to EC-897, "Diagnostic Procedure" .
3. Select “DATA MONITOR” mode with CONSULT-II.
4. Check the voltage of “MAS A/F SE-B1” with “DATA MONITOR”.
5. Increases engine speed to about 4,000 rpm.
6. Monitor the linear voltage rise in response to engine speed increases.
   If NG, go to EC-897, "Diagnostic Procedure" .
   If OK, go to following step.

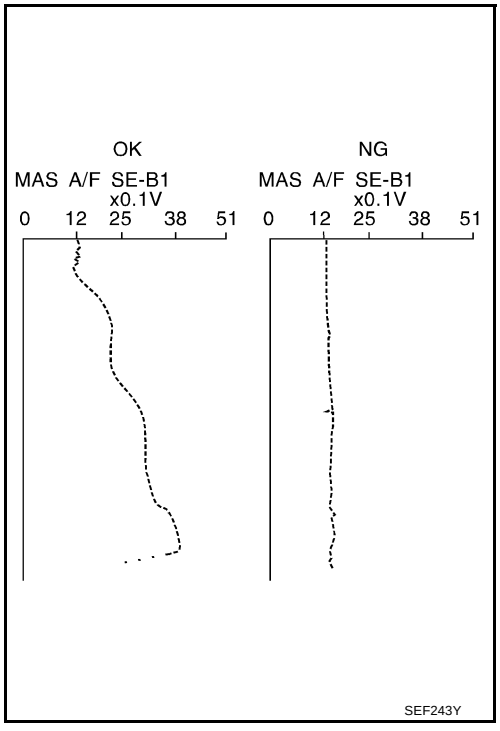

7. Maintain the following conditions for at least 10 consecutive seconds.

ENG SPEED	More than 2,000 rpm
THRTL SEN 1	More than 3V
THRTL SEN 2	More than 3V
Selector lever	Suitable position
Driving location	Driving vehicle uphill (Increased engine load) will help maintain the driving conditions required for this test.

8. If 1st trip DTC is detected, go to EC-897, "Diagnostic Procedure" .

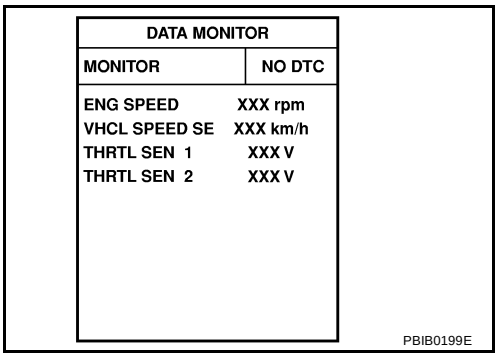

Overall Function Check

ABS00E4V

PROCEDURE FOR MALFUNCTION B

Use this procedure to check the overall function of the mass air flow sensor circuit. During this check, a DTC might not be confirmed.

With GST

1. Start engine and warm it up to normal operating temperature.
2. Select “Service $01” with GST.
3. Check the mass air flow sensor signal with “Service $01”.
4. Check for linear mass air flow sensor signal value rise in response to increases to about 4,000 rpm in engine speed.
5. If NG, go to EC-897, "Diagnostic Procedure" .

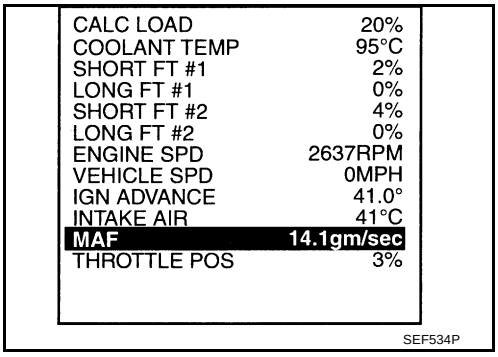

Wiring Diagram

ABS00E4W

EC-MAFS-01

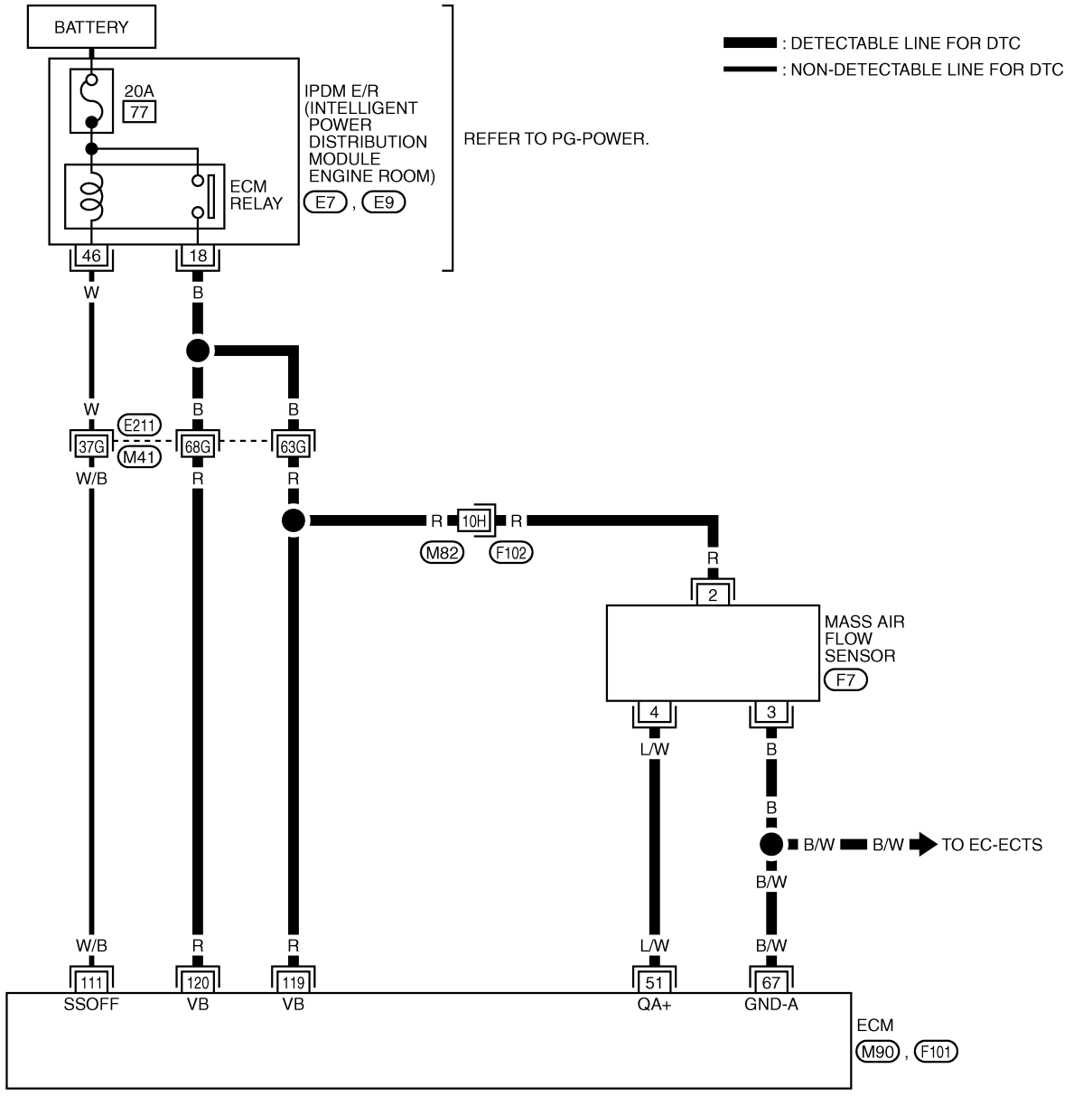

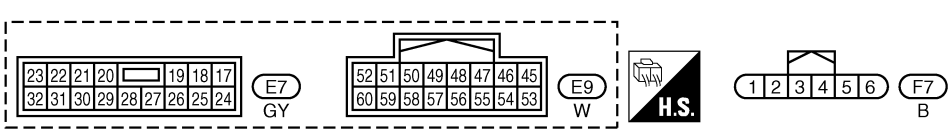

REFER TO THE FOLLOWING.
E211 , F102 -SUPER MULTIPLE JUNCTION (SMJ)

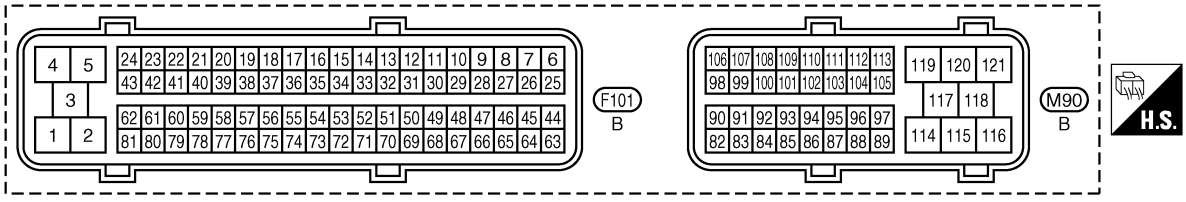

TBWM0722E

Specification data are reference values and are measured between each terminal and ground.

CAUTION:
Do not use ECM ground terminals when measuring input/output voltage. Doing so may result in damage to the ECM's transistor. Use a ground other than ECM terminals, such as the ground.

TERMINAL NO.	WIRE COLOR	ITEM	CONDITION	DATA (DC Voltage)
51	L/W	Mass air flow sensor	**[Engine is running]** ● **Warm-up condition** ● Idle speed	1.0 - 1.3V
			[Engine is running] ● **Warm-up condition** ● Engine speed: 2,500 rpm	1.6 - 2.0V
67	B/W	Sensor ground	**[Engine is running]** ● **Warm-up condition** ● Idle speed	Approximately 0V
111	W/B	ECM relay (Self shut-off)	**[Engine is running]** **[Ignition switch: OFF]** ● For a few seconds after turning ignition switch OFF	0 - 1.5V
			[Ignition switch: OFF] ● More than a few seconds after turning ignition switch OFF	BATTERY VOLTAGE (11 - 14V)
119 120	R R	Power supply for ECM	**[Ignition switch: ON]**	BATTERY VOLTAGE (11 - 14V)

Diagnostic Procedure

ABS00E4X

1. INSPECTION START

Which malfunction (A or B) is duplicated?

A or B

A >> GO TO 3.
B >> GO TO 2.

2. CHECK INTAKE SYSTEM

Check the following for connection.

- Air duct
- Vacuum hoses
- Intake air passage between air duct and intake manifold

OK or NG

OK >> GO TO 3.
NG >> Reconnect the parts.

3. CHECK GROUND CONNECTIONS

1. Turn ignition switch OFF.
2. Loosen and retighten three ground screws on the body.
   Refer to EC-861, "Ground Inspection" .

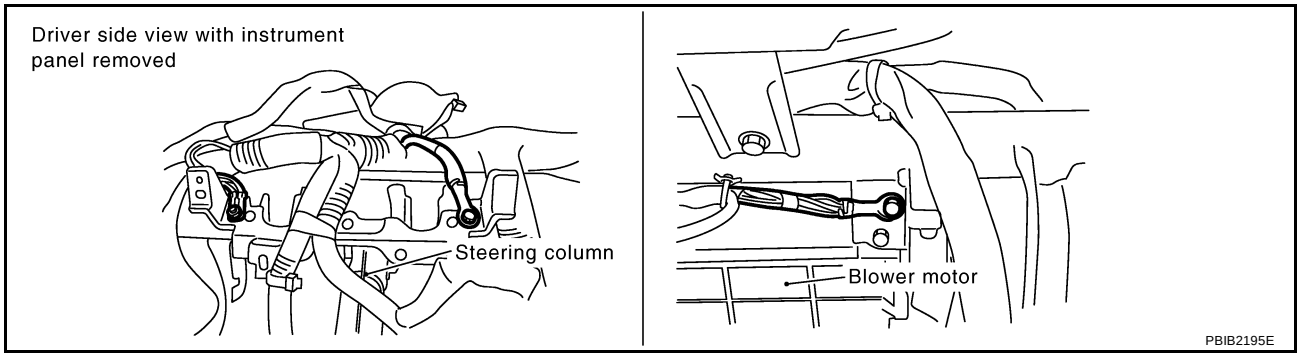

OK or NG

OK >> GO TO 4.
NG >> Repair or replace ground connections.

4. CHECK MAF SENSOR POWER SUPPLY CIRCUIT

1. Disconnect mass air flow (MAF) sensor harness connector.
2. Turn ignition switch ON.

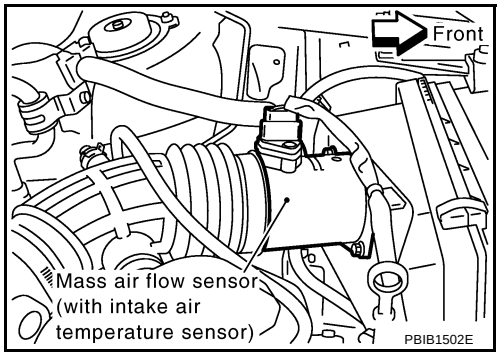

3. Check voltage between MAF sensor terminal 2 and ground with CONSULT-II or tester.

   Voltage: Battery voltage

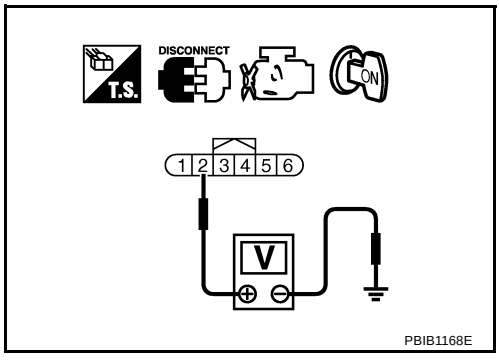

OK or NG

OK >> GO TO 6.
NG >> GO TO 5.

5. DETECT MALFUNCTIONING PART

Check the following.

- Harness connectors E211, M41
- Harness connectors M82, F102
- Harness for open or short between mass air flow sensor and ECM
- Harness for open or short between mass air flow sensor and IPDM E/R

>> Repair open circuit or short to ground or short to power in harness or connectors.

6. CHECK MAF SENSOR GROUND CIRCUIT FOR OPEN AND SHORT

1. Turn ignition switch OFF.
2. Disconnect ECM harness connector.
3. Check harness continuity between MAF sensor terminal 3 and ECM terminal 67.
   Refer to Wiring Diagram.

   Continuity should exist.

4. Also check harness for short to ground and short to power.

OK or NG

OK >> GO TO 7.
NG >> Repair open circuit or short to ground or short to power in harness or connectors.

7. CHECK MAF SENSOR INPUT SIGNAL CIRCUIT FOR OPEN AND SHORT

1. Check harness continuity between MAF sensor terminal 4 and ECM terminal 51.
   Refer to Wiring Diagram.

   Continuity should exist.

2. Also check harness for short to ground and short to power.

OK or NG

OK >> GO TO 8.
NG >> Repair open circuit or short to ground or short to power in harness or connectors.

8. CHECK INTAKE AIR TEMPERATURE SENSOR

Refer to EC-913, "Component Inspection" .

OK or NG

OK >> GO TO 9.
NG >> Replace intake air temperature sensor.

9. CHECK EVAP CONTROL SYSTEM PRESSURE SENSOR

Refer to EC-1085, "Component Inspection" .

OK or NG

OK >> GO TO 10.
NG >> Replace EVAP control system pressure sensor.

10. CHECK MASS AIR FLOW SENSOR

Refer to EC-900, "Component Inspection" .

OK or NG

OK >> GO TO 11.
NG >> Replace mass air flow sensor.

11. CHECK INTERMITTENT INCIDENT

Refer to EC-854, "TROUBLE DIAGNOSIS FOR INTERMITTENT INCIDENT" .

>> **INSPECTION END**

Component Inspection

ABS00E4Y

MASS AIR FLOW SENSOR

With CONSULT-II

1. Reconnect all harness connectors disconnected.
2. Start engine and warm it up to normal operating temperature.
3. Connect CONSULT-II and select “DATA MONITOR” mode.
4. Select “MAS A/F SE-B1” and check indication under the following conditions.

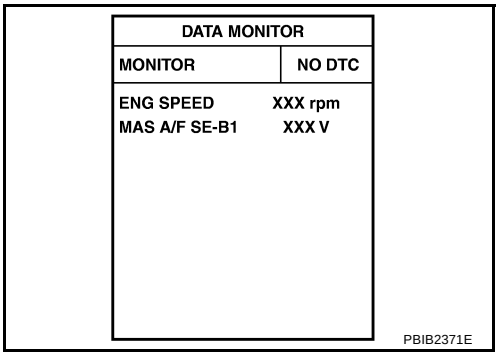

Condition	MAS A/F SE-B1 (V)
Ignition switch ON (Engine stopped.)	Approx. 0.4
Idle (Engine is warmed-up to normal operating temperature.)	1.0 - 1.3
2,500 rpm (Engine is warmed-up to normal operating temperature.)	1.6 - 2.0
Idle to about 4,000 rpm*	1.0 - 1.3 to Approx. 2.4

*: Check for linear voltage rise in response to engine being increased to about 4,000 rpm.

5. If the voltage is out of specification, proceed the following.

a. Check for the cause of uneven air flow through mass air flow sensor. Refer to following.
   - Crushed air ducts
   - Malfunctioning seal of air cleaner element
   - Uneven dirt of air cleaner element
   - Improper specification of intake air system parts

b. If NG, repair or replace malfunctioning part and perform step 2 to 4 again.
   If OK, go to next step.

6. Turn ignition switch OFF.
7. Disconnect mass air flow sensor harness connector and reconnect it again.
8. Perform step 2 to 4 again.
9. If NG, clean or replace mass air flow sensor.

Without CONSULT-II

1. Reconnect all harness connectors disconnected.
2. Start engine and warm it up to normal operating temperature.
3. Check voltage between ECM terminal 51 (Mass air flow sensor signal) and ground.

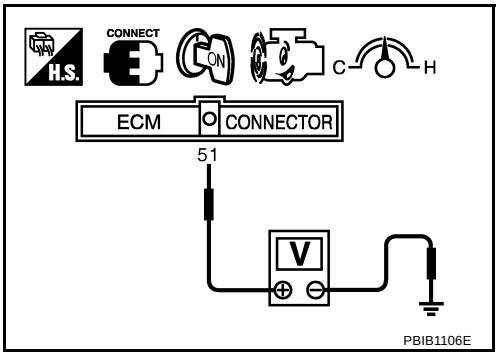

Condition	Voltage V
Ignition switch ON (Engine stopped.)	Approx. 0.4
Idle (Engine is warmed-up to normal operating temperature.)	1.0 - 1.3
2,500 rpm (Engine is warmed-up to normal operating temperature.)	1.6 - 2.0
Idle to about 4,000 rpm*	1.0 - 1.3 to Approx. 2.4

*: Check for linear voltage rise in response to engine being increased to about 4,000 rpm.

4. If the voltage is out of specification, proceed the following.

a. Check for the cause of uneven air flow through mass air flow sensor. Refer to following.
   - Crushed air ducts
   - Malfunctioning seal of air cleaner element
   - Uneven dirt of air cleaner element
   - Improper specification of intake air system parts

b. If NG, repair or replace malfunctioning part and perform step 2 to 3 again.
If OK, go to next step.
5. Turn ignition switch OFF.
6. Disconnect mass air flow sensor harness connector and reconnect it again.
7. Perform step 2 and 3 again.
8. If NG, clean or replace mass air flow sensor.

Removal and Installation

ABS007JK

MASS AIR FLOW SENSOR

Refer to EM-176, "AIR CLEANER AND AIR DUCT" .

DTC P0102, P0103 MAF SENSOR

PFP:22680

Component Description

ABS007JL

The mass air flow sensor is placed in the stream of intake air. It measures the intake flow rate by measuring a part of the entire intake flow. The mass air flow sensor controls the temperature of the hot wire to a certain amount. The heat generated by the hot wire is reduced as the intake air flows around it. The more air, the greater the heat loss.
Therefore, the electric current supplied to hot wire is changed to maintain the temperature of the hot wire as air flow increases. The ECM detects the air flow by means of this current change.

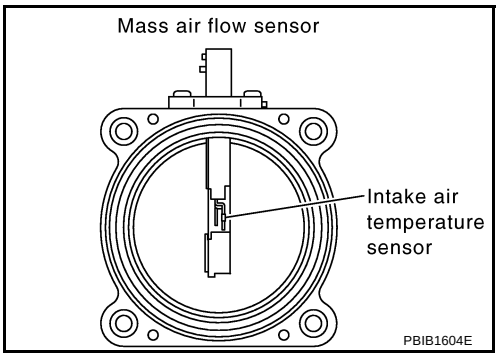

CONSULT-II Reference Value in Data Monitor Mode

ABS007JM

Specification data are reference values.

MONITOR ITEM	CONDITION		SPECIFICATION
MAS A/F SE-B1	See EC-844, "TROUBLE DIAGNOSIS - SPECIFICATION VALUE" .		
CAL/LD VALUE	● Engine: After warming up ● Selector lever: P or N ● Air conditioner switch: OFF ● No load	Idle	14% - 33%
		2,500 rpm	12% - 25%
MASS AIRFLOW	● Engine: After warming up ● Selector lever: P or N ● Air conditioner switch: OFF ● No load	Idle	2.0 - 6.0 g·m/s
		2,500 rpm	7.0 - 20.0 g·m/s

On Board Diagnosis Logic

ABS007JN

These self-diagnoses have the one trip detection logic.

DTC No.	Trouble diagnosis name	DTC detecting condition	Possible cause
P0102 0102	Mass air flow sensor circuit low input	An excessively low voltage from the sensor is sent to ECM.	● Harness or connectors (The sensor circuit is open or shorted.) ● Intake air leaks ● Mass air flow sensor
P0103 0103	Mass air flow sensor circuit high input	An excessively high voltage from the sensor is sent to ECM.	● Harness or connectors (The sensor circuit is open or shorted.) ● Mass air flow sensor

FAIL-SAFE MODE

When the malfunction is detected, the ECM enters fail-safe mode and the MIL lights up.

Detected items	Engine operating condition in fail-safe mode
Mass air flow sensor circuit	Engine speed will not rise more than 2,400 rpm due to the fuel cut.

DTC Confirmation Procedure

ABS007JO

NOTE:
If DTC Confirmation Procedure has been previously conducted, always turn ignition switch OFF and wait at least 10 seconds before conducting the next test.

PROCEDURE FOR DTC P0102

With CONSULT-II

1. Turn ignition switch ON.
2. Select “DATA MONITOR” mode with CONSULT-II.
3. Start engine and wait at least 5 seconds.
4. If DTC is detected, go to EC-905, "Diagnostic Procedure" .

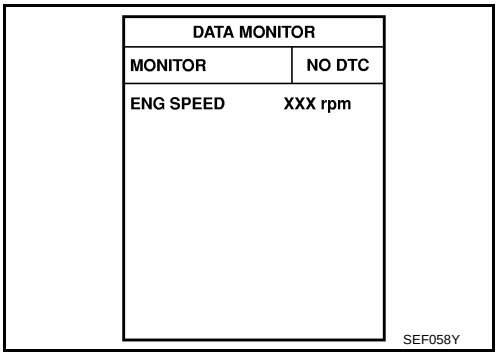

With GST

Follow the procedure “With CONSULT-II” above.

PROCEDURE FOR DTC P0103

With CONSULT-II

1. Turn ignition switch ON.
2. Select “DATA MONITOR” mode with CONSULT-II.
3. Wait at least 5 seconds.
4. If DTC is detected, go to EC-905, "Diagnostic Procedure" .
   If DTC is not detected, go to next step.
5. Start engine and wait at least 5 seconds.
6. If DTC is detected, go to EC-905, "Diagnostic Procedure" .

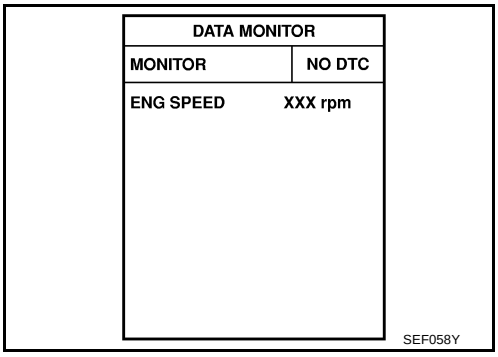

With GST

Follow the procedure “With CONSULT-II” above.

Wiring Diagram

ABS007JP

EC-MAFS-01

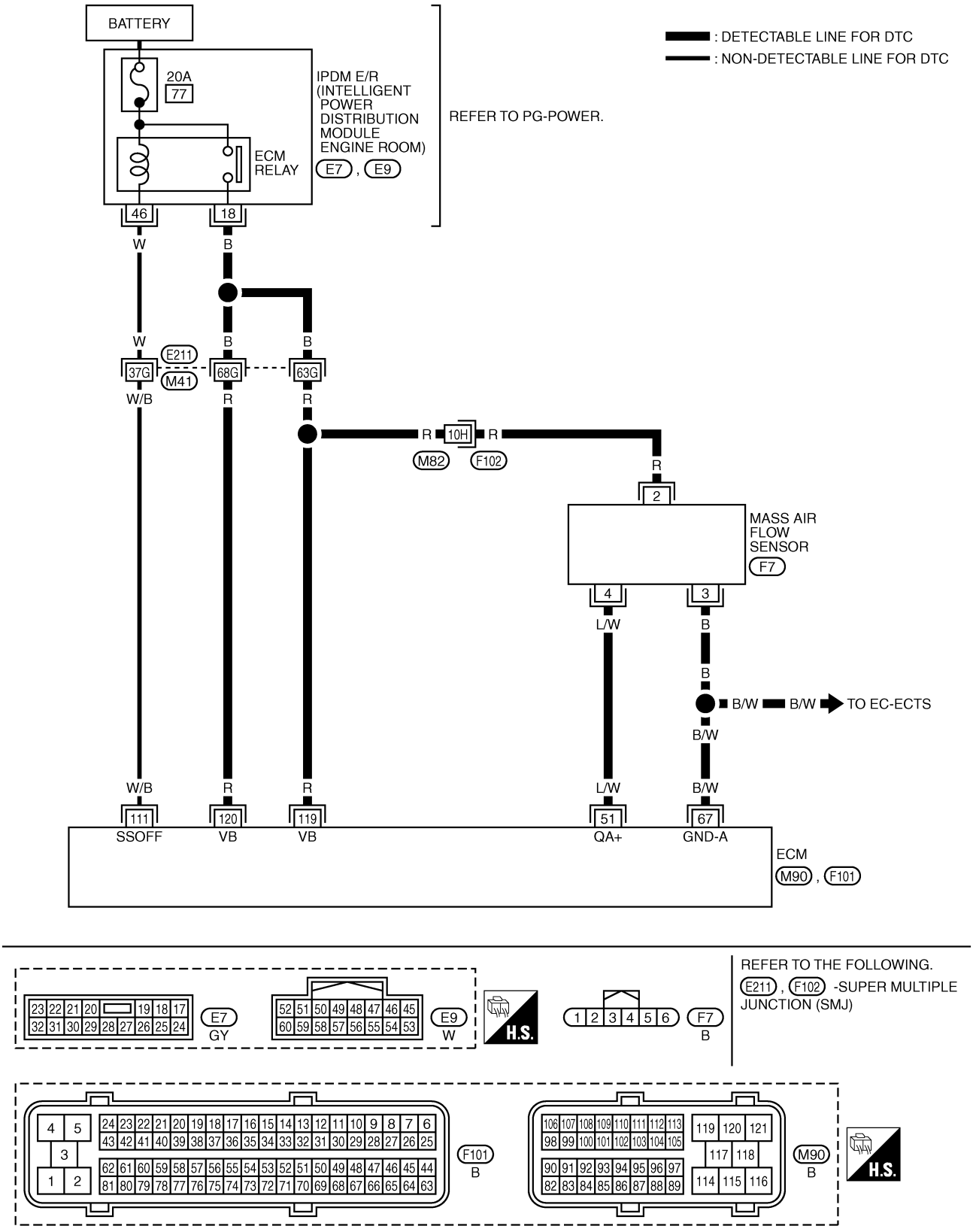

Specification data are reference values and are measured between each terminal and ground.

CAUTION:
Do not use ECM ground terminals when measuring input/output voltage. Doing so may result in damage to the ECM's transistor. Use a ground other than ECM terminals, such as the ground.

TERMINAL NO.	WIRE COLOR	ITEM	CONDITION	DATA (DC Voltage)
51	L/W	Mass air flow sensor	**[Engine is running]** ● **Warm-up condition** ● Idle speed	1.0 - 1.3V
			[Engine is running] ● **Warm-up condition** ● Engine speed: 2,500 rpm	1.6 - 2.0V
67	B/W	Sensor ground	**[Engine is running]** ● **Warm-up condition** ● Idle speed	Approximately 0V
111	W/B	ECM relay (Self shut-off)	**[Engine is running]** **[Ignition switch: OFF]** ● For a few seconds after turning ignition switch OFF	0 - 1.5V
			[Ignition switch: OFF] ● More than a few seconds after turning ignition switch OFF	BATTERY VOLTAGE (11 - 14V)
119 120	R R	Power supply for ECM	**[Ignition switch: ON]**	BATTERY VOLTAGE (11 - 14V)

Diagnostic Procedure

ABS007JQ

1. INSPECTION START

Which malfunction (P0102 or P0103) is duplicated?

P0102 or P0103

P0102 >> GO TO 2.
P0103 >> GO TO 3.

2. CHECK INTAKE SYSTEM

Check the following for connection.

- Air duct
- Vacuum hoses
- Intake air passage between air duct to intake manifold

OK or NG

OK >> GO TO 3.
NG >> Reconnect the parts.

3. CHECK GROUND CONNECTIONS

1. Turn ignition switch OFF.
2. Loosen and retighten three ground screws on the body.
   Refer to EC-861, "Ground Inspection" .

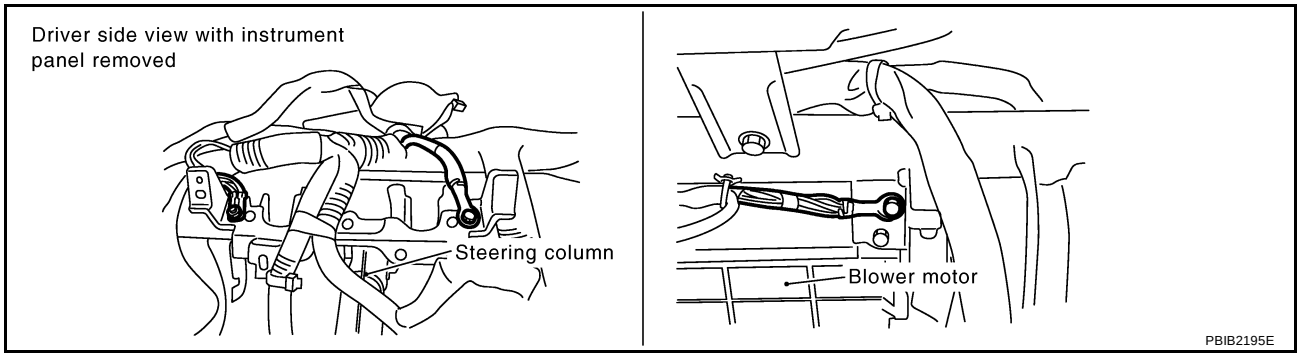

OK or NG

OK >> GO TO 4.
NG >> Repair or replace ground connections.

4. CHECK MAF SENSOR POWER SUPPLY CIRCUIT

1. Disconnect mass air flow (MAF) sensor harness connector.
2. Turn ignition switch ON.

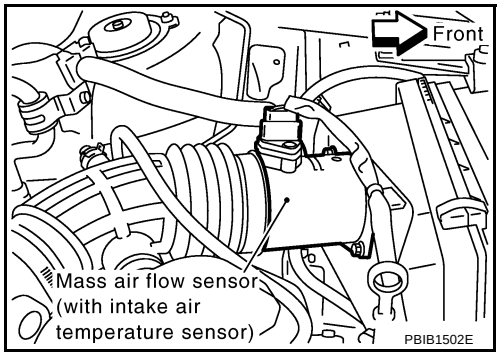

3. Check voltage between MAF sensor terminal 2 and ground with CONSULT-II or tester.

   Voltage: Battery voltage

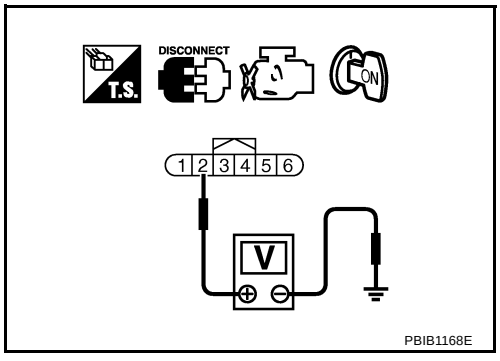

OK or NG

OK >> GO TO 6.
NG >> GO TO 5.

5. DETECT MALFUNCTIONING PART

Check the following.

- Harness connectors E211, M41
- Harness connectors M82, F102
- Harness for open or short between mass air flow sensor and ECM
- Harness for open or short between mass air flow sensor and IPDM E/R

>> Repair open circuit or short to ground or short to power in harness or connectors.

6. CHECK MAF SENSOR GROUND CIRCUIT FOR OPEN AND SHORT

1. Turn ignition switch OFF.
2. Disconnect ECM harness connector.
3. Check harness continuity between MAF sensor terminal 3 and ECM terminal 67.
   Refer to Wiring Diagram.

   Continuity should exist.

4. Also check harness for short to ground and short to power.

OK or NG

OK >> GO TO 7.
NG >> Repair open circuit or short to ground or short to power in harness or connectors.

7. CHECK MAF SENSOR INPUT SIGNAL CIRCUIT FOR OPEN AND SHORT

1. Check harness continuity between MAF sensor terminal 4 and ECM terminal 51.
   Refer to Wiring Diagram.

   Continuity should exist.

2. Also check harness for short to ground and short to power.

OK or NG

OK >> GO TO 8.
NG >> Repair open circuit or short to ground or short to power in harness or connectors.

8. CHECK MASS AIR FLOW SENSOR

Refer to EC-907, "Component Inspection" .

OK or NG

OK >> GO TO 9.
NG >> Replace mass air flow sensor.

9. CHECK INTERMITTENT INCIDENT

Refer to EC-854, "TROUBLE DIAGNOSIS FOR INTERMITTENT INCIDENT" .

>> **INSPECTION END**

Component Inspection

ABS00E4Z

MASS AIR FLOW SENSOR

With CONSULT-II

1. Reconnect all harness connectors disconnected.
2. Start engine and warm it up to normal operating temperature.
3. Connect CONSULT-II and select “DATA MONITOR” mode.
4. Select “MAS A/F SE-B1” and check indication under the following conditions.

Condition	MAS A/F SE-B1 (V)
Ignition switch ON (Engine stopped.)	Approx. 0.4
Idle (Engine is warmed-up to normal operating temperature.)	1.0 - 1.3
2,500 rpm (Engine is warmed-up to normal operating temperature.)	1.6 - 2.0
Idle to about 4,000 rpm*	1.0 - 1.3 to Approx. 2.4

*: Check for linear voltage rise in response to engine being increased to about 4,000 rpm.

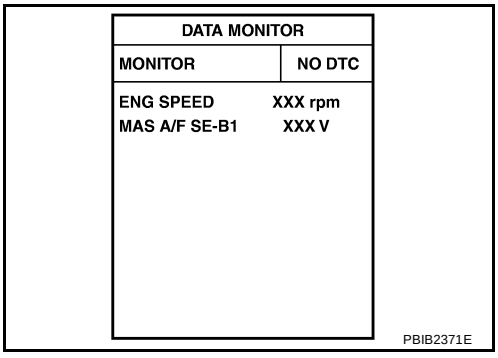

5. If the voltage is out of specification, proceed the following.

a. Check for the cause of uneven air flow through mass air flow sensor. Refer to following.
   - Crushed air ducts
   - Malfunctioning seal of air cleaner element
   - Uneven dirt of air cleaner element
   - Improper specification of intake air system parts

b. If NG, repair or replace malfunctioning part and perform step 2 to 4 again.
   If OK, go to next step.

6. Turn ignition switch OFF.
7. Disconnect mass air flow sensor harness connector and reconnect it again.
8. Perform step 2 to 4 again.
9. If NG, clean or replace mass air flow sensor.

Without CONSULT-II

1. Reconnect all harness connectors disconnected.
2. Start engine and warm it up to normal operating temperature.
3. Check voltage between ECM terminal 51 (Mass air flow sensor signal) and ground.

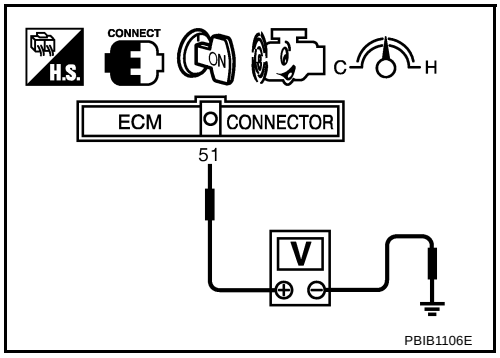

Condition	Voltage V
Ignition switch ON (Engine stopped.)	Approx. 0.4
Idle (Engine is warmed-up to normal operating temperature.)	1.0 - 1.3
2,500 rpm (Engine is warmed-up to normal operating temperature.)	1.6 - 2.0
Idle to about 4,000 rpm*	1.0 - 1.3 to Approx. 2.4

*: Check for linear voltage rise in response to engine being increased to about 4,000 rpm.

4. If the voltage is out of specification, proceed the following.

a. Check for the cause of uneven air flow through mass air flow sensor. Refer to following.
   - Crushed air ducts
   - Malfunctioning seal of air cleaner element
   - Uneven dirt of air cleaner element
   - Improper specification of intake air system parts

b. If NG, repair or replace malfunctioning part and perform step 2 to 3 again.
   If OK, go to next step.

5. Turn ignition switch OFF.
6. Disconnect mass air flow sensor harness connector and reconnect it again.
7. Perform step 2 and 3 again.
8. If NG, clean or replace mass air flow sensor.

Removal and Installation

ABS007JS

MASS AIR FLOW SENSOR

Refer to EM-176, "AIR CLEANER AND AIR DUCT" .

DTC P0112, P0113 IAT SENSOR

PFP:22630

Component Description

ABS007JT

The intake air temperature sensor is built-into mass air flow sensor. The sensor detects intake air temperature and transmits a signal to the ECM.
The temperature sensing unit uses a thermistor which is sensitive to the change in temperature. Electrical resistance of the thermistor decreases in response to the temperature rise.

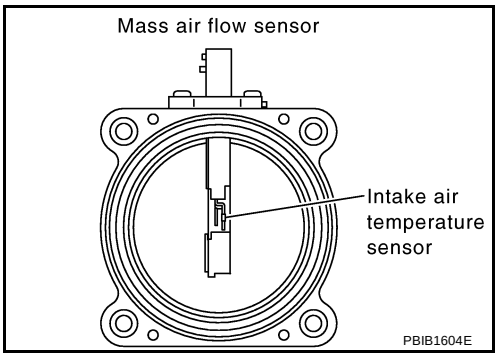

<Reference data>

Intake air temperature °C (°F)	Voltage* V	Resistance kΩ
25 (77)	3.32	1.94 - 2.06
80 (176)	1.23	0.295 - 0.349

*: These data are reference values and are measured between ECM terminal 34 (Intake air temperature sensor) and ground.

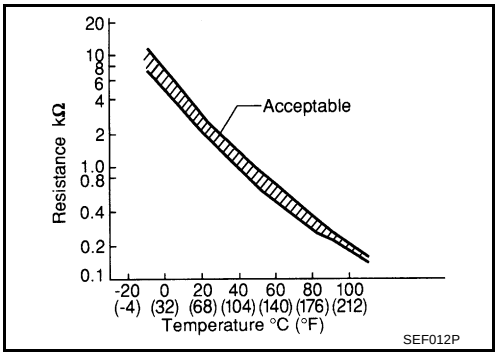

CAUTION:
Do not use ECM ground terminals when measuring input/output voltage. Doing so may result in damage to the ECM's transistor. Use a ground other than ECM terminals, such as the ground.

On Board Diagnosis Logic

ABS007JU

DTC No.	Trouble diagnosis name	DTC detecting condition	Possible cause
P0112 0112	Intake air temperature sensor circuit low input	An excessively low voltage from the sensor is sent to ECM.	● Harness or connectors (The sensor circuit is open or shorted.) ● Intake air temperature sensor
P0113 0113	Intake air temperature sensor circuit high input	An excessively high voltage from the sensor is sent to ECM.	

DTC Confirmation Procedure

ABS007JV

NOTE:
If DTC Confirmation Procedure has been previously conducted, always turn ignition switch OFF and wait at least 10 seconds before conducting the next test.

WITH CONSULT-II

1. Turn ignition switch ON.
2. Select “DATA MONITOR” mode with CONSULT-II.
3. Wait at least 5 seconds.
4. If 1st trip DTC is detected, go to EC-912, "Diagnostic Procedure"
.

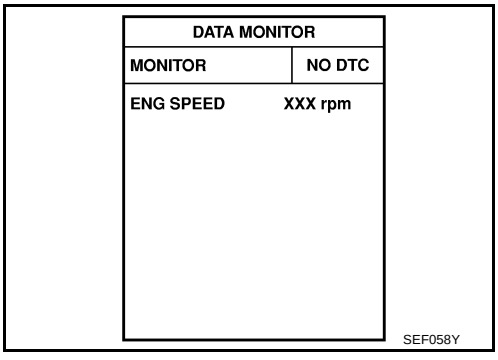

WITH GST

Follow the procedure “WITH CONSULT-II” above.

Wiring Diagram

ABS007JW

EC-IATS-01

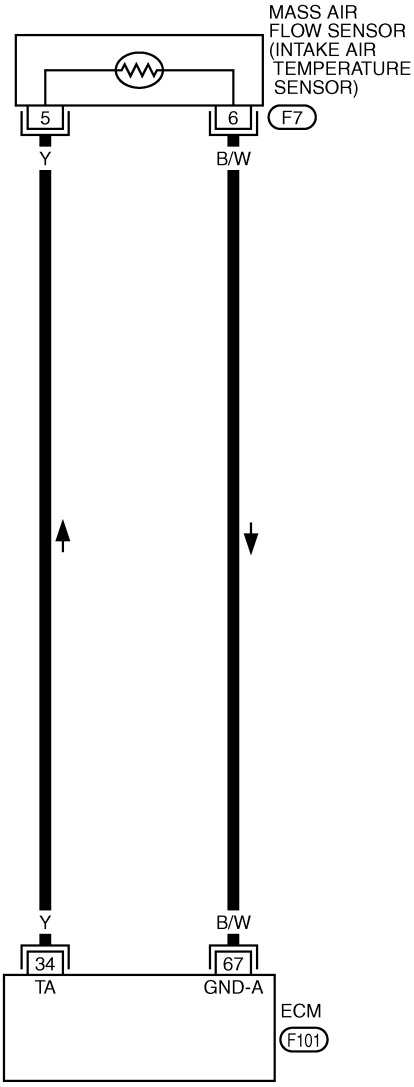

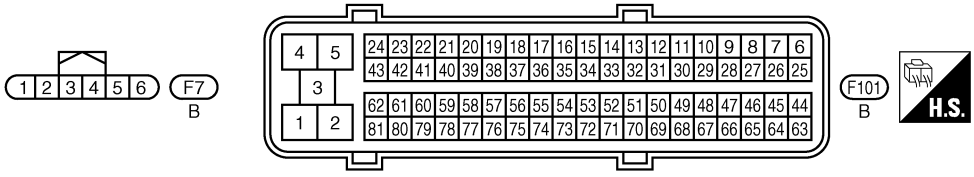

TBWM0723E

Diagnostic Procedure

ABS007JX

1. CHECK GROUND CONNECTIONS

1. Turn ignition switch OFF.
2. Loosen and retighten three ground screws on the body.
   Refer to EC-861, "Ground Inspection" .

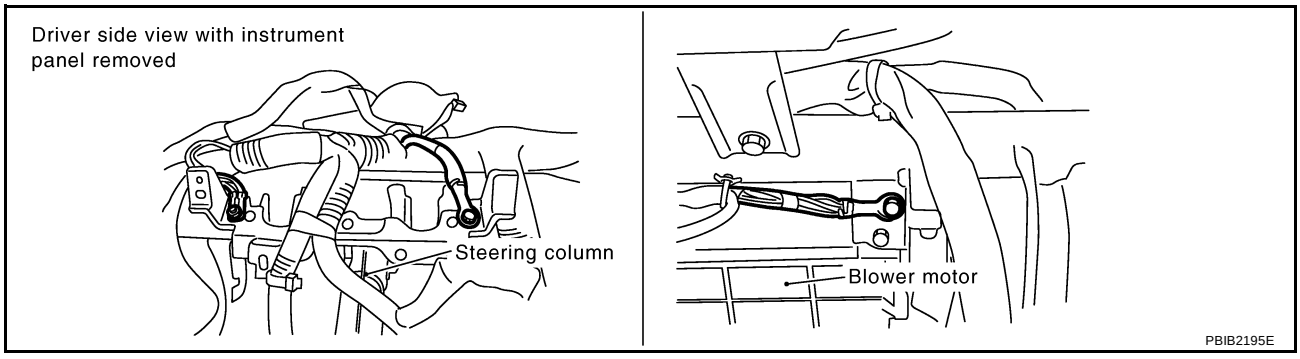

OK or NG

OK >> GO TO 2.
NG >> Repair or replace ground connections.

2. CHECK INTAKE AIR TEMPERATURE SENSOR POWER SUPPLY CIRCUIT

1. Disconnect mass air flow sensor (intake air temperature sensor is built-into) harness connector.
2. Turn ignition switch ON.

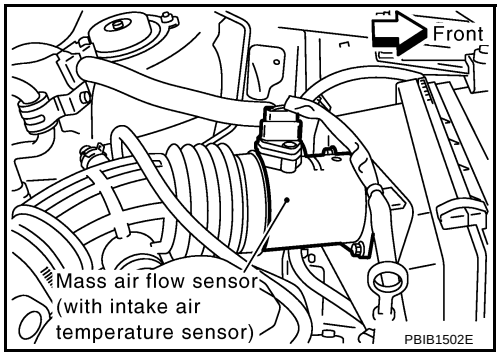

3. Check voltage between mass air flow sensor terminal 5 and ground.

   Voltage: Approximately 5V

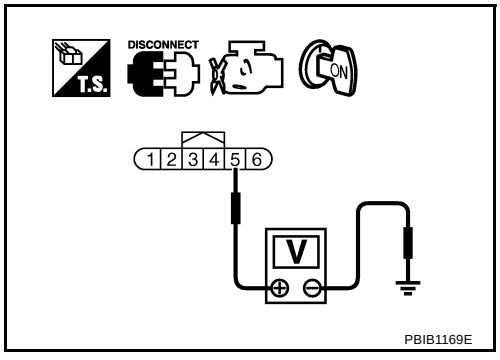

OK or NG

OK >> GO TO 3.
NG >> Repair open circuit or short to ground or short to power in harness or connectors.

3. CHECK INTAKE AIR TEMPERATURE SENSOR GROUND CIRCUIT FOR OPEN AND SHORT

1. Turn ignition switch OFF.
2. Disconnect ECM harness connector.
3. Check harness continuity between mass air flow sensor terminal 6 and ECM terminal 67. Refer to Wiring Diagram.

   Continuity should exist.

4. Also check harness for short to ground and short to power.

OK or NG

OK >> GO TO 4.
NG >> Repair open circuit or short to ground or short to power in harness or connectors.

4. CHECK INTAKE AIR TEMPERATURE SENSOR

Refer to EC-913, "Component Inspection" .

OK or NG

OK >> GO TO 5.
NG >> Replace mass air flow sensor (with intake air temperature sensor).

5. CHECK INTERMITTENT INCIDENT

Refer to EC-854, "TROUBLE DIAGNOSIS FOR INTERMITTENT INCIDENT" .

>> **INSPECTION END**

Component Inspection

ABS007JY

INTAKE AIR TEMPERATURE SENSOR

1. Check resistance between intake air temperature terminals 5 and 6 under the following conditions.

Intake air temperature °C (°F)	Resistance kΩ
25 (77)	1.94 - 2.06

2. If NG, replace mass air flow sensor (with intake air temperature sensor).

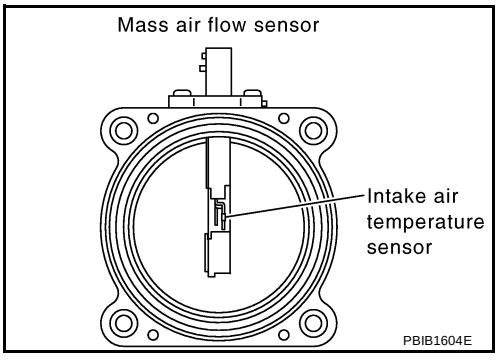

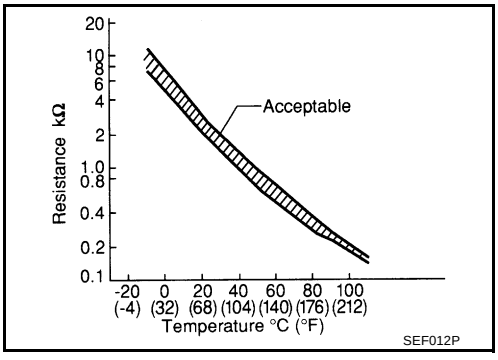

Removal and Installation

ABS007JZ

MASS AIR FLOW SENSOR

Refer to EM-176, "AIR CLEANER AND AIR DUCT" .

DTC P0117, P0118 ECT SENSOR

PFP:22630

Component Description

ABS007K0

The engine coolant temperature sensor is used to detect the engine coolant temperature. The sensor modifies a voltage signal from the ECM. The modified signal returns to the ECM as the engine coolant temperature input. The sensor uses a thermistor which is sensitive to the change in temperature. The electrical resistance of the thermistor decreases as temperature increases.

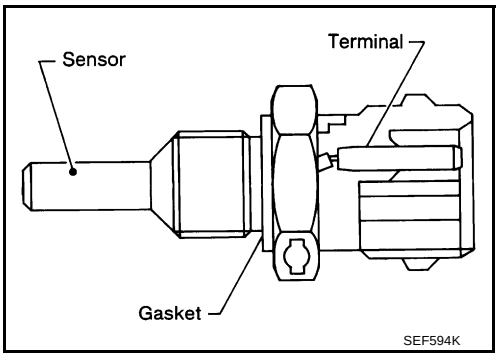

<Reference data>

Engine coolant temperature °C (°F)	Voltage* V	Resistance kΩ
–10 (14)	4.4	7.0 - 11.4
20 (68)	3.5	2.1 - 2.9
50 (122)	2.2	0.68 - 1.00
90 (194)	0.9	0.236 - 0.260

*: These data are reference values and are measured between ECM terminal 73 (Engine coolant temperature sensor) and ground.

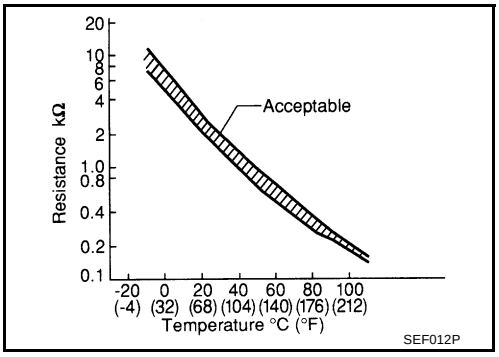

CAUTION:

Do not use ECM ground terminals when measuring input/output voltage. Doing so may result in damage to the ECM's transistor. Use a ground other than ECM terminals, such as the ground.

On Board Diagnosis Logic

ABS007K1

These self-diagnoses have the one trip detection logic.

DTC No.	Trouble Diagnosis Name	DTC Detecting Condition	Possible Cause
P0117 0117	Engine coolant temperature sensor circuit low input	An excessively low voltage from the sensor is sent to ECM.	● Harness or connectors (The sensor circuit is open or shorted.) ● Engine coolant temperature sensor
P0118 0118	Engine coolant temperature sensor circuit high input	An excessively high voltage from the sensor is sent to ECM.	

FAIL-SAFE MODE

When the malfunction is detected, the ECM enters fail-safe mode and the MIL lights up.

Detected items	Engine operating condition in fail-safe mode	
Engine coolant temperature sensor circuit	Engine coolant temperature will be determined by ECM based on the time after turning ignition switch ON or START. CONSULT-II displays the engine coolant temperature decided by ECM.	
	Condition	Engine coolant temperature decided (CONSULT-II display)
	Just as ignition switch is turned ON or START	40°C (104°F)
	More than approx. 4 minutes after ignition ON or START	80°C (176°F)
	Except as shown above	40 - 80°C (104 - 176°F) (Depends on the time)
	When the fail-safe system for engine coolant temperature sensor is activated, the cooling fan operates while engine is running.	

DTC Confirmation Procedure

ABS007K2

NOTE:
If DTC Confirmation Procedure has been previously conducted, always turn ignition switch OFF and wait at least 10 seconds before conducting the next test.

WITH CONSULT-II

1. Turn ignition switch ON.
2. Select “DATA MONITOR” mode with CONSULT-II.
3. Wait at least 5 seconds.
4. If DTC is detected, go to EC-917, "Diagnostic Procedure" .

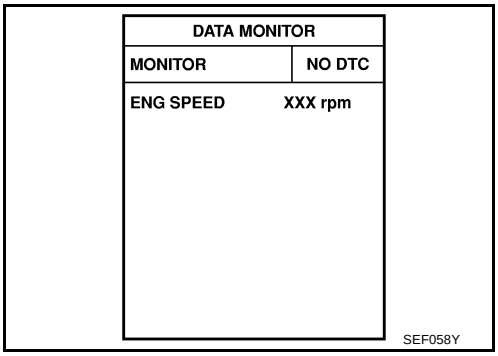

WITH GST

Follow the procedure “WITH CONSULT-II” above.

Wiring Diagram

ABS007K3

EC-ECTS-01

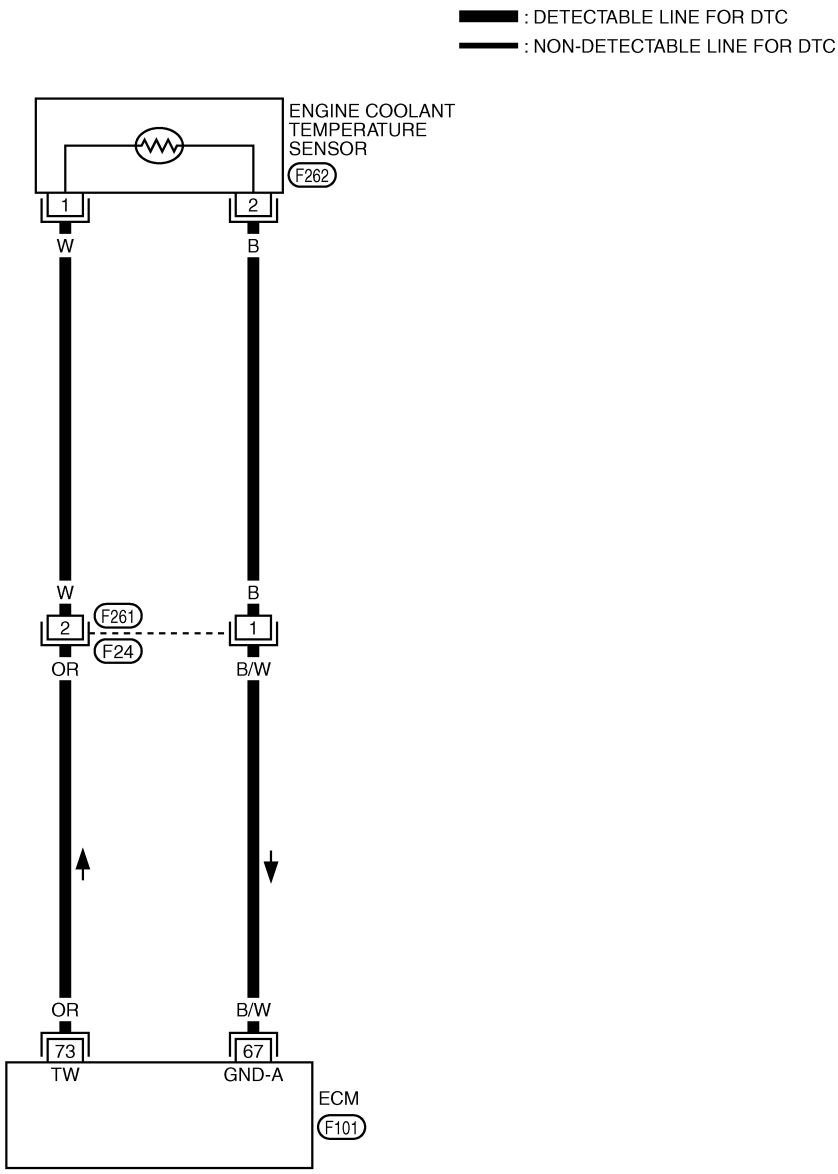

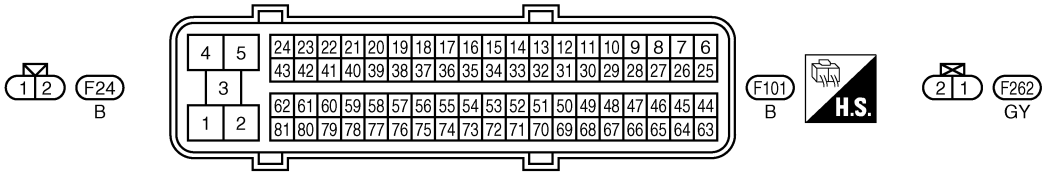

TBWM0227E

Diagnostic Procedure

ABS007K4

1. CHECK GROUND CONNECTIONS

1. Turn ignition switch OFF.
2. Loosen and retighten three ground screws on the body.
   Refer to EC-861, "Ground Inspection" .

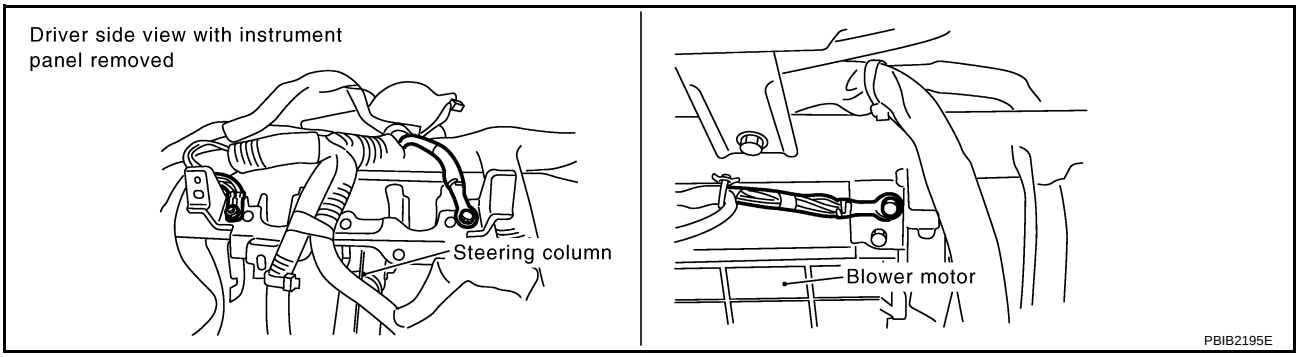

OK or NG

OK >> GO TO 2.
NG >> Repair or replace ground connections.

2. CHECK ECT SENSOR POWER SUPPLY CIRCUIT

1. Disconnect engine coolant temperature (ECT) sensor harness connector.

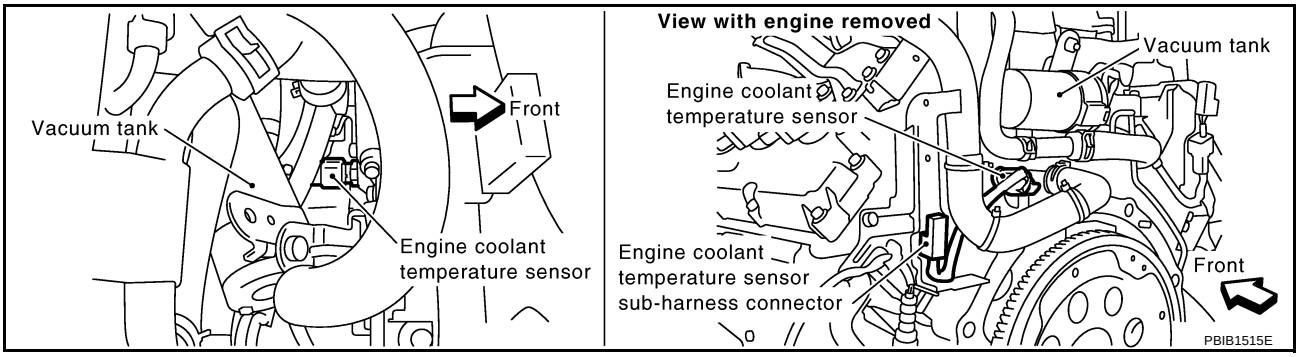

2. Turn ignition switch ON.
3. Check voltage between ECT sensor terminal 1 and ground with CONSULT-II or tester.

Voltage: Approximately 5V

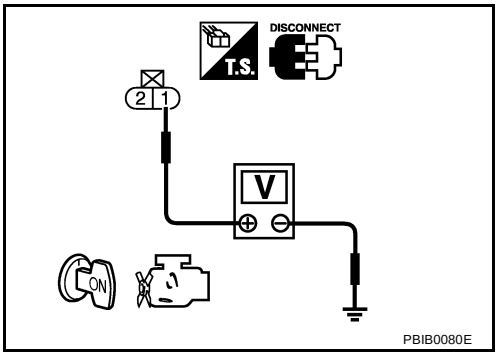

OK or NG

OK >> GO TO 4.
NG >> GO TO 3.

3. DETECT MALFUNCTIONING RART

Check the following.

- Harness connector F261, F24
- Harness for open or short between ECM and engine coolant temperature sensor

>> Repair open circuit or short to ground or short to power in harness or connectors.

4. CHECK ECT SENSOR GROUND CIRCUIT FOR OPEN AND SHORT

1. Turn ignition switch OFF.
2. Disconnect ECM harness connector.
3. Check harness continuity between ECT sensor terminal 2 and ECM terminal 67.
   Refer to Wiring Diagram.

   Continuity should exist.

4. Also check harness for short to ground and short to power.

OK or NG

OK >> GO TO 6.
NG >> GO TO 5.

5. DETECT MALFUNCTIONING PART

Check the following.

- Harness connector F261, F24
- Harness for open and short between ECT sensor and ECM

>> Repair open circuit or short to ground or short to power in harness or connectors.

6. CHECK ENGINE COOLANT TEMPERATURE SENSOR

Refer to EC-919, "Component Inspection" .

OK or NG

OK >> GO TO 7.
NG >> Replace engine coolant temperature sensor.

7. CHECK INTERMITTENT INCIDENT

Refer to EC-854, "TROUBLE DIAGNOSIS FOR INTERMITTENT INCIDENT" .

>> **INSPECTION END**

Component Inspection

ABS007K5

ENGINE COOLANT TEMPERATURE SENSOR

1. Check resistance between engine coolant temperature sensor terminals 1 and 2 as shown in the figure.

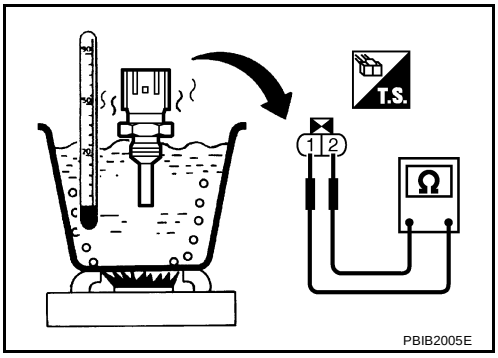

<Reference data>

Temperature °C (°F)	Resistance kΩ
20 (68)	2.1 - 2.9
50 (122)	0.68 - 1.00
90 (194)	0.236 - 0.260

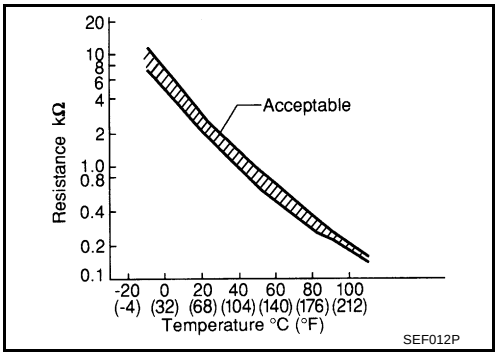

2. If NG, replace engine coolant temperature sensor.

Removal and Installation

ABS007K6

ENGINE COOLANT TEMPERATURE SENSOR

Refer to EM-229, "CYLINDER HEAD" .

DTC P0122, P0123 TP SENSOR

PFP:16119

Component Description

ABS007K7

Electric throttle control actuator consists of throttle control motor, throttle position sensor, etc. The throttle position sensor responds to the throttle valve movement.
The throttle position sensor has the two sensors. These sensors are a kind of potentiometers which transform the throttle valve position into output voltage, and emit the voltage signal to the ECM. In addition, these sensors detect the opening and closing speed of the throttle valve and feed the voltage signals to the ECM. The ECM judges the current opening angle of the throttle valve from these signals and the ECM controls the throttle control motor to make the throttle valve opening angle properly in response to driving condition.

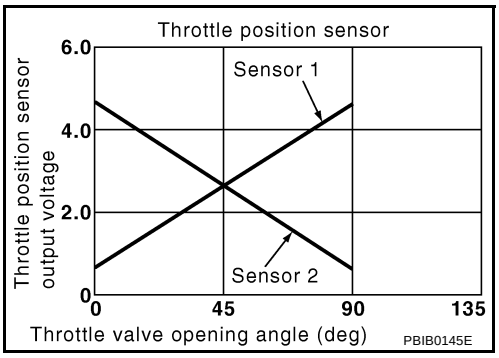

CONSULT-II Reference Value in Data Monitor Mode

ABS007K8

Specification data are reference values.

MONITOR ITEM	CONDITION		SPECIFICATION
THRTL SEN 1 THRTL SEN 2*	● Ignition switch: ON (Engine stopped) ● Selector lever: D	Accelerator pedal: Fully released	More than 0.36V
		Accelerator pedal: Fully depressed	Less than 4.75V

*: Throttle position sensor 2 signal is converted by ECM internally. Thus, it differs from ECM terminal voltage signal.

On Board Diagnosis Logic

ABS007K9

These self-diagnoses have the one trip detection logic.

DTC No.	Trouble diagnosis name	DTC detecting condition	Possible cause
P0122 0122	Throttle position sensor 2 circuit low input	An excessively low voltage from the TP sensor 2 is sent to ECM.	● Harness or connectors (TP sensor 2 circuit is open or shorted.) (APP sensor 2 circuit is shorted.) ● Electric throttle control actuator (TP sensor 2) ● Accelerator pedal position sensor (APP sensor 2)
P0123 0123	Throttle position sensor 2 circuit high input	An excessively high voltage from the TP sensor 2 is sent to ECM.	

FAIL-SAFE MODE

When the malfunction is detected, ECM enters fail-safe mode and the MIL lights up.

Engine operation condition in fail-safe mode
The ECM controls the electric throttle control actuator in regulating the throttle opening in order for the idle position to be within +10 degrees. The ECM regulates the opening speed of the throttle valve to be slower than the normal condition. So, the acceleration will be poor.

DTC Confirmation Procedure

ABS007KA

NOTE:
If DTC Confirmation Procedure has been previously conducted, always turn ignition switch OFF and wait at least 10 seconds before conducting the next test.
TESTING CONDITION:
Before performing the following procedure, confirm that battery voltage is more than 10V at idle.

WITH CONSULT-II

1. Turn ignition switch ON.
2. Select “DATA MONITOR” mode with CONSULT-II.
3. Start engine and let it idle for 1 second.
4. If DTC is detected, go to EC-923, "Diagnostic Procedure" .

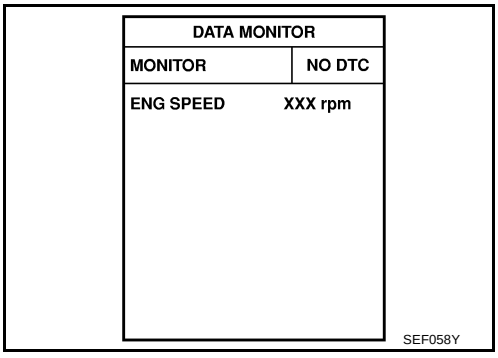

WITH GST

Follow the procedure “WITH CONSULT-II” above.

Wiring Diagram

ABS007KB

EC-TPS2-01

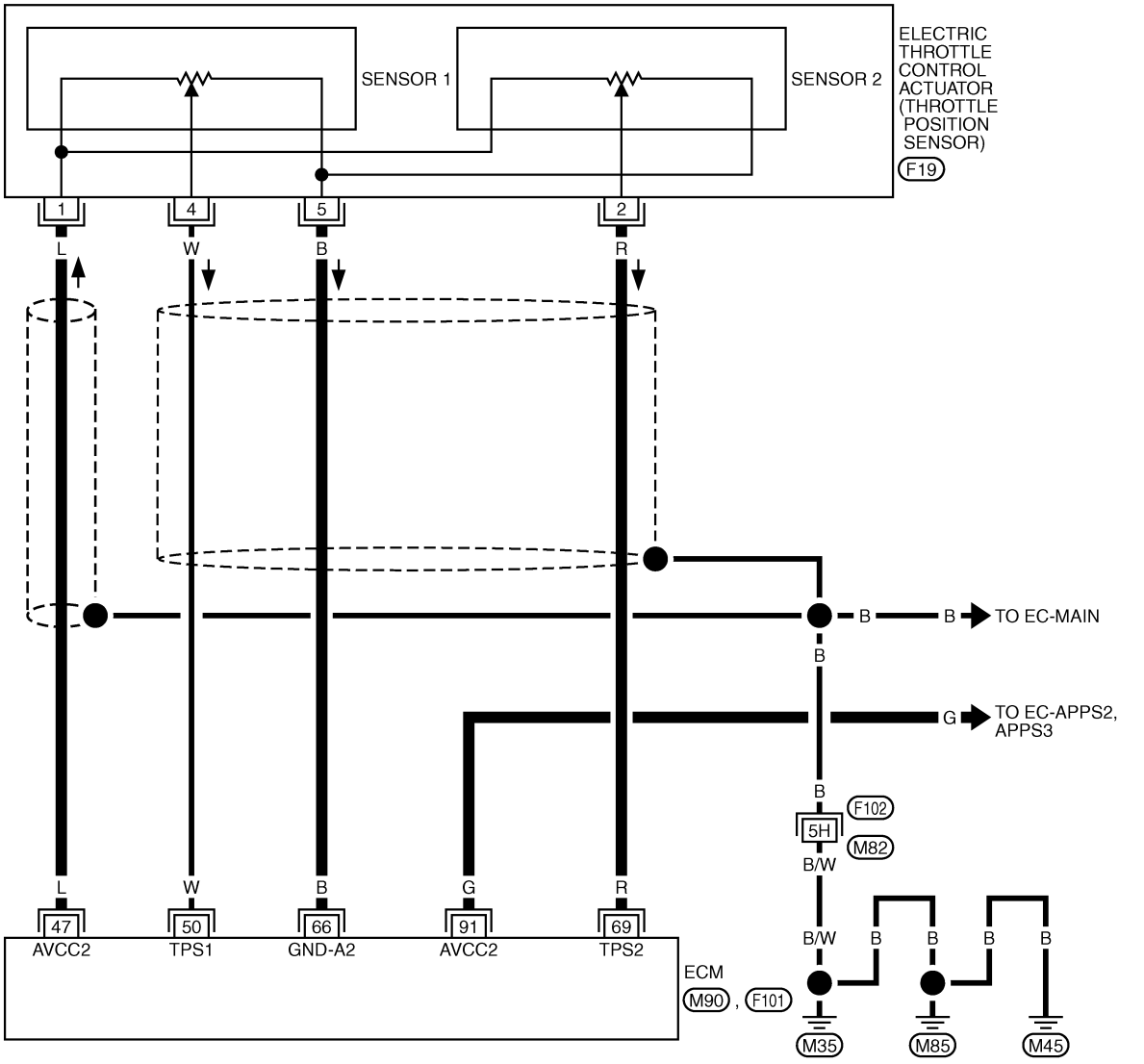

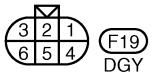

REFER TO THE FOLLOWING.
F102 -SUPER MULTIPLE JUNCTION (SMJ)

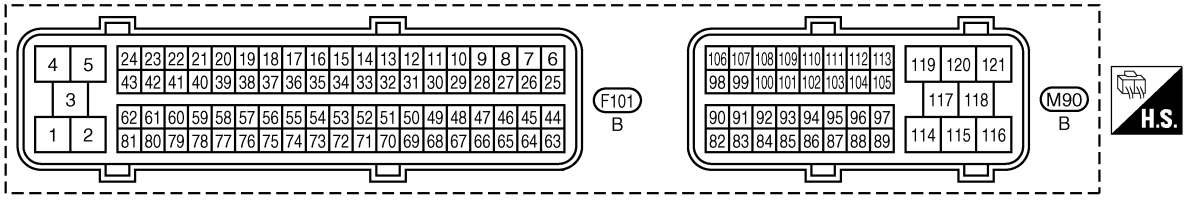

TBWM0410E

Specification data are reference values and are measured between each terminal and ground.

CAUTION:
Do not use ECM ground terminals when measuring input/output voltage. Doing so may result in damage to the ECM's transistor. Use a ground other than ECM terminals, such as the ground.

TERMINAL NO.	WIRE COLOR	ITEM	CONDITION	DATA (DC Voltage)
47	L	Sensor power supply (Throttle position sensor)	**[Ignition switch: ON]**	Approximately 5V
50	W	Throttle position sensor 1	**[Ignition switch: ON]** ● Engine stopped ● Selector lever: D ● Accelerator pedal: Fully released	More than 0.36V
			[Ignition switch: ON] ● Engine stopped ● Selector lever: D ● Accelerator pedal: Fully depressed	Less than 4.75V
66	B	Sensor ground (Throttle position sensor)	**[Engine is running]** ● **Warm-up condition** ● Idle speed	Approximately 0V
69	R	Throttle position sensor 2	**[Ignition switch: ON]** ● Engine stopped ● Selector lever: D ● Accelerator pedal: Fully released	Less than 4.75V
			[Ignition switch: ON] ● Engine stopped ● Selector lever: D ● Accelerator pedal: Fully depressed	More than 0.36V
91	G	Sensor power supply (APP sensor 2)	**[Ignition switch: ON]**	Approximately 5V

Diagnostic Procedure

ABS007KC

1. CHECK GROUND CONNECTIONS

1. Turn ignition switch OFF.
2. Loosen and retighten three ground screws on the body.
   Refer to EC-861, "Ground Inspection" .

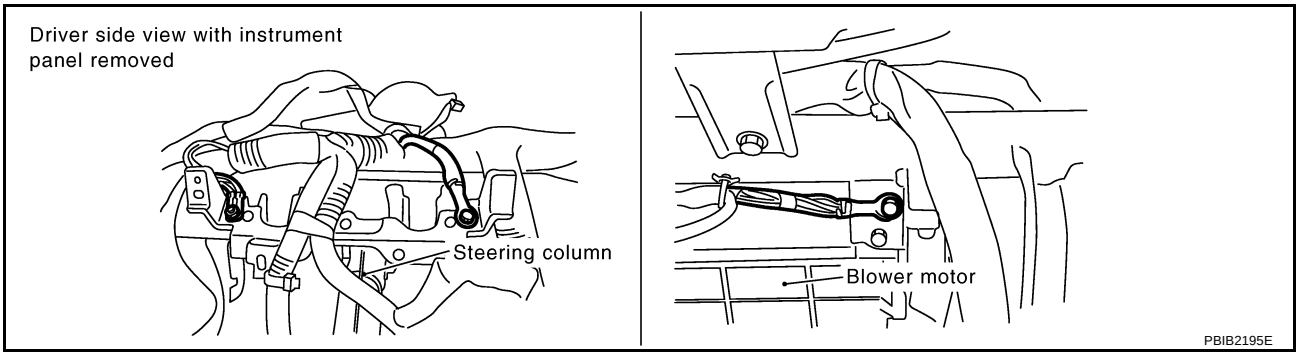

OK or NG

OK >> GO TO 2.
NG >> Repair or replace ground connections.

2. CHECK THROTTLE POSITION SENSOR 2 POWER SUPPLY CIRCUIT-I

1. Disconnect electric throttle control actuator harness connector.
2. Turn ignition switch ON.

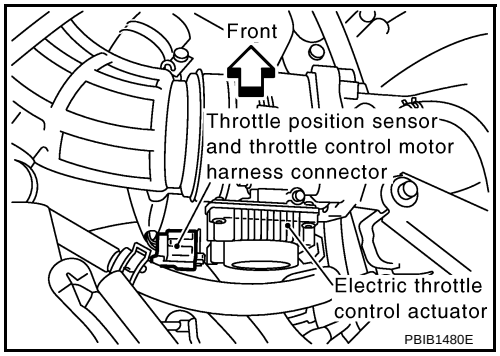

3. Check voltage between electric throttle control actuator terminal 1 and ground with CONSULT-II or tester.

Voltage: Approximately 5V

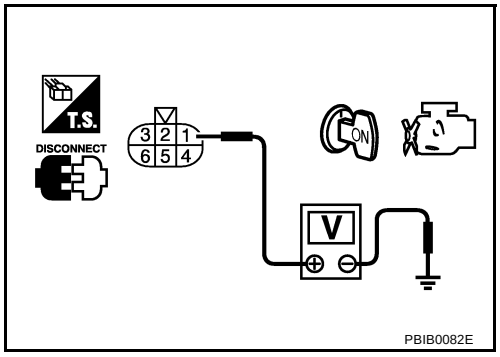

OK or NG

OK >> GO TO 7.
NG >> GO TO 3.

3. CHECK THROTTLE POSITION SENSOR 2 POWER SUPPLY CIRCUIT-II

1. Turn ignition switch OFF.
2. Disconnect ECM harness connector.
3. Check harness continuity between electric throttle control actuator terminal 1 and ECM terminal 47. Refer to Wiring Diagram.

Continuity should exist.

OK or NG

OK >> GO TO 4.
NG >> Repair open circuit.

4. CHECK THROTTLE POSITION SENSOR 2 POWER SUPPLY CIRCUIT-III

Check harness for short to power and short to ground, between the following terminals.

ECM terminal	Sensor terminal	Reference Wiring Diagram
47	Electric throttle control actuator terminal 1	EC-922
91	APP sensor terminal 4	EC-1311

OK or NG

OK >> GO TO 5.
NG >> Repair short to ground or short to power in harness or connectors.

5. CHECK APP SENSOR

Refer to EC-1315, "Component Inspection" .

OK or NG

OK >> GO TO 11.
NG >> GO TO 6.

6. REPLACE ACCELERATOR PEDAL ASSEMBLY

1. Replace accelerator pedal assembly.
2. Perform EC-786, "Accelerator Pedal Released Position Learning" .
3. Perform EC-786, "Throttle Valve Closed Position Learning" .
4. Perform EC-787, "Idle Air Volume Learning" .

>> **INSPECTION END**

7. CHECK THROTTLE POSITION SENSOR 2 GROUND CIRCUIT FOR OPEN AND SHORT

1. Turn ignition switch OFF.
2. Disconnect ECM harness connector.
3. Check harness continuity between electric throttle control actuator terminal 5 and ECM terminal 66. Refer to Wiring Diagram.

Continuity should exist.

4. Also check harness for short to ground and short to power.

OK or NG

OK >> GO TO 8.
NG >> Repair open circuit or short to ground or short to power in harness or connectors.

8. CHECK THROTTLE POSITION SENSOR 2 INPUT SIGNAL CIRCUIT FOR OPEN AND SHORT

1. Check harness continuity between ECM terminal 69 and electric throttle control actuator terminal 2. Refer to Wiring Diagram.

Continuity should exist.

2. Also check harness for short to ground and short to power.

OK or NG

OK >> GO TO 9.
NG >> Repair open circuit or short to ground or short to power in harness or connectors.

9. CHECK THROTTLE POSITION SENSOR

Refer to EC-926, "Component Inspection" .

OK or NG

OK >> GO TO 11.
NG >> GO TO 10.

10. REPLACE ELECTRIC THROTTLE CONTROL ACTUATOR

1. Replace the electric throttle control actuator.
2. Perform EC-786, "Throttle Valve Closed Position Learning" .
3. Perform EC-787, "Idle Air Volume Learning" .

>> **INSPECTION END**

11. CHECK INTERMITTENT INCIDENT

Refer to EC-854, "TROUBLE DIAGNOSIS FOR INTERMITTENT INCIDENT" .

>> **INSPECTION END**

Component Inspection

ABS007KD

THROTTLE POSITION SENSOR

1. Reconnect all harness connectors disconnected.
2. Perform EC-786, "Throttle Valve Closed Position Learning" .
3. Turn ignition switch ON.
4. Set selector lever to D position.
5. Check voltage between ECM terminals 50 (TP sensor 1 signal), 69 (TP sensor 2 signal) and ground under the following conditions.

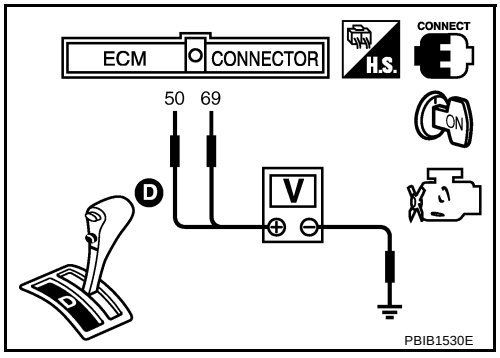

Terminal	Accelerator pedal	Voltage
50 (Throttle position sensor 1)	Fully released	More than 0.36V
	Fully depressed	Less than 4.75V
69 (Throttle position sensor 2)	Fully released	Less than 4.75V
	Fully depressed	More than 0.36V

6. If NG, replace electric throttle control actuator and go to the next step.
7. Perform EC-786, "Throttle Valve Closed Position Learning" .
8. Perform EC-787, "Idle Air Volume Learning" .

Removal and Installation

ABS007KE

ELECTRIC THROTTLE CONTROL ACTUATOR

Refer to EM-178, "INTAKE MANIFOLD" .

DTC P0125 ECT SENSOR

PFP:22630

Component Description

ABS007KF

NOTE:
If DTC P0125 is displayed with P0117 or P0118, first perform the trouble diagnosis for DTC P0117 or P0118. Refer to EC-914 .

The engine coolant temperature sensor is used to detect the engine coolant temperature. The sensor modifies a voltage signal from the ECM. The modified signal returns to the ECM as the engine coolant temperature input. The sensor uses a thermistor which is sensitive to the change in temperature. The electrical resistance of the thermistor decreases as temperature increases.

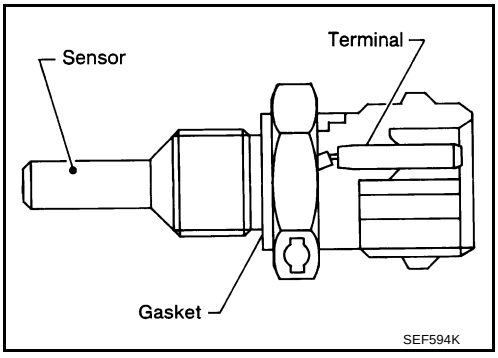

<Reference data>

Engine coolant temperature °C (°F)	Voltage* V	Resistance kΩ
–10 (14)	4.4	7.0 - 11.4
20 (68)	3.5	2.1 - 2.9
50 (122)	2.2	0.68 - 1.00
90 (194)	0.9	0.236 - 0.260

*: These data are reference values and are measured between ECM terminal 73 (Engine coolant temperature sensor) and ground.

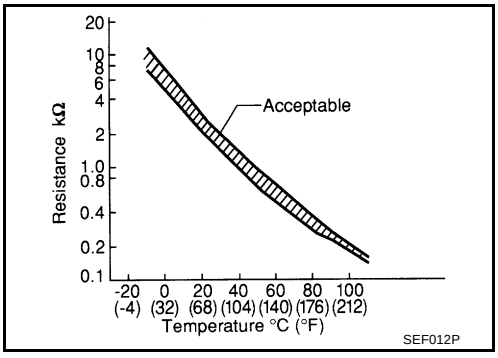

CAUTION:
Do not use ECM ground terminals when measuring input/output voltage. Doing so may result in damage to the ECM's transistor. Use a ground other than ECM terminals, such as the ground.

On Board Diagnosis Logic

ABS007KG

This self-diagnosis has the one trip detection logic.

DTC No.	Trouble diagnosis name	DTC detecting condition	Possible cause
P0125 0125	Insufficient engine coolant temperature for closed loop fuel control	● Voltage sent to ECM from the sensor is not practical, even when some time has passed after starting the engine. ● Engine coolant temperature is insufficient for closed loop fuel control.	● Harness or connectors (High resistance in the circuit) ● Engine coolant temperature sensor ● Thermostat

DTC Confirmation Procedure

ABS007KH

CAUTION:
Be careful not to overheat engine.

NOTE:
If DTC Confirmation Procedure has been previously conducted, always turn ignition switch OFF and wait at least 10 seconds before conducting the next test.

WITH CONSULT-II

1. Turn ignition switch ON.
2. Select “DATA MONITOR” mode with CONSULT-II.
3. Check that “COOLAN TEMP/S” is above 10°C (50°F).
   If it is above 10°C (50°F), the test result will be OK.
   If it is below 10°C (50°F), go to following step.
4. Start engine and run it for 65 minutes at idle speed.
   If “COOLAN TEMP/S” increases to more than 10°C (50°F) within 65 minutes, stop engine because the test result will be OK.
5. If DTC is detected, go to EC-928, "Diagnostic Procedure" .

DATA MONITOR	
MONITOR	NO DTC
ENG SPEED	XXX rpm
COOLAN TEMP/S	XXX °C

SEF174Y

WITH GST

Follow the procedure “WITH CONSULT-II” above.

Diagnostic Procedure

ABS007KI

1. CHECK GROUND CONNECTIONS

1. Turn ignition switch OFF.
2. Loosen and retighten three ground screws on the body.
   Refer to EC-861, "Ground Inspection" .

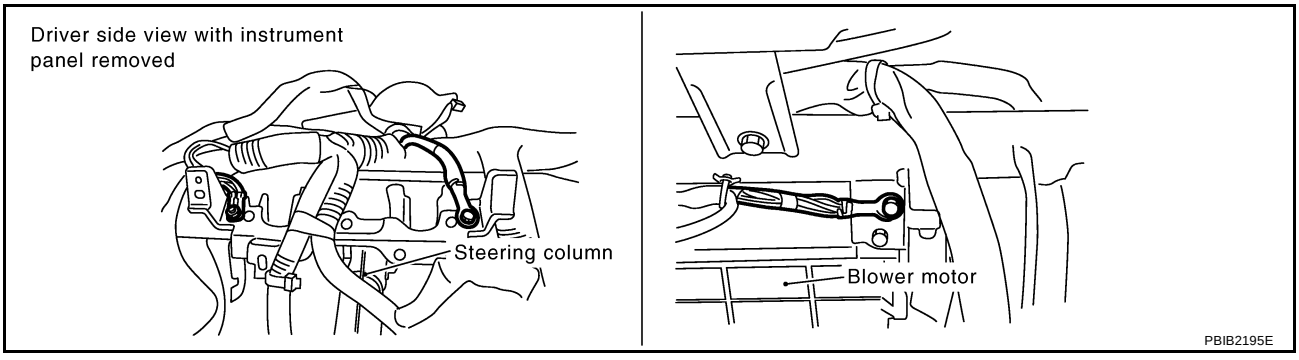

OK or NG

OK >> GO TO 2.
NG >> Repair or replace ground connections.

2. CHECK ENGINE COOLANT TEMPERATURE SENSOR

Refer to EC-929, "Component Inspection" .

OK or NG

OK >> GO TO 3.
NG >> Replace engine coolant temperature sensor.

3. CHECK THERMOSTAT OPERATION

When the engine is cold [lower than 70°C (158°F)] condition, grasp lower radiator hose and confirm the engine coolant does not flow.

OK or NG

OK >> GO TO 4.
NG >> Repair or replace thermostat. Refer to CO-53, "THERMOSTAT AND WATER CONTROL VALVE" .

4. CHECK INTERMITTENT INCIDENT

Refer to EC-854, "TROUBLE DIAGNOSIS FOR INTERMITTENT INCIDENT" .
Refer to EC-916, "Wiring Diagram" .

>> **INSPECTION END**

Component Inspection

ABS007KJ

ENGINE COOLANT TEMPERATURE SENSOR

1. Check resistance between engine coolant temperature sensor terminals 1 and 2 as shown in the figure.

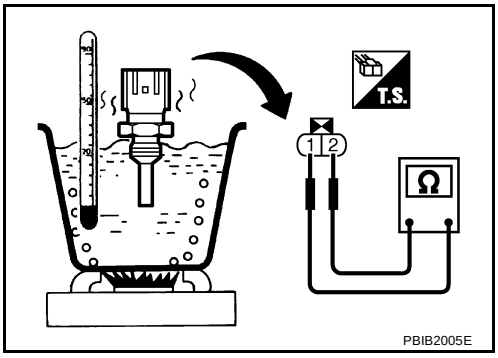

<Reference data>

Temperature °C (°F)	Resistance kΩ
20 (68)	2.1 - 2.9
50 (122)	0.68 - 1.00
90 (194)	0.236 - 0.260

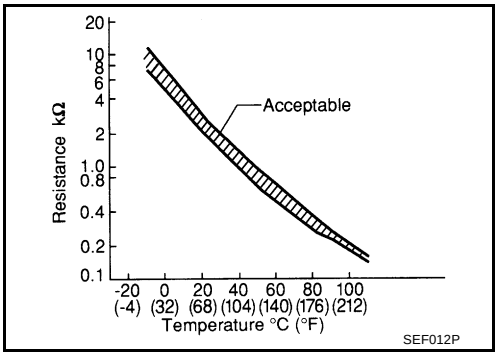

2. If NG, replace engine coolant temperature sensor.

Removal and Installation

ABS007KK

ENGINE COOLANT TEMPERATURE SENSOR

Refer to CO-53, "THERMOSTAT AND WATER CONTROL VALVE" .

DTC P0127 IAT SENSOR

PFP:22630

Component Description

ABS007KL

The intake air temperature sensor is built into mass air flow sensor. The sensor detects intake air temperature and transmits a signal to the ECM.
The temperature sensing unit uses a thermistor which is sensitive to the change in temperature. Electrical resistance of the thermistor decreases in response to the temperature rise.

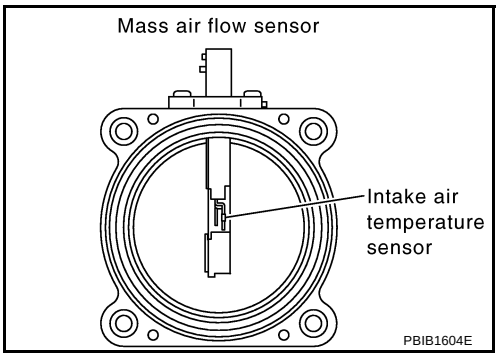

<Reference data>

Intake air temperature °C (°F)	Voltage* V	Resistance kΩ
25 (77)	3.32	1.94 - 2.06
80 (176)	1.23	0.295 - 0.349

*: These data are reference values and are measured between ECM terminal 34 (Intake air temperature sensor) and ground.

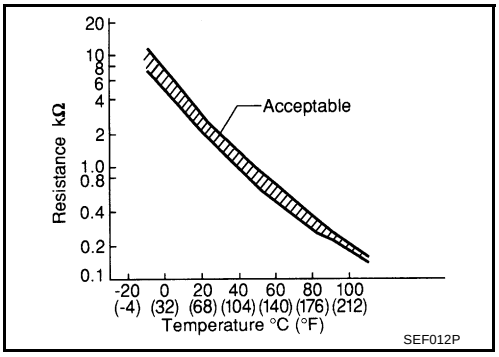

CAUTION:
Do not use ECM ground terminals when measuring input/output voltage. Doing so may result in damage to the ECM's transistor. Use a ground other than ECM terminals, such as the ground.

On Board Diagnosis Logic

ABS007KM

DTC No.	Trouble diagnosis name	DTC detecting condition	Possible cause
P0127 0127	Intake air temperature too high	Rationally incorrect voltage from the sensor is sent to ECM, compared with the voltage signal from engine coolant temperature sensor.	● Harness or connectors (The sensor circuit is open or shorted) ● Intake air temperature sensor

DTC Confirmation Procedure

ABS007KN

NOTE:
If DTC Confirmation Procedure has been previously conducted, always turn ignition switch OFF and wait at least 10 seconds before conducting the next test.

CAUTION:
Always drive vehicle at a safe speed.
TESTING CONDITION:
This test may be conducted with the drive wheels lifted in the shop or by driving the vehicle. If a road test is expected to be easier, it is unnecessary to lift the vehicle.

WITH CONSULT-II

1. Wait until engine coolant temperature is less than 90°C (194°F)

a. Turn ignition switch ON.

b. Select “DATA MONITOR” mode with CONSULT-II.
c. Check the engine coolant temperature.
d. If the engine coolant temperature is not less than 90°C (194°F), turn ignition switch OFF and cool down engine.
   - Perform the following steps before engine coolant temperature is above 90°C (194°F).
2. Turn ignition switch ON.
3. Select “DATA MONITOR” mode with CONSULT-II.
4. Start engine.
5. Hold vehicle speed at more than 70 km/h (43 MPH) for 100 consecutive seconds.
6. If 1st trip DTC is detected, go to EC-931, "Diagnostic Procedure" .

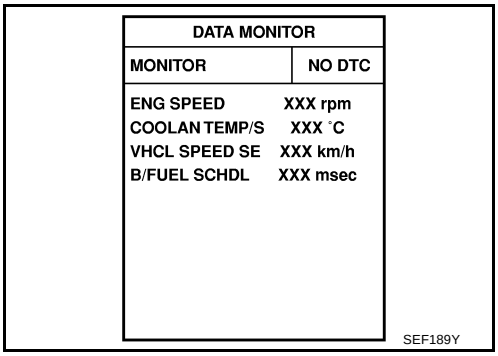

WITH GST

Follow the procedure “WITH CONSULT-II” above.

Diagnostic Procedure

ABS007KO

1. CHECK GROUND CONNECTIONS

1. Turn ignition switch OFF.
2. Loosen and retighten three ground screws on the body.
   Refer to EC-861, "Ground Inspection" .

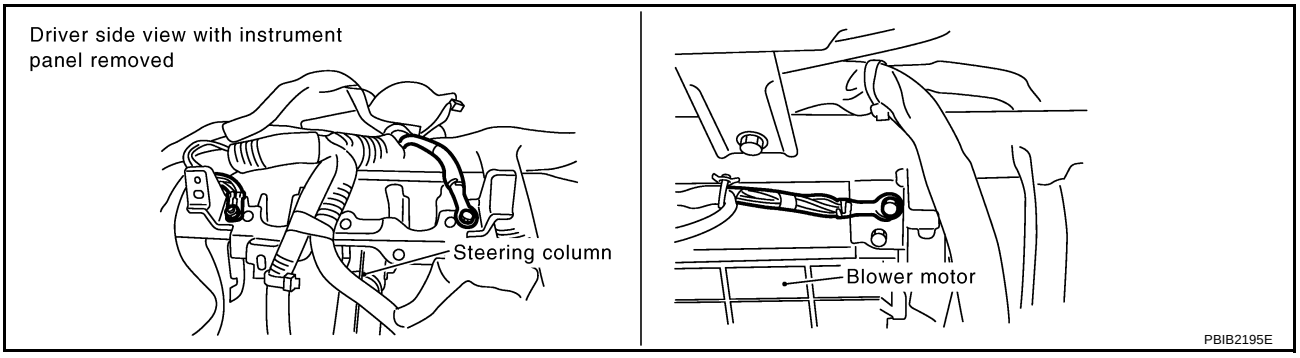

OK or NG

OK >> GO TO 2.
NG >> Repair or replace ground connections.

2. CHECK INTAKE AIR TEMPERATURE SENSOR

Refer to EC-913, "Component Inspection" .

OK or NG

OK >> GO TO 3.
NG >> Replace mass air flow sensor (with intake air temperature sensor).

3. CHECK INTERMITTENT INCIDENT

Refer to EC-854, "TROUBLE DIAGNOSIS FOR INTERMITTENT INCIDENT" .
Refer to EC-911, "Wiring Diagram" .

>> **INSPECTION END**

Component Inspection

ABS007KP

INTAKE AIR TEMPERATURE SENSOR

1. Check resistance between intake air temperature sensor terminals 5 and 6 under the following conditions.

Intake air temperature °C (°F)	Resistance kΩ
25 (77)	1.94 - 2.06

2. If NG, replace mass air flow sensor (with intake air temperature sensor).

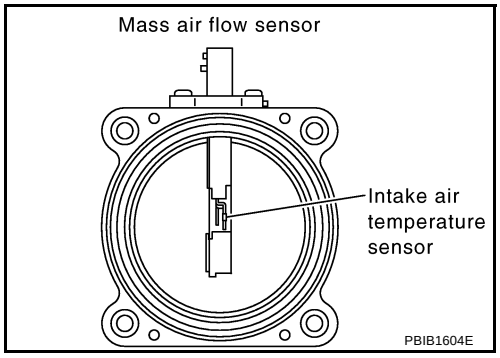

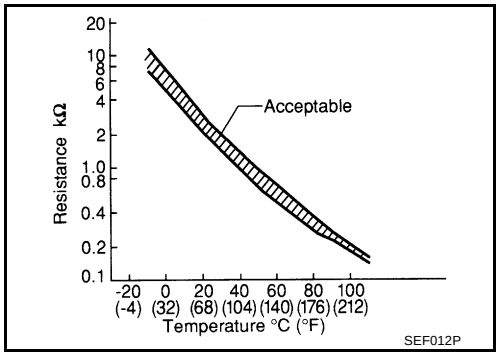

Removal and Installation

ABS007KQ

MASS AIR FLOW SENSOR

Refer to EM-176, "AIR CLEANER AND AIR DUCT" .

DTC P0128 THERMOSTAT FUNCTION

PFP:21200

On Board Diagnosis Logic

ABS007KR

Engine coolant temperature has not risen enough to open the thermostat even though the engine has run long enough.
This is due to a leak in the seal or the thermostat stuck open.

DTC No.	Trouble diagnosis name	DTC detecting condition	Possible cause
P0128 0128	Thermostat function	The engine coolant temperature does not reach to specified temperature even though the engine has run long enough.	● Thermostat ● Leakage from sealing portion of thermostat ● Engine coolant temperature sensor

DTC Confirmation Procedure

ABS007KS

NOTE:
If DTC Confirmation Procedure has been previously conducted, always turn ignition switch OFF and wait at least 10 seconds before conducting the next test.

TESTING CONDITION:

- **For best results, perform at ambient temperature of –10°C (14°F) or higher.**
- **For best results, perform at engine coolant temperature of –10°C (14°F) to 60°C (140°F).**

WITH CONSULT-II

1. Replace thermostat with new one. Refer to CO-53, "THERMOSTAT AND WATER CONTROL VALVE" . Use only a genuine NISSAN thermostat as a replacement. If an incorrect thermostat is used, the MIL may come on.
2. Turn ignition switch ON.
3. Select “COOLAN TEMP/S” in “DATA MONITOR” mode with CONSULT-II.
4. Check that the “COOLAN TEMP/S” is above 60°C (140°F).
   If it is below 60°C (140°F), go to following step.
   If it is above 60°C (140°F), cool down the engine to less than 60°C (140°F), then retry from step 1.
5. Drive vehicle for 10 consecutive minutes under the following conditions.

VHCL SPEED SE	80 - 120 km/h (50 - 75 MPH)

If 1st trip DTC is detected, go to EC-933, "Diagnostic Procedure" .

WITH GST

1. Follow the procedure “WITH CONSULT-II” above.

Diagnostic Procedure

ABS007KT

1. CHECK ENGINE COOLANT TEMPERATURE SENSOR

Refer to EC-934, "Component Inspection" .

OK or NG

OK >> **INSPECTION END**
NG >> Replace engine coolant temperature sensor.

Component Inspection

ABS007KU

ENGINE COOLANT TEMPERATURE SENSOR

1. Check resistance between engine coolant temperature sensor terminals 1 and 2 as shown in the figure.

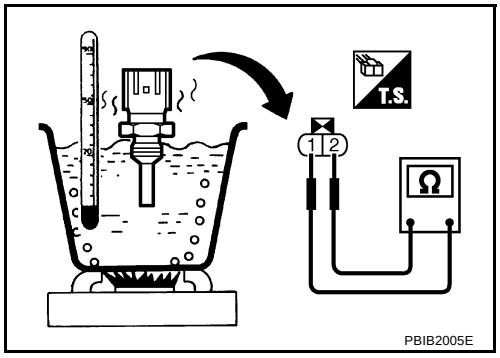

<Reference data>

Temperature °C (°F)	Resistance kΩ
20 (68)	2.1 - 2.9
50 (122)	0.68 - 1.0
90 (194)	0.236 - 0.260

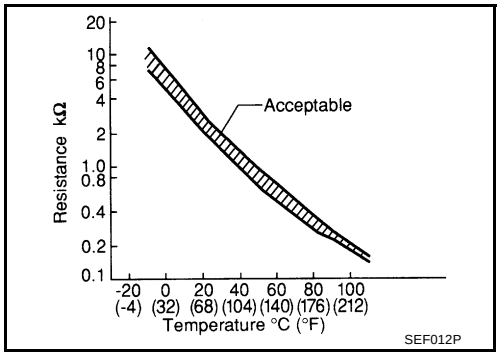

2. If NG, replace engine coolant temperature sensor.

Removal and Installation

ABS007KV

ENGINE COOLANT TEMPERATURE SENSOR

Refer to CO-53, "THERMOSTAT AND WATER CONTROL VALVE" .

DTC P0132, P0152 HO2S1

PFP:22690

Component Description

ABS007KW

The heated oxygen sensor 1 is placed into the exhaust manifold. It detects the amount of oxygen in the exhaust gas compared to the outside air. The heated oxygen sensor 1 has a closed-end tube made of ceramic zirconia. The zirconia generates voltage from approximately 1V in richer conditions to 0V in leaner conditions. The heated oxygen sensor 1 signal is sent to the ECM. The ECM adjusts the injection pulse duration to achieve the ideal air-fuel ratio. The ideal air-fuel ratio occurs near the radical change from 1 to 0V.

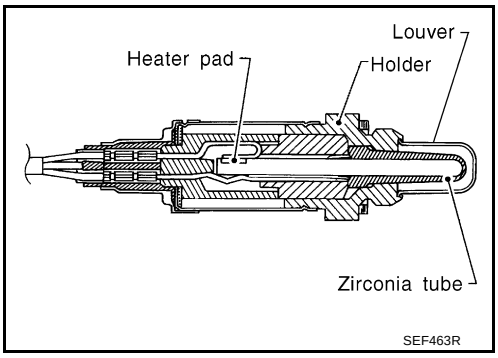

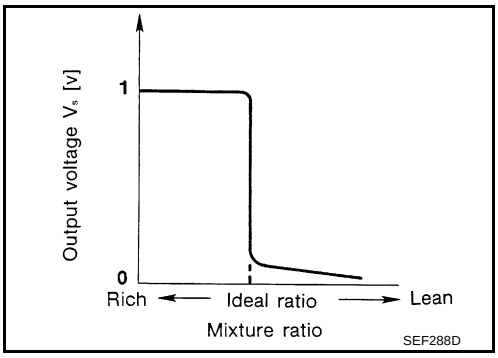

CONSULT-II Reference Value in Data Monitor Mode

ABS007KX

Specification data are reference values.

MONITOR ITEM	CONDITION		SPECIFICATION
HO2S1 (B1) HO2S1 (B2)	● Engine: After warming up	Maintaining engine speed at 2,000 rpm	0 - 0.3V ←→ Approx. 0.6 - 1.0V
HO2S1 MNTR (B1) HO2S1 MNTR (B2)			LEAN ←→ RICH Changes more than 5 times during 10 seconds.

On Board Diagnosis Logic

ABS007KY

To judge the malfunction, the diagnosis checks that the heated oxygen sensor 1 output is not inordinately high.

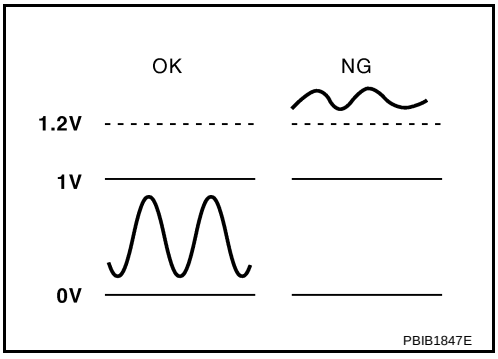

DTC No.	Trouble diagnosis name	DTC detecting condition	Possible cause
P0132 0132 (Bank 1)	Heated oxygen sensor 1 circuit high voltage	An excessively high voltage from the sensor is sent to ECM.	● Harness or connectors (The sensor circuit is open or shorted) ● Heated oxygen sensor 1
P0152 0152 (Bank 2)			

DTC Confirmation Procedure

ABS007KZ

NOTE:
If DTC Confirmation Procedure has been previously conducted, always turn ignition switch OFF and wait at least 10 seconds before conducting the next test.

WITH CONSULT-II

1. Start engine and warm it up to normal operating temperature.
2. Turn ignition switch OFF and wait at least 10 seconds.
3. Turn ignition switch ON.
4. Select “DATA MONITOR” mode with CONSULT-II.
5. Restart engine and let it idle for 2 minutes.
6. If 1st trip DTC is detected, go to EC-940, "Diagnostic Procedure"
.

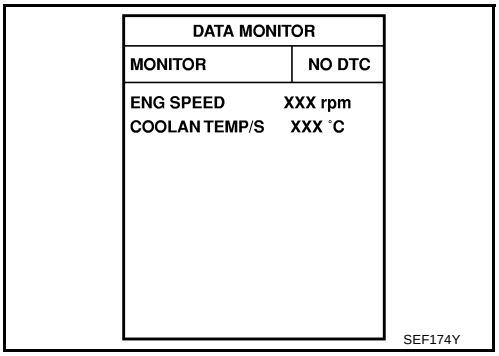

WITH GST

Follow the procedure “WITH CONSULT-II” above.

Wiring Diagram
BANK 1

ABS007L0

EC-O2S1B1-01

: DETECTABLE LINE FOR DTC
: NON-DETECTABLE LINE FOR DTC

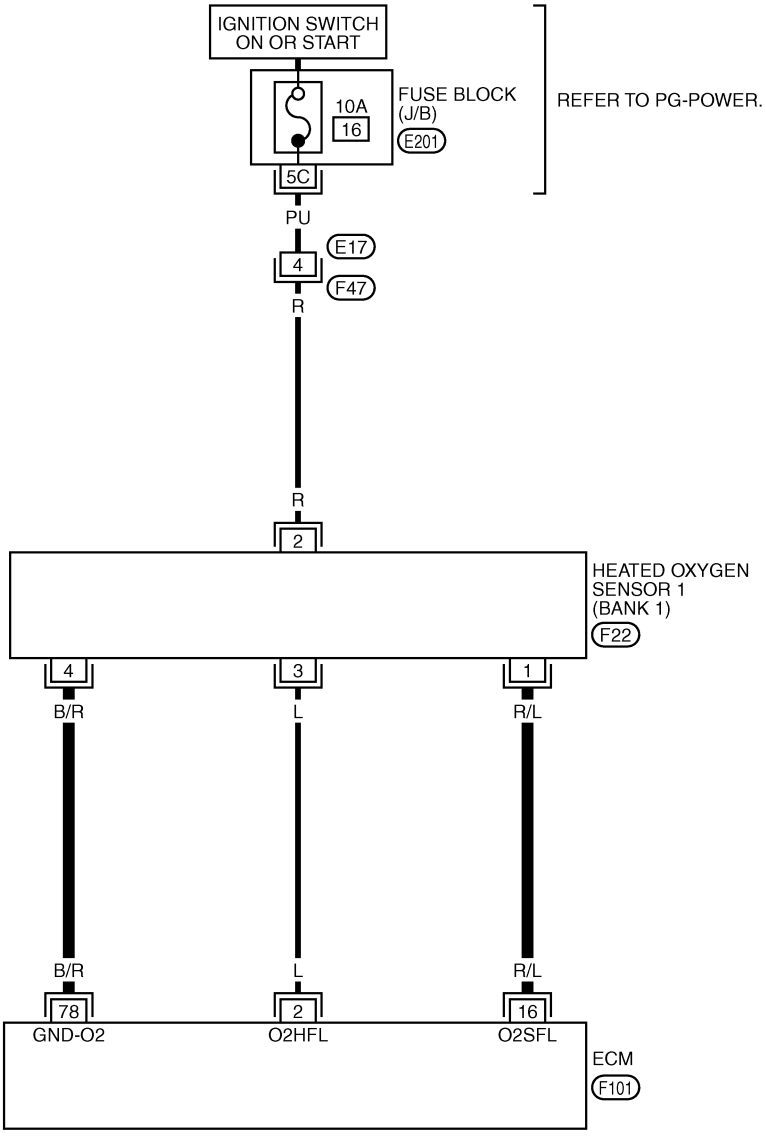

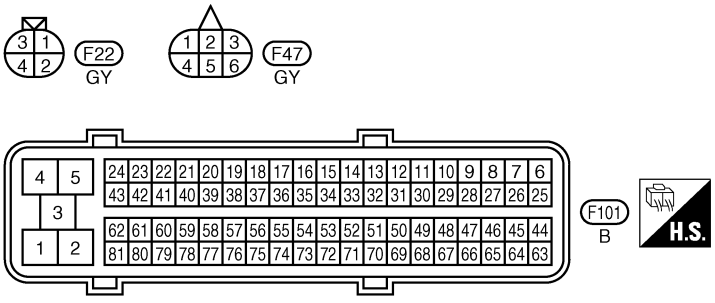

REFER TO THE FOLLOWING.
E201 -FUSE BLOCK-JUNCTION BOX (J/B)

TBWM0228E

Specification data are reference values and are measured between each terminal and ground.

CAUTION:

Do not use ECM ground terminals when measuring input/output voltage. Doing so may result in damage to the ECM's transistor. Use a ground other than ECM terminals, such as the ground.

TERMINAL NO.	WIRE COLOR	ITEM	CONDITION	DATA (DC Voltage)
16	R/L	Heated oxygen sensor 1 (bank 1)	**[Engine is running]** ● **Warm-up condition** ● Engine speed: 2,000 rpm	0 - Approximately 1.0V (Periodically change)
78	B/R	Sensor ground (Heated oxygen sensor)	**[Engine is running]** ● **Warm-up condition** ● Idle speed	Approximately 0V

BANK 2

EC-O2S1B2-01

: DETECTABLE LINE FOR DTC

: NON-DETECTABLE LINE FOR DTC

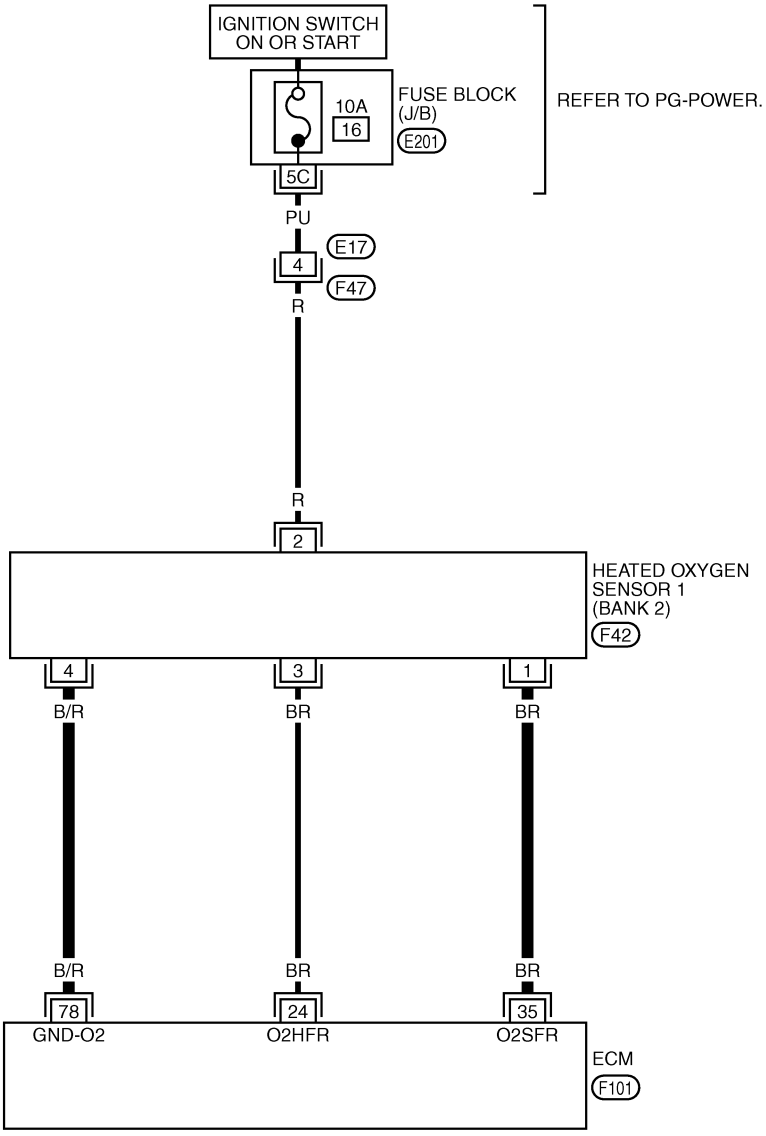

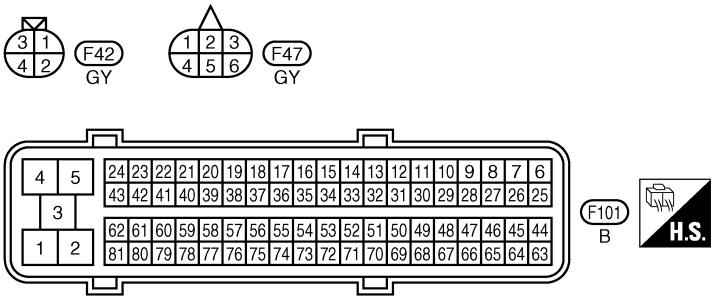

REFER TO THE FOLLOWING.

E201 -FUSE BLOCK-JUNCTION BOX (J/B)

TBWM0229E

Specification data are reference values and are measured between each terminal and ground.

CAUTION:

Do not use ECM ground terminals when measuring input/output voltage. Doing so may result in damage to the ECM's transistor. Use a ground other than ECM terminals, such as the ground.

TERMINAL NO.	WIRE COLOR	ITEM	CONDITION	DATA (DC Voltage)
35	BR	Heated oxygen sensor 1 (bank 2)	**[Engine is running]** ● **Warm-up condition** ● Engine speed:2,000 rpm	0 - Approximately 1.0V (Periodically change)
78	B/R	Sensor ground (Heated oxygen sensor)	**[Engine is running]** ● **Warm-up condition** ● Idle speed	Approximately 0V

Diagnostic Procedure

ABS007L1

1. CHECK GROUND CONNECTIONS

1. Turn ignition switch OFF.
2. Loosen and retighten three ground screws on the body.
   Refer to EC-861, "Ground Inspection" .

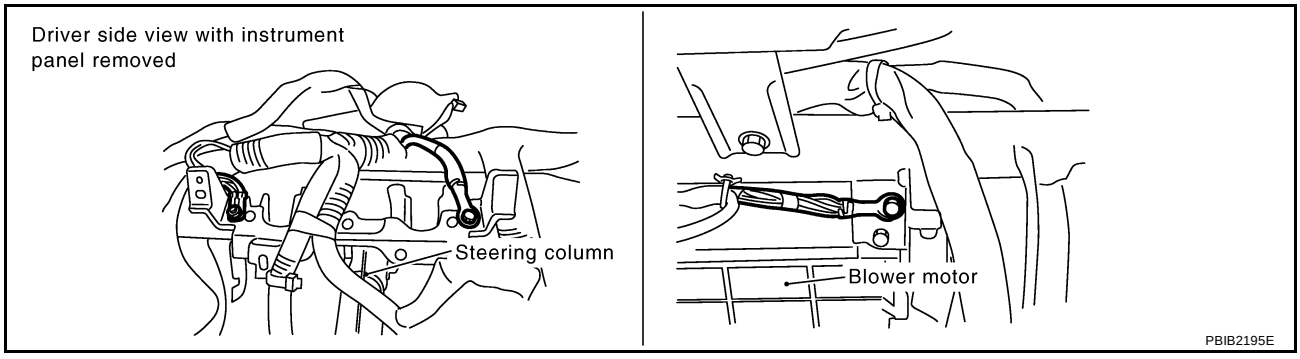

OK or NG

OK >> GO TO 2.

NG >> Repair or replace ground connections.

2. RETIGHTEN HEATED OXYGEN SENSOR 1

1. Loosen and retighten corresponding heated oxygen sensor 1.

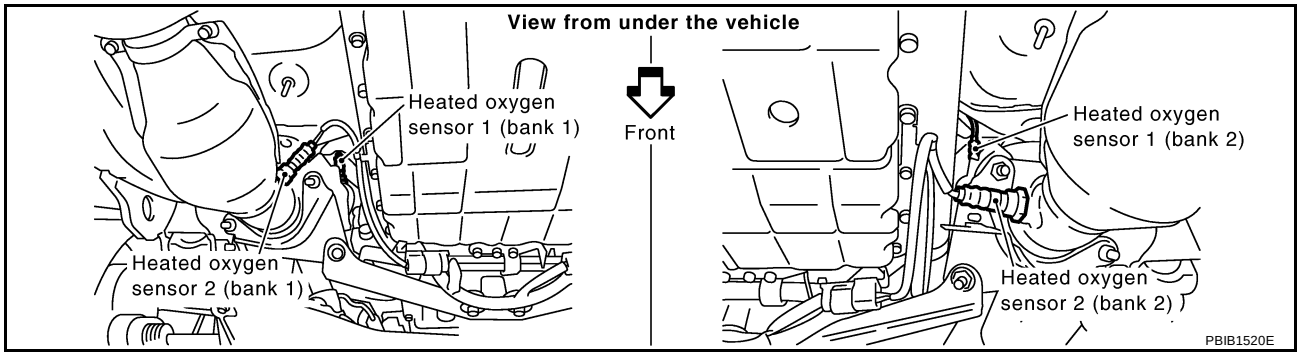

Tightening torque: 50 N·m (5.1 kg-m, 37 ft-lb)

>> GO TO 3.

3. CHECK HO2S1 GROUND CIRCUIT FOR OPEN AND SHORT

1. Disconnect heated oxygen sensor 1 harness connector.

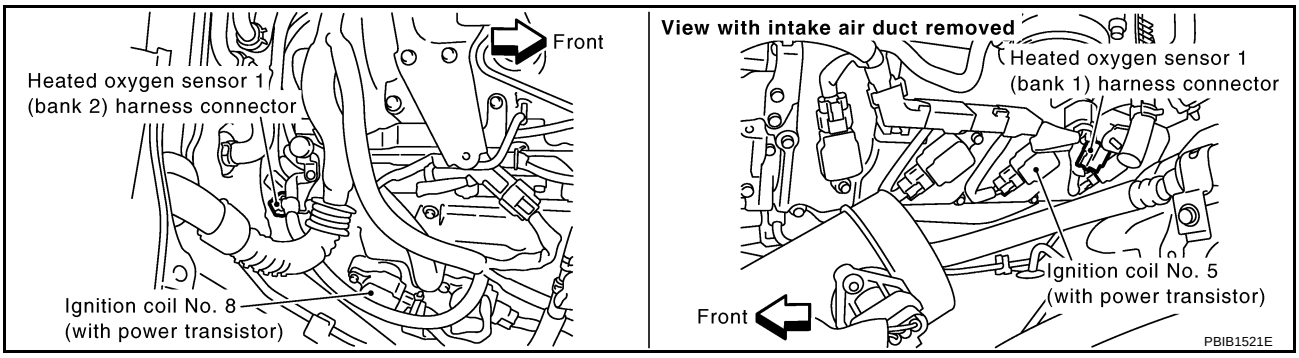

2. Disconnect ECM harness connector.
3. Check harness continuity between HO2S1 terminal 4 and ECM terminal 78.
   Refer to Wiring Diagram.

   Continuity should exist.

4. Also check harness for short to ground and short to power.

OK or NG

OK >> GO TO 4.
NG >> Repair open circuit or short to ground or short to power in harness or connectors.

4. CHECK HO2S1 INPUT SIGNAL CIRCUIT FOR OPEN AND SHORT

1. Check harness continuity between ECM terminal and HO2S1 terminal as follows.
   Refer to Wiring Diagram.

DTC	Terminals		Bank
	ECM	Sensor	
P0132	16	1	1
P0152	35	1	2

   Continuity should exist.

2. Check harness continuity between the following terminals and ground.
   Refer to Wiring Diagram.

DTC	Terminals		Bank
	ECM	Sensor	
P0132	16	1	1
P0152	35	1	2

   Continuity should not exist.

3. Also check harness for short to power.

OK or NG

OK >> GO TO 5.
NG >> Repair open circuit or short to ground or short to power in harness or connectors.

5. CHECK HO2S1 CONNECTOR FOR WATER

Check connectors for water.

Water should not exist.

OK or NG

OK >> GO TO 6.
NG >> Repair or replace harness or connectors.

6. CHECK HEATED OXYGEN SENSOR 1

Refer to EC-942, "Component Inspection" .

OK or NG

OK >> GO TO 7.
NG >> Replace malfunctioning heated oxygen sensor 1.

7. CHECK INTERMITTENT INCIDENT

Refer to EC-854, "TROUBLE DIAGNOSIS FOR INTERMITTENT INCIDENT" .

>> **INSPECTION END**

Component Inspection

ABS007L2

HEATED OXYGEN SENSOR 1

With CONSULT-II

1. Start engine and warm it up to normal operating temperature.
2. Select “MANU TRIG” and adjust “TRIGGER POINT” to 100% in “DATA MONITOR” mode with CONSULT-II.
3. Select “HO2S1 (B1)/(B2)” and “HO2S1 MNTR (B1)/(B2)”.
4. Hold engine speed at 2,000 rpm under no load during the following steps.
5. Touch “RECORD” on CONSULT-II screen.

DATA MONITOR	
MONITOR	NO DTC
ENG SPEED	XXX rpm
MAS A/F SE-B1	XXX V
COOLAN TEMP/S	XXX °C
HO2S1 (B1)	XXX V
HO2S1 MNTR (B1)	LEAN

SEF646Y

6. Check the following.
   - “HO2S1 MNTR (B1)/(B2)” in “DATA MONITOR” mode changes from “RICH” to “LEAN” to “RICH” more than 5 times in 10 seconds.
     5 times (cycles) are counted as shown at right.
   - “HO2S1 (B1)/(B2)” voltage goes above 0.6V at least once.
   - “HO2S1 (B1)/(B2)” voltage goes below 0.3V at least once.
   - “HO2S1 (B1)/(B2)” voltage never exceeds 1.0V.

Bank 1

cycle	1	2	3	4	5
HO2S1 MNTR (B1)	R-L-R-L-R-L-R-L-R-L-R				

Bank 2

cycle	1	2	3	4	5
HO2S1 MNTR (B2)	R-L-R-L-R-L-R-L-R-L-R				

R means HO2S1 MNTR (B1)/(B2) indicates RICH

L means HO2S1 MNTR (B1)/(B2) indicates LEAN

SEF647Y

Trigger	ENG SPEED	HO2S1 (B1)
	rpm	V
XXX	XXX	XXX
XXX	XXX	XXX
XXX	XXX	XXX
XXX	XXX	XXX
XXX	XXX	XXX
XXX	XXX	XXX
XXX	XXX	XXX
XXX	XXX	XXX
XXX	XXX	XXX
XXX	XXX	XXX
XXX	XXX	XXX
XXX	XXX	XXX

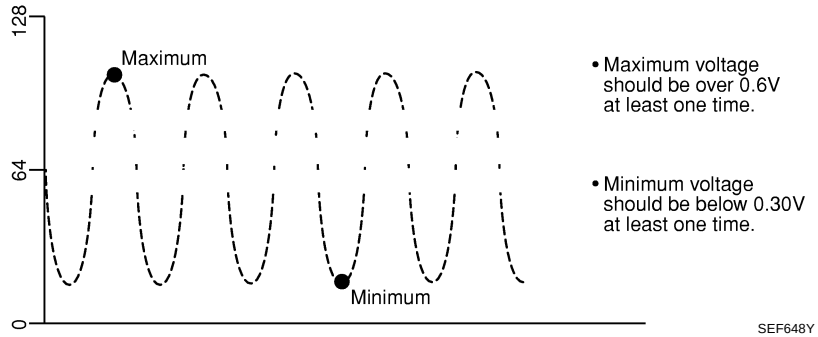

CAUTION:

- **Discard any heated oxygen sensor which has been dropped from a height of more than 0.5 m (19.7 in) onto a hard surface such as a concrete floor; use a new one.**
- **Before installing new oxygen sensor, clean exhaust system threads using Oxygen Sensor Thread Cleaner tool J-43897-18 or J-43897-12 and approved anti-seize lubricant.**

Without CONSULT-II

1. Start engine and warm it up to normal operating temperature.
2. Set voltmeter probes between ECM terminal 16 [HO2S1 (B1) signal] or 35 [HO2S1 (B2) signal] and ground.
3. Check the following with engine speed held at 2,000 rpm constant under no load.
   - The voltage fluctuates between 0 to 0.3V and 0.6 to 1.0V more than 5 times within 10 seconds.
   - The maximum voltage is over 0.6V at least 1 time.
   - The minimum voltage is below 0.3V at least 1 time.
   - The voltage never exceeds 1.0V.

   1 time: 0 - 0.3V → 0.6 - 1.0V → 0 - 0.3V
   2 times: 0 - 0.3V → 0.6 - 1.0V → 0 - 0.3V → 0.6 - 1.0V → 0 - 0.3V

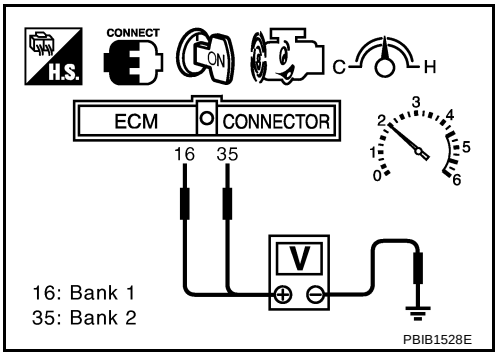

CAUTION:

- **Discard any heated oxygen sensor which has been dropped from a height of more than 0.5 m (19.7 in) onto a hard surface such as a concrete floor; use a new one.**
- **Before installing new oxygen sensor, clean exhaust system threads using Oxygen Sensor Thread Cleaner tool J-43897-18 or J-43897-12 and approved anti-seize lubricant.**

Removal and Installation

ABS007L3

HEATED OXYGEN SENSOR 1

Refer to EM-182, "EXHAUST MANIFOLD AND THREE WAY CATALYST" .

DTC P0133, P0153 HO2S1

PFP:22690

Component Description

ABS007L4

The heated oxygen sensor 1 is placed into the exhaust manifold. It detects the amount of oxygen in the exhaust gas compared to the outside air. The heated oxygen sensor 1 has a closed-end tube made of ceramic zirconia. The zirconia generates voltage from approximately 1V in richer conditions to 0V in leaner conditions. The heated oxygen sensor 1 signal is sent to the ECM. The ECM adjusts the injection pulse duration to achieve the ideal air-fuel ratio. The ideal air-fuel ratio occurs near the radical change from 1 to 0V.

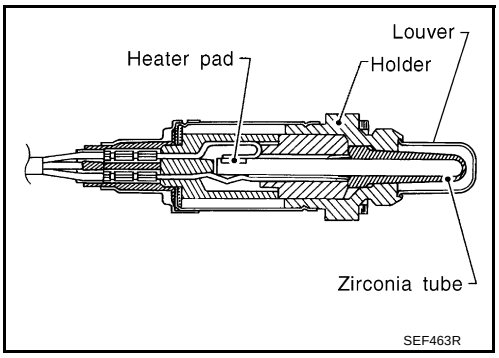

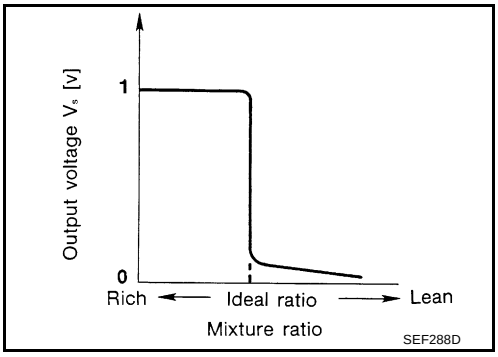

CONSULT-II Reference Value in Data Monitor Mode

ABS007L5

Specification data are reference values.

MONITOR ITEM	CONDITION		SPECIFICATION
HO2S1 (B1) HO2S1 (B2)	● Engine: After warming up	Maintaining engine speed at 2,000 rpm	0 - 0.3V ←→ Approx. 0.6 - 1.0V
HO2S1 MNTR (B1) HO2S1 MNTR (B2)			LEAN ←→ RICH Changes more than 5 times during 10 seconds.

On Board Diagnosis Logic

ABS007L6

To judge the malfunction of heated oxygen sensor 1, this diagnosis measures response time of heated oxygen sensor 1 signal. The time is compensated by engine operating (speed and load), fuel feedback control constant, and heated oxygen sensor 1 temperature index. Judgment is based on whether the compensated time (heated oxygen sensor 1 cycling time index) is inordinately long or not.

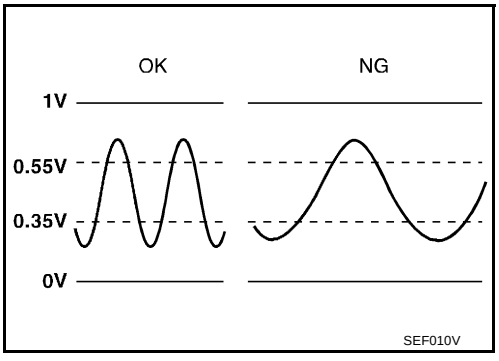

DTC No.	Trouble diagnosis name	DTC detecting condition	Possible cause
P0133 0133 (Bank 1)	Heated oxygen sensor 1 circuit slow response	The response of the voltage signal from the sensor takes more than the specified time.	● Harness or connectors (The sensor circuit is open or shorted) ● Heated oxygen sensor 1 ● Fuel pressure ● Fuel injector ● Intake air leaks ● Exhaust gas leaks ● PCV valve ● Mass air flow sensor
P0153 0153 (Bank 2)			

DTC Confirmation Procedure

ABS007L7

CAUTION:
Always drive vehicle at a safe speed.

NOTE:
If DTC Confirmation Procedure has been previously conducted, always turn ignition switch OFF and wait at least 10 seconds before conducting the next test.

TESTING CONDITION:
Before performing the following procedure, confirm that battery voltage is more than 11V at idle.

WITH CONSULT-II

1. Start engine and warm it up to normal operating temperature.
2. Stop engine and wait at least 10 seconds.
3. Turn ignition switch ON and select “HO2S1 (B1) P0133” or “HO2S1 (B2) P0153” of “HO2S1” in “DTC WORK SUPPORT” mode with CONSULT-II.
4. Touch “START”.
5. Start engine and let it idle for at least 3 minutes.

   NOTE:
   Do not raise engine speed above 3,000 rpm after this step. If the engine speed limit is exceeded, return to step 5.

HO2S1 (B1) P0133	
OUT OF CONDITION	
MONITOR	
ENG SPEED	XXX rpm
B/FUEL SCHDL	XXX msec
COOLAN TEMP/S	XXX °C
VHCL SPEED SEN	XXX km/h

SEF338Z

6. When the following conditions are met, “TESTING” will be displayed on the CONSULT-II screen. Maintain the conditions continuously until “TESTING” changes to “COMPLETED”. (It will take approximately 40 to 50 seconds.)

ENG SPEED	1,350 - 2,900 rpm
Vehicle speed	More than 80 km/h (50 MPH)
B/FUEL SCHDL	1.7 - 12.0 msec
Selector lever	Suitable position

If “TESTING” is not displayed after 5 minutes, retry from step 2.

HO2S1 (B1) P0133	
TESTING	
MONITOR	
ENG SPEED	XXX rpm
B/FUEL SCHDL	XXX msec
COOLAN TEMP/S	XXX °C
VHCL SPEED SEN	XXX km/h

SEF339Z

7. Make sure that “OK” is displayed after touching “SELF-DIAG RESULTS”. If “NG” is displayed, refer to EC-950, "Diagnostic Procedure" .

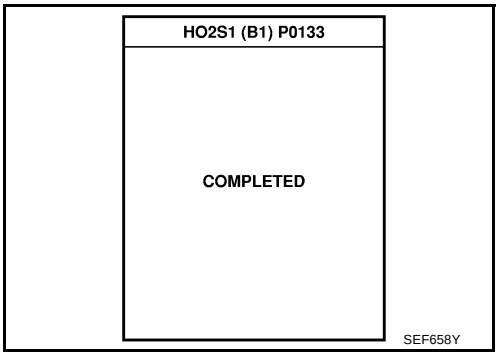

Overall Function Check

ABS007L8

Use this procedure to check the overall function of the heated oxygen sensor 1 circuit. During this check, a 1st trip DTC might not be confirmed.

WITH GST

1. Start engine and warm it up to normal operating temperature.
2. Set voltmeter probes between ECM terminal 16 [HO2S1(B1) signal] or 35 [HO2S1(B2) signal] and ground.
3. Check the following with engine speed held at 2,000 rpm constant under no load.
   - The voltage fluctuates between 0 to 0.3V and 0.6 to 1.0V more than 5 times within 10 seconds.

     1 time: 0 - 0.3V → 0.6 - 1.0V → 0 - 0.3V

     2 times: 0 - 0.3V → 0.6 - 1.0V → 0 - 0.3V → 0.6 - 1.0V → 0 - 0.3V
4. If NG, go to EC-950, "Diagnostic Procedure" .

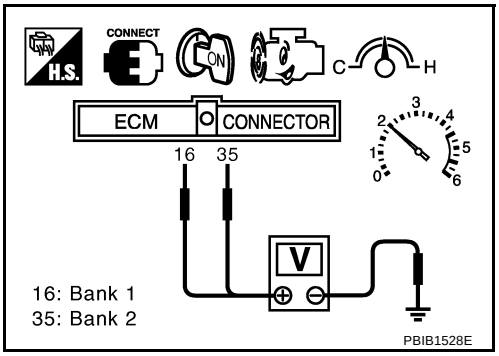

Wiring Diagram
BANK 1

ABS007L9

EC-O2S1B1-01

: DETECTABLE LINE FOR DTC
: NON-DETECTABLE LINE FOR DTC

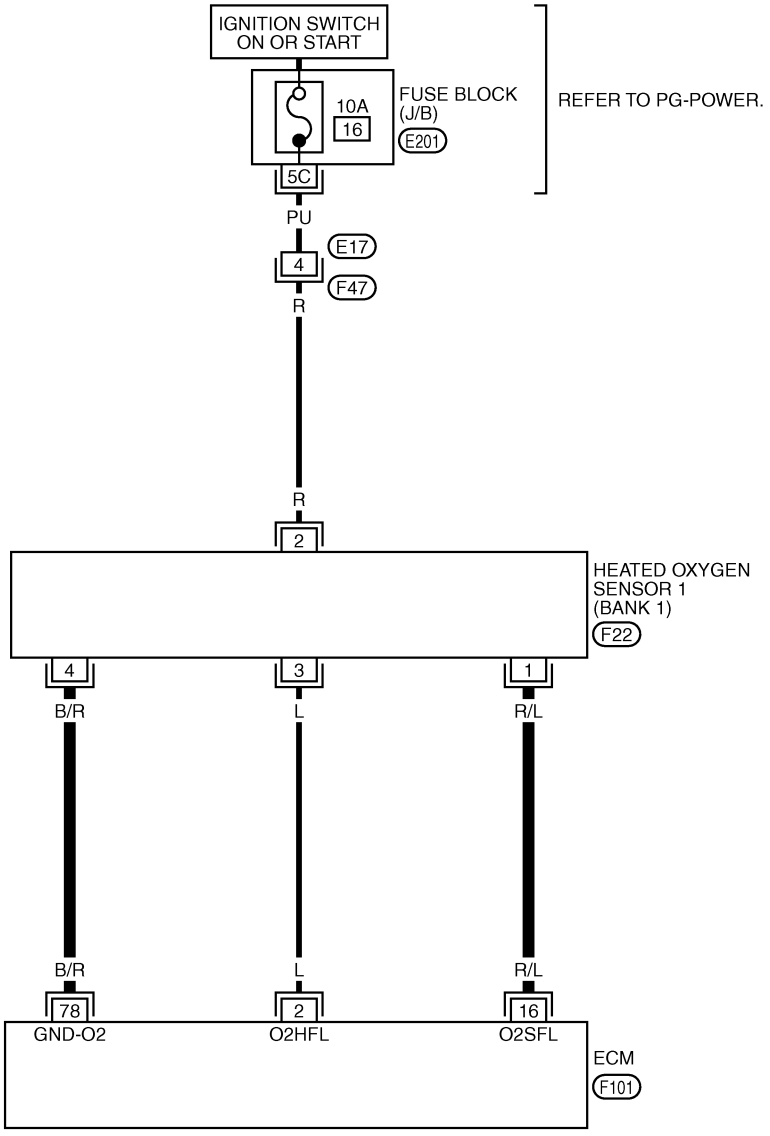

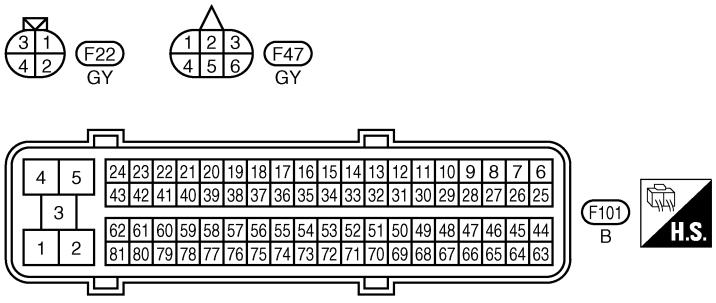

REFER TO THE FOLLOWING.
E201 -FUSE BLOCK-JUNCTION BOX (J/B)

TBWM0228E

Specification data are reference values and are measured between each terminal and ground.

CAUTION:

Do not use ECM ground terminals when measuring input/output voltage. Doing so may result in damage to the ECM's transistor. Use a ground other than ECM terminals, such as the ground.

TERMINAL NO.	WIRE COLOR	ITEM	CONDITION	DATA (DC Voltage)
16	R/L	Heated oxygen sensor 1 (bank 1)	**[Engine is running]** ● **Warm-up condition** ● Engine speed: 2,000 rpm	0 - Approximately 1.0V (Periodically change)
78	B/R	Sensor ground (Heated oxygen sensor)	**[Engine is running]** ● **Warm-up condition** ● Idle speed	Approximately 0V

BANK 2

EC-O2S1B2-01

: DETECTABLE LINE FOR DTC

: NON-DETECTABLE LINE FOR DTC

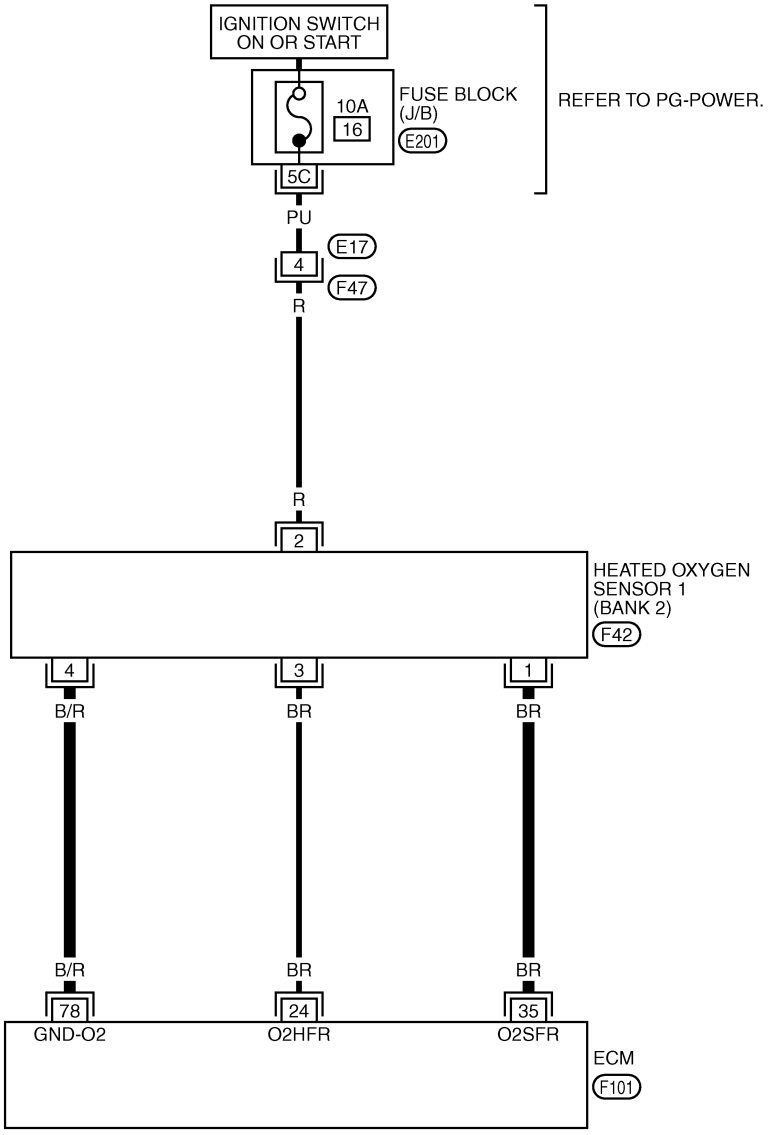

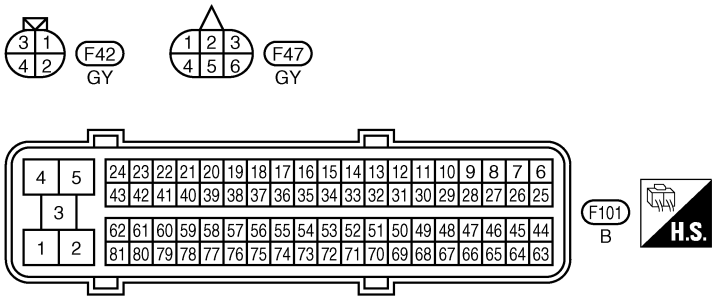

REFER TO THE FOLLOWING.

E201 -FUSE BLOCK-JUNCTION BOX (J/B)

TBWM0229E

Specification data are reference values and are measured between each terminal and ground.

CAUTION:

Do not use ECM ground terminals when measuring input/output voltage. Doing so may result in damage to the ECM's transistor. Use a ground other than ECM terminals, such as the ground.

TERMINAL NO.	WIRE COLOR	ITEM	CONDITION	DATA (DC Voltage)
35	BR	Heated oxygen sensor 1 (bank 2)	**[Engine is running]** ● **Warm-up condition** ● Engine speed:2,000 rpm	0 - Approximately 1.0V (Periodically change)
78	B/R	Sensor ground (Heated oxygen sensor)	**[Engine is running]** ● **Warm-up condition** ● Idle speed	Approximately 0V

Diagnostic Procedure

ABS007LA

1. CHECK GROUND CONNECTIONS

1. Turn ignition switch OFF.
2. Loosen and retighten three ground screws on the body.
   Refer to EC-861, "Ground Inspection" .

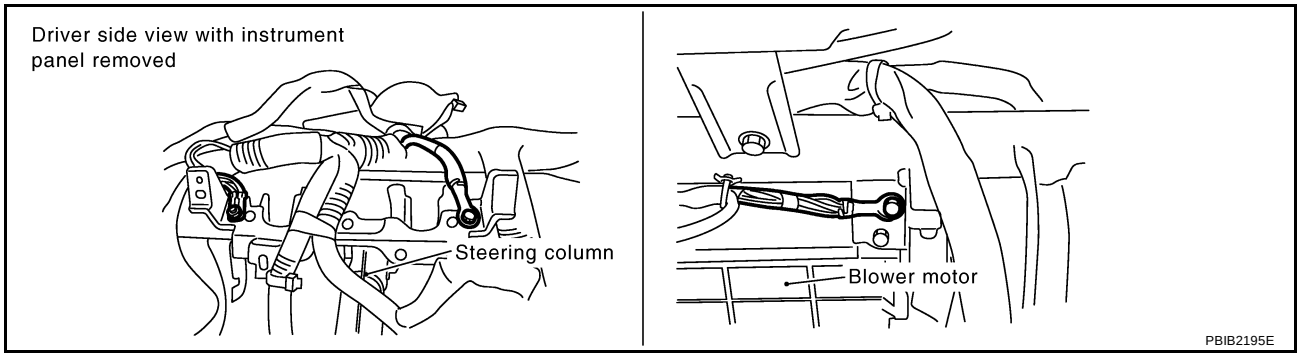

OK or NG

OK >> GO TO 2.
NG >> Repair or replace ground connections.

2. RETIGHTEN HEATED OXYGEN SENSOR 1

Loosen and retighten heated oxygen sensor 1.

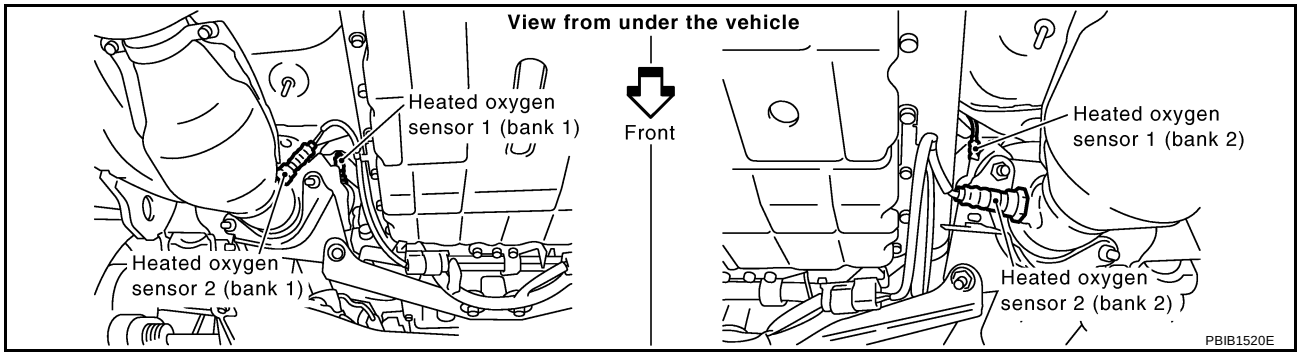

Tightening torque: 50 N·m (5.1 kg-m, 37 ft-lb)

>> GO TO 3.

3. CHECK FOR EXHAUST GAS LEAK

1. Start engine and run it at idle.
2. Listen for an exhaust gas leak before three way catalyst (manifold).

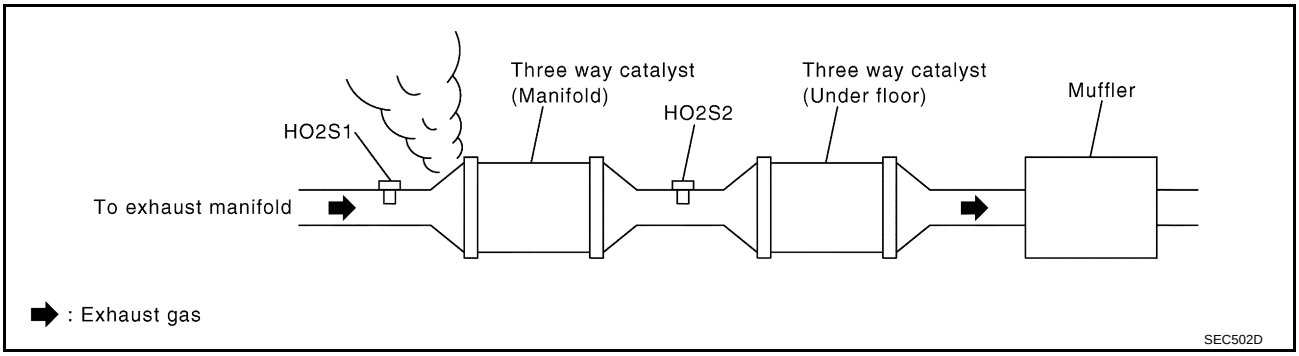

OK or NG

OK >> GO TO 4.
NG >> Repair or replace.

4. CHECK FOR INTAKE AIR LEAK

Listen for an intake air leak after the mass air flow sensor.

OK or NG

OK >> GO TO 5.
NG >> Repair or replace.

5. CLEAR THE SELF-LEARNING DATA

With CONSULT-II

1. Start engine and warm it up to normal operating temperature.
2. Select “SELF-LEARNING CONT” in “WORK SUPPORT” mode with CONSULT-II.
3. Clear the self-learning control coefficient by touching “CLEAR”.
4. Run engine for at least 10 minutes at idle speed.
   Is the 1st trip DTC P0171, P0172, P0174 or P0175 detected?
   Is it difficult to start engine?

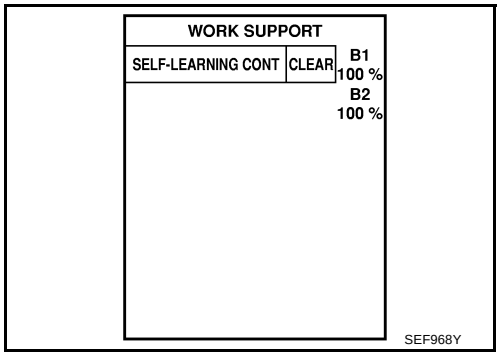

Without CONSULT-II

1. Start engine and warm it up to normal operating temperature.
2. Turn ignition switch OFF.
3. Disconnect mass air flow sensor harness connector, and restart and run engine for at least 5 seconds at idle speed.
4. Stop engine and reconnect mass air flow sensor harness connector.
5. Make sure DTC P0102 is displayed.
6. Erase the DTC memory. Refer to EC-758, "HOW TO ERASE EMISSION-RELATED DIAGNOSTIC INFORMATION" .
7. Make sure DTC P0000 is displayed.
8. Run engine for at least 10 minutes at idle speed.
   Is the 1st trip DTC P0171, P0172, P0174 or P0175 detected?
   Is it difficult to start engine?

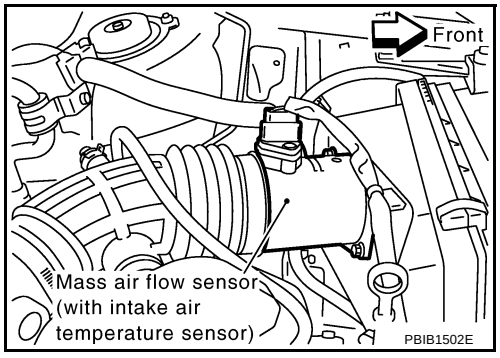

Yes or No

Yes >> Perform trouble diagnosis for DTC P0171, P0174 or P0172, P0175 (Refer to EC-986 or EC-995).

No >> GO TO 6.

6. CHECK HO2S1 GROUND CIRCUIT FOR OPEN AND SHORT

1. Turn ignition switch OFF.
2. Disconnect heated oxygen sensor 1 harness connector.

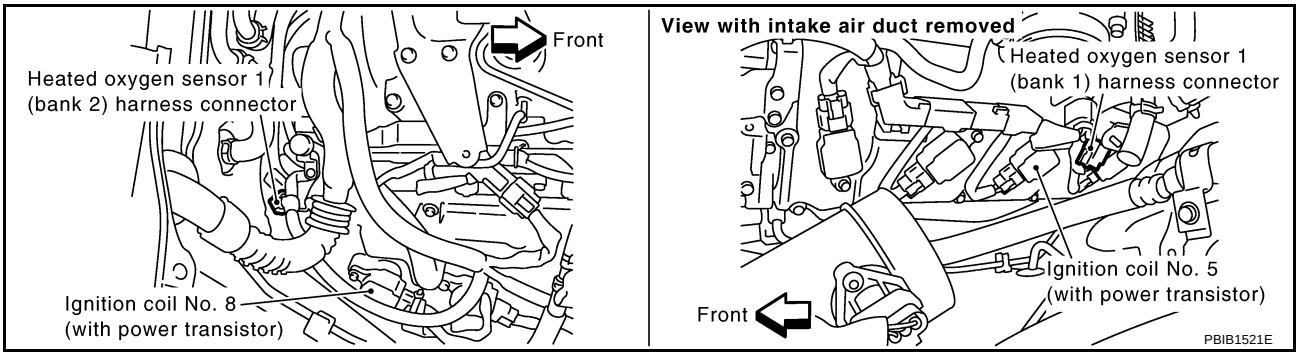

3. Disconnect ECM harness connector.
4. Check harness continuity between HO2S1 terminal 4 and ECM terminal 78.
   Refer to Wiring Diagram.

   Continuity should exist.

5. Also check harness for short to ground and short to power.

OK or NG

OK >> GO TO 7.
NG >> Repair open circuit or short to ground or short to power in harness or connectors.

7. CHECK HO2S1 INPUT SIGNAL CIRCUIT FOR OPEN AND SHORT

1. Check harness continuity between ECM terminal and HO2S1 terminal as follows.
   Refer to Wiring Diagram.

DTC	Terminals		Bank
	ECM	Sensor	
P0133	16	1	1
P0153	35	1	2

Continuity should exist.

2. Check harness continuity between the following terminals and ground.
   Refer to Wiring Diagram.

DTC	Terminals		Bank
	ECM	Sensor	
P0133	16	1	1
P0153	35	1	2

Continuity should not exist.

3. Also check harness for short to power.

OK or NG

OK >> GO TO 8.
NG >> Repair open circuit or short to ground or short to power in harness or connectors.

8. CHECK MASS AIR FLOW SENSOR

Refer to EC-900, "Component Inspection" .

OK or NG

OK >> GO TO 9.
NG >> Replace mass air flow sensor.

9. CHECK PCV VALVE

Refer to EC-742, "Component Inspection" .

OK or NG

OK >> GO TO 10.
NG >> Replace PCV valve.

10. CHECK HEATED OXYGEN SENSOR 1

Refer to EC-954, "Component Inspection" .

OK or NG

OK >> GO TO 11.
NG >> Replace malfunctioning heated oxygen sensor 1.

11. CHECK INTERMITTENT INCIDENT

Refer to EC-854, "TROUBLE DIAGNOSIS FOR INTERMITTENT INCIDENT" .

>> **INSPECTION END**

Component Inspection

ABS007LB

HEATED OXYGEN SENSOR 1

With CONSULT-II

1. Start engine and warm it up to normal operating temperature.
2. Select “MANU TRIG” and adjust “TRIGGER POINT” to 100% in “DATA MONITOR” mode with CONSULT-II.
3. Select “HO2S1 (B1)/(B2)” and “HO2S1 MNTR (B1)/(B2)”.
4. Hold engine speed at 2,000 rpm under no load during the following steps.
5. Touch “RECORD” on CONSULT-II screen.

DATA MONITOR	
MONITOR	NO DTC
ENG SPEED	XXX rpm
MAS A/F SE-B1	XXX V
COOLAN TEMP/S	XXX °C
HO2S1 (B1)	XXX V
HO2S1 MNTR (B1)	LEAN

SEF646Y

6. Check the following.
   - "HO2S1 MNTR (B1)/(B2)" in "DATA MONITOR" mode changes from "RICH" to "LEAN" to "RICH" more than 5 times in 10 seconds.
     5 times (cycles) are counted as shown at right.
   - "HO2S1 (B1)/(B2)" voltage goes above 0.6V at least once.
   - "HO2S1 (B1)/(B2)" voltage goes below 0.3V at least once.
   - "HO2S1 (B1)/(B2)" voltage never exceeds 1.0V.

Bank 1					
cycle	1	2	3	4	5
HO2S1 MNTR (B1)	R-L-R-L-R-L-R-L-R-L-R				

Bank 2					
cycle	1	2	3	4	5
HO2S1 MNTR (B2)	R-L-R-L-R-L-R-L-R-L-R				

R means HO2S1 MNTR (B1)/(B2) indicates RICH

L means HO2S1 MNTR (B1)/(B2) indicates LEAN

SEF647Y

Trigger	ENG SPEED	HO2S1 (B1)
	rpm	V
XXX	XXX	XXX
XXX	XXX	XXX
XXX	XXX	XXX
XXX	XXX	XXX
XXX	XXX	XXX
XXX	XXX	XXX
XXX	XXX	XXX
XXX	XXX	XXX
XXX	XXX	XXX
XXX	XXX	XXX
XXX	XXX	XXX
XXX	XXX	XXX

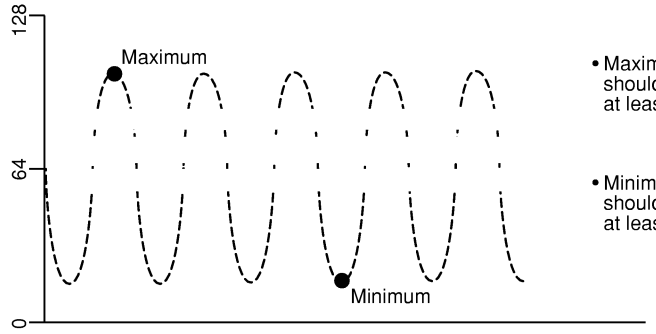

- Maximum voltage should be over 0.6V at least one time.
- Minimum voltage should be below 0.30V at least one time.

SEF648Y

CAUTION:

- **Discard any heated oxygen sensor which has been dropped from a height of more than 0.5 m (19.7 in) onto a hard surface such as a concrete floor; use a new one.**
- **Before installing new oxygen sensor, clean exhaust system threads using Oxygen Sensor Thread Cleaner tool J-43897-18 or J-43897-12 and approved anti-seize lubricant.**

Without CONSULT-II

1. Start engine and warm it up to normal operating temperature.
2. Set voltmeter probes between ECM terminal 16 [HO2S1 (B1) signal] or 35 [HO2S1 (B2) signal] and ground.
3. Check the following with engine speed held at 2,000 rpm constant under no load.
   - The voltage fluctuates between 0 to 0.3V and 0.6 to 1.0V more than 5 times within 10 seconds.
   - The maximum voltage is over 0.6V at least 1 time.
   - The minimum voltage is below 0.3V at least 1 time.
   - The voltage never exceeds 1.0V.

   1 time: 0 - 0.3V → 0.6 - 1.0V → 0 - 0.3V
   2 times: 0 - 0.3V → 0.6 - 1.0V → 0 - 0.3V → 0.6 - 1.0V → 0 - 0.3V

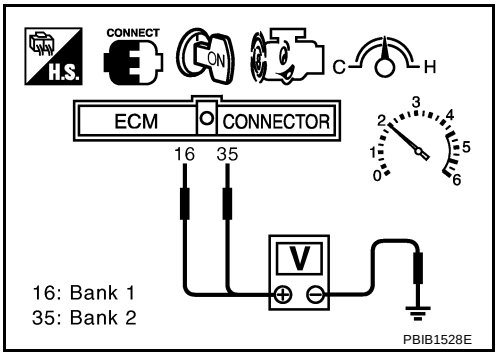

CAUTION:

- **Discard any heated oxygen sensor which has been dropped from a height of more than 0.5 m (19.7 in) onto a hard surface such as a concrete floor; use a new one.**
- **Before installing new oxygen sensor, clean exhaust system threads using Oxygen Sensor Thread Cleaner tool J-43897-18 or J-43897-12 and approved anti-seize lubricant.**

Removal and Installation

ABS007LC

HEATED OXYGEN SENSOR 1

Refer to EM-182, "EXHAUST MANIFOLD AND THREE WAY CATALYST" .

DTC P0134, P0154 HO2S1

PFP:22690

Component Description

ABS007LD

The heated oxygen sensor 1 is placed into the exhaust manifold. It detects the amount of oxygen in the exhaust gas compared to the outside air. The heated oxygen sensor 1 has a closed-end tube made of ceramic zirconia. The zirconia generates voltage from approximately 1V in richer conditions to 0V in leaner conditions. The heated oxygen sensor 1 signal is sent to the ECM. The ECM adjusts the injection pulse duration to achieve the ideal air-fuel ratio. The ideal air-fuel ratio occurs near the radical change from 1 to 0V.

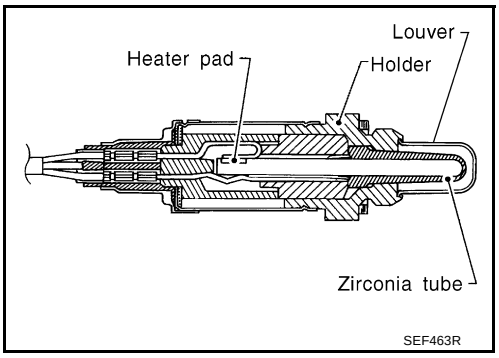

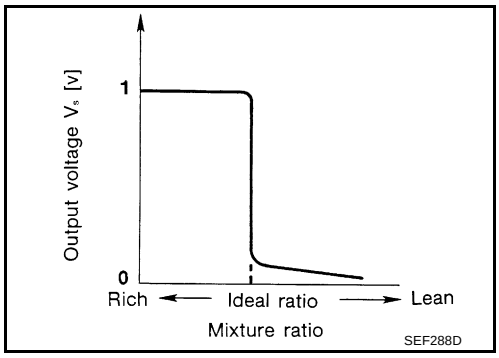

CONSULT-II Reference Value in Data Monitor Mode

ABS007LE

Specification data are reference values.

MONITOR ITEM	CONDITION		SPECIFICATION
HO2S1 (B1) HO2S1 (B2)	● Engine: After warming up	Maintaining engine speed at 2,000 rpm	0 - 0.3V ←→ Approx. 0.6 - 1.0V
HO2S1 MNTR (B1) HO2S1 MNTR (B2)			LEAN ←→ RICH Changes more than 5 times during 10 seconds.

On Board Diagnosis Logic

ABS007LF

Under the condition in which the heated oxygen sensor 1 signal is not input, the ECM circuits will read a continuous approximately 0.3V. Therefore, for this diagnosis, the time that output voltage is within 200 to 400 mV range is monitored, and the diagnosis checks that this time is not inordinately long.

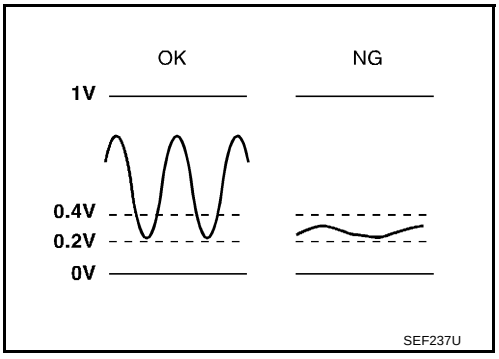

DTC No.	Trouble diagnosis name	DTC detecting condition	Possible cause
P0134 0134 (Bank 1)	Heated oxygen sensor 1 circuit no activity detected	The voltage from the sensor is constantly approx. 0.3V.	● Harness or connectors (The sensor circuit is open or shorted) ● Heated oxygen sensor 1
P0154 0154 (Bank 2)			

DTC Confirmation Procedure

ABS007LG

CAUTION:
Always drive vehicle at a safe speed.

NOTE:
If DTC Confirmation Procedure has been previously conducted, always turn ignition switch OFF and wait at least 10 seconds before conducting the next test.

TESTING CONDITION:
Before performing the following procedure, confirm that battery voltage is more than 11V at idle.

WITH CONSULT-II

1. Start engine and warm it up to normal operating temperature.
2. Select “HO2S1 (B1) P0134” or “HO2S1 (B2) P0154” of “HO2S1” in “DTC WORK SUPPORT” mode with CONSULT-II.
3. Touch “START”.
4. Let it idle for at least 3 minutes.

   NOTE:
   Do not raise engine speed above 3,000 rpm after this step. If the engine speed limit is exceeded, return to step 4.

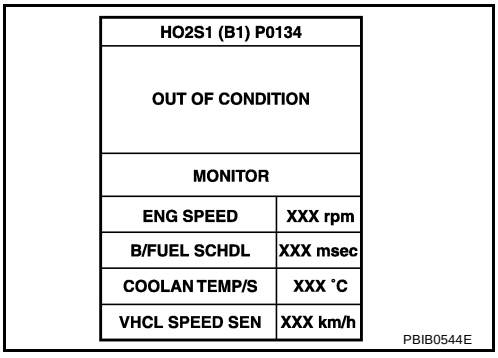

5. When the following conditions are met, “TESTING” will be displayed on the CONSULT-II screen. Maintain the conditions continuously until “TESTING” changes to “COMPLETED”. (It will take approximately 10 to 60 seconds.)

ENG SPEED	1,000 - 2,300 rpm
Vehicle speed	More than 64 km/h (40 MPH)
B/FUEL SCHDL	1.5 - 15.0 msec
Selector lever	Suitable position

   If “TESTING” is not displayed after 5 minutes, retry from step 2.

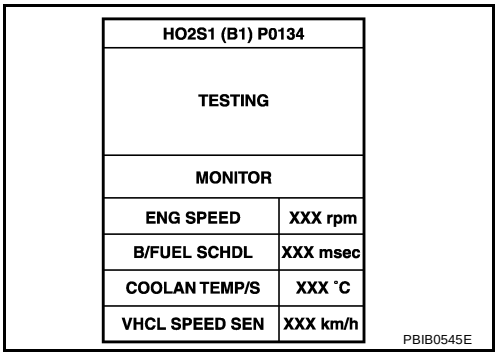

6. Make sure that “OK” is displayed after touching “SELF-DIAG RESULTS”. If “NG” is displayed, refer to EC-962, "Diagnostic Procedure" .

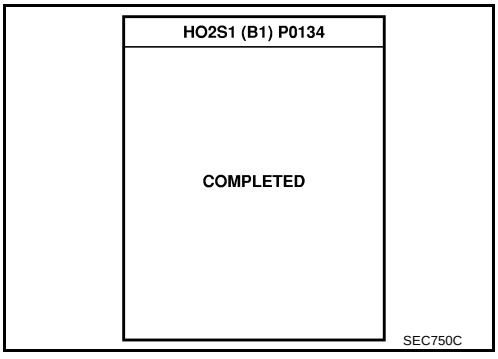

Overall Function Check

ABS007LH

Use this procedure to check the overall function of the heated oxygen sensor 1 circuit. During this check, a 1st trip DTC might not be confirmed.

WITH GST

1. Start engine and warm it up to normal operating temperature.
2. Set voltmeter probes between ECM terminal 16 [HO2S1 (B1) signal] or 35 [HO2S1 (B2) signal] and ground.
3. Check the following with engine speed held at 2,000 rpm constant under no load.
   - The voltage does not remain in the range of 0.2 to 0.4V.
4. If NG, go to EC-962, "Diagnostic Procedure" .

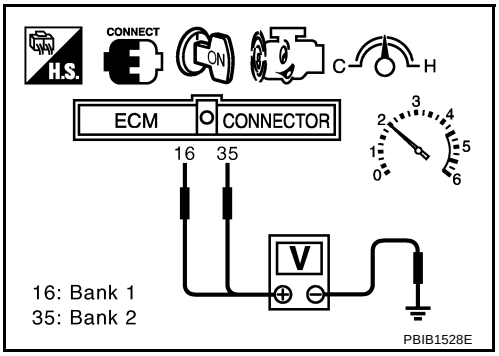

Wiring Diagram
BANK 1

ABS007LI

EC-O2S1B1-01

: DETECTABLE LINE FOR DTC
: NON-DETECTABLE LINE FOR DTC

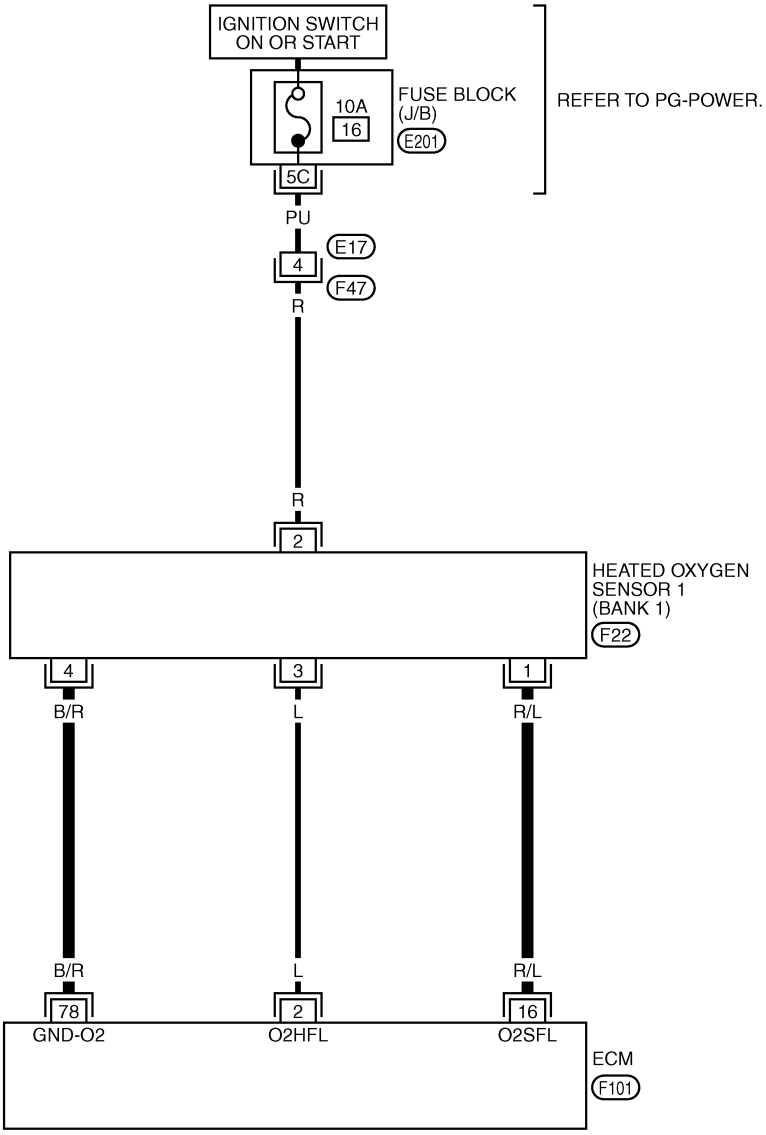

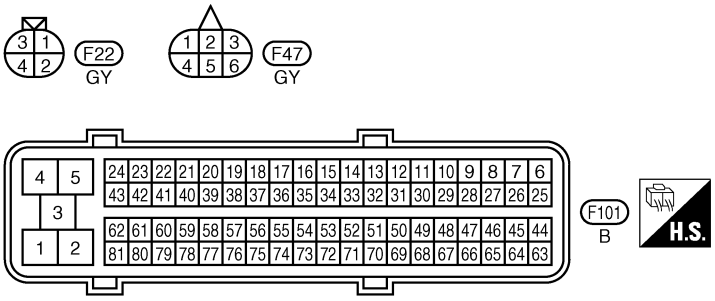

REFER TO THE FOLLOWING.
E201 -FUSE BLOCK-JUNCTION BOX (J/B)

TBWM0228E

Specification data are reference values and are measured between each terminal and ground.

CAUTION:

Do not use ECM ground terminals when measuring input/output voltage. Doing so may result in damage to the ECM's transistor. Use a ground other than ECM terminals, such as the ground.

TERMINAL NO.	WIRE COLOR	ITEM	CONDITION	DATA (DC Voltage)
16	R/L	Heated oxygen sensor 1 (bank 1)	**[Engine is running]** ● **Warm-up condition** ● Engine speed: 2,000 rpm	0 - Approximately 1.0V (Periodically change)
78	B/R	Sensor ground (Heated oxygen sensor)	**[Engine is running]** ● **Warm-up condition** ● Idle speed	Approximately 0V

BANK 2

EC-O2S1B2-01

: DETECTABLE LINE FOR DTC

: NON-DETECTABLE LINE FOR DTC

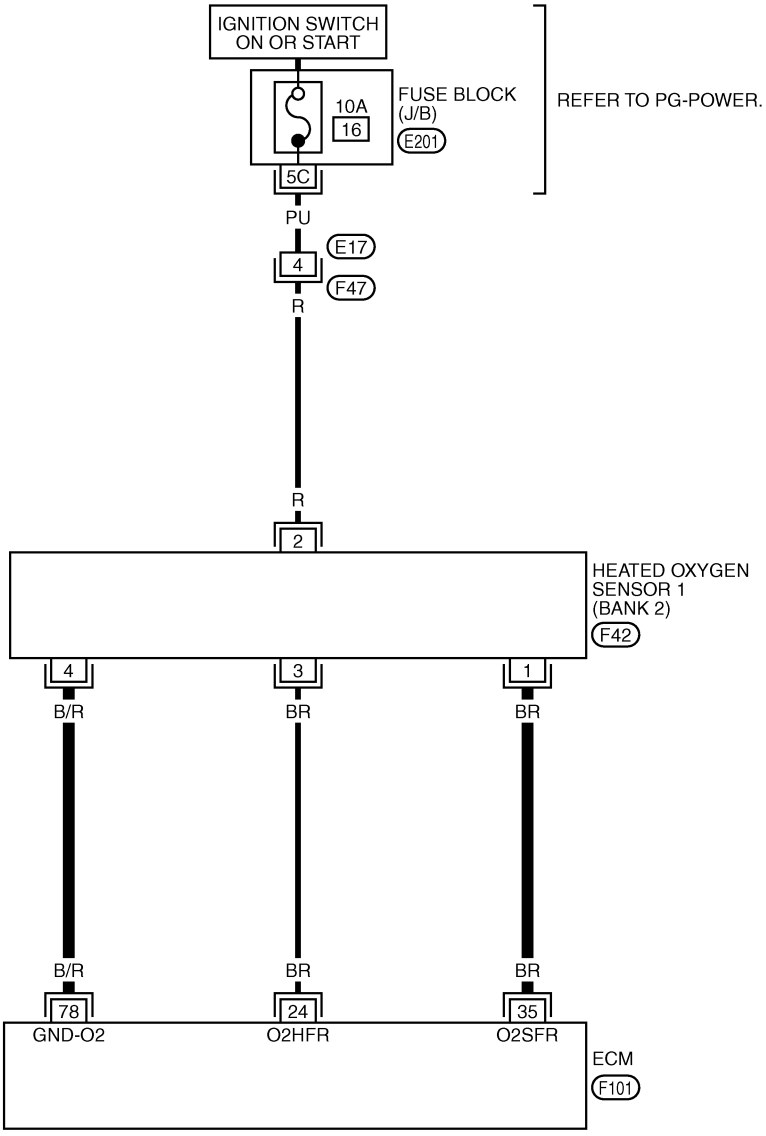

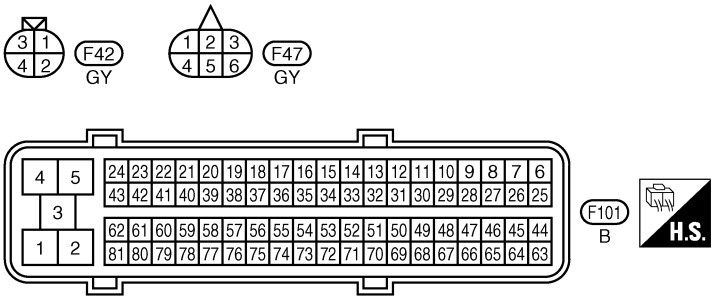

REFER TO THE FOLLOWING.

E201 -FUSE BLOCK-JUNCTION BOX (J/B)

TBWM0229E

Specification data are reference values and are measured between each terminal and ground.

CAUTION:

Do not use ECM ground terminals when measuring input/output voltage. Doing so may result in damage to the ECM's transistor. Use a ground other than ECM terminals, such as the ground.

TERMINAL NO.	WIRE COLOR	ITEM	CONDITION	DATA (DC Voltage)
35	BR	Heated oxygen sensor 1 (bank 2)	**[Engine is running]** ● **Warm-up condition** ● Engine speed:2,000 rpm	0 - Approximately 1.0V (Periodically change)
78	B/R	Sensor ground (Heated oxygen sensor)	**[Engine is running]** ● **Warm-up condition** ● Idle speed	Approximately 0V

Diagnostic Procedure

ABS007LJ

1. CHECK GROUND CONNECTIONS

1. Turn ignition switch OFF.
2. Loosen and retighten three ground screws on the body.
   Refer to EC-861, "Ground Inspection" .

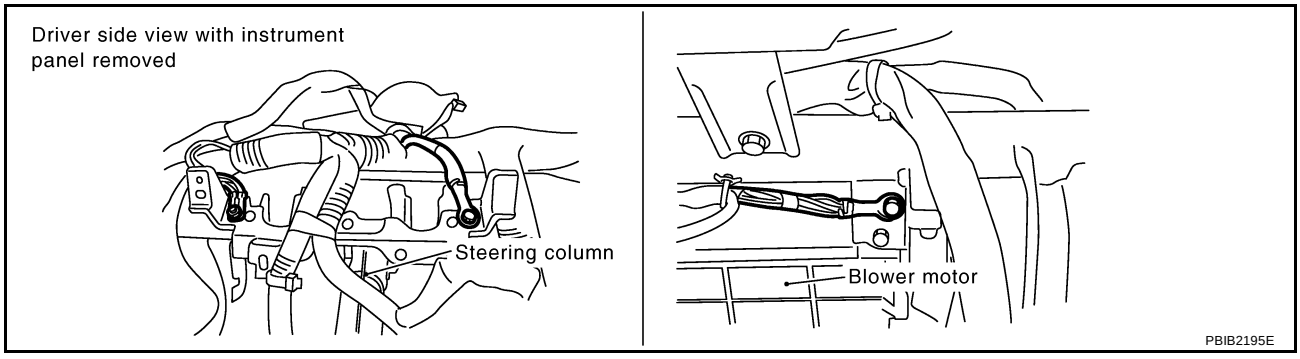

OK or NG

OK >> GO TO 2.
NG >> Repair or replace ground connections.

2. CHECK HO2S1 GROUND CIRCUIT FOR OPEN AND SHORT

1. Disconnect heated oxygen sensor 1 harness connector.

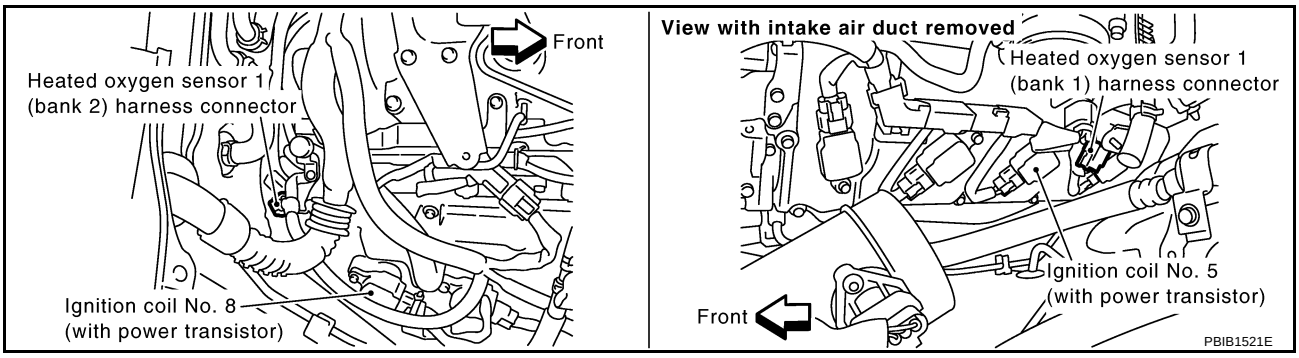

2. Disconnect ECM harness connector.
3. Check harness continuity between HO2S1 terminal 4 and ECM terminal 78.
   Refer to Wiring Diagram.

   Continuity should exist.

4. Also check harness for short to ground and short to power.

OK or NG

OK >> GO TO 3.
NG >> Repair open circuit or short to ground or short to power in harness or connectors.

3. CHECK HO2S1 INPUT SIGNAL CIRCUIT FOR OPEN AND SHORT

1. Check harness continuity between ECM terminal and HO2S1 terminal as follows.
   Refer to Wiring Diagram.

DTC	Terminals		Bank
	ECM	Sensor	
P0134	16	1	1
P0154	35	1	2

Continuity should exist.

2. Check harness continuity between the following terminals and ground.
   Refer to Wiring Diagram.

DTC	Terminals		Bank
	ECM	Sensor	
P0134	16	1	1
P0154	35	1	2

Continuity should not exist.

3. Also check harness for short to power.

OK or NG

OK >> GO TO 4.
NG >> Repair open circuit or short to ground or short to power in harness or connectors.

4. CHECK HEATED OXYGEN SENSOR 1

Refer to EC-964, "Component Inspection" .

OK or NG

OK >> GO TO 5.
NG >> Replace malfunctioning heated oxygen sensor 1.

5. CHECK INTERMITTENT INCIDENT

Refer to EC-854, "TROUBLE DIAGNOSIS FOR INTERMITTENT INCIDENT" .

>> **INSPECTION END**

Component Inspection

ABS007LK

HEATED OXYGEN SENSOR 1

With CONSULT-II

1. Start engine and warm it up to normal operating temperature.
2. Select “MANU TRIG” and adjust “TRIGGER POINT” to 100% in “DATA MONITOR” mode with CONSULT-II.
3. Select “HO2S1 (B1)/(B2)” and “HO2S1 MNTR (B1)/(B2)”.
4. Hold engine speed at 2,000 rpm under no load during the following steps.
5. Touch “RECORD” on CONSULT-II screen.

DATA MONITOR	
MONITOR	NO DTC
ENG SPEED	XXX rpm
MAS A/F SE-B1	XXX V
COOLAN TEMP/S	XXX °C
HO2S1 (B1)	XXX V
HO2S1 MNTR (B1)	LEAN

SEF646Y

6. Check the following.
   - “HO2S1 MNTR (B1)/(B2)” in “DATA MONITOR” mode changes from “RICH” to “LEAN” to “RICH” more than 5 times in 10 seconds.
     5 times (cycles) are counted as shown at right.
   - “HO2S1 (B1)/(B2)” voltage goes above 0.6V at least once.
   - “HO2S1 (B1)/(B2)” voltage goes below 0.3V at least once.
   - “HO2S1 (B1)/(B2)” voltage never exceeds 1.0V.

Bank 1

cycle	1	2	3	4	5
HO2S1 MNTR (B1)	R-L-R-L-R-L-R-L-R-L-R				

Bank 2

cycle	1	2	3	4	5
HO2S1 MNTR (B2)	R-L-R-L-R-L-R-L-R-L-R				

R means HO2S1 MNTR (B1)/(B2) indicates RICH

L means HO2S1 MNTR (B1)/(B2) indicates LEAN

SEF647Y

Trigger	ENG SPEED	HO2S1 (B1)
	rpm	V
XXX	XXX	XXX
XXX	XXX	XXX
XXX	XXX	XXX
XXX	XXX	XXX
XXX	XXX	XXX
XXX	XXX	XXX
XXX	XXX	XXX
XXX	XXX	XXX
XXX	XXX	XXX
XXX	XXX	XXX
XXX	XXX	XXX
XXX	XXX	XXX

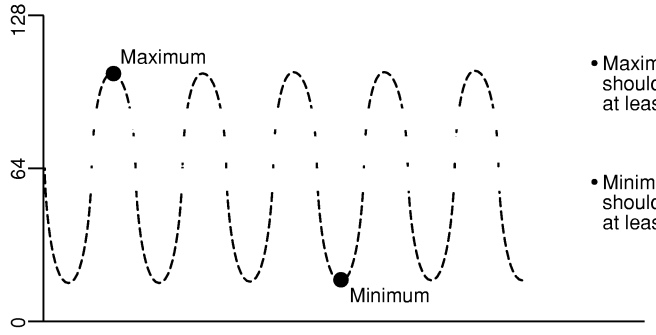

- Maximum voltage should be over 0.6V at least one time.
- Minimum voltage should be below 0.30V at least one time.

SEF648Y

CAUTION:

- **Discard any heated oxygen sensor which has been dropped from a height of more than 0.5 m (19.7 in) onto a hard surface such as a concrete floor; use a new one.**
- **Before installing new oxygen sensor, clean exhaust system threads using Oxygen Sensor Thread Cleaner tool J-43897-18 or J-43897-12 and approved anti-seize lubricant.**

Without CONSULT-II

1. Start engine and warm it up to normal operating temperature.

2. Set voltmeter probes between ECM terminal 16 [HO2S1 (B1) signal] or 35 [HO2S1 (B2) signal] and ground.
3. Check the following with engine speed held at 2,000 rpm constant under no load.
   - The voltage fluctuates between 0 to 0.3V and 0.6 to 1.0V more than 5 times within 10 seconds.
   - The maximum voltage is over 0.6V at least 1 time.
   - The minimum voltage is below 0.3V at least 1 time.
   - The voltage never exceeds 1.0V.

   1 time: 0 - 0.3V → 0.6 - 1.0V → 0 - 0.3V
   2 times: 0 - 0.3V → 0.6 - 1.0V → 0 - 0.3V → 0.6 - 1.0V → 0 - 0.3V

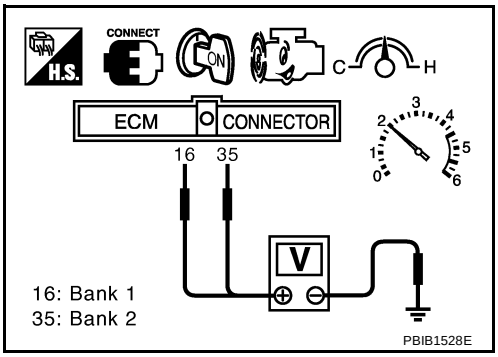

CAUTION:

- **Discard any heated oxygen sensor which has been dropped from a height of more than 0.5 m (19.7 in) onto a hard surface such as a concrete floor; use a new one.**
- **Before installing new oxygen sensor, clean exhaust system threads using Oxygen Sensor Thread Cleaner tool J-43897-18 or J-43897-12 and approved anti-seize lubricant.**

Removal and Installation

ABS007LL

HEATED OXYGEN SENSOR 1

Refer to EM-182, "EXHAUST MANIFOLD AND THREE WAY CATALYST"

DTC P0138, P0158 HO2S2

PFP:226A0

Component Description

ABS007LM

The heated oxygen sensor 2, after three way catalyst (manifold), monitors the oxygen level in the exhaust gas on each bank.
Even if switching characteristics of the heated oxygen sensor 1 are shifted, the air-fuel ratio is controlled to stoichiometric, by the signal from the heated oxygen sensor 2.
This sensor is made of ceramic zirconia. The zirconia generates voltage from approximately 1V in richer conditions to 0V in leaner conditions.
Under normal conditions the heated oxygen sensor 2 is not used for engine control operation.

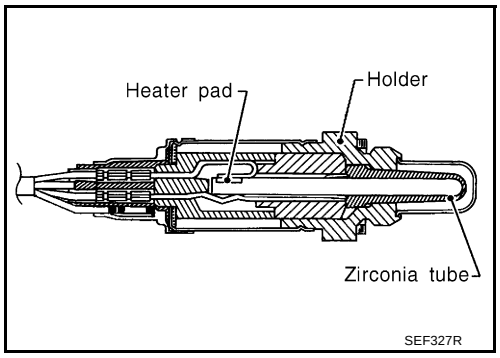

CONSULT-II Reference Value in Data Monitor Mode

ABS007LN

Specification data are reference values.

MONITOR ITEM	CONDITION		SPECIFICATION
HO2S2 (B1) HO2S2 (B2)	● Engine: After warming up ● After keeping engine speed between 3,500 and 4,000 rpm for 1 minute and at idle for 1 minute under no load	Revving engine from idle up to 3,000 rpm quickly.	0 - 0.3V ←→ Approx. 0.6 - 1.0V
HO2S2 MNTR (B1) HO2S2 MNTR (B2)			LEAN ←→ RICH

On Board Diagnosis Logic

ABS007LO

The heated oxygen sensor 2 has a much longer switching time between rich and lean than the heated oxygen sensor 1. The oxygen storage capacity of the three way catalyst (manifold) causes the longer switching time. To judge the malfunctions of heated oxygen sensor 2, ECM monitors whether the voltage is unusually high during the various driving condition such as fuel-cut.

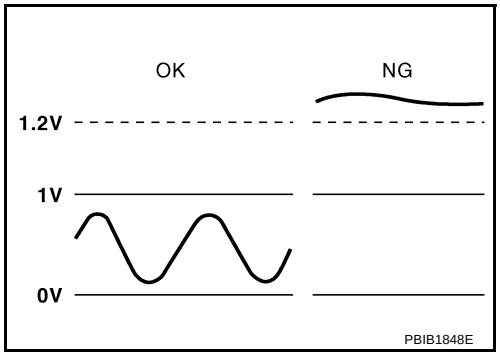

DTC No.	Trouble diagnosis name	DTC detecting condition	Possible cause
P0138 0138 (Bank 1)	Heated oxygen sensor 2 circuit high voltage	An excessively high voltage from the sensor is sent to ECM.	● Harness or connectors (The sensor circuit is open or shorted) ● Heated oxygen sensor 2
P0158 0158 (Bank 2)			

DTC Confirmation Procedure

ABS007LP

NOTE:
If DTC Confirmation Procedure has been previously conducted, always turn ignition switch OFF and wait at least 10 seconds before conducting the next test.

WITH CONSULT-II

1. Turn ignition switch ON and select “DATA MONITOR” mode with CONSULT-II.
2. Start engine and warm it up to the normal operating temperature.
3. Turn ignition switch OFF and wait at least 10 seconds.
4. Start engine and keep the engine speed between 3,500 and 4,000 rpm for at least 1 minute under no load.
5. Let engine idle for 2 minutes.
6. If 1st trip DTC is detected, go to EC-971, "Diagnostic Procedure".

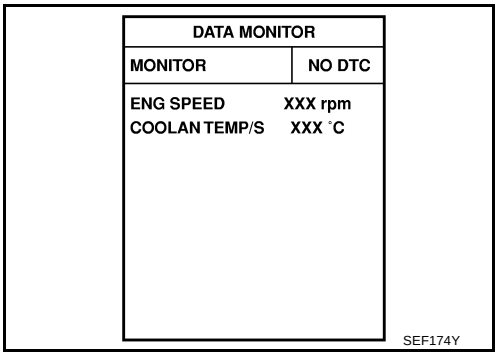

WITH GST

Follow the procedure “WITH CONSULT-II” above.

Wiring Diagram
BANK 1

ABS007LQ

EC-O2S2B1-01

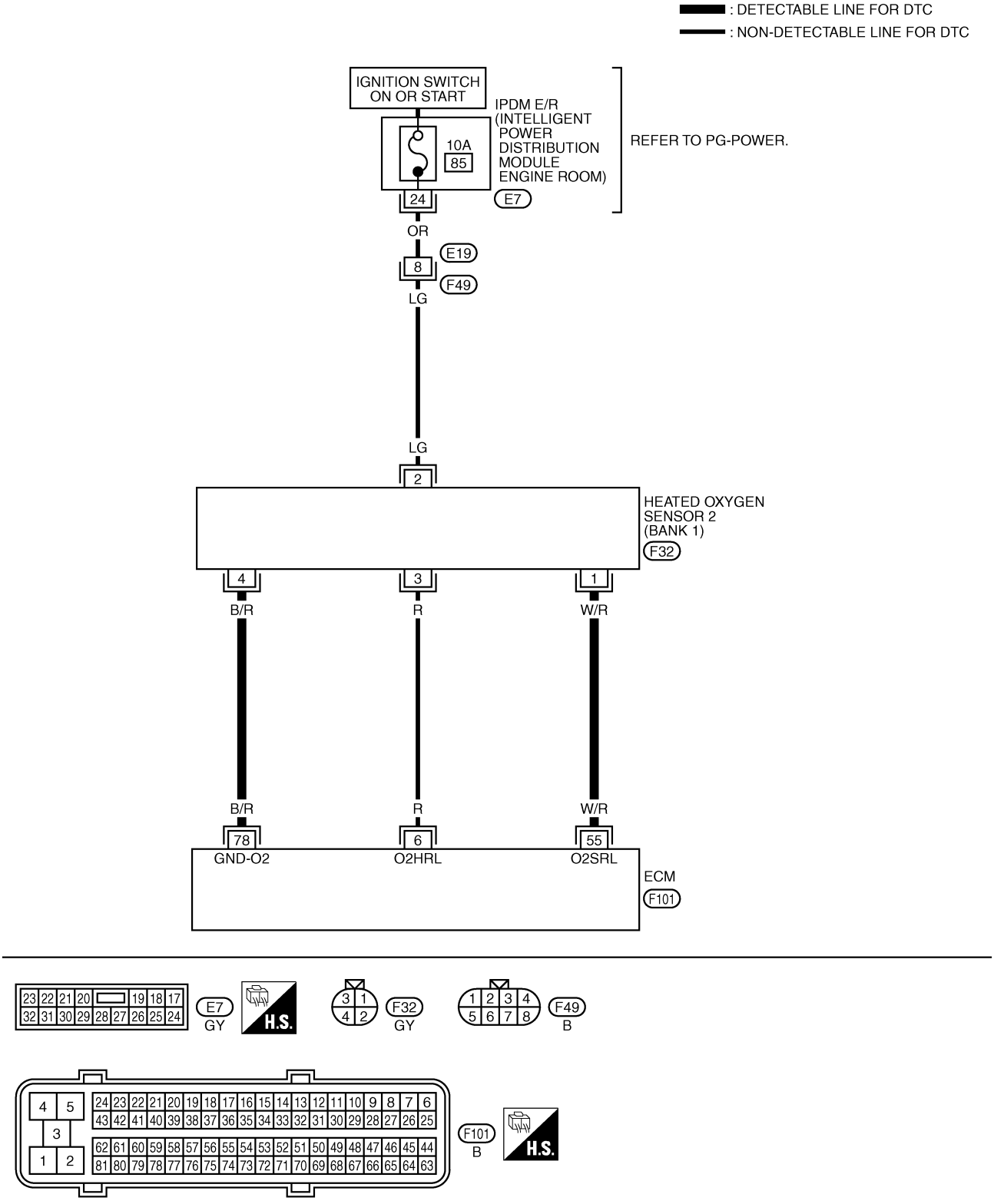

TBWM0230E

Specification data are reference values and are measured between each terminal and ground.

CAUTION:

Do not use ECM ground terminals when measuring input/output voltage. Doing so may result in damage to the ECM's transistor. Use a ground other than ECM terminals, such as the ground.

TERMINAL NO.	WIRE COLOR	ITEM	CONDITION	DATA (DC Voltage)
55	W/R	Heated oxygen sensor 2 (bank 1)	**[Engine is running]** ● **Warm-up condition** ● Revving engine from idle to 3,000 rpm quickly after the following conditions are met – After keeping the engine speed between 3,500 and 4,000 rpm for 1 minute and at idle for 1 minute under no load	0 - Approximately 1.0V
78	B/R	Sensor ground (Heated oxygen sensor)	**[Engine is running]** ● **Warm-up condition** ● Idle speed	Approximately 0V

BANK 2

EC-O2S2B2-01

: DETECTABLE LINE FOR DTC

: NON-DETECTABLE LINE FOR DTC

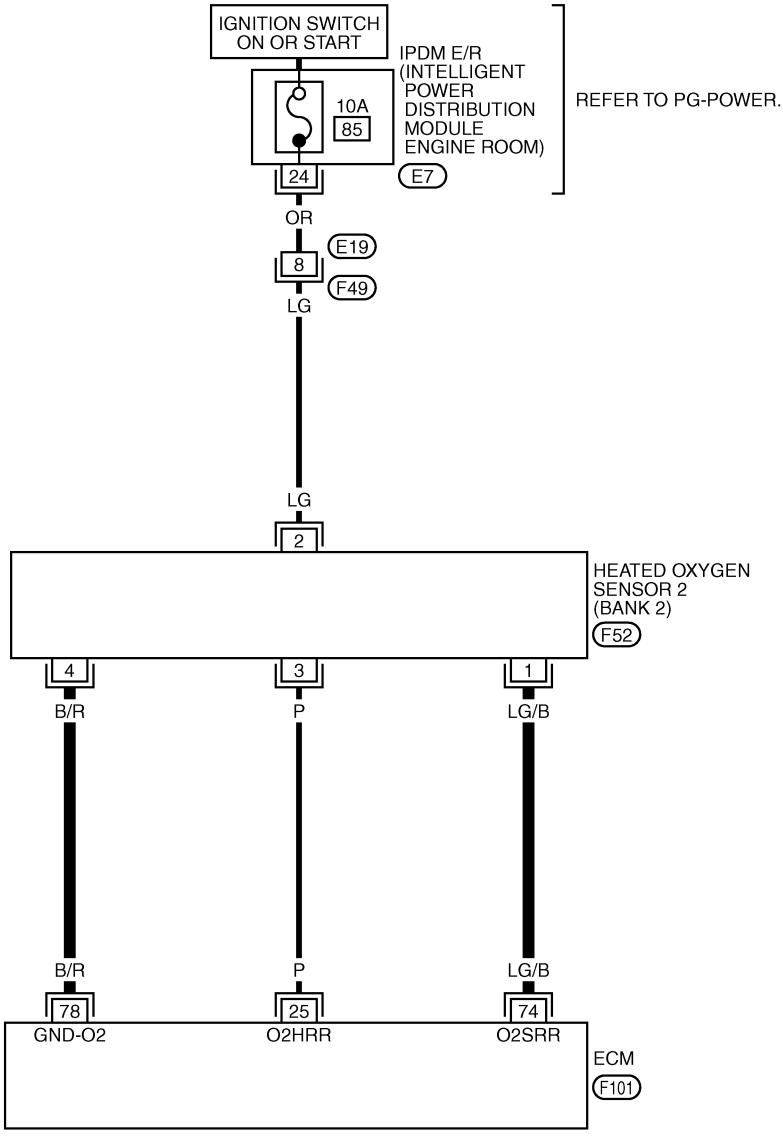

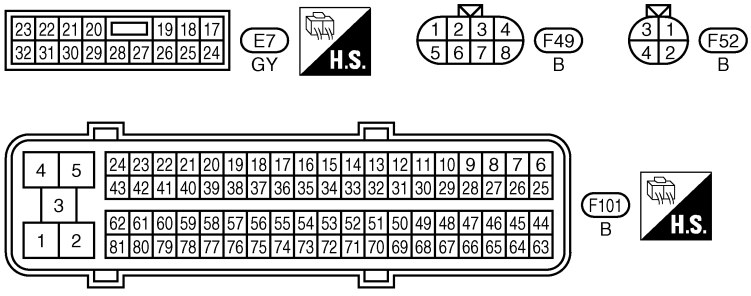

TBWM0231E

Specification data are reference values and are measured between each terminal and ground.

CAUTION:
Do not use ECM ground terminals when measuring input/output voltage. Doing so may result in damage to the ECM's transistor. Use a ground other than ECM terminals, such as the ground.

TERMINAL NO.	WIRE COLOR	ITEM	CONDITION	DATA (DC Voltage)
74	LG/B	Heated oxygen sensor 2 (bank 2)	**[Engine is running]** ● **Warm-up condition** ● Revving engine from idle to 3,000 rpm quickly after the following conditions are met – After keeping the engine speed between 3,500 and 4,000 rpm for 1 minute and at idle for 1 minute under no load	0 - Approximately 1.0V
78	B/R	Sensor ground (Heated oxygen sensor)	**[Engine is running]** ● **Warm-up condition** ● Idle speed	Approximately 0V

Diagnostic Procedure

ABS007LR

1. CHECK GROUND CONNECTIONS

1. Turn ignition switch OFF.
2. Loosen and retighten three ground screws on the body.
   Refer to EC-861, "Ground Inspection" .

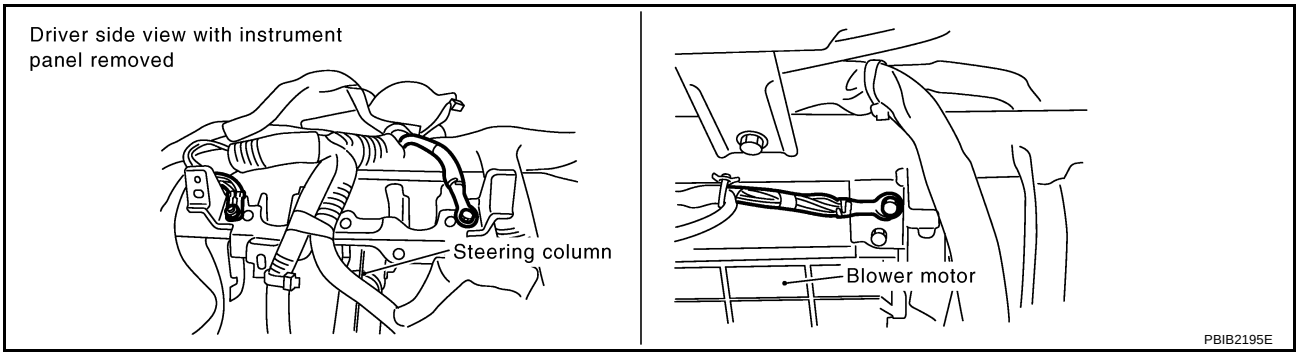

OK or NG

OK >> GO TO 2.
NG >> Repair or replace ground connections.

2. CHECK HO2S2 GROUND CIRCUIT FOR OPEN AND SHORT

1. Disconnect heated oxygen sensor 2 harness connector.

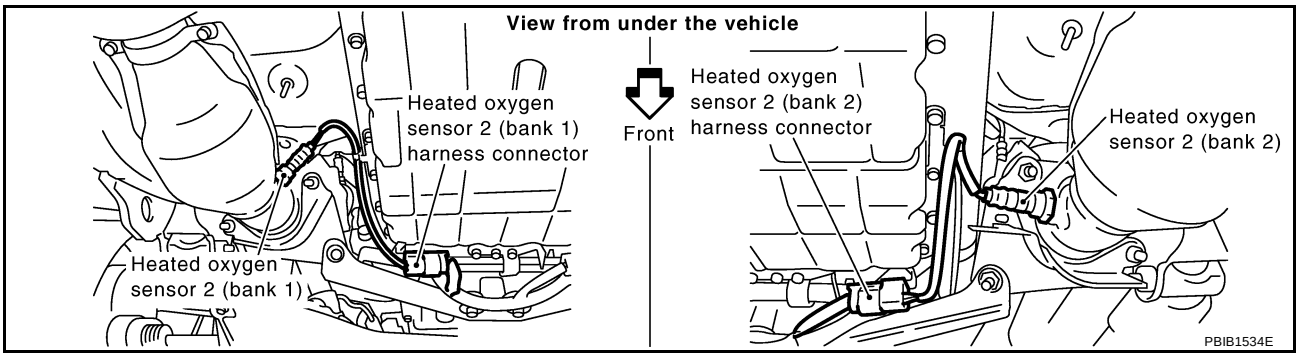

2. Disconnect ECM harness connector.
3. Check harness continuity between HO2S2 terminal 4 and ECM terminal 78.
   Refer to Wiring Diagram.

   Continuity should exist.

4. Also check harness for short to ground or short to power.

OK or NG

OK >> GO TO 3.
NG >> Repair open circuit or short to ground or short to power in harness or connectors.

3. CHECK HO2S2 INPUT SIGNAL CIRCUIT FOR OPEN AND SHORT

1. Check harness continuity between ECM terminal and HO2S2 terminal as follows.
   Refer to Wiring Diagram.

DTC	Terminals		Bank
	ECM	Sensor	
P0138	55	1	1
P0158	74	1	2

   Continuity should exist.

2. Check harness continuity between the following terminals and ground.
   Refer to Wiring Diagram.

DTC	Terminals		Bank
	ECM	Sensor	
P0138	55	1	1
P0158	74	1	2

   Continuity should not exist.

3. Also check harness for short to power.

OK or NG

OK >> GO TO 4.
NG >> Repair open circuit or short to ground or short to power in harness or connectors.

4. CHECK HO2S2 CONNECTOR FOR WATER

Check connectors for water.

Water should not exist.

OK or NG

OK >> GO TO 5.
NG >> Repair or replace harness or connectors.

5. CHECK HEATED OXYGEN SENSOR 2

Refer to EC-973, "Component Inspection" .

OK or NG

OK >> GO TO 6.
NG >> Replace malfunctioning heated oxygen sensor 2.

6. CHECK INTERMITTENT INCIDENT

Refer to EC-854, "TROUBLE DIAGNOSIS FOR INTERMITTENT INCIDENT" .

>> **INSPECTION END**

Component Inspection

ABS007LS

HEATED OXYGEN SENSOR 2

With CONSULT-II

1. Turn ignition switch ON and select “DATA MONITOR” mode with CONSULT-II.
2. Start engine and warm it up to the normal operating temperature.
3. Turn ignition switch OFF and wait at least 10 seconds.
4. Start engine and keep the engine speed between 3,500 and 4,000 rpm for at least 1 minute under no load.
5. Let engine idle for 1 minute.

DATA MONITOR	
MONITOR	NO DTC
ENG SPEED	XXX rpm
COOLAN TEMP/S	XXX °C

SEF174Y

6. Select “FUEL INJECTION” in “ACTIVE TEST” mode, and select “HO2S2 (B1)/(B2)” as the monitor item with CONSULT-II.

ACTIVE TEST	
FUEL INJECTION	25 %
MONITOR	
ENG SPEED	XXX rpm
HO2S1 (B1)	XXX V
HO2S2 (B1)	XXX V
HO2S1 MNTR (B1)	RICH
HO2S2 MNTR (B1)	RICH

SEF662Y

7. Check “HO2S2 (B1)/(B2)” at idle speed when adjusting “FUEL INJECTION” to ±25%.

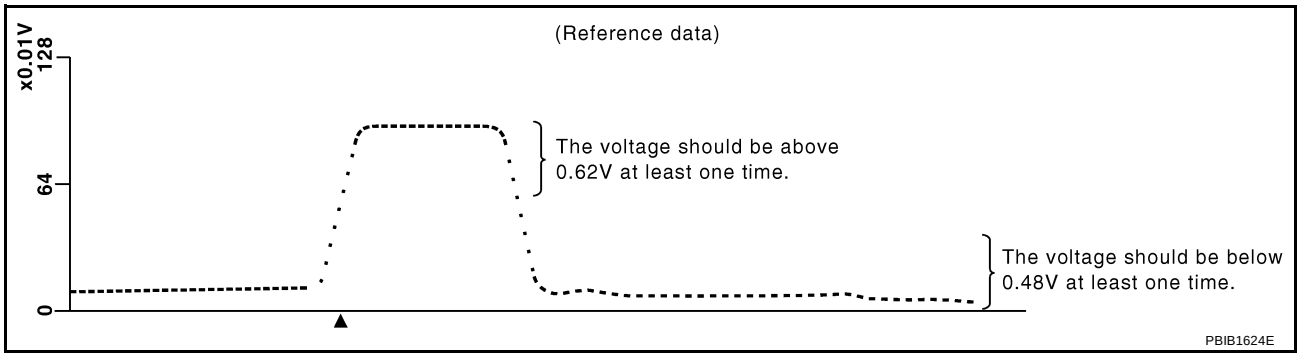

“HO2S2 (B1)/(B2)” should be above 0.62V at least once when the “FUEL INJECTION” is +25%.
“HO2S2 (B1)/(B2)” should be below 0.48V at least once when the “FUEL INJECTION” is –25%.

CAUTION:

- **Discard any heated oxygen sensor which has been dropped from a height of more than 0.5 m (19.7 in) onto a hard surface such as a concrete floor; use a new one.**
- **Before installing new oxygen sensor, clean exhaust system threads using Oxygen Sensor Thread Cleaner tool J-43897-18 or J-43897-12 and approved anti-seize lubricant.**

Without CONSULT-II

1. Start engine and warm it up to the normal operating temperature.
2. Turn ignition switch OFF and wait at least 10 seconds.
3. Start engine and keep the engine speed between 3,500 and 4,000 rpm for at least 1 minute under no load.
4. Let engine idle for 1 minute.
5. Set voltmeter probes between ECM terminal 55 [HO2S2 (B1) signal] or 74 [HO2S2 (B2) signal] and ground.
6. Check the voltage when revving up to 4,000 rpm under no load at least 10 times.
   (Depress and release accelerator pedal as soon as possible.)
   The voltage should be above 0.62V at least once during this procedure.
   If the voltage is above 0.62V at step 6, step 7 is not necessary.
7. Keep vehicle at idling for 10 minutes, then check voltage. Or check the voltage when coasting from 80 km/h (50 MPH) in D position.
   The voltage should be below 0.48V at least once during this procedure.

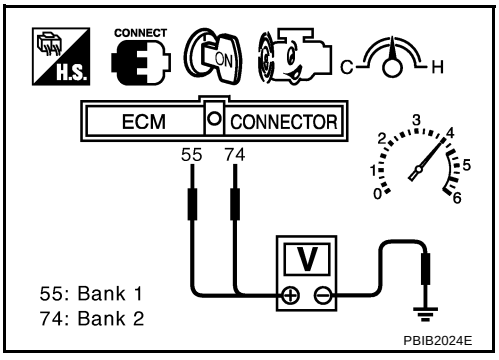

8. If NG, replace heated oxygen sensor 2.

CAUTION:

- **Discard any heated oxygen sensor which has been dropped from a height of more than 0.5 m (19.7 in) onto a hard surface such as a concrete floor; use a new one.**
- **Before installing new oxygen sensor, clean exhaust system threads (using Oxygen Sensor Thread Cleaner tool J-43897-18 or J-43897-12) and approved anti-seize lubricant.**

Removal and Installation

ABS007LT

HEATED OXYGEN SENSOR 2

Refer to EM-182, "EXHAUST MANIFOLD AND THREE WAY CATALYST" .

DTC P0139, P0159 HO2S2

PFP:226A0

Component Description

ABS007LU

The heated oxygen sensor 2, after three way catalyst (manifold), monitors the oxygen level in the exhaust gas on each bank.
Even if switching characteristics of the heated oxygen sensor 1 are shifted, the air-fuel ratio is controlled to stoichiometric, by the signal from the heated oxygen sensor 2.
This sensor is made of ceramic zirconia. The zirconia generates voltage from approximately 1V in richer conditions to 0V in leaner conditions.
Under normal conditions the heated oxygen sensor 2 is not used for engine control operation.

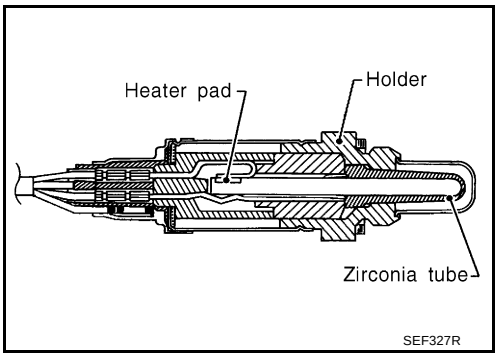

CONSULT-II Reference Value in Data Monitor Mode

ABS007LV

Specification data are reference values.

MONITOR ITEM	CONDITION		SPECIFICATION
HO2S2 (B1) HO2S2 (B2)	● Engine: After warming up ● After keeping engine speed between 3,500 and 4,000 rpm for 1 minute and at idle for 1 minute under no load	Revving engine from idle up to 3,000 rpm quickly.	0 - 0.3V ←→ Approx. 0.6 - 1.0V
HO2S2 MNTR (B1) HO2S2 MNTR (B2)			LEAN ←→ RICH

On Board Diagnosis Logic

ABS007LW

The heated oxygen sensor 2 has a much longer switching time between rich and lean than the heated oxygen sensor 1. The oxygen storage capacity of the three way catalyst (manifold) causes the longer switching time. To judge the malfunctions of heated oxygen sensor 2, ECM monitors whether the switching response of the sensor's voltage is faster than specified during the various driving condition such as fuel-cut.

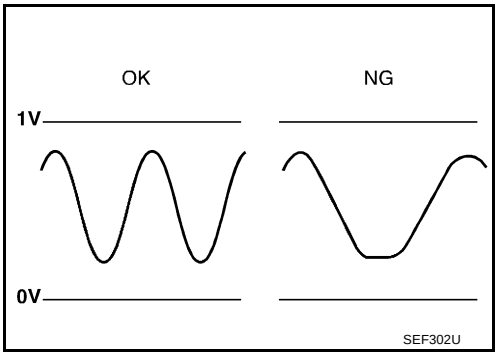

DTC No.	Trouble diagnosis name	DTC detecting condition	Possible cause
P0139 0139 (Bank 1)	Heated oxygen sensor 2 circuit slow response	It takes more time for the sensor to respond between rich and lean than the specified time.	● Harness or connectors (The sensor circuit is open or shorted) ● Heated oxygen sensor 2 ● Fuel pressure ● Fuel injector ● Intake air leaks
P0159 0159 (Bank 2)			

DTC Confirmation Procedure

ABS007LX

NOTE:
If DTC Confirmation Procedure has been previously conducted, always turn ignition switch OFF and wait at least 10 seconds before conducting the next test.

WITH CONSULT-II

TESTING CONDITION:
For better results, perform “DTC WORK SUPPORT” at a temperature of 0 to 30 °C (32 to 86 °F).

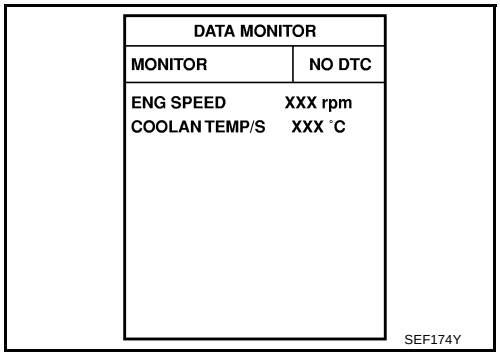

1. Turn ignition switch ON and select “DATA MONITOR” mode with CONSULT-II.
2. Start engine and warm it up to the normal operating temperature.
3. Turn ignition switch OFF and wait at least 10 seconds.
4. Start engine and keep the engine speed between 3,500 and 4,000 rpm for at least 1 minute under no load.
5. Let engine idle for 1 minute.
6. Make sure that “COOLAN TEMP/S” indicates more than 70°C (158°F).
   If not, warm up engine and go to next step when “COOLAN TEMP/S” indication reaches to 70°C (158°F).
7. Select “HO2S2 (B1) P0139” or “HO2S2 (B2) P0159” of “HO2S2” in “DTC WORK SUPPORT” mode with CONSULT-II.
8. Start engine and following the instruction of CONSULT-II.

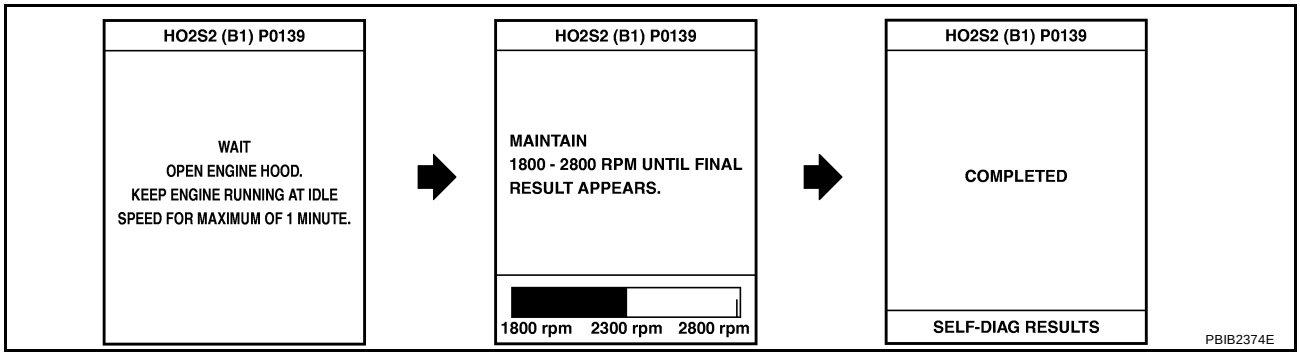

NOTE:
It will take at most 10 minutes until “COMPLETED” is displayed.

9. Make sure that “OK” is displayed after touching “SELF-DIAG RESULTS”.
   If “NG” is displayed, refer to EC-981, "Diagnostic Procedure" .
   If “CAN NOT BE DIAGNOSED” is displayed, perform the following.

a. Turn ignition switch OFF and leave the vehicle in a cool place (soak the vehicle).
b. Return to step 1.

Overall Function Check

ABS007LY

Use this procedure to check the overall function of the heated oxygen sensor 2 circuit. During this check, a 1st trip DTC might not be confirmed.

WITH GST

1. Start engine and warm it up to the normal operating temperature.
2. Turn ignition switch OFF and wait at least 10 seconds.
3. Start engine and keep the engine speed between 3,500 and 4,000 rpm for at least 1 minute under no load.
4. Let engine idle for 1 minute.
5. Set voltmeter probes between ECM terminal 55 [HO2S2 (B1) signal] or 74 [HO2S2 (B2) signal] and ground.

6. Check the voltage when revving up to 4,000 rpm under no load at least 10 times.
   (Depress and release accelerator pedal as soon as possible.)
   A change of voltage should be more than 0.06V for 1 second during this procedure.
   If the voltage can be confirmed in step 6, step 7 is not necessary.
7. Keep vehicle at idling for 10 minutes, then check the voltage. Or check the voltage when coasting from 80 km/h (50 MPH) in D position.
   A change of voltage should be more than 0.06V for 1 second during this procedure.
8. If NG, go to EC-981, "Diagnostic Procedure" .

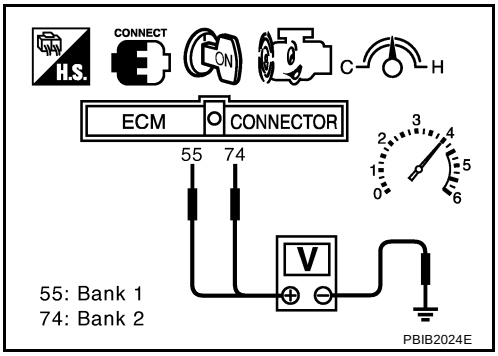

Wiring Diagram
BANK 1

ABS007LZ

EC-O2S2B1-01

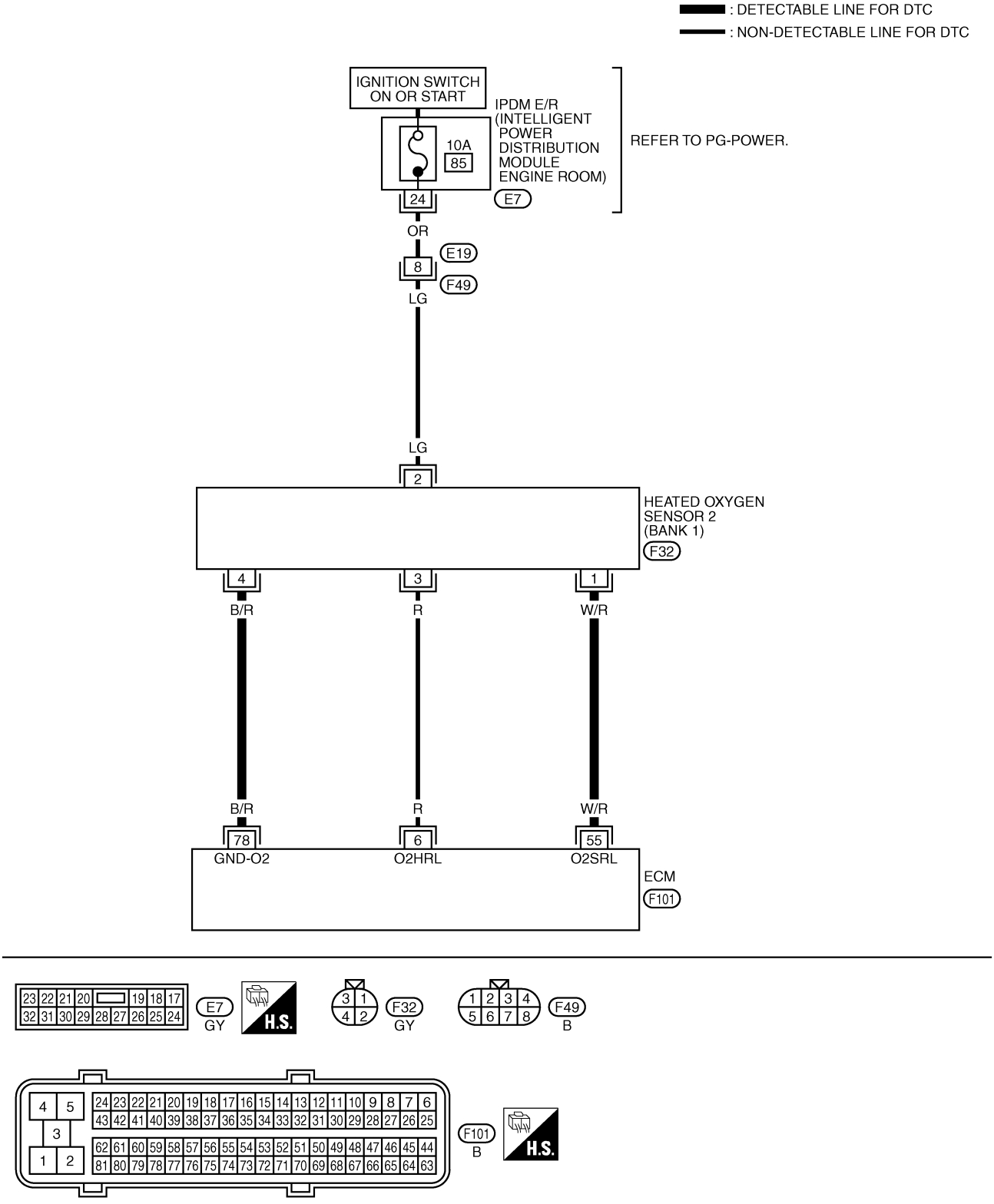

TBWM0230E

Specification data are reference values and are measured between each terminal and ground.

CAUTION:

Do not use ECM ground terminals when measuring input/output voltage. Doing so may result in damage to the ECM's transistor. Use a ground other than ECM terminals, such as the ground.

TERMINAL NO.	WIRE COLOR	ITEM	CONDITION	DATA (DC Voltage)
55	W/R	Heated oxygen sensor 2 (bank 1)	**[Engine is running]** ● **Warm-up condition** ● Revving engine from idle to 3,000 rpm quickly after the following conditions are met – After keeping the engine speed between 3,500 and 4,000 rpm for 1 minute and at idle for 1 minute under no load	0 - Approximately 1.0V
78	B/R	Sensor ground (Heated oxygen sensor)	**[Engine is running]** ● **Warm-up condition** ● Idle speed	Approximately 0V

BANK 2

EC-O2S2B2-01

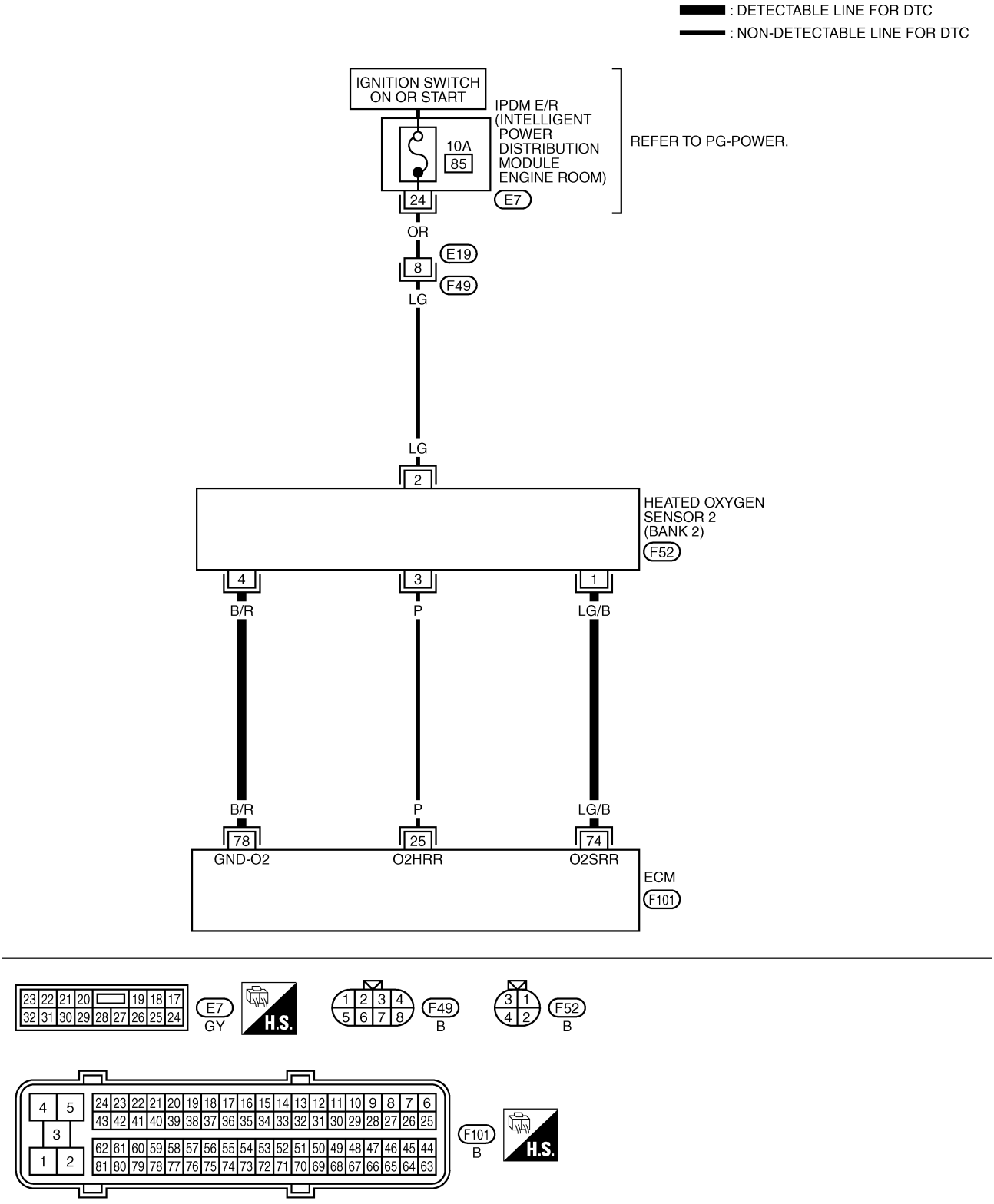

TBWM0231E

Specification data are reference values and are measured between each terminal and ground.

CAUTION:
Do not use ECM ground terminals when measuring input/output voltage. Doing so may result in damage to the ECM's transistor. Use a ground other than ECM terminals, such as the ground.

TERMINAL NO.	WIRE COLOR	ITEM	CONDITION	DATA (DC Voltage)
74	LG/B	Heated oxygen sensor 2 (bank 2)	**[Engine is running]** ● **Warm-up condition** ● Revving engine from idle to 3,000 rpm quickly after the following conditions are met – After keeping the engine speed between 3,500 and 4,000 rpm for 1 minute and at idle for 1 minute under no load	0 - Approximately 1.0V
78	B/R	Sensor ground (Heated oxygen sensor)	**[Engine is running]** ● **Warm-up condition** ● Idle speed	Approximately 0V

Diagnostic Procedure

ABS007M0

1. CHECK GROUND CONNECTIONS

1. Turn ignition switch OFF.
2. Loosen and retighten three ground screws on the body.
   Refer to EC-861, "Ground Inspection" .

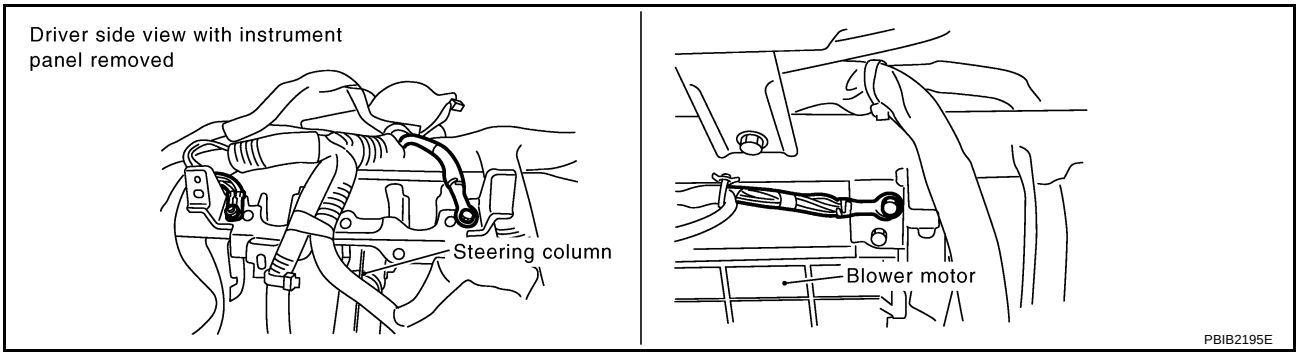

OK or NG

OK >> GO TO 2.
NG >> Repair or replace ground connections.

2. CLEAR THE SELF-LEARNING DATA

With CONSULT-II

1. Start engine and warm it up to normal operating temperature.
2. Select “SELF-LEARNING CONT” in “WORK SUPPORT” mode with CONSULT-II.
3. Clear the self-learning control coefficient by touching “CLEAR”.
4. Run engine for at least 10 minutes at idle speed.
   Is the 1st trip DTC P0171, P0172, P0174 or P0175 detected?
   Is it difficult to start engine?

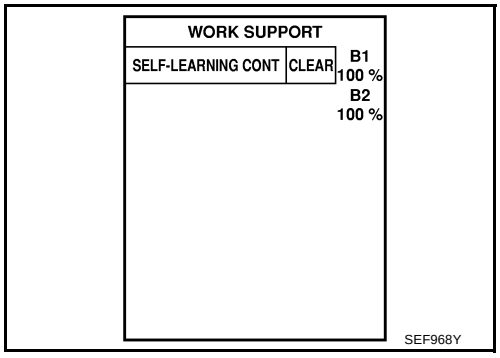

Without CONSULT-II

1. Start engine and warm it up to normal operating temperature.
2. Turn ignition switch OFF.
3. Disconnect mass air flow sensor harness connector, and restart and run engine for at least 5 seconds at idle speed.
4. Stop engine and reconnect mass air flow sensor harness connector.
5. Make sure DTC P0102 is displayed.
6. Erase the DTC memory. Refer to EC-758, "HOW TO ERASE EMISSION-RELATED DIAGNOSTIC INFORMATION" .
7. Make sure DTC P0000 is displayed.
8. Run engine for at least 10 minutes at idle speed.
   Is the 1st trip DTC P0171, P0172, P0174 or P0175 detected?
   Is it difficult to start engine?

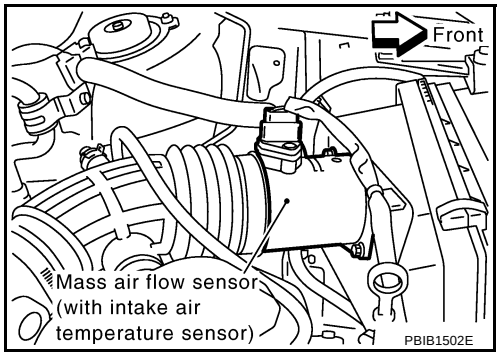

Yes or No

Yes >> Perform trouble diagnosis for DTC P0171, P0174 or P0172, P0175. Refer to EC-986 or EC-995 .
No >> GO TO 3.

3. CHECK HO2S2 GROUND CIRCUIT FOR OPEN AND SHORT

1. Turn ignition switch OFF.
2. Disconnect heated oxygen sensor 2 harness connector.

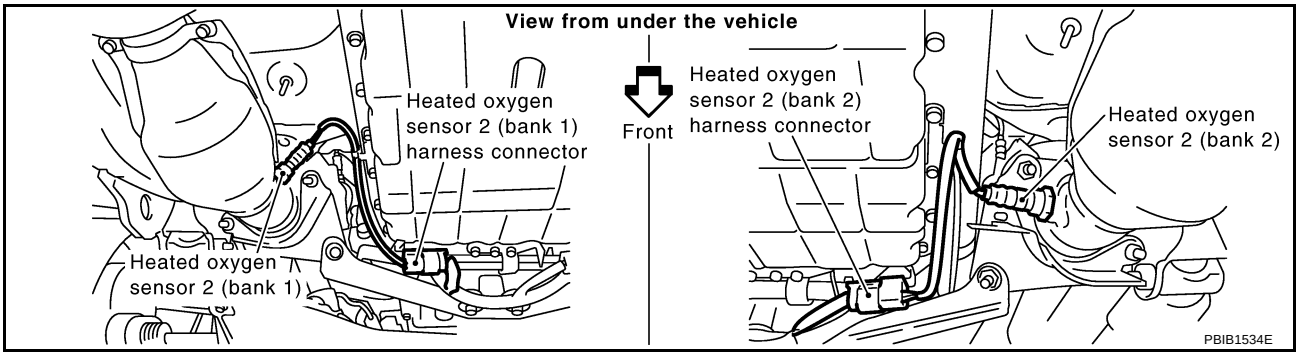

3. Disconnect ECM harness connector.
4. Check harness continuity between HO2S2 terminal 4 and ECM terminal 78.
   Refer to Wiring Diagram.

   Continuity should exist.

5. Also check harness for short to ground and short to power.

OK or NG

OK >> GO TO 4.
NG >> Repair open circuit or short to ground or short to power in harness or connectors.

4. CHECK HO2S2 INPUT SIGNAL CIRCUIT FOR OPEN AND SHORT

1. Check harness continuity between ECM terminal and HO2S2 terminal as follows.
   Refer to Wiring Diagram.

DTC	Terminals		Bank
	ECM	Sensor	
P0139	55	1	1
P0159	74	1	2

Continuity should exist.

2. Check harness continuity between the following terminals and ground.
   Refer to Wiring Diagram.

DTC	Terminals		Bank
	ECM	Sensor	
P0139	55	1	1
P0159	74	1	2

Continuity should not exist.

3. Also check harness for short to power.

OK or NG

OK >> GO TO 5.
NG >> Repair open circuit or short to ground or short to power in harness or connectors.

5. CHECK HEATED OXYGEN SENSOR 2

Refer to EC-984, "Component Inspection" .

OK or NG

OK >> GO TO 6.
NG >> Replace malfunctioning heated oxygen sensor 2.

6. CHECK INTERMITTENT INCIDENT

Refer to EC-854, "TROUBLE DIAGNOSIS FOR INTERMITTENT INCIDENT" .

>> **INSPECTION END**

Component Inspection

ABS007M1

HEATED OXYGEN SENSOR 2

With CONSULT-II

1. Turn ignition switch ON and select “DATA MONITOR” mode with CONSULT-II.
2. Start engine and warm it up to the normal operating temperature.
3. Turn ignition switch OFF and wait at least 10 seconds.
4. Start engine and keep the engine speed between 3,500 and 4,000 rpm for at least 1 minute under no load.
5. Let engine idle for 1 minute.

DATA MONITOR	
MONITOR	NO DTC
ENG SPEED	XXX rpm
COOLAN TEMP/S	XXX °C

SEF174Y

6. Select “FUEL INJECTION” in “ACTIVE TEST” mode, and select “HO2S2 (B1)/(B2)” as the monitor item with CONSULT-II.

ACTIVE TEST	
FUEL INJECTION	25 %
MONITOR	
ENG SPEED	XXX rpm
HO2S1 (B1)	XXX V
HO2S2 (B1)	XXX V
HO2S1 MNTR (B1)	RICH
HO2S2 MNTR (B1)	RICH

SEF662Y

7. Check “HO2S2 (B1)/(B2)” at idle speed when adjusting “FUEL INJECTION” to ±25%.

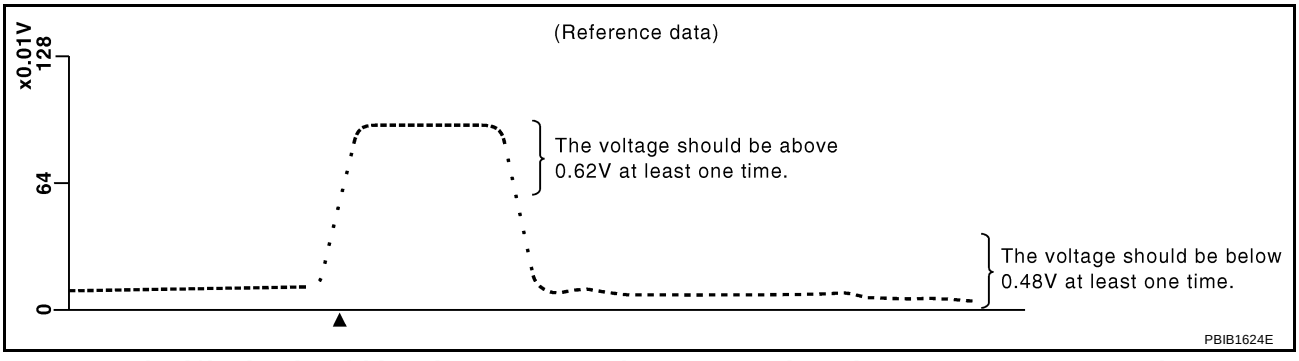

“HO2S2 (B1)/(B2)” should be above 0.62V at least once when the “FUEL INJECTION” is +25%.
“HO2S2 (B1)/(B2)” should be below 0.48V at least once when the “FUEL INJECTION” is –25%.

CAUTION:

- **Discard any heated oxygen sensor which has been dropped from a height of more than 0.5 m (19.7 in) onto a hard surface such as a concrete floor; use a new one.**

- **Before installing new oxygen sensor, clean exhaust system threads using Oxygen Sensor Thread Cleaner tool J-43897-18 or J-43897-12 and approved anti-seize lubricant.**

Without CONSULT-II

1. Start engine and warm it up to the normal operating temperature.
2. Turn ignition switch OFF and wait at least 10 seconds.
3. Start engine and keep the engine speed between 3,500 and 4,000 rpm for at least 1 minute under no load.
4. Let engine idle for 1 minute.
5. Set voltmeter probes between ECM terminal 55 [HO2S2 (B1) signal] or 74 [HO2S2 (B2) signal] and ground.
6. Check the voltage when revving up to 4,000 rpm under no load at least 10 times.
   (Depress and release accelerator pedal as soon as possible.)
   The voltage should be above 0.62V at least once during this procedure.
   If the voltage is above 0.62V at step 6, step 7 is not necessary.
7. Keep vehicle at idling for 10 minutes, then check voltage. Or check the voltage when coasting from 80 km/h (50 MPH) in D position.
   The voltage should be below 0.48V at least once during this procedure.

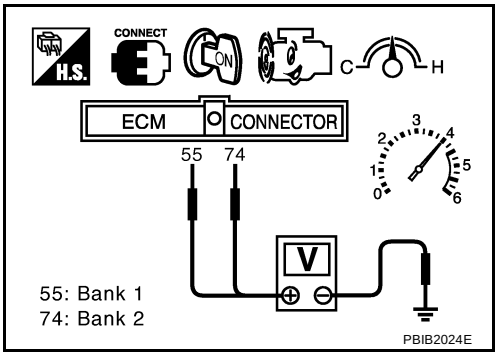

8. If NG, replace heated oxygen sensor 2.

CAUTION:

- **Discard any heated oxygen sensor which has been dropped from a height of more than 0.5 m (19.7 in) onto a hard surface such as a concrete floor; use a new one.**
- **Before installing new oxygen sensor, clean exhaust system threads using Oxygen Sensor Thread Cleaner tool J-43897-18 or J-43897-12 and approved anti-seize lubricant.**

Removal and Installation

ABS007M2

HEATED OXYGEN SENSOR 2

Refer to EM-182, "EXHAUST MANIFOLD AND THREE WAY CATALYST" .

DTC P0171, P0174 FUEL INJECTION SYSTEM FUNCTION

PFP:16600

On Board Diagnosis Logic

ABS00E50

With the Air-Fuel Mixture Ratio Self-Learning Control, the actual mixture ratio can be brought closely to the theoretical mixture ratio based on the mixture ratio feedback signal from the heated oxygen sensors 1. The ECM calculates the necessary compensation to correct the offset between the actual and the theoretical ratios.
In case the amount of the compensation value is extremely large (The actual mixture ratio is too lean.), the ECM judges the condition as the fuel injection system malfunction and lights up the MIL (2 trip detection logic).

Sensor	Input Signal to ECM	ECM function	Actuator
Heated oxygen sensor 1	Density of oxygen in exhaust gas (Mixture ratio feedback signal)	Fuel injection control	Fuel injector

DTC No.	Trouble diagnosis name	DTC detecting condition	Possible cause
P0171 0171 (Bank 1)	Fuel injection system too lean	● Fuel injection system does not operate properly. ● The amount of mixture ratio compensation is too large. (The mixture ratio is too lean.)	● Intake air leaks ● Heated oxygen sensor 1 ● Fuel injector ● Exhaust gas leaks ● Incorrect fuel pressure ● Lack of fuel ● Mass air flow sensor ● Incorrect PCV hose connection
P0174 0174 (Bank 2)			

DTC Confirmation Procedure

ABS00E51

NOTE:
If DTC Confirmation Procedure has been previously conducted, always turn ignition switch OFF and wait at least 10 seconds before conducting the next test.

WITH CONSULT-II

1. Start engine and warm it up to normal operating temperature.
2. Turn ignition switch OFF and wait at least 10 seconds.
3. Turn ignition switch ON and select “SELF-LEARNING CONT” in “WORK SUPPORT” mode with CONSULT-II.
4. Clear the self-learning control coefficient by touching “CLEAR”.
5. Select “DATA MONITOR” mode with CONSULT-II.
6. Start engine again and let it idle for at least 10 minutes.
   The 1st trip DTC P0171 or P0174 should be detected at this stage, if a malfunction exists. If so, go to EC-990, "Diagnostic Procedure" .

   NOTE:
   If 1st trip DTC is not detected during above procedure, performing the following procedure is advised.

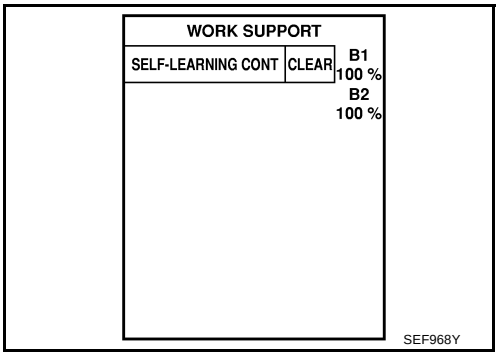

a. Turn ignition switch OFF and wait at least 10 seconds.
b. Start engine and drive the vehicle under the similar conditions to (1st trip) Freeze Frame Data for 10 minutes. Refer to the table below.
   Hold the accelerator pedal as steady as possible.

   The similar conditions to (1st trip) Freeze Frame Data means the vehicle operation that the following conditions should be satisfied at the same time.

Engine speed	Engine speed in the freeze frame data ± 400 rpm
Vehicle speed	Vehicle speed in the freeze frame data ± 10 km/h (6 MPH)

Engine coolant temperature (T) condition	When the freeze frame data shows lower than 70 °C (158 °F), T should be lower than 70 °C (158 °F).
	When the freeze frame data shows higher than or equal to 70 °C (158 °F), T should be higher than or equal to 70 °C (158 °F).

7. If it is difficult to start engine at step 6, the fuel injection system has a malfunction, too.
8. Crank engine while depressing accelerator pedal. If engine starts, go to EC-990, "Diagnostic Procedure" . If engine does not start, check exhaust and intake air leak visually.

WITH GST

1. Start engine and warm it up to normal operating temperature.
2. Turn ignition switch OFF and wait at least 10 seconds.
3. Disconnect mass air flow sensor harness connector.
4. Restart engine and let it idle for at least 5 seconds.
5. Stop engine and reconnect mass air flow sensor harness connector.
6. Select Service $03 with GST. Make sure DTC P0102 is detected.
7. Select Service $04 with GST and erase the DTC P0102.
8. Start engine again and let it idle for at least 10 minutes.
9. Select Service $07 with GST. The 1st trip DTC P0171 or P0174 should be detected at this stage, if a malfunction exists. If so, go to EC-990, "Diagnostic Procedure" .

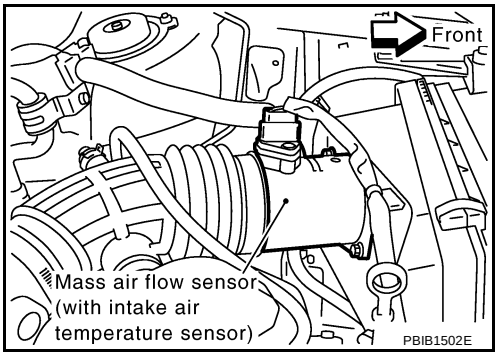

NOTE:
If 1st trip DTC is not detected during above procedure, performing the following procedure is advised.

a. Turn ignition switch OFF and wait at least 10 seconds.
b. Start engine and drive the vehicle under the similar conditions to (1st trip) Freeze Frame Data for 10 minutes. Refer to the table below.
Hold the accelerator pedal as steady as possible.

The similar conditions to (1st trip) Freeze Frame Data means the vehicle operation that the following conditions should be satisfied at the same time.

Engine speed	Engine speed in the freeze frame data ± 400 rpm
Vehicle speed	Vehicle speed in the freeze frame data ± 10 km/h (6 MPH)
Engine coolant temperature (T) condition	When the freeze frame data shows lower than 70 °C (158 °F), T should be lower than 70 °C (158 °F).
	When the freeze frame data shows higher than or equal to 70 °C (158 °F), T should be higher than or equal to 70 °C (158 °F).

10. If it is difficult to start engine at step 8, the fuel injection system has a malfunction.
11. Crank engine while depressing accelerator pedal. If engine starts, go to EC-990, "Diagnostic Procedure" . If engine does not start, check exhaust and intake air leak visually.

Wiring Diagram
BANK 1

ABS00E52

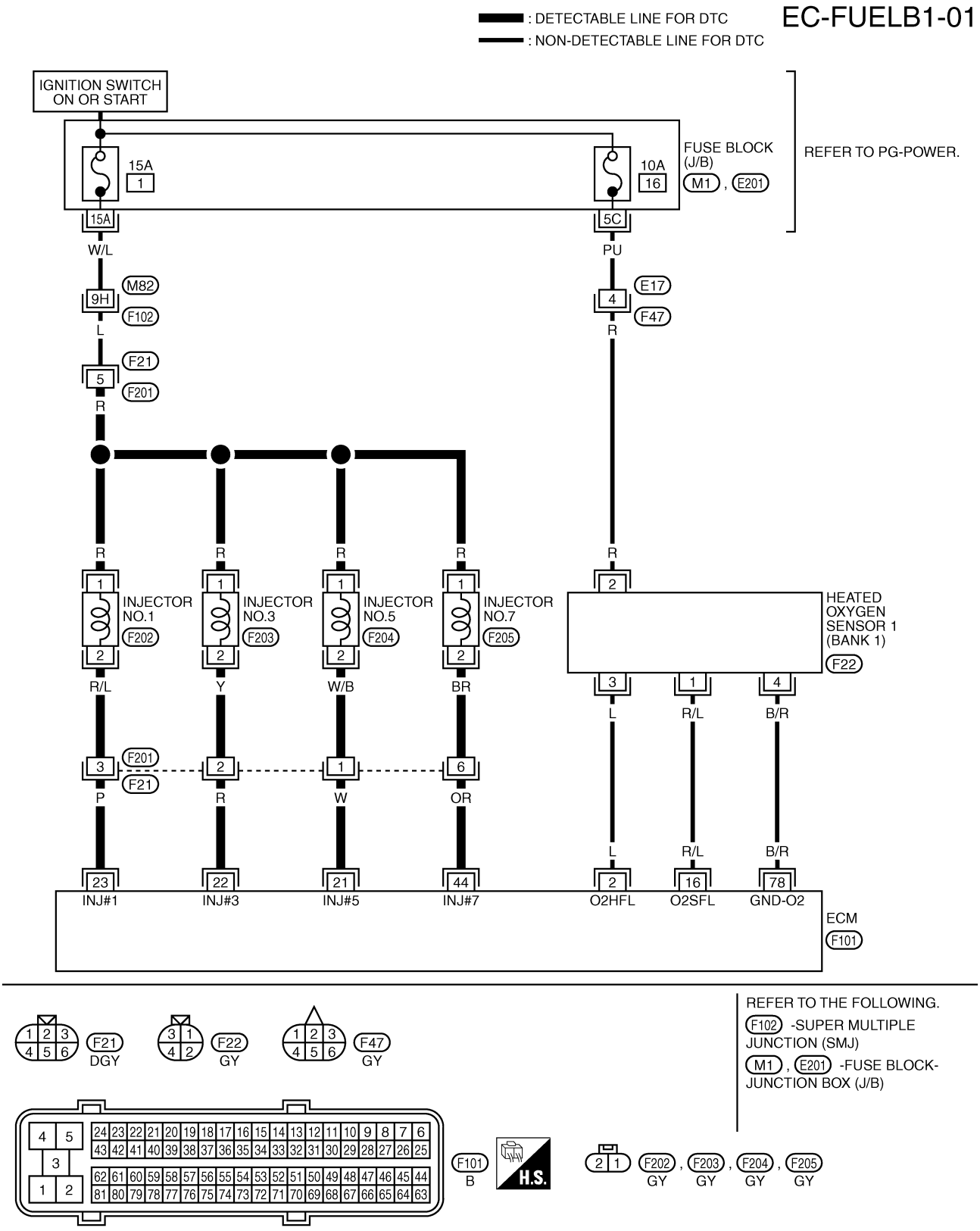

BANK 2

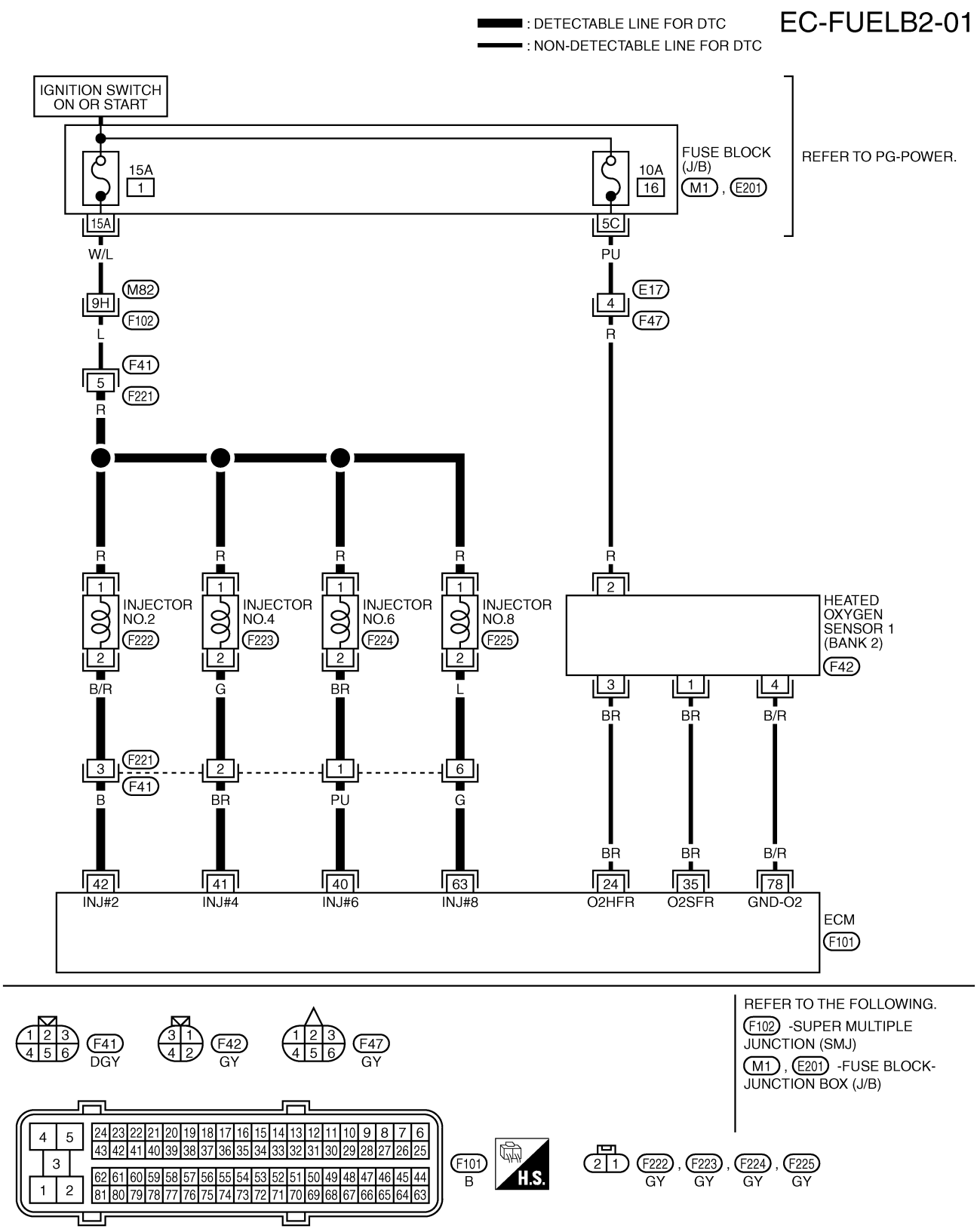
: DETECTABLE LINE FOR DTC
: NON-DETECTABLE LINE FOR DTC
EC-FUELB2-01
IGNITION SWITCH ON OR START
15A
1
10A
16
FUSE BLOCK (J/B)
M1 , E201
REFER TO PG-POWER.
15A
5C
W/L
PU
M82
9H
F102
L
E17
4
F47
R
F41
5
F221
R
R
R
R
R
R
INJECTOR NO.2
F222
INJECTOR NO.4
F223
INJECTOR NO.6
F224
INJECTOR NO.8
F225
B/R
G
BR
L
HEATED OXYGEN SENSOR 1 (BANK 2)
F42
BR
BR
B/R
F221
F41
B
BR
PU
G
BR
BR
B/R
42
41
40
63
24
35
78
INJ#2
INJ#4
INJ#6
INJ#8
O2HFR
O2SFR
GND-O2
ECM
F101
F41
DGY
F42
GY
F47
GY
REFER TO THE FOLLOWING.
F102 -SUPER MULTIPLE JUNCTION (SMJ)
M1 , E201 -FUSE BLOCK-JUNCTION BOX (J/B)
F101
B
H.S.
F222 , F223 , F224 , F225
GY GY GY GY
TBWM0233E

Diagnostic Procedure

ABS00E53

1. CHECK EXHAUST GAS LEAK

1. Start engine and run it at idle.
2. Listen for an exhaust gas leak before three way catalyst (manifold).

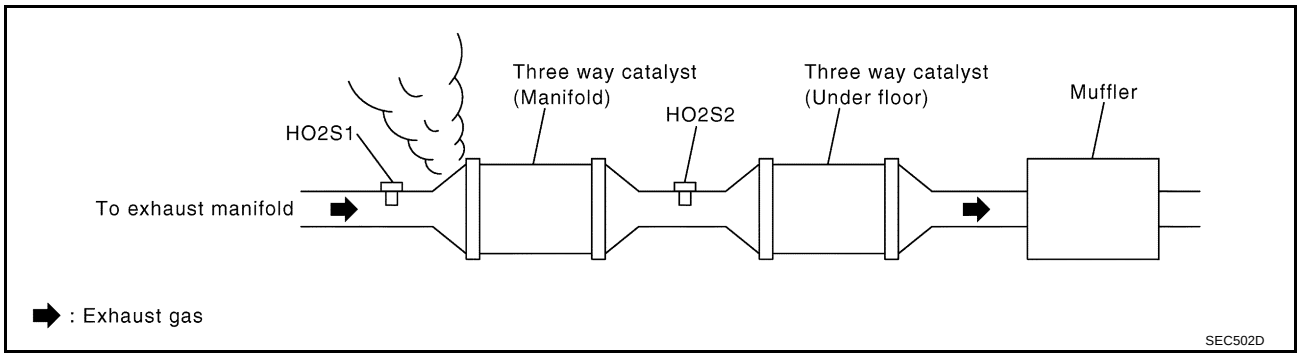

OK or NG

OK >> GO TO 2.
NG >> Repair or replace.

2. CHECK FOR INTAKE AIR LEAK

1. Listen for an intake air leak after the mass air flow sensor.
2. Check PCV hose connection.

OK or NG

OK >> GO TO 3.
NG >> Repair or replace.

3. CHECK HEATED OXYGEN SENSOR 1 CIRCUIT FOR OPEN AND SHORT

1. Turn ignition switch OFF.
2. Disconnect corresponding heated oxygen sensor 1 (HO2S1) harness connector.

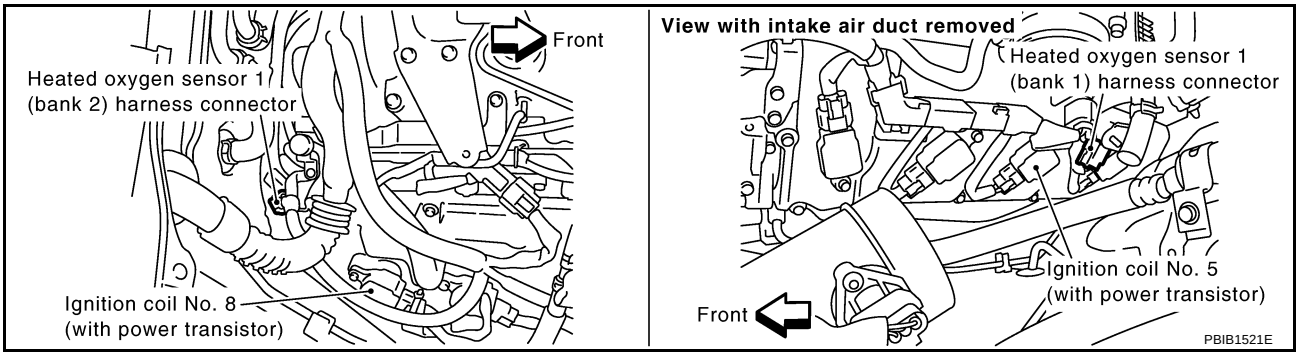

3. Disconnect ECM harness connector.
4. Check harness continuity between ECM terminal and HO2S1 terminal as follows.
   Refer to Wiring Diagram.

DTC	Terminals		Bank
	ECM	Sensor	
P0171	16	1	1
P0174	35	1	2

Continuity should exist.

5. Check harness continuity between the following terminals and ground.
   Refer to Wiring Diagram.

DTC	Terminals		Bank
	ECM	Sensor	
P0171	16	1	1
P0174	35	1	2

Continuity should not exist.

6. Check harness continuity between HO2S1 terminal 4 and ECM terminal 78.

Continuity should exist.

7. Also check harness for short to ground and short to power.

OK or NG

OK >> GO TO 4.
NG >> Repair open circuit or short to ground or short to power in harness or connectors.

4. CHECK FUEL PRESSURE

1. Release fuel pressure to zero. Refer to EC-789, "FUEL PRESSURE RELEASE" .
2. Install fuel pressure gauge and check fuel pressure. Refer to EC-789, "FUEL PRESSURE CHECK" .

At idling: 350 kPa (3.57 kg/cm^2 , 51 psi)

OK or NG

OK >> GO TO 6.
NG >> GO TO 5.

5. DETECT MALFUNCTIONING PART

Check the following.

- Fuel pump and circuit (Refer to EC-1358, "FUEL PUMP CIRCUIT" .)
- Fuel pressure regulator (Refer to EC-789, "FUEL PRESSURE CHECK" .)
- Fuel lines (Refer to FL-3, "Checking Fuel Lines" .)
- Fuel filter for clogging

>> Repair or replace.

6. CHECK MASS AIR FLOW SENSOR

With CONSULT-II

1. Install all removed parts.
2. Check “MASS AIR FLOW” in “DATA MONITOR” mode with CONSULT-II.

2.0 - 6.0 g·m/sec: at idling
7.0 - 20.0 g·m/sec: at 2,500 rpm

With GST

1. Install all removed parts.
2. Check mass air flow sensor signal in “Service $01” with GST.

2.0 - 6.0 g·m/sec: at idling
7.0 - 20.0 g·m/sec: at 2,500 rpm

OK or NG

OK (With CONSULT-II)>>GO TO 7.
OK (Without CONSULT-II)>>GO TO 8.
NG >> Check connectors for rusted terminals or loose connections in the mass air flow sensor circuit or grounds. Refer to EC-902, "DTC P0102, P0103 MAF SENSOR" .

7. CHECK FUNCTION OF INJECTOR

With CONSULT-II

1. Start engine.
2. Perform “POWER BALANCE” in “ACTIVE TEST” mode with CONSULT-II.
3. Make sure that each circuit produces a momentary engine speed drop.

ACTIVE TEST	
POWER BALANCE	
MONITOR	
ENG SPEED	XXX rpm
MAS A/F SE-B1	XXX V

PBIB0133E

OK or NG

OK >> GO TO 10.
NG >> Perform trouble diagnosis for EC-1351, "INJECTOR CIRCUIT" .

8. CHECK FUNCTION OF INJECTOR-I

Without CONSULT-II

1. Turn ignition switch OFF.
2. Disconnect harness connectors F21, F201 (bank 1) and F41, F221 (bank 2).

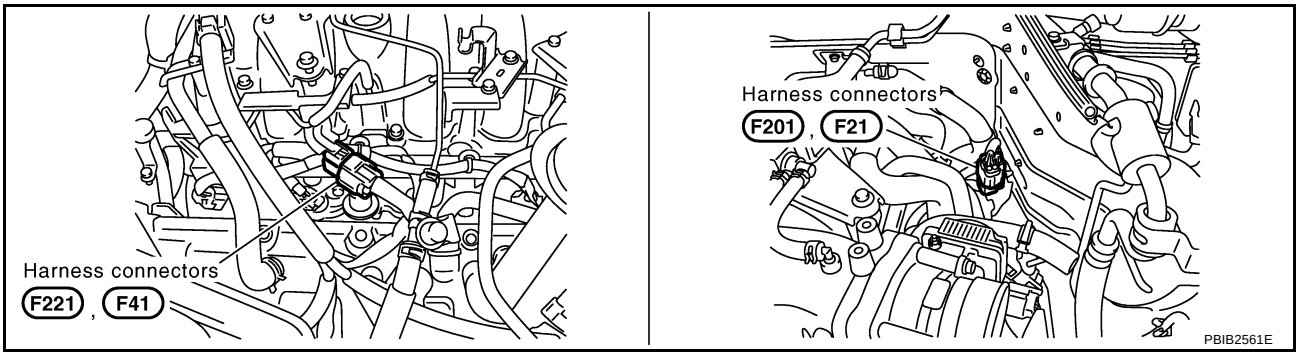

3. Turn ignition switch ON.
4. Check voltage between the following;
   harness connector F21 terminal 5 and ground,
   harness connector F41 terminal 5 and ground
   with CONSULT-II or tester.

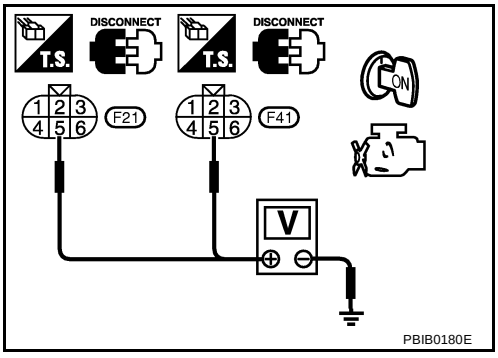

Voltage: Battery voltage

5. Turn ignition switch OFF.
6. Disconnect ECM harness connector.
7. Check harness continuity between the following terminals.

Cylinder	Harness connector terminal	ECM terminal
1	F21 terminal 3	23
3	F21 terminal 2	22
5	F21 terminal 1	21
7	F21 terminal 6	44
2	F41 terminal 3	42
4	F41 terminal 2	41
6	F41 terminal 1	40
8	F41 terminal 6	63

Continuity should exist.

8. Also check harness for short to ground and short to power.

OK or NG

OK >> GO TO 9.
NG >> Perform trouble diagnosis for INJECTOR CIRCUIT, refer to EC-1351 .

9. CHECK FUNCTION OF INJECTOR-II

Provide battery voltage between the following terminals, and then interrupt it. Listen to each injector operating sound.

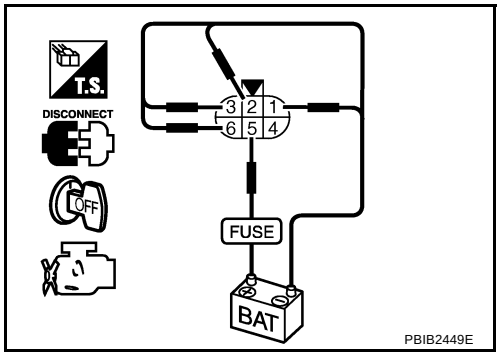

Cylinder	Harness connector	terminal	
		(+)	(–)
1	F201	5	3
3			2
5			1
7			6
2	F221	5	3
4			2
6			1
8			6

Operating sound should exist.

OK or NG

OK >> GO TO 10.
NG >> Perform trouble diagnosis for INJECTOR CIRCUIT, refer to EC-1351 .

10. CHECK INJECTOR

1. Turn ignition switch OFF.
2. Confirm that the engine is cooled down and there are no fire hazards near the vehicle.
3. Disconnect all injector harness connectors.
4. Remove injector gallery assembly. Refer to EM-192, "FUEL INJECTOR AND FUEL TUBE" .
   Keep fuel hose and all injectors connected to injector gallery.
5. For DTC P0171, reconnect injector harness connectors on bank 1.
   For DTC P0174, reconnect injector harness connectors on bank 2.
6. Disconnect all ignition coil harness connectors.
7. Prepare pans or saucers under each injector.
8. Crank engine for about 3 seconds.
   For DTC P0171, make sure that fuel sprays out from injectors on bank 1.
   For DTC P0174, make sure that fuel sprays out from injectors on bank 2.

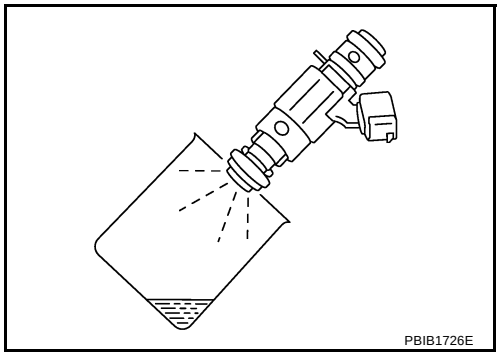

Fuel should be sprayed evenly for each injector.

OK or NG

OK >> GO TO 11.
NG >> Replace injectors from which fuel does not spray out. Always replace O-ring with new ones.

11. CHECK INTERMITTENT INCIDENT

Refer to EC-854, "TROUBLE DIAGNOSIS FOR INTERMITTENT INCIDENT" .

>> **INSPECTION END**

DTC P0172, P0175 FUEL INJECTION SYSTEM FUNCTION

PFP:16600

On Board Diagnosis Logic

ABS00E54

With the Air-Fuel Mixture Ratio Self-Learning Control, the actual mixture ratio can be brought closely to the theoretical mixture ratio based on the mixture ratio feedback signal from the heated oxygen sensors 1. The ECM calculates the necessary compensation to correct the offset between the actual and the theoretical ratios.
In case the amount of the compensation value is extremely large (The actual mixture ratio is too rich.), the ECM judges the condition as the fuel injection system malfunction and lights up the MIL (2 trip detection logic).

Sensor	Input Signal to ECM	ECM function	Actuator
Heated oxygen sensor 1	Density of oxygen in exhaust gas (Mixture ratio feedback signal)	Fuel injection control	Fuel injector

DTC No.	Trouble diagnosis name	DTC detecting condition	Possible cause
P0172 0172 (Bank 1)	Fuel injection system too rich	● Fuel injection system does not operate properly. ● The amount of mixture ratio compensation is too large. (The mixture ratio is too rich.)	● Heated oxygen sensor 1 ● Fuel injector ● Exhaust gas leaks ● Incorrect fuel pressure ● Mass air flow sensor
P0175 0175 (Bank 2)			

DTC Confirmation Procedure

ABS00E55

NOTE:
If DTC Confirmation Procedure has been previously conducted, always turn ignition switch OFF and wait at least 10 seconds before conducting the next test.

WITH CONSULT-II

1. Start engine and warm it up to normal operating temperature.
2. Turn ignition switch OFF and wait at least 10 seconds.
3. Turn ignition switch ON and select “SELF-LEARNING CONT” in “WORK SUPPORT” mode with CONSULT-II.
4. Clear the self-learning control coefficient by touching “CLEAR”.
5. Select “DATA MONITOR” mode with CONSULT-II.
6. Start engine again and let it idle for at least 10 minutes.
   The 1st trip DTC P0172, P0175 should be detected at this stage, if a malfunction exists. If so, go to EC-999, "Diagnostic Procedure" .

   NOTE:
   If 1st trip DTC is not detected during above procedure, performing the following procedure is advised.

a. Turn ignition switch OFF and wait at least 10 seconds.
b. Start engine and drive the vehicle under the similar conditions to (1st trip) Freeze Frame Data for a certain time. Refer to the table below.
   Hold the accelerator pedal as steady as possible.

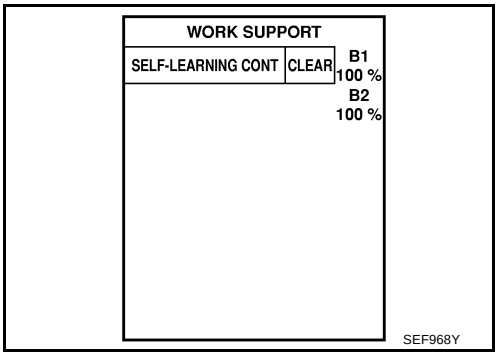

The similar conditions to (1st trip) Freeze Frame Data means the vehicle operation that the following conditions should be satisfied at the same time.

Engine speed	Engine speed in the freeze frame data ± 400 rpm
Vehicle speed	Vehicle speed in the freeze frame data ± 10 km/h (6 MPH)
Engine coolant temperature (T) condition	When the freeze frame data shows lower than 70 °C (158 °F), T should be lower than 70 °C (158 °F).
	When the freeze frame data shows higher than or equal to 70 °C (158 °F), T should be higher than or equal to 70 °C (158 °F).

7. If it is difficult to start engine at step 6, the fuel injection system has a malfunction, too.
8. Crank engine while depressing accelerator pedal.

If engine starts, go to EC-999, "Diagnostic Procedure" . If engine does not start, remove ignition plugs and check for fouling, etc.

WITH GST

1. Start engine and warm it up to normal operating temperature.
2. Turn ignition switch OFF and wait at least 10 seconds.
3. Disconnect mass air flow sensor harness connector. Then restart and run engine for at least 5 seconds at idle speed.
4. Stop engine and reconnect mass air flow sensor harness connector.
5. Select Service $03 with GST. Make sure DTC P0102 is detected.
6. Select Service $04 with GST and erase the DTC P0102.
7. Start engine again and let it idle for at least 10 minutes.
8. Select Service $07 with GST. The 1st trip DTC P0172 or P0175 should be detected at this stage, if a malfunction exists. If so, go to EC-999, "Diagnostic Procedure" .

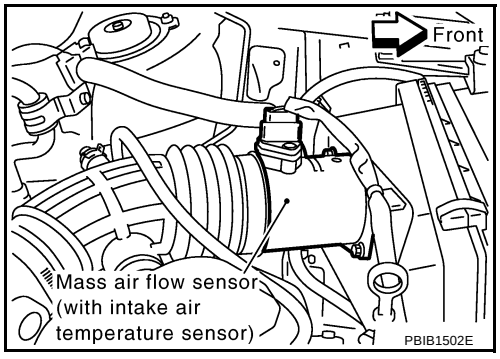

NOTE:
If 1st trip DTC is not detected during above procedure, performing the following procedure is advised.

a. Turn ignition switch OFF and wait at least 10 seconds.
b. Start engine and drive the vehicle under the similar conditions to (1st trip) Freeze Frame Data for a certain time. Refer to the table below.
Hold the accelerator pedal as steady as possible.

The similar conditions to (1st trip) Freeze Frame Data means the vehicle operation that the following conditions should be satisfied at the same time.

Engine speed	Engine speed in the freeze frame data ± 400 rpm
Vehicle speed	Vehicle speed in the freeze frame data ± 10 km/h (6 MPH)
Engine coolant temperature (T) condition	When the freeze frame data shows lower than 70 °C (158 °F), T should be lower than 70 °C (158 °F).
	When the freeze frame data shows higher than or equal to 70 °C (158 °F), T should be higher than or equal to 70 °C (158 °F).

9. If it is difficult to start engine at step 7, the fuel injection system has a malfunction.
10. Crank engine while depressing accelerator pedal.
If engine starts, go to EC-999, "Diagnostic Procedure" . If engine does not start, remove spark plugs and check for fouling, etc.

Wiring Diagram
BANK 1

ABS00E56

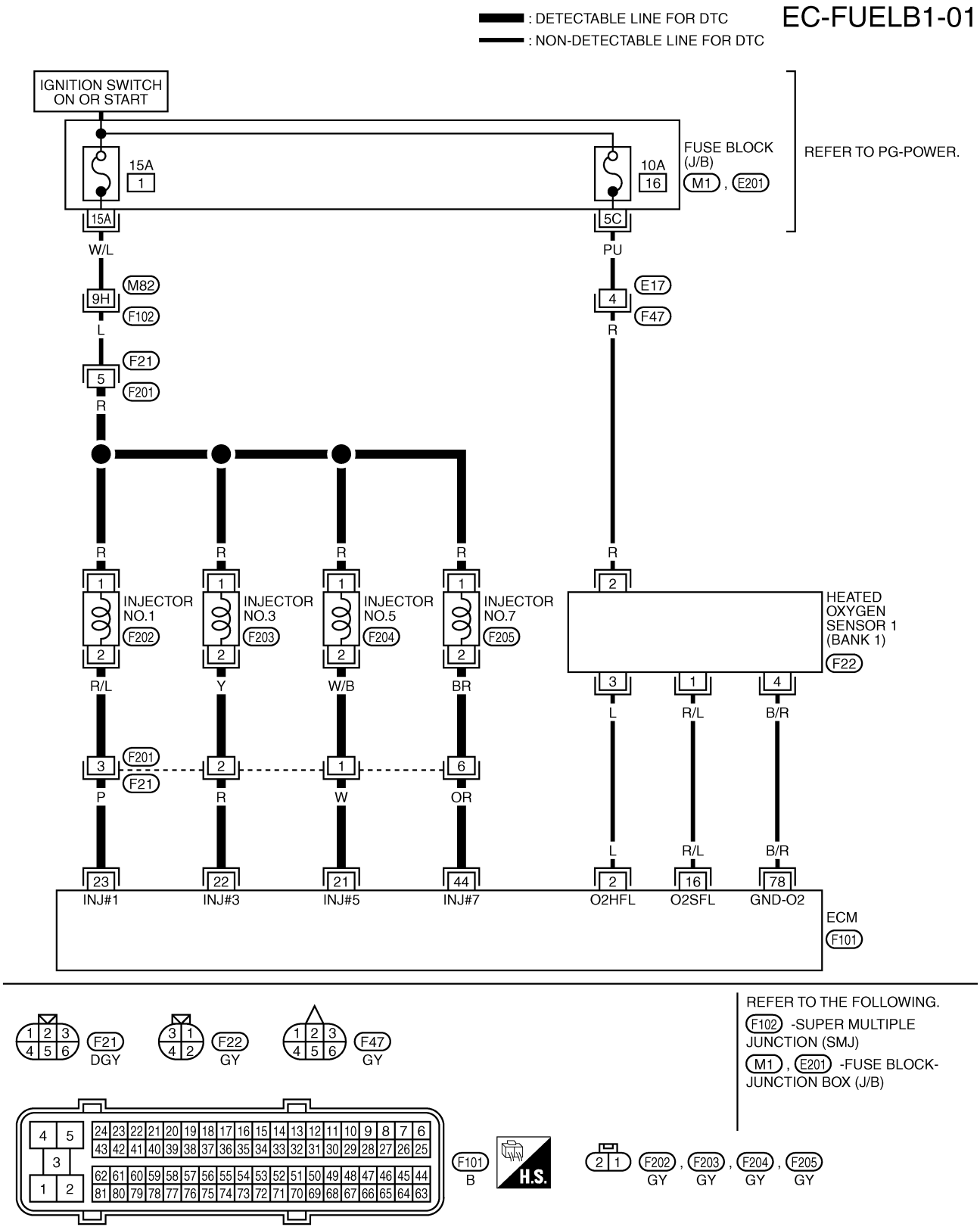

BANK 2

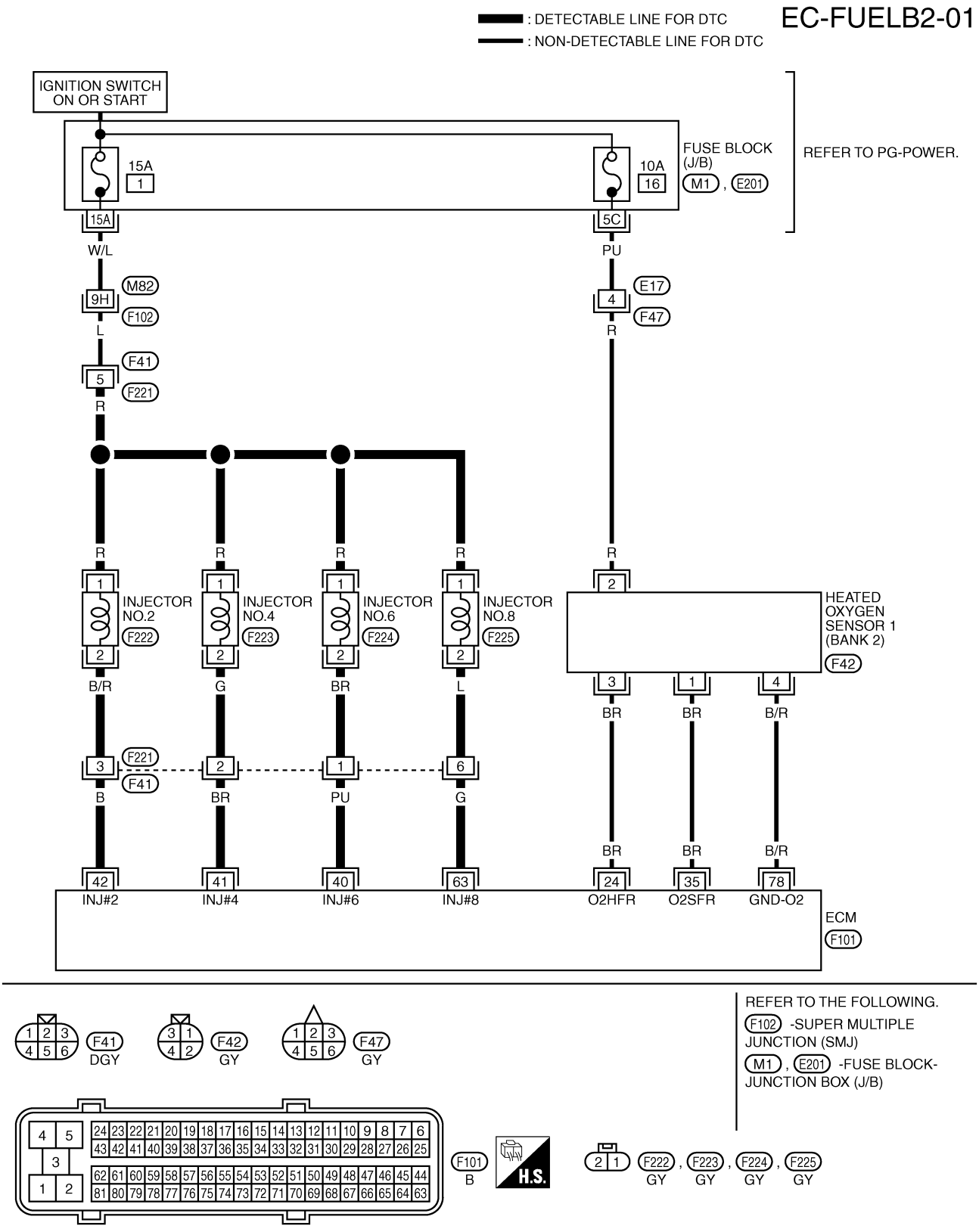
: DETECTABLE LINE FOR DTC
: NON-DETECTABLE LINE FOR DTC
EC-FUELB2-01
IGNITION SWITCH ON OR START
15A
1
10A
16
FUSE BLOCK (J/B)
M1 , E201
REFER TO PG-POWER.
15A
5C
W/L
PU
M82
9H
F102
L
E17
4
F47
R
F41
5
F221
R
R
R
R
R
R
INJECTOR NO.2
F222
INJECTOR NO.4
F223
INJECTOR NO.6
F224
INJECTOR NO.8
F225
HEATED OXYGEN SENSOR 1 (BANK 2)
F42
B/R
G
BR
L
BR
BR
B/R
F221
F41
B
BR
PU
G
BR
BR
B/R
42
41
40
63
24
35
78
INJ#2
INJ#4
INJ#6
INJ#8
O2HFR
O2SFR
GND-O2
ECM
F101
F41
DGY
F42
GY
F47
GY
REFER TO THE FOLLOWING.
F102 -SUPER MULTIPLE JUNCTION (SMJ)
M1 , E201 -FUSE BLOCK-JUNCTION BOX (J/B)
F101
B
H.S.
F222 , F223 , F224 , F225
GY GY GY GY
TBWM0233E

Diagnostic Procedure

ABS00E57

1. CHECK EXHAUST GAS LEAK

1. Start engine and run it at idle.
2. Listen for an exhaust gas leak before three way catalyst (manifold).

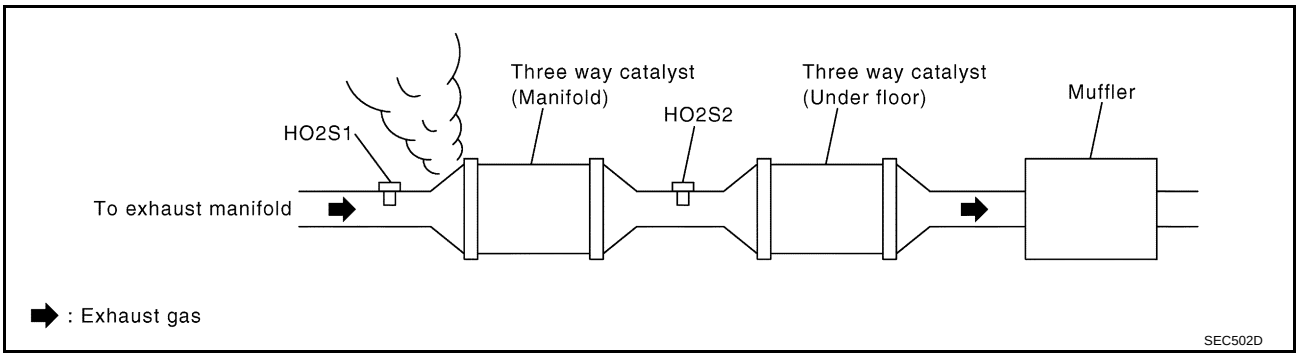

OK or NG

OK >> GO TO 2.
NG >> Repair or replace.

2. CHECK FOR INTAKE AIR LEAK

Listen for an intake air leak after the mass air flow sensor.

OK or NG

OK >> GO TO 3.
NG >> Repair or replace.

3. CHECK HEATED OXYGEN SENSOR 1 CIRCUIT FOR OPEN AND SHORT

1. Turn ignition switch OFF.
2. Disconnect corresponding heated oxygen sensor 1 (HO2S1) harness connector.

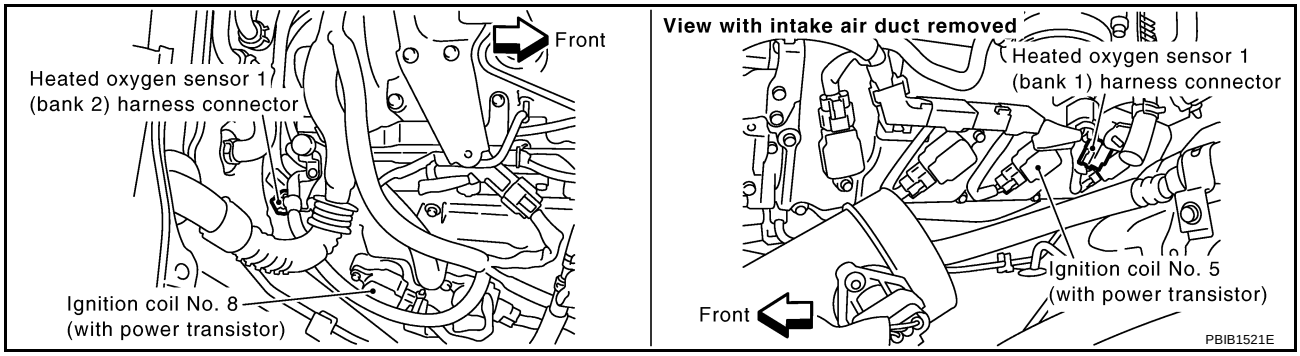

3. Disconnect ECM harness connector.
4. Check harness continuity between ECM terminal and HO2S1 terminal as follows.
   Refer to Wiring Diagram.

DTC	Terminals		Bank
	ECM	Sensor	
P0172	16	1	1
P0175	35	1	2

Continuity should exist.

5. Check harness continuity between the following terminals and ground.
   Refer to Wiring Diagram.

DTC	Terminals		Bank
	ECM	Sensor	
P0172	16	1	1
P0175	35	1	2

Continuity should not exist.

6. Check harness continuity between HO2S1 terminal 4 and ECM terminal 78.

Continuity should exist.

7. Also check harness for short to ground and short to power.

OK or NG

OK >> GO TO 4.
NG >> Repair open circuit or short to ground or short to power in harness or connectors.

4. CHECK FUEL PRESSURE

1. Release fuel pressure to zero. Refer to EC-789, "FUEL PRESSURE RELEASE" .
2. Install fuel pressure gauge and check fuel pressure. Refer to EC-789, "FUEL PRESSURE CHECK" .

At idling: 350 kPa (3.57 kg/cm^2 , 51 psi)

OK or NG

OK >> GO TO 6.
NG >> GO TO 5.

5. DETECT MALFUNCTIONING PART

Check the following.

- Fuel pump and circuit (Refer to EC-1358, "FUEL PUMP CIRCUIT" .)
- Fuel pressure regulator (Refer to EC-789, "FUEL PRESSURE CHECK" .)

>> Repair or replace.

6. CHECK MASS AIR FLOW SENSOR

With CONSULT-II

1. Install all removed parts.
2. Check “MASS AIR FLOW” in “DATA MONITOR” mode with CONSULT-II.

2.0 - 6.0 g·m/sec: at idling
7.0 - 20.0 g·m/sec: at 2,500 rpm

With GST

1. Install all removed parts.
2. Check mass air flow sensor signal in “Service $01” with GST.

2.0 - 6.0 g·m/sec: at idling
7.0 - 20.0 g·m/sec: at 2,500 rpm

OK or NG

OK (With CONSULT-II)>>GO TO 7.
OK (Without CONSULT-II)>>GO TO 8.
NG >> Check connectors for rusted terminals or loose connections in the mass air flow sensor circuit or grounds. Refer to EC-902, "DTC P0102, P0103 MAF SENSOR" .

7. CHECK FUNCTION OF INJECTORS

With CONSULT-II

1. Start engine.
2. Perform “POWER BALANCE” in “ACTIVE TEST” mode with CONSULT-II.
3. Make sure that each circuit produces a momentary engine speed drop.

ACTIVE TEST	
POWER BALANCE	
MONITOR	
ENG SPEED	XXX rpm
MAS A/F SE-B1	XXX V

PBIB0133E

OK or NG

OK >> GO TO 10.
NG >> Perform trouble diagnosis for EC-1351, "INJECTOR CIRCUIT" .

8. CHECK FUNCTION OF INJECTOR-I

Without CONSULT-II

1. Turn ignition switch OFF.
2. Disconnect harness connectors F21, F201 (bank 1) and F41, F221 (bank 2).

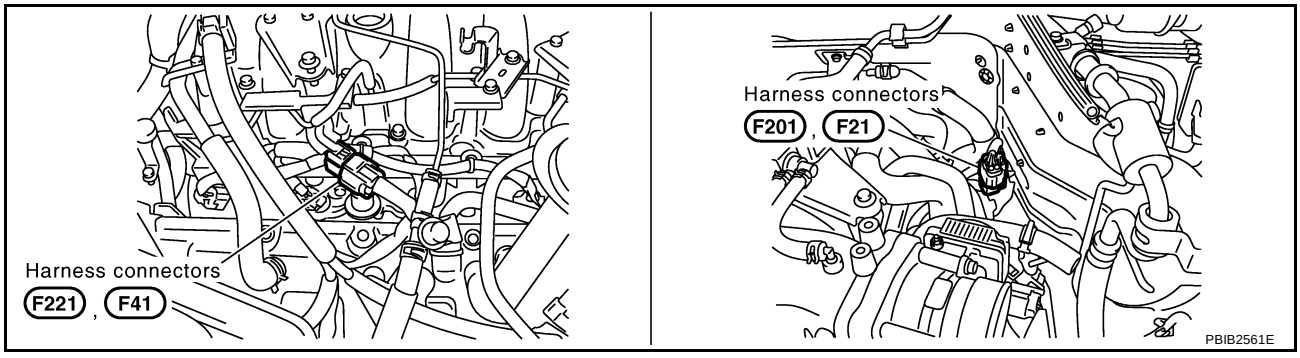

3. Turn ignition switch ON.
4. Check voltage between the following;
   harness connector F21 terminal 5 and ground,
   harness connector F41 terminal 5 and ground
   with CONSULT-II or tester.

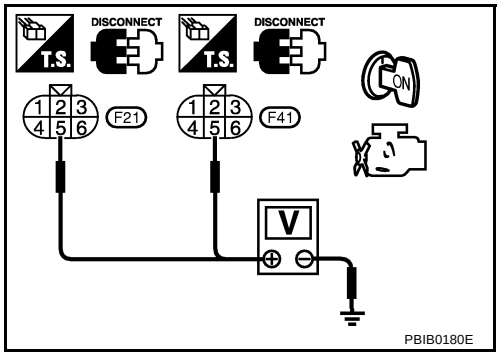

Voltage: Battery voltage

5. Turn ignition switch OFF.
6. Disconnect ECM harness connector.
7. Check harness continuity between the following terminals.

Cylinder	Harness connector terminal	ECM terminal
1	F21 terminal 3	23
3	F21 terminal 2	22
5	F21 terminal 1	21
7	F21 terminal 6	44
2	F41 terminal 3	42
4	F41 terminal 2	41
6	F41 terminal 1	40
8	F41 terminal 6	63

Continuity should exist.

8. Also check harness for short to ground and short to power.

OK or NG

OK >> GO TO 9.
NG >> Perform trouble diagnosis for INJECTOR CIRCUIT, refer to EC-1351 .

9. CHECK FUNCTION OF INJECTOR-II

Provide battery voltage between the following terminals, and then interrupt it. Listen to each injector operating sound.

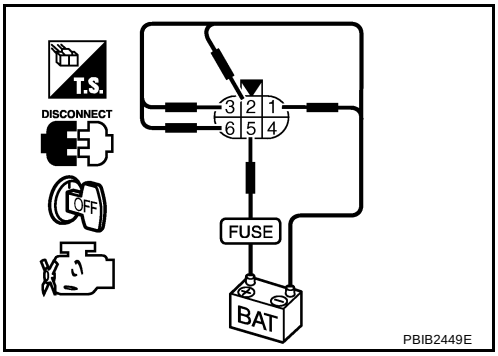

Cylinder	Harness connector	terminal	
		(+)	(–)
1	F201	5	3
3			2
5			1
7			6
2	F221	5	3
4			2
6			1
8			6

Operating sound should exist.

OK or NG

OK >> GO TO 10.
NG >> Perform trouble diagnosis for INJECTOR CIRCUIT, refer to EC-1351 .

10. CHECK INJECTOR

1. Turn ignition switch OFF.
2. Confirm that the engine is cooled down and there are no fire hazards near the vehicle.
3. Remove injector gallery assembly. Refer to EM-192, "FUEL INJECTOR AND FUEL TUBE" .
   Keep fuel hose and all injectors connected to injector gallery.
4. Disconnect all injector harness connectors.
5. Disconnect all ignition coil harness connectors.
6. Prepare pans or saucers under each injectors.
7. Crank engine for about 3 seconds.
   Make sure fuel does not drip from injector.

OK or NG

OK (Does not drip.)>>GO TO 11.
NG (Drips.)>>Replace the injectors from which fuel is dripping. Always replace O-ring with new one.

11. CHECK INTERMITTENT INCIDENT

Refer to EC-854, "TROUBLE DIAGNOSIS FOR INTERMITTENT INCIDENT" .

>> **INSPECTION END**

DTC P0181 FTT SENSOR

PFP:22630

Component Description

ABS007MB

The fuel tank temperature sensor is used to detect the fuel temperature inside the fuel tank. The sensor modifies a voltage signal from the ECM. The modified signal returns to the ECM as the fuel temperature input. The sensor uses a thermistor which is sensitive to the change in temperature. The electrical resistance of the thermistor decreases as temperature increases.

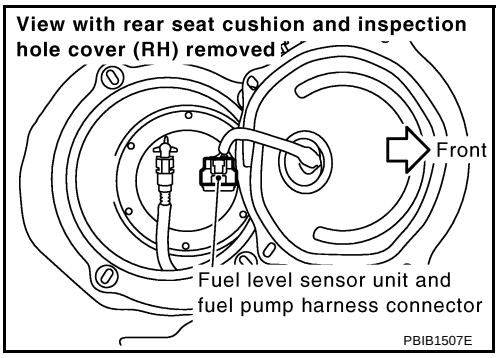

<Reference data>

Fluid temperature °C (°F)	Voltage* V	Resistance kΩ
20 (68)	3.5	2.3 - 2.7
50 (122)	2.2	0.79 - 0.90

*: These data are reference values and are measured between ECM terminal 107 (Fuel tank temperature sensor) and ground.

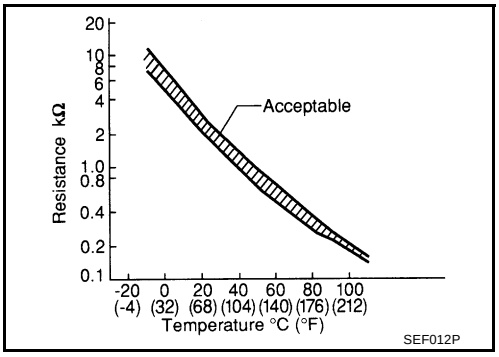

CAUTION:
Do not use ECM ground terminals when measuring input/output voltage. Doing so may result in damage to the ECM's transistor. Use a ground other than ECM terminals, such as the ground.

On Board Diagnosis Logic

ABS007MC

DTC No.	Trouble diagnosis name	DTC detecting condition	Possible cause
P0181 0181	Fuel tank temperature sensor circuit range/ performance	Rationally incorrect voltage from the sensor is sent to ECM, compared with the voltage signals from engine coolant temperature sensor and intake air temperature sensor.	● Harness or connectors (The sensor circuit is open or shorted) ● Fuel tank temperature sensor

DTC Confirmation Procedure

ABS007MD

NOTE:
If DTC Confirmation Procedure has been previously conducted, always turn ignition switch OFF and wait at least 10 seconds before conducting the next test.

WITH CONSULT-II

1. Turn ignition switch ON.
2. Select “DATA MONITOR” mode with CONSULT-II.
3. Wait at least 10 seconds.
   If the result is NG, go to EC-1007, "Diagnostic Procedure" .
   If the result is OK, go to following step.
4. Check “COOLAN TEMP/S” value.
   If “COOLAN TEMP/S” is less than 60°C (140°F), the result will be OK.
   If “COOLAN TEMP/S” is above 60°C (140°F), go to the following step.
5. Cool engine down until “COOLAN TEMP/S” is less than 60°C (140°F).
6. Wait at least 10 seconds.
7. If 1st trip DTC is detected, go to EC-1007, "Diagnostic Procedure" .

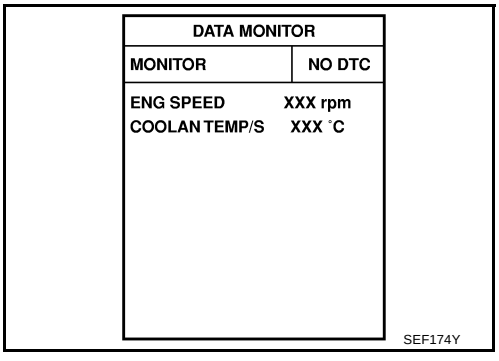

WITH GST

Follow the procedure “WITH CONSULT-II” above.

Wiring Diagram

ABS007ME

EC-FTTS-01

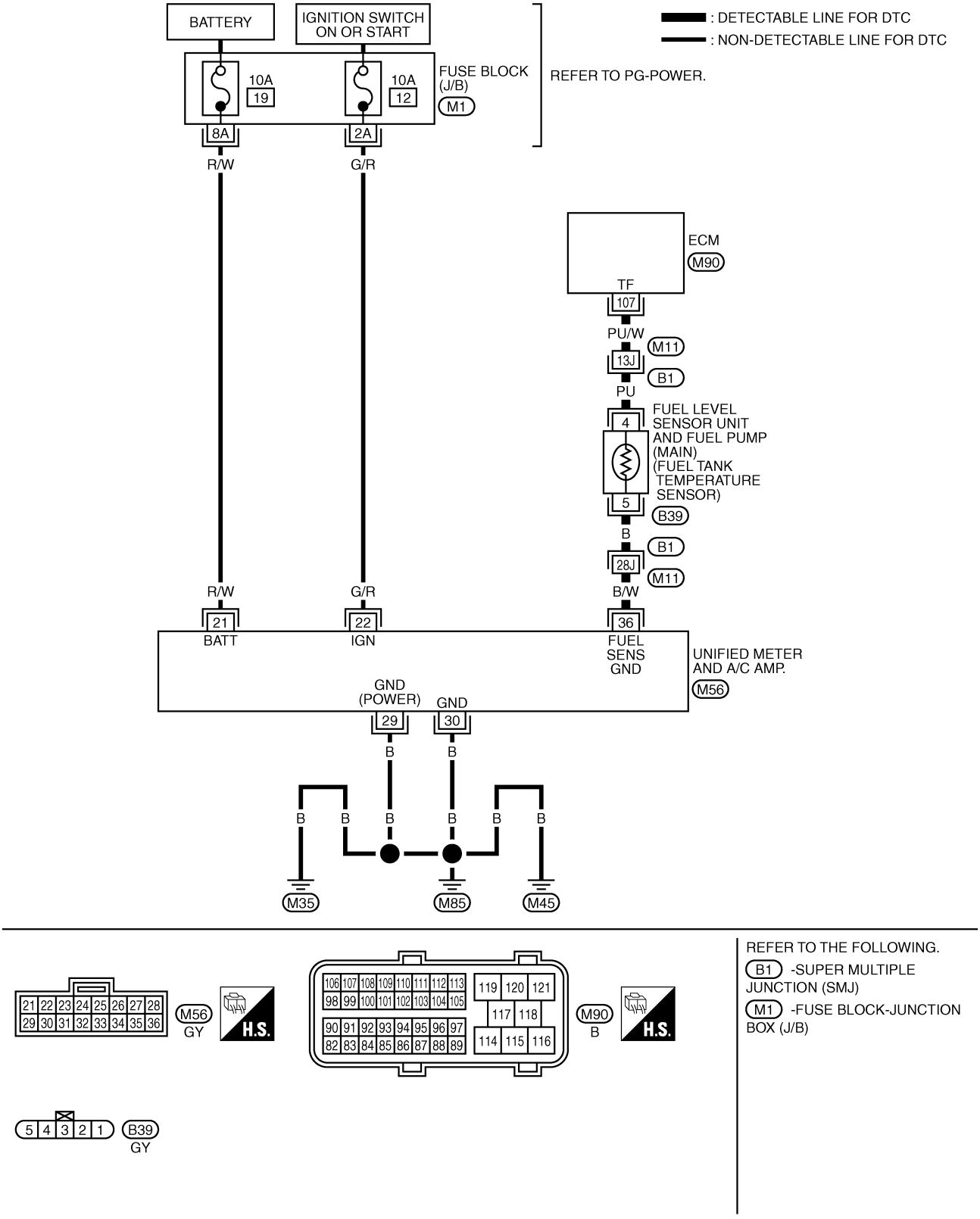

TBWM0861E

Diagnostic Procedure

ABS007MF

1. CHECK GROUND CONNECTIONS

1. Turn ignition switch OFF.
2. Loosen and retighten three ground screws on the body.
   Refer to EC-861, "Ground Inspection" .

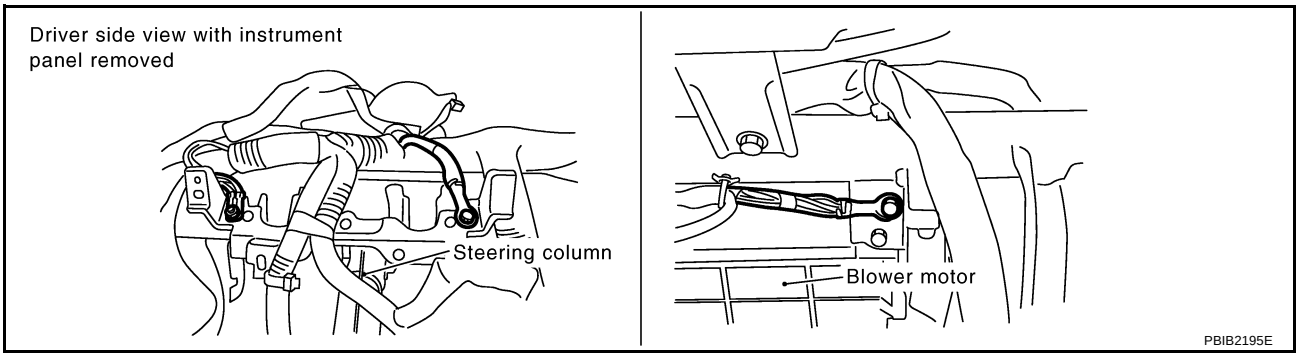

OK or NG

OK >> GO TO 2.
NG >> Repair or replace ground connections.

2. CHECK DTC WITH "UNIFIED METER AND A/C AMP."

Refer to DI-32, "SELF-DIAGNOSTIC RESULTS" .

OK or NG

OK >> GO TO 3.
NG >> Go to DI-22, "Fuel Level Sensor Signal Inspection" .

3. CHECK FUEL TANK TEMPERATURE SENSOR POWER SUPPLY CIRCUIT

1. Turn ignition switch OFF.
2. Disconnect "fuel level sensor unit and fuel pump" harness connector.
3. Turn ignition switch ON.

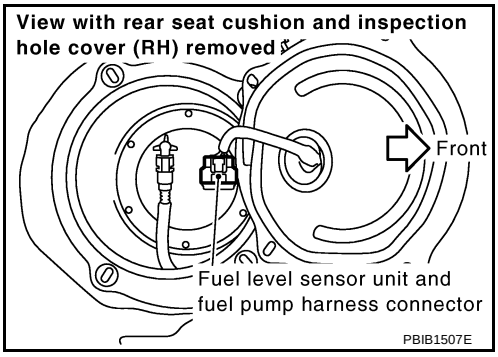

4. Check voltage between "fuel level sensor unit and fuel pump" terminal 4 and ground with CONSULT-II or tester.

   Voltage: Approximately 5V

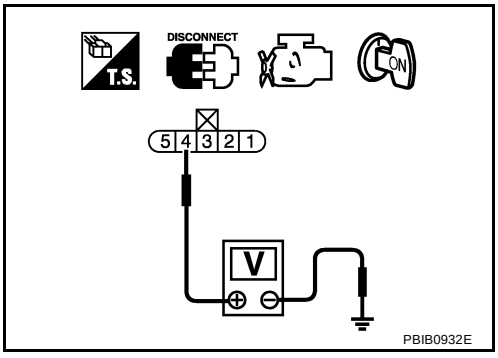

OK or NG

OK >> GO TO 5.
NG >> GO TO 4.

4. DETECT MALFUNCTIONING PART

Check the following.

- Harness connectors B1, M11
- Harness for open or short between ECM and “fuel level sensor unit and fuel pump”

>> Repair open circuit or short to ground or short to power in harness or connector.

5. CHECK FUEL TANK TEMPERATURE SENSOR GROUND CIRCUIT FOR OPEN AND SHORT

1. Turn ignition switch OFF.
2. Disconnect “unified meter and A/C amp.” harness connector.
3. Check harness continuity between “fuel level sensor unit and fuel pump” terminal 5 and “unified meter and A/C amp.” terminal 36. Refer to Wiring Diagram.

Continuity should exist.

4. Also check harness for short to ground and short to power.

OK or NG

OK >> GO TO 7.
NG >> GO TO 6.

6. DETECT MALFUNCTIONING PART

Check the following.

- Harness connectors B1, M11
- Harness for open or short between “fuel level sensor unit and fuel pump” and “unified meter and A/C amp.”

>> Repair open circuit or short to ground or short to power in harness or connector.

7. CHECK FUEL TANK TEMPERATURE SENSOR

Refer to EC-1009, "Component Inspection" .

OK or NG

OK >> GO TO 8.
NG >> Replace “fuel level sensor unit and fuel pump”.

8. CHECK INTERMITTENT INCIDENT

Refer to EC-854, "TROUBLE DIAGNOSIS FOR INTERMITTENT INCIDENT" .

>> **INSPECTION END**

Component Inspection

ABS007MG

FUEL TANK TEMPERATURE SENSOR

1. Remove fuel level sensor unit.
2. Check resistance between “fuel level sensor unit and fuel pump” terminals 4 and 5 by heating with hot water or heat gun as shown in the figure.

Temperature °C (°F)	Resistance kΩ
20 (68)	2.3 - 2.7
50 (122)	0.79 - 0.90

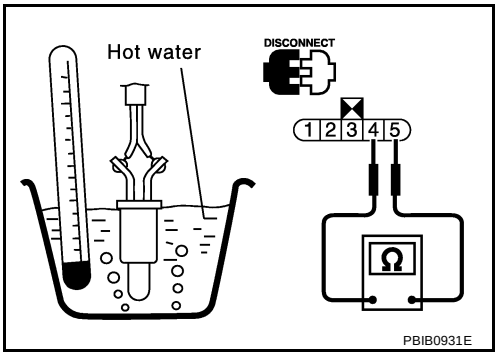

Removal and Installation

ABS007MH

FUEL TANK TEMPERATURE SENSOR

Refer to FL-4, "FUEL LEVEL SENSOR UNIT, FUEL FILTER AND FUEL PUMP ASSEMBLY" .

DTC P0182, P0183 FTT SENSOR

PFP:22630

Component Description

ABS007MI

The fuel tank temperature sensor is used to detect the fuel temperature inside the fuel tank. The sensor modifies a voltage signal from the ECM. The modified signal returns to the ECM as the fuel temperature input. The sensor uses a thermistor which is sensitive to the change in temperature. The electrical resistance of the thermistor decreases as temperature increases.

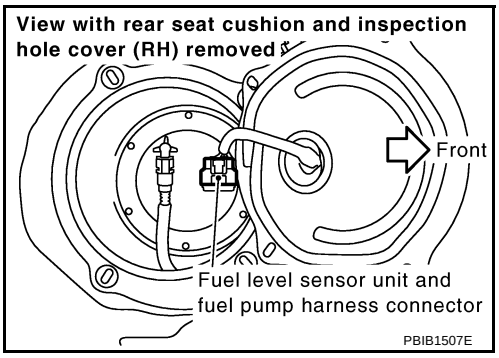

<Reference data>

Fluid temperature °C (°F)	Voltage* V	Resistance kΩ
20 (68)	3.5	2.3 - 2.7
50 (122)	2.2	0.79 - 0.90

*: These data are reference values and are measured between ECM terminal 107 (Fuel tank temperature sensor) and ground.

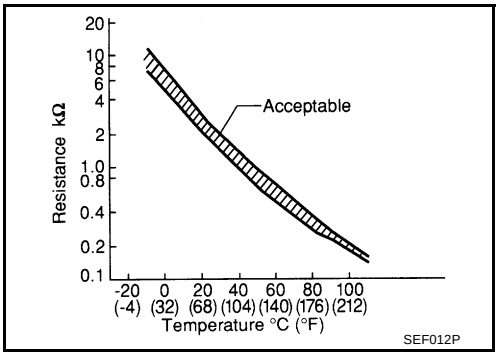

CAUTION:
Do not use ECM ground terminals when measuring input/output voltage. Doing so may result in damage to the ECM's transistor. Use a ground other than ECM terminals, such as the ground.

On Board Diagnosis Logic

ABS007MJ

DTC No.	Trouble diagnosis name	DTC detecting condition	Possible cause
P0182 0182	Fuel tank temperature sensor circuit low input	An excessively low voltage from the sensor is sent to ECM.	● Harness or connectors (The sensor circuit is open or shorted.) ● Fuel tank temperature sensor
P0183 0183	Fuel tank temperature sensor circuit high input	An excessively high voltage from the sensor is sent to ECM.	

DTC Confirmation Procedure

ABS007MK

NOTE:
If DTC Confirmation Procedure has been previously conducted, always turn ignition switch OFF and wait at least 10 seconds before conducting the next test.

WITH CONSULT-II

1. Turn ignition switch ON.
2. Select “DATA MONITOR” mode with CONSULT-II.
3. Wait at least 5 seconds.
4. If 1st trip DTC is detected, go to EC-1012, "Diagnostic Procedure" .

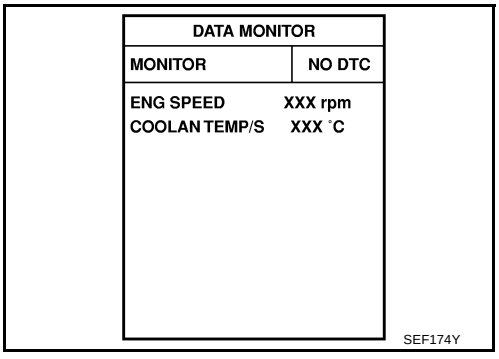

WITH GST

Follow the procedure “WITH CONSULT-II” above.

Wiring Diagram

ABS007ML

EC-FTTS-01

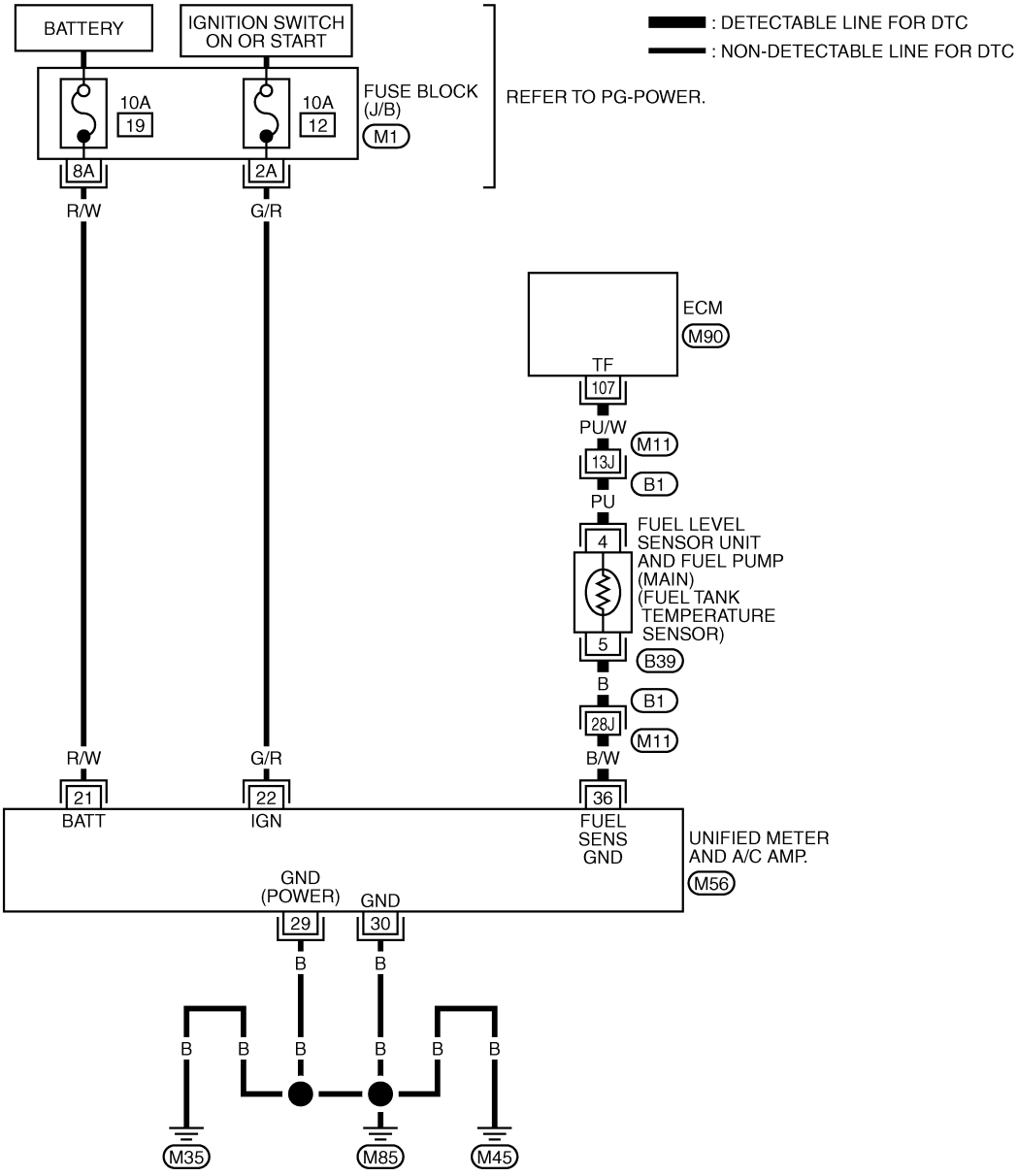

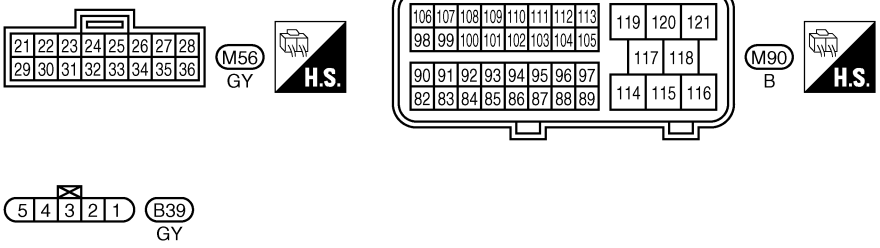

REFER TO THE FOLLOWING.

B1 -SUPER MULTIPLE JUNCTION (SMJ)

M1 -FUSE BLOCK-JUNCTION BOX (J/B)

TBWM0861E

Diagnostic Procedure

ABS007MM

1. CHECK GROUND CONNECTIONS

1. Turn ignition switch OFF.
2. Loosen and retighten three ground screws on the body.
   Refer to EC-861, "Ground Inspection" .

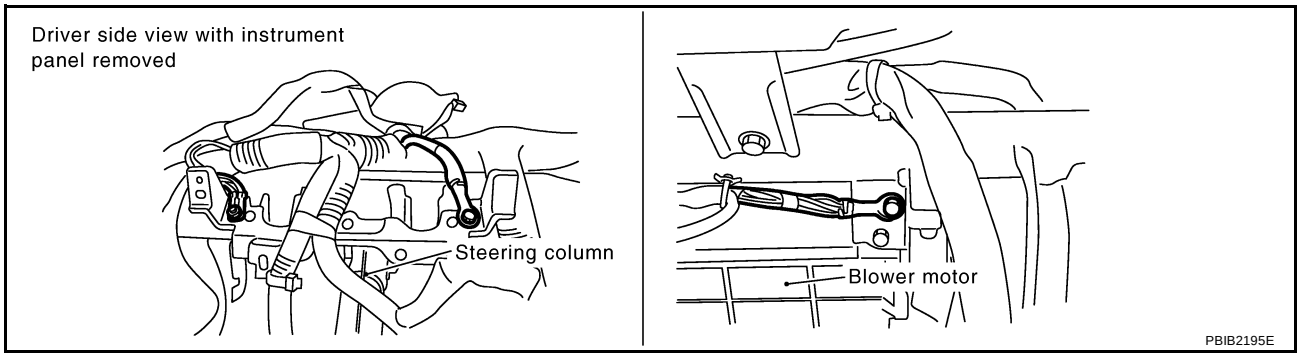

OK or NG

OK >> GO TO 2.
NG >> Repair or replace ground connections.

2. CHECK DTC WITH “UNIFIED METER AND A/C AMP.”

Refer to DI-32, "SELF-DIAGNOSTIC RESULTS" .

OK or NG

OK >> GO TO 3.
NG >> Go to DI-22, "Fuel Level Sensor Signal Inspection" .

3. CHECK FUEL TANK TEMPERATURE SENSOR POWER SUPPLY CIRCUIT

1. Turn ignition switch OFF.
2. Disconnect “fuel level sensor unit and fuel pump” harness connector.
3. Turn ignition switch ON.

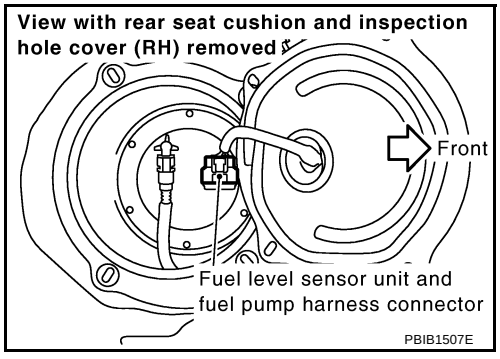

4. Check voltage between “fuel level sensor unit and fuel pump” terminal 4 and ground with CONSULT-II or tester.

   Voltage: Approximately 5V

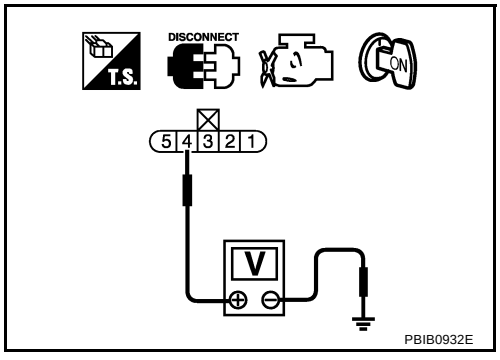

OK or NG

OK >> GO TO 5.
NG >> GO TO 4.

4. DETECT MALFUNCTIONING PART

Check the following.

- Harness connectors B1, M11
- Harness for open or short between ECM and “fuel level sensor unit and fuel pump”

>> Repair open circuit or short to ground or short to power in harness or connector.

5. CHECK FUEL TANK TEMPERATURE SENSOR GROUND CIRCUIT FOR OPEN AND SHORT

1. Turn ignition switch OFF.
2. Disconnect “unified meter and A/C amp.” harness connector.
3. Check harness continuity between “fuel level sensor unit and fuel pump” terminal 5 and “unified meter and A/C amp.” terminal 36. Refer to Wiring Diagram.

Continuity should exist.

4. Also check harness for short to ground and short to power.

OK or NG

OK >> GO TO 7.
NG >> GO TO 6.

6. DETECT MALFUNCTIONING PART

Check the following.

- Harness connectors B1, M11
- Harness for open or short between “fuel level sensor unit and fuel pump” and “unified meter and A/C amp.”

>> Repair open circuit or short to ground or short to power in harness or connector.

7. CHECK FUEL TANK TEMPERATURE SENSOR

Refer to EC-1009, "Component Inspection" .

OK or NG

OK >> GO TO 8.
NG >> Replace “fuel level sensor unit and fuel pump”.

8. CHECK INTERMITTENT INCIDENT

Refer to EC-854, "TROUBLE DIAGNOSIS FOR INTERMITTENT INCIDENT" .

>> **INSPECTION END**

Component Inspection

ABS007MN

FUEL TANK TEMPERATURE SENSOR

1. Remove fuel level sensor unit.
2. Check resistance between “fuel level sensor unit and fuel pump” terminals 4 and 5 by heating with hot water or heat gun as shown in the figure.

Temperature °C (°F)	Resistance kΩ
20 (68)	2.3 - 2.7
50 (122)	0.79 - 0.90

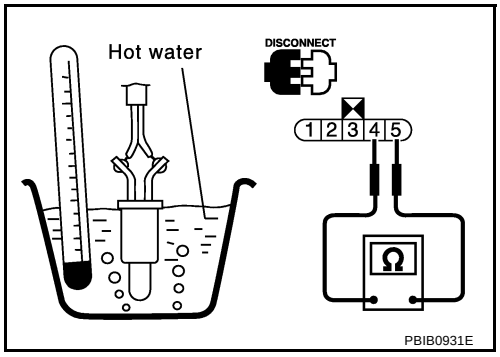

Removal and Installation

ABS007MO

FUEL TANK TEMPERATURE SENSOR

Refer to FL-4, "FUEL LEVEL SENSOR UNIT, FUEL FILTER AND FUEL PUMP ASSEMBLY" .

DTC P0222, P0223 TP SENSOR

PFP:16119

Component Description

ABS007MP

Electric throttle control actuator consists of throttle control motor, throttle position sensor, etc. The throttle position sensor responds to the throttle valve movement.
The throttle position sensor has the two sensors. These sensors are a kind of potentiometers which transform the throttle valve position into output voltage, and emit the voltage signal to the ECM. In addition, these sensors detect the opening and closing speed of the throttle valve and feed the voltage signals to the ECM. The ECM judges the current opening angle of the throttle valve from these signals and the ECM controls the throttle control motor to make the throttle valve opening angle properly in response to driving condition.

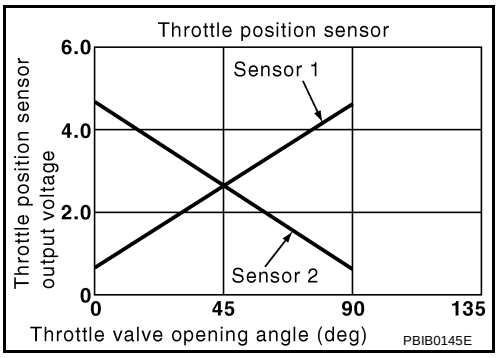

CONSULT-II Reference Value in Data Monitor Mode

ABS007MQ

Specification data are reference values.

MONITOR ITEM	CONDITION		SPECIFICATION
THRTL SEN 1 THRTL SEN 2*	● Ignition switch: ON (Engine stopped) ● Selector lever: D	Accelerator pedal: Fully released	More than 0.36V
		Accelerator pedal: Fully depressed	Less than 4.75V

*: Throttle position sensor 2 signal is converted by ECM internally. Thus, it differs from ECM terminal voltage signal.

On Board Diagnosis Logic

ABS007MR

These self-diagnoses have the one trip detection logic.

DTC No.	Trouble diagnosis name	DTC detecting condition	Possible cause
P0222 0222	Throttle position sensor 1 circuit low input	An excessively low voltage from the TP sensor 1 is sent to ECM.	● Harness or connectors (TP sensor 1 circuit is open or shorted.) (APP sensor 2 circuit is shorted.) ● Electric throttle control actuator (TP sensor 1) ● Accelerator pedal position sensor (APP sensor 2)
P0223 0223	Throttle position sensor 1 circuit high input	An excessively high voltage from the TP sensor 1 is sent to ECM.	

FAIL-SAFE MODE

When the malfunction is detected, ECM enters fail-safe mode and the MIL lights up.

Engine operation condition in fail-safe mode
The ECM controls the electric throttle control actuator in regulating the throttle opening in order for the idle position to be within +10 degrees. The ECM regulates the opening speed of the throttle valve to be slower than the normal condition. So, the acceleration will be poor.

DTC Confirmation Procedure

ABS007MS

NOTE:
If DTC Confirmation Procedure has been previously conducted, always turn ignition switch OFF and wait at least 10 seconds before conducting the next test.
TESTING CONDITION:
Before performing the following procedure, confirm that battery voltage is more than 10V at idle.

WITH CONSULT-II

1. Turn ignition switch ON.
2. Select “DATA MONITOR” mode with CONSULT-II.
3. Start engine and let it idle for 1 second.
4. If DTC is detected, go to EC-1018, "Diagnostic Procedure" .

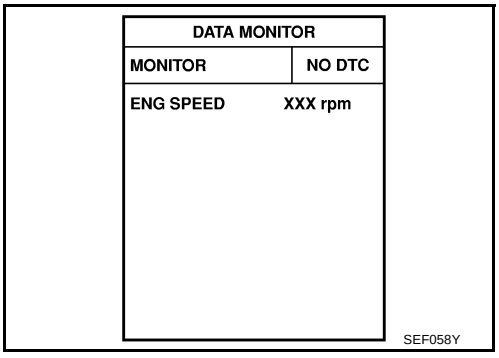

WITH GST

Follow the procedure “WITH CONSULT-II” above.

Wiring Diagram

ABS007MT

EC-TPS1-01

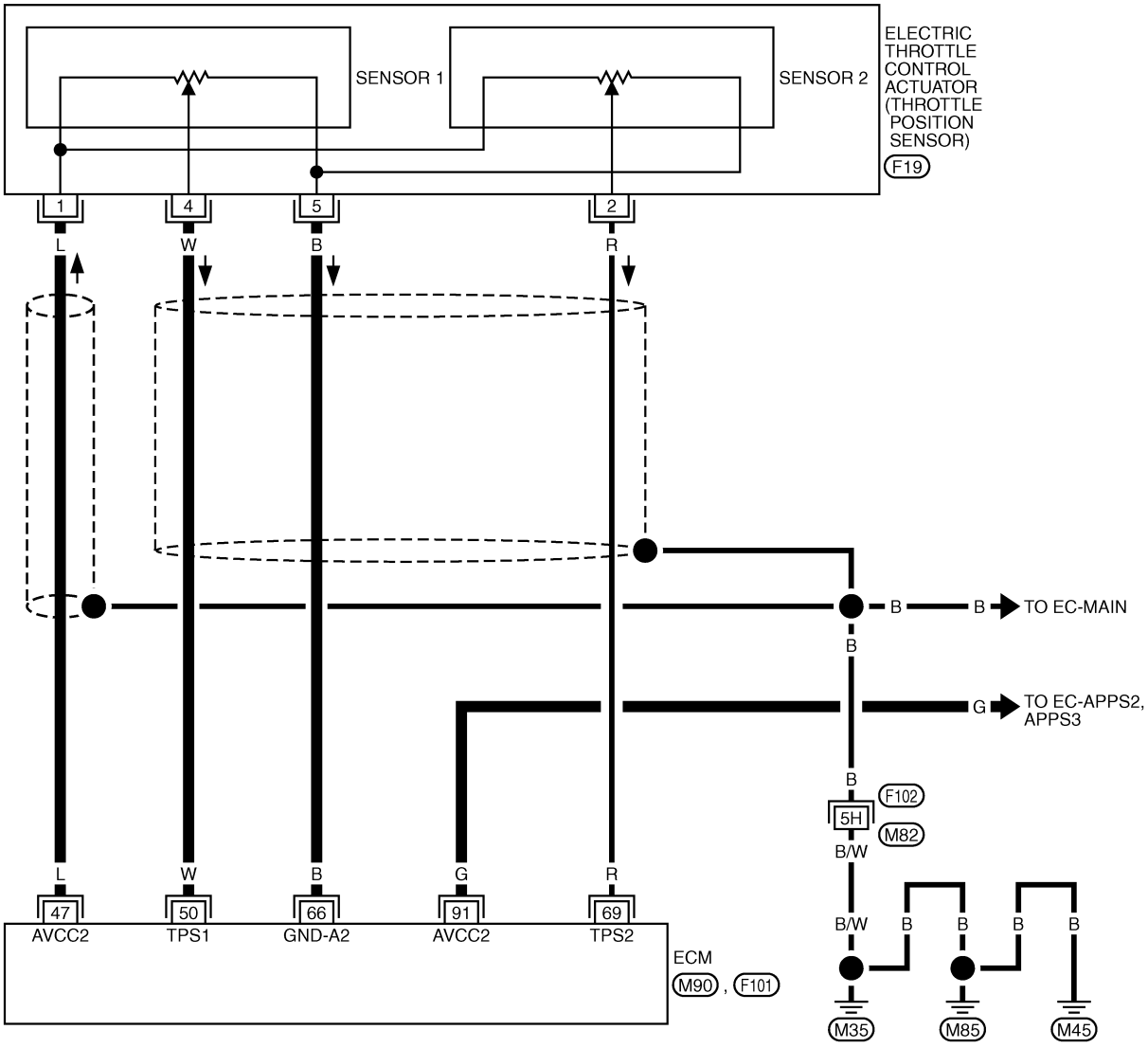

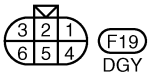

REFER TO THE FOLLOWING.
F102 -SUPER MULTIPLE JUNCTION (SMJ)

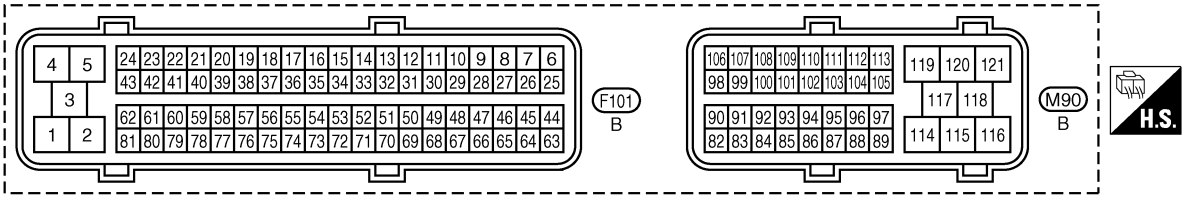

TBWM0411E

Specification data are reference values and are measured between each terminal and ground.

CAUTION:

Do not use ECM ground terminals when measuring input/output voltage. Doing so may result in damage to the ECM's transistor. Use a ground other than ECM terminals, such as the ground.

TERMINAL NO.	WIRE COLOR	ITEM	CONDITION	DATA (DC Voltage)
47	L	Sensor power supply (Throttle position sensor)	**[Ignition switch: ON]**	Approximately 5V
50	W	Throttle position sensor 1	**[Ignition switch: ON]** ● Engine stopped ● Selector lever: D ● Accelerator pedal: Fully released	More than 0.36V
			[Ignition switch: ON] ● Engine stopped ● Selector lever: D ● Accelerator pedal: Fully depressed	Less than 4.75V
66	B	Sensor ground (Throttle position sensor)	**[Engine is running]** ● **Warm-up condition** ● Idle speed	Approximately 0V
69	R	Throttle position sensor 2	**[Ignition switch: ON]** ● Engine stopped ● Selector lever: D ● Accelerator pedal: Fully released	Less than 4.75V
			[Ignition switch: ON] ● Engine stopped ● Selector lever: D ● Accelerator pedal: Fully depressed	More than 0.36V
91	G	Sensor power supply (APP sensor 2)	**[Ignition switch: ON]**	Approximately 5V

Diagnostic Procedure

ABS007MU

1. CHECK GROUND CONNECTIONS

1. Turn ignition switch OFF.
2. Loosen and retighten three ground screws on the body.
   Refer to EC-861, "Ground Inspection" .

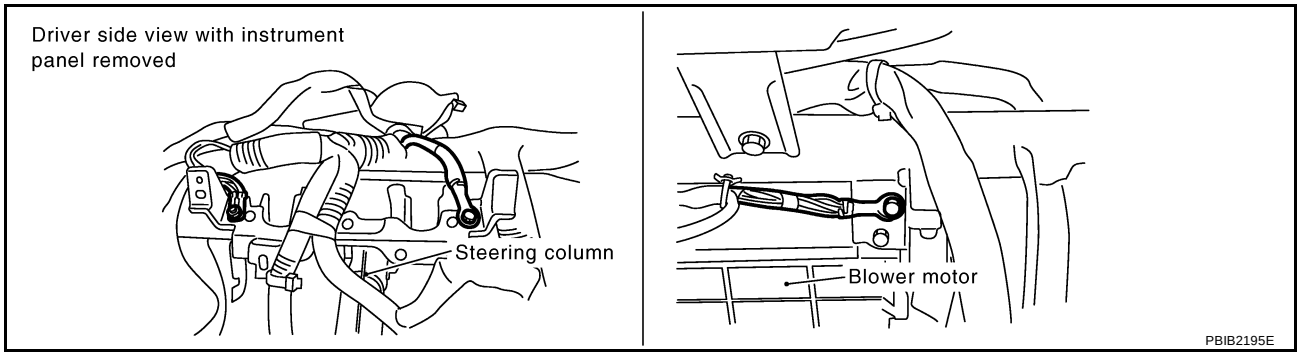

OK or NG

OK >> GO TO 2.
NG >> Repair or replace ground connections.

2. CHECK THROTTLE POSITION SENSOR 1 POWER SUPPLY CIRCUIT-I

1. Disconnect electric throttle control actuator harness connector.
2. Turn ignition switch ON.

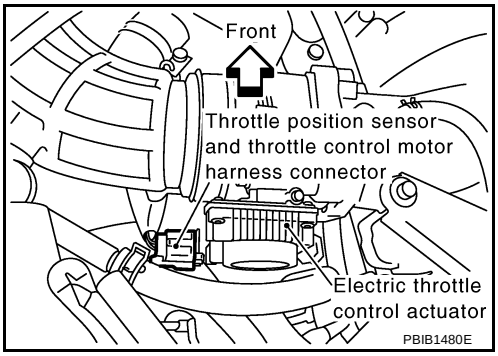

3. Check voltage between electric throttle control actuator terminal 1 and ground with CONSULT-II or tester.

Voltage: Approximately 5V

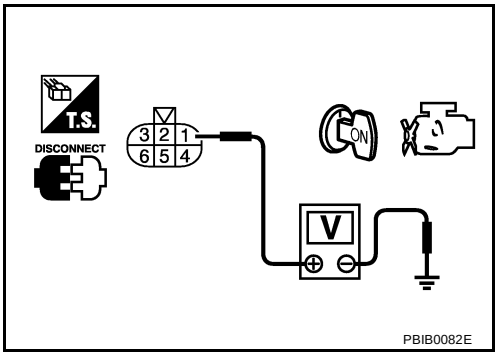

OK or NG

OK >> GO TO 7.
NG >> GO TO 3.

3. CHECK THROTTLE POSITION SENSOR 1 POWER SUPPLY CIRCUIT-II

1. Turn ignition switch OFF.
2. Disconnect ECM harness connector.
3. Check harness continuity between electric throttle control actuator terminal 1 and ECM terminal 47. Refer to Wiring Diagram.

Continuity should exist.

OK or NG

OK >> GO TO 4.
NG >> Repair open circuit.

4. CHECK THROTTLE POSITION SENSOR 1 POWER SUPPLY CIRCUIT-III

Check harness for short to power and short to ground, between the following terminals.

ECM terminal	Sensor terminal	Reference Wiring Diagram
47	Electric throttle control actuator terminal 1	EC-922
91	APP sensor terminal 4	EC-1311

OK or NG

OK >> GO TO 5.
NG >> Repair short to ground or short to power in harness or connectors.

5. CHECK APP SENSOR

Refer to EC-1315, "Component Inspection" .

OK or NG

OK >> GO TO 11.
NG >> GO TO 6.

6. REPLACE ACCELERATOR PEDAL ASSEMBLY

1. Replace accelerator pedal assembly.
2. Perform EC-786, "Accelerator Pedal Released Position Learning" .
3. Perform EC-786, "Throttle Valve Closed Position Learning" .
4. Perform EC-787, "Idle Air Volume Learning" .

>> **INSPECTION END**

7. CHECK THROTTLE POSITION SENSOR 1 GROUND CIRCUIT FOR OPEN AND SHORT

1. Turn ignition switch OFF.
2. Disconnect ECM harness connector.
3. Check harness continuity between electric throttle control actuator terminal 5 and ECM terminal 66. Refer to Wiring Diagram.

Continuity should exist.

4. Also check harness for short to ground and short to power.

OK or NG

OK >> GO TO 8.
NG >> Repair open circuit or short to ground or short to power in harness or connectors.

8. CHECK THROTTLE POSITION SENSOR 1 INPUT SIGNAL CIRCUIT FOR OPEN AND SHORT

1. Check harness continuity between ECM terminal 50 and electric throttle control actuator terminal 4. Refer to Wiring Diagram.

Continuity should exist.

2. Also check harness for short to ground and short to power.

OK or NG

OK >> GO TO 9.
NG >> Repair open circuit or short to ground or short to power in harness or connectors.

9. CHECK THROTTLE POSITION SENSOR

Refer to EC-926, "Component Inspection" .

OK or NG

OK >> GO TO 11.
NG >> GO TO 10.

10. REPLACE ELECTRIC THROTTLE CONTROL ACTUATOR

1. Replace the electric throttle control actuator.
2. Perform EC-786, "Throttle Valve Closed Position Learning" .
3. Perform EC-787, "Idle Air Volume Learning" .

>> **INSPECTION END**

11. CHECK INTERMITTENT INCIDENT

Refer to EC-854, "TROUBLE DIAGNOSIS FOR INTERMITTENT INCIDENT" .

>> **INSPECTION END**

Component Inspection

ABS007MV

THROTTLE POSITION SENSOR

1. Reconnect all harness connectors disconnected.
2. Perform EC-786, "Throttle Valve Closed Position Learning" .
3. Turn ignition switch ON.
4. Set selector lever to D position.
5. Check voltage between ECM terminals 50 (TP sensor 1 signal), 69 (TP sensor 2 signal) and ground under the following conditions.

Terminal	Accelerator pedal	Voltage
50 (Throttle position sensor 1)	Fully released	More than 0.36V
	Fully depressed	Less than 4.75V
69 (Throttle position sensor 2)	Fully released	Less than 4.75V
	Fully depressed	More than 0.36V

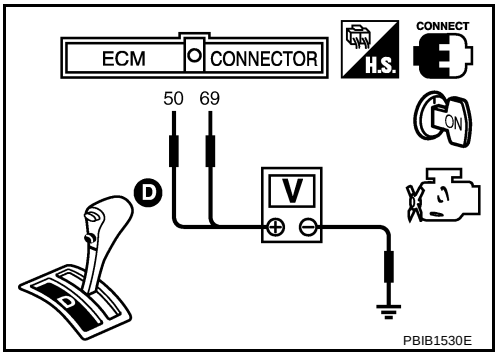

6. If NG, replace electric throttle control actuator and go to the next step.
7. Perform EC-786, "Throttle Valve Closed Position Learning" .
8. Perform EC-787, "Idle Air Volume Learning" .

Removal and Installation

ABS007MW

ELECTRIC THROTTLE CONTROL ACTUATOR

Refer to EM-178, "INTAKE MANIFOLD" .

DTC P0300 - P0308 MULTIPLE CYLINDER MISFIRE, NO. 1 - 8 CYLINDER MISFIRE

PFP:00000

On Board Diagnosis Logic

ABS00E58

When a misfire occurs, engine speed will fluctuate. If the engine speed fluctuates enough to cause the crankshaft position (CKP) sensor (POS) signal to vary, ECM can determine that a misfire is occurring.

Sensor	Input Signal to ECM	ECM function
Crankshaft position sensor (POS)	Engine speed	On board diagnosis of misfire

The misfire detection logic consists of the following two conditions.

1. One Trip Detection Logic (Three Way Catalyst Damage)
   On the first trip that a misfire condition occurs that can damage the three way catalyst (TWC) due to overheating, the MIL will blink.
   When a misfire condition occurs, the ECM monitors the CKP sensor signal every 200 engine revolutions for a change.
   When the misfire condition decreases to a level that will not damage the TWC, the MIL will turn off.
   If another misfire condition occurs that can damage the TWC on a second trip, the MIL will blink.
   When the misfire condition decreases to a level that will not damage the TWC, the MIL will remain on.
   If another misfire condition occurs that can damage the TWC, the MIL will begin to blink again.
2. Two Trip Detection Logic (Exhaust quality deterioration)
   For misfire conditions that will not damage the TWC (but will affect vehicle emissions), the MIL will only light when the misfire is detected on a second trip. During this condition, the ECM monitors the CKP sensor signal every 1,000 engine revolutions.
   A misfire malfunction can be detected on any one cylinder or on multiple cylinders.

DTC No.	Trouble diagnosis name	DTC detecting condition	Possible cause
P0300 0300	Multiple cylinder misfire detected	Multiple cylinder misfire.	● Improper spark plug ● Insufficient compression ● Incorrect fuel pressure ● The injector circuit is open or shorted ● Fuel injector ● Intake air leak ● The ignition signal circuit is open or shorted ● Lack of fuel ● Drive plate ● Heated oxygen sensor 1 ● Incorrect PCV hose connection
P0301 0301	No.1 cylinder misfire detected	No. 1 cylinder misfires.	
P0302 0302	No. 2 cylinder misfire detected	No. 2 cylinder misfires.	
P0303 0303	No. 3 cylinder misfire detected	No. 3 cylinder misfires.	
P0304 0304	No. 4 cylinder misfire detected	No. 4 cylinder misfires.	
P0305 0305	No. 5 cylinder misfire detected	No. 5 cylinder misfires.	
P0306 0306	No. 6 cylinder misfire detected	No. 6 cylinder misfires.	
P0307 0307	No. 7 cylinder misfire detected	No. 7 cylinder misfires.	
P0308 0308	No. 8 cylinder misfire detected	No. 8 cylinder misfires.	

DTC Confirmation Procedure

ABS00E59

CAUTION:
Always drive vehicle in safe manner according to traffic conditions and obey all traffic laws when driving.

NOTE:
If DTC Confirmation Procedure has been previously conducted, always turn ignition switch OFF and wait at least 10 seconds before conducting the next test.

WITH CONSULT-II

1. Turn ignition switch ON, and select “DATA MONITOR” mode with CONSULT-II.
2. Start engine and warm it up to normal operating temperature.
3. Turn ignition switch OFF and wait at least 10 seconds.
4. Restart engine and let it idle for about 15 minutes.
5. If 1st trip DTC is detected, go to EC-1024, "Diagnostic Procedure" .

   NOTE:
   If 1st trip DTC is not detected during above procedure, performing the following procedure is advised.

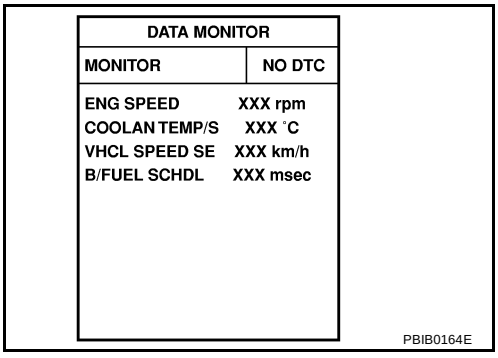

a. Turn ignition switch OFF and wait at least 10 seconds.
b. Start engine and drive the vehicle under the similar conditions to (1st trip) Freeze Frame Data for a certain time. Refer to the table below.
   Hold the accelerator pedal as steady as possible.

   The similar conditions to (1st trip) Freeze Frame Data means the vehicle operation that the following conditions should be satisfied at the same time.

Engine speed	Engine speed in the freeze frame data ± 400 rpm
Vehicle speed	Vehicle speed in the freeze frame data ± 10 km/h (6 MPH)
Engine coolant temperature (T) condition	When the freeze frame data shows lower than 70 °C (158 °F), T should be lower than 70 °C (158 °F).
	When the freeze frame data shows higher than or equal to 70 °C (158 °F), T should be higher than or equal to 70 °C (158 °F).

The time to driving varies according to the engine speed in the freeze frame data.

Engine speed	Time
Around 1,000 rpm	Approximately 10 minutes
Around 2,000 rpm	Approximately 5 minutes
More than 3,000 rpm	Approximately 3.5 minutes

WITH GST

Follow the procedure “WITH CONSULT-II” above.

Diagnostic Procedure

ABS00E5A

1. CHECK FOR INTAKE AIR LEAK

1. Start engine and run it at idle speed.
2. Listen for the sound of the intake air leak.
3. Check PCV hose connection.

OK or NG

OK >> GO TO 2.
NG >> Discover air leak location and repair.

2. CHECK FOR EXHAUST SYSTEM CLOGGING

1. Stop engine
2. Turn ignition switch OFF
3. Visually check exhaust tube, three way catalyst (manifold) and muffler for dents.

OK or NG

OK (With CONSULT-II)>>GO TO 3.
OK (Without CONSULT-II)>>GO TO 4.
NG >> Repair or replace it.

3. PERFORM POWER BALANCE TEST

With CONSULT-II

1. Perform “POWER BALANCE” in “ACTIVE TEST” mode.
2. Is there any cylinder which does not produce a momentary engine speed drop?

ACTIVE TEST	
POWER BALANCE	
MONITOR	
ENG SPEED	XXX rpm
MAS A/F SE-B1	XXX V

PBIB0133E

Yes or No

Yes >> GO TO 4.
No >> GO TO 10.

4. CHECK FUNCTION OF INJECTOR-I

Without CONSULT-II

1. Turn ignition switch OFF.
2. Disconnect harness connectors F21, F201 (bank 1) and F41, F221 (bank 2).

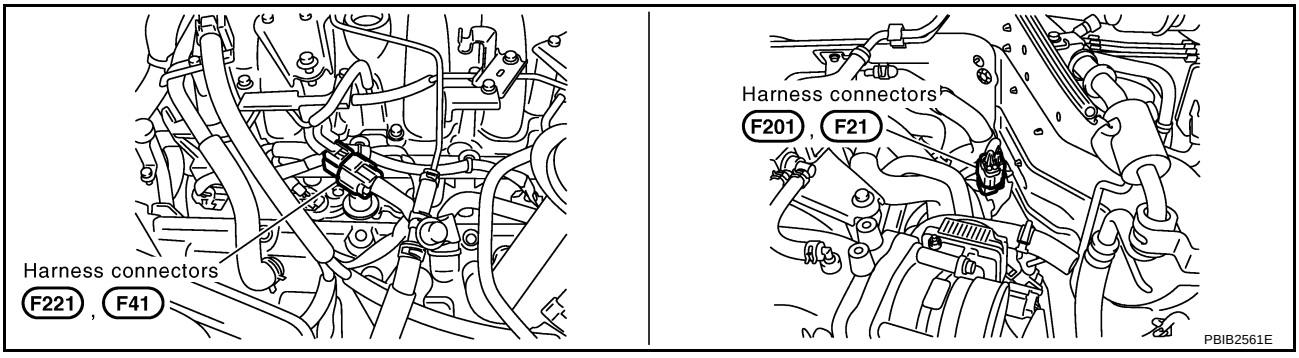

3. Turn ignition switch ON.
4. Check voltage between the following;
   harness connector F21 terminal 5 and ground,
   harness connector F41 terminal 5 and ground
   with CONSULT-II or tester.

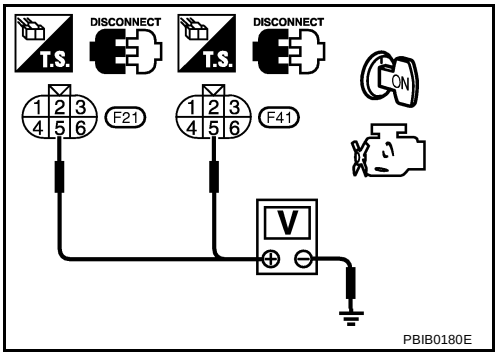

Voltage: Battery voltage

5. Turn ignition switch OFF.
6. Disconnect ECM harness connector.
7. Check harness continuity between the following terminals.

Cylinder	Harness connector terminal	ECM terminal
1	F21 terminal 3	23
3	F21 terminal 2	22
5	F21 terminal 1	21
7	F21 terminal 6	44
2	F41 terminal 3	42
4	F41 terminal 2	41
6	F41 terminal 1	40
8	F41 terminal 6	63

Continuity should exist.

8. Also check harness for short to ground and short to power.

OK or NG

OK >> GO TO 5.
NG >> Perform trouble diagnosis for INJECTOR CIRCUIT, refer to EC-1351 .

5. CHECK FUNCTION OF INJECTOR-II

Provide battery voltage between the following terminals, and then interrupt it. Listen to each injector operating sound.

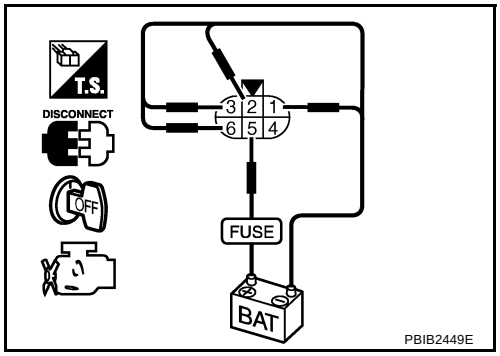

Cylinder	Harness connector	terminal	
		(+)	(–)
1	F201	5	3
3			2
5			1
7			6
2	F221	5	3
4			2
6			1
8			6

Operating sound should exist.

OK or NG

OK >> GO TO 6.

NG >> Perform trouble diagnosis for INJECTOR CIRCUIT, refer to EC-1351 .

6. CHECK FUNCTION OF IGNITION COIL-I

CAUTION:
Do the following procedure in the place where ventilation is good without the combustible.

1. Turn ignition switch OFF.
2. Remove fuel pump fuse in IPDM E/R to release fuel pressure.

   NOTE:
   Do not use CONSULT-II to release fuel pressure, or fuel pressure applies again during the following procedure.
3. Start engine.
4. After engine stalls, crank it two or three times to release all fuel pressure.
5. Turn ignition switch OFF.
6. Remove all ignition coil harness connectors to avoid the electrical discharge from the ignition coils.
7. Remove ignition coil and spark plug of the cylinder to be checked.

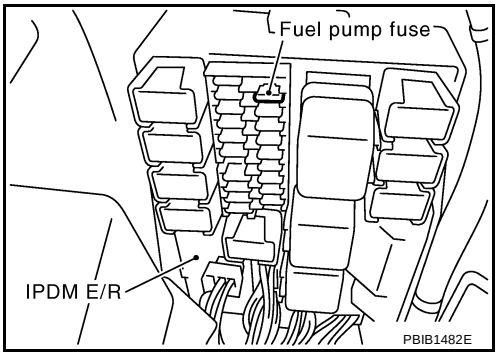

8. Crank engine for five seconds or more to remove combustion gas in the cylinder.
9. Connect spark plug and harness connector to ignition coil.
10. Fix ignition coil using a rope etc. with gap of 13 - 17 mm between the edge of the spark plug and grounded metal portion as shown in the figure.
11. Crank engine for about three seconds, and check whether spark is generated between the spark plug and the grounded metal portion.

    Spark should be generated.

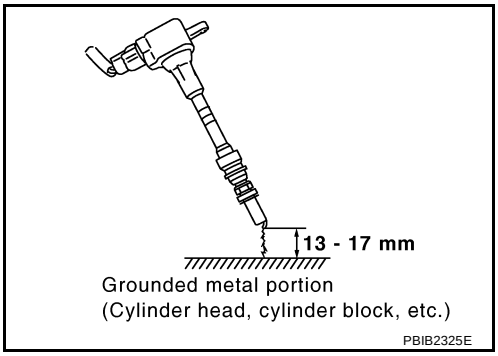

CAUTION:
- **Do not approach to the spark plug and the ignition coil within 50cm. Be careful not to get an electrical shock while checking, because the electrical discharge voltage becomes 20kV or more.**
- **It might cause to damage the ignition coil if the gap of 17 mm or more is taken.**

NOTE:
When the gap is 13 mm or less, the spark might be generated even if the coil is malfunctioning.

OK or NG

OK >> GO TO 10.
NG >> GO TO 7.

7. CHECK FUNCTION OF IGNITION COIL-II

1. Turn ignition switch OFF.
2. Disconnect spark plug and connect a known-good spark plug.
3. Crank engine for about three seconds, and recheck whether spark is generated between the spark plug and the grounded metal portion.

   Spark should be generated.

OK or NG

OK >> GO TO 8.
NG >> Check ignition coil, power transistor and their circuits. Refer to EC-1339 .

8. CHECK SPARK PLUG

Check the initial spark plug for fouling, etc.

OK or NG

OK >> Replace spark plug(s) with standard type one(s). For spark plug type, refer to EM-190 .

NG >> 1. Repair or clean spark plug.
2. GO TO 9.

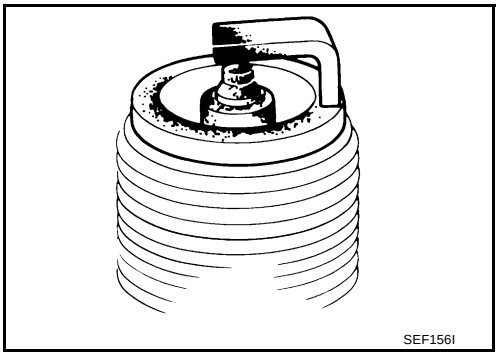

9. CHECK FUNCTION OF IGNITION COIL-III

1. Reconnect the initial spark plugs.
2. Crank engine for about three seconds, and recheck whether spark is generated between the spark plug and the grounded portion.

Spark should be generated.

OK or NG

OK >> **INSPECTION END**

NG >> Replace spark plug(s) with standard type one(s). For spark plug type, refer to EM-190 .

10. CHECK COMPRESSION PRESSURE

Check compression pressure. Refer to EM-229, "CHECKING COMPRESSION PRESSURE" ,.

Standard:	**1,320 kPa (13.5 kg/cm^2 , 191 psi)/300 rpm**
Minimum:	**1,130 kPa (11.5 kg/cm^2 , 164 psi)/300 rpm**
Difference between each cylinder:	**98 kPa (1.0 kg/cm^2 , 14 psi)/300 rpm**

OK or NG

OK >> GO TO 11.

NG >> Check pistons, piston rings, valves, valve seats and cylinder head gaskets.

11. CHECK FUEL PRESSURE

1. Install all removed parts.
2. Release fuel pressure to zero. Refer to EC-789, "FUEL PRESSURE RELEASE" .
3. Install fuel pressure gauge and check fuel pressure. Refer to EC-789, "FUEL PRESSURE CHECK" .

At idle: Approx. 350 kPa (3.57 kg/cm^2 , 51 psi)

OK or NG

OK >> GO TO 13.

NG >> GO TO 12.

12. DETECT MALFUNCTIONING PART

Check the following.

- Fuel pump and circuit (Refer to EC-1358, "FUEL PUMP CIRCUIT" .)
- Fuel pressure regulator (Refer to EC-789, "FUEL PRESSURE CHECK" .)
- Fuel lines (Refer to FL-3, "Checking Fuel Lines" .)
- Fuel filter for clogging

>> Repair or replace.

13. CHECK IGNITION TIMING

Check the following items. Refer to EC-769, "Basic Inspection" .

Items	Specifications
Target idle speed	650 ± 50 rpm (in P or N position)
Ignition timing	12 ± 5° BTDC (in P or N position)

OK or NG

OK >> GO TO 14.
NG >> Follow the Basic Inspection.

14. CHECK HEATED OXYGEN SENSOR 1 BANK 1/BANK 2

Refer to EC-942, "Component Inspection" .

OK or NG

OK >> GO TO 15.
NG >> Replace malfunctioning heated oxygen sensor 1.

15. CHECK MASS AIR FLOW SENSOR

With CONSULT-II

Check mass air flow sensor signal in “DATA MONITOR” mode with CONSULT-II.

2.0 - 6.0 g·m/sec: at idling
7.0 - 20.0 g·m/sec: at 2,500 rpm

With GST

Check mass air flow sensor signal in “Service $01” with GST.

2.0 - 6.0 g·m/sec: at idling
7.0 - 20.0 g·m/sec: at 2,500 rpm

OK or NG

OK >> GO TO 16.
NG >> Check connectors for rusted terminals or loose connections in the mass air flow sensor circuit or grounds. Refer to EC-902, "DTC P0102, P0103 MAF SENSOR" .

16. CHECK SYMPTOM MATRIX CHART

Check items on the rough idle symptom in EC-800, "Symptom Matrix Chart" .

OK or NG

OK >> GO TO 17.
NG >> Repair or replace.

17. ERASE THE 1ST TRIP DTC

Some tests may cause a 1st trip DTC to be set.
Erase the 1st trip DTC from the ECM memory after performing the tests. Refer to EC-758, "HOW TO ERASE EMISSION-RELATED DIAGNOSTIC INFORMATION" .

>> GO TO 18.

18. CHECK INTERMITTENT INCIDENT

Refer to EC-854, "TROUBLE DIAGNOSIS FOR INTERMITTENT INCIDENT" .

>> **INSPECTION END**

DTC P0327, P0328, P0332, P0333 KS

PFP:22060

Component Description

ABS007YK

The knock sensor is attached to the cylinder block. It senses engine knocking using a piezoelectric element. A knocking vibration from the cylinder block is sensed as vibrational pressure. This pressure is converted into a voltage signal and sent to the ECM.

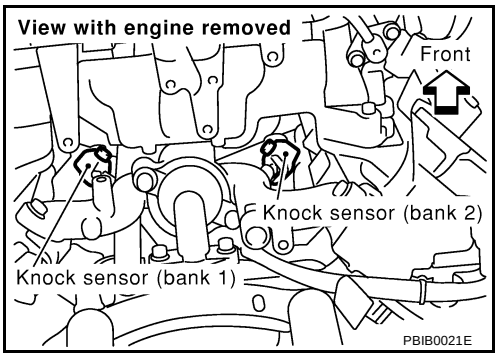

On Board Diagnosis Logic

ABS007YL

The MIL will not light up for these diagnoses.

DTC No.	Trouble diagnosis name	DTC detecting condition	Possible cause
P0327 0327 (bank 1) P0332 0332 (bank 2)	Knock sensor circuit low input	An excessively low voltage from the sensor is sent to ECM.	● Harness or connectors (The sensor circuit is open or shorted.) ● Knock sensor
P0328 0328 (bank 1) P0333 0333 (bank 2)	Knock sensor circuit high input	An excessively high voltage from the sensor is sent to ECM.	

DTC Confirmation Procedure

ABS007YM

NOTE:
If DTC Confirmation Procedure has been previously conducted, always turn ignition switch OFF and wait at least 10 seconds before conducting the next test.

TESTING CONDITION:
Before performing the following procedure, confirm that battery voltage is more than 10V at idle.

WITH CONSULT-II

1. Turn ignition switch ON and select “DATA MONITOR” mode with CONSULT-II.
2. Start engine and run it for at least 5 seconds at idle speed.
3. If 1st trip DTC is detected, go to EC-1033, "Diagnostic Procedure" .

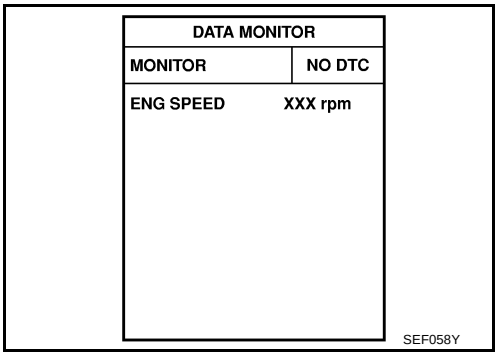

WITH GST

Follow the procedure “WITH CONSULT-II” above.

Wiring Diagram

ABS007YN

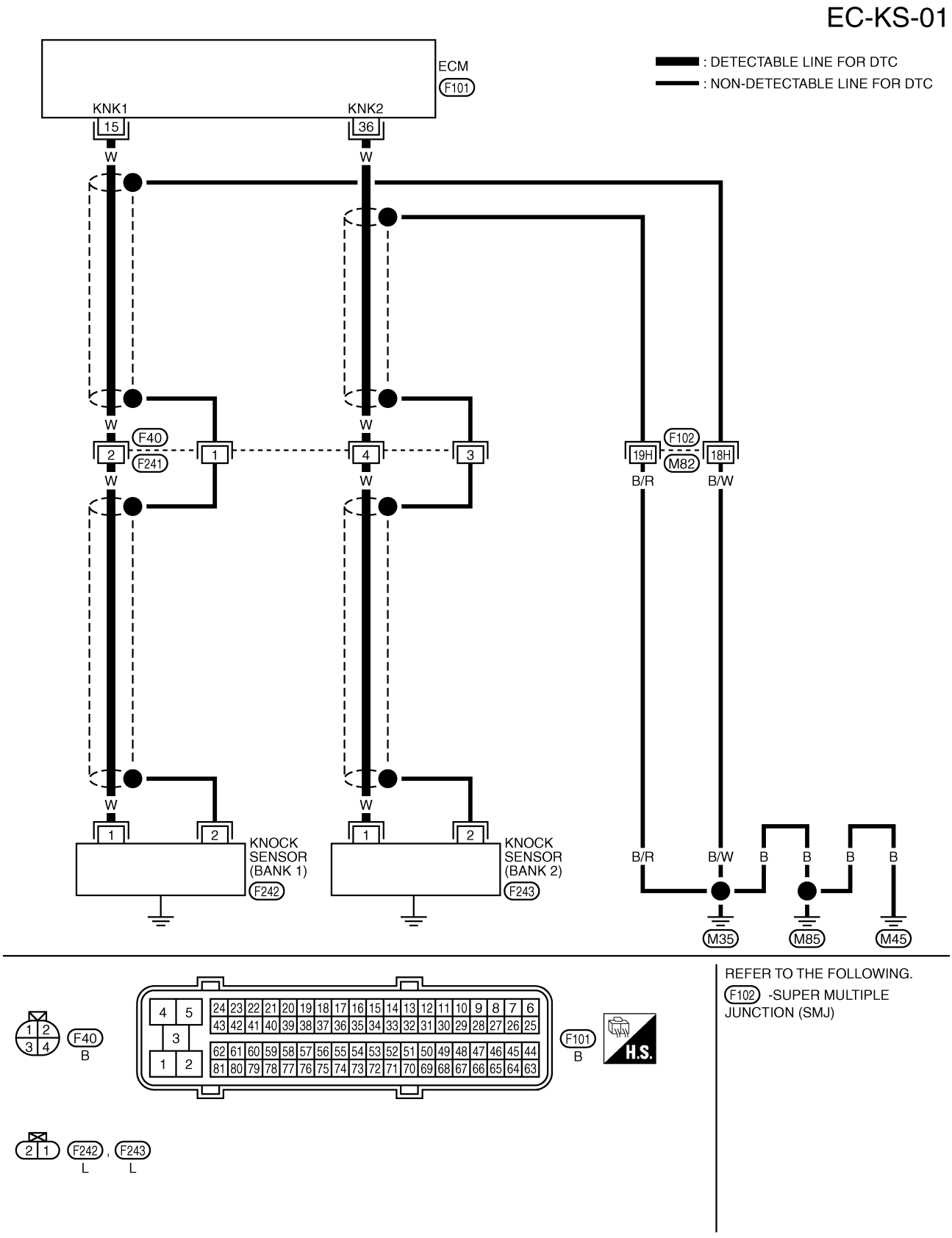

Specification data are reference values and are measured between each terminal and ground.

CAUTION:
Do not use ECM ground terminals when measuring input/output voltage. Doing so may result in damage to the ECM's transistor. Use a ground other than ECM terminals, such as the ground.

TERMINAL NO.	WIRE COLOR	ITEM	CONDITION	DATA (DC Voltage)
15 36	W W	Knock sensor (bank 1) Knock sensor (bank 2)	**[Engine is running]** ● Idle speed	Approximately 2.5V

Diagnostic Procedure

ABS007YO

1. CHECK KNOCK SENSOR INPUT SIGNAL CIRCUIT FOR OPEN AND SHORT-I

1. Turn ignition switch OFF.
2. Disconnect ECM harness connector.
3. Check resistance between ECM terminals 15, 36 and ground. Refer to Wiring Diagram.

   NOTE:
   It is necessary to use an ohmmeter which can measure more than 10 MΩ.

   Resistance: Approximately 532 - 588 kΩ [at 20°C (68°F)]

4. Also check harness for short to ground and short to power.

OK or NG

OK >> GO TO 5.
NG >> GO TO 2.

2. CHECK KNOCK SENSOR INPUT SIGNAL CIRCUIT FOR OPEN AND SHORT-II

1. Disconnect knock sensor harness connector.
2. Check harness continuity between the following;
   ECM terminal 15 and knock sensor (bank1) terminal 1,
   ECM terminal 36 and knock sensor (bank 2) terminal 1.
   Refer to Wiring Diagram.

   Continuity should exist.

3. Also check harness for short to ground and short to power.

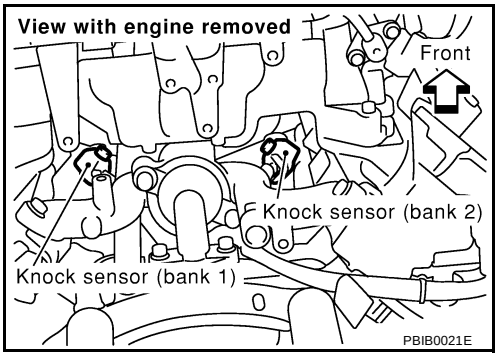

OK or NG

OK >> GO TO 4.
NG >> GO TO 3.

3. DETECT MALFUNCTIONING PART

Check the following.

- Harness connectors F40, F241
- Harness for open or short between ECM and knock sensor

>> Repair open circuit or short to ground or short to power in harness or connectors.

4. CHECK KNOCK SENSOR

Refer to EC-1035, "Component Inspection" .

OK or NG

OK >> GO TO 5.
NG >> Replace knock sensor.

5. CHECK GROUND CONNECTIONS

Loosen and retighten three ground screws on the body.
Refer to EC-861, "Ground Inspection" .

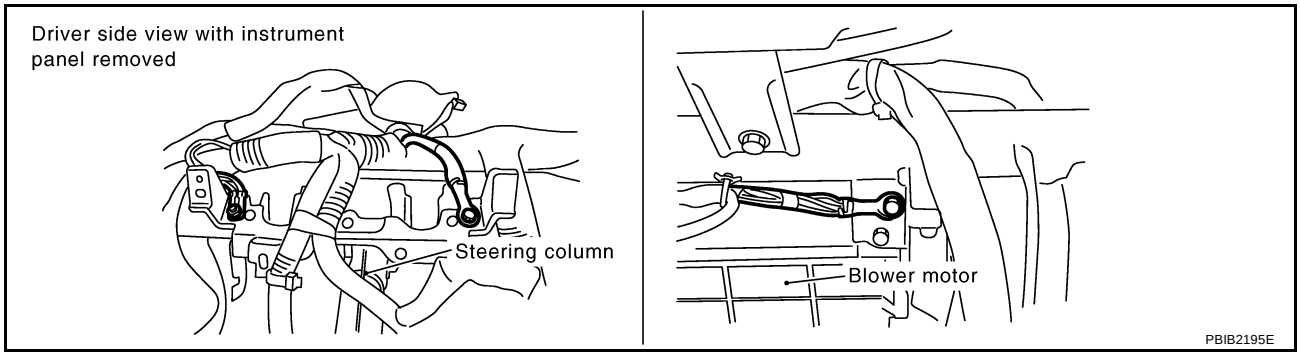

OK or NG

OK >> GO TO 6.
NG >> Repair or replace ground connections.

6. CHECK KNOCK SENSOR SHIELD CIRCUIT FOR OPEN AND SHORT

1. Disconnect knock sensor harness connector.
2. Check harness continuity between knock sensor terminal 2 and ground. Refer to Wiring Diagram.

   Continuity should exist.

3. Also check harness for short to power.

OK or NG

OK >> GO TO 8.
NG >> GO TO 7.

7. DETECT MALFUNCTIONING PART

Check the following.

- Harness connectors F40, F241
- Harness connectors F102, M82
- Harness for open or short between knock sensor terminal 2 and ground

>> Repair open circuit or short to power in harness or connectors.

8. CHECK INTERMITTENT INCIDENT

Refer to EC-854, "TROUBLE DIAGNOSIS FOR INTERMITTENT INCIDENT" .

>> **INSPECTION END**

Component Inspection

ABS007YP

KNOCK SENSOR

Check resistance between knock sensor terminal 1 and ground.

NOTE:
It is necessary to use an ohmmeter which can measure more than 10 MΩ.

Resistance: Approximately 532 - 588 kΩ [at 20°C (68°F)]

CAUTION:
Do not use any knock sensors that have been dropped or physically damaged. Use only new ones.

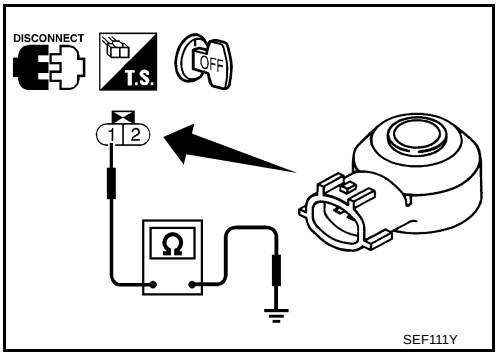

Removal and Installation

ABS007YQ

KNOCK SENSOR

Refer to EM-245, "CYLINDER BLOCK" .

DTC P0335 CKP SENSOR (POS)

PFP:23731

Component Description

ABS007N7

The crankshaft position sensor (POS) is located on the A/T assembly facing the gear teeth (cogs) of the signal plate. It detects the fluctuation of the engine revolution.
The sensor consists of a permanent magnet and Hall IC.
When the engine is running, the high and low parts of the teeth cause the gap with the sensor to change.
The changing gap causes the magnetic field near the sensor to change.
Due to the changing magnetic field, the voltage from the sensor changes.
The ECM receives the voltage signal and detects the fluctuation of the engine revolution.
ECM receives the signals as shown in the figure.

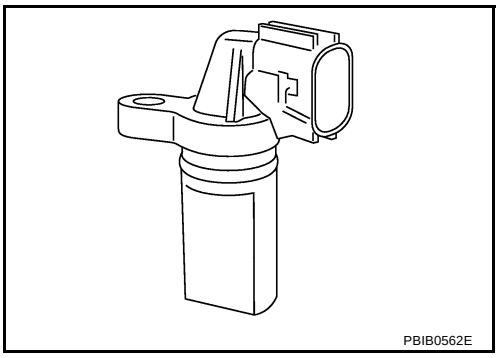

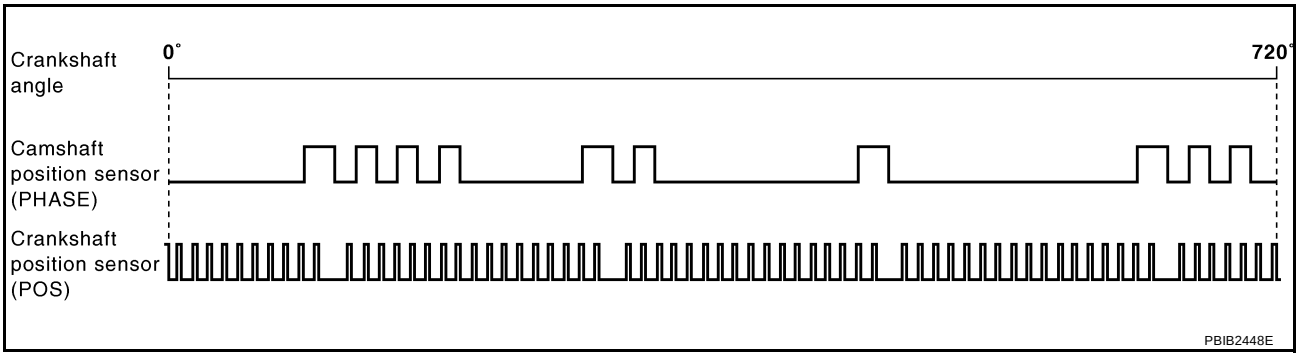

CONSULT-II Reference Value in Data Monitor Mode

ABS007N8

Specification data are reference values.

MONITOR ITEM	CONDITION	SPECIFICATION
ENG SPEED	● Run engine and compare CONSULT-II value with the tachometer indication.	Almost the same speed as the tachometer indication.

On Board Diagnosis Logic

ABS007N9

DTC No.	Trouble diagnosis name	DTC detecting condition	Possible cause
P0335 0335	Crankshaft position sensor (POS) circuit	● The crankshaft position sensor (POS) signal is not detected by the ECM during the first few seconds of engine cranking. ● The proper pulse signal from the crankshaft position sensor (POS) is not sent to ECM while the engine is running. ● The crankshaft position sensor (POS) signal is not in the normal pattern during engine running.	● Harness or connectors (The sensor circuit is open or shorted) ● Crankshaft position sensor (POS) ● Signal plate

DTC Confirmation Procedure

ABS007NA

NOTE:
If DTC Confirmation Procedure has been previously conducted, always turn ignition switch OFF and wait at least 10 seconds before conducting the next test.
TESTING CONDITION:
Before performing the following procedure, confirm that battery voltage is more than 10.5V with ignition switch ON.

WITH CONSULT-II

1. Turn ignition switch ON and select “DATA MONITOR” mode with CONSULT-II.
2. Crank engine for at least 2 seconds and run it for at least 5 seconds at idle speed.
3. If 1st trip DTC is detected, go to EC-1039, "Diagnostic Procedure" .

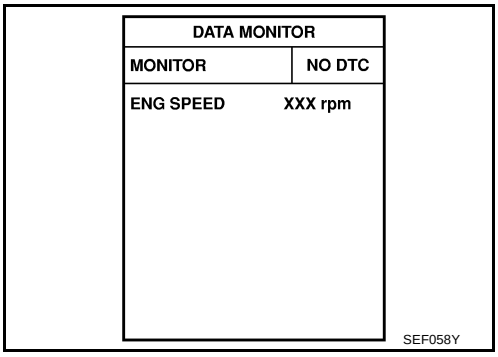

WITH GST

Follow the procedure “WITH CONSULT-II” above.

Wiring Diagram

ABS007NB

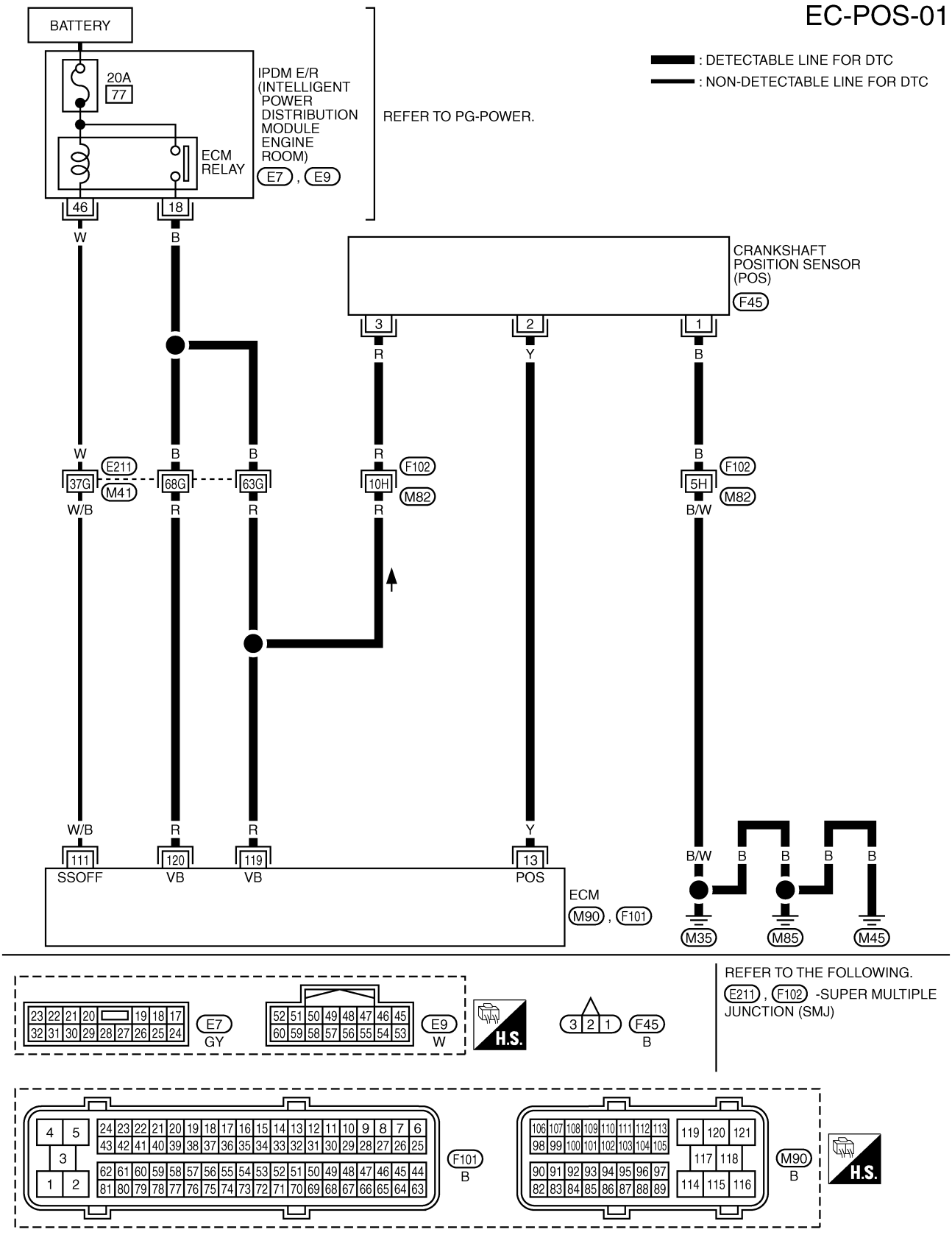

TBWM0412E

Specification data are reference values and are measured between each terminal and ground.
Pulse signal is measured by CONSULT-II.

CAUTION:
Do not use ECM ground terminals when measuring input/output voltage. Doing so may result in damage to the ECM's transistor. Use a ground other than ECM terminals, such as the ground.

TERMINAL NO.	WIRE COLOR	ITEM	CONDITION	DATA (DC Voltage)
13	Y	Crankshaft position sensor (POS)	**[Engine is running]** ● **Warm-up condition** ● Idle speed **NOTE:** The pulse cycle changes depending on rpm at idle	1.0 - 2.0V★ 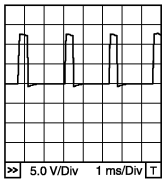 PBIB1041E
			[Engine is running] ● Engine speed: 2,000 rpm	1.0 - 2.0V★ 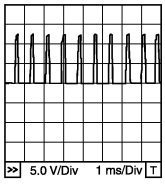 PBIB1042E

★: Average voltage for pulse signal (Actual pulse signal can be confirmed by oscilloscope.)

Diagnostic Procedure

ABS007NC

1. CHECK GROUND CONNECTIONS

1. Turn ignition switch OFF.
2. Loosen and retighten three ground screws on the body.
   Refer to EC-861, "Ground Inspection" .

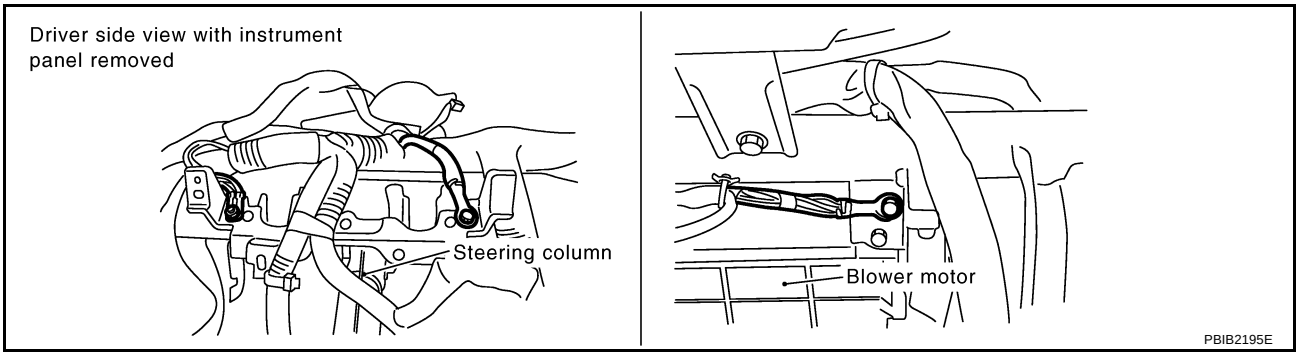

OK or NG

OK >> GO TO 2.
NG >> Repair or replace ground connections.

2. CHECK CRANKSHAFT POSITION (CKP) SENSOR (POS) POWER SUPPLY CIRCUIT

1. Disconnect crankshaft position (CKP) sensor (POS) harness connector.
2. Turn ignition switch ON.

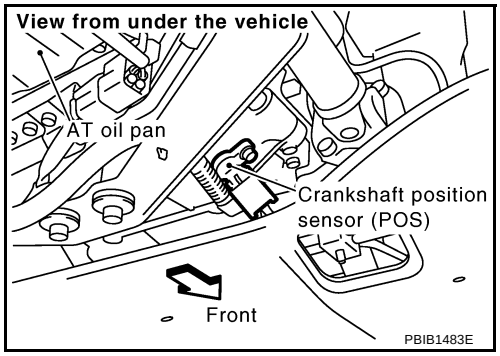

3. Check voltage between CKP sensor (POS) terminal 3 and ground with CONSULT-II or tester.

Voltage: Battery voltage

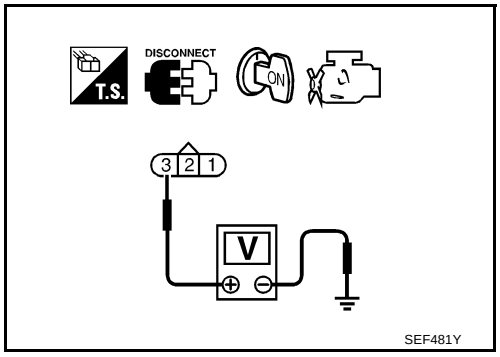

OK or NG

OK >> GO TO 4.
NG >> GO TO 3.

3. DETECT MALFUNCTIONING PART

Check the following.

- Harness connectors E211, M41
- Harness connectors F102, M82
- Harness for open or short between crankshaft position sensor (POS) and ECM
- Harness for open or short between crankshaft position sensor (POS) and IPDM E/R

>> Repair open circuit or short to ground or short to power in harness or connectors.

4. CHECK CKP SENSOR (POS) GROUND CIRCUIT FOR OPEN AND SHORT

1. Turn ignition switch OFF.
2. Check harness continuity between CKP sensor (POS) terminal 1 and ground.
   Refer to Wiring Diagram.

Continuity should exist.

3. Also check harness for short to power.

OK or NG

OK >> GO TO 6.
NG >> GO TO 5.

5. DETECT MALFUNCTIONING PART

Check the following.

- Harness connectors F102, M82
- Harness for open or short between crankshaft position sensor (POS) and ground

>> Repair open circuit or short to power in harness or connectors.

6. CHECK CKP SENSOR (POS) INPUT SIGNAL CIRCUIT FOR OPEN AND SHORT

1. Disconnect ECM harness connector.
2. Check harness continuity between ECM terminal 13 and CKP sensor (POS) terminal 2. Refer to Wiring Diagram.

   Continuity should exist.

3. Also check harness for short to ground and short to power.

OK or NG

OK >> GO TO 7.
NG >> Repair open circuit or short to ground or short to power in harness or connectors.

7. CHECK CRANKSHAFT POSITION SENSOR (POS)

Refer to EC-1042, "Component Inspection" .

OK or NG

OK >> GO TO 8.
NG >> Replace crankshaft position sensor (POS).

8. CHECK GEAR TOOTH

Visually check for chipping signal plate gear tooth.

OK or NG

OK >> GO TO 9.
NG >> Replace the signal plate.

9. CHECK INTERMITTENT INCIDENT

Refer to EC-854, "TROUBLE DIAGNOSIS FOR INTERMITTENT INCIDENT" .

>> **INSPECTION END**

Component Inspection

ABS007ND

CRANKSHAFT POSITION SENSOR (POS)

1. Loosen the fixing bolt of the sensor.
2. Disconnect crankshaft position sensor (POS) harness connector.
3. Remove the sensor.
4. Visually check the sensor for chipping.

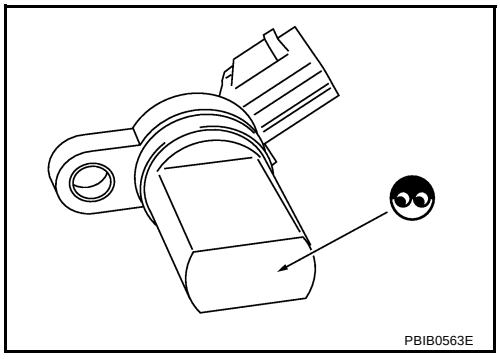

5. Check resistance as shown in the figure.

Terminal No. (Polarity)	Resistance Ω [at 25°C (77°F)]
1 (+) - 2 (-)	Except 0 or ∞
1 (+) - 3 (-)	
2 (+) - 3 (-)	

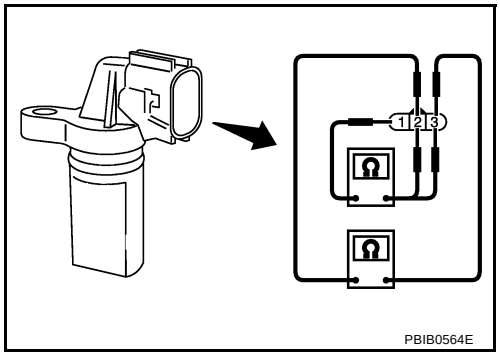

Removal and Installation

ABS007NE

CRANKSHAFT POSITION SENSOR (POS)

Refer to AT-274, "REMOVAL" .

DTC P0340 CAMSHAFT POSITION (CMP) SENSOR (PHASE)

PFP:23731

Component Description

ABS007YR

The camshaft position sensor (PHASE) senses the protrusion of exhaust valve cam sprocket to identify a particular cylinder. The camshaft position sensor (PHASE) senses the piston position.
When the crankshaft position sensor (POS) system becomes inoperative, the camshaft position sensor (PHASE) provides various controls of engine parts instead, utilizing timing of cylinder identification signals.
The sensor consists of a permanent magnet and Hall IC.
When engine is running, the high and low parts of the teeth cause the gap with the sensor to change.
The changing gap causes the magnetic field near the sensor to change.
Due to the changing magnetic field, the voltage from the sensor changes.
ECM receives the signals as shown in the figure.

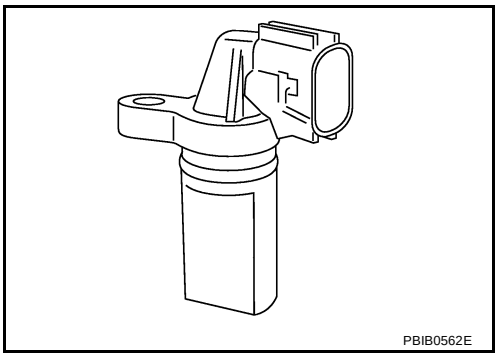

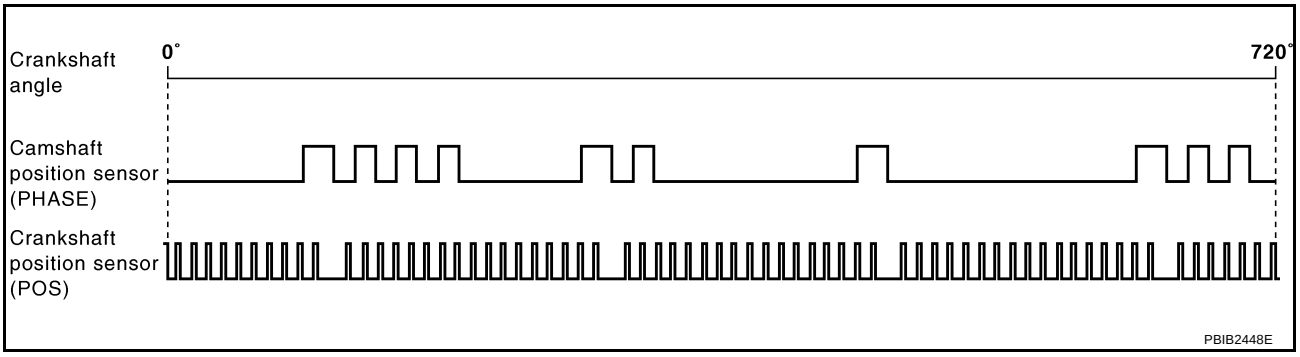

On Board Diagnosis Logic

ABS007YS

DTC No.	Trouble diagnosis name	DTC detecting condition	Possible cause
P0340 0340	Camshaft position sensor (PHASE) circuit	● The cylinder No. signal is not sent to ECM for the first few seconds during engine cranking. ● The cylinder No. signal is not sent to ECM during engine running. ● The cylinder No. signal is not in the normal pattern during engine running.	● Harness or connectors (The sensor circuit is open or shorted) ● Camshaft position sensor (PHASE) ● Camshaft sprocket (Exhaust) ● Starter motor (Refer to SC-10 .) ● Starting system circuit (Refer to SC-10 .) ● Dead (Weak) battery

DTC Confirmation Procedure

ABS007YT

NOTE:
If DTC Confirmation Procedure has been previously conducted, always turn ignition switch OFF and wait at least 10 seconds before conducting the next test.
TESTING CONDITION:
Before performing the following procedure, confirm that battery voltage is more than 10.5V with ignition switch ON.

WITH CONSULT-II

1. Turn ignition switch ON.
2. Select “DATA MONITOR” mode with CONSULT-II.
3. Crank engine for at least 2 seconds and run it for at least 5 seconds at idle speed.
4. If 1st trip DTC is detected, go to EC-1046, "Diagnostic Procedure" .
   If 1st trip DTC is not detected, go to next step.
5. Maintaining engine speed at more than 800 rpm for at least 5 seconds.
6. If 1st trip DTC is detected, go to EC-1046, "Diagnostic Procedure" .

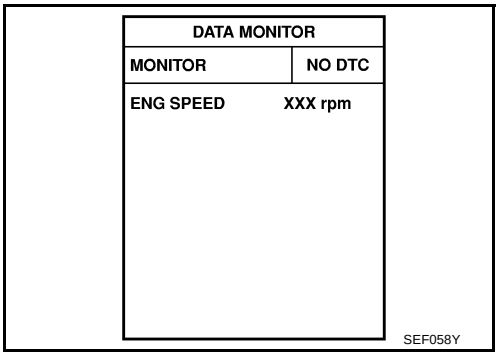

WITH GST

Follow the procedure “WITH CONSULT-II” above.

Wiring Diagram

ABS007YU

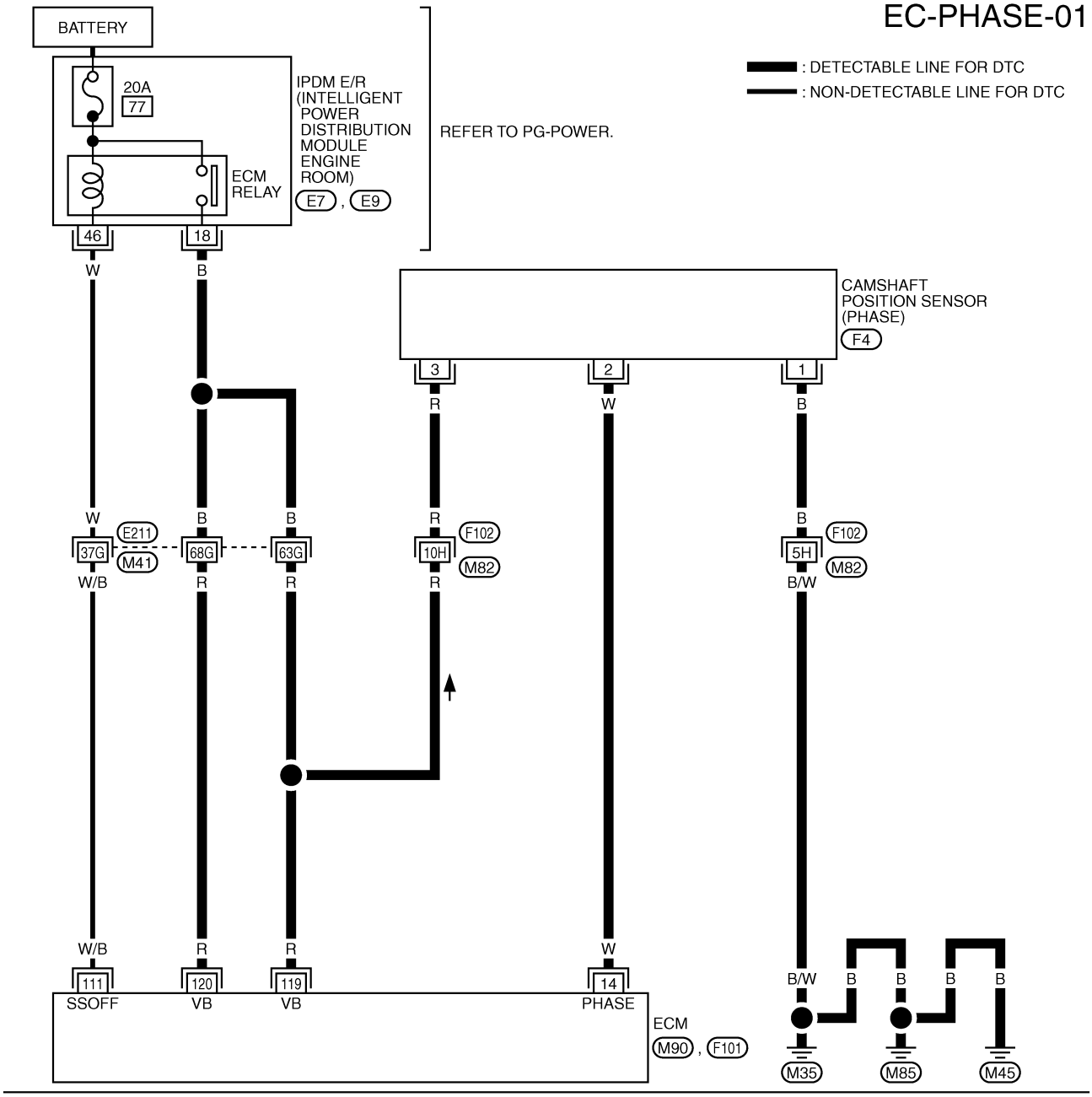

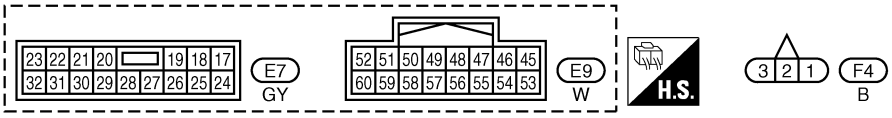

REFER TO THE FOLLOWING.
E211 , F102 -SUPER MULTIPLE JUNCTION (SMJ)

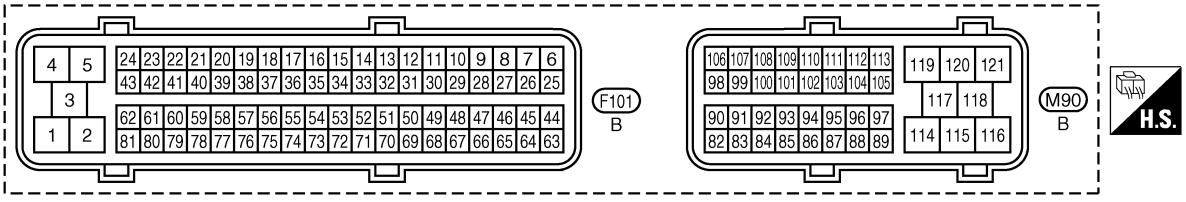

TBWM0413E

Specification data are reference values and are measured between each terminal and ground.
Pulse signal is measured by CONSULT-II.

CAUTION:
Do not use ECM ground terminals when measuring input/output voltage. Doing so may result in damage to the ECM's transistor. Use a ground other than ECM terminals, such as the ground.

TERMINAL NO.	WIRE COLOR	ITEM	CONDITION	DATA (DC Voltage)
14	W	Camshaft position sensor (PHASE)	**[Engine is running]** ● **Warm-up condition** ● Idle speed **NOTE:** The pulse cycle changes depending on rpm at idle	1.0 - 4.0V★ 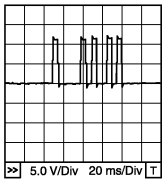 PBIB1039E
			[Engine is running] ● Engine speed: 2,000 rpm	1.0 - 4.0V★ 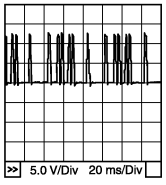 PBIB1040E

★: Average voltage for pulse signal (Actual pulse signal can be confirmed by oscilloscope.)

Diagnostic Procedure

ABS007YV

1. CHECK STARTING SYSTEM

Turn ignition switch to START position.

Does the engine turn over?
Does the starter motor operate?

Yes or No

Yes >> GO TO 2.
No >> Check starting system. (Refer toSC-10, "STARTING SYSTEM" .)

2. CHECK GROUND CONNECTIONS

1. Turn ignition switch OFF.
2. Loosen and retighten three ground screws on the body.
   Refer to EC-861, "Ground Inspection" .

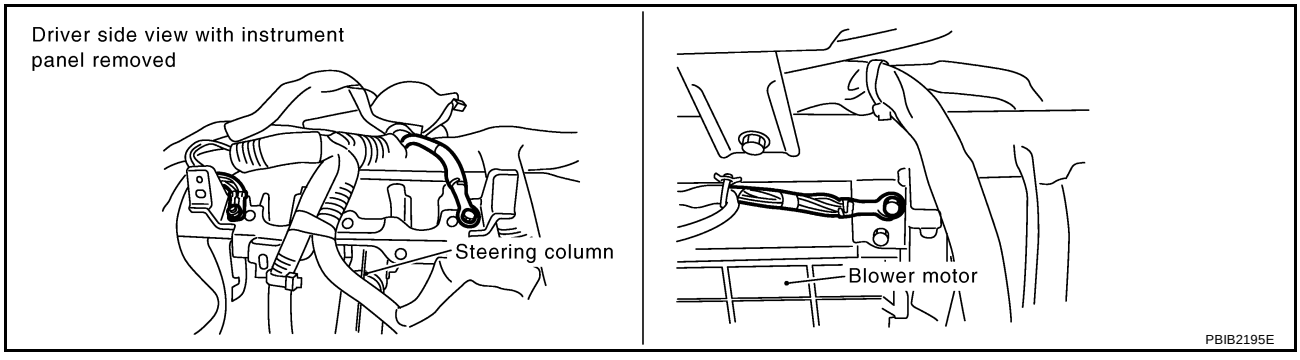

OK or NG

OK >> GO TO 3.
NG >> Repair or replace ground connections.

3. CHECK CAMSHAFT POSITION (CMP) SENSOR (PHASE) POWER SUPPLY CIRCUIT

1. Disconnect camshaft position (CMP) sensor (PHASE) harness connector.
2. Turn ignition switch ON.

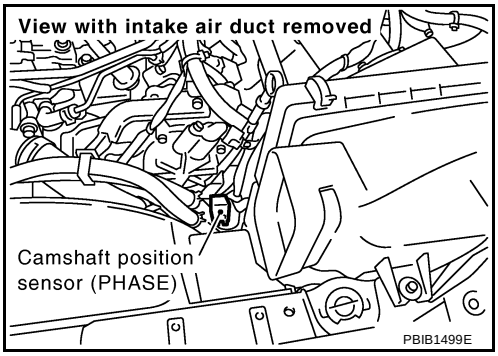

3. Check voltage between CMP sensor (PHASE) terminal 3 and ground with CONSULT-II or tester.

Voltage: Battery voltage

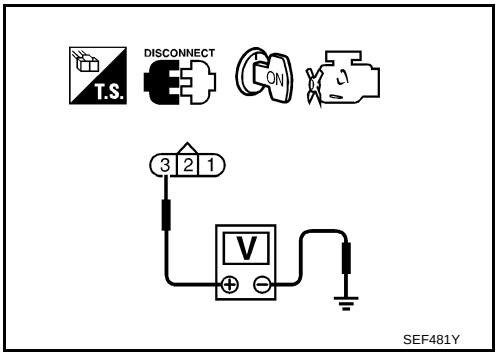

OK or NG

OK >> GO TO 5.
NG >> GO TO 4.

4. DETECT MALFUNCTIONING PART

Check the following.

- Harness connectors E211, M41
- Harness connectors F102, M82
- Harness for open or short between camshaft position sensor (PHASE) and ECM
- Harness for open or short between camshaft position sensor (PHASE) and IPDM E/R

>> Repair open circuit or short to ground or short to power in harness or connectors.

5. CHECK CMP SENSOR (PHASE) GROUND CIRCUIT FOR OPEN AND SHORT

1. Turn ignition switch OFF.
2. Check harness continuity between CMP sensor (PHASE) terminal 1 and ground.

Continuity should exist.

3. Also check harness for short to power.

OK or NG

OK >> GO TO 7.
NG >> GO TO 6.

6. DETECT MALFUNCTIONING PART

Check the following.

- Harness connectors F102, M82
- Harness for open or short between CMP sensor (PHASE) and ground

>> Repair open circuit or short to power in harness or connectors.

7. CHECK CMP SENSOR (PHASE) INPUT SIGNAL CIRCUIT FOR OPEN AND SHORT

1. Disconnect ECM harness connector.
2. Check harness continuity between ECM terminal 14 and CMP sensor (PHASE) terminal 2.
   Refer to Wiring Diagram.

   Continuity should exist.

3. Also check harness for short to ground and short to power.

OK or NG

OK >> GO TO 8.
NG >> Repair open circuit or short to ground or short to power in harness or connectors.

8. CHECK CAMSHAFT POSITION SENSOR (PHASE)

Refer to EC-1049, "Component Inspection" .

OK or NG

OK >> GO TO 9.
NG >> Replace camshaft position sensor (PHASE).

9. CHECK CAMSHAFT SPROCKET (EXHAUST)

Visually check camshaft sprocket (exhaust) for chipping.

OK or NG

OK >> GO TO 10.
NG >> Replace camshaft sprocket (exhaust).

10. CHECK INTERMITTENT INCIDENT

Refer to EC-854, "TROUBLE DIAGNOSIS FOR INTERMITTENT INCIDENT" .

>> **INSPECTION END**

Component Inspection

ABS007YW

CAMSHAFT POSITION SENSOR (PHASE)

1. Loosen the fixing bolt of the sensor.
2. Disconnect camshaft position sensor (PHASE) harness connector.
3. Remove the sensor.
4. Visually check the sensor for chipping.

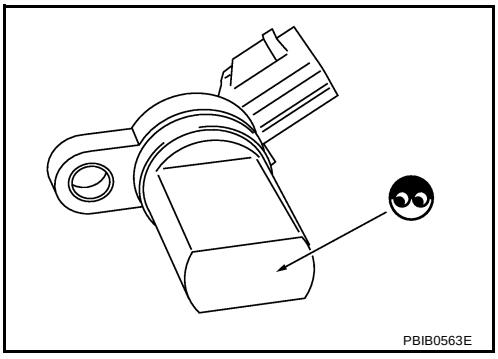

5. Check resistance as shown in the figure.

Terminal No. (Polarity)	Resistance Ω [at 25°C (77°F)]
3(+) - 1 (-)	Except 0 or ∞
2 (+) - 1 (-)	
3 (+) - 2 (-)	

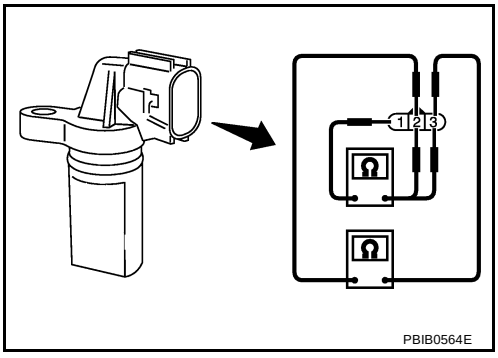

Removal and Installation

ABS007YX

CAMSHAFT POSITION SENSOR (PHASE)

Refer to EM-212, "CAMSHAFT" .

DTC P0420, P0430 THREE WAY CATALYST FUNCTION

PFP:20905

On Board Diagnosis Logic

ABS00E5B

The ECM monitors the switching frequency ratio of heated oxygen sensors 1 and 2.
A three way catalyst (Manifold) with high oxygen storage capacity will indicate a low switching frequency of heated oxygen sensor 2. As oxygen storage capacity decreases, the heated oxygen sensor 2 switching frequency will increase.
When the frequency ratio of heated oxygen sensors 1 and 2 approaches a specified limit value, the three way catalyst (Manifold) malfunction is diagnosed.

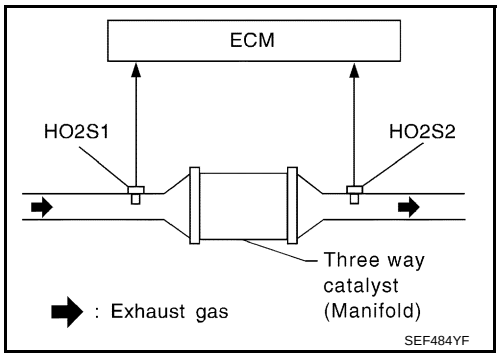

DTC No.	Trouble diagnosis name	DTC detecting condition	Possible cause
P0420 0420 (Bank 1)	Catalyst system efficiency below threshold	● Three way catalyst (Manifold) does not operate properly. ● Three way catalyst (Manifold) does not have enough oxygen storage capacity.	● Three way catalyst (Manifold) ● Exhaust tube ● Intake air leaks ● Fuel injector ● Fuel injector leaks ● Spark plug ● Improper ignition timing
P0430 0430 (Bank 2)			

DTC Confirmation Procedure

ABS00E5C

NOTE:
If DTC Confirmation Procedure has been previously conducted, always turn ignition switch OFF and wait at least 10 seconds before conducting the next test.

WITH CONSULT-II

TESTING CONDITION:
Do not hold engine speed for more than the specified minutes below.

1. Turn ignition switch ON and select “DATA MONITOR” mode with CONSULT-II.
2. Start engine and warm it up to the normal operating temperature.
3. Turn ignition switch OFF and wait at least 10 seconds.
4. Start engine and keep the engine speed between 3,500 and 4,000 rpm for at least 1 minute under no load.
5. Let engine idle for 1 minute.
6. Make sure that “COOLAN TEMP/S” indicates more than 70°C (158°F).
   If not, warm up engine and go to next step when “COOLAN TEMP/S” indication reaches to 70°C (158°F).
7. Open engine hood.

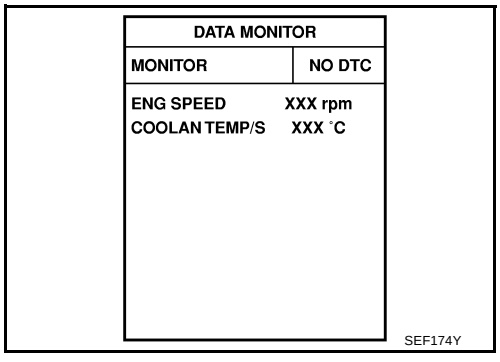

8. Select “DTC & SRT CONFIRMATION” then “SRT WORK SUPPORT” mode with CONSULT-II.
9. Rev engine up to 2,000 to 3,000 rpm and hold it for 3 consecutive minutes then release the accelerator pedal completely.
   If “INCMP” of “CATALYST” changed to “CMPLT”, go to step 12.
10. Wait 5 seconds at idle.

SRT WORK SUPPORT	
CATALYST	INCMP
EVAP SYSTEM	INCMP
HO2S HTR	CMPLT
HO2S	INCMP
MONITOR	
ENG SPEED	XXX rpm
MAS A/F SE-B1	XXX V
B/FUEL SCHDL	XXX msec
A/F ALPHA-B1	XXX V
COOLAN TEMP/S	XX ˚C
HO2S1 (B1)	XXX V

SEF940Z

11. Rev engine up to 2,000 to 3,000 rpm and maintain it until “INCMP” of “CATALYST” changes to “CMPLT” (It will take approximately 5 minutes).
    If not “CMPLT”, stop engine and cool it down to less than 70°C (158°F) and then retest from step 1.

SRT WORK SUPPORT	
CATALYST	CMPLT
EVAP SYSTEM	INCMP
HO2S HTR	CMPLT
HO2S	INCMP
MONITOR	
ENG SPEED	XXX rpm
MAS A/F SE-B1	XXX V
B/FUEL SCHDL	XXX msec
A/F ALPHA-B1	XXX V
COOLAN TEMP/S	XX ˚C
HO2S1 (B1)	XXX V

SEF941Z

12. Select “SELF-DIAG RESULTS” mode with CONSULT-II.
13. Confirm that the 1st trip DTC is not detected.
    If the 1st trip DTC is detected, go to EC-1052, "Diagnostic Procedure" .

SELF DIAG RESULTS	
DTC RESULTS	TIME
NO DTC IS DETECTED. FURTHER TESTING MAY BE REQUIRED.	

SEF535Z

Overall Function Check

ABS00E5D

Use this procedure to check the overall function of the three way catalyst 1. During this check, a 1st trip DTC might not be confirmed.

CAUTION:
Always drive vehicle at a safe speed.

WITH GST

1. Start engine and warm it up to the normal operating temperature.
2. Turn ignition switch OFF and wait at least 10 seconds.
3. Start engine and keep the engine speed between 3,500 and 4,000 rpm for 1 minute under no load.
4. Let engine idle for 1 minute.
5. Set voltmeters probes between ECM terminals 16 [HO2S1 (bank 1) signal], 35 [HO2S1 (bank 2) signal] and ground, and ECM terminals 55 [HO2S2 (bank 1) signal], 74 [HO2S2 (bank 2) signal] and ground.
6. Keep engine speed at 2,000 rpm constant under no load.

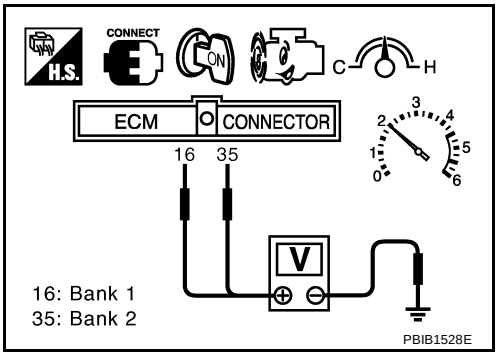

7. Make sure that the voltage switching frequency (high & low) between ECM terminals 55 and ground, or 74 and ground is very less than that of ECM terminals 16 and ground, or 35 and ground.
   Switching frequency ratio = A/B
   A: Heated oxygen sensor 2 voltage switching frequency
   B: Heated oxygen sensor 1 voltage switching frequency
   This ratio should be less than 0.75.
   If the ratio is greater than above, it means three way catalyst does not operate properly. Go to EC-1052, "Diagnostic Procedure" .

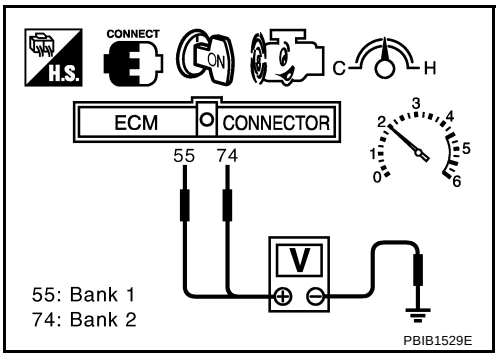

NOTE:
If the voltage at terminal 16 or 35 does not switch periodically more than 5 times within 10 seconds at step 5, perform trouble diagnosis for “DTC P0133, P0153” first. (See EC-944 .)

Diagnostic Procedure

ABS00E5E

1. CHECK EXHAUST SYSTEM

Visually check exhaust tubes and muffler for dent.

OK or NG

OK >> GO TO 2.
NG >> Repair or replace.

2. CHECK EXHAUST GAS LEAK

1. Start engine and run it at idle.
2. Listen for an exhaust gas leak before the three way catalyst (Manifold).

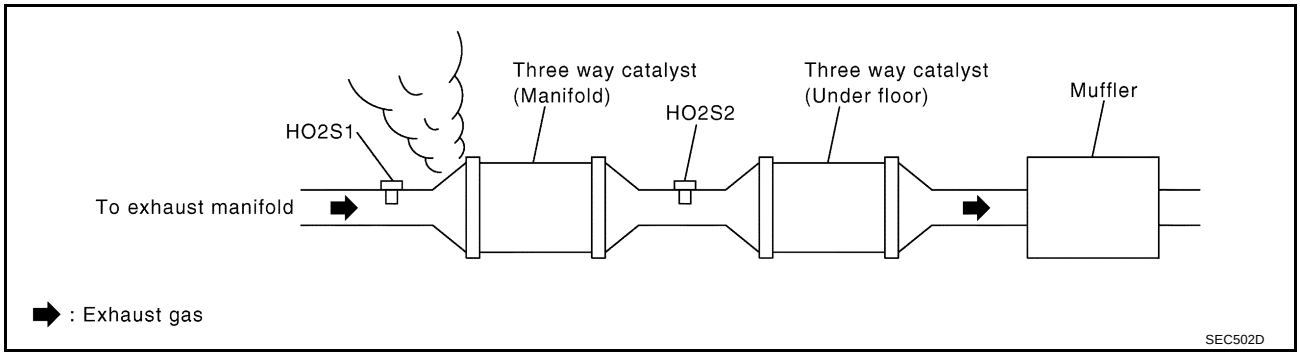

OK or NG

OK >> GO TO 3.
NG >> Repair or replace.

3. CHECK INTAKE AIR LEAK

Listen for an intake air leak after the mass air flow sensor.

OK or NG

OK >> GO TO 4.
NG >> Repair or replace.

4. CHECK IGNITION TIMING

Check the following items. Refer to EC-769, "Basic Inspection" .

Items	Specifications
Ignition timing	12° ± 5° BTDC (in P or N position)
Target idle speed	650 ± 50 rpm (in P or N position)

OK or NG

OK >> GO TO 5.
NG >> Follow the EC-769, "Basic Inspection" .

5. CHECK INJECTORS

1. Stop engine and then turn ignition switch ON.
2. Check voltage between ECM terminals 21, 22, 23, 40, 41, 42, 44, 63 and ground with CONSULT-II or tester.

   Voltage: Battery voltage

3. Refer to Wiring Diagram for Injectors, EC-1352 .

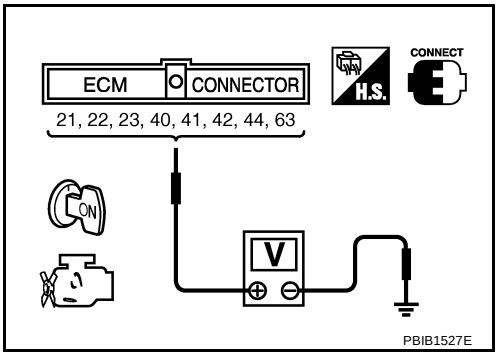

OK or NG

OK >> GO TO 6.
NG >> Perform EC-1353, "Diagnostic Procedure" .

6. CHECK FUNCTION OF IGNITION COIL-I

CAUTION:
Do the following procedure in the place where ventilation is good without the combustible.

1. Turn ignition switch OFF.
2. Remove fuel pump fuse in IPDM E/R to release fuel pressure.

   NOTE:
   Do not use CONSULT-II to release fuel pressure, or fuel pressure applies again during the following procedure.
3. Start engine.
4. After engine stalls, crank it two or three times to release all fuel pressure.
5. Turn ignition switch OFF.
6. Remove all ignition coil harness connectors to avoid the electrical discharge from the ignition coils.
7. Remove ignition coil and spark plug of the cylinder to be checked.

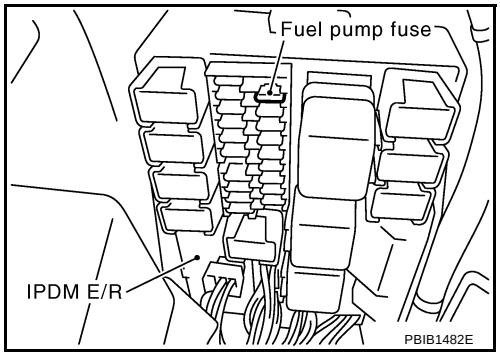

8. Crank engine for five seconds or more to remove combustion gas in the cylinder.
9. Connect spark plug and harness connector to ignition coil.
10. Fix ignition coil using a rope etc. with gap of 13 - 17 mm between the edge of the spark plug and grounded metal portion as shown in the figure.
11. Crank engine for about three seconds, and check whether spark is generated between the spark plug and the grounded metal portion.

    Spark should be generated.

    CAUTION:
    - **Do not approach to the spark plug and the ignition coil within 50cm. Be careful not to get an electrical shock while checking, because the electrical discharge voltage becomes 20kV or more.**
    - **It might cause to damage the ignition coil if the gap of 17 mm or more is taken.**

    NOTE:
    When the gap is 13 mm or less, the spark might be generated even if the coil is malfunctioning.

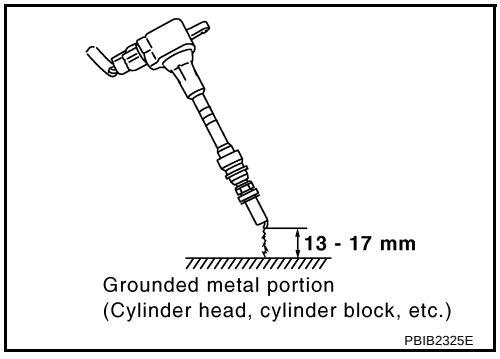

OK or NG

OK >> GO TO 10.
NG >> GO TO 7.

7. CHECK FUNCTION OF IGNITION COIL-II

1. Turn ignition switch OFF.
2. Disconnect spark plug and connect a known-good spark plug.
3. Crank engine for about three seconds, and recheck whether spark is generated between the spark plug and the grounded metal portion.

   Spark should be generated.

OK or NG

OK >> GO TO 8.
NG >> Check ignition coil, power transistor and their circuits. Refer to EC-1339 .

8. CHECK SPARK PLUG

Check the initial spark plug for fouling, etc.

OK or NG

OK >> Replace spark plug(s) with standard type one(s). For spark plug type, refer to EM-190 .

NG >> 1. Repair or clean spark plug.
2. GO TO 9.

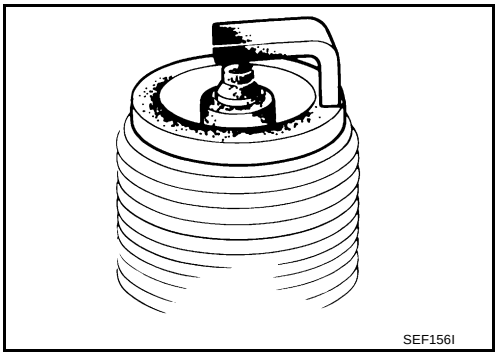

9. CHECK FUNCTION OF IGNITION COIL-III

1. Reconnect the initial spark plugs.
2. Crank engine for about three seconds, and recheck whether spark is generated between the spark plug and the grounded portion.

Spark should be generated.

OK or NG

OK >> **INSPECTION END**

NG >> Replace spark plug(s) with standard type one(s). For spark plug type, refer to EM-190 .

10. CHECK INJECTOR

1. Turn ignition switch OFF.
2. Remove injector assembly.
   Refer to EM-192, "FUEL INJECTOR AND FUEL TUBE" .
   Keep fuel hose and all injectors connected to injector gallery.
3. Reconnect all injector harness connectors disconnected.
4. Disconnect all ignition coil harness connectors.
5. Turn ignition switch ON.
   Make sure fuel does not drip from injector.

OK or NG

OK (Does not drip.)>>GO TO 11.

NG (Drips.)>>Replace the injector(s) from which fuel is dripping.

11. CHECK INTERMITTENT INCIDENT

Refer to EC-854, "TROUBLE DIAGNOSIS FOR INTERMITTENT INCIDENT" .

Trouble is fixed.>>**INSPECTION END**

Trouble is not fixed.>>Replace three way catalyst assembly.

DTC P0441 EVAP CONTROL SYSTEM

PFP:14950

System Description

ABS007NQ

NOTE:
If DTC P0441 is displayed with other DTC such as P2122, P2123, P2127, P2128 or P2138, first perform trouble diagnosis for other DTC.

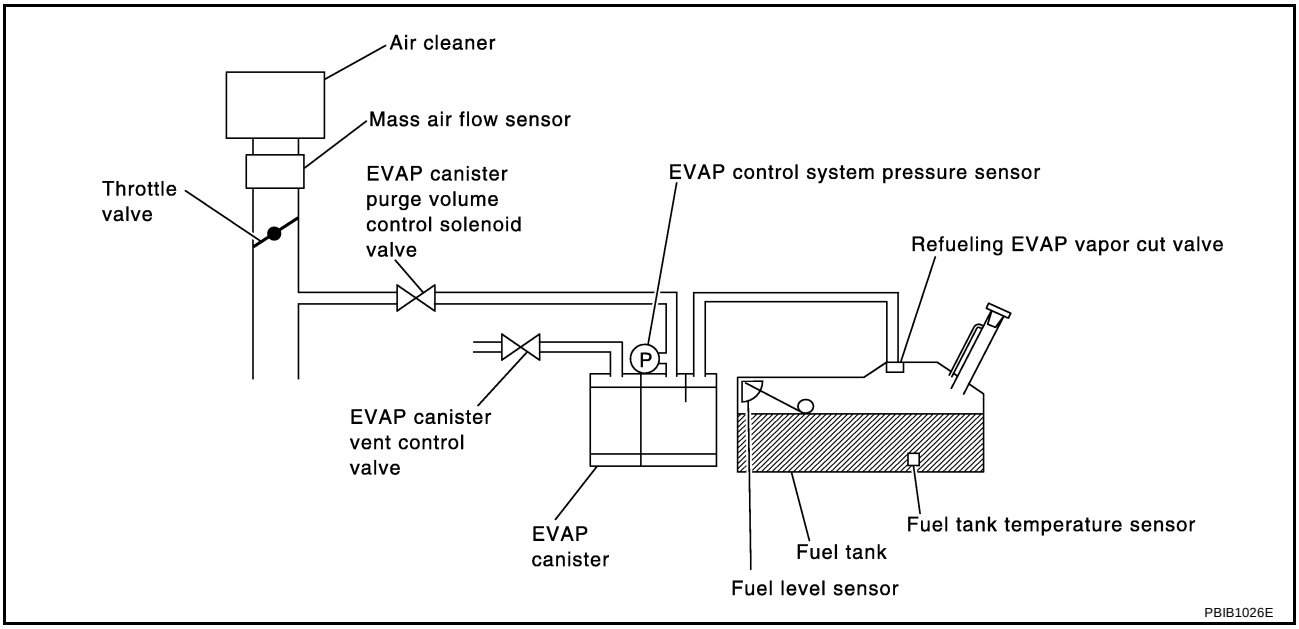

In this evaporative emission (EVAP) control system, purge flow occurs during non-closed throttle conditions. Purge volume is related to air intake volume. Under normal purge conditions (non-closed throttle), the EVAP canister purge volume control solenoid valve is open to admit purge flow. Purge flow exposes the EVAP control system pressure sensor to intake manifold vacuum.

On Board Diagnosis Logic

ABS007NR

Under normal conditions (non-closed throttle), sensor output voltage indicates if pressure drop and purge flow are adequate. If not, a malfunction is determined.

DTC No.	Trouble diagnosis name	DTC detecting condition	Possible cause
P0441 0441	EVAP control system incorrect purge flow	EVAP control system does not operate properly, EVAP control system has a leak between intake manifold and EVAP control system pressure sensor.	● EVAP canister purge volume control solenoid valve stuck closed ● EVAP control system pressure sensor and the circuit ● Loose, disconnected or improper connection of rubber tube ● Blocked rubber tube ● Cracked EVAP canister ● EVAP canister purge volume control solenoid valve circuit ● Accelerator pedal position sensor ● Blocked purge port ● EVAP canister vent control valve

DTC Confirmation Procedure

ABS007NS

CAUTION:
Always drive vehicle at a safe speed.

NOTE:
If DTC Confirmation Procedure has been previously conducted, always turn ignition switch OFF and wait at least 10 seconds before conducting the next test.

TESTING CONDITION:
Always perform test at a temperature of 5°C (41°F) or more.

WITH CONSULT-II

1. Start engine and warm it up to normal operating temperature.
2. Turn ignition switch OFF and wait at least 10 seconds.
3. Start engine and let it idle for at least 70 seconds.
4. Select “PURG FLOW P0441” of “EVAPORATIVE SYSTEM” in “DTC CONFIRMATION” mode with CONSULT-II.
5. Touch “START”.
   If “COMPLETED” is displayed, go to step 7.
6. When the following conditions are met, “TESTING” will be displayed on the CONSULT-II screen. Maintain the conditions continuously until “TESTING” changes to “COMPLETED”. (It will take at least 35 seconds.)

Selector lever	Suitable position
Vehicle speed	32 - 120 km/h (20 - 75 MPH)
ENG SPEED	500 - 3,000 rpm
B/FUEL SCHDL	1.0 - 10.0 msec
Engine coolant temperature	70 - 100°C (158 - 212°F)

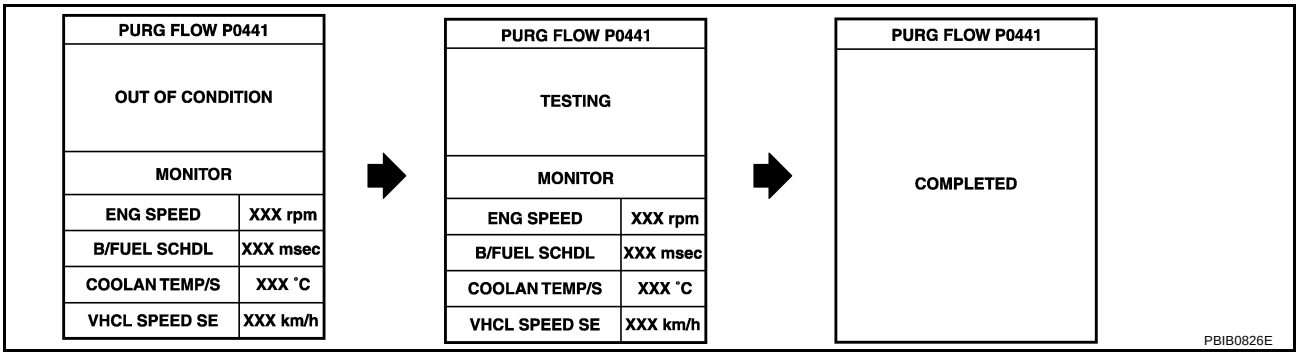

If “TESTING” is not changed for a long time, retry from step 2.

7. Make sure that “OK” is displayed after touching “SELF-DIAG RESULTS”. If “NG” is displayed, refer to EC-1058, "Diagnostic Procedure" .

Overall Function Check

ABS007NT

Use this procedure to check the overall monitoring function of the EVAP control system purge flow monitoring. During this check, a 1st trip DTC might not be confirmed.

WITH GST

1. Lift up drive wheels.
2. Start engine (VDC switch OFF) and warm it up to normal operating temperature.
3. Turn ignition switch OFF, wait at least 10 seconds.
4. Start engine and wait at least 70 seconds.
5. Set voltmeter probes to ECM terminals 32 (EVAP control system pressure sensor signal) and ground.
6. Check EVAP control system pressure sensor value at idle speed and note it.
7. Establish and maintain the following conditions for at least 1 minute.

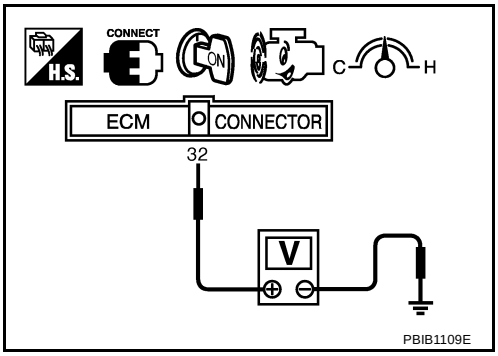

Air conditioner switch	ON
Headlamp switch	ON
Rear window defogger switch	ON
Engine speed	Approx. 3,000 rpm
Gear position	Any position other than P, N or R

8. Verify that EVAP control system pressure sensor value stays 0.1V less than the value at idle speed (measured at step 6) for at least 1 second.

9. If NG, go to EC-1058, "Diagnostic Procedure" .

Diagnostic Procedure

ABS007NU

1. CHECK EVAP CANISTER

1. Turn ignition switch OFF.
2. Check EVAP canister for cracks.

OK or NG

OK (With CONSULT-II)>>GO TO 2.
OK (Without CONSULT-II)>>GO TO 3.
NG >> Replace EVAP canister.

2. CHECK PURGE FLOW

With CONSULT-II

1. Disconnect vacuum hose connected to EVAP canister purge volume control solenoid valve at EVAP service port and install vacuum gauge. For the location of EVAP service port, refer to EC-731, "EVAPORATIVE EMISSION LINE DRAWING" .
2. Start engine and let it idle.
3. Select “PURG VOL CONT/V” in “ACTIVE TEST” mode with CONSULT-II.
4. Rev engine up to 2,000 rpm.
5. Touch “Qd” and “Qu” on CONSULT-II screen to adjust “PURG VOL CONT/V” opening and check vacuum existence.

PURG VOL CONT/V	Vacuum
100%	Should exist.
0%	Should not exist.

ACTIVE TEST	
PURG VOL CONT/V	0 %
MONITOR	
ENG SPEED	XXX rpm
HO2S1 MNTR (B1)	LEAN
HO2S1 MNTR (B2)	LEAN
A/F ALPHA-B1	XXX %
A/F ALPHA-B2	XXX %

PBIB0147E

OK or NG

OK >> GO TO 7.
NG >> GO TO 4.

3. CHECK PURGE FLOW

Without CONSULT-II

1. Start engine and warm it up to normal operating temperature.
2. Stop engine.
3. Disconnect vacuum hose connected to EVAP canister purge volume control solenoid valve at EVAP service port and install vacuum gauge. For the location of EVAP service port, refer to EC-731, "EVAPORATIVE EMISSION LINE DRAWING" .
4. Start engine and let it idle for at least 80 seconds.
5. Check vacuum gauge indication when revving engine up to 2,000 rpm.

   Vacuum should exist.

6. Release the accelerator pedal fully and let idle.

   Vacuum should not exist.

OK or NG

OK >> GO TO 7.
NG >> GO TO 4.

4. CHECK EVAP PURGE LINE

1. Turn ignition switch OFF.
2. Check EVAP purge line for improper connection or disconnection.
   Refer to EC-731, "EVAPORATIVE EMISSION LINE DRAWING" .

OK or NG

OK >> GO TO 5.
NG >> Repair it.

5. CHECK EVAP PURGE HOSE AND PURGE PORT

1. Disconnect purge hoses connected to EVAP service port **A** and EVAP canister purge volume control solenoid valve **B** .
2. Blow air into each hose and EVAP purge port **C** .

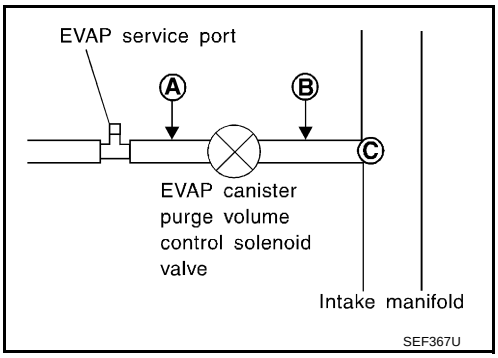

3. Check that air flows freely.

OK or NG

OK (With CONSULT-II)>>GO TO 6.
OK (Without CONSULT-II)>>GO TO 7.
NG >> Repair or clean hoses and/or purge port.

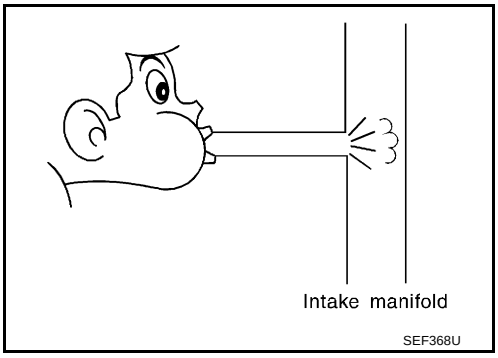

6. CHECK EVAP CANISTER PURGE VOLUME CONTROL SOLENOID VALVE

With CONSULT-II

1. Start engine.
2. Perform “PURG VOL CONT/V” in “ACTIVE TEST” mode with CONSULT-II. Check that engine speed varies according to the valve opening.

OK or NG

OK >> GO TO 8.
NG >> GO TO 7.

ACTIVE TEST	
PURG VOL CONT/V	0 %
MONITOR	
ENG SPEED	XXX rpm
HO2S1 MNTR (B1)	LEAN
HO2S1 MNTR (B2)	LEAN
A/F ALPHA-B1	XXX %
A/F ALPHA-B2	XXX %

PBIB0147E

7. CHECK EVAP CANISTER PURGE VOLUME CONTROL SOLENOID VALVE

Refer to EC-1074, "Component Inspection" .

OK or NG

OK >> GO TO 8.
NG >> Replace EVAP canister purge volume control solenoid valve.

8. CHECK EVAP CONTROL SYSTEM PRESSURE SENSOR CONNECTOR

1. Disconnect EVAP control system pressure sensor harness connector.
2. Check connectors for water.

Water should not exist.

OK or NG

OK >> GO TO 9.
NG >> Replace EVAP control system pressure sensor.

9. CHECK EVAP CONTROL SYSTEM PRESSURE SENSOR FUNCTION

Refer to DTC P0452 EC-1087, "DTC Confirmation Procedure" , P0453 EC-1093, "DTC Confirmation Procedure" .

OK or NG

OK >> GO TO 10.
NG >> Replace EVAP control system pressure sensor.

10. CHECK RUBBER TUBE FOR CLOGGING

1. Disconnect rubber tube connected to EVAP canister vent control valve.
2. Check the rubber tube for clogging.

OK or NG

OK >> GO TO 11.
NG >> Clean the rubber tube using an air blower.

11. CHECK EVAP CANISTER VENT CONTROL VALVE

Refer to EC-1081, "Component Inspection" .

OK or NG

OK >> GO TO 12.
NG >> Replace EVAP canister vent control valve.

12. CHECK EVAP PURGE LINE

Inspect EVAP purge line (pipe and rubber tube). Check for evidence of leaks.
Refer to EC-731, "EVAPORATIVE EMISSION LINE DRAWING" .

OK or NG

OK >> GO TO 13.
NG >> Replace it.

13. CLEAN EVAP PURGE LINE

Clean EVAP purge line (pipe and rubber tube) using air blower.

>> GO TO 14.

14. CHECK INTERMITTENT INCIDENT

Refer to EC-854, "TROUBLE DIAGNOSIS FOR INTERMITTENT INCIDENT" .

>> **INSPECTION END**

DTC P0442 EVAP CONTROL SYSTEM

PFP:14950

On Board Diagnosis Logic

ABS007NV

This diagnosis detects leaks in the EVAP purge line using engine intake manifold vacuum.
If pressure does not increase, the ECM will check for leaks in the line between the fuel tank and EVAP canister purge volume control solenoid valve, under the following “Vacuum test” conditions.
The EVAP canister vent control valve is closed to shut the EVAP purge line off. The EVAP canister purge volume control solenoid valve will then be opened to depressurize the EVAP purge line using intake manifold vacuum. After this occurs, the EVAP canister purge volume control solenoid valve will be closed.

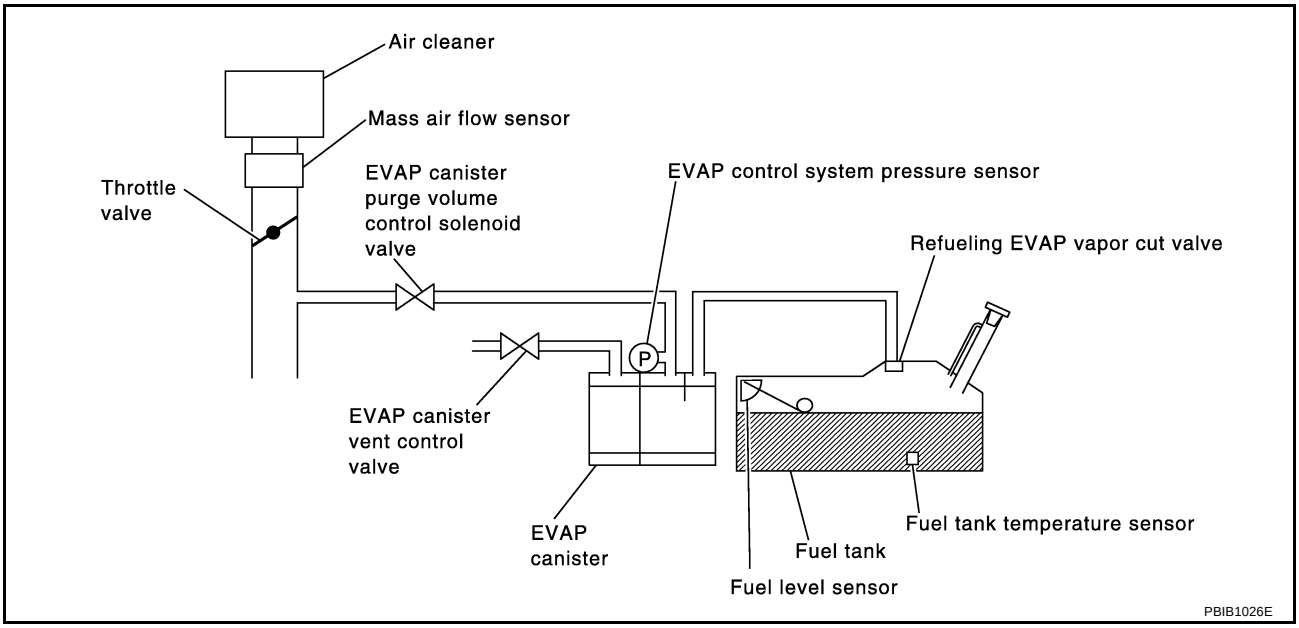

DTC No.	Trouble diagnosis name	DTC detecting condition	Possible cause
P0442 0442	EVAP control system small leak detected (negative pressure)	EVAP control system has a leak, EVAP control system does not operate properly.	● Incorrect fuel tank vacuum relief valve ● Incorrect fuel filler cap used ● Fuel filler cap remains open or fails to close. ● Foreign matter caught in fuel filler cap. ● Leak is in line between intake manifold and EVAP canister purge volume control solenoid valve. ● Foreign matter caught in EVAP canister vent control valve. ● EVAP canister or fuel tank leaks ● EVAP purge line (pipe and rubber tube) leaks ● EVAP purge line rubber tube bent ● Loose or disconnected rubber tube ● EVAP canister vent control valve and the circuit ● EVAP canister purge volume control solenoid valve and the circuit ● Fuel tank temperature sensor ● O-ring of EVAP canister vent control valve is missing or damaged ● EVAP canister is saturated with water ● EVAP control system pressure sensor ● Fuel level sensor and the circuit ● Refueling EVAP vapor cut valve ● ORVR system leaks

CAUTION:

- **Use only a genuine NISSAN fuel filler cap as a replacement. If an incorrect fuel filler cap is used, the MIL may come on.**
- **If the fuel filler cap is not tightened properly, the MIL may come on.**
- **Use only a genuine NISSAN rubber tube as a replacement.**

DTC Confirmation Procedure

ABS007NW

NOTE:

- If DTC Confirmation Procedure has been previously conducted, always turn ignition switch OFF and wait at least 10 seconds before conducting the next test.

TESTING CONDITION:

- **Perform "DTC WORK SUPPORT" when the fuel level is between 1/4 and 3/4 full, and vehicle is placed on flat level surface.**
- **Always perform test at a temperature of 0 to 30°C (32 to 86°F).**

WITH CONSULT-II

1. Turn ignition switch ON.
2. Turn ignition switch OFF and wait at least 10 seconds.
3. Turn ignition switch ON and select "DATA MONITOR" mode with CONSULT-II.
4. Make sure that the following conditions are met.
   COOLAN TEMP/S: 0 - 70°C (32 - 158°F)
   INT/A TEMP SE: 0 - 30°C (32 - 86°F)
5. Select "EVAP SML LEAK P0442/P1442" of "EVAPORATIVE SYSTEM" in "DTC WORK SUPPORT" mode with CONSULT-II.
   Follow the instruction displayed.

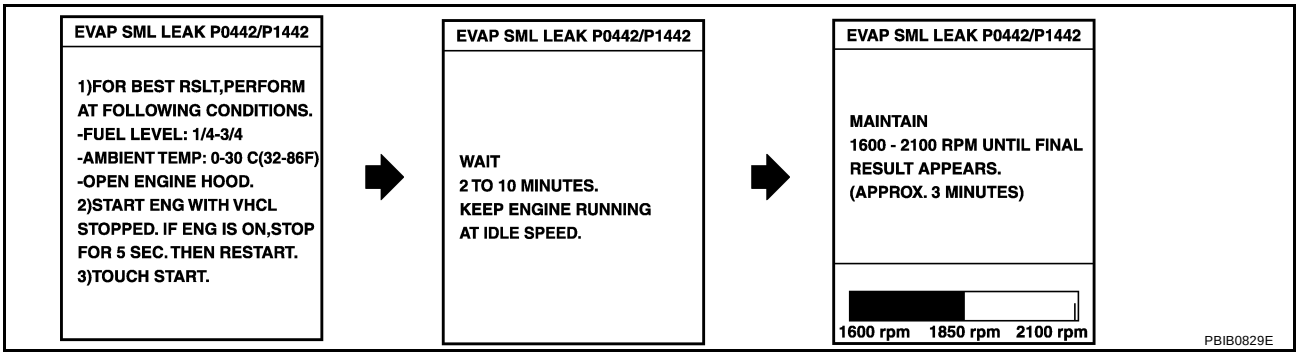

NOTE:
If the engine speed cannot be maintained within the range displayed on the CONSULT-II screen, go to EC-769, "Basic Inspection" .

6. Make sure that "OK" is displayed.
   If "NG" is displayed, refer to EC-1063, "Diagnostic Procedure" .

   NOTE:
   Make sure that EVAP hoses are connected to EVAP canister purge volume control solenoid valve properly.

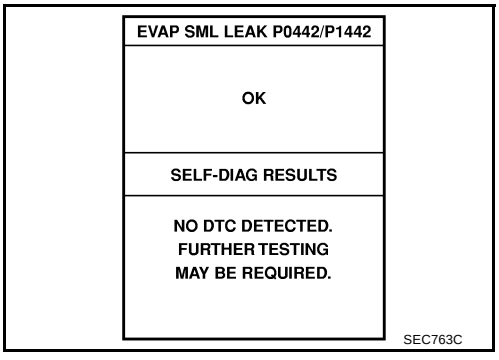

WITH GST

NOTE:
Be sure to read the explanation of EC-756, "Driving Pattern" before driving vehicle.

1. Start engine.
2. Drive vehicle according to EC-756, "Driving Pattern" .
3. Stop vehicle.
4. Turn ignition switch OFF, wait at least 10 seconds and then turn ON.
5. Select “Service $07” with GST.
   - If P0442 is displayed on the screen, go to EC-1063, "Diagnostic Procedure" .
   - If P0441 is displayed on the screen, go to EC-1058, "Diagnostic Procedure" .

Diagnostic Procedure

ABS007NX

1. CHECK FUEL FILLER CAP DESIGN

1. Turn ignition switch OFF.
2. Check for genuine NISSAN fuel filler cap design.

OK or NG

OK >> GO TO 2.
NG >> Replace with genuine NISSAN fuel filler cap.

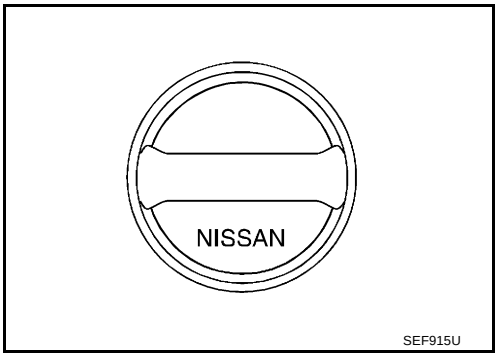

2. CHECK FUEL FILLER CAP INSTALLATION

Check that the cap is tightened properly by rotating the cap clockwise.

OK or NG

OK >> GO TO 3.
NG >> 1. Open fuel filler cap, then clean cap and fuel filler neck threads using air blower.
2. Retighten until ratcheting sound is heard.

3. CHECK FUEL FILLER CAP FUNCTION

Check for air releasing sound while opening the fuel filler cap.

OK or NG

OK >> GO TO 5.
NG >> GO TO 4.

4. CHECK FUEL TANK VACUUM RELIEF VALVE

Refer to EC-733, "FUEL TANK VACUUM RELIEF VALVE (BUILT INTO FUEL FULLER CAP)" .

OK or NG

OK >> GO TO 5.
NG >> Replace fuel filler cap with a genuine one.

5. INSTALL THE PRESSURE PUMP

To locate the EVAP leak, install EVAP service port adapter and pressure pump to EVAP service port securely.

NOTE:
Improper installation of the EVAP service port adapter to the EVAP service port may cause leaking.

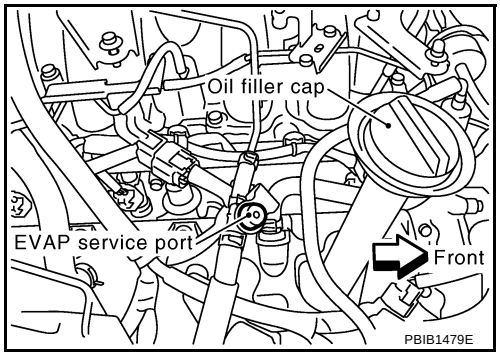

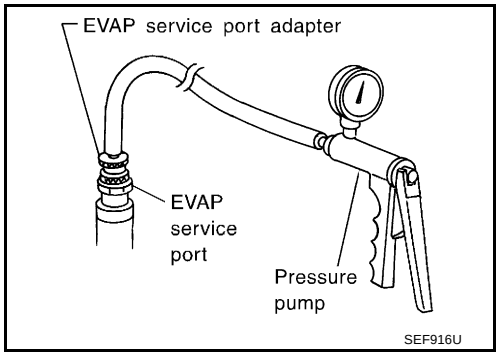

With CONSULT-II>>GO TO 6.
Without CONSULT-II>>GO TO 7.

6. CHECK FOR EVAP LEAK

With CONSULT-II

1. Turn ignition switch ON.
2. Select “EVAP SYSTEM CLOSE” of “WORK SUPPORT” mode with CONSULT-II.
3. Touch “START” and apply pressure into the EVAP line until the pressure indicator reaches the middle of the bar graph.

   NOTE:
   - **Never use compressed air or a high pressure pump.**
   - **Do not exceed 4.12 kPa (0.042 kg/cm^2 , 0.6 psi) of pressure in the system.**

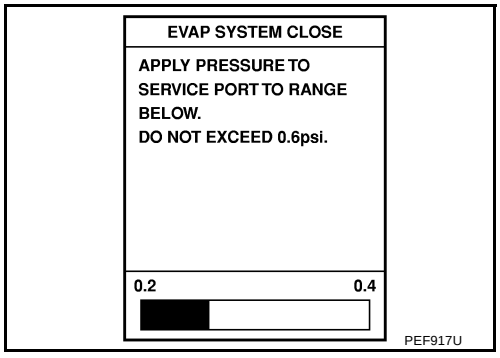

4. Using EVAP leak detector, locate the EVAP leak. For the leak detector, refer to the instruction manual for more details.
   Refer to EC-731, "EVAPORATIVE EMISSION LINE DRAWING"
   .

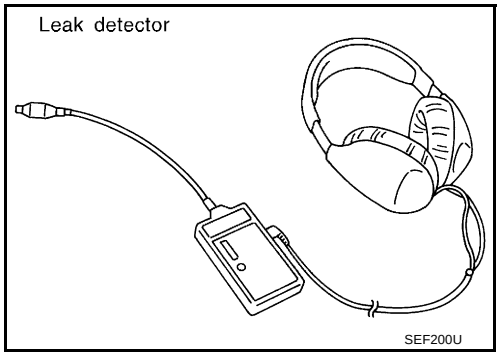

OK or NG

OK >> GO TO 8.
NG >> Repair or replace.

7. CHECK FOR EVAP LEAK

Without CONSULT-II

1. Turn ignition switch OFF.
2. Apply 12 volts DC to EVAP canister vent control valve. The valve will close. (Continue to apply 12 volts until the end of test.)

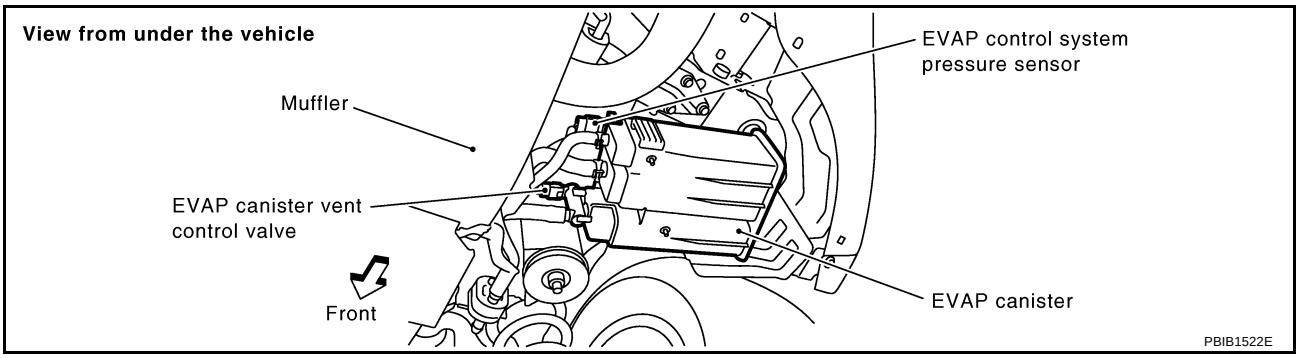

3. Pressurize the EVAP line using pressure pump with 1.3 to 2.7 kPa (10 to 20 mmHg, 0.39 to 0.79 inHg), then remove pump and EVAP service port adapter.

   NOTE:
   - **Never use compressed air or a high pressure pump.**
   - **Do not exceed 4.12 kPa (0.042 kg/cm^2 , 0.6 psi) of pressure in the system.**
4. Using EVAP leak detector, locate the EVAP leak. For the leak detector, refer to the instruction manual for more details. Refer to EC-731, "EVAPORATIVE EMISSION LINE DRAWING" .

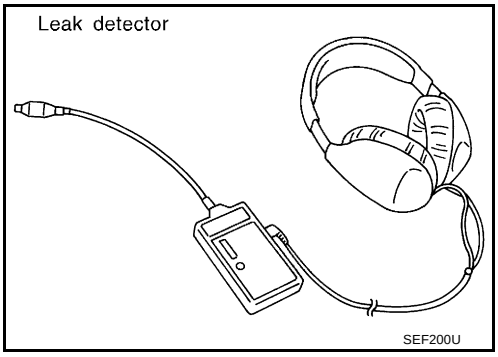

OK or NG

OK >> GO TO 8.
NG >> Repair or replace.

8. CHECK EVAP CANISTER VENT CONTROL VALVE

Check the following.

- EVAP canister vent control valve is installed properly.
  Refer to EC-734, "Removal and Installation" .
- EVAP canister vent control valve.
  Refer to EC-1081, "Component Inspection" .

OK or NG

OK >> GO TO 9.
NG >> Repair or replace EVAP canister vent control valve and O-ring.

9. CHECK IF EVAP CANISTER SATURATED WITH WATER

1. Remove EVAP canister with EVAP canister vent control valve and EVAP control system pressure sensor attached.
2. Does water drain from the EVAP canister?

Yes or No

Yes >> GO TO 10.
No (With CONSULT-II)>>GO TO 12.
No (Without CONSULT-II)>>GO TO 13.

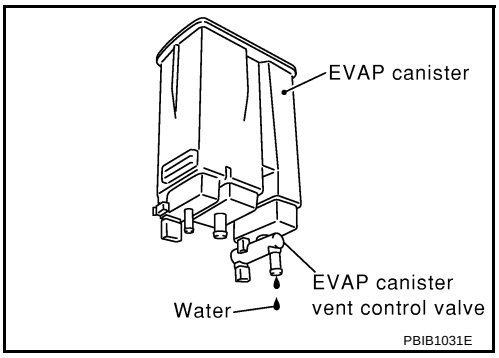

10. CHECK EVAP CANISTER

Weigh the EVAP canister with the EVAP canister vent control valve and EVAP control system pressure sensor attached.

The weight should be less than 2.1 kg (4.6 lb).

OK or NG

OK (With CONSULT-II)>>GO TO 12.
OK (Without CONSULT-II)>>GO TO 13.
NG >> GO TO 11.

11. DETECT MALFUNCTIONING PART

Check the following.

- EVAP canister for damage
- EVAP hose between EVAP canister and vehicle frame for clogging or poor connection

>> Repair hose or replace EVAP canister.

12. CHECK EVAP CANISTER PURGE VOLUME CONTROL SOLENOID VALVE OPERATION

With CONSULT-II

1. Disconnect vacuum hose to EVAP canister purge volume control solenoid valve at EVAP service port.
2. Start engine.
3. Perform “PURG VOL CONT/V” in “ACTIVE TEST” mode.
4. Touch “Qu” on CONSULT-II screen to increase “PURG VOL CONT/V” opening to 100%.
5. Check vacuum hose for vacuum when revving engine up to 2,000 rpm.

OK or NG

OK >> GO TO 15.
NG >> GO TO 14.

ACTIVE TEST	
PURG VOL CONT/V	0 %
MONITOR	
ENG SPEED	XXX rpm
HO2S1 MNTR (B1)	LEAN
HO2S1 MNTR (B2)	LEAN
A/F ALPHA-B1	XXX %
A/F ALPHA-B2	XXX %

PBIB0147E

13. CHECK EVAP CANISTER PURGE VOLUME CONTROL SOLENOID VALVE OPERATION

Without CONSULT-II

1. Start engine and warm it up to normal operating temperature.
2. Stop engine.
3. Disconnect vacuum hose to EVAP canister purge volume control solenoid valve at EVAP service port.
4. Start engine and let it idle for at least 80 seconds.
5. Check vacuum hose for vacuum when revving engine up to 2,000 rpm.

Vacuum should exist.

OK or NG

OK >> GO TO 16.
NG >> GO TO 14.

14. CHECK VACUUM HOSE

Check vacuum hoses for clogging or disconnection. Refer to EC-810, "Vacuum Hose Drawing" .

OK or NG

OK >> GO TO 15.
NG >> Repair or reconnect the hose.

15. CHECK EVAP CANISTER PURGE VOLUME CONTROL SOLENOID VALVE

Refer to EC-1074, "Component Inspection" .

OK or NG

OK >> GO TO 16.
NG >> Replace EVAP canister purge volume control solenoid valve.

16. CHECK FUEL TANK TEMPERATURE SENSOR

Refer to EC-1009, "Component Inspection" .

OK or NG

OK >> GO TO 17.
NG >> Replace fuel level sensor unit.

17. CHECK EVAP CONTROL SYSTEM PRESSURE SENSOR

Refer to EC-1091, "Component Inspection" .

OK or NG

OK >> GO TO 18.
NG >> Replace EVAP control system pressure sensor.

18. CHECK EVAP PURGE LINE

Check EVAP purge line (pipe, rubber tube, fuel tank and EVAP canister) for cracks or improper connection.
Refer to EC-731, "EVAPORATIVE EMISSION LINE DRAWING" .

OK or NG

OK >> GO TO 19.
NG >> Repair or reconnect the hose.

19. CLEAN EVAP PURGE LINE

Clean EVAP purge line (pipe and rubber tube) using air blower.

>> GO TO 20.

20. CHECK EVAP/ORVR LINE

Check EVAP/ORVR line between EVAP canister and fuel tank for clogging, kink, looseness and improper connection. For location, refer to EC-737, "ON BOARD REFUELING VAPOR RECOVERY (ORVR)" .

OK or NG

OK >> GO TO 21.
NG >> Repair or replace hoses and tubes.

21. CHECK RECIRCULATION LINE

Check recirculation line between filler neck tube and fuel tank for clogging, kink, cracks, looseness and improper connection.

OK or NG

OK >> GO TO 22.
NG >> Repair or replace hose, tube or filler neck tube.

22. CHECK REFUELING EVAP VAPOR CUT VALVE

Refer to EC-740, "REFUELING EVAP VAPOR CUT VALVE" .

OK or NG

OK >> GO TO 23.
NG >> Replace refueling EVAP vapor cut valve with fuel tank.

23. CHECK FUEL LEVEL SENSOR

Refer to DI-25, "CHECK FUEL LEVEL SENSOR UNIT" .

OK or NG

OK >> GO TO 24.
NG >> Replace fuel level sensor unit.

24. CHECK INTERMITTENT INCIDENT

Refer to EC-854, "TROUBLE DIAGNOSIS FOR INTERMITTENT INCIDENT" .

>> **INSPECTION END**

DTC P0444, P0445 EVAP CANISTER PURGE VOLUME CONTROL SOLENOID VALVE

PFP:14920

Description

ABS007NY

SYSTEM DESCRIPTION

Sensor	Input signal to ECM	ECM function	Actuator
Crankshaft position sensor (POS) Camshaft position sensor (PHASE)	Engine speed*1	EVAP canister purge flow control	EVAP canister purge volume control solenoid valve
Mass air flow sensor	Amount of intake air		
Engine coolant temperature sensor	Engine coolant temperature		
Battery	Battery voltage*1		
Throttle position sensor	Throttle position		
Accelerator pedal position sensor	Accelerator pedal position		
Heated oxygen sensor 1	Density of oxygen in exhaust gas (Mixture ratio feedback signal)		
Fuel tank temperature sensor	Fuel temperature in fuel tank		
Wheel sensor*2	Vehicle speed		

*1: ECM determines the start signal status by the signals of engine speed and battery voltage.
*2: This signal is sent to the ECM through CAN communication line.

This system controls flow rate of fuel vapor from the EVAP canister. The opening of the vapor by-pass passage in the EVAP canister purge volume control solenoid valve changes to control the flow rate. The EVAP canister purge volume control solenoid valve repeats ON/OFF operation according to the signal sent from the ECM. The opening of the valve varies for optimum engine control. The optimum value stored in the ECM is determined by considering various engine conditions. When the engine is operating, the flow rate of fuel vapor from the EVAP canister is regulated as the air flow changes.

COMPONENT DESCRIPTION

The EVAP canister purge volume control solenoid valve uses a ON/OFF duty to control the flow rate of fuel vapor from the EVAP canister. The EVAP canister purge volume control solenoid valve is moved by ON/OFF pulses from the ECM. The longer the ON pulse, the greater the amount of fuel vapor that will flow through the valve.

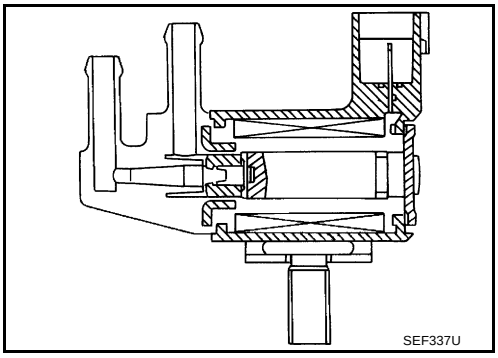

CONSULT-II Reference Value in Data Monitor Mode

ABS007NZ

Specification data are reference values.

MONITOR ITEM	CONDITION		SPECIFICATION
PURG VOL C/V	● Engine: After warming up ● Selector lever: P or N ● Air conditioner switch: OFF ● No load	Idle	0%
		2,000 rpm	—

On Board Diagnosis Logic

ABS007O0

DTC No.	Trouble diagnosis name	DTC detecting condition	Possible cause
P0444 0444	EVAP canister purge volume control solenoid valve circuit open	An excessively low voltage signal is sent to ECM through the valve	● Harness or connectors (The solenoid valve circuit is open or shorted.) ● EVAP canister purge volume control solenoid valve
P0445 0445	EVAP canister purge volume control solenoid valve circuit shorted	An excessively high voltage signal is sent to ECM through the valve	● Harness or connectors (The solenoid valve circuit is shorted.) ● EVAP canister purge volume control solenoid valve

DTC Confirmation Procedure

ABS007O1

NOTE:
If DTC Confirmation Procedure has been previously conducted, always turn ignition switch OFF and wait at least 10 seconds before conducting the next test.
TESTING CONDITION:
Before performing the following procedure, confirm battery voltage is more than 11V at idle.

WITH CONSULT-II

1. Turn ignition switch ON.
2. Select “DATA MONITOR” mode with CONSULT-II.
3. Start engine and let it idle for at least 13 seconds.
4. If 1st trip DTC is detected, go to EC-1073, "Diagnostic Procedure" .

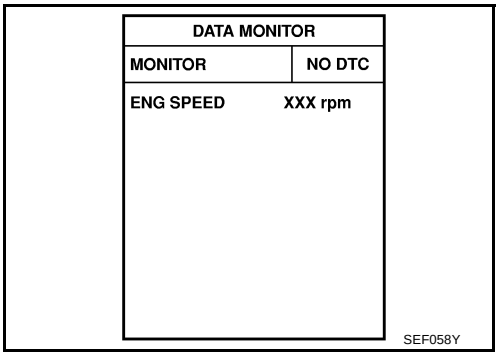

WITH GST

Follow the procedure “WITH CONSULT-II” above.

Wiring Diagram

ABS007O2

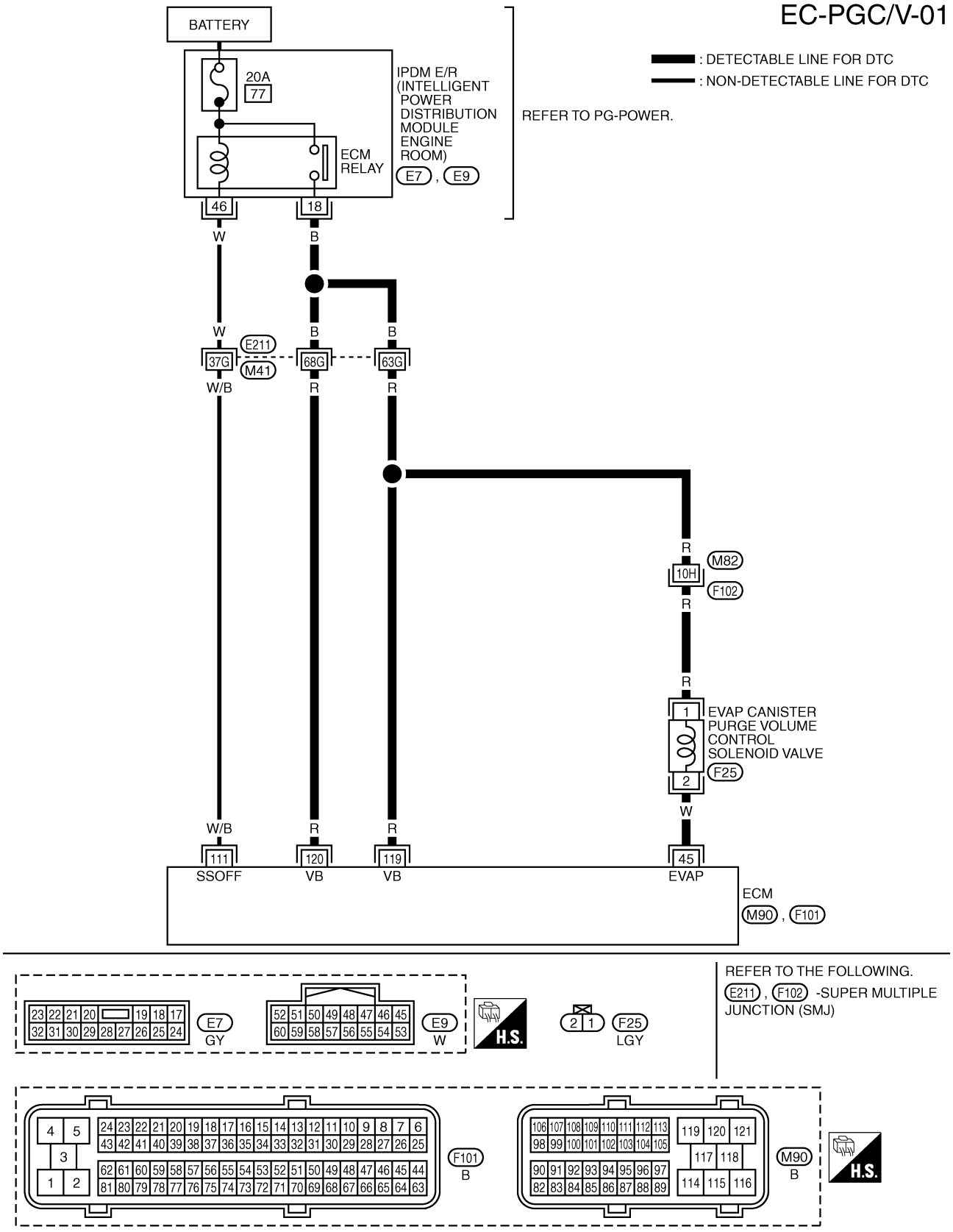

TBWM0414E

Specification data are reference values and are measured between each terminal and ground.
Pulse signal is measured by CONSULT-II.

CAUTION:

Do not use ECM ground terminals when measuring input/output voltage. Doing so may result in damage to the ECM's transistor. Use a ground other than ECM terminals, such as the ground.

TERMINAL NO.	WIRE COLOR	ITEM	CONDITION	DATA (DC Voltage)
45	W	EVAP canister purge volume control solenoid valve	**[Engine is running]** ● Idle speed	BATTERY VOLTAGE (11 - 14V)★ 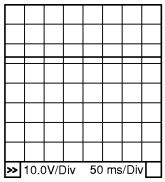 PBIB0050E
			[Engine is running] ● Engine speed: About 2,000 rpm (More than 100 seconds after starting engine)	11 - 14V★ 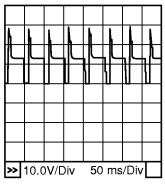 PBIB0051E
111	W/B	ECM relay (Self shut-off)	**[Engine is running]** **[Ignition switch: OFF]** ● For a few seconds after turning ignition switch OFF	0 - 1.5V
			[Ignition switch: OFF] ● More than a few seconds after turning ignition switch OFF	BATTERY VOLTAGE (11 - 14V)
119 120	R R	Power supply for ECM	**[Ignition switch: ON]**	BATTERY VOLTAGE (11 - 14V)

★: Average voltage for pulse signal (Actual pulse signal can be confirmed by oscilloscope.)

Diagnostic Procedure

ABS007O3

1. CHECK EVAP CANISTER PURGE VOLUME CONTROL SOLENOID VALVE POWER SUPPLY CIRCUIT

1. Turn ignition switch OFF.
2. Disconnect EVAP canister purge volume control solenoid valve harness connector.
3. Turn ignition switch ON.

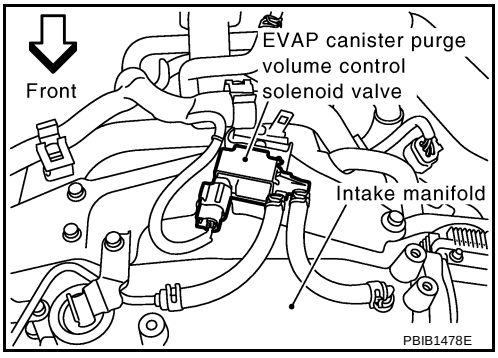

4. Check voltage between EVAP canister purge volume control solenoid valve terminal 1 and ground with CONSULT-II or tester.

Voltage: Battery voltage

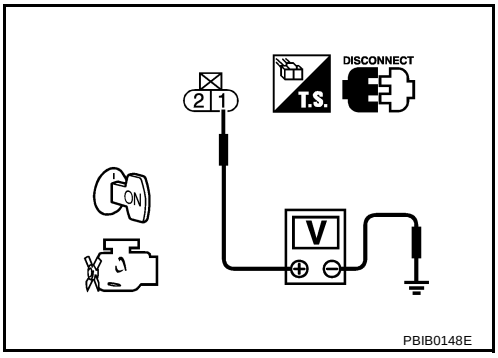

OK or NG

OK >> GO TO 3.
NG >> GO TO 2.

2. DETECT MALFUNCTIONING PART

Check the following.

- Harness connectors E211, M41
- Harness connectors M82, F102
- Harness for open or short between EVAP canister purge volume control solenoid valve and IPDM E/R
- Harness for open or short between EVAP canister purge volume control solenoid valve and ECM

>> Repair open circuit or short to ground or short to power in harness or connectors.

3. CHECK EVAP CANISTER PURGE VOLUME CONTROL SOLENOID VALVE OUTPUT SIGNAL CIRCUIT FOR OPEN AND SHORT

1. Turn ignition switch OFF.
2. Disconnect ECM harness connector.
3. Check harness continuity between ECM terminal 45 and EVAP canister purge volume control solenoid valve terminal 2. Refer to Wiring Diagram.

Continuity should exist.

4. Also check harness for short to ground and short to power.

OK or NG

OK (With CONSULT-II)>>GO TO 4.
OK (Without CONSULT-II)>>GO TO 5.
NG >> Repair open circuit or short to ground or short to power in harness or connectors.

4. CHECK EVAP CANISTER PURGE VOLUME CONTROL SOLENOID VALVE OPERATION

With CONSULT-II

1. Reconnect all harness connectors disconnected.
2. Start engine.
3. Perform “PURG VOL CONT/V” in “ACTIVE TEST” mode with CONSULT-II. Check that engine speed varies according to the valve opening.

ACTIVE TEST	
PURG VOL CONT/V	0 %
MONITOR	
ENG SPEED	XXX rpm
HO2S1 MNTR (B1)	LEAN
HO2S1 MNTR (B2)	LEAN
A/F ALPHA-B1	XXX %
A/F ALPHA-B2	XXX %

PBIB0147E

OK or NG

OK >> GO TO 6.
NG >> GO TO 5.

5. CHECK EVAP CANISTER PURGE VOLUME CONTROL SOLENOID VALVE

Refer to EC-1074, "Component Inspection" .

OK or NG

OK >> GO TO 6.
NG >> Replace EVAP canister purge volume control solenoid valve.

6. CHECK INTERMITTENT INCIDENT

Refer to EC-854, "TROUBLE DIAGNOSIS FOR INTERMITTENT INCIDENT" .

>> **INSPECTION END**

Component Inspection

ABS007O4

EVAP CANISTER PURGE VOLUME CONTROL SOLENOID VALVE

With CONSULT-II

Check air passage continuity of EVAP canister purge volume control solenoid valve under the following conditions.

Condition (PURG VOL CONT/V value)	Air passage continuity between A and B
100%	Yes
0%	No

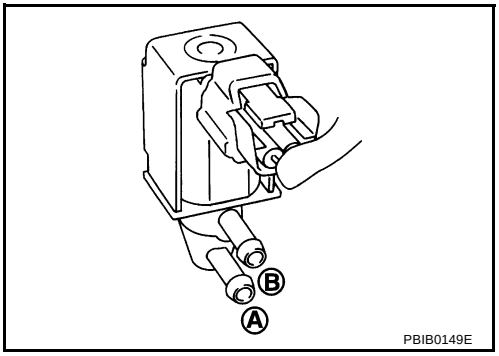

PBIB0149E

Without CONSULT-II

Check air passage continuity of EVAP canister purge volume control solenoid valve under the following conditions.

Condition	Air passage continuity between A and B
12V direct current supply between terminals 1 and 2	Yes
No supply	No

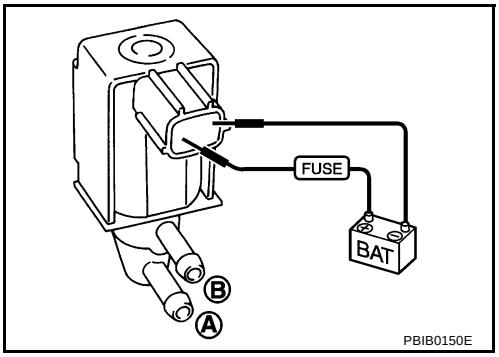

PBIB0150E

Removal and Installation

ABS007O5

EVAP CANISTER PURGE VOLUME CONTROL SOLENOID VALVE

Refer to EM-178, "INTAKE MANIFOLD" .

DTC P0447 EVAP CANISTER VENT CONTROL VALVE

PFP:14935

Component Description

ABS007O6

The EVAP canister vent control valve is located on the EVAP canister and is used to seal the canister vent.
This solenoid valve responds to signals from the ECM. When the ECM sends an ON signal, the coil in the solenoid valve is energized. A plunger will then move to seal the canister vent. The ability to seal the vent is necessary for the on board diagnosis of other evaporative emission control system components.
This solenoid valve is used only for diagnosis, and usually remains opened.
When the vent is closed, under normal purge conditions, the evaporative emission control system is depressurized and allows “EVAP Control System” diagnosis.

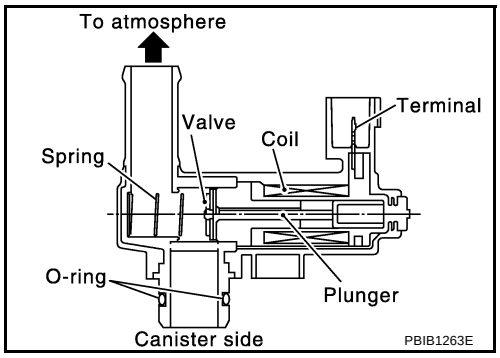

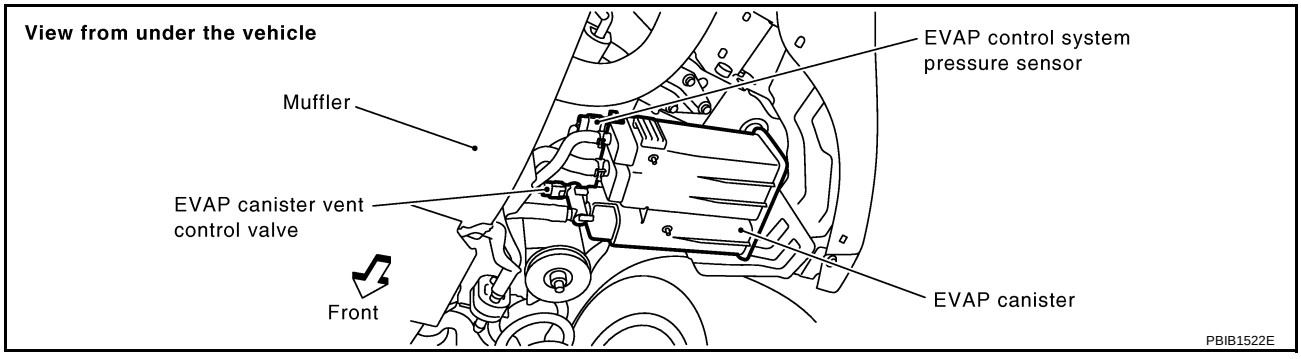

CONSULT-II Reference Value in Data Monitor Mode

ABS007O7

Specification data are reference values.

MONITOR ITEM	CONDITION	SPECIFICATION
VENT CONT/V	● Ignition switch: ON	OFF

On Board Diagnosis Logic

ABS007O8

DTC No.	Trouble diagnosis name	DTC detecting condition	Possible cause
P0447 0447	EVAP canister vent control valve circuit open	An improper voltage signal is sent to ECM through EVAP canister vent control valve.	● Harness or connectors (The valve circuit is open or shorted.) ● EVAP canister vent control valve

DTC Confirmation Procedure

ABS007O9

NOTE:
If DTC Confirmation Procedure has been previously conducted, always turn ignition switch OFF and wait at least 10 seconds before conducting the next test.
TESTING CONDITION:
Before performing the following procedure, confirm battery voltage is more than 11V at idle.

WITH CONSULT-II

1. Turn ignition switch ON.
2. Select “DATA MONITOR” mode with CONSULT-II.
3. Start engine and wait at least 8 seconds.
4. If 1st trip DTC is detected, go to EC-1079, "Diagnostic Procedure" .

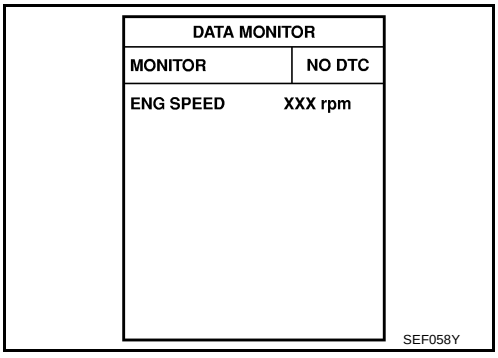

WITH GST

Follow the procedure “WITH CONSULT-II” above.

Wiring Diagram

ABS007OA

EC-VENT/V-01

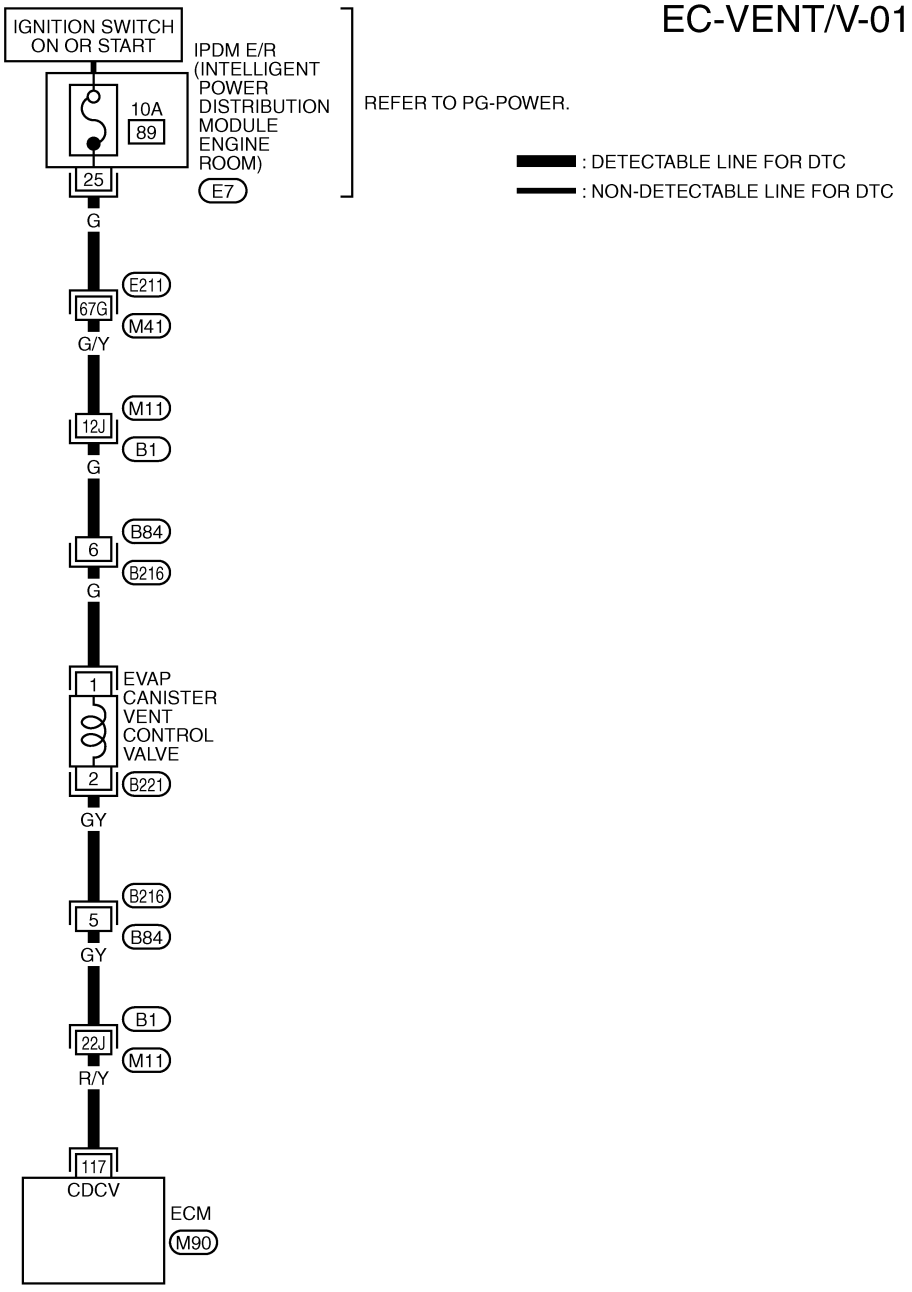

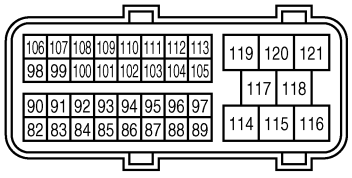

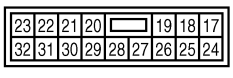

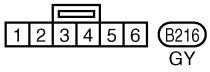

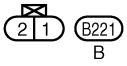

REFER TO THE FOLLOWING.
E211 , B1 -SUPER MULTIPLE JUNCTION (SMJ)

TBWH0110E

Specification data are reference values and are measured between each terminal and ground.

CAUTION:
Do not use ECM ground terminals when measuring input/output voltage. Doing so may result in damage to the ECM's transistor. Use a ground other than ECM terminals, such as the ground.

TERMINAL NO.	WIRE COLOR	ITEM	CONDITION	DATA (DC Voltage)
117	R/Y	EVAP canister vent control valve	**[Ignition switch: ON]**	BATTERY VOLTAGE (11 - 14V)

Diagnostic Procedure

ABS007OB

1. INSPECTION START

Do you have CONSULT-II?

Yes or No

Yes >> GO TO 2.
No >> GO TO 3.

2. CHECK EVAP CANISTER VENT CONTROL VALVE CIRCUIT

With CONSULT-II

1. Turn ignition switch OFF and then turn ON.
2. Select “VENT CONTROL/V” in “ACTIVE TEST” mode with CONSULT-II.
3. Touch “ON/OFF” on CONSULT-II screen.
4. Check for operating sound of the valve.
   Clicking noise should be heard.

OK or NG

OK >> GO TO 7.
NG >> GO TO 3.

ACTIVE TEST	
VENT CONTROL/V	OFF
MONITOR	
ENG SPEED	XXX rpm
A/F ALPHA-B1	XXX %
A/F ALPHA-B2	XXX %
HO2S1 (B1)	XXX V
HO2S1 (B2)	XXX V

PBIB0151E

3. CHECK EVAP CANISTER VENT CONTROL VALVE POWER SUPPLY CIRCUIT

1. Turn ignition switch OFF.
2. Disconnect EVAP canister vent control valve harness connector.

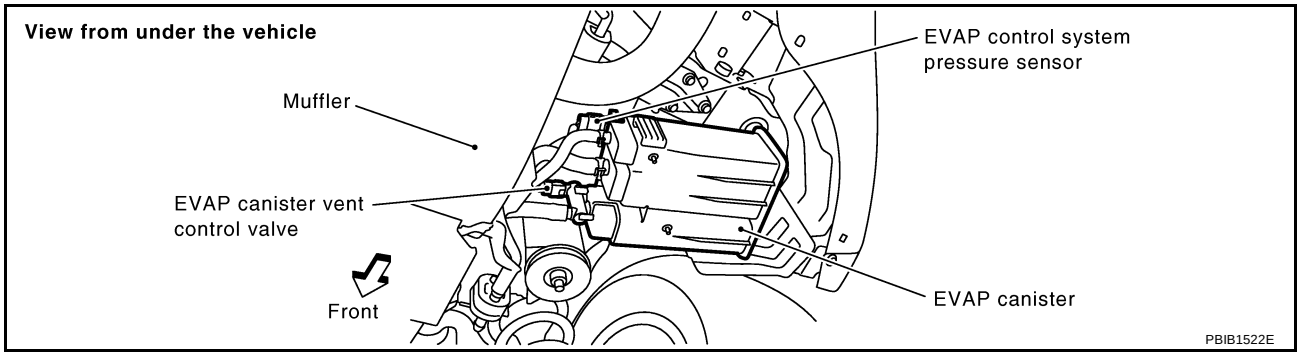

3. Turn ignition switch ON.
4. Check voltage between EVAP canister vent control valve terminal 1 and ground with CONSULT-II or tester.

Voltage: Battery voltage

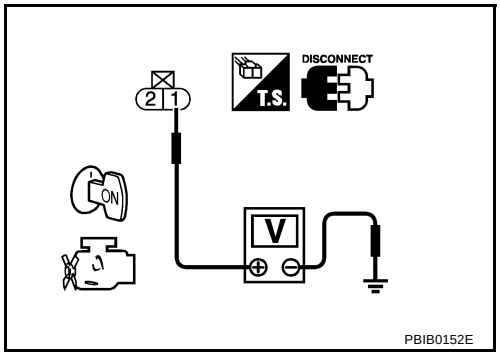

OK or NG

OK >> GO TO 5.
NG >> GO TO 4.

4. DETECT MALFUNCTIONING PART

Check the following.

- Harness connectors E211, M41
- Harness connectors M11, B1
- Harness connectors B84, B216
- IPDM E/R harness connector E7
- 10A fuse
- Harness for open or short between EVAP canister vent control valve and IPDM E/R

>> Repair open circuit or short to ground or short to power in harness or connectors.

5. CHECK EVAP CANISTER VENT CONTROL VALVE OUTPUT SIGNAL CIRCUIT FOR OPEN AND SHORT

1. Turn ignition switch OFF.
2. Disconnect ECM harness connector.
3. Check harness continuity between ECM terminal 117 and EVAP canister vent control valve terminal 2. Refer to Wiring Diagram.

Continuity should exist.

4. Also check harness for short to ground and short to power.

OK or NG

OK >> GO TO 7.
NG >> GO TO 6.

6. DETECT MALFUNCTIONING PART

Check the following.

- Harness connectors B216, B84
- Harness connectors M11, B1
- Harness for open or short between EVAP canister vent control valve and ECM

>> Repair open circuit or short to ground or short to power in harness or connectors.

7. CHECK RUBBER TUBE FOR CLOGGING

1. Disconnect rubber tube connected to EVAP canister vent control valve.
2. Check the rubber tube for clogging.

OK or NG

OK >> GO TO 8.
NG >> Clean the rubber tube using an air blower.

8. CHECK EVAP CANISTER VENT CONTROL VALVE

Refer to EC-1081, "Component Inspection" .

OK or NG

OK >> GO TO 9.
NG >> Replace EVAP canister vent control valve.

9. CHECK INTERMITTENT INCIDENT

Refer to EC-854, "TROUBLE DIAGNOSIS FOR INTERMITTENT INCIDENT" .

>> **INSPECTION END**

Component Inspection

ABS007OC

EVAP CANISTER VENT CONTROL VALVE

With CONSULT-II

1. Remove EVAP canister vent control valve from EVAP canister.
2. Check portion **B** of EVAP canister vent control valve for being rusted.
   If NG, replace EVAP canister vent control valve.
   If OK, go to next step.
3. Reconnect harness connectors disconnected.
4. Turn ignition switch ON.

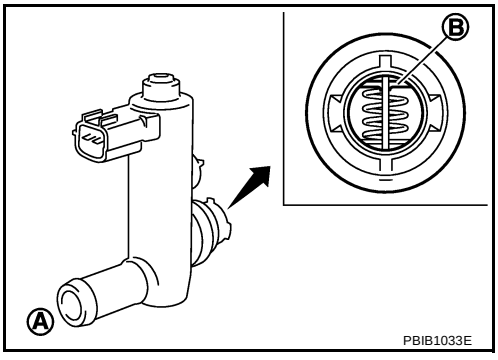

5. Perform “VENT CONTROL/V” in “ACTIVE TEST” mode.
6. Check air passage continuity and operation delay time.
   Make sure new O-ring is installed properly.

Condition VENT CONTROL/V	Air passage continuity between A and B
ON	No
OFF	Yes

Operation takes less than 1 second.

If NG, replace EVAP canister vent control valve.
If OK, go to next step.

ACTIVE TEST	
VENT CONTROL/V	OFF
MONITOR	
ENG SPEED	XXX rpm
A/F ALPHA-B1	XXX %
A/F ALPHA-B2	XXX %
HO2S1 (B1)	XXX V
HO2S1 (B2)	XXX V

PBIB0151E

7. Clean the air passage (portion **A** to **B**) of EVAP canister vent control valve using an air blower.
8. Perform step 6 again.

Without CONSULT-II

1. Remove EVAP canister vent control valve from EVAP canister.
2. Check portion **B** of EVAP canister vent control valve for being rusted.

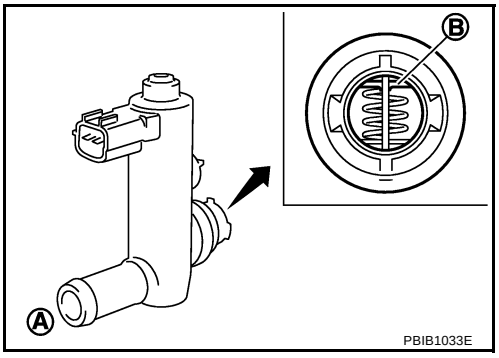

PBIB1033E

3. Check air passage continuity and operation delay time under the following conditions.
   Make sure new O-ring is installed properly.

Condition	Air passage continuity between A and B
12V direct current supply between terminals 1 and 2	No
OFF	Yes

Operation takes less than 1 second.

If NG, replace EVAP canister vent control valve.
If OK, go to next step.

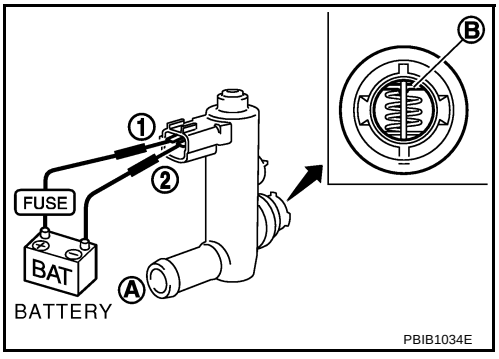

PBIB1034E

4. Clean the air passage (portion **A** to **B**) of EVAP canister vent control valve using an air blower.
5. Perform step 3 again.

DTC P0451 EVAP CONTROL SYSTEM PRESSURE SENSOR

PFP:22365

Component Description

ABS008GH

The EVAP control system pressure sensor detects pressure in the purge line. The sensor output voltage to the ECM increases as pressure increases.

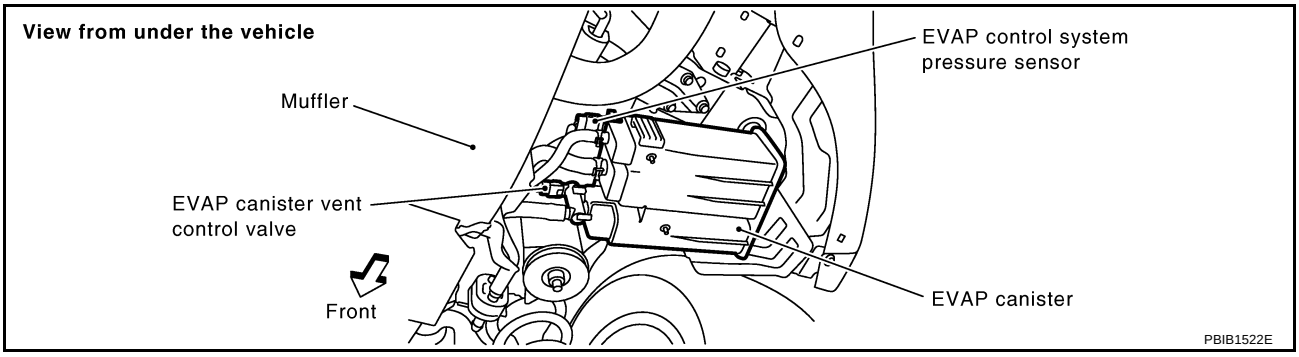

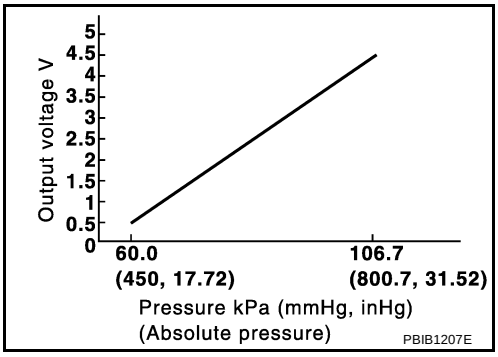

CONSULT-II Reference Value in Data Monitor Mode

ABS008GI

Specification data are reference values.

MONITOR ITEM	CONDITION	SPECIFICATION
EVAP SYS PRES	● Ignition switch: ON	Approx. 1.8 - 4.8V

On Board Diagnosis Logic

ABS008GJ

NOTE:
If DTC P0451 is displayed with DTC P1229, first perform the trouble diagnosis for DTC P1229. Refer to EC-1229 .

DTC No.	Trouble diagnosis name	DTC detecting condition	Possible cause
P0451 0451	EVAP control system pressure sensor performance	ECM detects a sloshing signal from the EVAP control system pressure sensor	● Harness or connectors ● EVAP control system pressure sensor

DTC Confirmation Procedure

ABS008GK

NOTE:
If DTC Confirmation Procedure has been previously conducted, always turn ignition switch OFF and wait at least 10 seconds before conducting the next test.

WITH CONSULT-II

1. Turn ignition switch OFF and wait at least 10 seconds.
2. Turn ignition switch ON and select “DATA MONITOR” mode with CONSULT-II.
3. Start engine and wait at least 40 seconds.

   NOTE:
   Do not depress accelerator pedal even slightly.
   If 1st trip DTC is detected, go to EC-1084, "Diagnostic Procedure" .

DATA MONITOR	
MONITOR	NO DTC
ENG SPEED	XXX rpm
COOLAN TEMP/S	XXX °C
FUEL T/TMP SE	XXX °C

SEF194Y

WITH GST

Follow the procedure “WITH CONSULT-II” above.

Diagnostic Procedure

ABS008GL

1. CHECK GROUND CONNECTIONS

1. Turn ignition switch OFF.
2. Loosen and retighten three ground screws on the body.
   Refer to EC-861, "Ground Inspection" .

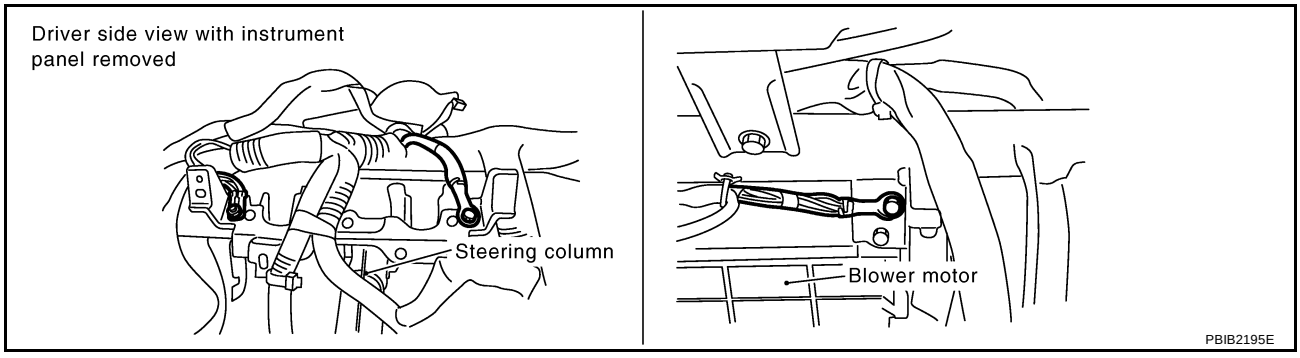

OK or NG

OK >> GO TO 2.
NG >> Repair or replace ground connections.

2. CHECK EVPA CONTROL SYSTEM PRESSURE SENSOR CONNECTOR FOR WATER

1. Disconnect EVAP control system pressure sensor harness connector.

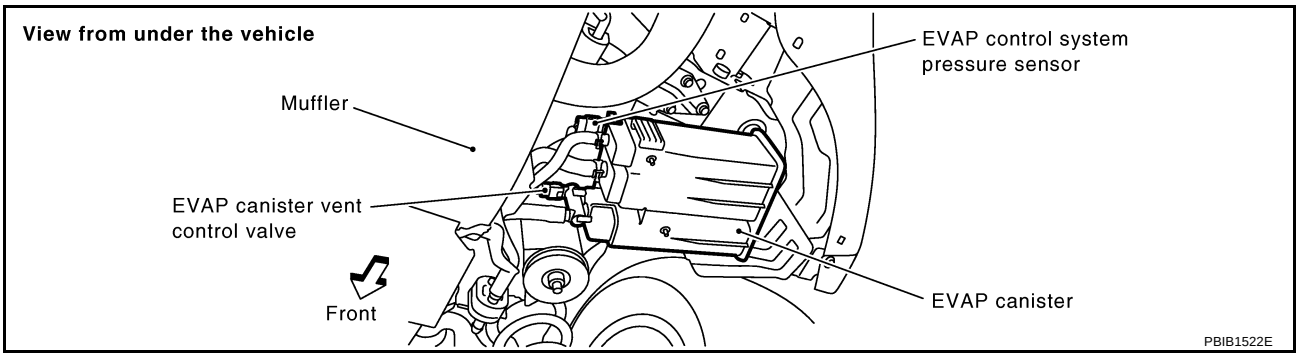

2. Check sensor harness connector for water.

Water should not exist.

OK or NG

OK >> GO TO 3.
NG >> Repair or replace harness connector.

3. CHECK EVAP CONTROL SYSTEM PRESSURE SENSOR

Refer to EC-1085, "Component Inspection" .

OK or NG

OK >> GO TO 4.
NG >> Replace EVAP control system pressure sensor.

4. CHECK INTERMITTENT INCIDENT

Refer to EC-854, "TROUBLE DIAGNOSIS FOR INTERMITTENT INCIDENT" .
For Wiring Diagram, refer to EC-1088 .

>> **INSPECTION END**

Component Inspection

ABS008GM

EVAP CONTROL SYSTEM PRESSURE SENSOR

1. Remove EVAP control system pressure sensor with its harness connector connected from EVAP canister. **Always replace O-ring with a new one.**
2. Install a vacuum pump to EVAP control system pressure sensor.
3. Turn ignition switch ON and check output voltage between ECM terminal 32 and ground under the following conditions.

Applied vacuum kPa (mmHg, inHg)	Voltage V
Not applied	1.8 - 4.8
-26.7 (-200, -7.87)	2.1 to 2.5V lower than above value

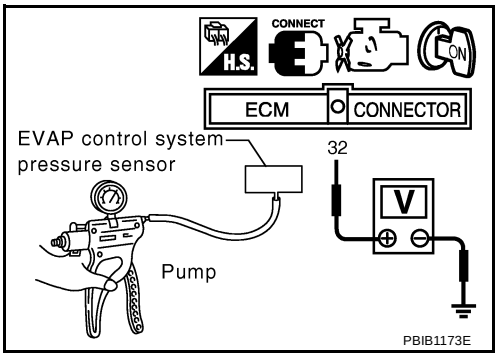

CAUTION:
- **Always calibrate the vacuum pump gauge when using it.**
- **Do not apply below -93.3 kPa (-700 mmHg, -27.56 inHg) or pressure over 101.3 kPa (760 mmHg, 29.92 inHg).**

4. If NG, replace EVAP control system pressure sensor.

DTC P0452 EVAP CONTROL SYSTEM PRESSURE SENSOR

PFP:25085

Component Description

ABS007OJ

The EVAP control system pressure sensor detects pressure in the purge line. The sensor output voltage to the ECM increases as pressure increases.

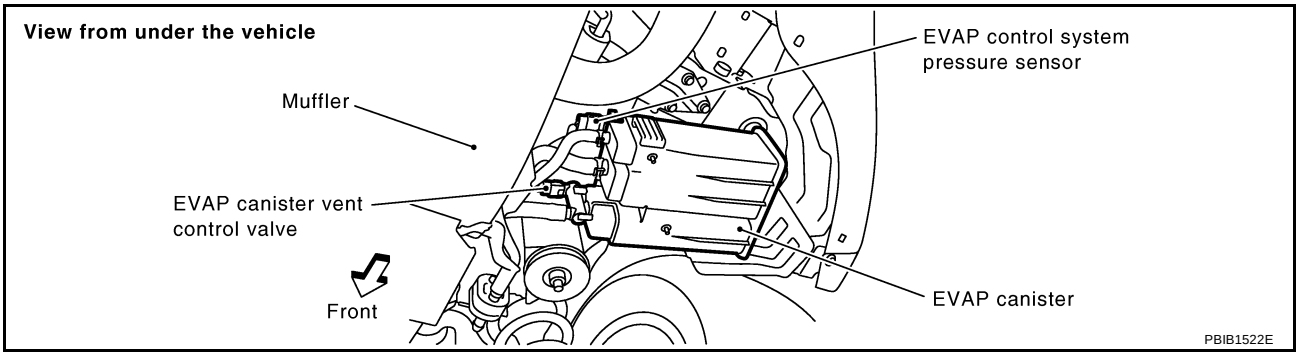

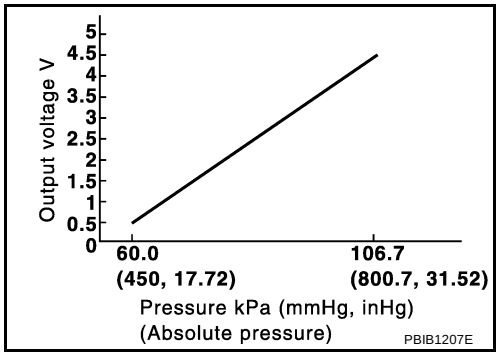

CONSULT-II Reference Value in Data Monitor Mode

ABS007OK

Specification data are reference values.

MONITOR ITEM	CONDITION	SPECIFICATION
EVAP SYS PRES	● Ignition switch: ON	Approx. 1.8 - 4.8V

On Board Diagnosis Logic

ABS007OL

NOTE:
If DTC P0452 is displayed with DTC P1229, first perform the trouble diagnosis for DTC P1229. Refer to EC-1229 .

DTC No.	Trouble diagnosis name	DTC detecting condition	Possible cause
P0452 0452	EVAP control system pressure sensor low input	An excessively low voltage from the sensor is sent to ECM.	● Harness or connectors (The sensor circuit is open or shorted.) ● EVAP control system pressure sensor

DTC Confirmation Procedure

ABS007OM

NOTE:
If DTC Confirmation Procedure has been previously conducted, always turn ignition switch OFF and wait at least 10 seconds before conducting the next test.
TESTING CONDITION:
Always perform test at a temperature of 5°C (41°F) or more.

WITH CONSULT-II

1. Start engine and warm it up to normal operating temperature.
2. Turn ignition switch OFF and wait at least 10 seconds.
3. Turn ignition switch ON.
4. Select “DATA MONITOR” mode with CONSULT-II.
5. Make sure that “FUEL T/TMP SE” is more than 0°C (32°F).
6. Start engine and wait at least 20 seconds.
   If 1st trip DTC is detected, go to EC-1089, "Diagnostic Procedure" .

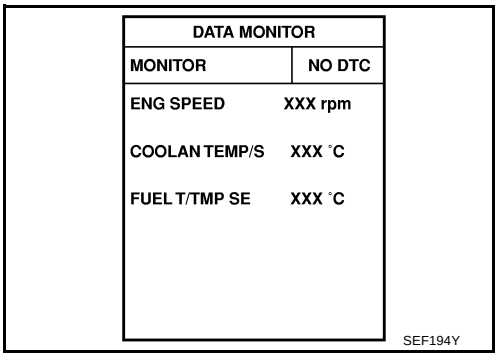

WITH GST

1. Start engine and warm it up to normal operating temperature.
2. Check that voltage between ECM terminal 107 (Fuel tank temperature sensor signal) and ground is less than 4.2V.
3. Turn ignition switch OFF and wait at least 10 seconds.
4. Start engine and wait at least 20 seconds.
5. Select “Service $07” with GST.
   If 1st trip DTC is detected, go to EC-1089, "Diagnostic Procedure" .

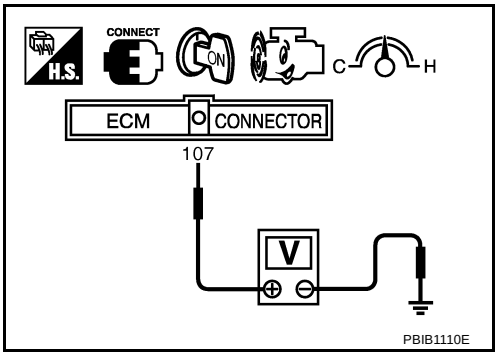

Wiring Diagram

ABS007ON

EC-PRE/SE-01

: DETECTABLE LINE FOR DTC
: NON-DETECTABLE LINE FOR DTC

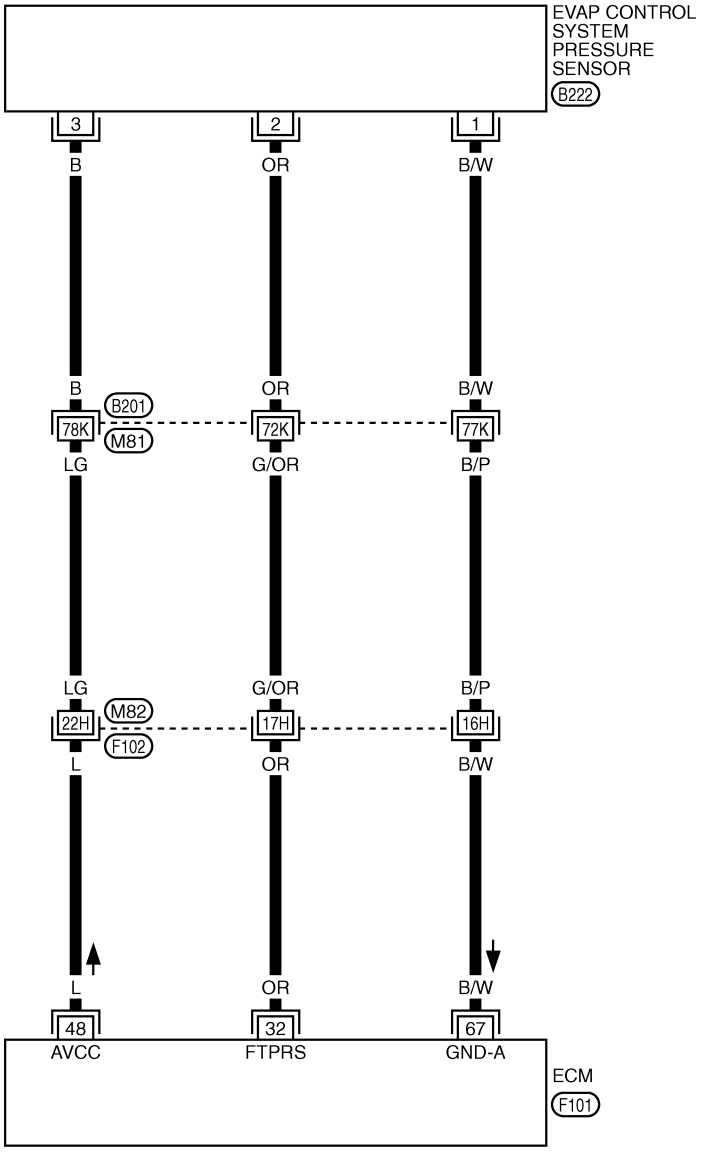

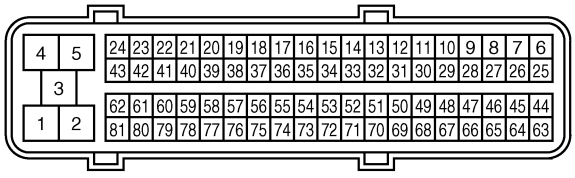

REFER TO THE FOLLOWING.
F102 , B201 -SUPER MULTIPLE JUNCTION (SMJ)

TBWH0115E

Specification data are reference values and are measured between each terminal and ground.

CAUTION:
Do not use ECM ground terminals when measuring input/output voltage. Doing so may result in damage to the ECM's transistor. Use a ground other than ECM terminals, such as the ground.

TERMINAL NO.	WIRE COLOR	ITEM	CONDITION	DATA (DC Voltage)
32	OR	EVAP control system pressure sensor	**[Ignition switch: ON]**	Approximately 1.8 - 4.8V
48	L	Sensor power supply (EVAP control system pressure sensor)	**[Ignition switch: ON]**	Approximately 5V
67	B/W	Sensor ground	**[Engine is running]** ● **Warm-up condition** ● Idle speed	Approximately 0V

Diagnostic Procedure

ABS007OO

1. CHECK GROUND CONNECTIONS

1. Turn ignition switch OFF.
2. Loosen and retighten three ground screws on the body.
   Refer to EC-861, "Ground Inspection" .

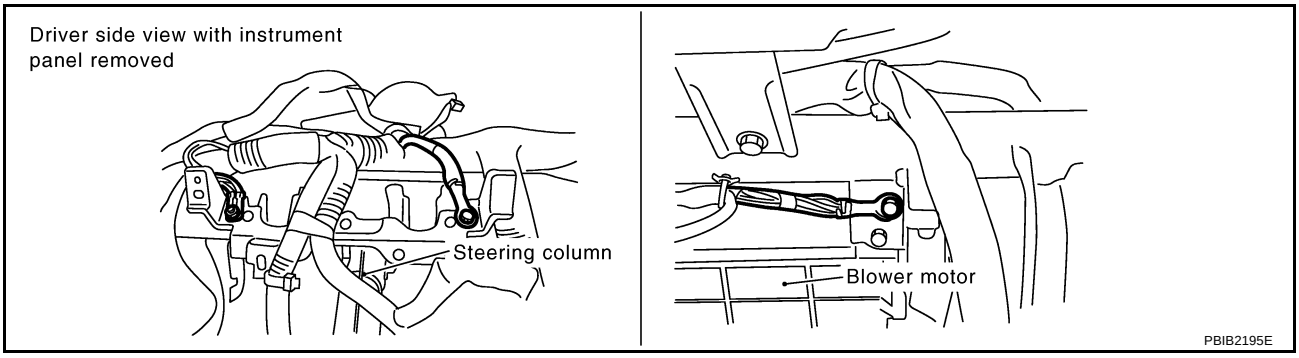

OK or NG

OK >> GO TO 2.
NG >> Repair or replace ground connections.

2. CHECK CONNECTOR

1. Disconnect EVAP control system pressure sensor harness connector.

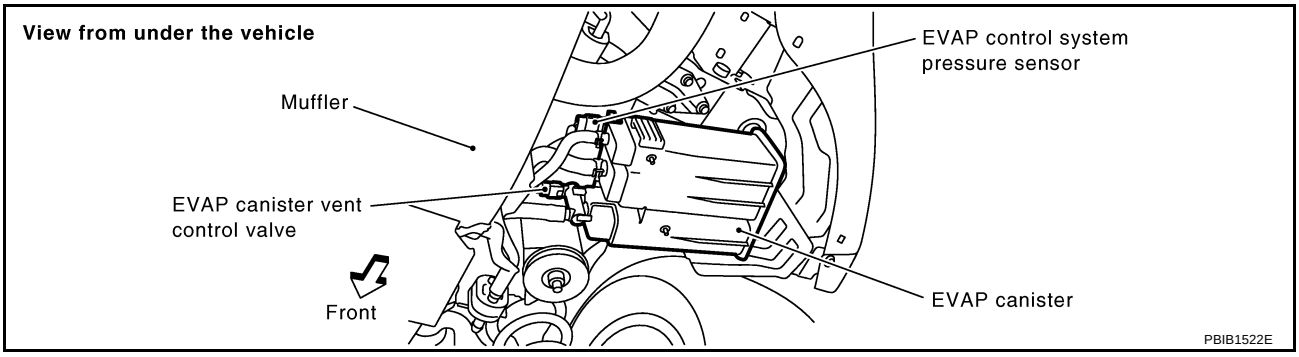

2. Check sensor harness connector for water.

Water should not exist.

OK or NG

OK >> GO TO 3.
NG >> Repair or replace harness connector.

3. CHECK EVAP CONTROL SYSTEM PRESSURE SENSOR POWER SUPPLY CIRCUIT

1. Turn ignition switch ON.
2. Check voltage between EVAP control system pressure sensor terminal 3 and ground with CONSULT-II or tester.

   Voltage: Approximately 5V

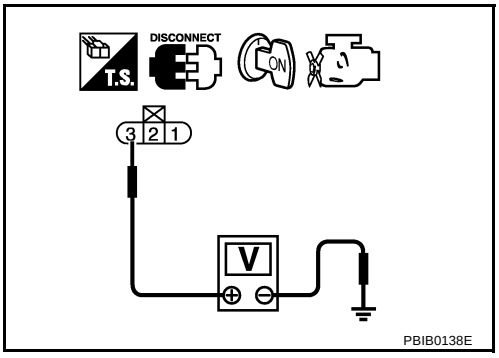

OK or NG

OK >> GO TO 5.
NG >> GO TO 4.

4. DETECT MALFUNCTIONING PART

Check the following.

- Harness connectors B201, M81
- Harness connectors M82, F102
- Harness for open or short between EVAP control system pressure sensor and ECM

>> Repair open circuit or short to ground or short to power in harness or connectors.

5. CHECK EVAP CONTROL SYSTEM PRESSURE SENSOR GROUND CIRCUIT FOR OPEN AND SHORT

1. Turn ignition switch OFF.
2. Disconnect ECM harness connector.
3. Check harness continuity between EVAP control system pressure sensor terminal 1 and ECM terminal 67.
   Refer to Wiring Diagram.

   Continuity should exist.

4. Also check harness for short to ground and short to power.

OK or NG

OK >> GO TO 7.
NG >> GO TO 6.

6. DETECT MALFUNCTIONING PART

Check the following.

- Harness connectors B201, M81
- Harness connectors M82, F102
- Harness for open or short between EVAP control system pressure sensor and ECM

>> Repair open circuit or short to ground or short to power in harness or connectors.

7. CHECK EVAP CONTROL SYSTEM PRESSURE SENSOR INPUT SIGNAL CIRCUIT FOR OPEN AND SHORT

1. Check harness continuity between ECM terminal 32 and EVAP control system pressure sensor terminal 2.
   Refer to Wiring Diagram.

   Continuity should exist.

2. Also check harness for short to ground and short to power.

OK or NG

OK >> GO TO 9.
NG >> GO TO 8.

8. DETECT MALFUNCTIONING PART

Check the following.

- Harness connectors B201, M81
- Harness connectors M82, F102
- Harness for open or short between EVAP control system pressure sensor and ECM

>> Repair open circuit or short to ground or short to power in harness or connectors.

9. CHECK EVAP CONTROL SYSTEM PRESSURE SENSOR

Refer to EC-1091, "Component Inspection" .

OK or NG

OK >> GO TO 10.
NG >> Replace EVAP control system pressure sensor.

10. CHECK INTERMITTENT INCIDENT

Refer to EC-854, "TROUBLE DIAGNOSIS FOR INTERMITTENT INCIDENT" .

>> **INSPECTION END**

Component Inspection

ABS007OP

EVAP CONTROL SYSTEM PRESSURE SENSOR

1. Remove EVAP control system pressure sensor with its harness connector connected from EVAP canister. **Always replace O-ring with a new one.**
2. Install a vacuum pump to EVAP control system pressure sensor.
3. Turn ignition switch ON and check output voltage between ECM terminal 32 and ground under the following conditions.

Applied vacuum kPa (mmHg, inHg)	Voltage V
Not applied	1.8 - 4.8
-26.7 (-200, -7.87)	2.1 to 2.5V lower than above value

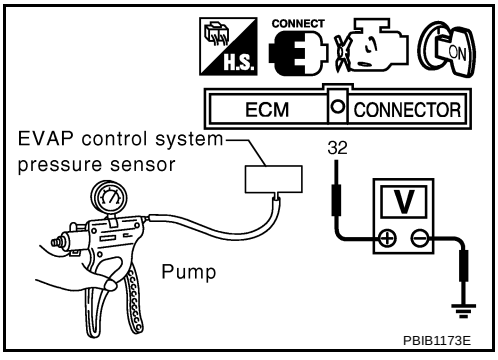

CAUTION:

- **Always calibrate the vacuum pump gauge when using it.**
- **Do not apply below -93.3 kPa (-700 mmHg, -27.56 inHg) or pressure over 101.3 kPa (760 mmHg, 29.92 inHg).**

4. If NG, replace EVAP control system pressure sensor.

DTC P0453 EVAP CONTROL SYSTEM PRESSURE SENSOR

PFP:25085

Component Description

ABS007OQ

The EVAP control system pressure sensor detects pressure in the purge line. The sensor output voltage to the ECM increases as pressure increases.

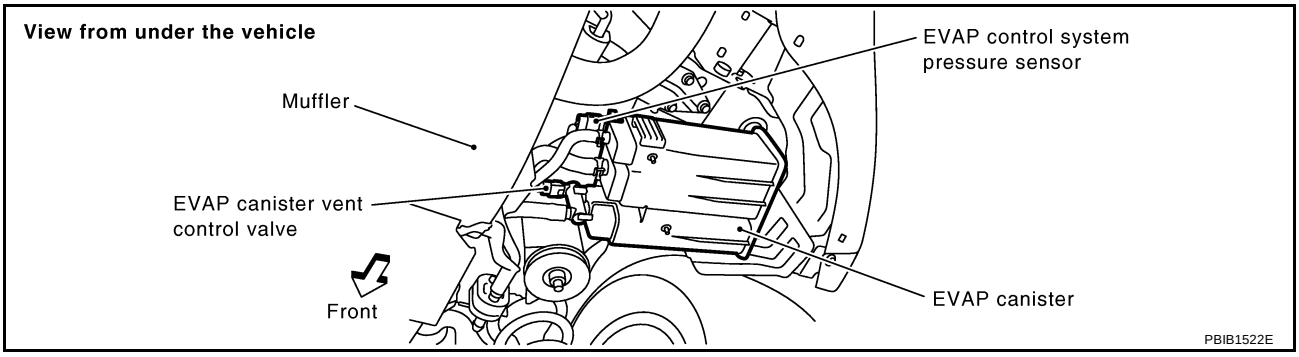

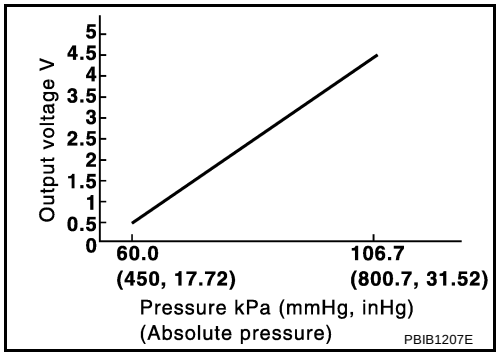

CONSULT-II Reference Value in Data Monitor Mode

ABS007OR

Specification data are reference values.

MONITOR ITEM	CONDITION	SPECIFICATION
EVAP SYS PRES	● Ignition switch: ON	Approx. 1.8 - 4.8V

On Board Diagnosis Logic

ABS007OS

NOTE:
If DTC P0453 is displayed with DTC P1229, first perform the trouble diagnosis for DTC P1229. Refer to EC-1229 .

DTC No.	Trouble diagnosis name	DTC detecting condition	Possible cause
P0453 0453	EVAP control system pressure sensor high input	An excessively high voltage from the sensor is sent to ECM.	● Harness or connectors (The sensor circuit is open or shorted.) ● EVAP control system pressure sensor ● EVAP canister vent control valve ● EVAP canister ● Rubber hose from EVAP canister vent control valve to vehicle frame

DTC Confirmation Procedure

ABS007OT

NOTE:
If DTC Confirmation Procedure has been previously conducted, always turn ignition switch OFF and wait at least 10 seconds before conducting the next test.
TESTING CONDITION:
Always perform test at a temperature of 5°C (41°F) or more.

WITH CONSULT-II

1. Start engine and warm it up to normal operating temperature.
2. Turn ignition switch OFF and wait at least 10 seconds.
3. Turn ignition switch ON.
4. Select “DATA MONITOR” mode with CONSULT-II.
5. Make sure that “FUEL T/TMP SE” is more than 0°C (32°F).
6. Start engine and wait at least 20 seconds.
7. If 1st trip DTC is detected, go to EC-1095, "Diagnostic Procedure" .

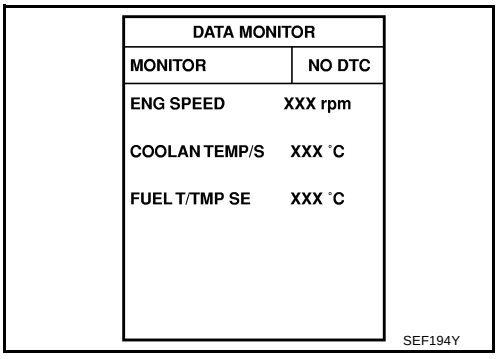

WITH GST

1. Start engine and warm it up to normal operating temperature.
2. Check that voltage between ECM terminal 107 (Fuel tank temperature sensor signal) and ground is less than 4.2V.
3. Turn ignition switch OFF and wait at least 10 seconds.
4. Start engine and wait at least 20 seconds.
5. Select “Service $07” with GST.
   If 1st trip DTC is detected, go to EC-1095, "Diagnostic Procedure" .

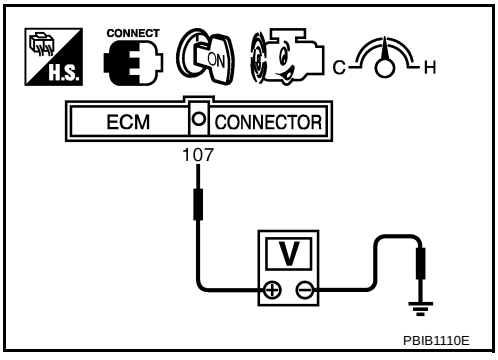

Wiring Diagram

ABS007OU

EC-PRE/SE-01

: DETECTABLE LINE FOR DTC
: NON-DETECTABLE LINE FOR DTC

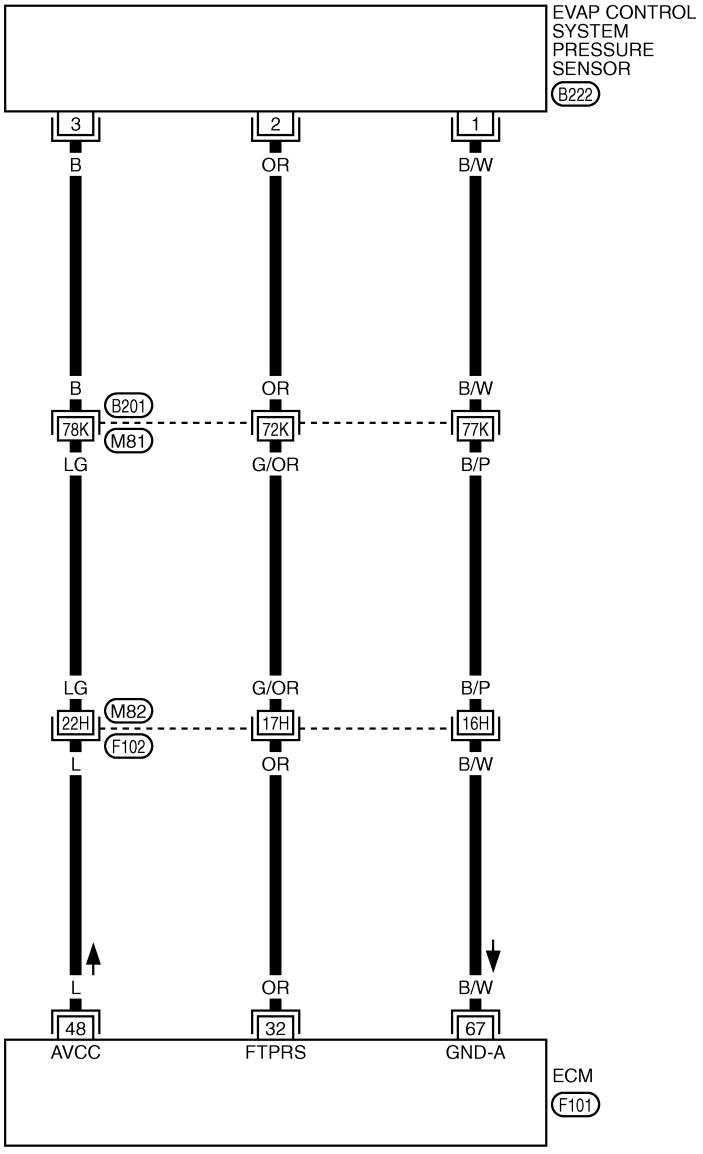

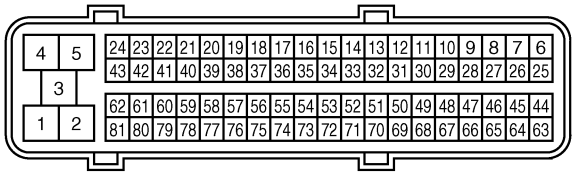

F101
B

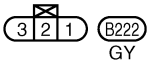

B222
GY

REFER TO THE FOLLOWING.
F102 , B201 -SUPER MULTIPLE JUNCTION (SMJ)

TBWH0115E

Specification data are reference values and are measured between each terminal and ground.

CAUTION:
Do not use ECM ground terminals when measuring input/output voltage. Doing so may result in damage to the ECM's transistor. Use a ground other than ECM terminals, such as the ground.

TERMINAL NO.	WIRE COLOR	ITEM	CONDITION	DATA (DC Voltage)
32	OR	EVAP control system pressure sensor	**[Ignition switch: ON]**	Approximately 1.8 - 4.8V
48	L	Sensor power supply (EVAP control system pressure sensor)	**[Ignition switch: ON]**	Approximately 5V
67	B/W	Sensor ground	**[Engine is running]** ● **Warm-up condition** ● Idle speed	Approximately 0V

Diagnostic Procedure

ABS007OV

1. CHECK GROUND CONNECTIONS

1. Turn ignition switch OFF.
2. Loosen and retighten three ground screws on the body.
   Refer to EC-861, "Ground Inspection" .

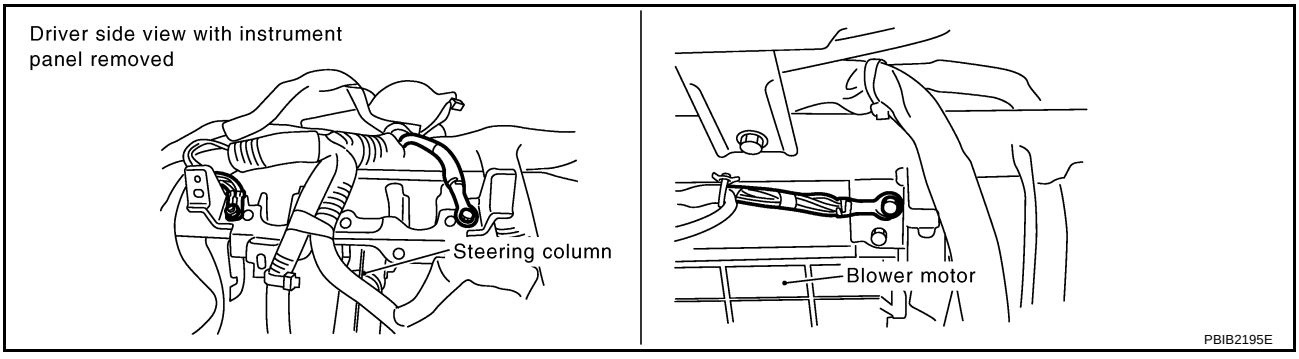

OK or NG

OK >> GO TO 2.
NG >> Repair or replace ground connections.

2. CHECK CONNECTOR

1. Disconnect EVAP control system pressure sensor harness connector.

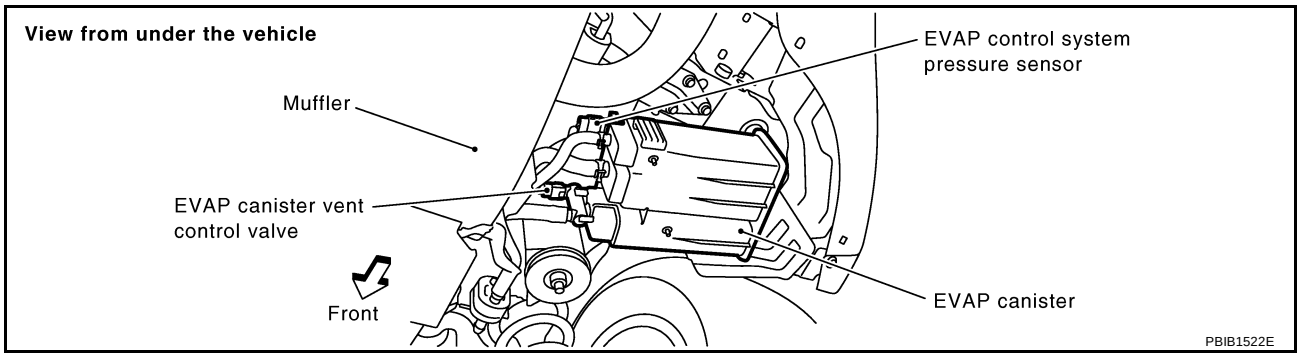

2. Check sensor harness connector for water.

Water should not exist.

OK or NG

OK >> GO TO 3.
NG >> Repair or replace harness connector.

3. CHECK EVAP CONTROL SYSTEM PRESSURE SENSOR POWER SUPPLY CIRCUIT

1. Turn ignition switch ON.
2. Check voltage between EVAP control system pressure sensor terminal 3 and ground with CONSULT-II or tester.

Voltage: Approximately 5V

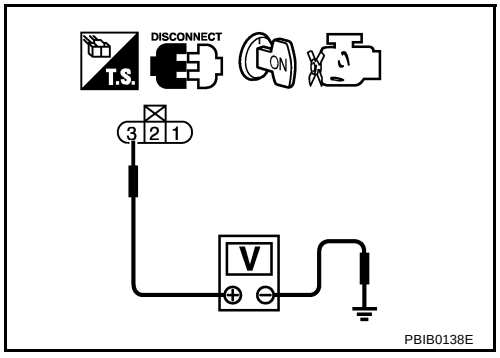

OK or NG

OK >> GO TO 5.
NG >> GO TO 4.

4. DETECT MALFUNCTIONING PART

Check the following.

- Harness connectors B201, M81
- Harness connectors M82, F102
- Harness for open or short between EVAP control system pressure sensor and ECM

>> Repair open circuit or short to ground or short to power in harness or connectors.

5. CHECK EVAP CONTROL SYSTEM PRESSURE SENSOR GROUND CIRCUIT FOR OPEN AND SHORT

1. Turn ignition switch OFF.
2. Disconnect ECM harness connector.
3. Check harness continuity between EVAP control system pressure sensor terminal 1 and ECM terminal 67.
   Refer to Wiring Diagram.

   Continuity should exist.

4. Also check harness for short to ground and short to power.

OK or NG

OK >> GO TO 7.
NG >> GO TO 6.

6. DETECT MALFUNCTIONING PART

Check the following.

- Harness connectors B201, M81
- Harness connectors M82, F102
- Harness for open or short between EVAP control system pressure sensor and ECM

>> Repair open circuit or short to ground or short to power in harness or connectors.

7. CHECK EVAP CONTROL SYSTEM PRESSURE SENSOR INPUT SIGNAL CIRCUIT FOR OPEN AND SHORT

1. Check harness continuity between ECM terminal 32 and EVAP control system pressure sensor terminal 2.
   Refer to Wiring Diagram.

   Continuity should exist.

2. Also check harness for short to ground and short to power.

OK or NG

OK >> GO TO 9.
NG >> GO TO 8.

8. DETECT MALFUNCTIONING PART

Check the following.

- Harness connectors B201, M81
- Harness connectors M82, F102
- Harness for open or short between EVAP control system pressure sensor and ECM

>> Repair open circuit or short to ground or short to power in harness or connectors.

9. CHECK RUBBER TUBE

1. Disconnect rubber tube connected to EVAP canister vent control valve.
2. Check the rubber tube for clogging.

OK or NG

OK >> GO TO 10.
NG >> Clean the rubber tube using an air blower, repair or replace rubber tube.

10. CHECK EVAP CANISTER VENT CONTROL VALVE

Refer to EC-1081, "Component Inspection" .

OK or NG

OK >> GO TO 11.
NG >> Replace EVAP canister vent control valve.

11. CHECK EVAP CONTROL SYSTEM PRESSURE SENSOR

Refer to EC-1099, "Component Inspection" .

OK or NG

OK >> GO TO 12.
NG >> Replace EVAP control system pressure sensor.

12. CHECK IF EVAP CANISTER SATURATED WITH WATER

1. Remove EVAP canister with EVAP canister vent control valve and EVAP control system pressure sensor attached.
2. Check if water will drain from the EVAP canister.

Yes or No

Yes >> GO TO 13.
No >> GO TO 15.

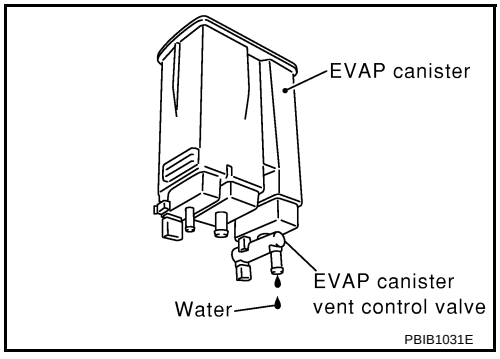

13. CHECK EVAP CANISTER

Weigh the EVAP canister with the EVAP canister vent control valve and EVAP control system pressure sensor attached.

The weight should be less than 2.1 kg (4.6 lb).

OK or NG

OK >> GO TO 15.
NG >> GO TO 14.

14. DETECT MALFUNCTIONING PART

Check the following.

- EVAP canister for damage
- EVAP hose between EVAP canister and vehicle frame for clogging or poor connection

>> Repair hose or replace EVAP canister.

15. CHECK INTERMITTENT INCIDENT

Refer to EC-854, "TROUBLE DIAGNOSIS FOR INTERMITTENT INCIDENT" .

>> **INSPECTION END**

Component Inspection

ABS007OW

EVAP CONTROL SYSTEM PRESSURE SENSOR

1. Remove EVAP control system pressure sensor with its harness connector connected from EVAP canister. **Always replace O-ring with a new one.**
2. Install a vacuum pump to EVAP control system pressure sensor.
3. Turn ignition switch ON and check output voltage between ECM terminal 32 and ground under the following conditions.

Applied vacuum kPa (mmHg, inHg)	Voltage V
Not applied	1.8 - 4.8
-26.7 (-200, -7.87)	2.1 to 2.5V lower than above value

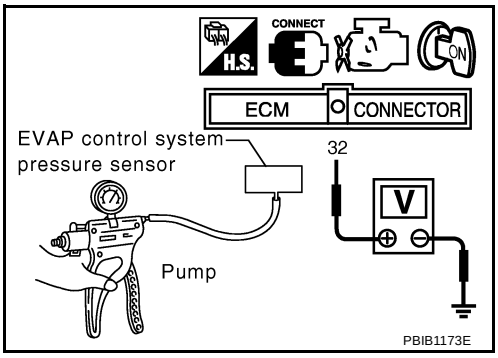

CAUTION:
- **Always calibrate the vacuum pump gauge when using it.**
- **Do not apply below -93.3 kPa (-700 mmHg, -27.56 inHg) or pressure over 101.3 kPa (760 mmHg, 29.92 inHg).**

4. If NG, replace EVAP control system pressure sensor.

DTC P0455 EVAP CONTROL SYSTEM

PFP:14950

On Board Diagnosis Logic

ABS007OX

This diagnosis detects a very large leak (fuel filler cap fell off etc.) in EVAP system between the fuel tank and EVAP canister purge volume control solenoid valve.

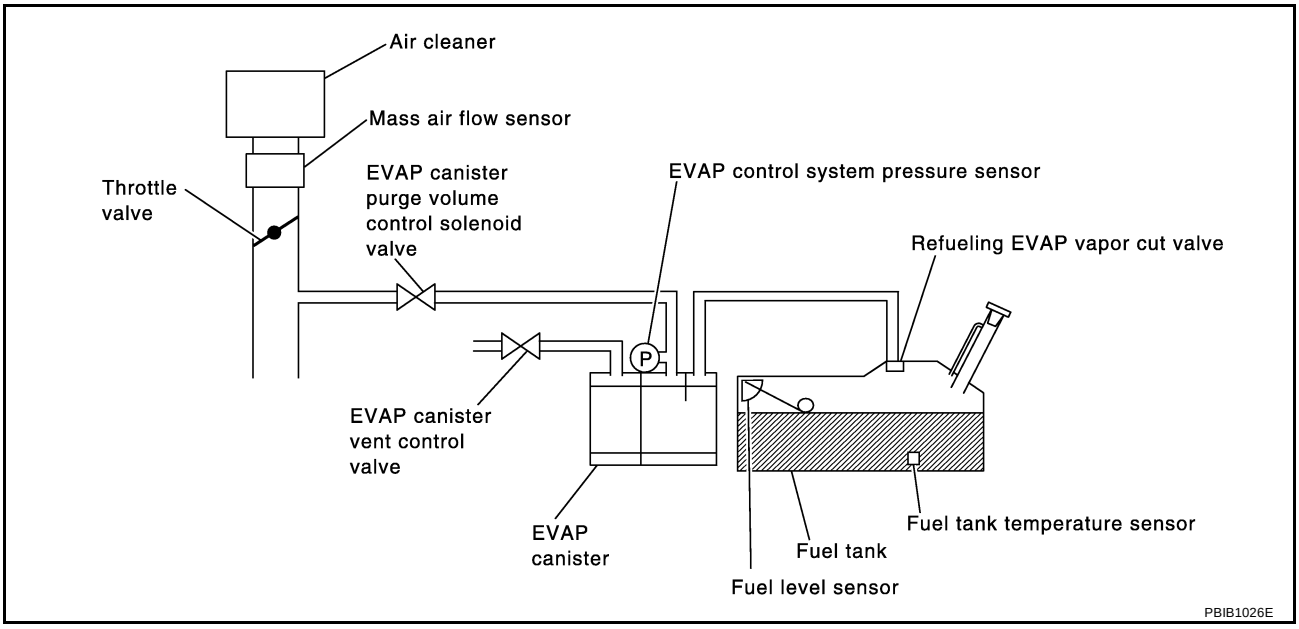

DTC No.	Trouble diagnosis name	DTC detecting condition	Possible cause
P0455 0455	EVAP control system gross leak detected	EVAP control system has a very large leak such as fuel filler cap fell off, EVAP control system does not operate properly.	● Fuel filler cap remains open or fails to close. ● Incorrect fuel tank vacuum relief valve ● Incorrect fuel filler cap used ● Foreign matter caught in fuel filler cap. ● Leak is in line between intake manifold and EVAP canister purge volume control solenoid valve. ● Foreign matter caught in EVAP canister vent control valve. ● EVAP canister or fuel tank leaks ● EVAP purge line (pipe and rubber tube) leaks ● EVAP purge line rubber tube bent. ● Loose or disconnected rubber tube ● EVAP canister vent control valve and the circuit ● EVAP canister purge volume control solenoid valve and the circuit ● Fuel tank temperature sensor ● O-ring of EVAP canister vent control valve is missing or damaged. ● EVAP control system pressure sensor ● Refueling EVAP vapor cut valve ● ORVR system leaks

CAUTION:

- **Use only a genuine NISSAN fuel filler cap as a replacement. If an incorrect fuel filler cap is used, the MIL may come on.**
- **If the fuel filler cap is not tightened properly, the MIL may come on.**

- **Use only a genuine NISSAN rubber tube as a replacement.**

DTC Confirmation Procedure

ABS007OY

CAUTION:
Never remove fuel filler cap during the DTC Confirmation Procedure.

NOTE:
- **Make sure that EVAP hoses are connected to EVAP canister purge volume control solenoid valve properly.**
- If DTC Confirmation Procedure has been previously conducted, always turn ignition switch OFF and wait at least 10 seconds before conducting the next test.

TESTING CONDITION:
- **Perform "DTC WORK SUPPORT" when the fuel level is between 1/4 and 3/4 full, and vehicle is placed on flat level surface.**
- **Open engine hood before conducting the following procedures.**

WITH CONSULT-II

1. Tighten fuel filler cap securely until ratcheting sound is heard.
2. Turn ignition switch ON.
3. Turn ignition switch OFF and wait at least 10 seconds.
4. Turn ignition switch ON and select "DATA MONITOR" mode with CONSULT-II.
5. Make sure that the following conditions are met.
   COOLAN TEMP/S: 0 - 70°C (32 - 158°F)
   INT/A TEMP SE: 0 - 60°C (32 - 140°F)
6. Select "EVAP SML LEAK P0442/P1442" of "EVAPORATIVE SYSTEM" in "DTC WORK SUPPORT" mode with CONSULT-II.
   Follow the instruction displayed.

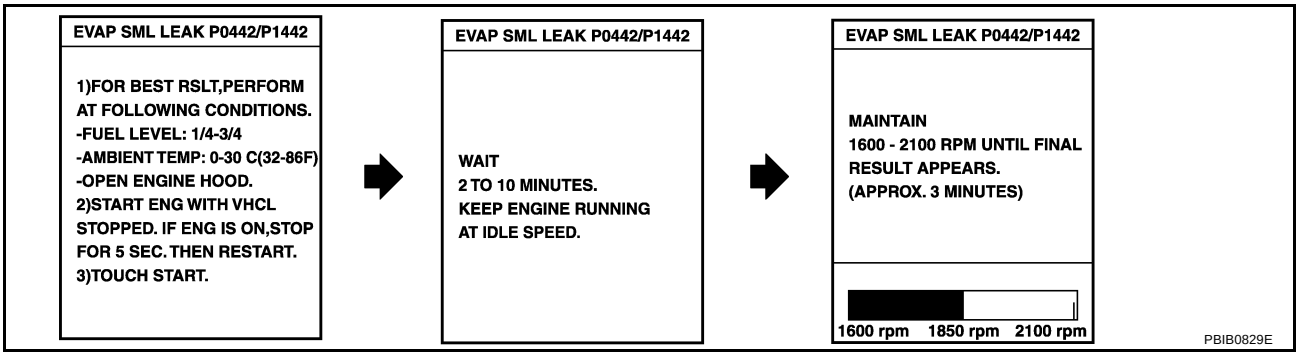

NOTE:
If the engine speed cannot be maintained within the range displayed on the CONSULT-II screen, go to EC-769, "Basic Inspection" .

7. Make sure that "OK" is displayed.
   If "NG" is displayed, select "SELF-DIAG RESULTS" mode and make sure that "EVAP GROSS LEAK [P0455]" is displayed. If it is displayed, refer to EC-1102, "Diagnostic Procedure" .
   If P0442 is displayed, perform Diagnostic Procedure for DTC P0442 EC-1063, "Diagnostic Procedure" .

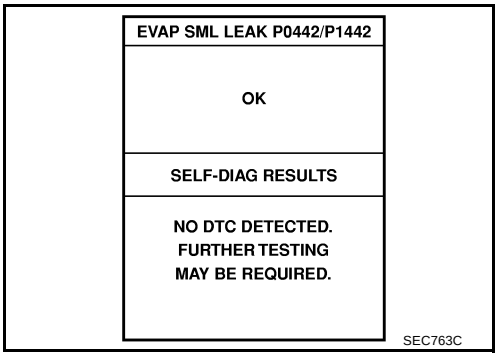

WITH GST

NOTE:
Be sure to read the explanation of EC-756, "Driving Pattern" before driving vehicle.

1. Start engine.
2. Drive vehicle according to EC-756, "Driving Pattern" .
3. Stop vehicle.
4. Turn ignition switch OFF, wait at least 10 seconds and then turn ON.
5. Select “Service $07” with GST.
   - If P0455 is displayed on the screen, go to EC-1102, "Diagnostic Procedure" .
   - If P0442 is displayed on the screen, go to EC-1063, "Diagnostic Procedure" .
   - If P0441 is displayed on the screen, go to EC-1058, "Diagnostic Procedure" .

Diagnostic Procedure

ABS007OZ

1. CHECK FUEL FILLER CAP DESIGN

1. Turn ignition switch OFF.
2. Check for genuine NISSAN fuel filler cap design.

OK or NG

OK >> GO TO 2.
NG >> Replace with genuine NISSAN fuel filler cap.

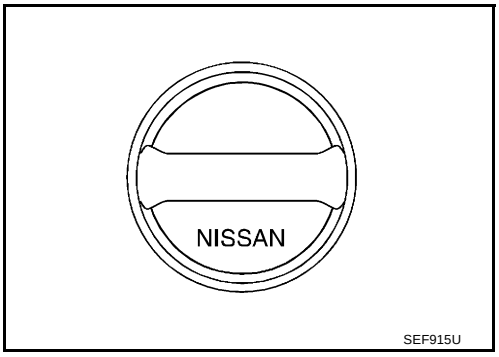

2. CHECK FUEL FILLER CAP INSTALLATION

Check that the cap is tightened properly by rotating the cap clockwise.

OK or NG

OK >> GO TO 3.
NG >> 1. Open fuel filler cap, then clean cap and fuel filler neck threads using air blower.
2. Retighten until ratcheting sound is heard.

3. CHECK FUEL FILLER CAP FUNCTION

Check for air releasing sound while opening the fuel filler cap.

OK or NG

OK >> GO TO 5.
NG >> GO TO 4.

4. CHECK FUEL TANK VACUUM RELIEF VALVE

Refer to EC-733, "FUEL TANK VACUUM RELIEF VALVE (BUILT INTO FUEL FULLER CAP)" .

OK or NG

OK >> GO TO 5.
NG >> Replace fuel filler cap with a genuine one.

5. CHECK EVAP PURGE LINE

Check EVAP purge line (pipe, rubber tube, fuel tank and EVAP canister) for cracks, improper connection or disconnection.
Refer to EC-731, "EVAPORATIVE EMISSION LINE DRAWING" .

OK or NG

OK >> GO TO 6.
NG >> Repair or reconnect the hose.

6. CLEAN EVAP PURGE LINE

Clean EVAP purge line (pipe and rubber tube) using air blower.

>> GO TO 7.

7. CHECK EVAP CANISTER VENT CONTROL VALVE

Check the following.

- EVAP canister vent control valve is installed properly.
  Refer to EC-734, "Removal and Installation" .
- EVAP canister vent control valve.
  Refer to EC-1081, "Component Inspection" .

OK or NG

OK >> GO TO 8.
NG >> Repair or replace EVAP canister vent control valve and O-ring.

8. INSTALL THE PRESSURE PUMP

To locate the EVAP leak, install EVAP service port adapter and pressure pump to EVAP service port securely.

NOTE:
Improper installation of the EVAP service port adapter to the EVAP service port may cause leaking.

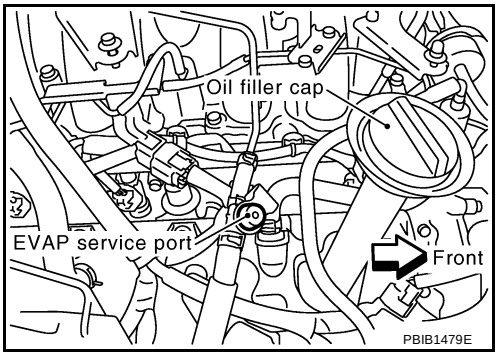

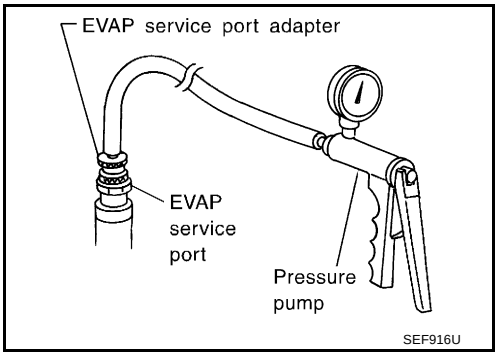

With CONSULT-II>>GO TO 9.
Without CONSULT-II>>GO TO 10.

9. CHECK FOR EVAP LEAK

With CONSULT-II

1. Turn ignition switch ON.
2. Select “EVAP SYSTEM CLOSE” of “WORK SUPPORT” mode with CONSULT-II.
3. Touch “START” and apply pressure into the EVAP line until the pressure indicator reaches the middle of the bar graph.

   NOTE:
   - **Do not use compressed air or a high pressure pump.**
   - **Do not exceed 4.12 kPa (0.042 kg/cm^2 , 0.6 psi) of pressure in the system.**

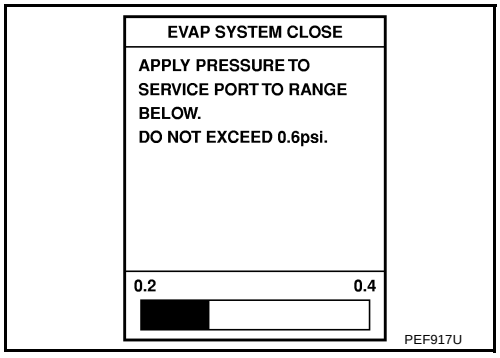

4. Using EVAP leak detector, locate the EVAP leak. For the leak detector, refer to the instruction manual for more details.
   Refer to EC-731, "EVAPORATIVE EMISSION LINE DRAWING"
   .

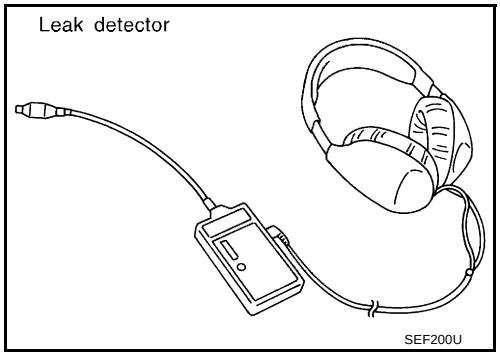

OK or NG

OK >> GO TO 11.
NG >> Repair or replace.

10. CHECK FOR EVAP LEAK

Without CONSULT-II

1. Turn ignition switch OFF.
2. Apply 12 volts DC to EVAP canister vent control valve. The valve will close. (Continue to apply 12 volts until the end of test.)

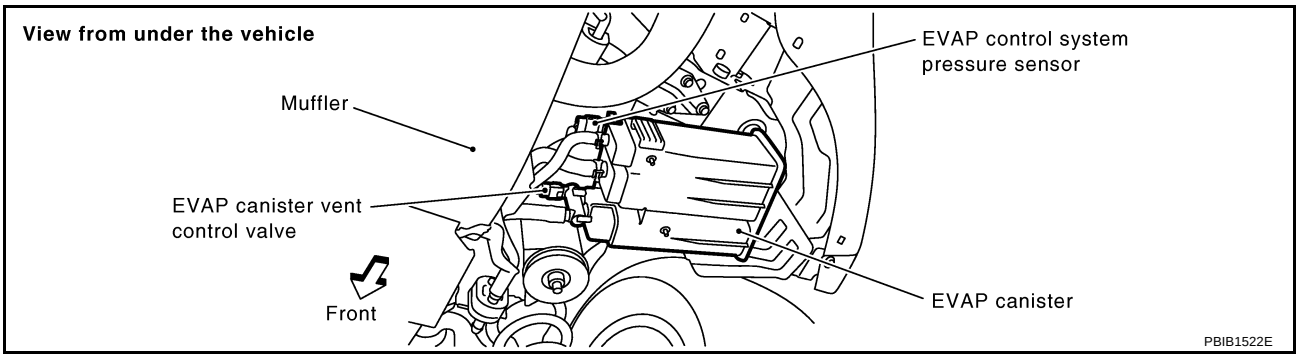

3. Pressurize the EVAP line using pressure pump with 1.3 to 2.7 kPa (10 to 20 mmHg, 0.39 to 0.79 inHg), then remove pump and EVAP service port adapter.

   NOTE:
   - Do not **use compressed air or a high pressure pump.**
   - **Do not exceed 4.12 kPa (0.042 kg/cm^2 , 0.6 psi) of pressure in the system.**
4. Using EVAP leak detector, locate the EVAP leak. For the leak detector, refer to the instruction manual for more details. Refer to EC-731, "EVAPORATIVE EMISSION LINE DRAWING" .

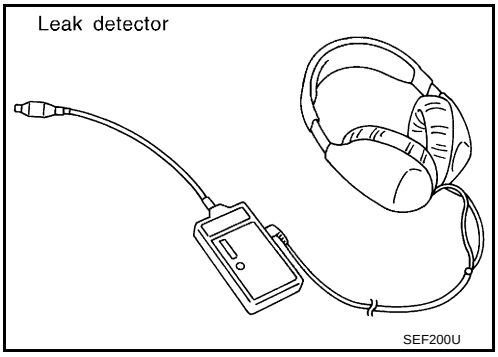

OK or NG

OK >> GO TO 12.
NG >> Repair or replace.

11. CHECK EVAP CANISTER PURGE VOLUME CONTROL SOLENOID VALVE OPERATION

With CONSULT-II

1. Disconnect vacuum hose to EVAP canister purge volume control solenoid valve at EVAP service port.
2. Start engine.
3. Perform “PURG VOL CONT/V” in “ACTIVE TEST” mode.
4. Touch “Qu” on CONSULT-II screen to increase “PURG VOL CONT/V” opening to 100%.
5. Check vacuum hose for vacuum when revving engine up to 2,000 rpm.

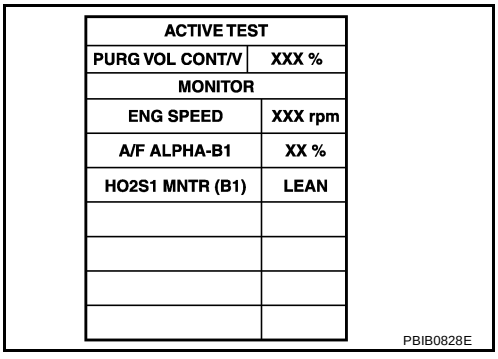

ACTIVE TEST	
PURG VOL CONT/V	XXX %
MONITOR	
ENG SPEED	XXX rpm
A/F ALPHA-B1	XX %
HO2S1 MNTR (B1)	LEAN

PBIB0828E

OK or NG

OK >> GO TO 14.
NG >> GO TO 13.

12. CHECK EVAP CANISTER PURGE VOLUME CONTROL SOLENOID VALVE OPERATION

Without CONSULT-II

1. Start engine and warm it up to normal operating temperature.
2. Stop engine.
3. Disconnect vacuum hose to EVAP canister purge volume control solenoid valve at EVAP service port.
4. Start engine and let it idle for at least 80 seconds.
5. Check vacuum hose for vacuum when revving engine up to 2,000 rpm.

Vacuum should exist.

OK or NG

OK >> GO TO 15.
NG >> GO TO 13.

13. CHECK VACUUM HOSE

Check vacuum hoses for clogging or disconnection. Refer to EC-810, "Vacuum Hose Drawing" .

OK or NG

OK (With CONSULT-II)>>GO TO 14.
OK (Without CONSULT-II)>>GO TO 15.
NG >> Repair or reconnect the hose.

14. CHECK EVAP CANISTER PURGE VOLUME CONTROL SOLENOID VALVE

With CONSULT-II

1. Start engine.
2. Perform “PURG VOL CONT/V” in “ACTIVE TEST” mode with CONSULT-II. Check that engine speed varies according to the valve opening.

OK or NG

OK >> GO TO 16.
NG >> GO TO 15.

ACTIVE TEST	
PURG VOL CONT/V	XXX %
MONITOR	
ENG SPEED	XXX rpm
A/F ALPHA-B1	XX %
HO2S1 MNTR (B1)	LEAN

PBIB0828E

15. CHECK EVAP CANISTER PURGE VOLUME CONTROL SOLENOID VALVE

Refer to EC-1074, "Component Inspection" .

OK or NG

OK >> GO TO 16.
NG >> Replace EVAP canister purge volume control solenoid valve.

16. CHECK FUEL TANK TEMPERATURE SENSOR

Refer to EC-1009, "Component Inspection" .

OK or NG

OK >> GO TO 17.
NG >> Replace fuel level sensor unit.

17. CHECK EVAP CONTROL SYSTEM PRESSURE SENSOR

Refer to EC-1091, "Component Inspection" .

OK or NG

OK >> GO TO 18.
NG >> Replace EVAP control system pressure sensor.

18. CHECK EVAP/ORVR LINE

Check EVAP/ORVR line between EVAP canister and fuel tank for clogging, kink, looseness and improper connection. For location, refer to EC-737, "ON BOARD REFUELING VAPOR RECOVERY (ORVR)" .

OK or NG

OK >> GO TO 19.
NG >> Repair or replace hoses and tubes.

19. CHECK RECIRCULATION LINE

Check recirculation line between filler neck tube and fuel tank for clogging, kink, cracks, looseness and improper connection.

OK or NG

OK >> GO TO 20.
NG >> Repair or replace hose, tube or filler neck tube.

20. CHECK REFUELING EVAP VAPOR CUT VALVE

Refer to EC-740, "REFUELING EVAP VAPOR CUT VALVE" .

OK or NG

OK >> GO TO 21.
NG >> Replace refueling EVAP vapor cut valve with fuel tank.

21. CHECK INTERMITTENT INCIDENT

Refer to EC-854, "TROUBLE DIAGNOSIS FOR INTERMITTENT INCIDENT" .

>> **INSPECTION END**

DTC P0456 EVAP CONTROL SYSTEM

PFP:14950

On Board Diagnosis Logic

ABS007P0

This diagnosis detects very small leaks in the EVAP line between fuel tank and EVAP canister purge volume control solenoid valve, using the intake manifold vacuum in the same way as conventional EVAP small leak diagnosis.
If ECM judges a leak which corresponds to a very small leak, the very small leak P0456 will be detected.
If ECM judges a leak equivalent to a small leak, EVAP small leak P0442 will be detected.
If ECM judges there are no leaks, the diagnosis will be OK.

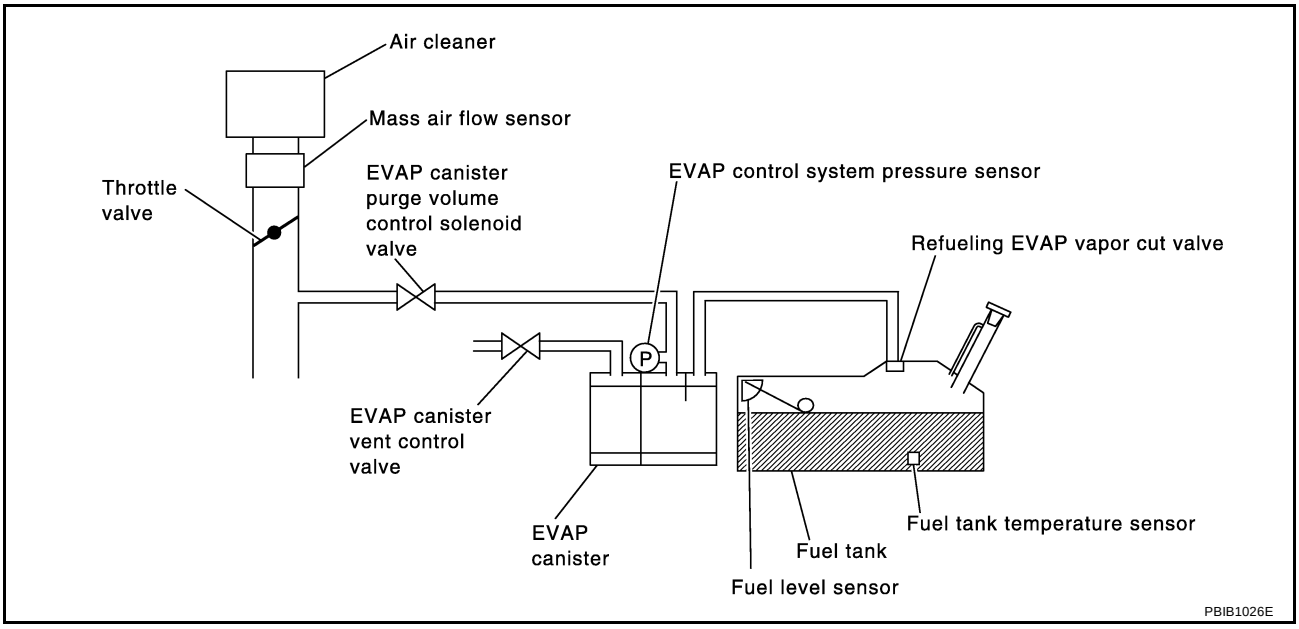

DTC No.	Trouble diagnosis name	DTC detecting condition	Possible cause
P0456 0456	Evaporative emission control system very small leak (negative pressure check)	● EVAP system has a very small leak. ● EVAP system does not operate properly.	● Incorrect fuel tank vacuum relief valve ● Incorrect fuel filler cap used ● Fuel filler cap remains open or fails to close. ● Foreign matter caught in fuel filler cap. ● Leak is in line between intake manifold and EVAP canister purge volume control solenoid valve. ● Foreign matter caught in EVAP canister vent control valve. ● EVAP canister or fuel tank leaks ● EVAP purge line (pipe and rubber tube) leaks ● EVAP purge line rubber tube bent ● Loose or disconnected rubber tube ● EVAP canister vent control valve and the circuit ● EVAP canister purge volume control solenoid valve and the circuit ● Fuel tank temperature sensor ● O-ring of EVAP canister vent control valve is missing or damaged ● EVAP canister is saturated with water ● EVAP control system pressure sensor ● Refueling EVAP vapor cut valve ● ORVR system leaks ● Fuel level sensor and the circuit ● Foreign matter caught in EVAP canister purge volume control solenoid valve

CAUTION:

- **Use only a genuine NISSAN fuel filler cap as a replacement. If an incorrect fuel filler cap is used, the MIL may come on.**
- **If the fuel filler cap is not tightened properly, the MIL may come on.**
- **Use only a genuine NISSAN rubber tube as a replacement.**

DTC Confirmation Procedure

ABS007P1

NOTE:

- **If DTC P0456 is displayed with P0442, first perform trouble diagnosis for DTC P0456.**
- **After repair, make sure that the hoses and clips are installed properly.**
- If DTC Confirmation Procedure has been previously conducted, always turn ignition switch OFF and wait at least 10 seconds before conducting the next test.

TESTING CONDITION:

- **Open engine hood before conducting following procedure.**
- **If any of following conditions are met just before the DTC confirmation procedure, leave the vehicle for more than 1 hour.**
  - **Fuel filler cap is removed.**
  - **Fuel is refilled or drained.**
  - **EVAP component parts is/are removed.**
- **Before performing the following procedure, confirm that battery voltage is more than 11V at idle.**

WITH CONSULT-II

1. Turn ignition switch ON and select “DATA MONITOR” mode with CONSULT-II.
2. Make sure the following conditions are met.
   FUEL LEVEL SE: 0.25 - 1.4V
   COOLAN TEMP/S: 0 - 32°C (32 - 90°F)
   FUEL T/TMP SE: 0 - 35°C (32 - 95°F)
   INT A/TEMP SE: More than 0°C (32°F)
   If NG, turn ignition switch OFF and leave the vehicle in a cool place (soak the vehicle) or refilling/draining fuel until the output voltage condition of the “FUEL LEVEL SE” meets within the range above and leave the vehicle for more than 1 hour. Then start from step 1).
3. Turn ignition switch OFF and wait at least 10 seconds.
4. Turn ignition switch ON.
5. Select “EVAP V/S LEAK P0456/P1456” of “EVAPORATIVE SYSTEM” in “DTC WORK SUPPORT” mode with CONSULT-II.
   Follow the instruction displayed.

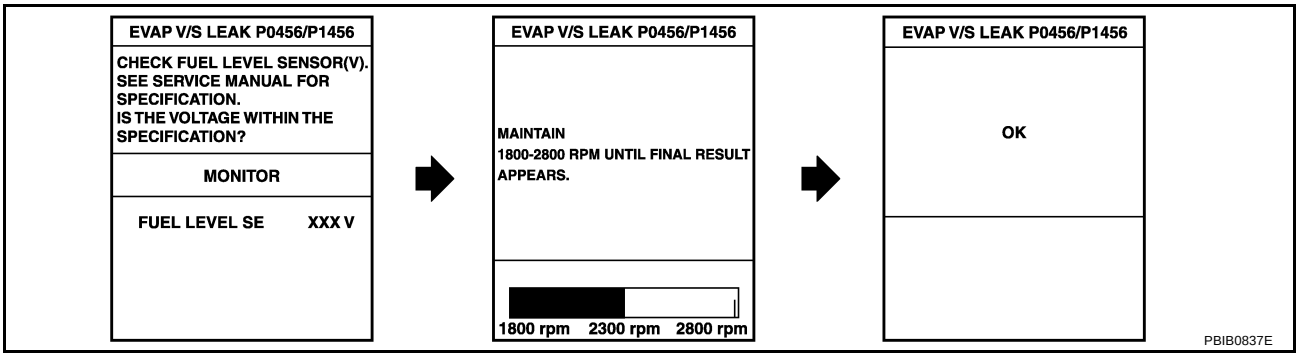

6. Make sure that “OK” is displayed.
   If “NG” is displayed, refer to EC-1111, "Diagnostic Procedure" .

   NOTE:
   - **If the engine speed cannot be maintained within the range displayed on CONSULT-II screen, go to EC-769, "Basic Inspection" .**
   - **Make sure that EVAP hoses are connected to EVAP canister purge volume control solenoid valve properly.**

Overall Function Check

ABS007P2

WITH GST

Use this procedure to check the overall function of the EVAP very small leak function. During this check, a 1st trip DTC might not be confirmed.

CAUTION:

- **Do not use compressed air, doing so may damage the EVAP system.**
- **Do not start engine.**
- **Do not exceeded 4.12 kPa (0.042 kg/cm^2 , 0.6 psi).**

1. Attach the EVAP service port adapter securely to the EVAP service port.

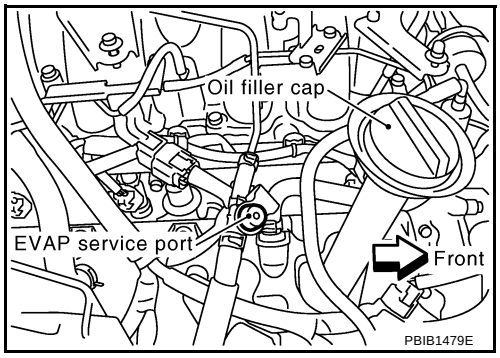

2. Set the pressure pump and a hose.
3. Also set a vacuum gauge via 3-way connector and a hose.
4. Turn ignition switch ON.
5. Connect GST and select “Service $08”.
6. Using “Service $08” control the EVAP canister vent control valve (close).
7. Apply pressure and make sure the following conditions are satisfied.
   Pressure to be applied: 2.7 kPa (20 mmHg, 0.79 inHg)
   Time to be waited after the pressure drawn in to the EVAP system and the pressure to be dropped: 60 seconds and the pressure should not be dropped more than 0.4 kPa (3 mmHg, 0.12 inHg).
   If NG, go to EC-1111, "Diagnostic Procedure" .
   If OK, go to next step.

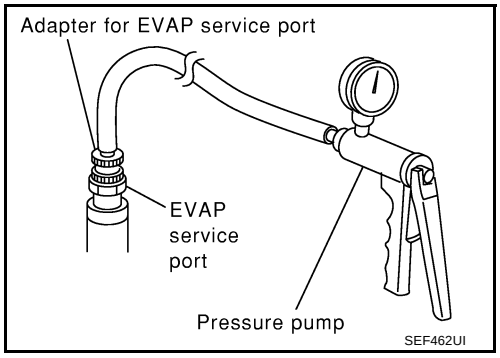

8. Disconnect GST.
9. Start engine and warm it up to normal operating temperature.
10. Turn ignition switch OFF and wait at least 10 seconds.
11. Restart engine and let it idle for 90 seconds.
12. Keep engine speed at 2,000 rpm for 30 seconds.
13. Turn ignition switch OFF.

    NOTE:
    For more information, refer to GST instruction manual.

Diagnostic Procedure

ABS007P3

1. CHECK FUEL FILLER CAP DESIGN

1. Turn ignition switch OFF.
2. Check for genuine NISSAN fuel filler cap design.

OK or NG

OK >> GO TO 2.
NG >> Replace with genuine NISSAN fuel filler cap.

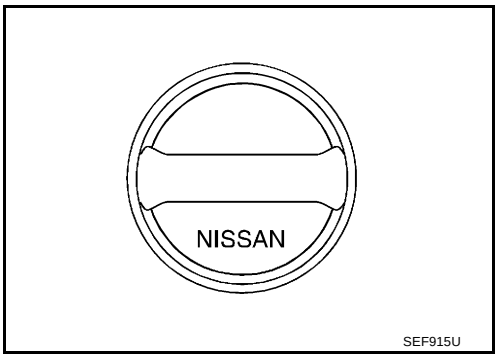

2. CHECK FUEL FILLER CAP INSTALLATION

Check that the cap is tightened properly by rotating the cap clockwise.

OK or NG

OK >> GO TO 3.
NG >> 1. Open fuel filler cap, then clean cap and fuel filler neck threads using air blower.
2. Retighten until ratcheting sound is heard.

3. CHECK FUEL FILLER CAP FUNCTION

Check for air releasing sound while opening the fuel filler cap.

OK or NG

OK >> GO TO 5.
NG >> GO TO 4.

4. CHECK FUEL TANK VACUUM RELIEF VALVE

Refer to EC-733, "FUEL TANK VACUUM RELIEF VALVE (BUILT INTO FUEL FULLER CAP)" .

OK or NG

OK >> GO TO 5.
NG >> Replace fuel filler cap with a genuine one.

5. INSTALL THE PRESSURE PUMP

To locate the EVAP leak, install EVAP service port adapter and pressure pump to EVAP service port securely.

NOTE:
Improper installation of the EVAP service port adapter to the EVAP service port may cause leaking.

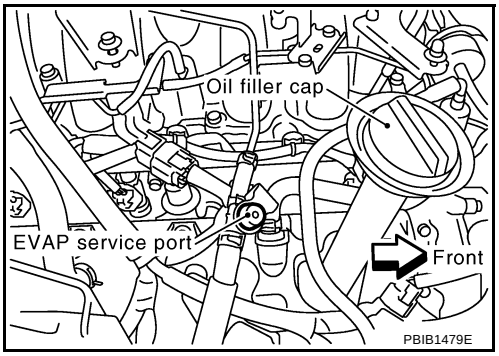

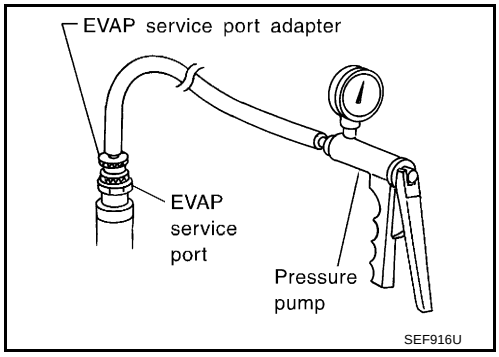

With CONSULT-II>>GO TO 6.
Without CONSULT-II>>GO TO 7.

6. CHECK FOR EVAP LEAK

With CONSULT-II

1. Turn ignition switch ON.
2. Select “EVAP SYSTEM CLOSE” of “WORK SUPPORT” mode with CONSULT-II.
3. Touch “START” and apply pressure into the EVAP line until the pressure indicator reaches the middle of the bar graph.

   NOTE:
   - **Do not use compressed air or a high pressure pump.**
   - **Do not exceed 4.12 kPa (0.042 kg/cm^2 , 0.6 psi) of pressure in the system.**

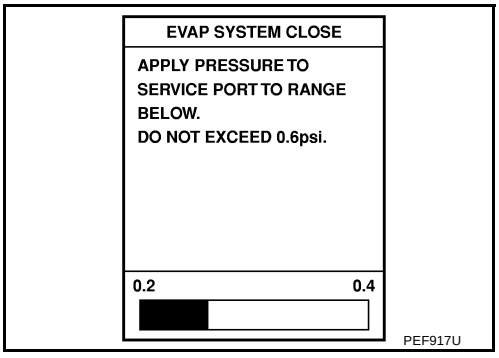

4. Using EVAP leak detector, locate the EVAP leak. For the leak detector, refer to the instruction manual for more details.
   Refer to EC-731, "EVAPORATIVE EMISSION LINE DRAWING"
   .

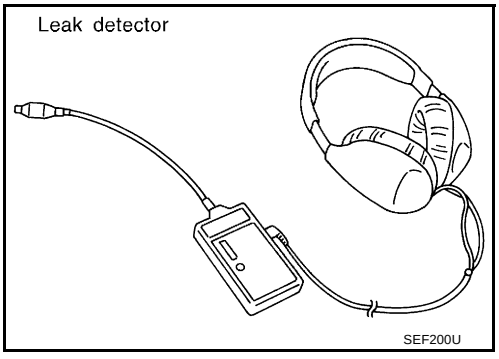

OK or NG

OK >> GO TO 8.
NG >> Repair or replace.

7. CHECK FOR EVAP LEAK

Without CONSULT-II

1. Turn ignition switch OFF.
2. Apply 12 volts DC to EVAP canister vent control valve. The valve will close. (Continue to apply 12 volts until the end of test.)

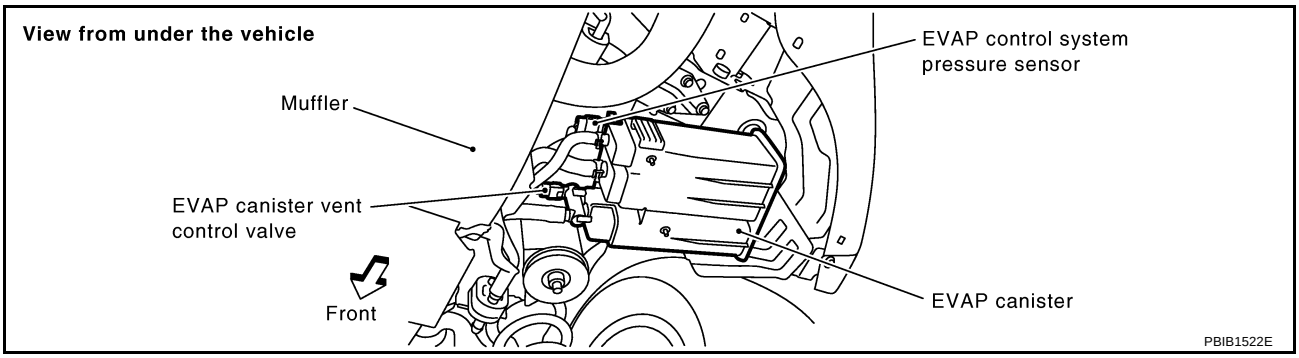

3. Pressurize the EVAP line using pressure pump with 1.3 to 2.7 kPa (10 to 20 mmHg, 0.39 to 0.79 inHg), then remove pump and EVAP service port adapter.

   NOTE:
   - **Do not use compressed air or a high pressure pump.**
   - **Do not exceed 4.12 kPa (0.042 kg/cm^2 , 0.6 psi) of pressure in the system.**
4. Using EVAP leak detector, locate the EVAP leak. For the leak detector, refer to the instruction manual for more details. Refer to EC-731, "EVAPORATIVE EMISSION LINE DRAWING" .

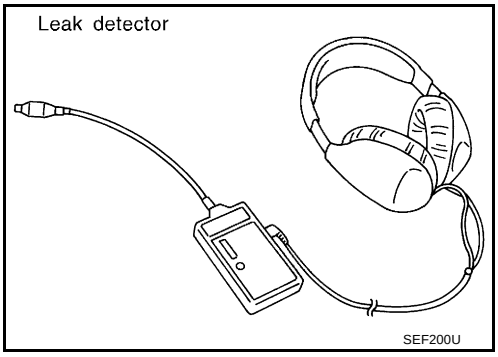

OK or NG

OK >> GO TO 8.
NG >> Repair or replace.

8. CHECK EVAP CANISTER VENT CONTROL VALVE

Check the following.

- EVAP canister vent control valve is installed properly.
  Refer to EC-734, "Removal and Installation" .
- EVAP canister vent control valve.
  Refer to EC-1081, "Component Inspection" .

OK or NG

OK >> GO TO 9.
NG >> Repair or replace EVAP canister vent control valve and O-ring.

9. CHECK IF EVAP CANISTER SATURATED WITH WATER

1. Remove EVAP canister with EVAP canister vent control valve and EVAP control system pressure sensor attached.
2. Does water drain from the EVAP canister?

Yes or No

Yes >> GO TO 10.
No (With CONSULT-II)>>GO TO 12.
No (Without CONSULT-II)>>GO TO 13.

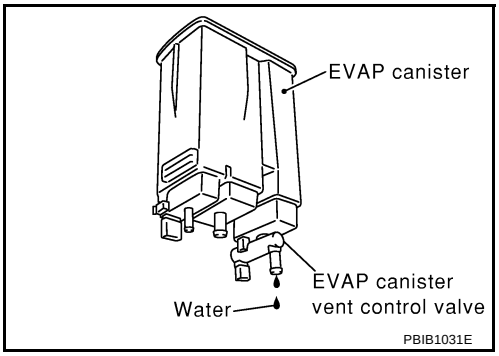

10. CHECK EVAP CANISTER

Weigh the EVAP canister with the EVAP canister vent control valve and EVAP control system pressure sensor attached.

The weight should be less than 2.1 kg (4.6 lb).

OK or NG

OK (With CONSULT-II)>>GO TO 12.
OK (Without CONSULT-II)>>GO TO 13.
NG >> GO TO 11.

11. DETECT MALFUNCTIONING PART

Check the following.

- EVAP canister for damage
- EVAP hose between EVAP canister and vehicle frame for clogging or poor connection

>> Repair hose or replace EVAP canister.

12. CHECK EVAP CANISTER PURGE VOLUME CONTROL SOLENOID VALVE OPERATION

With CONSULT-II

1. Disconnect vacuum hose to EVAP canister purge volume control solenoid valve at EVAP service port.
2. Start engine.
3. Perform “PURG VOL CONT/V” in “ACTIVE TEST” mode.
4. Touch “Qu” on CONSULT-II screen to increase “PURG VOL CONT/V” opening to 100%.
5. Check vacuum hose for vacuum when revving engine up to 2,000 rpm.

OK or NG

OK >> GO TO 15.
NG >> GO TO 14.

ACTIVE TEST	
PURG VOL CONT/V	0 %
MONITOR	
ENG SPEED	XXX rpm
HO2S1 MNTR (B1)	LEAN
HO2S1 MNTR (B2)	LEAN
A/F ALPHA-B1	XXX %
A/F ALPHA-B2	XXX %

PBIB0147E

13. CHECK EVAP CANISTER PURGE VOLUME CONTROL SOLENOID VALVE OPERATION

Without CONSULT-II

1. Start engine and warm it up to normal operating temperature.
2. Stop engine.
3. Disconnect vacuum hose to EVAP canister purge volume control solenoid valve at EVAP service port.
4. Start engine and let it idle for at least 80 seconds.
5. Check vacuum hose for vacuum when revving engine up to 2,000 rpm.

Vacuum should exist.

OK or NG

OK >> GO TO 16.
NG >> GO TO 14.

14. CHECK VACUUM HOSE

Check vacuum hoses for clogging or disconnection. Refer to EC-810, "Vacuum Hose Drawing" .

OK or NG

OK >> GO TO 15.
NG >> Repair or reconnect the hose.

15. CHECK EVAP CANISTER PURGE VOLUME CONTROL SOLENOID VALVE

Refer to EC-1074, "Component Inspection" .

OK or NG

OK >> GO TO 16.
NG >> Replace EVAP canister purge volume control solenoid valve.

16. CHECK FUEL TANK TEMPERATURE SENSOR

Refer to EC-1009, "Component Inspection" .

OK or NG

OK >> GO TO 17.
NG >> Replace fuel level sensor unit.

17. CHECK EVAP CONTROL SYSTEM PRESSURE SENSOR

Refer to EC-1091, "Component Inspection" .

OK or NG

OK >> GO TO 18.
NG >> Replace EVAP control system pressure sensor.

18. CHECK EVAP PURGE LINE

Check EVAP purge line (pipe, rubber tube, fuel tank and EVAP canister) for cracks or improper connection. Refer to EC-731, "EVAPORATIVE EMISSION LINE DRAWING" .

OK or NG

OK >> GO TO 19.
NG >> Repair or reconnect the hose.

19. CLEAN EVAP PURGE LINE

Clean EVAP purge line (pipe and rubber tube) using air blower.

>> GO TO 20.

20. CHECK EVAP/ORVR LINE

Check EVAP/ORVR line between EVAP canister and fuel tank for clogging, kink, looseness and improper connection. For location, refer to EC-737, "ON BOARD REFUELING VAPOR RECOVERY (ORVR)" .

OK or NG

OK >> GO TO 21.
NG >> Repair or replace hoses and tubes.

21. CHECK RECIRCULATION LINE

Check recirculation line between filler neck tube and fuel tank for clogging, kink, cracks, looseness and improper connection.

OK or NG

OK >> GO TO 22.
NG >> Repair or replace hose, tube or filler neck tube.

22. CHECK REFUELING EVAP VAPOR CUT VALVE

Refer to EC-740, "Component Inspection" .

OK or NG

OK >> GO TO 23.
NG >> Replace refueling EVAP vapor cut valve with fuel tank.

23. CHECK FUEL LEVEL SENSOR

Refer to DI-25, "CHECK FUEL LEVEL SENSOR UNIT" .

OK or NG

OK >> GO TO 24.
NG >> Replace fuel level sensor unit.

24. CHECK INTERMITTENT INCIDENT

Refer to EC-854, "TROUBLE DIAGNOSIS FOR INTERMITTENT INCIDENT" .

>> **INSPECTION END**

DTC P0460 FUEL LEVEL SENSOR

PFP:25060

Component Description

ABS007P4

The fuel level sensor is mounted in the fuel level sensor unit. The sensor detects a fuel level in the fuel tank and transmits a signal to the “unified meter and A/C amp.”. The “unified meter and A/C amp.” sends the fuel level sensor signal to the ECM through CAN communication line.
It consists of two parts, one is mechanical float and the other is variable resistor. Fuel level sensor output voltage changes depending on the movement of the fuel mechanical float.

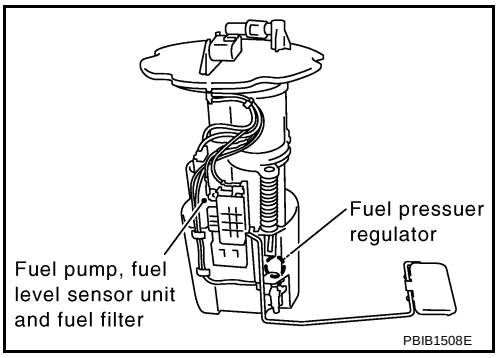

On Board Diagnosis Logic

ABS007P5

NOTE:
If DTC P0460 is displayed with DTC U1000 or U1001, first perform the trouble diagnosis for DTC U1000, U1001. Refer to EC-862 .
When the vehicle is parked, naturally the fuel level in the fuel tank is stable. It means that output signal of the fuel level sensor does not change. If ECM senses sloshing signal from the sensor, fuel level sensor malfunction is detected.

DTC No.	Trouble diagnosis name	DTC detecting condition	Possible cause
P0460 0460	Fuel level sensor circuit noise	Even though the vehicle is parked, a signal being varied is sent from the fuel level sensor to ECM.	● Harness or connectors (The CAN communication line is open or shorted) ● Harness or connectors (The sensor circuit is open or shorted) ● Unified meter and A/C amp. ● Fuel level sensor

DTC Confirmation Procedure

ABS007P6

NOTE:
If DTC Confirmation Procedure has been previously conducted, always turn ignition switch OFF and wait at least 10 seconds before conducting the next test.

WITH CONSULT-II

1. Turn ignition switch ON.
2. Select “DATA MONITOR” mode with CONSULT-II.
3. Start engine and wait maximum of 2 consecutive minutes.
4. If 1st trip DTC is detected, go to EC-1118, "Diagnostic Procedure" .

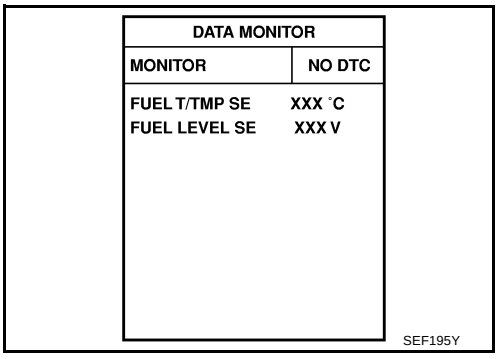

WITH GST

Follow the procedure “WITH CONSULT-II” above.

Diagnostic Procedure

ABS007P7

1. CHECK DTC WITH “UNIFIED METER AND A/C AMP.”

Refer to DI-32, "SELF-DIAGNOSTIC RESULTS" .

OK or NG

OK >> GO TO 2.
NG >> Go to DI-22, "Fuel Level Sensor Signal Inspection" .

2. CHECK INTERMITTENT INCIDENT

Refer to EC-854, "TROUBLE DIAGNOSIS FOR INTERMITTENT INCIDENT" .

>> **INSPECTION END**

Removal and Installation

ABS007P8

FUEL LEVEL SENSOR

Refer toFL-4, "FUEL LEVEL SENSOR UNIT, FUEL FILTER AND FUEL PUMP ASSEMBLY"

DTC P0461 FUEL LEVEL SENSOR

PFP:25060

Component Description

ABS007P9

The fuel level sensor is mounted in the fuel level sensor unit. The sensor detects a fuel level in the fuel tank and transmits a signal to the “unified meter and A/C amp.”. The “unified meter and A/C amp.” sends the fuel level sensor signal to the ECM through CAN communication line.
It consists of two parts, one is mechanical float and the other is variable resistor. Fuel level sensor output voltage changes depending on the movement of the fuel mechanical float.

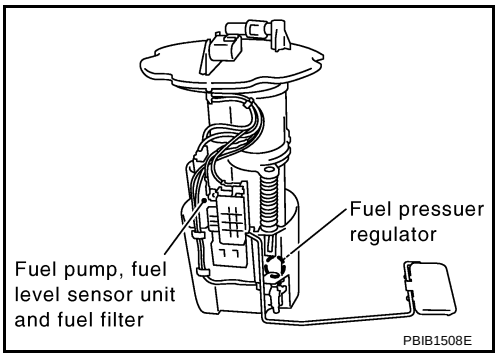

On Board Diagnosis Logic

ABS007PA

NOTE:
If DTC P0461 is displayed with DTC U1000 or U1001, first perform the trouble diagnosis for DTC U1000, U1001. Refer to EC-862 .
Driving long distances naturally affect fuel gauge level.
This diagnosis detects the fuel gauge malfunction of the gauge not moving even after a long distance has been driven.

DTC No.	Trouble diagnosis name	DTC detecting condition	Possible cause
P0461 0461	Fuel level sensor circuit range/performance	The output signal of the fuel level sensor does not change within the specified range even though the vehicle has been driven a long distance.	● Harness or connectors (The CAN communication line is open or shorted) ● Harness or connectors (The sensor circuit is open or shorted) ● Unified meter and A/C amp. ● Fuel level sensor

Overall Function Check

ABS007PB

Use this procedure to check the overall function of the fuel level sensor function. During this check, a 1st trip DTC might not be confirmed.

WARNING:
When performing following procedure, be sure to observe the handling of the fuel. Refer to FL-10, "FUEL TANK" .
TESTING CONDITION:
Before starting overall function check, preparation of draining fuel and refilling fuel is required.

WITH CONSULT-II

NOTE:
Start from step 10, if it is possible to confirm that the fuel cannot be drained by 30 ℓ (7-7/8 US gal, 6-5/8 Imp gal) in advance.

1. Prepare a fuel container and a spare hose.
2. Release fuel pressure from fuel line, refer to EC-789, "FUEL PRESSURE RELEASE" .
3. Remove the fuel feed hose on the fuel level sensor unit.
4. Connect a spare fuel hose where the fuel feed hose was removed.
5. Turn ignition switch OFF and wait at least 10 seconds then turn ON.

6. Select “FUEL LEVEL SE” in “DATA MONITOR” mode with CONSULT-II.
7. Check “FUEL LEVEL SE” output voltage and note it.
8. Select “FUEL PUMP” in “ACTIVE TEST” mode with CONSULT-II.
9. Touch “ON” and drain fuel approximately 30 ℓ (7-7/8 US gal, 6-5/8 Imp gal) and stop it.
10. Check “FUEL LEVEL SE” output voltage and note it.
11. Fill fuel into the fuel tank for 30 ℓ (7-7/8 US gal, 6-5/8 Imp gal).
12. Check “FUEL LEVEL SE” output voltage and note it.
13. Confirm whether the voltage changes more than 0.03V during step 7 to 10 and 10 to 12.
    If NG, go to EC-1120, "Diagnostic Procedure" .

DATA MONITOR	
MONITOR	NO DTC
FUEL T/TMP SE	XXX °C
FUEL LEVEL SE	XXX V

SEF195Y

WITH GST

NOTE:
Start from step 8, if it is possible to confirm that the fuel cannot be drained by 30 ℓ (7-7/8 US gal, 6-5/8 Imp gal) in advance.

1. Prepare a fuel container and a spare hose.
2. Release fuel pressure from fuel line. Refer to EC-789, "FUEL PRESSURE RELEASE" .
3. Remove the fuel feed hose on the fuel level sensor unit.
4. Connect a spare fuel hose where the fuel feed hose was removed.
5. Turn ignition switch ON.
6. Drain fuel by 30 ℓ (7-7/8 US gal, 6-5/8 Imp gal) from the fuel tank using proper equipment.
7. Confirm that the fuel gauge indication varies.
8. Fill fuel into the fuel tank for 30 ℓ (7-7/8 US gal, 6-5/8 Imp gal).
9. Confirm that the fuel gauge indication varies.
10. If NG, go to EC-1120, "Diagnostic Procedure" .

Diagnostic Procedure

ABS007PC

1. CHECK DTC WITH “UNIFIED METER AND A/C AMP.”

Refer to DI-32, "SELF-DIAGNOSTIC RESULTS" .

OK or NG

OK >> GO TO 2.
NG >> Go to DI-22, "Fuel Level Sensor Signal Inspection" .

2. CHECK INTERMITTENT INCIDENT

Refer to EC-854, "TROUBLE DIAGNOSIS FOR INTERMITTENT INCIDENT" .

>> **INSPECTION END**

Removal and Installation

ABS007PD

FUEL LEVEL SENSOR

Refer to FL-4, "FUEL LEVEL SENSOR UNIT, FUEL FILTER AND FUEL PUMP ASSEMBLY" .

DTC P0462, P0463 FUEL LEVEL SENSOR CIRCUIT

PFP:25060

Component Description

ABS007PE

The fuel level sensor is mounted in the fuel level sensor unit. The sensor detects a fuel level in the fuel tank and transmits a signal to the “unified meter and A/C amp.”. The “unified meter and A/C amp.” sends the fuel level sensor signal to the ECM through CAN communication line.
It consists of two parts, one is mechanical float and the other is variable resistor. Fuel level sensor output voltage changes depending on the movement of the fuel mechanical float.

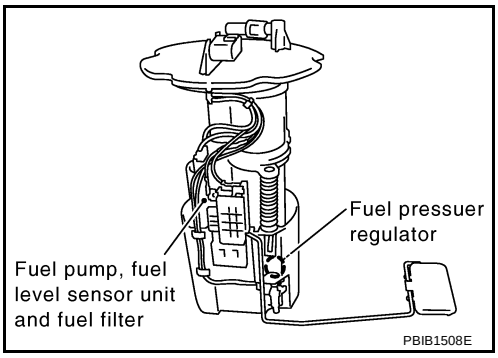

On Board Diagnosis Logic

ABS007PF

NOTE:
If DTC P0462 or P0463 is displayed with DTC U1000 or U1001, first perform the trouble diagnosis for DTC U1000, U1001. Refer to EC-862 .
This diagnosis indicates the former, to detect open or short circuit malfunction.

DTC No.	Trouble diagnosis name	DTC detecting condition	Possible cause
P0462 0462	Fuel level sensor circuit low input	An excessively low voltage from the sensor is sent to ECM.	● Harness or connectors (The CAN communication line is open or shorted) ● Harness or connectors (The sensor circuit is open or shorted) ● Unified meter and A/C amp. ● Fuel level sensor
P0463 0463	Fuel level sensor circuit high input	An excessively high voltage from the sensor is sent to ECM.	

DTC Confirmation Procedure

ABS007PG

NOTE:
If DTC Confirmation Procedure has been previously conducted, always turn ignition switch OFF and wait at least 10 seconds before conducting the next test.
TESTING CONDITION:
Before performing the following procedure, confirm that battery voltage is more than 11V at ignition switch ON.

WITH CONSULT-II

1. Turn ignition switch ON.
2. Select “DATA MONITOR” mode with CONSULT-II.
3. Wait at least 5 seconds.
4. If 1st trip DTC is detected, go to EC-1122, "Diagnostic Procedure" .

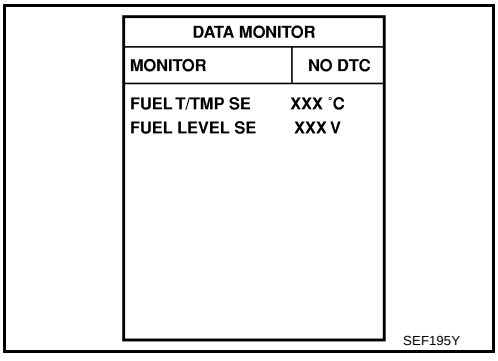

WITH GST

Follow the procedure “WITH CONSULT-II” above.

Diagnostic Procedure

ABS007PH

1. CHECK DTC WITH “UNIFIED METER AND A/C AMP.”

Refer to DI-32, "SELF-DIAGNOSTIC RESULTS" .

OK or NG

OK >> GO TO 2.
NG >> Go to DI-22, "Fuel Level Sensor Signal Inspection" .

2. CHECK INTERMITTENT INCIDENT

Refer to EC-854, "TROUBLE DIAGNOSIS FOR INTERMITTENT INCIDENT" .

>> **INSPECTION END**

Removal and Installation

ABS007PI

FUEL LEVEL SENSOR

Refer to FL-4, "FUEL LEVEL SENSOR UNIT, FUEL FILTER AND FUEL PUMP ASSEMBLY" .

DTC P0500 VSS

PFP:32702

Description

ABS007PJ

NOTE:
If DTC P0500 is displayed with DTC U1000 or U1001, first perform the trouble diagnosis for DTC U1000, U1001. Refer to EC-862, "DTC U1000, U1001 CAN COMMUNICATION LINE" .
The vehicle speed signal is sent to the “unified meter and A/C amp.” from the “ABS actuator and electric unit (control unit)” by CAN communication line. The “unified meter and A/C amp.” then sends a signal to the ECM by CAN communication line.

On Board Diagnosis Logic

ABS007PK

DTC No.	Trouble diagnosis name	DTC detecting condition	Possible cause
P0500 0500	Vehicle speed sensor	The almost 0 km/h (0 MPH) signal from vehicle speed sensor is sent to ECM even when vehicle is being driven.	● Harness or connectors (The CAN communication line is open or shorted) ● Harness or connectors (The vehicle speed signal circuit is open or shorted) ● Wheel sensor ● Unified meter and A/C amp. ● ABS actuator and electric unit (control unit)

DTC Confirmation Procedure

ABS007PL

CAUTION:
Always drive vehicle at a safe speed.

NOTE:
If DTC Confirmation Procedure has been previously conducted, always turn ignition switch OFF and wait at least 10 seconds before conducting the next test.

TESTING CONDITION:
Steps 1 and 2 may be conducted with the drive wheels lifted in the shop or by driving the vehicle. If a road test is expected to be easier, it is unnecessary to lift the vehicle.

WITH CONSULT-II

1. Start engine (VDC switch OFF).
2. Read “VHCL SPEED SE” in “DATA MONITOR” mode with CONSULT-II. The vehicle speed on CONSULT-II should exceed 10 km/h (6 MPH) when rotating wheels with suitable gear position.
   If NG, go to EC-1124, "Diagnostic Procedure" .
   If OK, go to following step.
3. Select “DATA MONITOR” mode with CONSULT-II.
4. Warm engine up to normal operating temperature.
5. Maintain the following conditions for at least 60 consecutive seconds.

ENG SPEED	1,600 - 6,000 rpm
COOLAN TEMP/S	More than 70°C (158°F)
B/FUEL SCHDL	4.5 - 31.8 msec
Selector lever	Except P or N position
PW/ST SIGNAL	OFF

6. If 1st trip DTC is detected, go to EC-1124, "Diagnostic Procedure" .

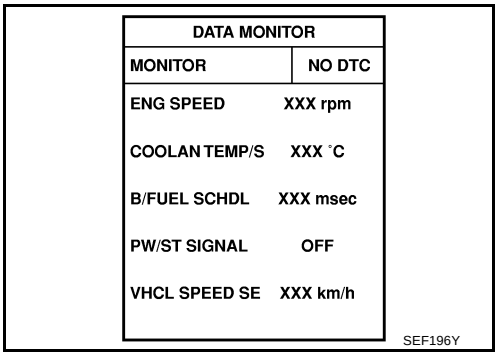

Overall Function Check

ABS007PM

Use this procedure to check the overall function of the vehicle speed sensor circuit. During this check, a 1st trip DTC might not be confirmed.

WITH GST

1. Lift up drive wheels.
2. Start engine.
3. Read vehicle speed sensor signal in “Service $01” with GST.
   The vehicle speed sensor on GST should be able to exceed 10 km/h (6 MPH) when rotating wheels with suitable gear position.
4. If NG, go to EC-1124, "Diagnostic Procedure" .

Diagnostic Procedure

ABS007PN

1. CHECK DTC WITH “ABS ACTUATOR AND ELECTRIC UNIT (CONTROL UNIT)”

Refer to BRC-12, "TROUBLE DIAGNOSIS" .

OK or NG

OK >> GO TO 2.
NG >> Repair or replace.

2. CHECK DTC WITH “UNIFIED METER AND A/C AMP.”

Refer to DI-5, "COMBINATION METERS" .

>> **INSPECTION END**

DTC P0506 ISC SYSTEM

PFP:23781

Description

ABS007PO

NOTE:
If DTC P0506 is displayed with other DTC, first perform the trouble diagnosis for the other DTC.
The ECM controls the engine idle speed to a specified level through the fine adjustment of the air, which is let into the intake manifold, by operating the electric throttle control actuator. The operating of the throttle valve is varied to allow for optimum control of the engine idling speed. The crankshaft position sensor (POS) detects the actual engine speed and sends a signal to the ECM.
The ECM controls the electric throttle control actuator so that the engine speed coincides with the target value memorized in the ECM. The target engine speed is the lowest speed at which the engine can operate steadily. The optimum value stored in the ECM is determined by taking into consideration various engine conditions, such as during warming up, deceleration, and engine load (air conditioner, power steering and cooling fan operation, etc.).

On Board Diagnosis Logic

ABS007PP

DTC No.	Trouble diagnosis name	DTC detecting condition	Possible cause
P0506 0506	Idle speed control system RPM lower than expected	The idle speed is less than the target idle speed by 100 rpm or more.	● Electric throttle control actuator ● Intake air leak

DTC Confirmation Procedure

ABS007PQ

NOTE:
- If DTC Confirmation Procedure has been previously conducted, always turn ignition switch OFF and wait at least 10 seconds before conducting the next test.
- **If the target idle speed is out of the specified value, perform EC-787, "Idle Air Volume Learning" , before conducting DTC Confirmation Procedure. For the target idle speed, refer to the EC-1395, "SERVICE DATA AND SPECIFICATIONS (SDS)" .**

TESTING CONDITION:
- **Before performing the following procedure, confirm that battery voltage is more than 11V at idle.**
- **Always perform the test at a temperature above –10°C (14°F).**

WITH CONSULT-II

1. Open engine hood.
2. Start engine and warm it up to normal operating temperature.
3. Turn ignition switch OFF and wait at least 10 seconds.
4. Turn ignition switch ON again and select “DATA MONITOR” mode with CONSULT-II.
5. Start engine and run it for at least 1 minute at idle speed.
6. If 1st trip DTC is detected, go to EC-1126, "Diagnostic Procedure" .

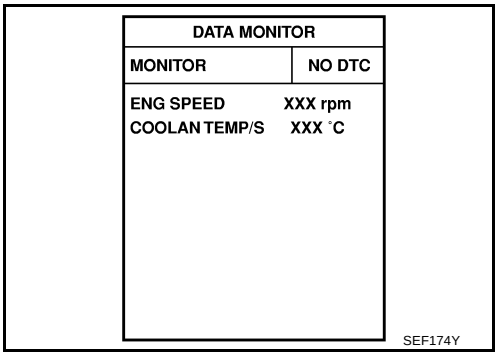

WITH GST

Follow the procedure “WITH CONSULT-II” above.

Diagnostic Procedure

ABS007PR

1. CHECK INTAKE AIR LEAK

1. Start engine and let it idle.
2. Listen for an intake air leak after the mass air flow sensor.

OK or NG

OK >> GO TO 2.
NG >> Discover air leak location and repair.

2. REPLACE ECM

1. Stop engine.
2. Replace ECM.
3. Perform initialization of IVIS (NATS) system and registration of all IVIS (NATS) ignition key IDs. Refer to BL-215, "ECM Re-Communicating Function" .
4. Perform EC-786, "VIN Registration" .
5. Perform EC-786, "Accelerator Pedal Released Position Learning" .
6. Perform EC-786, "Throttle Valve Closed Position Learning" .
7. Perform EC-787, "Idle Air Volume Learning" .

>> **INSPECTION END**

DTC P0507 ISC SYSTEM

PFP:23781

Description

ABS007PS

NOTE:
If DTC P0507 is displayed with other DTC, first perform the trouble diagnosis for the other DTC.
The ECM controls the engine idle speed to a specified level through the fine adjustment of the air, which is let into the intake manifold, by operating the electric throttle control actuator. The operating of the throttle valve is varied to allow for optimum control of the engine idling speed. The crankshaft position sensor (POS) detects the actual engine speed and sends a signal to the ECM.
The ECM controls the electric throttle control actuator so that the engine speed coincides with the target value memorized in the ECM. The target engine speed is the lowest speed at which the engine can operate steadily. The optimum value stored in the ECM is determined by taking into consideration various engine conditions, such as during warming up, deceleration, and engine load (air conditioner, power steering and cooling fan operation, etc.).

On Board Diagnosis Logic

ABS007PT

DTC No.	Trouble diagnosis name	DTC detecting condition	Possible cause
P0507 0507	Idle speed control system RPM higher than expected	The idle speed is more than the target idle speed by 200 rpm or more.	● Electric throttle control actuator ● Intake air leak ● PCV system

DTC Confirmation Procedure

ABS007PU

NOTE:
- If DTC Confirmation Procedure has been previously conducted, always turn ignition switch OFF and wait at least 10 seconds before conducting the next test.
- **If the target idle speed is out of the specified value, perform EC-787, "Idle Air Volume Learning" , before conducting DTC Confirmation Procedure. For the target idle speed, refer to the EC-1395, "SERVICE DATA AND SPECIFICATIONS (SDS)" .**

TESTING CONDITION:
- **Before performing the following procedure, confirm that battery voltage is more than 11V at idle.**
- **Always perform the test at a temperature above –10°C (14°F).**

WITH CONSULT-II

1. Open engine hood.
2. Start engine and warm it up to normal operating temperature.
3. Turn ignition switch OFF and wait at least 10 seconds.
4. Turn ignition switch ON again and select “DATA MONITOR” mode with CONSULT-II.
5. Start engine and run it for at least 1 minute at idle speed.
6. If 1st trip DTC is detected, go to EC-1128, "Diagnostic Procedure" .

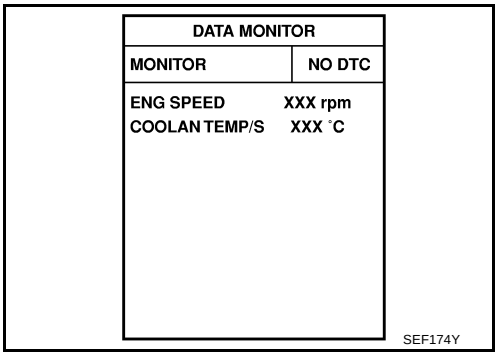

WITH GST

Follow the procedure “WITH CONSULT-II” above.

Diagnostic Procedure

ABS007PV

1. CHECK PCV HOSE CONNECTION

Confirm that PCV hose is connected correctly.

OK or NG

OK >> GO TO 2.
NG >> Repair or replace.

2. CHECK INTAKE AIR LEAK

1. Start engine and let it idle.
2. Listen for an intake air leak after the mass air flow sensor.

OK or NG

OK >> GO TO 3.
NG >> Discover air leak location and repair.

3. REPLACE ECM

1. Stop engine.
2. Replace ECM.
3. Perform initialization of IVIS (NATS) system and registration of all IVIS (NATS) ignition key IDs. Refer to BL-215, "ECM Re-Communicating Function" .
4. Perform EC-786, "VIN Registration" .
5. Perform EC-786, "Accelerator Pedal Released Position Learning" .
6. Perform EC-786, "Throttle Valve Closed Position Learning" .
7. Perform EC-787, "Idle Air Volume Learning" .

>> **INSPECTION END**

DTC P0550 PSP SENSOR

PFP:49763

Component Description

ABS007PW

Power steering pressure (PSP) sensor is installed to the power steering high-pressure tube and detects a power steering load. This sensor is a potentiometer which transforms the power steering load into output voltage, and emits the voltage signal to the ECM. The ECM controls the electric throttle control actuator and adjusts the throttle valve opening angle to increase the engine speed and adjusts the idle speed for the increased load.

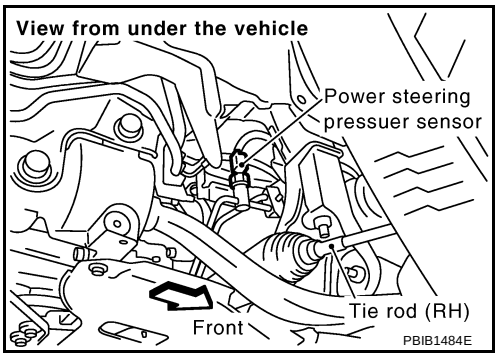

CONSULT-II Reference Value in Data Monitor Mode

ABS007PX

Specification data are reference values.

MONITOR ITEM	CONDITION		SPECIFICATION
PW/ST SIGNAL	● Engine: After warming up, idle the engine	Steering wheel: Not being turned (Forward direction)	OFF
		Steering wheel: Being turned	ON

On Board Diagnosis Logic

ABS007PY

The MIL will not light up for this diagnosis.

NOTE:
If DTC P0550 is displayed with DTC P1229, first perform the trouble diagnosis for DTC P1229. Refer to EC-1229 .

DTC No.	Trouble diagnosis name	DTC detecting condition	Possible cause
P0550 0550	Power steering pressure sensor circuit	An excessively low or high voltage from the sensor is sent to ECM.	● Harness or connectors (The sensor circuit is open or shorted) ● Power steering pressure sensor

DTC Confirmation Procedure

ABS007PZ

NOTE:
If DTC Confirmation Procedure has been previously conducted, always turn ignition switch OFF and wait at least 10 seconds before conducting the next test.

WITH CONSULT-II

1. Turn ignition switch ON.
2. Select “DATA MONITOR” mode with CONSULT-II.
3. Start engine and let it idle for at least 5 seconds.
4. If 1st trip DTC is detected, go to EC-1131, "Diagnostic Procedure" .

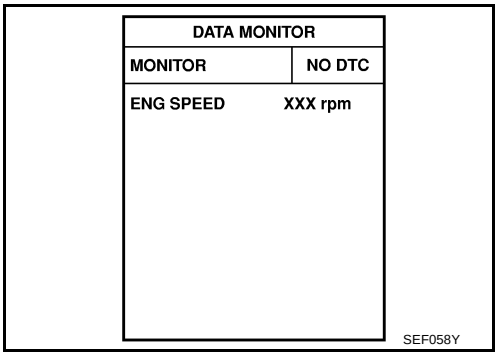

WITH GST

Follow the procedure “WITH CONSULT-II” above.

Wiring Diagram

ABS007Q0

EC-PS/SEN-01

: DETECTABLE LINE FOR DTC

: NON-DETECTABLE LINE FOR DTC

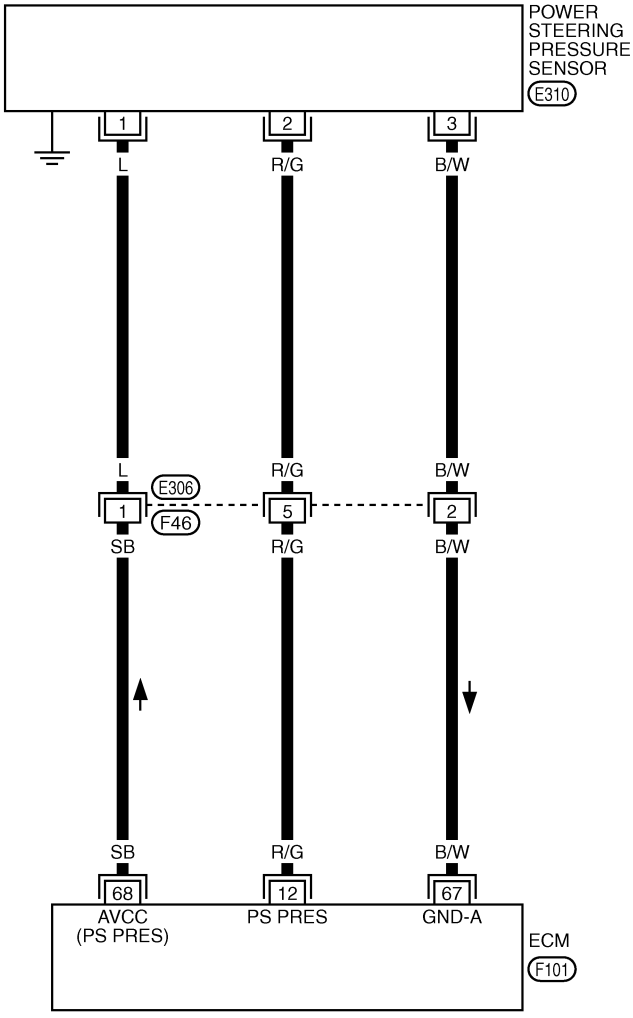

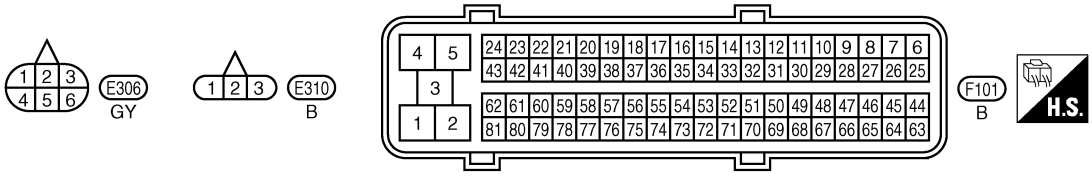

TBWM0249E

Specification data are reference values and are measured between each terminal and ground.

CAUTION:
Do not use ECM ground terminals when measuring input/output voltage. Doing so may result in damage to the ECM's transistor. Use a ground other than ECM terminals, such as the ground.

TERMINAL NO.	WIRE COLOR	ITEM	CONDITION	DATA (DC Voltage)
12	R/G	Power steering pressure sensor	**[Engine is running]** ● Steering wheel: Being turned	0.5 - 4.5V
			[Engine is running] ● Steering wheel: Not being turned	0.4 - 0.8V
67	B/W	Sensor ground	**[Engine is running]** ● **Warm-up condition** ● Idle speed	Approximately 0V
68	SB	Sensor power supply (Power steering pressure sensor)	**[Ignition switch: ON]**	Approximately 5V

Diagnostic Procedure

ABS007Q1

1. CHECK GROUND CONNECTIONS

1. Turn ignition switch OFF.
2. Loosen and retighten three ground screws on the body.
   Refer to EC-861, "Ground Inspection" .

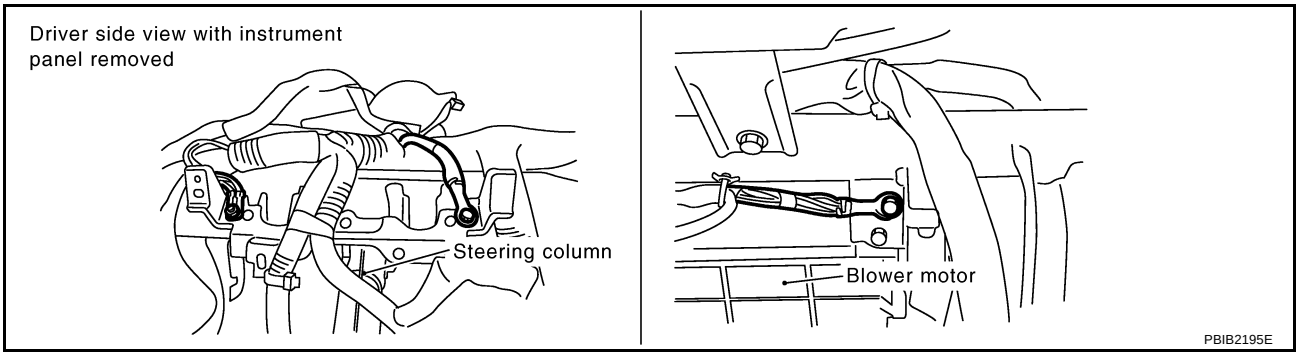

OK or NG

OK >> GO TO 2.
NG >> Repair or replace ground connections.

2. CHECK PSP SENSOR POWER SUPPLY CIRCUIT

1. Disconnect PSP sensor harness connector.
2. Turn ignition switch ON.

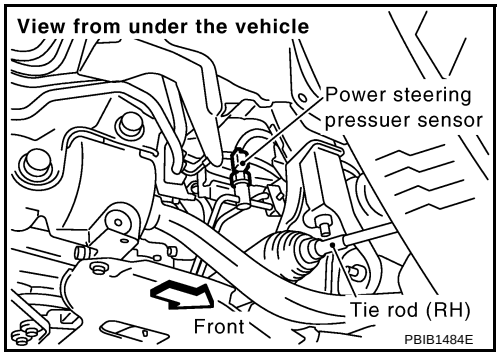

3. Check voltage between PSP sensor terminal 1 and ground with CONSULT-II or tester.

Voltage: Approximately 5V

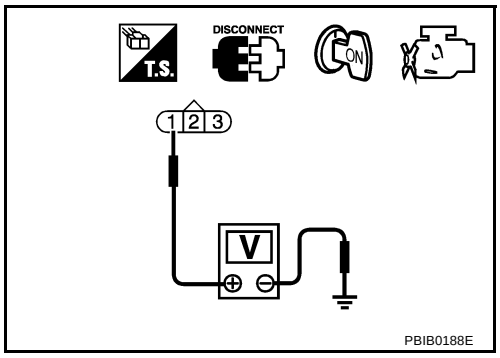

OK or NG

OK >> GO TO 4.
NG >> GO TO 3.

3. DETECT MALFUNCTIONING PART

Check the following.

- Harness connectors E306, F46
- Harness for open or short between power steering pressure sensor and ECM

>> Repair open circuit or short to ground or short to power in harness or connectors.

4. CHECK PSP SENSOR GROUND CIRCUIT FOR OPEN AND SHORT

1. Turn ignition switch OFF.
2. Disconnect ECM harness connector.
3. Check harness continuity between PSP sensor terminal 3 and ECM terminal 67.
   Refer to Wiring Diagram.

Continuity should exist.

4. Also check harness for short to ground and short to power.

OK or NG

OK >> GO TO 6.
NG >> GO TO 5.

5. DETECT MALFUNCTIONING PART

Check the following.

- Harness connectors E306, F46
- Harness for open or short between power steering pressure sensor and ECM

>> Repair open circuit or short to ground short to power in harness or connectors.

6. CHECK PSP SENSOR INPUT SIGNAL CIRCUIT FOR OPEN AND SHORT

1. Check harness continuity between ECM terminal 12 and PSP sensor terminal 2.

   Continuity should exist.

2. Also check harness for short to ground and short to power.

OK or NG

OK >> GO TO 8.
NG >> GO TO 7.

7. DETECT MALFUNCTIONING PART

Check the following.

- Harness connectors E306, F46
- Harness for open or short between power steering pressure sensor and ECM

>> Repair open circuit or short to ground or short to power in harness or connectors.

8. CHECK PSP SENSOR

Refer to EC-1133, "Component Inspection" .

OK or NG

OK >> GO TO 9.
NG >> Replace PSP sensor.

9. CHECK INTERMITTENT INCIDENT

Refer to EC-854, "TROUBLE DIAGNOSIS FOR INTERMITTENT INCIDENT" .

>> **INSPECTION END**

Component Inspection

ABS007Q2

POWER STEERING PRESSURE SENSOR

1. Reconnect all harness connectors disconnected.
2. Start engine and let it idle.
3. Check voltage between ECM terminal 12 and ground under the following conditions.

Condition	Voltage
Steering wheel is being turned.	0.5 - 4.5V
Steering wheel is not being turned.	0.4 - 0.8V

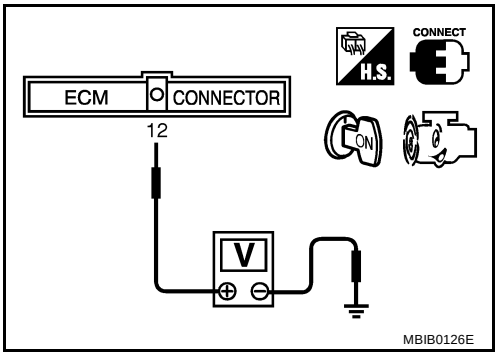

Removal and Installation

ABS00A3Y

POWER STEERING PRESSURE SENSOR

Refer to PS-41, "HYDRAULIC LINE" .

DTC P0605 ECM

PFP:23710

Component Description

ABS007Q3

The ECM consists of a microcomputer and connectors for signal input and output and for power supply. The ECM controls the engine.

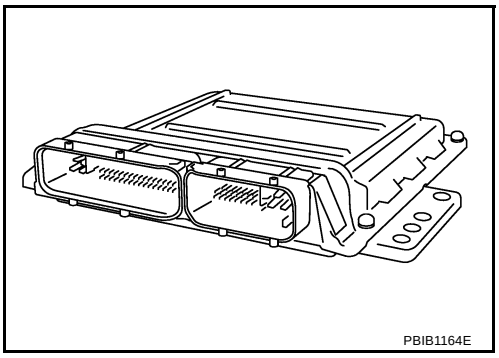

On Board Diagnosis Logic

ABS007Q4

This self-diagnosis has one or two trip detection logic.

DTC No.	Trouble diagnosis name	DTC detecting condition		Possible cause
P0605 0605	Engine control module	A)	ECM calculation function is malfunctioning.	● ECM
		B)	ECM EEP-ROM system is malfunctioning.	
		C)	ECM self shut-off function is malfunctioning.	

FAIL-SAFE MODE

ECM enters fail-safe mode when the malfunction A is detected.

Detected items	Engine operation condition in fail-safe mode
Malfunction A	● ECM stops the electric throttle control actuator control, throttle valve is maintained at a fixed opening (approx. 5 degrees) by the return spring. ● ECM deactivates ASCD operation.

DTC Confirmation Procedure

ABS007Q5

Perform PROCEDURE FOR MALFUNCTION A first. If the 1st trip DTC cannot be confirmed, perform PROCEDURE FOR MALFUNCTION B. If there is no malfunction on PROCEDURE FOR MALFUNCTION B, perform PROCEDURE FOR MALFUNCTION C.

NOTE:

If DTC Confirmation Procedure has been previously conducted, always turn ignition switch OFF and wait at least 10 seconds before conducting the next test.

PROCEDURE FOR MALFUNCTION A

With CONSULT-II

1. Turn ignition switch ON.
2. Select “DATA MONITOR” mode with CONSULT-II.
3. If 1st trip DTC is detected, go to EC-1135, "Diagnostic Procedure" .

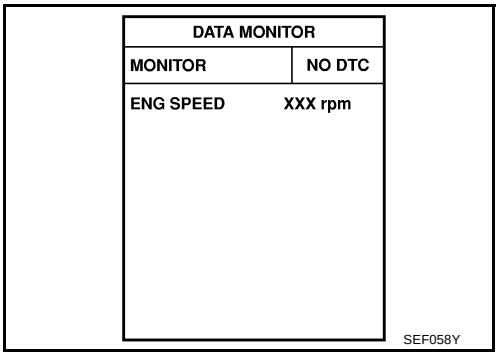

With GST

Follow the procedure “With CONSULT-II” above.

PROCEDURE FOR MALFUNCTION B

With CONSULT-II

1. Turn ignition switch ON and wait at least 1 second.
2. Select “DATA MONITOR” mode with CONSULT-II.
3. Turn ignition switch OFF, wait at least 10 seconds, and then turn ON.
4. If 1st trip DTC is detected, go to EC-1135, "Diagnostic Procedure" .

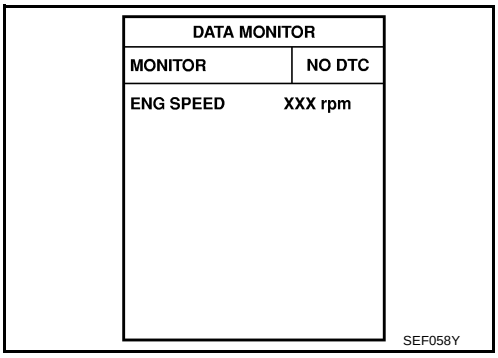

With GST

Follow the procedure “With CONSULT-II” above.

PROCEDURE FOR MALFUNCTION C

With CONSULT-II

1. Turn ignition switch ON and wait at least 1 second.
2. Select “DATA MONITOR” mode with CONSULT-II.
3. Turn ignition switch OFF, wait at least 10 seconds, and then turn ON.
4. Repeat step 3 for 32 times.
5. If 1st trip DTC is detected, go to EC-1135, "Diagnostic Procedure" .

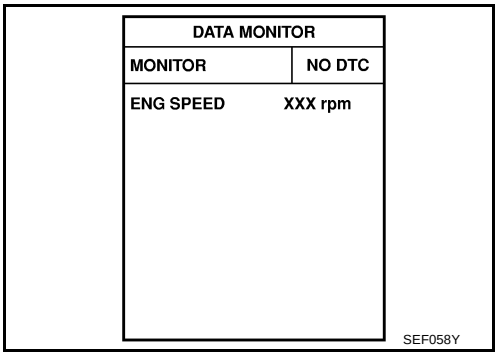

With GST

Follow the procedure “With CONSULT-II” above.

Diagnostic Procedure

ABS007Q6

1. INSPECTION START

With CONSULT-II

1. Turn ignition switch ON.
2. Select “SELF-DIAG RESULTS” mode with CONSULT-II.
3. Touch “ERASE”.
4. **Perform DTC Confirmation Procedure.**
   See EC-1134, "DTC Confirmation Procedure" .
5. Is the 1st trip DTC P0605 displayed again?

With GST

1. Turn ignition switch ON.
2. Select “Service $04” with GST.
3. Touch “ERASE”.
4. **Perform DTC Confirmation Procedure.**
   See EC-1134, "DTC Confirmation Procedure" .
5. Is the 1st trip DTC P0605 displayed again?

Yes or No

Yes >> GO TO 2.
No >> **INSPECTION END**

2. REPLACE ECM

1. Replace ECM.
2. Perform initialization of IVIS (NATS) system and registration of all IVIS (NATS) ignition key IDs. Refer to BL-215, "ECM Re-Communicating Function" .
3. Perform EC-786, "VIN Registration" .
4. Perform EC-786, "Accelerator Pedal Released Position Learning" .
5. Perform EC-786, "Throttle Valve Closed Position Learning" .
6. Perform EC-787, "Idle Air Volume Learning" .

>> **INSPECTION END**

DTC P1065 ECM POWER SUPPLY

PFP:23710

Component Description

ABS007Q7

Battery voltage is supplied to the ECM even when the ignition switch is turned OFF for the ECM memory function of the DTC memory, the air-fuel ratio feedback compensation value memory, the idle air volume learning value memory, etc.

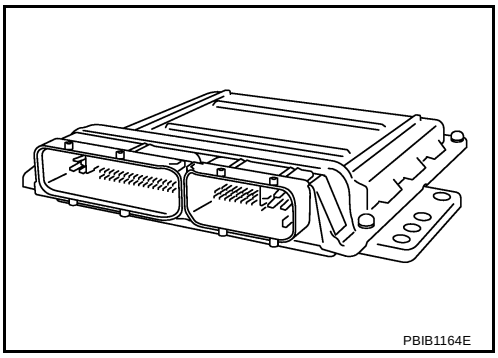

On Board Diagnosis Logic

ABS007Q8

DTC No.	Trouble diagnosis name	DTC detecting condition	Possible cause
P1065 1065	ECM power supply circuit	ECM back-up RAM system does not function properly.	● Harness or connectors [ECM power supply (back-up) circuit is open or shorted.] ● ECM

DTC Confirmation Procedure

ABS007Q9

NOTE:
If DTC Confirmation Procedure has been previously conducted, always turn ignition switch OFF and wait at least 10 seconds before conducting the next test.

WITH CONSULT-II

1. Turn ignition switch ON and wait at least 1 second.
2. Select “DATA MONITOR” mode with CONSULT-II.
3. Start engine and let it idle for 1 second.
4. Turn ignition switch OFF, wait at least 10 seconds, and then turn ON.
5. Repeat steps 3 and 4 for 4 times.
6. If 1st trip DTC is detected, go to EC-1139, "Diagnostic Procedure" .

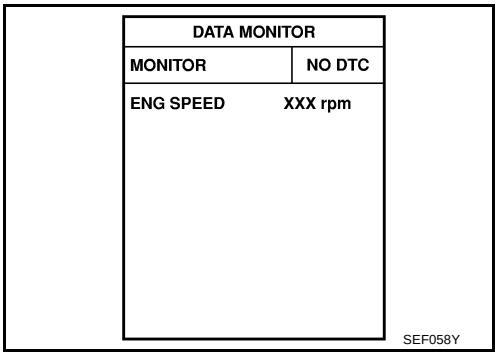

WITH GST

Follow the procedure “WITH CONSULT-II” above.

Wiring Diagram

ABS007QA

EC-ECM/PW-01

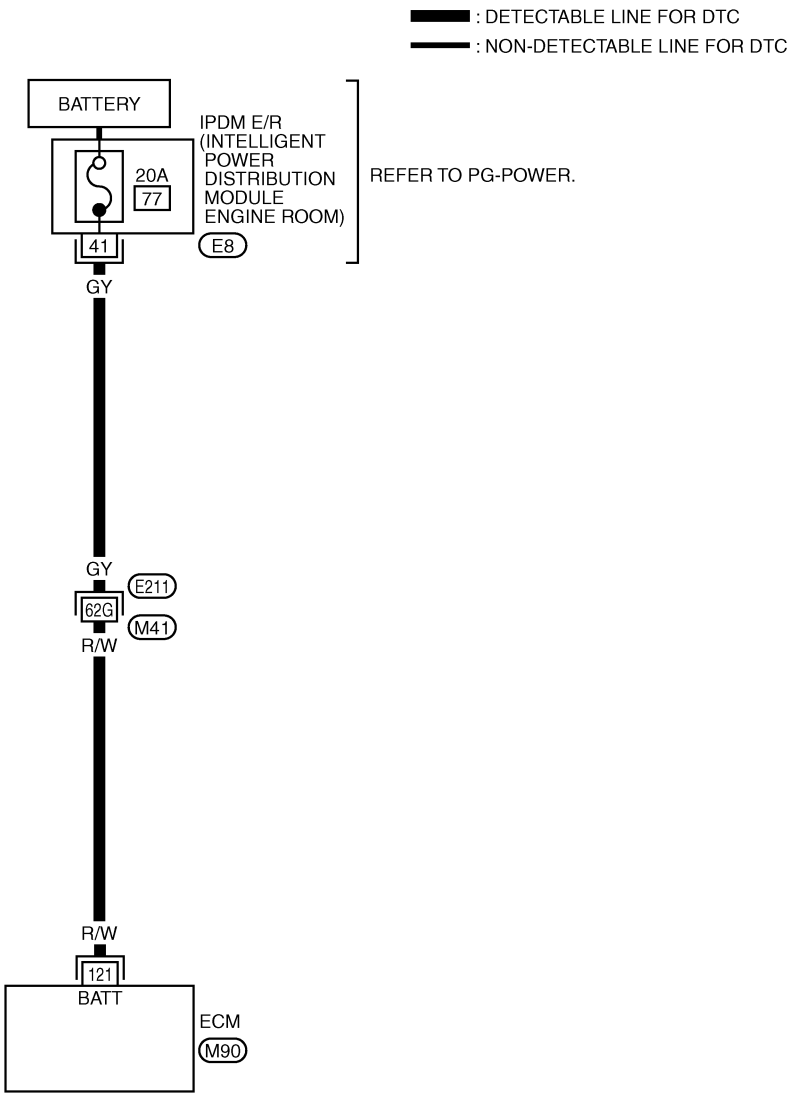

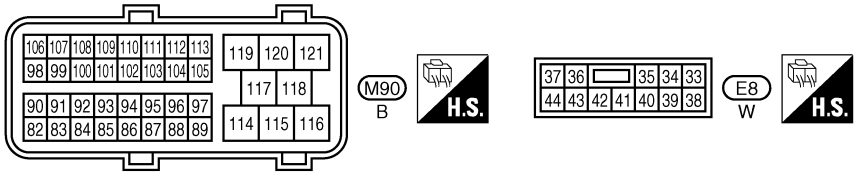

REFER TO THE FOLLOWING.
E211 -SUPER MULTIPLE JUNCTION (SMJ)

TBWM0250E

Specification data are reference values and are measured between each terminal and ground.

CAUTION:
Do not use ECM ground terminals when measuring input/output voltage. Doing so may result in damage to the ECM's transistor. Use a ground other than ECM terminals, such as the ground.

TERMINAL NO.	WIRE COLOR	ITEM	CONDITION	DATA (DC Voltage)
121	R/W	Power supply for ECM (Back-up)	**[Ignition switch: OFF]**	BATTERY VOLTAGE (11 - 14V)

Diagnostic Procedure

ABS007QB

1. CHECK ECM POWER SUPPLY

1. Turn ignition switch OFF.
2. Disconnect ECM harness connector.
3. Check voltage between ECM terminal 121 and ground with CONSULT-II or tester.

Voltage: Battery voltage

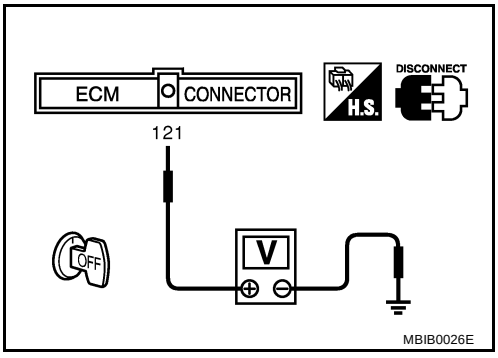

OK or NG

OK >> GO TO 3.
NG >> GO TO 2.

2. DETECT MALFUNCTIONING PART

Check the following.

- Harness connectors E211, M41
- 20A fuse
- IPDM E/R harness connector E8
- Harness for open or short between ECM and battery

>> Repair or replace harness or connectors.

3. CHECK INTERMITTENT INCIDENT

Refer to EC-854, "TROUBLE DIAGNOSIS FOR INTERMITTENT INCIDENT" .

OK or NG

OK >> GO TO 4.
NG >> Repair or replace harness or connectors.

4. PERFORM DTC CONFIRMATION PROCEDURE

With CONSULT-II

1. Turn ignition switch ON.
2. Select “SELF-DIAG RESULTS” mode with CONSULT-II.
3. Touch “ERASE”.
4. **Perform DTC Confirmation Procedure.**
   See EC-1137, "DTC Confirmation Procedure" .
5. Is the 1st trip DTC P1065 displayed again?

With GST

1. Turn ignition switch ON.
2. Select “Service $04” with GST.
3. Touch “ERASE”.
4. **Perform DTC Confirmation Procedure.**
   See EC-1137, "DTC Confirmation Procedure" .
5. Is the 1st trip DTC P1065 displayed again?

Yes or No

Yes >> GO TO 5.
No >> **INSPECTION END**

5. REPLACE ECM

1. Replace ECM.
2. Perform initialization of IVIS (NATS) system and registration of all IVIS (NATS) ignition key IDs. Refer to BL-215, "ECM Re-Communicating Function" .
3. Perform EC-786, "VIN Registration" .
4. Perform EC-786, "Accelerator Pedal Released Position Learning" .
5. Perform EC-786, "Throttle Valve Closed Position Learning" .
6. Perform EC-787, "Idle Air Volume Learning" .

>> **INSPECTION END**

DTC P1111, P1136 IVT CONTROL SOLENOID VALVE

PFP:23796

Component Description

ABS007QK

Intake valve timing control solenoid valve is activated by ON/OFF pulse duty (ratio) signals from the ECM.
The intake valve timing control solenoid valve changes the oil amount and direction of flow through intake valve timing control unit or stops oil flow.
The longer pulse width advances valve angle.
The shorter pulse width retards valve angle.
When ON and OFF pulse widths become equal, the solenoid valve stops oil pressure flow to fix the intake valve angle at the control position.

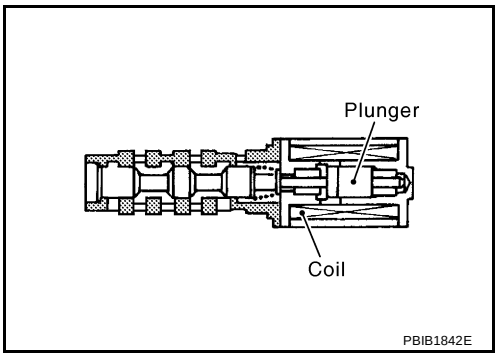

CONSULT-II Reference Value in Data Monitor Mode

ABS007QL

Specification data are reference values.

MONITOR ITEM	CONDITION		SPECIFICATION
INT/V SOL (B1) INT/V SOL (B2)	● Engine: After warming up ● Selector lever: P or N ● Air conditioner switch: OFF ● No load	Idle	0% - 2%
		2,000 rpm	Approx. 25% - 50%

On Board Diagnosis Logic

ABS007QM

DTC No.	Trouble diagnosis name	DTC detecting condition	Possible cause
P1111 1111 (Bank 1)	Intake valve timing control solenoid valve circuit	An improper voltage is sent to the ECM through intake valve timing control solenoid valve.	● Harness or connectors (Intake valve timing control solenoid valve circuit is open or shorted.) ● Intake valve timing control solenoid valve
P1136 1136 (Bank 2)			

DTC Confirmation Procedure

ABS007QN

NOTE:
If DTC Confirmation Procedure has been previously conducted, always turn ignition switch OFF and wait at least 10 seconds before conducting the next test.

WITH CONSULT-II

1. Turn ignition switch ON.
2. Select “DATA MONITOR” mode with CONSULT-II.
3. Start engine and let it idle for 5 seconds.
4. If 1st trip DTC is detected, go to EC-1145, "Diagnostic Procedure" .

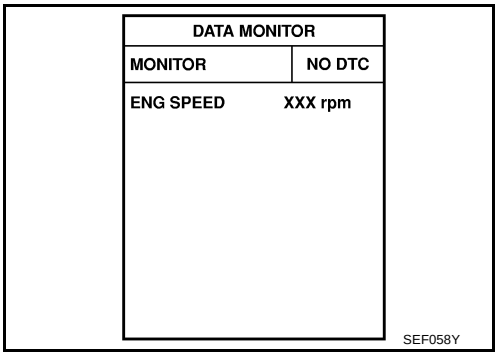

WITH GST

Following the procedure “WITH CONSULT-II” above.

Wiring Diagram
BANK 1

ABS007QO

EC-IVCB1-01

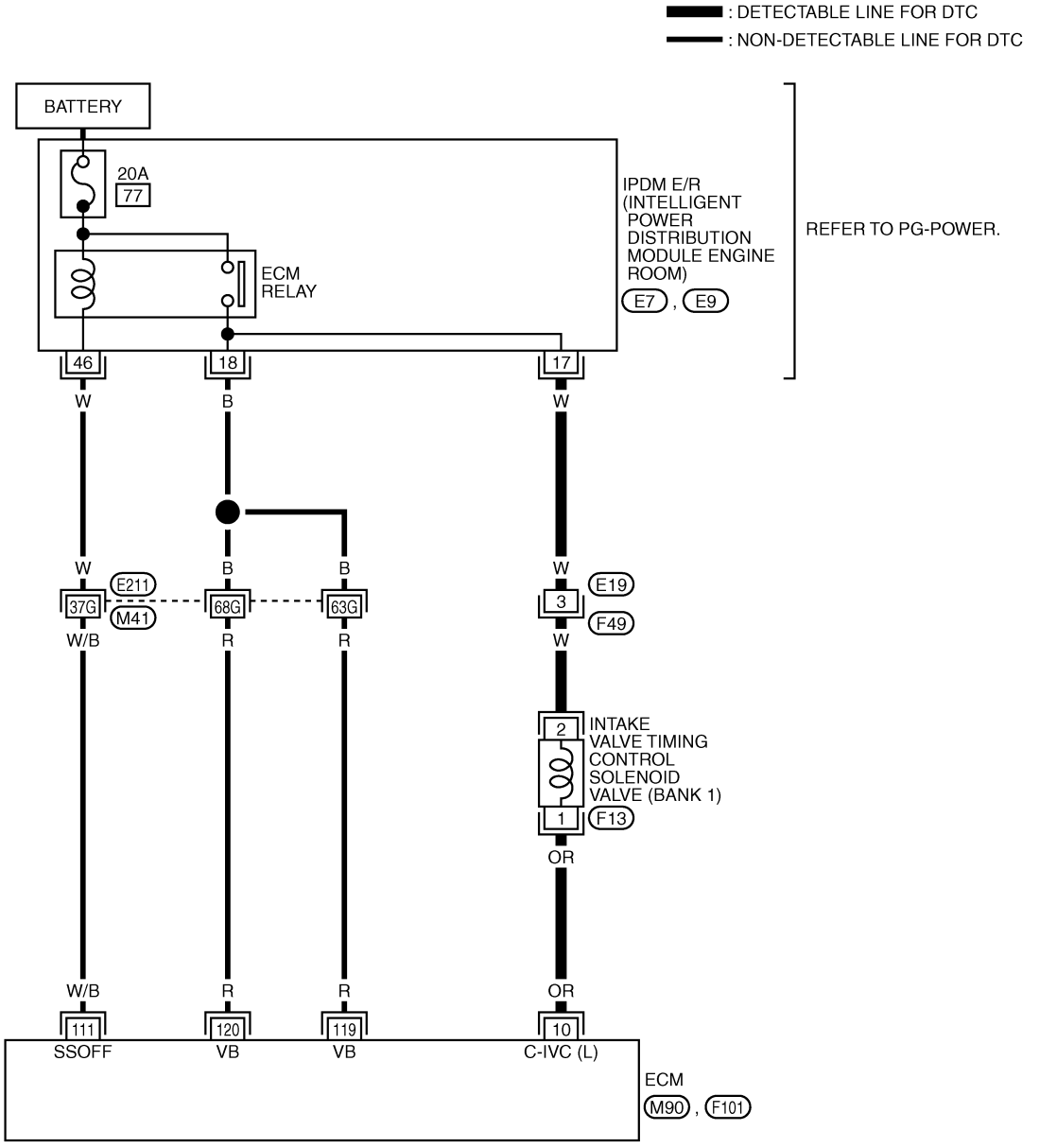

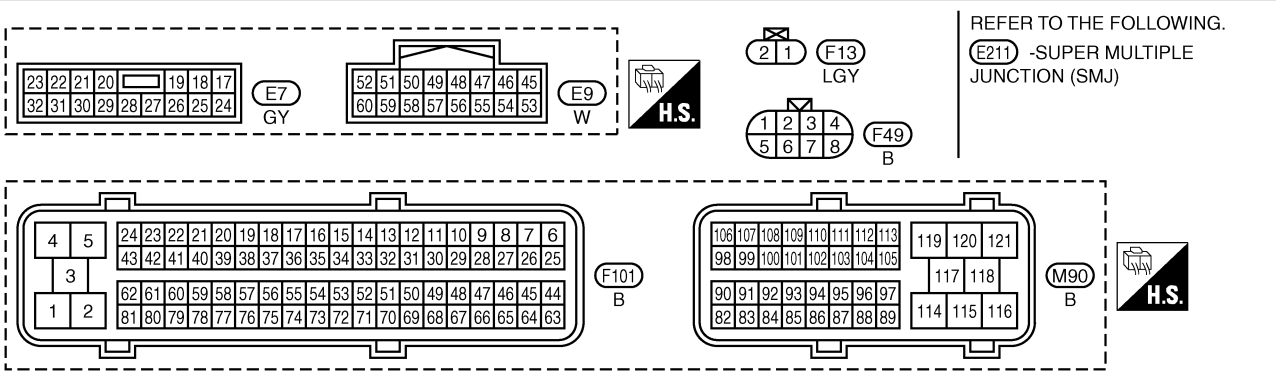

TBWM0219E

Specification data are reference values and are measured between each terminal and ground.
Pulse signal is measured by CONSULT-II.

CAUTION:
Do not use ECM ground terminals when measuring input/output voltage. Doing so may result in damage to the ECM's transistor. Use a ground other than ECM terminals, such as the ground.

TERMINAL NO.	WIRE COLOR	ITEM	CONDITION	DATA (DC Voltage)
10	OR	Intake valve timing control solenoid valve (bank 1)	**[Engine is running]** ● **Warm-up condition** ● Idle speed	BATTERY VOLTAGE (11 - 14V)
			[Engine is running] ● **Warm-up condition** ● Engine speed: 2,000rpm	7 - 12V★ 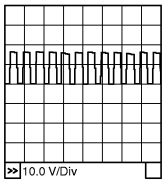 PBIB1790E

★: Average voltage for pulse signal (Actual pulse signal can be confirmed by oscilloscope.)

BANK 2

EC-IVCB2-01

: DETECTABLE LINE FOR DTC
: NON-DETECTABLE LINE FOR DTC

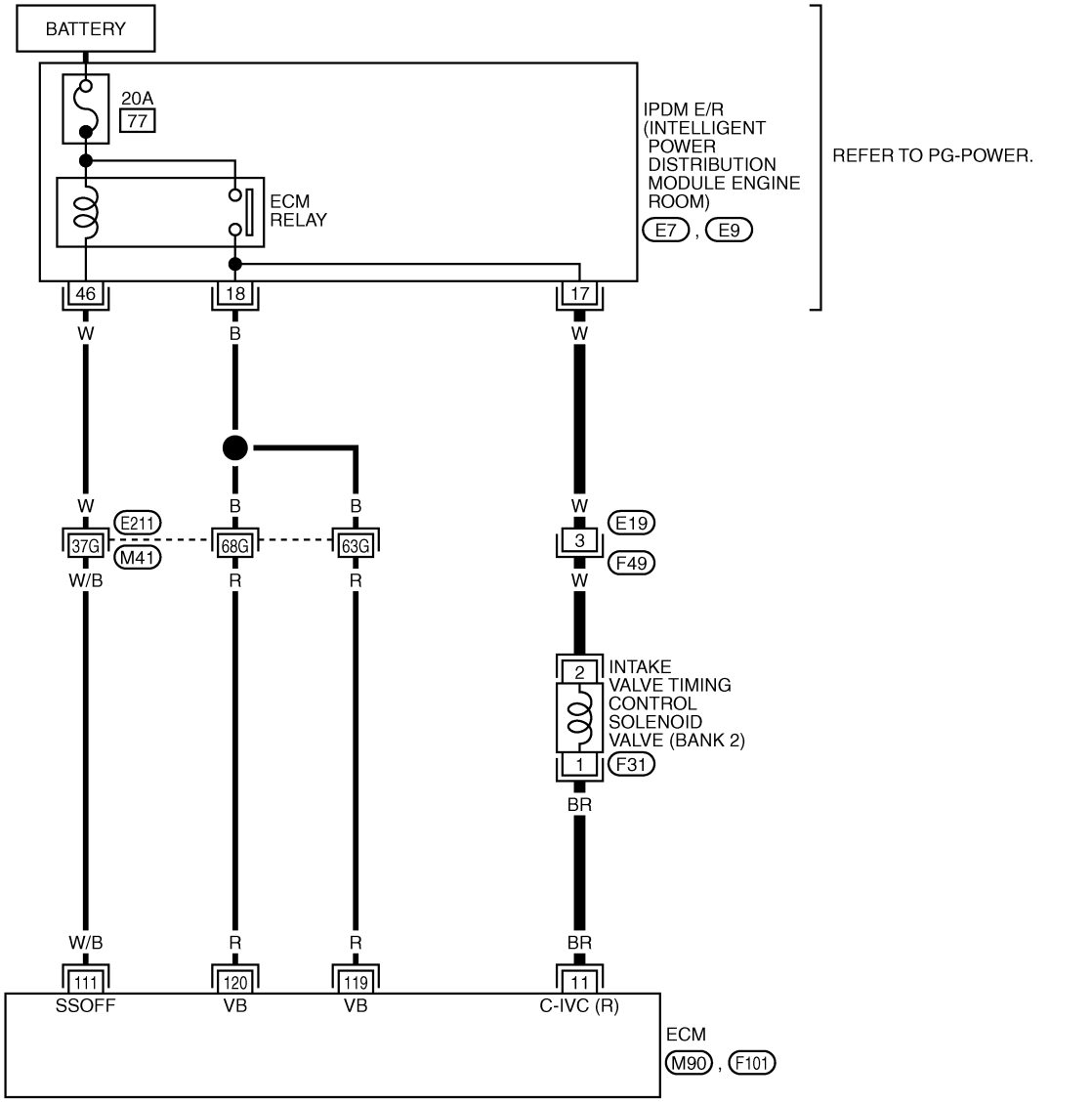

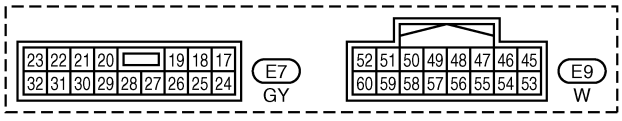

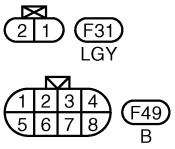

REFER TO THE FOLLOWING.
E211 -SUPER MULTIPLE JUNCTION (SMJ)

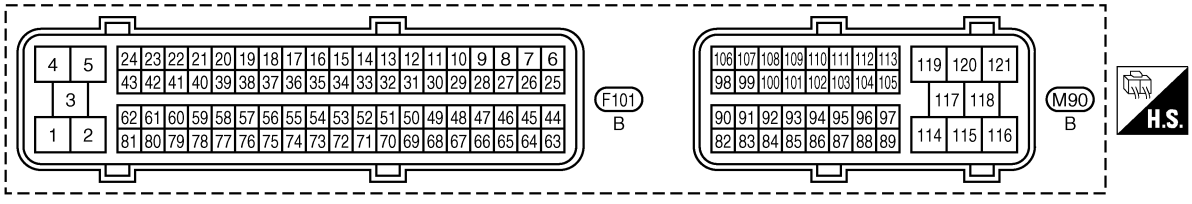

TBWM0220E

Specification data are reference values and are measured between each terminal and ground.
Pulse signal is measured by CONSULT-II.

CAUTION:
Do not use ECM ground terminals when measuring input/output voltage. Doing so may result in damage to the ECM's transistor. Use a ground other than ECM terminals, such as the ground.

TERMINAL NO.	WIRE COLOR	ITEM	CONDITION	DATA (DC Voltage)
11	BR	Intake valve timing control solenoid valve (bank 2)	**[Engine is running]** ● **Warm-up condition** ● Idle speed	BATTERY VOLTAGE (11 - 14V)
			[Engine is running] ● **Warm-up condition** ● Engine speed: 2,000rpm	7 - 12V★ 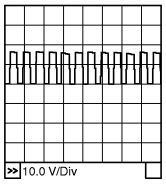 PBIB1790E

★: Average voltage for pulse signal (Actual pulse signal can be confirmed by oscilloscope.)

Diagnostic Procedure

ABS007QP

1. CHECK INTAKE VALVE TIMING CONTROL SOLENOID VALVE POWER SUPPLY CIRCUIT

1. Turn ignition switch OFF.
2. Disconnect intake valve timing control solenoid valve harness connector.

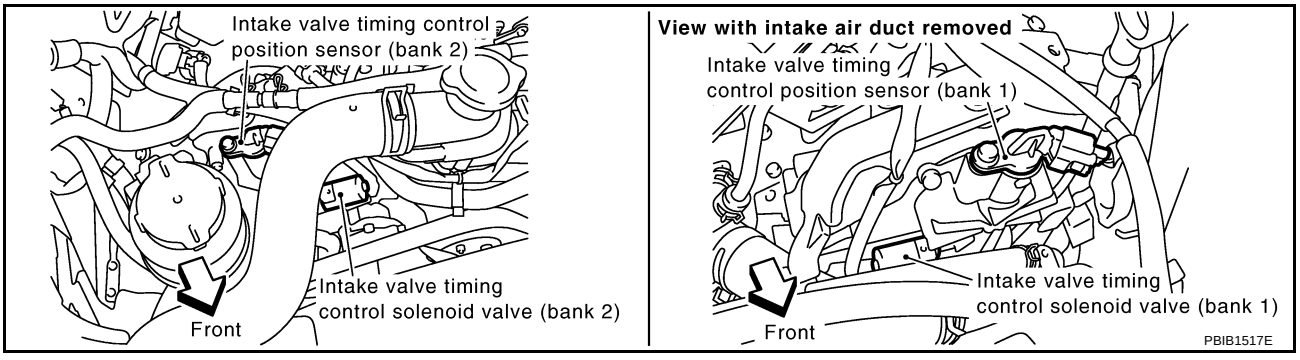

3. Turn ignition switch ON.
4. Check voltage between intake valve timing control solenoid valve terminal 2 and ground with CONSULT-II or tester.

Voltage: Battery voltage

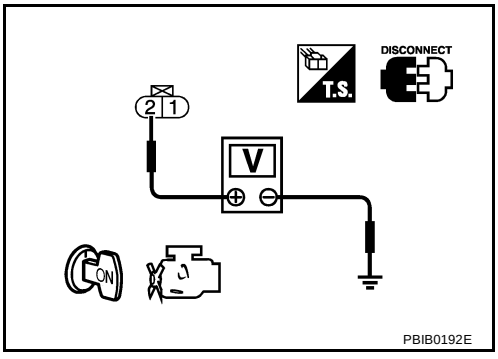

OK or NG

OK >> GO TO 3.
NG >> GO TO 2.

2. DETECT MALFUNCTIONING PART

Check the following.

- Harness connectors E19, F49
- IPDM E/R harness connector E7
- Harness for open or short between intake valve timing control solenoid valve and IPDM E/R

>> Repair open circuit or short to ground or short to power in harness or connectors.

3. CHECK INTAKE VALVE TIMING CONTROL SOLENOID VALVE OUTPUT SIGNAL CIRCUIT FOR OPEN AND SHORT

1. Turn ignition switch OFF.
2. Disconnect ECM harness connector.
3. Check harness continuity between the following;
   ECM terminal 10 and intake valve timing control solenoid valve (bank 1) terminal 1 or
   ECM terminal 11 and intake valve timing control solenoid valve (bank 2) terminal 1.
   Refer to Wiring Diagram.

   Continuity should exist.

4. Also check harness for short to ground and short to power.

OK or NG

OK >> GO TO 4.
NG >> Repair open circuit or short to ground or short to power in harness or connectors.

4. CHECK INTAKE VALVE TIMING CONTROL SOLENOID VALVE

Refer to EC-1147, "Component Inspection" .

OK or NG

OK >> GO TO 5.
NG >> Replace intake valve timing control solenoid valve.

5. CHECK INTERMITTENT INCIDENT

Refer to EC-854, "TROUBLE DIAGNOSIS FOR INTERMITTENT INCIDENT" .

>> **INSPECTION END**

Component Inspection

ABS007QQ

INTAKE VALVE TIMING CONTROL SOLENOID VALVE

1. Disconnect intake valve timing control solenoid valve harness connector.
2. Check resistance between intake valve timing control solenoid valve terminals as follows.

Terminals	Resistance
1 and 2	7.0 - 7.5Ω [at 20°C (68°F)]
1 or 2 and ground	∞Ω (Continuity should not exist)

If NG, replace intake valve timing control solenoid valve.
If OK, go to next step.

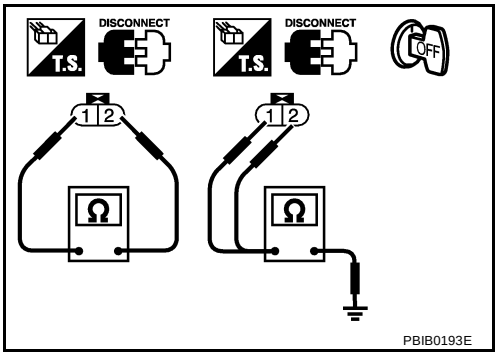

3. Remove intake valve timing control solenoid valve.
4. Provide 12V DC between intake valve timing control solenoid valve terminals and then interrupt it. Make sure that the plunger moves as shown in the figure.

   CAUTION:
   Do not apply 12V DC continuously for 5 seconds or more. Doing so may result in damage to the coil in intake valve timing control solenoid valve.
   If NG, replace intake valve timing control solenoid valve.

   NOTE:
   Always replace O-ring when intake valve timing control solenoid valve is removed.

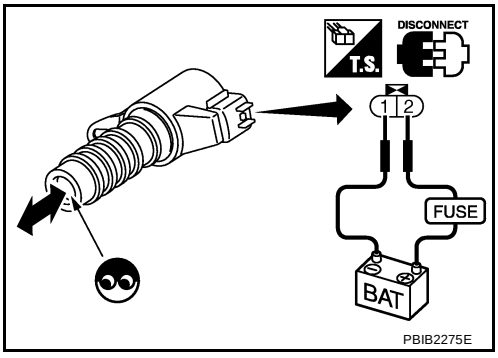

Removal and Installation

ABS007QR

INTAKE VALVE TIMING CONTROL SOLENOID VALVE

Refer to EM-200, "TIMING CHAIN" .

DTC P1121 ELECTRIC THROTTLE CONTROL ACTUATOR

PFP:16119

Component Description

ABS007QS

Electric throttle control actuator consists of throttle control motor, throttle position sensor, etc.
The throttle control motor is operated by the ECM and it opens and closes the throttle valve.
The throttle position sensor detects the throttle valve position, and the opening and closing speed of the throttle valve and feeds the voltage signals to the ECM. The ECM judges the current opening angle of the throttle valve from these signals and the ECM controls the throttle control motor to make the throttle valve opening angle properly in response to driving condition.

On Board Diagnosis Logic

ABS007QT

This self-diagnosis has one trip detection logic.

DTC No.	Trouble diagnosis name	DTC detecting condition		Possible cause
P1121 1121	Electric throttle control actuator	A)	Electric throttle control actuator does not function properly due to the return spring malfunction.	● Electric throttle control actuator
		B)	Throttle valve opening angle in fail-safe mode is not in specified range.	
		C)	ECM detect the throttle valve is stuck open.	

FAIL-SAFE MODE

When the malfunction is detected, ECM enters fail-safe mode and the MIL lights up.

Detected items	Engine operating condition in fail-safe mode
Malfunction A	The ECM controls the electric throttle actuator by regulating the throttle opening around the idle position. The engine speed will not rise more than 2,000 rpm.
Malfunction B	ECM controls the electric throttle control actuator by regulating the throttle opening to 20 degrees or less.
Malfunction C	While the vehicle is driving, it slows down gradually by fuel cut. After the vehicle stops, the engine stalls. The engine can restart in N or P position, and engine speed will not exceed 1,000 rpm or more.

DTC Confirmation Procedure

ABS007QU

NOTE:

- **Perform PROCEDURE FOR MALFUNCTION A AND B first. If the DTC cannot be confirmed, perform PROCEDURE FOR MALFUNCTION C.**
- If DTC Confirmation Procedure has been previously conducted, always turn ignition switch OFF and wait at least 10 seconds before conducting the next test.

PROCEDURE FOR MALFUNCTION A AND B

With CONSULT-II

1. Turn ignition switch ON and wait at least 1 second.
2. Select “DATA MONITOR” mode with CONSULT-II.
3. Shift selector lever to D position and wait at least 3 seconds.
4. Shift selector lever to P position.
5. Turn ignition switch OFF and wait at least 10 seconds.
6. Turn ignition switch ON and wait at least 1 second.
7. Shift selector lever to D position and wait at least 3 seconds.
8. Shift selector lever to P position.
9. Turn ignition switch OFF, wait at least 10 seconds, and then turn ON.
10. If DTC is detected, go to EC-1149, "Diagnostic Procedure" .

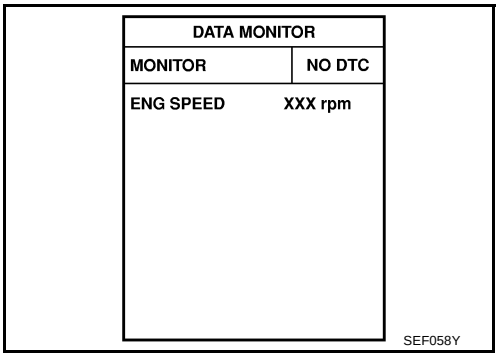

With GST

Follow the procedure “With CONSULT-II” above.

PROCEDURE FOR MALFUNCTION C

With CONSULT-II

1. Turn ignition switch ON and wait at least 1 second.
2. Select “DATA MONITOR” mode with CONSULT-II.
3. Shift selector lever to D position and wait at least 3 seconds.
4. Shift selector lever to N, P position.
5. Start engine and let it idle for 3 seconds.
6. If DTC is detected, go to EC-1149, "Diagnostic Procedure" .

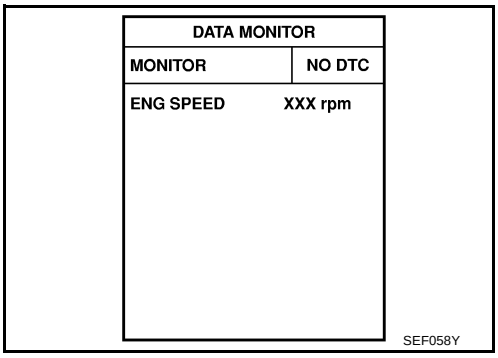

With GST

Follow the procedure “With CONSULT-II” above.

Diagnostic Procedure

ABS007QV

1. CHECK ELECTRIC THROTTLE CONTROL ACTUATOR VISUALLY

1. Remove the intake air duct.
2. Check if a foreign matter is caught between the throttle valve and the housing.

OK or NG

OK >> GO TO 2.
NG >> Remove the foreign matter and clean the electric throttle control actuator inside.

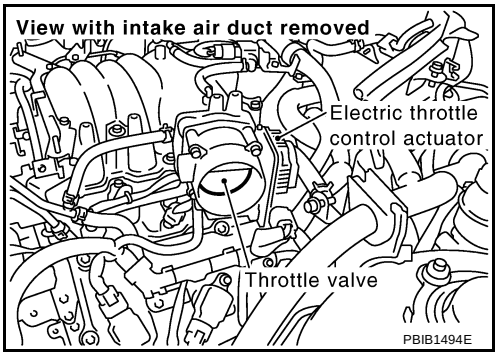

2. REPLACE ELECTRIC THROTTLE CONTROL ACTUATOR

1. Replace the electric throttle control actuator.
2. Perform EC-786, "Throttle Valve Closed Position Learning" .
3. Perform EC-787, "Idle Air Volume Learning" .

>> **INSPECTION END**

DTC P1122 ELECTRIC THROTTLE CONTROL FUNCTION

PFP:16119

Description

ABS007QW

NOTE:
If DTC P1122 is displayed with DTC P1121 or 1126, first perform the trouble diagnosis for DTC P1121 or P1126. Refer to EC-1148 or EC-1156 .
Electric throttle control actuator consists of throttle control motor, throttle position sensor, etc.
The throttle control motor is operated by the ECM and it opens and closes the throttle valve.
The current opening angle of the throttle valve is detected by the throttle position sensor and it provides feedback to the ECM to control the throttle control motor to make the throttle valve opening angle properly in response to driving condition.

On Board Diagnosis Logic

ABS007QX

This self-diagnosis has the one trip detection logic.

DTC No.	Trouble diagnosis name	DTC detecting condition	Possible cause
P1122 1122	Electric throttle control performance problem	Electric throttle control function does not operate properly.	● Harness or connectors (Throttle control motor circuit is open or shorted) ● Electric throttle control actuator

FAIL-SAFE MODE

When the malfunction is detected, ECM enters fail-safe mode and the MIL lights up.

Engine operating condition in fail-safe mode
ECM stops the electric throttle control actuator control, throttle valve is maintained at a fixed opening (approx. 5 degrees) by the return spring.

DTC Confirmation Procedure

ABS007QY

NOTE:
If DTC Confirmation Procedure has been previously conducted, always turn ignition switch OFF and wait at least 10 seconds before conducting the next test.
TESTING CONDITION:
Before performing the following procedure, confirm that battery voltage is more than 11V when engine is running.

WITH CONSULT-II

1. Turn ignition switch ON and wait at least 2 seconds.
2. Select “DATA MONITOR” mode with CONSULT-II.
3. Start engine and let it idle for 5 seconds.
4. If DTC is detected, go to EC-1152, "Diagnostic Procedure" .

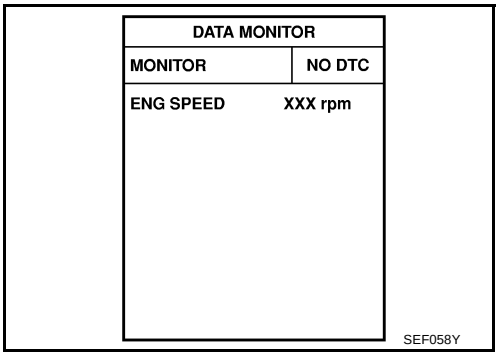

WITH GST

Follow the procedure “WITH CONSULT-II” above.

Wiring Diagram

ABS007QZ

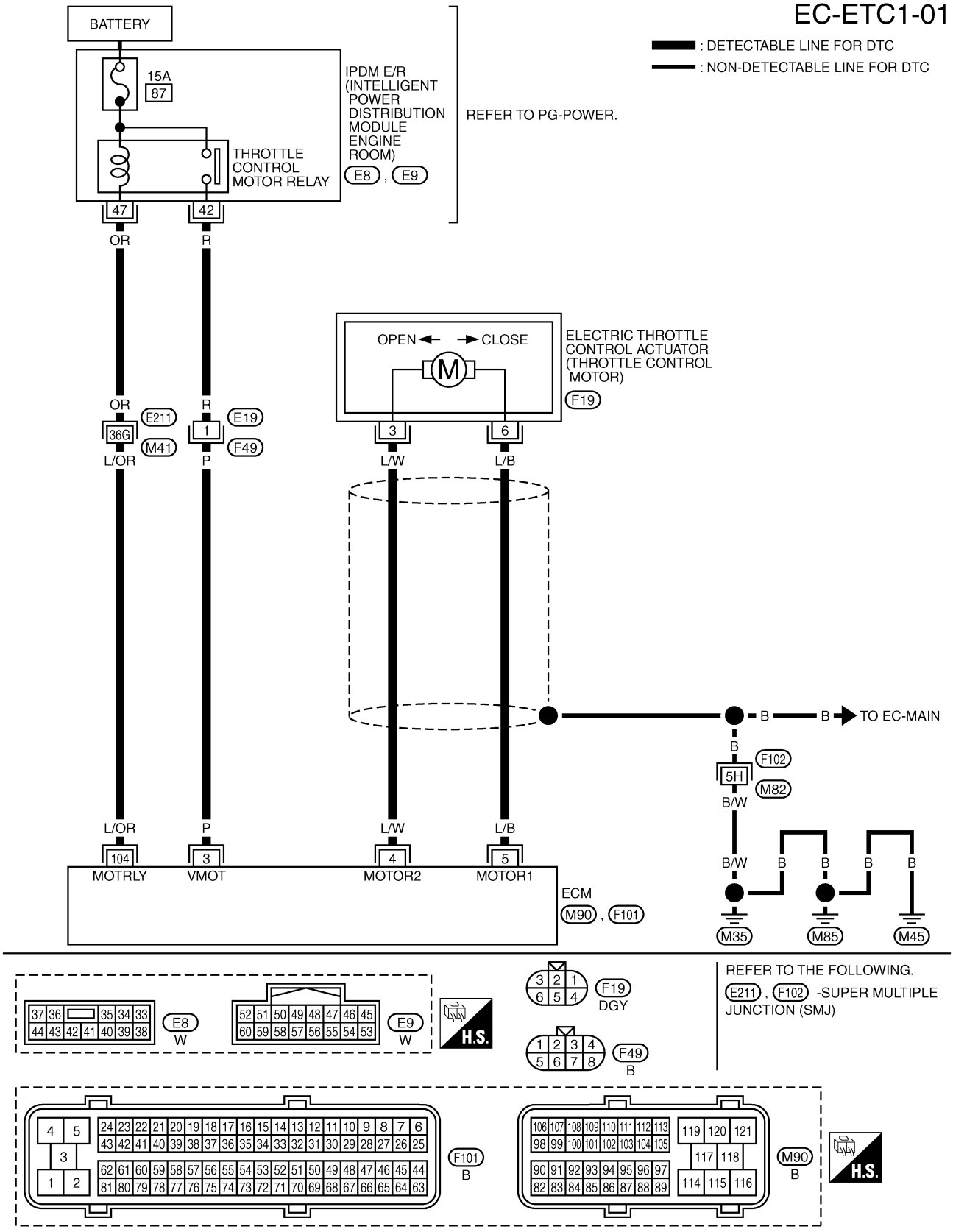

TBWM0415E

Specification data are reference values and are measured between each terminal and ground.
Pulse signal is measured by CONSULT-II.

CAUTION:
Do not use ECM ground terminals when measuring input/output voltage. Doing so may result in damage to the ECM's transistor. Use a ground other than ECM terminals, such as the ground.

TERMINAL NO.	WIRE COLOR	ITEM	CONDITION	DATA (DC Voltage)
3	P	Throttle control motor relay power supply	**[Ignition switch: ON]**	BATTERY VOLTAGE (11 - 14V)
4	L/W	Throttle control motor (Close)	**[Ignition switch: ON]** ● Engine stopped ● Selector lever: D ● Accelerator pedal: Released	0 - 14V★ 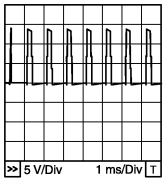 PBIB1104E
5	L/B	Throttle control motor (Open)	**[Ignition switch: ON]** ● Engine stopped ● Selector lever: D ● Accelerator pedal: Fully depressed	0 - 14V★ 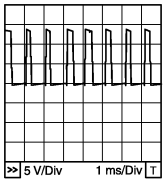 PBIB1105E
104	L/OR	Throttle control motor relay	**[Ignition switch: OFF]**	BATTERY VOLTAGE (11 - 14V)
			[Ignition switch: ON]	0 - 1.0V

★: Average voltage for pulse signal (Actual pulse signal can be confirmed by oscilloscope.)

Diagnostic Procedure

ABS007R0

1. CHECK GROUND CONNECTIONS

1. Turn ignition switch OFF.
2. Loosen and retighten three ground screws on the body.
   Refer to EC-861, "Ground Inspection" .

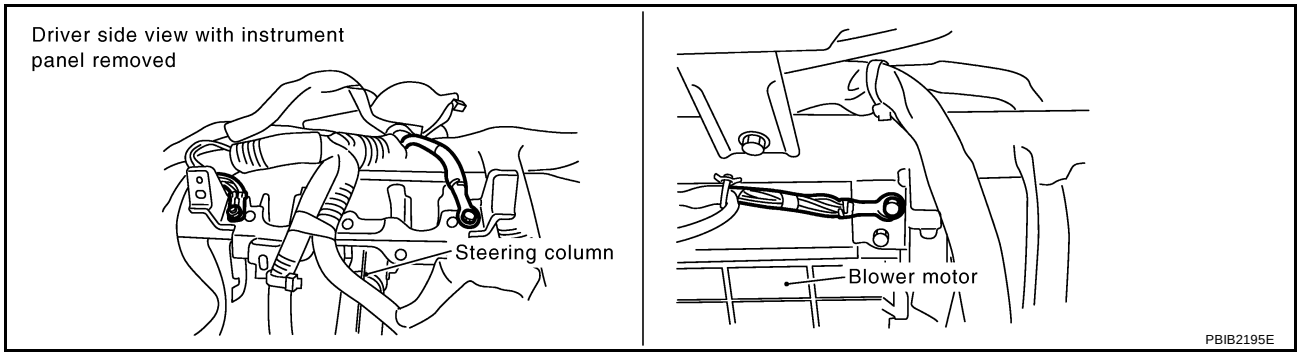

OK or NG

OK >> GO TO 2.
NG >> Repair or replace ground connections.

2. CHECK THROTTLE CONTROL MOTOR RELAY INPUT SIGNAL CIRCUIT-I

1. Check voltage between ECM terminal 3 and ground under the following conditions with CONSULT-II or tester.

Ignition switch	Voltage
OFF	Approximately 0V
ON	Battery voltage (11 - 14V)

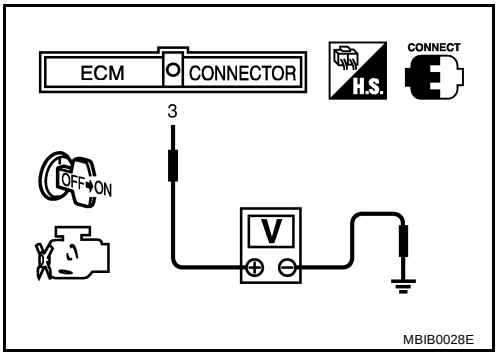

OK or NG

OK >> GO TO 10.
NG >> GO TO 3.

3. CHECK THROTTLE CONTROL MOTOR RELAY INPUT SIGNAL CIRCUIT-II

1. Turn ignition switch OFF.
2. Disconnect ECM harness connector.
3. Disconnect IPDM E/R harness connector E8.
4. Check harness continuity between ECM terminal 3 and IPDM E/R terminal 42. Refer to Wiring Diagram.

Continuity should exist.

5. Also check harness for short to ground and short to power.

OK or NG

OK >> GO TO 5.
NG >> GO TO 4.

4. DETECT MALFUNCTIONING PART

Check the following.

- Harness connectors E19, F49
- Harness for open or short between ECM and IPDM E/R

>> Repair open circuit or short to ground or short to power in harness or connectors.

5. CHECK THROTTLE CONTROL MOTOR RELAY POWER SUPPLY CIRCUIT-I

1. Reconnect all harness connectors disconnected.
2. Turn ignition switch OFF.
3. Check voltage between ECM terminal 104 and ground with CONSULT-II or tester.

Voltage: Battery voltage

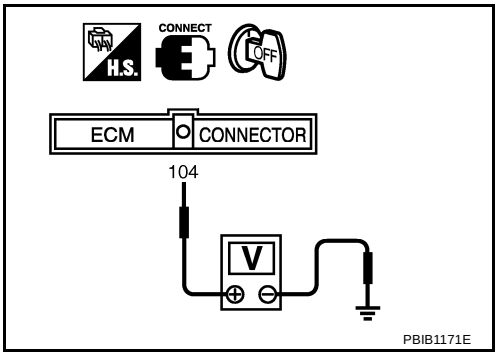

OK or NG

OK >> GO TO 9.
NG >> GO TO 6.

6. CHECK THROTTLE CONTROL MOTOR RELAY POWER SUPPLY CIRCUIT-II

1. Disconnect ECM harness connector.
2. Disconnect IPDM E/R harness connector E9.
3. Check harness continuity between ECM terminal 104 and IPDM E/R terminal 47.
   Refer to Wiring Diagram.

   Continuity should exist.

4. Also check harness for short to ground and short to power.

OK or NG

OK >> GO TO 8.
NG >> GO TO 7.

7. DETECT MALFUNCTIONING PART

Check the following.

- Harness connectors E211, M41
- Harness for open or short between ECM and IPDM E/R

>> Repair open circuit or short to ground or short to power in harness or connectors.

8. CHECK FUSE

1. Disconnect 15A fuse.
2. Check 15A fuse for blown.

OK or NG

OK >> GO TO 9.
NG >> Replace 15A fuse.

9. CHECK INTERMITTENT INCIDENT

Refer to EC-854, "TROUBLE DIAGNOSIS FOR INTERMITTENT INCIDENT" .

OK or NG

OK >> Replace IPDM E/R. Refer to PG-18, "IPDM E/R (INTELLIGENT POWER DISTRIBUTION MODULE ENGINE ROOM)" .
NG >> Repair or replace harness or connectors.

10. CHECK THROTTLE CONTROL MOTOR OUTPUT SIGNAL CIRCUIT FOR OPEN OR SHORT

1. Turn ignition switch OFF.
2. Disconnect electric throttle control actuator harness connector.
3. Disconnect ECM harness connector.
4. Check harness continuity between the following terminals.
   Refer to Wiring Diagram.

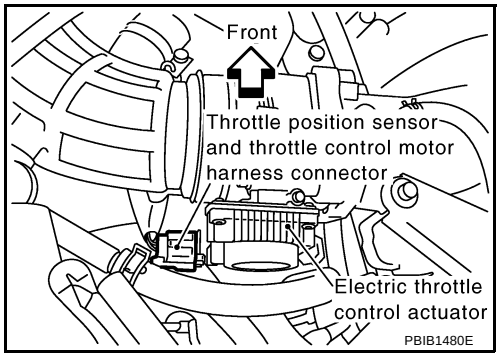

Electric throttle control actuator terminal	ECM terminal	Continuity
3	5	Should not exist
	4	Should exist
6	5	Should exist
	4	Should not exist

5. Also check harness for short to ground and short to power.

OK or NG

OK >> GO TO 11.
NG >> Repair or replace.

11. CHECK ELECTRIC THROTTLE CONTROL ACTUATOR VISUALLY

1. Remove the intake air duct.
2. Check if foreign matter is caught between the throttle valve and the housing.

OK or NG

OK >> GO TO 12.
NG >> Remove the foreign matter and clean the electric throttle control actuator inside.

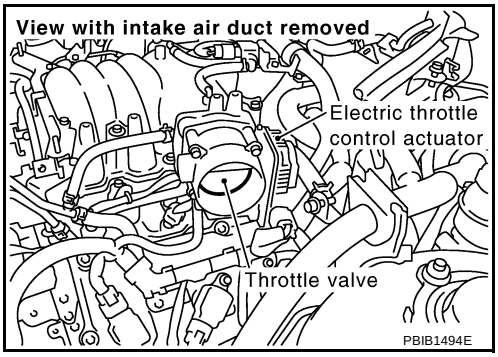

12. CHECK THROTTLE CONTROL MOTOR

Refer to EC-1155, "Component Inspection" .

OK or NG

OK >> GO TO 13.
NG >> GO TO 14.

13. CHECK INTERMITTENT INCIDENT

Refer to EC-854, "TROUBLE DIAGNOSIS FOR INTERMITTENT INCIDENT" .

OK or NG

OK >> GO TO 14.
NG >> Repair or replace harness or connectors.

14. REPLACE ELECTRIC THROTTLE CONTROL ACTUATOR

1. Replace the electric throttle control actuator.
2. Perform EC-786, "Throttle Valve Closed Position Learning" .
3. Perform EC-787, "Idle Air Volume Learning" .

>> **INSPECTION END**

Component Inspection

ABS007R1

THROTTLE CONTROL MOTOR

1. Disconnect electric throttle control actuator harness connector.
2. Check resistance between terminals 3 and 6.

Resistance: Approximately 1 - 15 Ω [at 25 °C (77°F)]

3. If NG, replace electric throttle control actuator and go to next step.
4. Perform EC-786, "Throttle Valve Closed Position Learning" .
5. Perform EC-787, "Idle Air Volume Learning" .

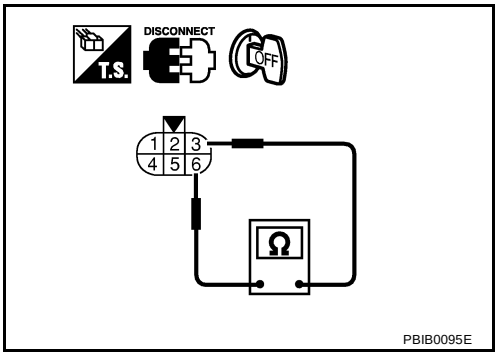

Removal and Installation

ABS007R2

ELECTRIC THROTTLE CONTROL ACTUATOR

Refer to EM-178, "INTAKE MANIFOLD" .

DTC P1124, P1126 THROTTLE CONTROL MOTOR RELAY

PFP:16119

Component Description

ABS007R3

Power supply for the throttle control motor is provided to the ECM via throttle control motor relay. The throttle control motor relay is ON/OFF controlled by the ECM. When the ignition switch is turned ON, the ECM sends an ON signal to throttle control motor relay and battery voltage is provided to the ECM. When the ignition switch is turned OFF, the ECM sends an OFF signal to throttle control motor relay and battery voltage is not provided to the ECM.

CONSULT-II Reference Value in Data Monitor Mode

ABS007R4

Specification data are reference values.

MONITOR ITEM	CONDITION	SPECIFICATION
THRTL RELAY	● Ignition switch: ON	ON

On Board Diagnosis Logic

ABS007R5

These self-diagnoses have the one trip detection logic.

DTC No.	Trouble diagnosis name	DTC detecting condition	Possible cause
P1124 1124	Throttle control motor relay circuit short	ECM detect the throttle control motor relay is stuck ON.	● Harness or connectors (Throttle control motor relay circuit is shorted) ● Throttle control motor relay
P1126 1126	Throttle control motor relay circuit open	ECM detects a voltage of power source for throttle control motor is excessively low.	● Harness or connectors (Throttle control motor relay circuit is open) ● Throttle control motor relay

FAIL-SAFE MODE

When the malfunction is detected, ECM enters fail-safe mode and the MIL lights up.

Engine operating condition in fail-safe mode
ECM stops the electric throttle control actuator control, throttle valve is maintained at a fixed opening (approx. 5 degrees) by the return spring.

DTC Confirmation Procedure

ABS007R6

NOTE:
If DTC Confirmation Procedure has been previously conducted, always turn ignition switch OFF and wait at least 10 seconds before conducting the next test.

PROCEDURE FOR DTC P1124

TESTING CONDITION:
Before performing the following procedure, confirm that battery voltage is more than 8V.

With CONSULT-II

1. Turn ignition switch ON and wait at least 1 second.
2. Select “DATA MONITOR” mode with CONSULT-II.
3. If DTC is detected, go to EC-1159, "Diagnostic Procedure" .

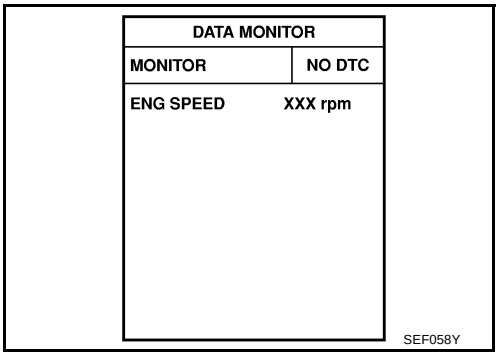

With GST

Follow the procedure “With CONSULT-II” above.

PROCEDURE FOR DTC P1126

With CONSULT-II

1. Turn ignition switch ON and wait at least 2 seconds.
2. Select “DATA MONITOR””mode with CONSULT-II.
3. Start engine and let it idle for 5 seconds.
4. If DTC is detected, go to EC-1159, "Diagnostic Procedure" .

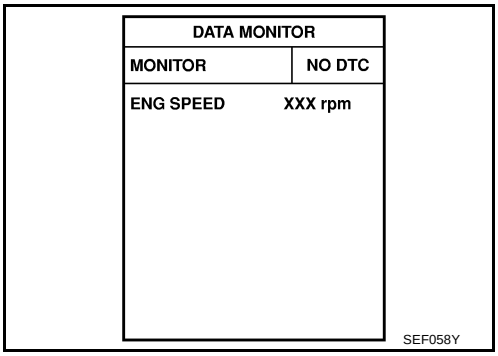

With GST

Follow the procedure “With CONSULT-II” above.

Wiring Diagram

ABS007R7

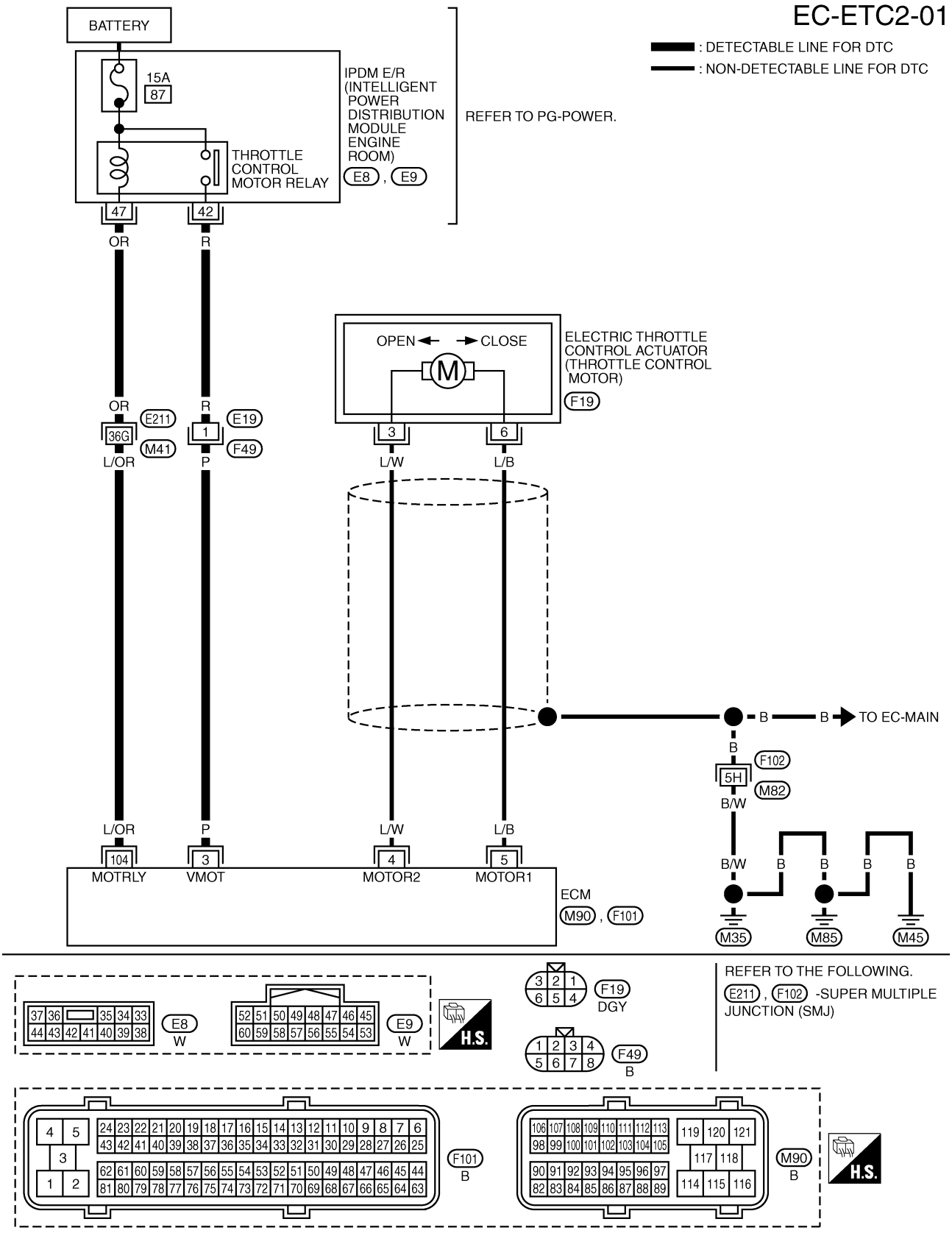

TBWM0416E

Specification data are reference values and are measured between each terminal and ground.

CAUTION:
Do not use ECM ground terminals when measuring input/output voltage. Doing so may result in damage to the ECM's transistor. Use a ground other than ECM terminals, such as the ground.

TERMINAL NO.	WIRE COLOR	ITEM	CONDITION	DATA (DC Voltage)
3	P	Throttle control motor relay power supply	**[Ignition switch: ON]**	BATTERY VOLTAGE (11 - 14V)
104	L/OR	Throttle control motor relay	**[Ignition switch: OFF]**	BATTERY VOLTAGE (11 - 14V)
			[Ignition switch: ON]	0 - 1.0V

Diagnostic Procedure

ABS007R8

1. CHECK THROTTLE CONTROL MOTOR RELAY POWER SUPPLY CIRCUIT-I

1. Turn ignition switch OFF.
2. Check voltage between ECM terminal 104 and ground with CONSULT-II or tester.

Voltage: Battery voltage

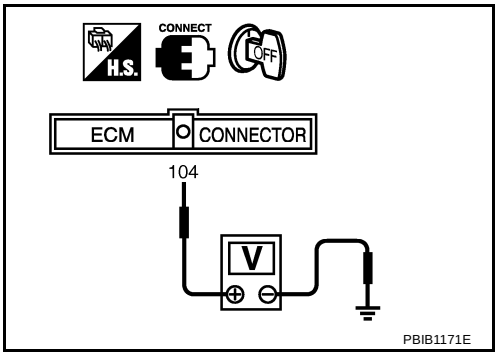

OK or NG

OK >> GO TO 5.
NG >> GO TO 2.

2. CHECK THROTTLE CONTROL MOTOR RELAY POWER SUPPLY CIRCUIT-II

1. Disconnect ECM harness connector.
2. Disconnect IPDM E/R harness connector E9.
3. Check continuity between ECM terminal 104 and IPDM E/R terminal 47.
   Refer to Wiring Diagram.

Continuity should exist.

4. Also check harness for short to ground and short to power.

OK or NG

OK >> GO TO 4.
NG >> GO TO 3.

3. DETECT MALFUNCTIONING PART

Check the following.

- Harness connectors E211, M41
- Harness for open or short between ECM and IPDM E/R

>> Repair open circuit or short to ground or short to power in harness or connectors.

4. CHECK FUSE

1. Disconnect 15A fuse.
2. Check 15A fuse for blown.

OK or NG

OK >> GO TO 8.
NG >> Replace 15A fuse.

5. CHECK THROTTLE CONTROL MOTOR RELAY INPUT SIGNAL CIRCUIT-I

1. Check voltage between ECM terminal 3 and ground under the following conditions with CONSULT-II or tester.

Ignition switch	Voltage
OFF	Approximately 0V
ON	Battery voltage (11 - 14V)

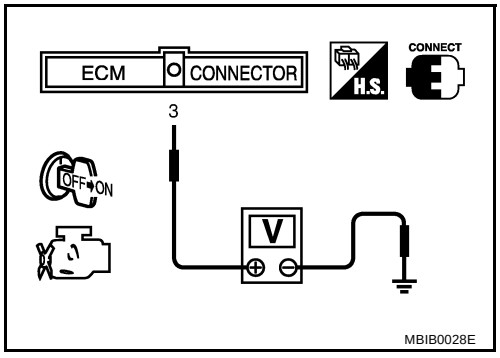

OK or NG

OK >> GO TO 8.
NG >> GO TO 6.

6. CHECK THROTTLE CONTROL MOTOR RELAY INPUT SIGNAL CIRCUIT-II

1. Turn ignition switch OFF.
2. Disconnect ECM harness connector.
3. Disconnect IPDM E/R harness connector E8.
4. Check continuity between ECM terminal 3 and IPDM E/R terminal 42. Refer to Wiring Diagram.

Continuity should exist.

5. Also check harness for short to ground and short to power.

OK or NG

OK >> GO TO 8.
NG >> GO TO 7.

7. DETECT MALFUNCTIONING PART

Check the following.

- Harness connectors E19, F49
- Harness for open or short between ECM and IPDM E/R

>> Repair open circuit or short to ground or short to power in harness or connectors.

8. CHECK INTERMITTENT INCIDENT

Refer to EC-854, "TROUBLE DIAGNOSIS FOR INTERMITTENT INCIDENT" .

OK or NG

OK >> Replace IPDM E/R. Refer to PG-18, "IPDM E/R (INTELLIGENT POWER DISTRIBUTION MODULE ENGINE ROOM)" .
NG >> Repair or replace harness or connectors.

DTC P1128 THROTTLE CONTROL MOTOR

PFP:16119

Component Description

ABS007R9

The throttle control motor is operated by the ECM and it opens and closes the throttle valve.
The current opening angle of the throttle valve is detected by the throttle position sensor and it provides feedback to the ECM to control the throttle control motor to make the throttle valve opening angle properly in response to driving condition.

On Board Diagnosis Logic

ABS007RA

This self-diagnosis has the one trip detection logic.

DTC No.	Trouble diagnosis name	DTC detecting condition	Possible cause
P1128 1128	Throttle control motor circuit short	ECM detects short in both circuits between ECM and throttle control motor.	● Harness or connectors (Throttle control motor circuit is shorted.) ● Electric throttle control actuator (Throttle control motor)

FAIL-SAFE MODE

When the malfunction is detected, ECM enters fail-safe mode and the MIL lights up.

Engine operating condition in fail-safe mode
ECM stops the electric throttle control actuator control, throttle valve is maintained at a fixed opening (approx. 5 degrees) by the return spring.

DTC Confirmation Procedure

ABS007RB

NOTE:
If DTC Confirmation Procedure has been previously conducted, always turn ignition switch OFF and wait at least 10 seconds before conducting the next test.

WITH CONSULT-II

1. Turn ignition switch ON and wait at least 2 seconds.
2. Select “DATA MONITOR” mode with CONSULT-II.
3. Start engine and let it idle for 5 seconds.
4. If DTC is detected, go to EC-1163, "Diagnostic Procedure" .

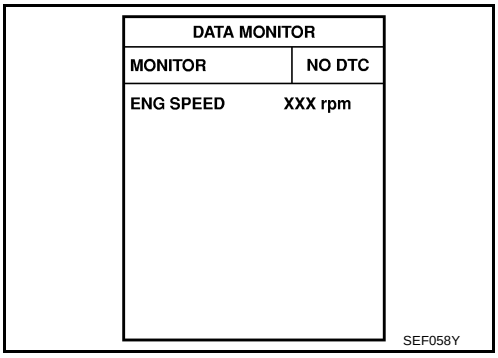

WITH GST

Follow the procedure “WITH CONSULT-II” above.

Wiring Diagram

ABS007RC

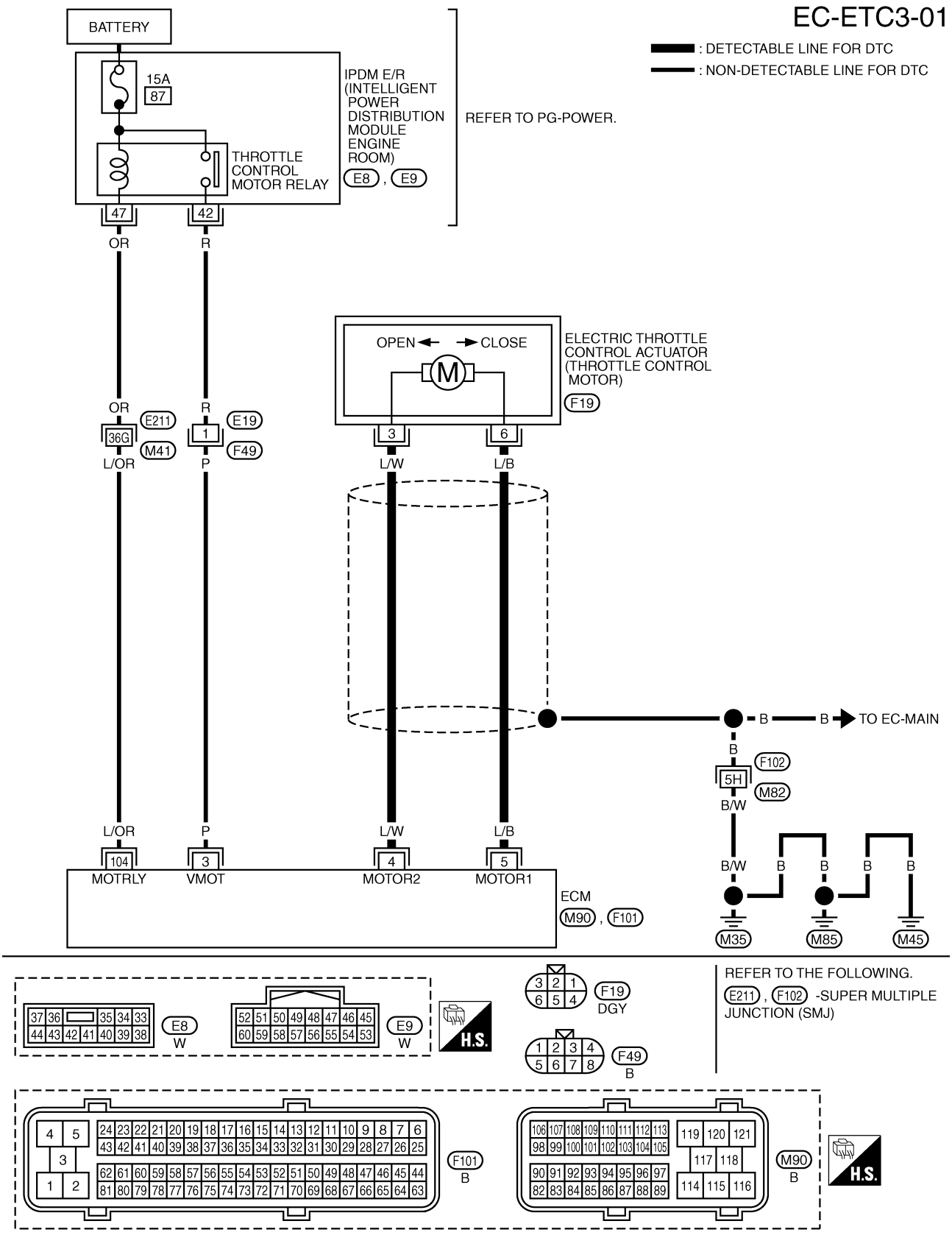

Specification data are reference values and are measured between each terminal and ground.
Pulse signal is measured by CONSULT-II.

CAUTION:
Do not use ECM ground terminals when measuring input/output voltage. Doing so may result in damage to the ECM's transistor. Use a ground other than ECM terminals, such as the ground.

TERMINAL NO.	WIRE COLOR	ITEM	CONDITION	DATA (DC Voltage)
4	L/W	Throttle control motor (Close)	**[Ignition switch: ON]** ● Engine stopped ● Selector lever: D ● Accelerator pedal: Released	0 - 14V★ 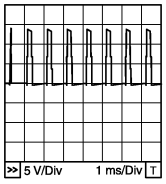 PBIB1104E
5	L/B	Throttle control motor (Open)	**[Ignition switch: ON]** ● Engine stopped ● Selector lever: D ● Accelerator pedal: Fully depressed	0 - 14V★ 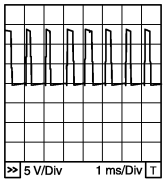 PBIB1105E

★: Average voltage for pulse signal (Actual pulse signal can be confirmed by oscilloscope.)

Diagnostic Procedure

ABS007RD

1. CHECK GROUND CONNECTIONS

1. Turn ignition switch OFF.
2. Loosen and retighten three ground screws on the body.
   Refer to EC-861, "Ground Inspection" .

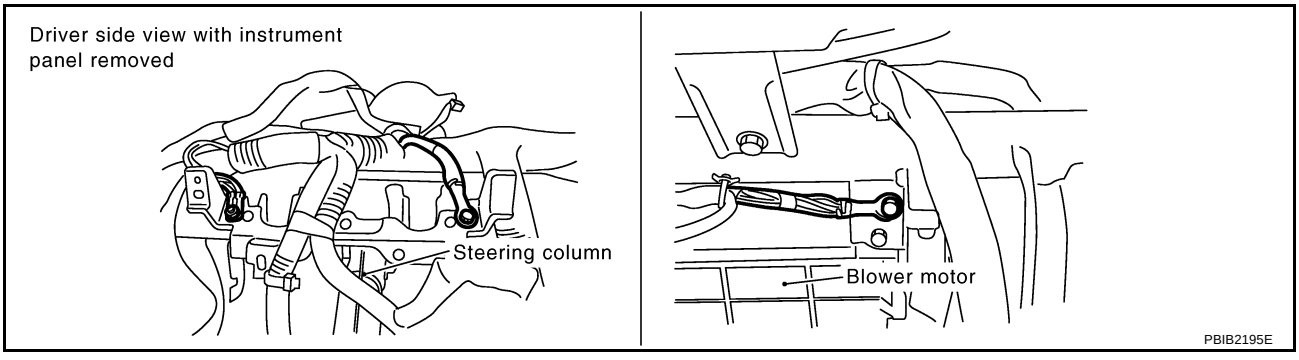

OK or NG

OK >> GO TO 2.
NG >> Repair or replace ground connections.

2. CHECK THROTTLE CONTROL MOTOR OUTPUT SIGNAL CIRCUIT FOR OPEN OR SHORT

1. Disconnect electric throttle control actuator harness connector.
2. Disconnect ECM harness connector.
3. Check harness continuity between the following terminals. Refer to Wiring Diagram.

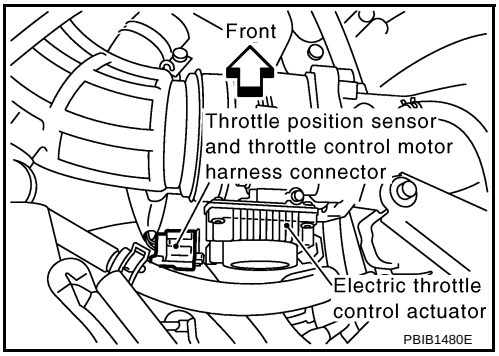

Electric throttle control actuator terminal	ECM terminal	Continuity
3	5	Should not exist
	4	Should exist
6	5	Should exist
	4	Should not exist

4. Also check harness for short to ground and short to power.

OK or NG

OK >> GO TO 3.
NG >> Repair or replace.

3. CHECK THROTTLE CONTROL MOTOR

Refer to EC-1164, "Component Inspection" .

OK or NG

OK >> GO TO 4.
NG >> GO TO 5.

4. CHECK INTERMITTENT INCIDENT

Refer to EC-854, "TROUBLE DIAGNOSIS FOR INTERMITTENT INCIDENT" .

OK or NG

OK >> GO TO 5.
NG >> Repair or replace harness or connectors.

5. REPLACE ELECTRIC THROTTLE CONTROL ACTUATOR

1. Replace the electric throttle control actuator.
2. Perform EC-786, "Throttle Valve Closed Position Learning" .
3. Perform EC-787, "Idle Air Volume Learning" .

>> **INSPECTION END**

Component Inspection

ABS007RE

THROTTLE CONTROL MOTOR

1. Disconnect electric throttle control actuator harness connector.
2. Check resistance between terminals 3 and 6.

Resistance: Approximately 1 - 15 Ω [at 25 °C (77°F)]

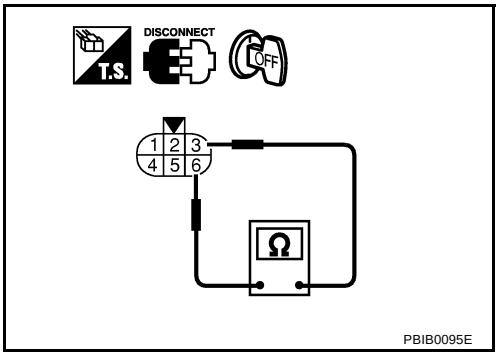

3. If NG, replace electric throttle control actuator and go to next step.
4. Perform EC-786, "Throttle Valve Closed Position Learning" .
5. Perform EC-787, "Idle Air Volume Learning" .

Removal and Installation

ABS007RF

ELECTRIC THROTTLE CONTROL ACTUATOR

Refer to EM-178, "INTAKE MANIFOLD" .

DTC P1140, P1145 IVT CONTROL POSITION SENSOR

PFP:23731

Component Description

ABS008G4

Intake valve timing control position sensors are located in the front of cylinder heads in both bank 1 and bank 2.
This sensor uses a Hall IC.
The cam position is determined by the intake primary cam sprocket concave (in four places). The ECM provides feedback to the intake valve timing control for appropriate target valve open-close timing according to drive conditions based on detected cam position.

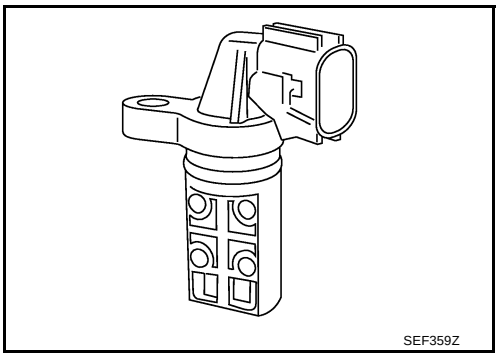

CONSULT-II Reference Value in Data Monitor Mode

ABS008G5

Specification data are reference values.

MONITOR ITEM	CONDITION		SPECIFICATION
INT/V TIM (B1) INT/V TIM (B2)	● Engine: After warming up ● Selector lever: P or N ● Air conditioner switch: OFF ● No load	Idle	–5° - 5°CA
		2,000 rpm	Approx. 0° - 20°CA

On Board Diagnosis Logic

ABS008G6

DTC No.	Trouble diagnosis name	DTC detecting condition	Possible cause
P1140 1140 (bank 1)	Intake valve timing control position sensor circuit	An excessively high or low voltage from the sensor is sent to ECM.	● Harness or connectors (Intake valve timing control position sensor circuit is open or shorted) ● Intake valve timing control position sensor ● Crankshaft position sensor (POS) ● Camshaft position sensor (PHASE) ● Accumulation of debris to the signal pick-up portion of the camshaft sprocket
P1145 1145 (bank 2)			

DTC Confirmation Procedure

ABS008G7

NOTE:
If DTC Confirmation Procedure has been previously conducted, always turn ignition switch OFF and wait at least 10 seconds before conducting the next test.

WITH CONSULT-II

1. Turn ignition switch ON.
2. Select “DATA MONITOR” mode with CONSULT-II.
3. Maintain the following conditions for at least 10 seconds.

ENG SPEED	More than idle speed
Selector lever	P or N position

4. If 1st trip DTC is detected, go to EC-1170, "Diagnostic Procedure" .

WITH GST

Follow the procedure “WITH CONSULT-II” above.

Wiring Diagram
BANK 1

ABS008G8

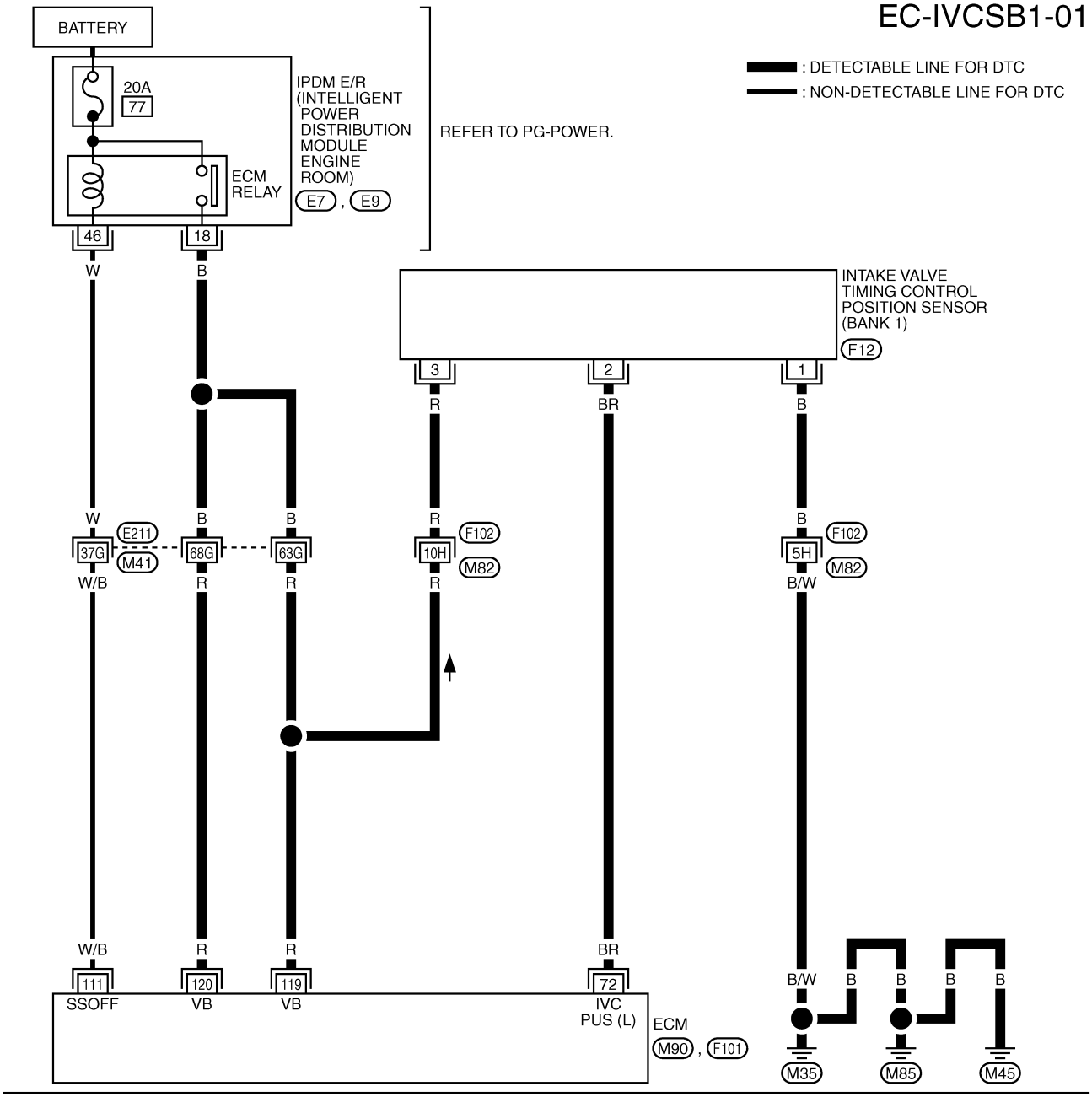

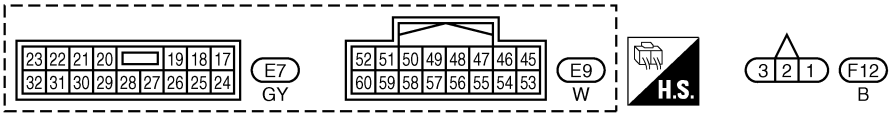

REFER TO THE FOLLOWING.
E211 , F102 -SUPER MULTIPLE JUNCTION (SMJ)

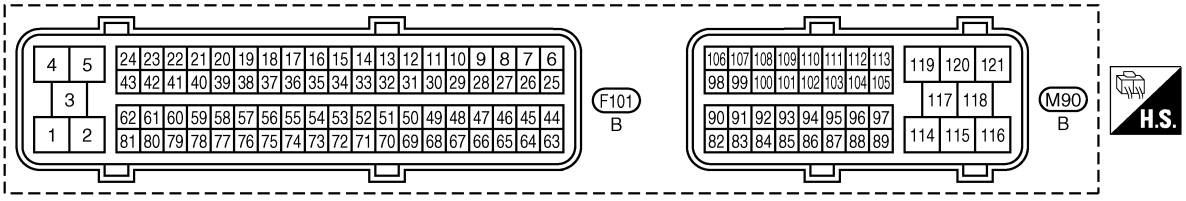

TBWM0418E

Specification data are reference values and are measured between each terminal and ground.
Pulse signal is measured by CONSULT-II.

CAUTION:

Do not use ECM ground terminals when measuring input/output voltage. Doing so may result in damage to the ECM's transistor. Use a ground other than ECM terminals, such as the ground.

TERMINAL NO.	WIRE COLOR	ITEM	CONDITION	DATA (DC Voltage)
72	BR	Intake valve timing control position sensor (bank 1)	**[Engine is running]** ● **Warm-up condition** ● Idle speed	0 - 1.0V
			[Engine is running] ● Engine speed: 2,000rpm	0 - 1.0V★ 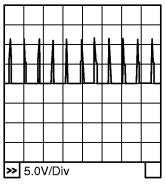 PBIB2046E

★: Average voltage for pulse signal (Actual pulse signal can be confirmed by oscilloscope.)

BANK 2

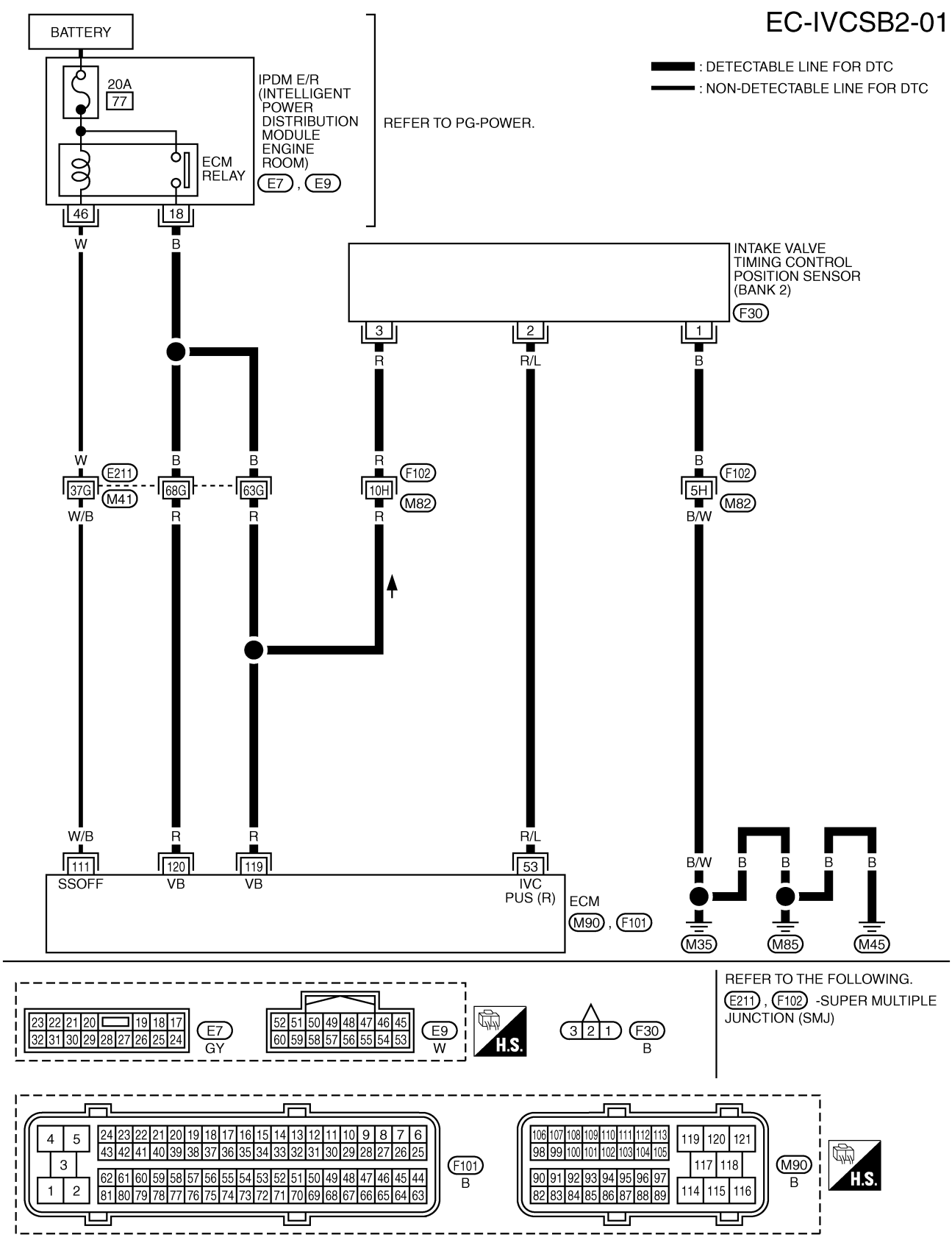

TBWM0419E

Specification data are reference values and are measured between each terminal and ground.
Pulse signal is measured by CONSULT-II.

CAUTION:
Do not use ECM ground terminals when measuring input/output voltage. Doing so may result in damage to the ECM's transistor. Use a ground other than ECM terminals, such as the ground.

TERMINAL NO.	WIRE COLOR	ITEM	CONDITION	DATA (DC Voltage)
53	R/L	Intake valve timing control position sensor (bank 2)	**[Engine is running]** ● **Warm-up condition** ● Idle speed	0 - 1.0V
			[Engine is running] ● Engine speed: 2,000 rpm	0 - 1.0V★ 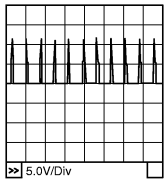 PBIB2046E

★: Average voltage for pulse signal (Actual pulse signal can be confirmed by oscilloscope.)

Diagnostic Procedure

ABS008G9

1. CHECK GROUND CONNECTIONS

1. Turn ignition switch OFF.
2. Loosen and retighten three ground screws on the body.
   Refer to EC-861, "Ground Inspection" .

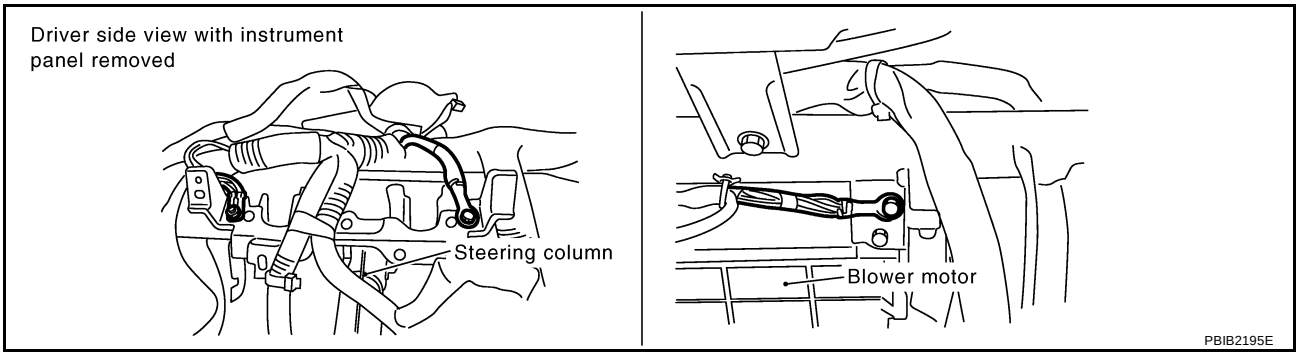

OK or NG

OK >> GO TO 2.
NG >> Repair or replace ground connections.

2. CHECK INTAKE VALVE TIMING CONTROL POSITION SENSOR POWER SUPPLY CIRCUIT

1. Disconnect intake valve timing control position sensor harness connector.

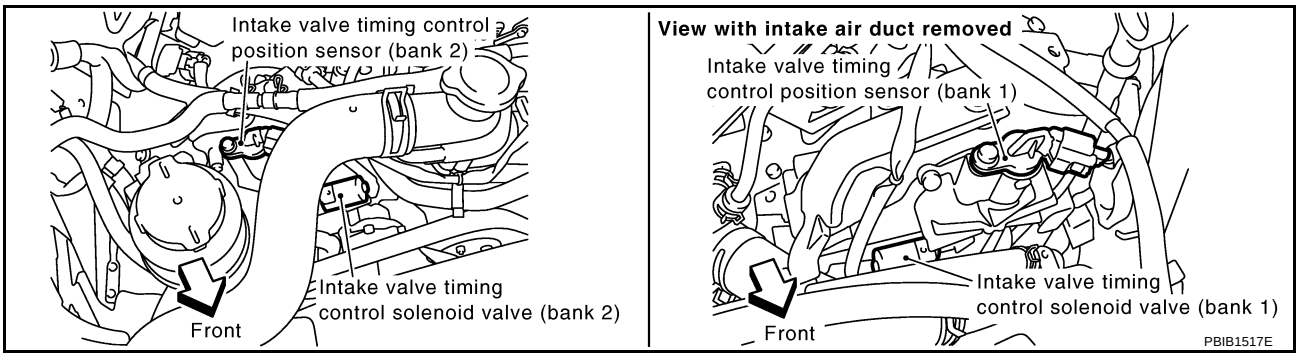

2. Turn ignition switch ON.
3. Check voltage between intake valve timing control position sensor terminal 3 and ground with CONSULT-II or tester.

Voltage: Battery voltage

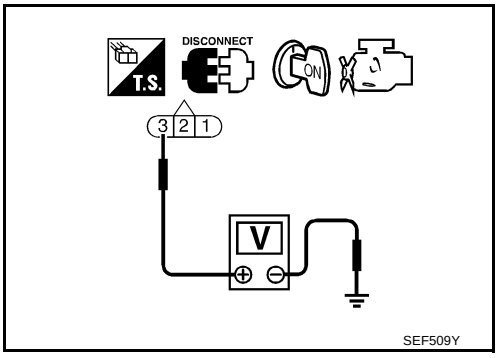

OK or NG

OK >> GO TO 4.
NG >> GO TO 3.

3. DETECT MALFUNCTIONING PART

Check the following.

- Harness connectors E211, M41
- Harness connectors F102, M82
- Harness for open or short between intake valve timing control position sensor and IPDM E/R
- Harness for open or short between intake valve timing control position sensor and ECM

>> Repair open circuit or short to ground or short to power in harness or connectors.

4. CHECK INTAKE VALVE TIMING CONTROL POSITION SENSOR GROUND CIRCUIT FOR OPEN AND SHORT

1. Turn ignition switch OFF.
2. Check harness continuity between intake valve timing control position sensor terminal 1 and ground. Refer to Wiring Diagram.

Continuity should exist.

3. Also check harness for short to power.

OK or NG

OK >> GO TO 6.
NG >> GO TO 5.

5. DETECT MALFUNCTIONING PART

Check the following.

- Harness connectors F102, M82
- Harness for open or short between intake valve timing control position sensor and ground

>> Repair open circuit or short to power in harness or connectors.

6. CHECK INTAKE VALVE TIMING CONTROL POSITION SENSOR INPUT SIGNAL CIRCUIT FOR OPEN AND SHORT

1. Disconnect ECM harness connector.
2. Check harness continuity between the following;
   ECM terminal 72 and intake valve timing control position sensor (bank 1) terminal 2 or
   ECM terminal 53 and intake valve timing control position sensor (bank 2) terminal 2.
   Refer to Wiring Diagram.

   Continuity should exist.
3. Also check harness for short to ground and short to power.

OK or NG

OK >> GO TO 7.
NG >> Repair open circuit or short to ground or short to power in harness or connectors.

7. CHECK INTAKE VALVE TIMING CONTROL POSITION SENSOR

Refer to EC-1173, "Component Inspection" .

OK or NG

OK >> GO TO 8.
NG >> Replace intake valve timing control position sensor.

8. CHECK CRANKSHAFT POSITION SENSOR (POS)

Refer to EC-1042, "Component Inspection" .

OK or NG

OK >> GO TO 9.
NG >> Replace crankshaft position sensor (POS).

9. CHECK CAMSHAFT POSITION SENSOR (PHASE)

Refer to EC-1049, "Component Inspection" .

OK or NG

OK >> GO TO 10.
NG >> Replace camshaft position sensor (PHASE).

10. CHECK CAMSHAFT SPROCKET

Check accumulation of debris to the signal pick-up portion of the camshaft sprocket. Refer to EM-200, "TIMING CHAIN" .

OK or NG

OK >> GO TO 11.
NG >> Remove debris and clean the signal pick-up cutout of camshaft sprocket.

11. CHECK INTERMITTENT INCIDENT

Refer to EC-854, "TROUBLE DIAGNOSIS FOR INTERMITTENT INCIDENT" .

>> **INSPECTION END**

Component Inspection

ABS008GA

INTAKE VALVE TIMING CONTROL POSITION SENSOR

1. Disconnect intake valve timing control position sensor harness connector.
2. Loosen the fixing bolt of the sensor.
3. Remove the sensor.
4. Visually check the sensor for chipping.

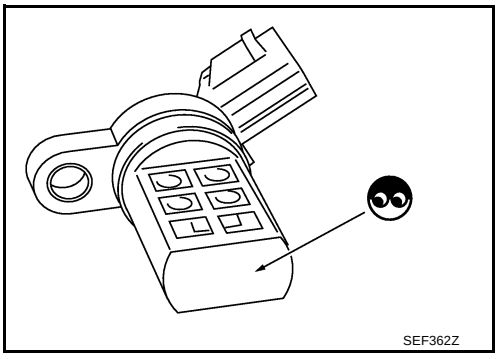

5. Check resistance as shown below.

Terminal No. (Polarity)	Resistance Ω [at 25°C (77°F)]
3 (+) - 1 (-)	Except 0 or ∞
2 (+) - 1 (-)	
3 (+) - 2 (-)	

6. If NG, replace intake valve timing control position sensor.

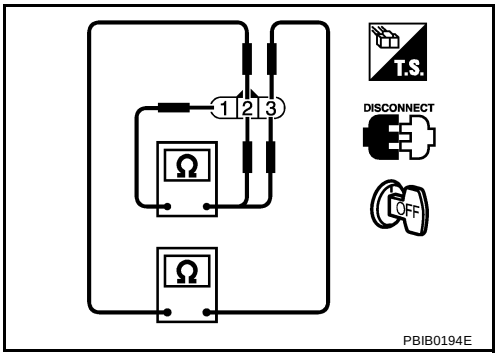

Removal and Installation

ABS008GB

INTAKE VALVE TIMING CONTROL POSITION SENSOR

Refer to EM-200, "TIMING CHAIN" .

DTC P1143, P1163 HO2S1

PFP:22690

Component Description

ABS007RG

The heated oxygen sensor 1 is placed into the exhaust manifold. It detects the amount of oxygen in the exhaust gas compared to the outside air. The heated oxygen sensor 1 has a closed-end tube made of ceramic zirconia. The zirconia generates voltage from approximately 1V in richer conditions to 0V in leaner conditions. The heated oxygen sensor 1 signal is sent to the ECM. The ECM adjusts the injection pulse duration to achieve the ideal air-fuel ratio. The ideal air-fuel ratio occurs near the radical change from 1 to 0V.

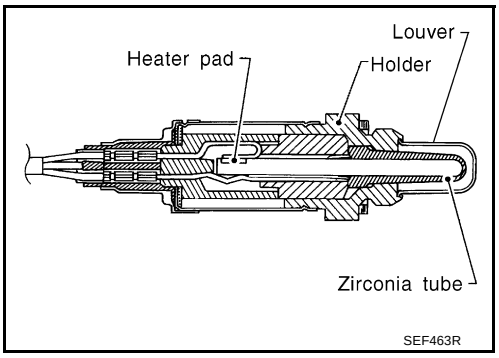

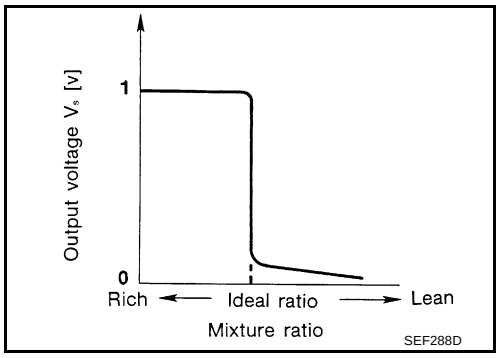

CONSULT-II Reference Value in Data Monitor Mode

ABS007RH

Specification data are reference values.

MONITOR ITEM	CONDITION		SPECIFICATION
HO2S1 (B1) HO2S1 (B2)	● Engine: After warming up	Maintaining engine speed at 2,000 rpm	0 - 0.3V ←→ Approx. 0.6 - 1.0V
HO2S1 MNTR (B1) HO2S1 MNTR (B2)			LEAN ←→ RICH Changes more than 5 times during 10 seconds.

On Board Diagnosis Logic

ABS007RI

To judge the malfunction, the output from the heated oxygen sensor 1 is monitored to determine whether the rich output is sufficiently high and whether the lean output is sufficiently low. When both the outputs are shifting to the lean side, the malfunction will be detected.

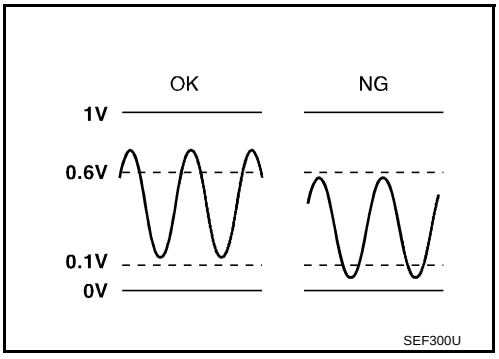

DTC No.	Trouble diagnosis name	DTC detecting condition	Possible cause
P1143 1143 (Bank 1)	Heated oxygen sensor 1 lean shift monitoring	The maximum and minimum voltage from the sensor are not reached to the specified voltages.	● Heated oxygen sensor 1 ● Heated oxygen sensor 1 heater ● Fuel pressure ● Fuel injector ● Intake air leaks
P1163 1163 (Bank 2)			

DTC Confirmation Procedure

ABS007RJ

CAUTION:

Always drive vehicle at a safe speed.

NOTE:

If DTC Confirmation Procedure has been previously conducted, always turn ignition switch OFF and wait at least 10 seconds before conducting the next test.

TESTING CONDITION:

- **Always perform at a temperature above –10°C (14°F).**
- **Before performing following procedure, confirm that battery voltage is more than 11V at idle.**

WITH CONSULT-II

1. Start engine and warm it up to normal operating temperature.
2. Stop engine and wait at least 10 seconds.
3. Turn ignition switch ON and select “HO2S1 (B1) P1143” of “HO2S1” or “HO2S1 (B2) P1163” of “HO2S1” in “DTC WORK SUPPORT” mode with CONSULT-II.
4. Touch “START”.
5. Start engine and let it idle for at least 3 minutes.

   NOTE:
   Do not raise engine speed above 3,000 rpm after this step. If the engine speed limit is exceeded, return to step 5.

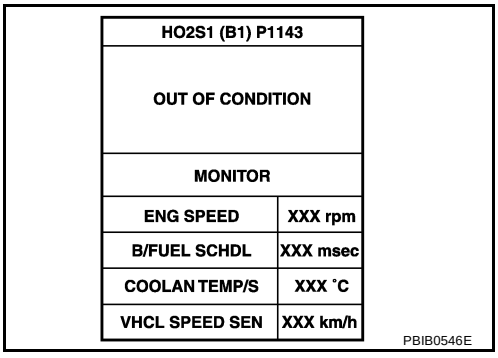

6. When the following conditions are met, “TESTING” will be displayed on the CONSULT-II screen. Maintain the conditions continuously until “TESTING” changes to “COMPLETED”. (It will take approximately 40 seconds or more.)

ENG SPEED	1,200 - 2,500 rpm
Vehicle speed	Less than 100 km/h (62 MPH)
B/FUEL SCHDL	1.7 - 12.0 msec
Selector lever	Suitable position

   If “TESTING” is not displayed after 5 minutes, retry from step 2.

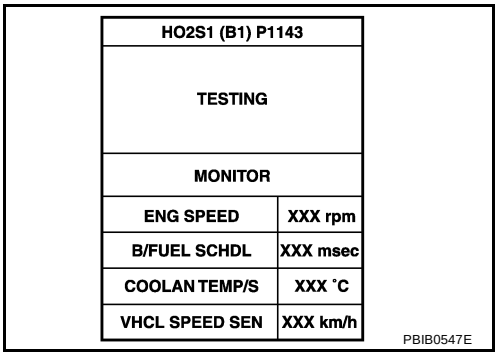

7. Make sure that “OK” is displayed after touching “SELF-DIAG RESULTS”. If “NG” is displayed, refer to EC-1176, "Diagnostic Procedure" .

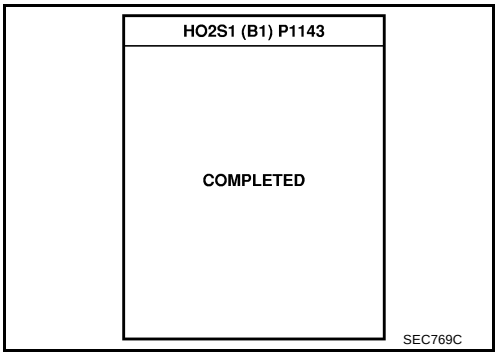

Overall Function Check

ABS007RK

Use this procedure to check the overall function of the heated oxygen sensor 1 circuit. During this check, a 1st trip DTC might not be confirmed.

WITH GST

1. Start engine and warm it up to normal operating temperature.
2. Set voltmeter probes between ECM terminal 16 [HO2S1(B1) signal] or 35 [HO2S1(B2) signal] and ground.
3. Check one of the following with engine speed held at 2,000 rpm constant under no load.
   - The maximum voltage is over 0.6V at least 1 time.
   - The minimum voltage is over 0.1V at least 1 time.
4. If NG, go to EC-1176, "Diagnostic Procedure" .

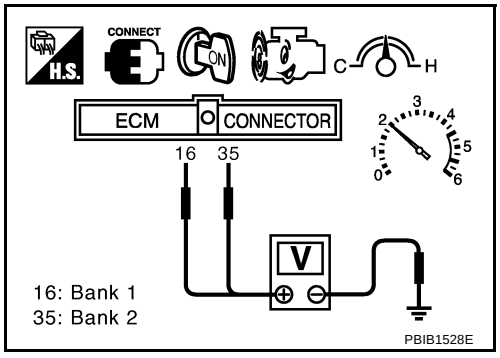

Diagnostic Procedure

ABS007RL

1. CHECK GROUND CONNECTIONS

1. Turn ignition switch OFF.
2. Loosen and retighten three ground screws on the body.
   Refer to EC-861, "Ground Inspection" .

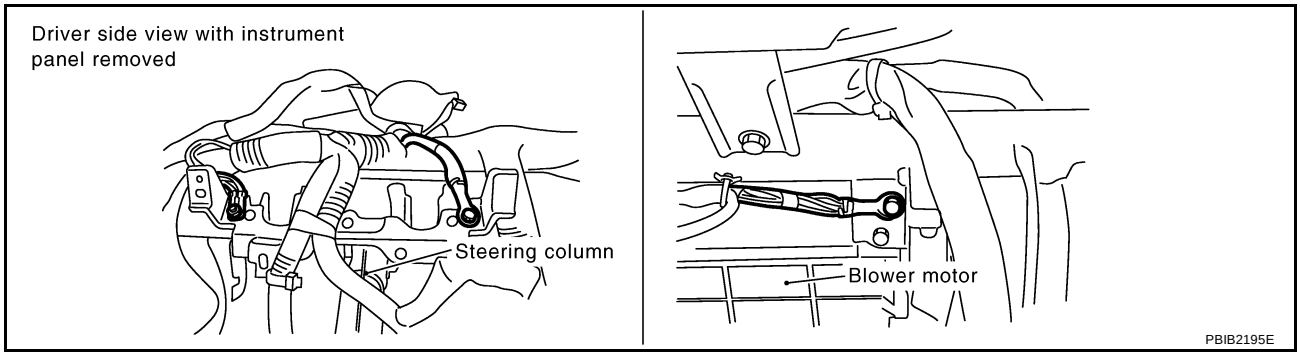

OK or NG

OK >> GO TO 2.
NG >> Repair or replace ground connections.

2. RETIGHTEN HEATED OXYGEN SENSOR 1

Loosen and retighten corresponding heated oxygen sensor 1.

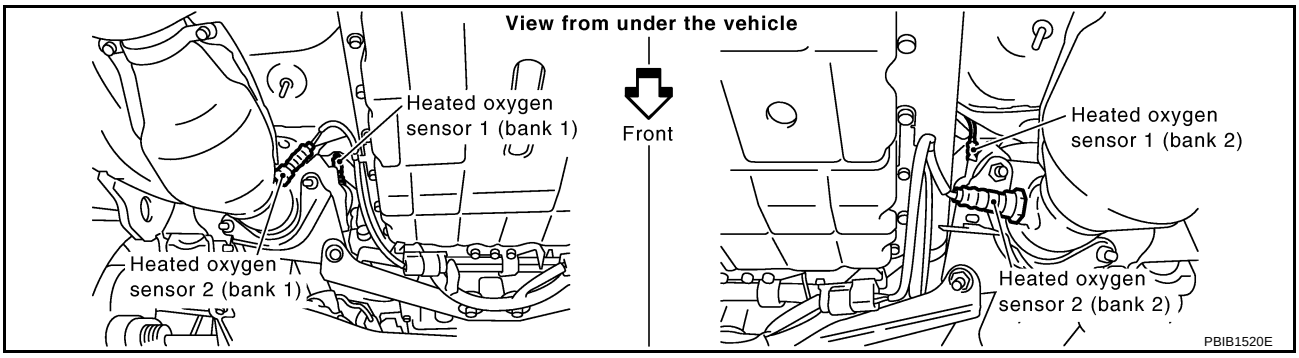

Tightening torque: 50 N·m (5.1 kg-m, 37 ft-lb)

>> GO TO 3.

3. CLEAR THE SELF-LEARNING DATA

With CONSULT-II

1. Start engine and warm it up to normal operating temperature.
2. Select “SELF-LEARNING CONT” in “WORK SUPPORT” mode with CONSULT-II.
3. Clear the self-learning control coefficient by touching “CLEAR”.
4. Run engine for at least 10 minutes at idle speed.
   Is the 1st trip DTC P0171 or P0174 detected?
   Is it difficult to start engine?

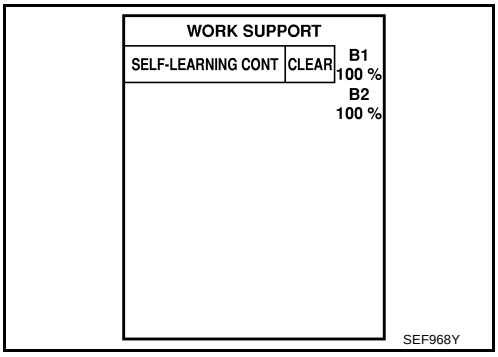

Without CONSULT-II

1. Start engine and warm it up to normal operating temperature.
2. Turn ignition switch OFF.
3. Disconnect mass air flow sensor harness connector, and restart and run engine for at least 5 seconds at idle speed.
4. Stop engine and reconnect mass air flow sensor harness connector.
5. Make sure DTC P0102 is displayed.
6. Erase the DTC memory. Refer to EC-758, "HOW TO ERASE EMISSION-RELATED DIAGNOSTIC INFORMATION" .
7. Make sure DTC P0000 is displayed.
8. Run engine for at least 10 minutes at idle speed.
   Is the 1st trip DTC P0171 or P0174 detected?
   Is it difficult to start engine?

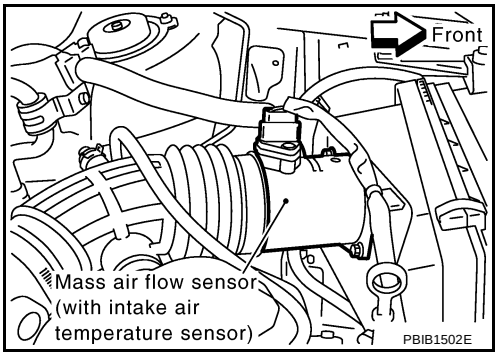

Yes or No

Yes >> Perform trouble diagnosis for DTC P0171, P0174. Refer to EC-986 .
No >> GO TO 4.

4. CHECK HEATED OXYGEN SENSOR 1 HEATER

Refer to EC-884, "Component Inspection" .

OK or NG

OK >> GO TO 5.
NG >> Replace malfunctioning heated oxygen sensor 1.

5. CHECK HEATED OXYGEN SENSOR 1

Refer to EC-1178, "Component Inspection" .

OK or NG

OK >> GO TO 6.
NG >> Replace malfunctioning heated oxygen sensor 1.

6. CHECK INTERMITTENT INCIDENT

Refer to EC-854, "TROUBLE DIAGNOSIS FOR INTERMITTENT INCIDENT" .
For circuit, refer to EC-937, "Wiring Diagram" .

>> **INSPECTION END**

Component Inspection

ABS007RM

HEATED OXYGEN SENSOR 1

With CONSULT-II

1. Start engine and warm it up to normal operating temperature.
2. Select “MANU TRIG” and adjust “TRIGGER POINT” to 100% in “DATA MONITOR” mode with CONSULT-II.
3. Select “HO2S1 (B1)/(B2)” and “HO2S1 MNTR (B1)/(B2)”.
4. Hold engine speed at 2,000 rpm under no load during the following steps.
5. Touch “RECORD” on CONSULT-II screen.

DATA MONITOR	
MONITOR	NO DTC
ENG SPEED	XXX rpm
MAS A/F SE-B1	XXX V
COOLAN TEMP/S	XXX °C
HO2S1 (B1)	XXX V
HO2S1 MNTR (B1)	LEAN

SEF646Y

6. Check the following.
   - “HO2S1 MNTR (B1)/(B2)” in “DATA MONITOR” mode changes from “RICH” to “LEAN” to “RICH” more than 5 times in 10 seconds.
     5 times (cycles) are counted as shown at right.
   - “HO2S1 (B1)/(B2)” voltage goes above 0.6V at least once.
   - “HO2S1 (B1)/(B2)” voltage goes below 0.3V at least once.
   - “HO2S1 (B1)/(B2)” voltage never exceeds 1.0V.

Bank 1

cycle	1	2	3	4	5
HO2S1 MNTR (B1)	R-L-R-L-R-L-R-L-R-L-R				

Bank 2

cycle	1	2	3	4	5
HO2S1 MNTR (B2)	R-L-R-L-R-L-R-L-R-L-R				

R means HO2S1 MNTR (B1)/(B2) indicates RICH

L means HO2S1 MNTR (B1)/(B2) indicates LEAN

SEF647Y

Trigger	ENG SPEED	HO2S1 (B1)
	rpm	V
XXX	XXX	XXX
XXX	XXX	XXX
XXX	XXX	XXX
XXX	XXX	XXX
XXX	XXX	XXX
XXX	XXX	XXX
XXX	XXX	XXX
XXX	XXX	XXX
XXX	XXX	XXX
XXX	XXX	XXX
XXX	XXX	XXX
XXX	XXX	XXX

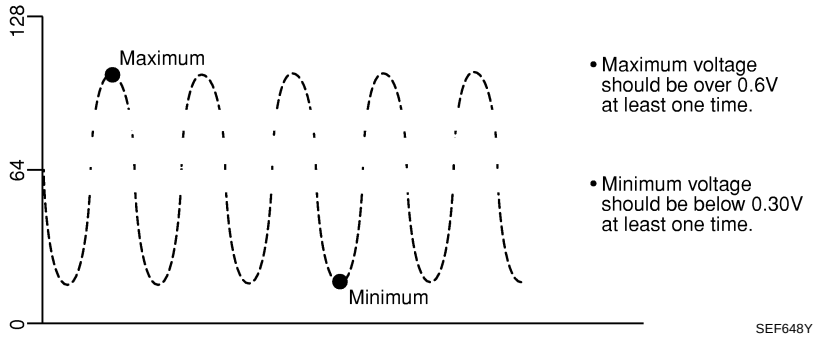

CAUTION:

- **Discard any heated oxygen sensor which has been dropped from a height of more than 0.5 m (19.7 in) onto a hard surface such as a concrete floor; use a new one.**
- **Before installing new oxygen sensor, clean exhaust system threads using Oxygen Sensor Thread Cleaner tool J-43897-18 or J-43897-12 and approved anti-seize lubricant.**

Without CONSULT-II

1. Start engine and warm it up to normal operating temperature.
2. Set voltmeter probes between ECM terminal 16 [HO2S1 (B1) signal] or 35 [HO2S1 (B2) signal] and ground.
3. Check the following with engine speed held at 2,000 rpm constant under no load.
   - The voltage fluctuates between 0 to 0.3V and 0.6 to 1.0V more than 5 times within 10 seconds.
   - The maximum voltage is over 0.6V at least 1 time.
   - The minimum voltage is below 0.3V at least 1 time.
   - The voltage never exceeds 1.0V.

   1 time: 0 - 0.3V → 0.6 - 1.0V → 0 - 0.3V
   2 times: 0 - 0.3V → 0.6 - 1.0V → 0 - 0.3V → 0.6 - 1.0V → 0 - 0.3V

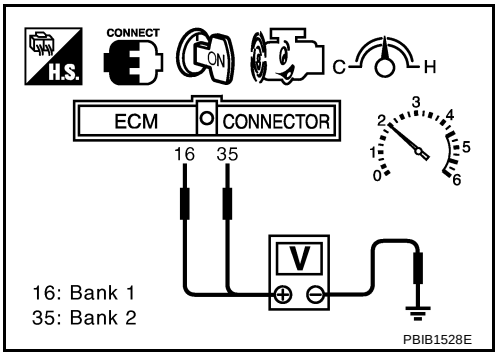

CAUTION:

- **Discard any heated oxygen sensor which has been dropped from a height of more than 0.5 m (19.7 in) onto a hard surface such as a concrete floor; use a new one.**
- **Before installing new oxygen sensor, clean exhaust system threads using Oxygen Sensor Thread Cleaner tool J-43897-18 or J-43897-12 and approved anti-seize lubricant.**

Removal and Installation

ABS007RN

HEATED OXYGEN SENSOR 1

Refer to EM-182, "EXHAUST MANIFOLD AND THREE WAY CATALYST" .

DTC P1144, P1164 HO2S1

PFP:22690

Component Description

ABS007RO

The heated oxygen sensor 1 is placed into the exhaust manifold. It detects the amount of oxygen in the exhaust gas compared to the outside air. The heated oxygen sensor 1 has a closed-end tube made of ceramic zirconia. The zirconia generates voltage from approximately 1V in richer conditions to 0V in leaner conditions. The heated oxygen sensor 1 signal is sent to the ECM. The ECM adjusts the injection pulse duration to achieve the ideal air-fuel ratio. The ideal air-fuel ratio occurs near the radical change from 1 to 0V.

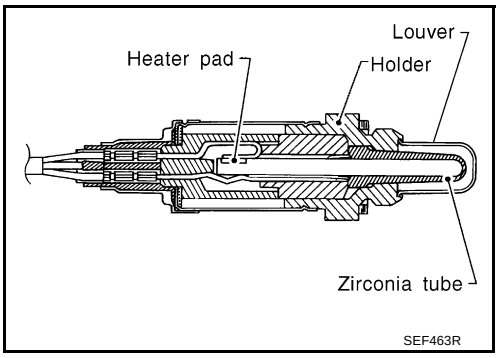

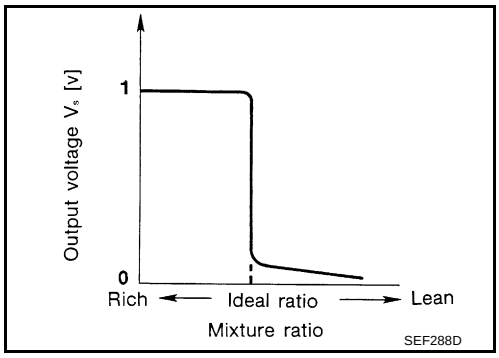

CONSULT-II Reference Value in Data Monitor Mode

ABS007RP

Specification data are reference values.

MONITOR ITEM	CONDITION		SPECIFICATION
HO2S1 (B1) HO2S1 (B2)	● Engine: After warming up	Maintaining engine speed at 2,000 rpm	0 - 0.3V ←→ Approx. 0.6 - 1.0V
HO2S1 MNTR (B1) HO2S1 MNTR (B2)			LEAN ←→ RICH Changes more than 5 times during 10 seconds.

On Board Diagnosis Logic

ABS007RQ

To judge the malfunction, the output from the heated oxygen sensor 1 is monitored to determine whether the rich output is sufficiently high and lean output is sufficiently low. When both the outputs are shifting to the rich side, the malfunction will be detected.

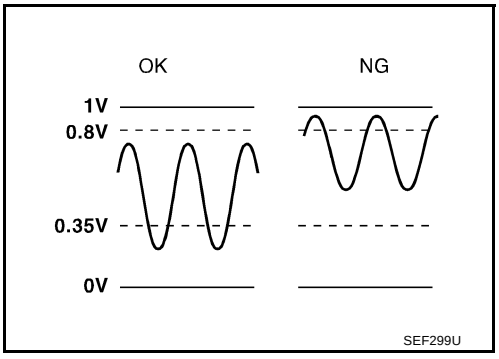

DTC No.	Trouble diagnosis name	DTC detecting condition	Possible cause
P1144 1144 (Bank 1)	Heated oxygen sensor 1 rich shift monitoring	The maximum and minimum voltages from the sensor are beyond the specified voltages.	● Heated oxygen sensor 1 ● Heated oxygen sensor 1 heater ● Fuel pressure ● Fuel injector
P1164 1164 (Bank 2)			

DTC Confirmation Procedure

ABS007RR

CAUTION:

Always drive vehicle at a safe speed.

NOTE:

If DTC Confirmation Procedure has been previously conducted, always turn ignition switch OFF and wait at least 10 seconds before conducting the next test.

TESTING CONDITION:

- **Always perform at a temperature above –10°C (14°F).**
- **Before performing the following procedure, confirm that battery voltage is more than 11V at idle.**

WITH CONSULT-II

1. Start engine and warm it up to normal operating temperature.
2. Stop engine and wait at least 5 seconds.
3. Turn ignition switch ON and select “HO2S1 (B1) P1144” or “HO2S1 (B2) P1164” of “HO2S1” in “DTC WORK SUPPORT” mode with CONSULT-II.
4. Touch “START”.
5. Start engine and let it idle for at least 3 minutes.

   NOTE:
   Do not raise engine speed above 3,000 rpm after this step. If the engine speed limit is exceeded, return to step 5.

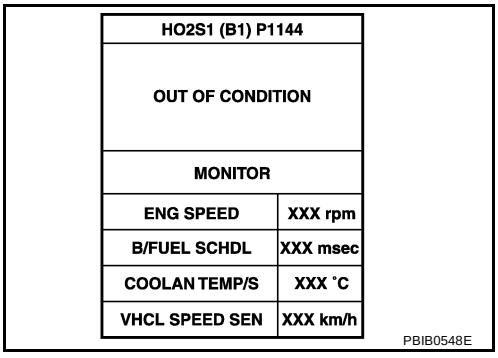

6. When the following conditions are met, “TESTING” will be displayed on the CONSULT-II screen. Maintain the conditions continuously until “TESTING” changes to “COMPLETED”. (It will take approximately 40 seconds or more.)

ENG SPEED	1,200 - 2,500 rpm
Vehicle speed	Less than 100 km/h (62 MPH)
B/FUEL SCHDL	1.7 - 12.0 msec
Selector lever	Suitable position

   If “TESTING” is not displayed after 5 minutes, retry from step 2.

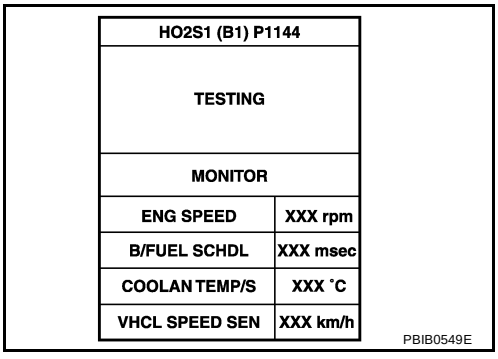

7. Make sure that “OK” is displayed after touching “SELF-DIAG RESULTS”. If “NG” is displayed, refer to EC-1182, "Diagnostic Procedure" .

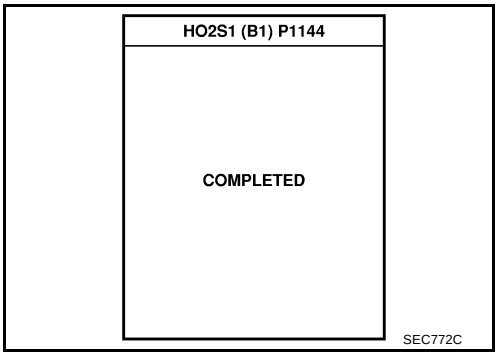

Overall Function Check

ABS007RS

Use this procedure to check the overall function of the heated oxygen sensor 1 circuit. During this check, a 1st trip DTC might not be confirmed.

WITH GST

1. Start engine and warm it up to normal operating temperature.
2. Set voltmeter probes between ECM terminal 16 [HO2S1(B1) signal] 35 [HO2S1(B2) signal] and ground.
3. Check one of the following with engine speed held at 2,000 rpm constant under no load.
   - The maximum voltage is below 0.8V at least 1 time.
   - The minimum voltage is below 0.35V at least 1 time.
4. If NG, go to EC-1182, "Diagnostic Procedure" .

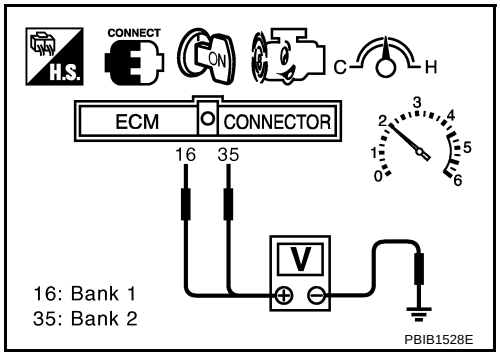

Diagnostic Procedure

ABS007RT

1. CHECK GROUND CONNECTIONS

1. Turn ignition switch OFF.
2. Loosen and retighten three ground screws on the body.
   Refer to EC-861, "Ground Inspection" .

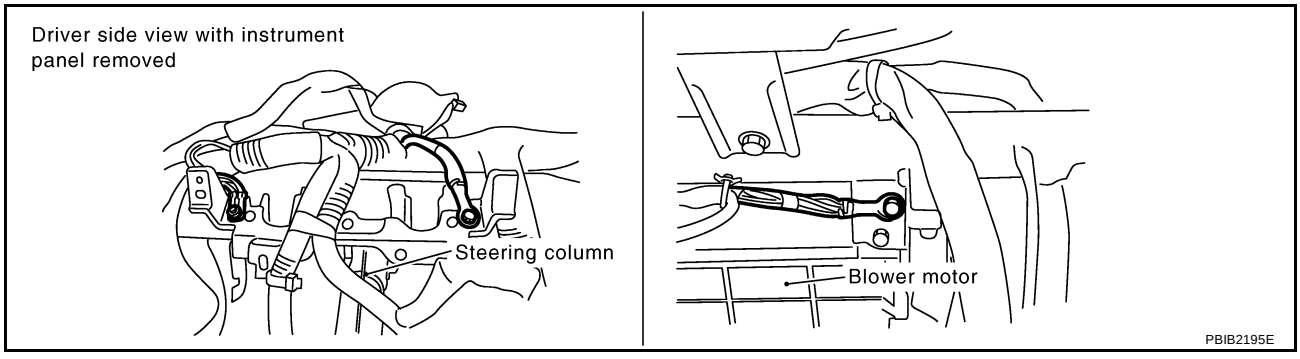

OK or NG

OK >> GO TO 2.
NG >> Repair or replace ground connections.

2. RETIGHTEN HEATED OXYGEN SENSOR 1

Loosen and retighten heated oxygen sensor 1.

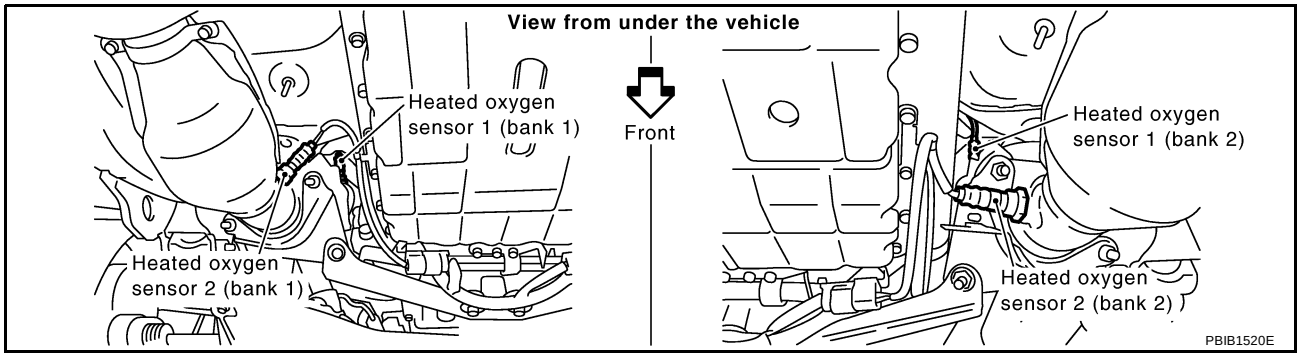

Tightening torque: 50 N·m (5.1 kg-m, 37 ft-lb)

>> GO TO 3.

3. CLEAR THE SELF-LEARNING DATA

With CONSULT-II

1. Start engine and warm it up to normal operating temperature.
2. Select “SELF-LEARNING CONT” in “WORK SUPPORT” mode with CONSULT-II.
3. Clear the self-learning control coefficient by touching “CLEAR”.
4. Run engine for at least 10 minutes at idle speed.
   Is the 1st trip DTC P0172 or P0175 detected?
   Is it difficult to start engine?

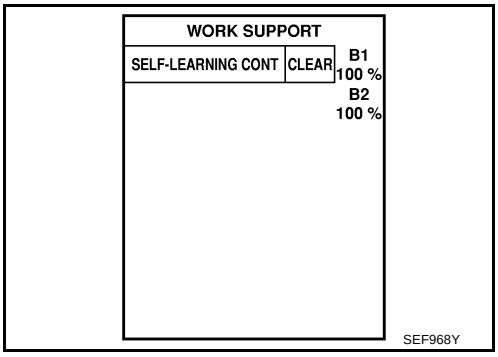

Without CONSULT-II

1. Start engine and warm it up to normal operating temperature.
2. Turn ignition switch OFF.
3. Disconnect mass air flow sensor harness connector, and restart and run engine for at least 5 seconds at idle speed.
4. Stop engine and reconnect mass air flow sensor harness connector.
5. Make sure DTC P0102 is displayed.
6. Erase the DTC memory. Refer to EC-758, "HOW TO ERASE EMISSION-RELATED DIAGNOSTIC INFORMATION" .
7. Make sure DTC P0000 is displayed.
8. Run engine for at least 10 minutes at idle speed.
   Is the 1st trip DTC P0172 or P0175 detected?
   Is it difficult to start engine?

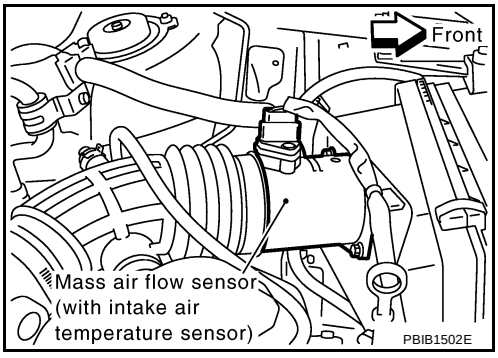

Yes or No

Yes >> Perform trouble diagnosis for DTC P0172, P0175. Refer to EC-995 .
No >> GO TO 4.

4. CHECK HO2S1 CONNECTOR FOR WATER

1. Turn ignition switch OFF.
2. Disconnect heated oxygen sensor 1 harness connector.

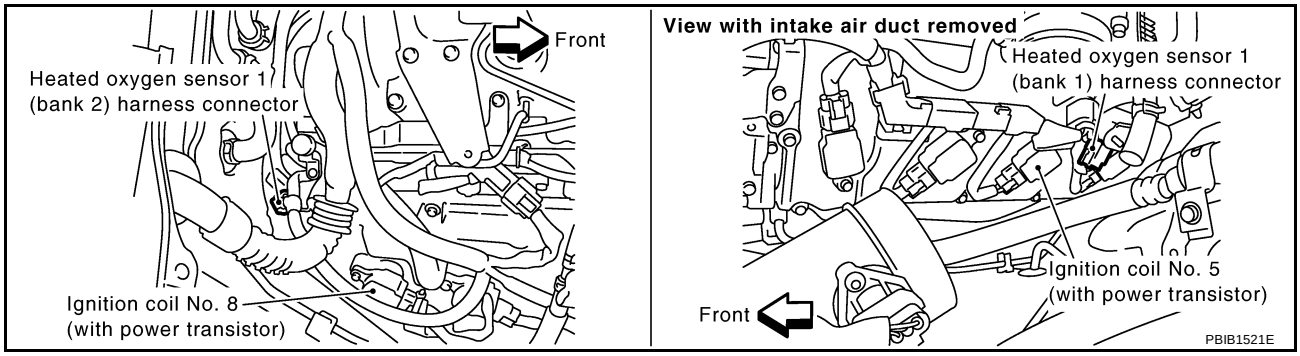

3. Check connectors for water.

Water should not exist.

OK or NG

OK >> GO TO 5.
NG >> Repair or replace harness or connectors.

5. CHECK HEATED OXYGEN SENSOR 1 HEATER

Refer to EC-884, "Component Inspection" .

OK or NG

OK >> GO TO 6.
NG >> Replace malfunctioning heated oxygen sensor 1.

6. CHECK HEATED OXYGEN SENSOR 1

Refer to EC-1184, "Component Inspection" .

OK or NG

OK >> GO TO 7.
NG >> Replace malfunctioning heated oxygen sensor 1.

7. CHECK INTERMITTENT INCIDENT

Refer to EC-854, "TROUBLE DIAGNOSIS FOR INTERMITTENT INCIDENT" .
For circuit, refer to EC-937, "Wiring Diagram" .

>> **INSPECTION END**

Component Inspection

ABS007RU

HEATED OXYGEN SENSOR 1

With CONSULT-II

1. Start engine and warm it up to normal operating temperature.
2. Select “MANU TRIG” and adjust “TRIGGER POINT” to 100% in “DATA MONITOR” mode with CONSULT-II.
3. Select “HO2S1 (B1)” and “HO2S1 MNTR (B1)”.
4. Hold engine speed at 2,000 rpm under no load during the following steps.

5. Touch “RECORD” on CONSULT-II screen.

DATA MONITOR	
MONITOR	NO DTC
ENG SPEED	XXX rpm
MAS A/F SE-B1	XXX V
COOLAN TEMP/S	XXX °C
HO2S1 (B1)	XXX V
HO2S1 MNTR (B1)	LEAN

SEF646Y

6. Check the following.
   - “HO2S1 MNTR (B1)/(B2)” in “DATA MONITOR” mode changes from “RICH” to “LEAN” to “RICH” more than 5 times in 10 seconds.
     5 times (cycles) are counted as shown at right.
   - “HO2S1 (B1)/(B2)” voltage goes above 0.6V at least once.
   - “HO2S1 (B1)/(B2)” voltage goes below 0.3V at least once.
   - “HO2S1 (B1)/(B2)” voltage never exceeds 1.0V.

Bank 1

cycle	1	2	3	4	5
HO2S1 MNTR (B1)	R-L-R-L-R-L-R-L-R-L-R				

Bank 2

cycle	1	2	3	4	5
HO2S1 MNTR (B2)	R-L-R-L-R-L-R-L-R-L-R				

R means HO2S1 MNTR (B1)/(B2) indicates RICH

L means HO2S1 MNTR (B1)/(B2) indicates LEAN

SEF647Y

Trigger	ENG SPEED	HO2S1 (B1)
	rpm	V
XXX	XXX	XXX
XXX	XXX	XXX
XXX	XXX	XXX
XXX	XXX	XXX
XXX	XXX	XXX
XXX	XXX	XXX
XXX	XXX	XXX
XXX	XXX	XXX
XXX	XXX	XXX
XXX	XXX	XXX
XXX	XXX	XXX
XXX	XXX	XXX

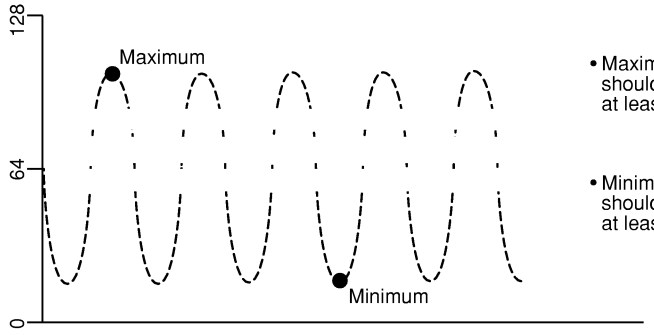

- Maximum voltage should be over 0.6V at least one time.
- Minimum voltage should be below 0.30V at least one time.

SEF648Y

CAUTION:

- **Discard any heated oxygen sensor which has been dropped from a height of more than 0.5 m (19.7 in) onto a hard surface such as a concrete floor; use a new one.**
- **Before installing new oxygen sensor, clean exhaust system threads using Oxygen Sensor Thread Cleaner tool J-43897-18 or J-43897-12 and approved anti-seize lubricant.**

Without CONSULT-II

1. Start engine and warm it up to normal operating temperature.
2. Set voltmeter probes between ECM terminal 16 [HO2S1 (B1) signal] or 35 [HO2S1 (B2) signal] and ground.
3. Check the following with engine speed held at 2,000 rpm constant under no load.
   - The voltage fluctuates between 0 to 0.3V and 0.6 to 1.0V more than 5 times within 10 seconds.
   - The maximum voltage is over 0.6V at least 1 time.
   - The minimum voltage is below 0.3V at least 1 time.
   - The voltage never exceeds 1.0V.

   1 time: 0 - 0.3V → 0.6 - 1.0V → 0 - 0.3V
   2 times: 0 - 0.3V → 0.6 - 1.0V → 0 - 0.3V → 0.6 - 1.0V → 0 - 0.3V

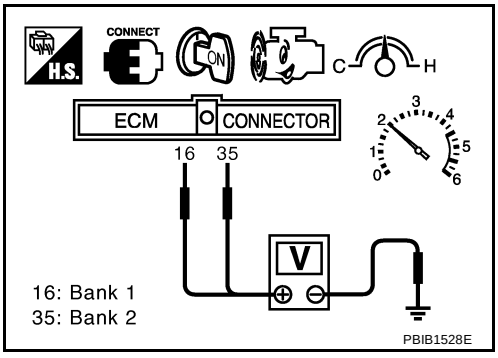

CAUTION:

- **Discard any heated oxygen sensor which has been dropped from a height of more than 0.5 m (19.7 in) onto a hard surface such as a concrete floor; use a new one.**

- **Before installing new oxygen sensor, clean exhaust system threads using Oxygen Sensor Thread Cleaner tool J-43897-18 or J-43897-12 and approved anti-seize lubricant.**

Removal and Installation

ABS007RV

HEATED OXYGEN SENSOR 1

Refer to EM-182, "EXHAUST MANIFOLD AND THREE WAY CATALYST" .

DTC P1146, P1166 HO2S2

PFP:226A0

Component Description

ABS007RW

The heated oxygen sensor 2, after three way catalyst (manifold), monitors the oxygen level in the exhaust gas on each bank.
Even if switching characteristics of the heated oxygen sensor 1 are shifted, the air-fuel ratio is controlled to stoichiometric, by the signal from the heated oxygen sensor 2.
This sensor is made of ceramic zirconia. The zirconia generates voltage from approximately 1V in richer conditions to 0V in leaner conditions.
Under normal conditions the heated oxygen sensor 2 is not used for engine control operation.

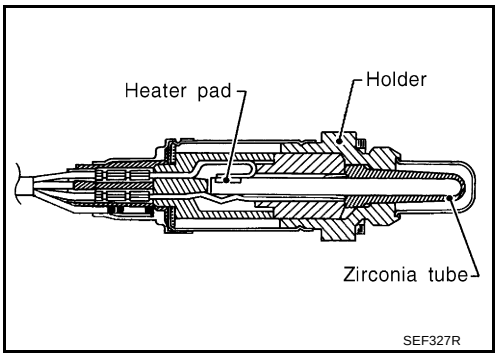

CONSULT-II Reference Value in Data Monitor Mode

ABS007RX

Specification data are reference values.

MONITOR ITEM	CONDITION		SPECIFICATION
HO2S2 (B1) HO2S2 (B2)	● Engine: After warming up ● After keeping engine speed between 3,500 and 4,000 rpm for 1 minute and at idle for 1 minute under no load	Revving engine from idle up to 3,000 rpm quickly.	0 - 0.3V ←→ Approx. 0.6 - 1.0V
HO2S2 MNTR (B1) HO2S2 MNTR (B2)			LEAN ←→ RICH

On Board Diagnosis Logic

ABS007RY

The heated oxygen sensor 2 has a much longer switching time between rich and lean than the heated oxygen sensor 1. The oxygen storage capacity of the three way catalyst (manifold) causes the longer switching time. To judge the malfunctions of heated oxygen sensor 2, ECM monitors whether the minimum voltage of sensor is sufficiently low during the various driving condition such as fuel-cut.

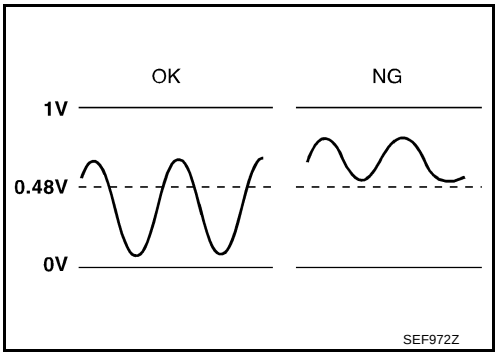

DTC No.	Trouble diagnosis name	DTC detecting condition	Possible cause
P1146 1146 (Bank 1)	Heated oxygen sensor 2 minimum voltage monitoring	The minimum voltage from the sensor is not reached to the specified voltage.	● Harness or connectors (The sensor circuit is open or shorted) ● Heated oxygen sensor 2 ● Fuel pressure ● Fuel injector
P1166 1166 (Bank 2)			

DTC Confirmation Procedure

ABS007RZ

NOTE:
If DTC confirmation Procedure has been previously conducted, always turn ignition switch OFF and wait at least 10 seconds before conducting the next test.

WITH CONSULT-II

TESTING CONDITION:
For better results, perform "DTC WORK SUPPORT" at a temperature of 0 to 30 °C (32 to 86 °F).

1. Turn ignition switch ON and select "DATA MONITOR" mode with CONSULT-II.
2. Start engine and warm it up to the normal operating temperature.
3. Turn ignition switch OFF and wait at least 10 seconds.
4. Start engine and keep the engine speed between 3,500 and 4,000 rpm for at least 1 minute under no load.
5. Let engine idle for 1 minute.
6. Make sure that "COOLAN TEMP/S" indicates more than 70°C (158°F).
   If not, warm up engine and go to next step when "COOLAN TEMP/S" indication reaches to 70°C (158°F).

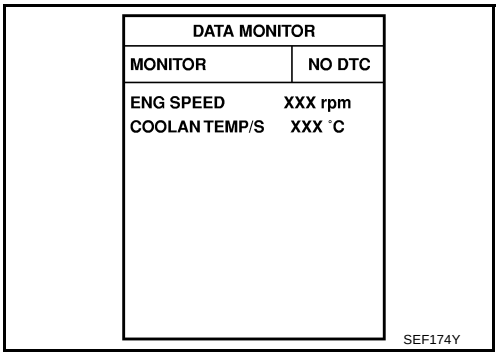

7. Open engine hood.
8. Select "HO2S2 (B1) P1146" or "HO2S2 (B2) P1166" of "HO2S2" in "DTC WORK SUPPORT" mode with CONSULT-II.
9. Start engine and following the instruction of CONSULT-II.

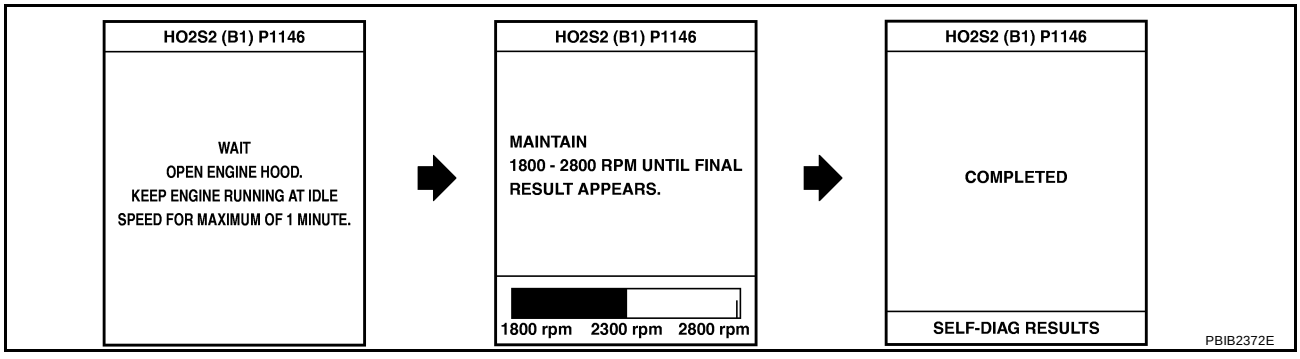

NOTE:
It will take at most 10 minutes until "COMPLETED" is displayed.

10. Make sure that "OK" is displayed after touching "SELF-DIAG RESULTS".
    If "NG" is displayed, refer to EC-1193, "Diagnostic Procedure" .
    If "CAN NOT BE DIAGNOSED" is displayed, perform the following.

a. Turn ignition switch OFF and leave the vehicle in a cool place (soak the vehicle).
b. Return to step 1.

Overall Function Check

ABS007S0

Use this procedure to check the overall function of the heated oxygen sensor 2 circuit. During this check, a 1st trip DTC might not be confirmed.

WITH GST

1. Start engine and warm it up to the normal operating temperature.
2. Turn ignition switch OFF and wait at least 10 seconds.
3. Start engine and keep the engine speed between 3,500 and 4,000 rpm for at least 1 minute under no load.
4. Let engine idle for 1 minute.
5. Set voltmeter probes between ECM terminal 55 [HO2S2 (B1) signal] or 74 [HO2S2 (B2) signal] and ground.

6. Check the voltage when revving up to 4,000 rpm under no load at least 10 times.
   (Depress and release accelerator pedal as soon as possible.)
   The voltage should be below 0.48V at least once during this procedure.
   If the voltage can be confirmed in step 6, step 7 is not necessary.
7. Keep vehicle at idling for 10 minutes, then check the voltage. Or check the voltage when coasting from 80 km/h (50 MPH) in D position.
   The voltage should be below 0.48V at least once during this procedure.
8. If NG, go to EC-1193, "Diagnostic Procedure" .

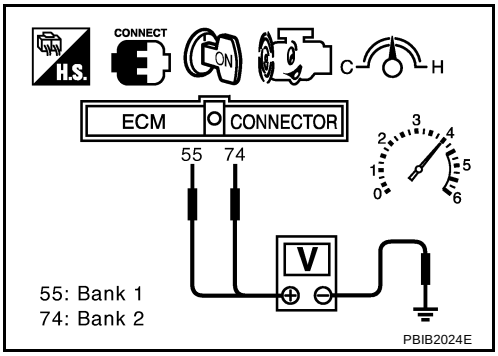

Wiring Diagram
BANK 1

ABS007S1

EC-O2S2B1-01

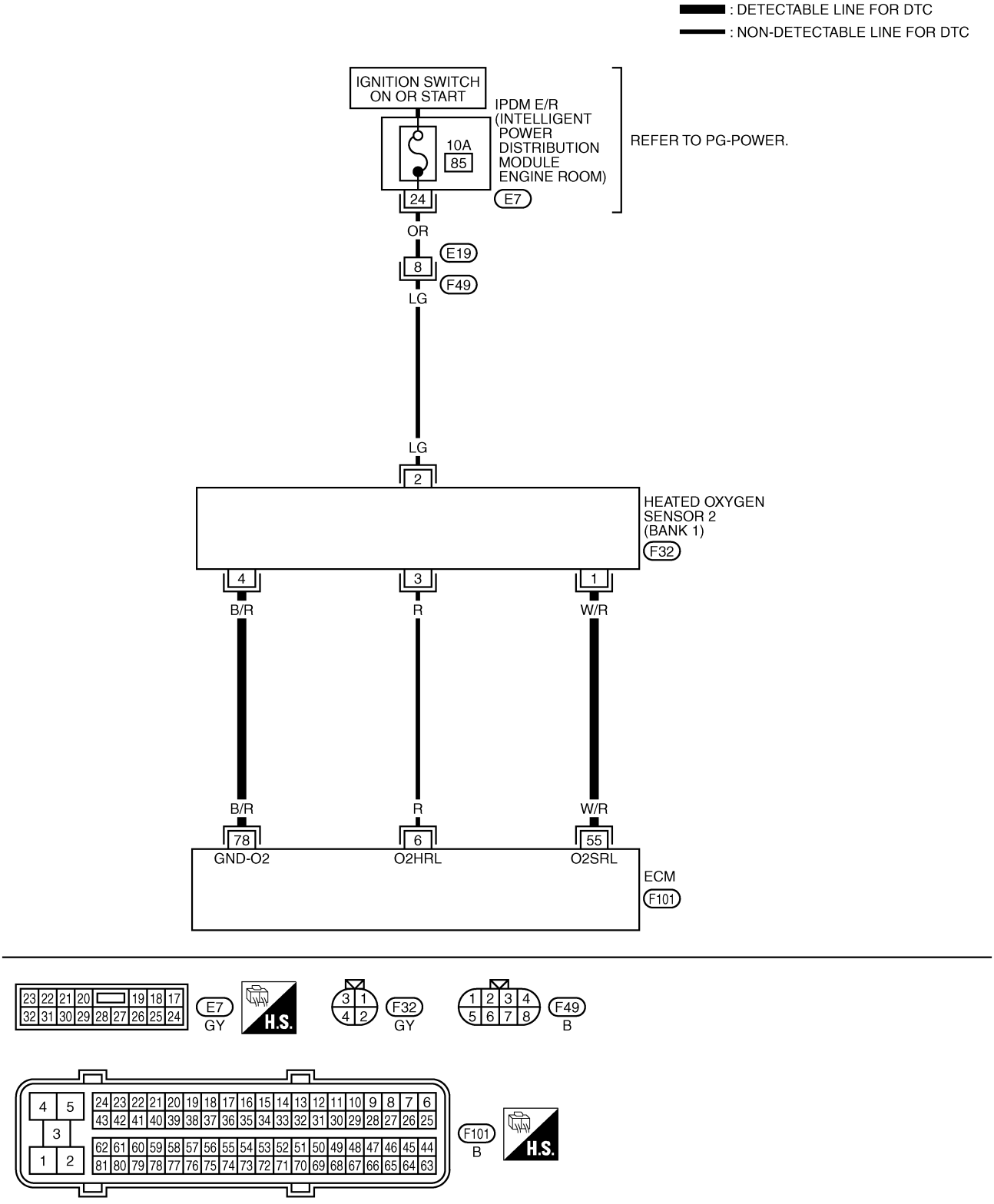

TBWM0230E

Specification data are reference values and are measured between each terminal and ground.

CAUTION:

Do not use ECM ground terminals when measuring input/output voltage. Doing so may result in damage to the ECM's transistor. Use a ground other than ECM terminals, such as the ground.

TERMINAL NO.	WIRE COLOR	ITEM	CONDITION	DATA (DC Voltage)
55	W/R	Heated oxygen sensor 2 (bank 1)	**[Engine is running]** ● **Warm-up condition** ● Revving engine from idle to 3,000 rpm quickly after the following conditions are met – After keeping the engine speed between 3,500 and 4,000 rpm for 1 minute and at idle for 1 minute under no load	0 - Approximately 1.0V
78	B/R	Sensor ground (Heated oxygen sensor)	**[Engine is running]** ● **Warm-up condition** ● Idle speed	Approximately 0V

BANK 2

EC-O2S2B2-01

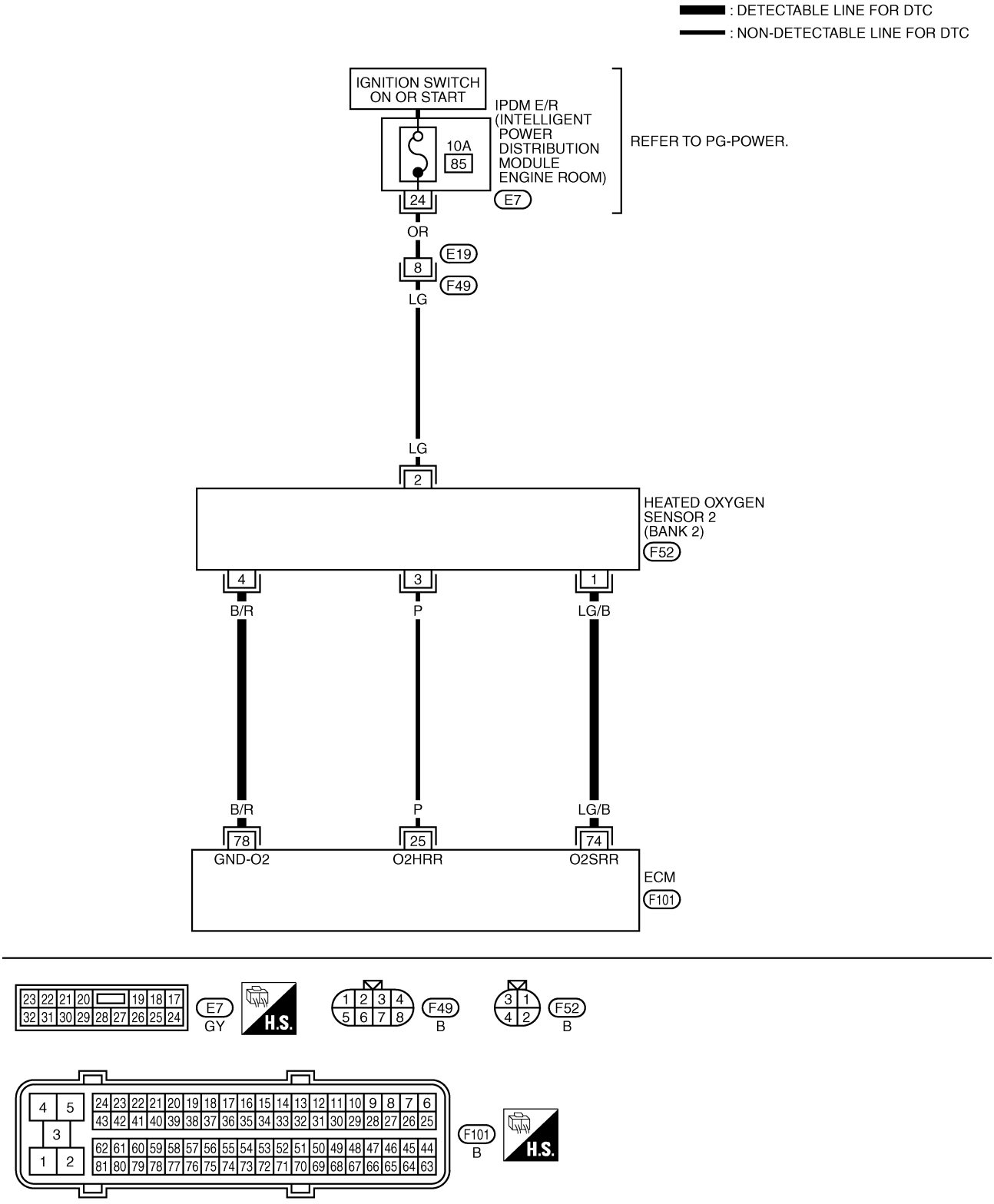

Specification data are reference values and are measured between each terminal and ground.

CAUTION:
Do not use ECM ground terminals when measuring input/output voltage. Doing so may result in damage to the ECM's transistor. Use a ground other than ECM terminals, such as the ground.

TERMINAL NO.	WIRE COLOR	ITEM	CONDITION	DATA (DC Voltage)
74	LG/B	Heated oxygen sensor 2 (bank 2)	**[Engine is running]** ● **Warm-up condition** ● Revving engine from idle to 3,000 rpm quickly after the following conditions are met – After keeping the engine speed between 3,500 and 4,000 rpm for 1 minute and at idle for 1 minute under no load	0 - Approximately 1.0V
78	B/R	Sensor ground (Heated oxygen sensor)	**[Engine is running]** ● **Warm-up condition** ● Idle speed	Approximately 0V

Diagnostic Procedure

ABS007S2

1. CHECK GROUND CONNECTIONS

1. Turn ignition switch OFF.
2. Loosen and retighten three ground screws on the body.
   Refer to EC-861, "Ground Inspection" .

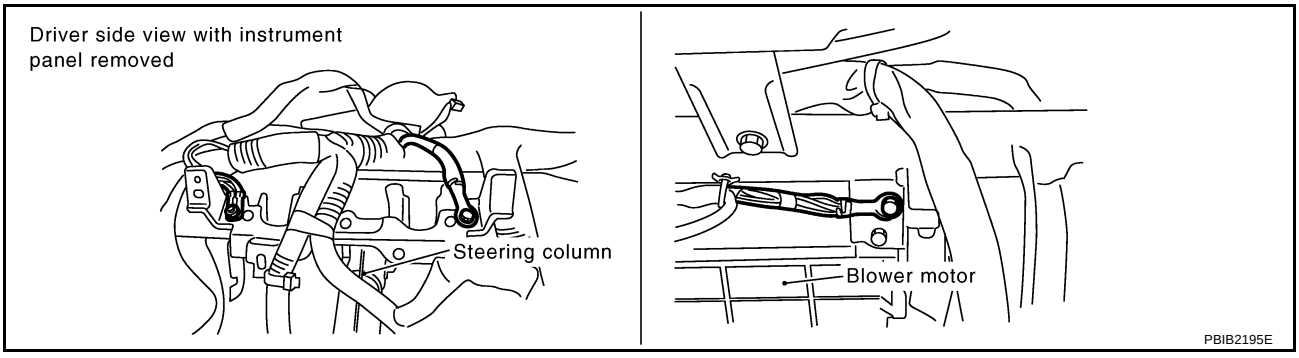

OK or NG

OK >> GO TO 2.
NG >> Repair or replace ground connections.

2. CLEAR THE SELF-LEARNING DATA

With CONSULT-II

1. Start engine and warm it up to normal operating temperature.
2. Select “SELF-LEARNING CONT” in “WORK SUPPORT” mode with CONSULT-II.
3. Clear the self-learning control coefficient by touching “CLEAR”.
4. Run engine for at least 10 minutes at idle speed.
   Is the 1st trip DTC P0172 or P0175 detected?
   Is it difficult to start engine?

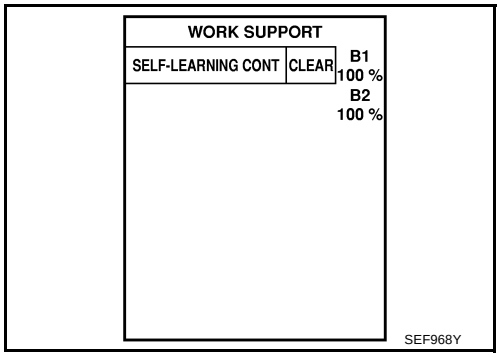

Without CONSULT-II

1. Start engine and warm it up to normal operating temperature.
2. Turn ignition switch OFF.
3. Disconnect mass air flow sensor harness connector, and restart and run engine for at least 5 seconds at idle speed.
4. Stop engine and reconnect mass air flow sensor harness connector.
5. Make sure DTC P0102 is displayed.
6. Erase the DTC memory. Refer to EC-758, "HOW TO ERASE EMISSION-RELATED DIAGNOSTIC INFORMATION" .
7. Make sure DTC P0000 is displayed.
8. Run engine for at least 10 minutes at idle speed.
   Is the 1st trip DTC P0172 or P0175 detected?
   Is it difficult to start engine?

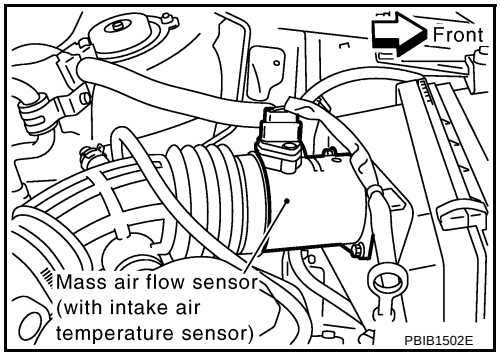

Yes or No

Yes >> Perform trouble diagnosis for DTC P0172, P0175. Refer to EC-995 .
No >> GO TO 3.

3. CHECK HO2S2 GROUND CIRCUIT FOR OPEN AND SHORT

1. Turn ignition switch OFF.
2. Disconnect heated oxygen sensor 2 harness connector.

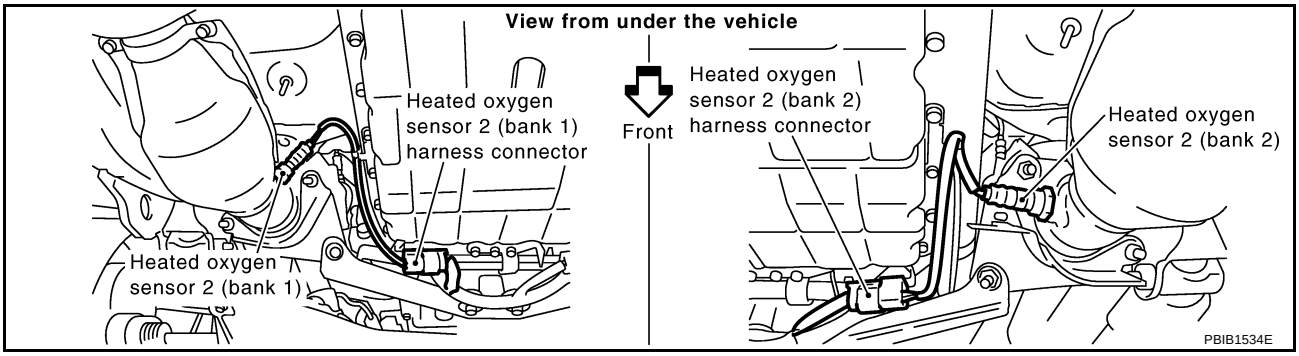

3. Disconnect ECM harness connector.
4. Check harness continuity between HO2S2 terminal 4 and ECM terminal 78.
   Refer to Wiring Diagram.

   Continuity should exist.

5. Also check harness for short to ground and short to power.

OK or NG

OK >> GO TO 4.
NG >> Repair open circuit or short to ground or short to power in harness or connectors.

4. CHECK HO2S2 INPUT SIGNAL CIRCUIT FOR OPEN AND SHORT

1. Check harness continuity between ECM terminal and HO2S2 terminal as follows.
   Refer to Wiring Diagram.

DTC	Terminals		Bank
	ECM	Sensor	
P1146	55	1	1
P1166	74	1	2

   Continuity should exist.

2. Check harness continuity between the following terminals and ground.
   Refer to Wiring Diagram.

DTC	Terminals		Bank
	ECM	Sensor	
P1146	55	1	1
P1166	74	1	2

   Continuity should not exist.

3. Also check harness for short to power.

OK or NG

OK >> GO TO 5.
NG >> Repair open circuit or short to ground or short to power in harness or connectors.

5. CHECK HEATED OXYGEN SENSOR 2

Refer to EC-1196, "Component Inspection" .

OK or NG

OK >> GO TO 6.
NG >> Replace malfunctioning heated oxygen sensor 2.

6. CHECK INTERMITTENT INCIDENT

Refer to EC-854, "TROUBLE DIAGNOSIS FOR INTERMITTENT INCIDENT" .

>> **INSPECTION END**

Component Inspection

ABS007S3

HEATED OXYGEN SENSOR 2

With CONSULT-II

1. Turn ignition switch ON and select “DATA MONITOR” mode with CONSULT-II.
2. Start engine and warm it up to the normal operating temperature.
3. Turn ignition switch OFF and wait at least 10 seconds.
4. Start engine and keep the engine speed between 3,500 and 4,000 rpm for at least 1 minute under no load.
5. Let engine idle for 1 minute.

DATA MONITOR	
MONITOR	NO DTC
ENG SPEED	XXX rpm
COOLAN TEMP/S	XXX °C

SEF174Y

6. Select “FUEL INJECTION” in “ACTIVE TEST” mode, and select “HO2S2 (B1)/(B2)” as the monitor item with CONSULT-II.

ACTIVE TEST	
FUEL INJECTION	25 %
MONITOR	
ENG SPEED	XXX rpm
HO2S1 (B1)	XXX V
HO2S2 (B1)	XXX V
HO2S1 MNTR (B1)	RICH
HO2S2 MNTR (B1)	RICH

SEF662Y

7. Check “HO2S2 (B1)/(B2)” at idle speed when adjusting “FUEL INJECTION” to ±25%.

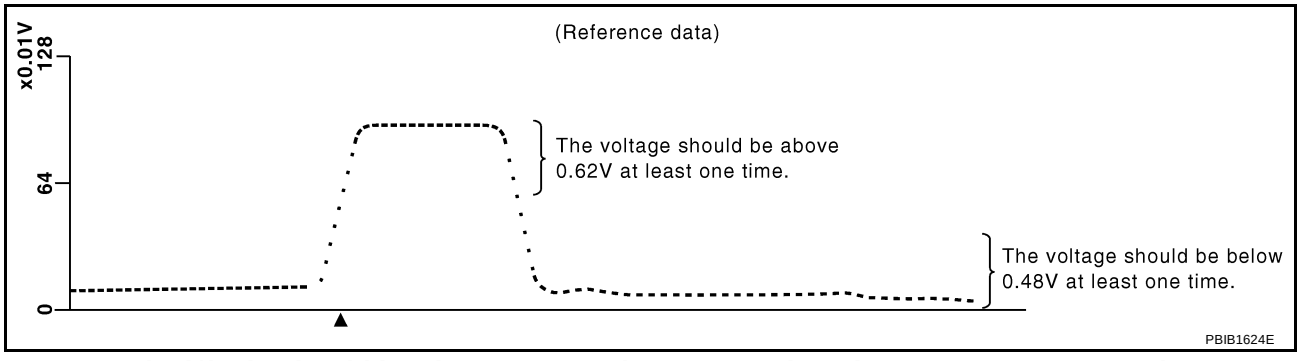

“HO2S2 (B1)/(B2)” should be above 0.62V at least once when the “FUEL INJECTION” is +25%.
“HO2S2 (B1)/(B2)” should be below 0.48V at least once when the “FUEL INJECTION” is –25%.

CAUTION:

- **Discard any heated oxygen sensor which has been dropped from a height of more than 0.5 m (19.7 in) onto a hard surface such as a concrete floor; use a new one.**

- **Before installing new oxygen sensor, clean exhaust system threads using Oxygen Sensor Thread Cleaner tool J-43897-18 or J-43897-12 and approved anti-seize lubricant.**

Without CONSULT-II

1. Start engine and warm it up to the normal operating temperature.
2. Turn ignition switch OFF and wait at least 10 seconds.
3. Start engine and keep the engine speed between 3,500 and 4,000 rpm for at least 1 minute under no load.
4. Let engine idle for 1 minute.
5. Set voltmeter probes between ECM terminal 55 [HO2S2 (B1) signal] or 74 [HO2S2 (B2) signal] and ground.
6. Check the voltage when revving up to 4,000 rpm under no load at least 10 times.
   (Depress and release accelerator pedal as soon as possible.)
   The voltage should be above 0.62V at least once during this procedure.
   If the voltage is above 0.62V at step 6, step 7 is not necessary.
7. Keep vehicle at idling for 10 minutes, then check voltage. Or check the voltage when coasting from 80 km/h (50 MPH) in D position.
   The voltage should be below 0.48V at least once during this procedure.

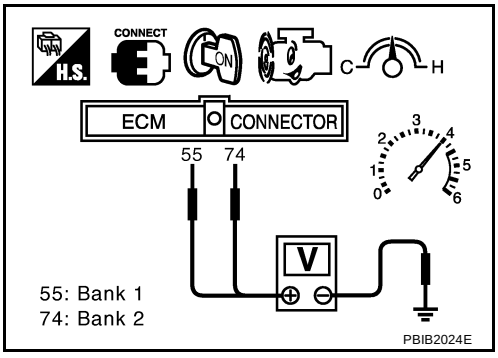

8. If NG, replace heated oxygen sensor 2.

CAUTION:

- **Discard any heated oxygen sensor which has been dropped from a height of more than 0.5 m (19.7 in) onto a hard surface such as a concrete floor; use a new one.**
- **Before installing new oxygen sensor, clean exhaust system threads using Oxygen Sensor Thread Cleaner tool J-43897-18 or J-43897-12 and approved anti-seize lubricant.**

Removal and Installation

ABS007S4

HEATED OXYGEN SENSOR 2

Refer to EM-182, "EXHAUST MANIFOLD AND THREE WAY CATALYST" .

DTC P1147, P1167 HO2S2

PFP:226A0

Component Description

ABS007S5

The heated oxygen sensor 2, after three way catalyst (manifold), monitors the oxygen level in the exhaust gas on each bank.
Even if switching characteristics of the heated oxygen sensor 1 are shifted, the air-fuel ratio is controlled to stoichiometric, by the signal from the heated oxygen sensor 2.
This sensor is made of ceramic zirconia. The zirconia generates voltage from approximately 1V in richer conditions to 0V in leaner conditions.
Under normal conditions the heated oxygen sensor 2 is not used for engine control operation.

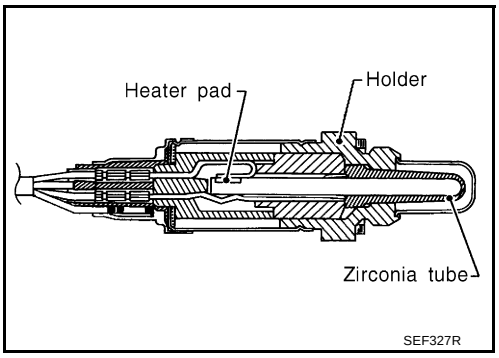

CONSULT-II Reference Value in Data Monitor Mode

ABS007S6

Specification data are reference values.

MONITOR ITEM	CONDITION		SPECIFICATION
HO2S2 (B1) HO2S2 (B2)	● Engine: After warming up ● After keeping engine speed between 3,500 and 4,000 rpm for 1 minute and at idle for 1 minute under no load	Revving engine from idle up to 3,000 rpm quickly.	0 - 0.3V ←→ Approx. 0.6 - 1.0V
HO2S2 MNTR (B1) HO2S2 MNTR (B2)			LEAN ←→ RICH

On Board Diagnosis Logic

ABS007S7

The heated oxygen sensor 2 has a much longer switching time between rich and lean than the heated oxygen sensor 1. The oxygen storage capacity of the three way catalyst (manifold) causes the longer switching time. To judge the malfunctions of heated oxygen sensor 2, ECM monitors whether the maximum voltage of the sensor is sufficiently high during the various driving condition such as fuel-cut.

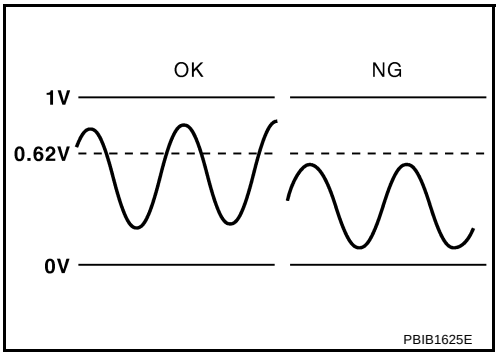

DTC No.	Trouble diagnosis name	DTC detecting condition	Possible cause
P1147 1147 (Bank 1)	Heated oxygen sensor 2 maximum voltage monitoring	The maximum voltage from the sensor is not reached to the specified voltage.	● Harness or connectors (The sensor circuit is open or shorted) ● Heated oxygen sensor 2 ● Fuel pressure ● Fuel injector ● Intake air leaks
P1167 1167 (Bank 2)			

DTC Confirmation Procedure

ABS007S8

NOTE:
If DTC confirmation Procedure has been previously conducted, always turn ignition switch OFF and wait at least 10 seconds before conducting the next test.

WITH CONSULT-II

TESTING CONDITION:
For better results, perform "DTC WORK SUPPORT" at a temperature of 0 to 30 °C (32 to 86 °F).

1. Turn ignition switch ON and select "DATA MONITOR" mode with CONSULT-II.
2. Start engine and warm it up to the normal operating temperature.
3. Turn ignition switch OFF and wait at least 10 seconds.
4. Start engine and keep the engine speed between 3,500 and 4,000 rpm for at least 1 minute under no load.
5. Let engine idle for 1 minute.
6. Make sure that "COOLAN TEMP/S" indicates more than 70°C (158°F).
   If not, warm up engine and go to next step when "COOLAN TEMP/S" indication reaches to 70°C (158°F).

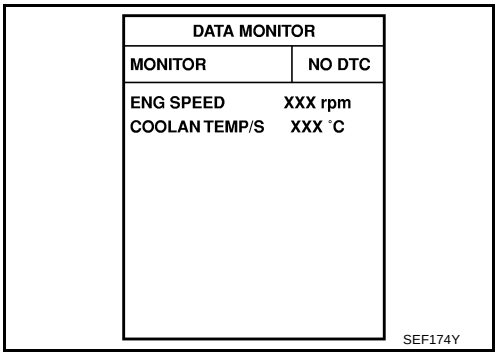

7. Open engine hood.
8. Select "HO2S2 (B1) P1147" or "HO2S2 (B2) P1167" of "HO2S2" in "DTC WORK SUPPORT" mode with CONSULT-II.
9. Start engine and following the instruction of CONSULT-II.

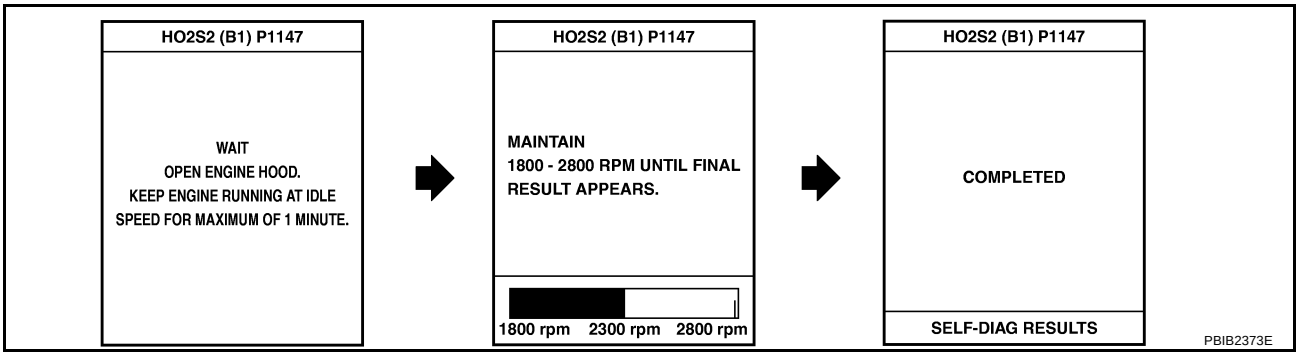

NOTE:
It will take at most 10 minutes until "COMPLETED" is displayed.

10. Make sure that "OK" is displayed after touching "SELF-DIAG RESULTS".
    If "NG" is displayed, refer to EC-1204, "Diagnostic Procedure" .
    If "CAN NOT BE DIAGNOSED" is displayed, perform the following.

a. Turn ignition switch OFF and leave the vehicle in a cool place (soak the vehicle).
b. Return to step 1.

Overall Function Check

ABS007S9

Use this procedure to check the overall function of the heated oxygen sensor 2 circuit. During this check, a 1st trip DTC might not be confirmed.

WITH GST

1. Start engine and warm it up to the normal operating temperature.
2. Turn ignition switch OFF and wait at least 10 seconds.
3. Start engine and keep the engine speed between 3,500 and 4,000 rpm for at least 1 minute under no load.
4. Let engine idle for 1 minute.
5. Set voltmeter probes between ECM terminal 55 [HO2S2 (B1) signal] or 74 [HO2S2 (B2) signal] and ground.

6. Check the voltage when revving up to 4,000 rpm under no load at least 10 times.
   (Depress and release accelerator pedal as soon as possible.)
   The voltage should be above 0.62V at least once during this procedure.
   If the voltage can be confirmed in step 6, step 7 is not necessary.
7. Keep vehicle at idling for 10 minutes, then check the voltage. Or check the voltage when coasting from 80 km/h (50 MPH) in D position.
   The voltage should be above 0.62V at least once during this procedure.
8. If NG, go to EC-1204, "Diagnostic Procedure" .

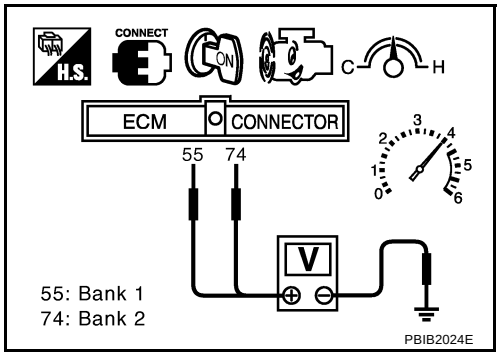

Wiring Diagram
BANK 1

ABS007SA

EC-O2S2B1-01

: DETECTABLE LINE FOR DTC
: NON-DETECTABLE LINE FOR DTC

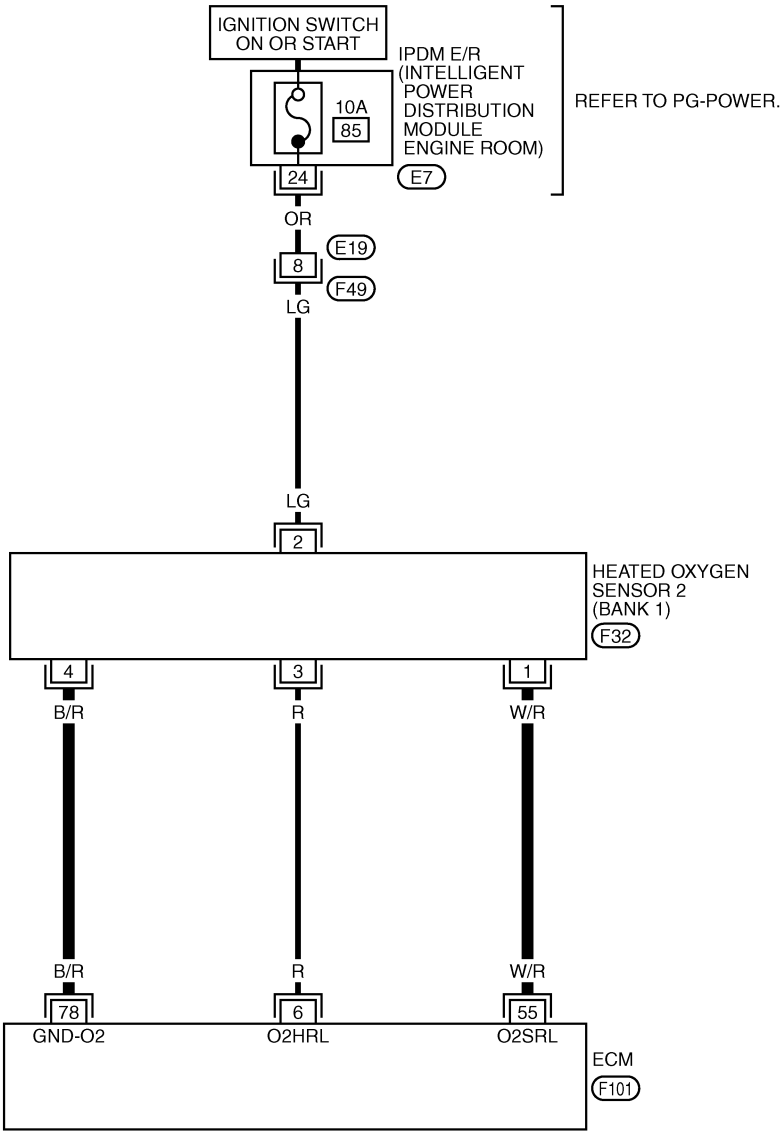

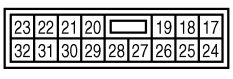

E7
GY

F32
GY

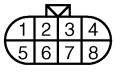

F49
B

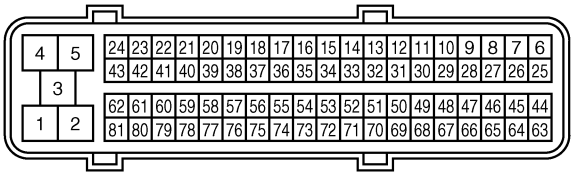

F101
B

TBWM0230E

Specification data are reference values and are measured between each terminal and ground.

CAUTION:

Do not use ECM ground terminals when measuring input/output voltage. Doing so may result in damage to the ECM's transistor. Use a ground other than ECM terminals, such as the ground.

TERMINAL NO.	WIRE COLOR	ITEM	CONDITION	DATA (DC Voltage)
55	W/R	Heated oxygen sensor 2 (bank 1)	**[Engine is running]** ● **Warm-up condition** ● Revving engine from idle to 3,000 rpm quickly after the following conditions are met – After keeping the engine speed between 3,500 and 4,000 rpm for 1 minute and at idle for 1 minute under no load	0 - Approximately 1.0V
78	B/R	Sensor ground (Heated oxygen sensor)	**[Engine is running]** ● **Warm-up condition** ● Idle speed	Approximately 0V

BANK 2

EC-O2S2B2-01

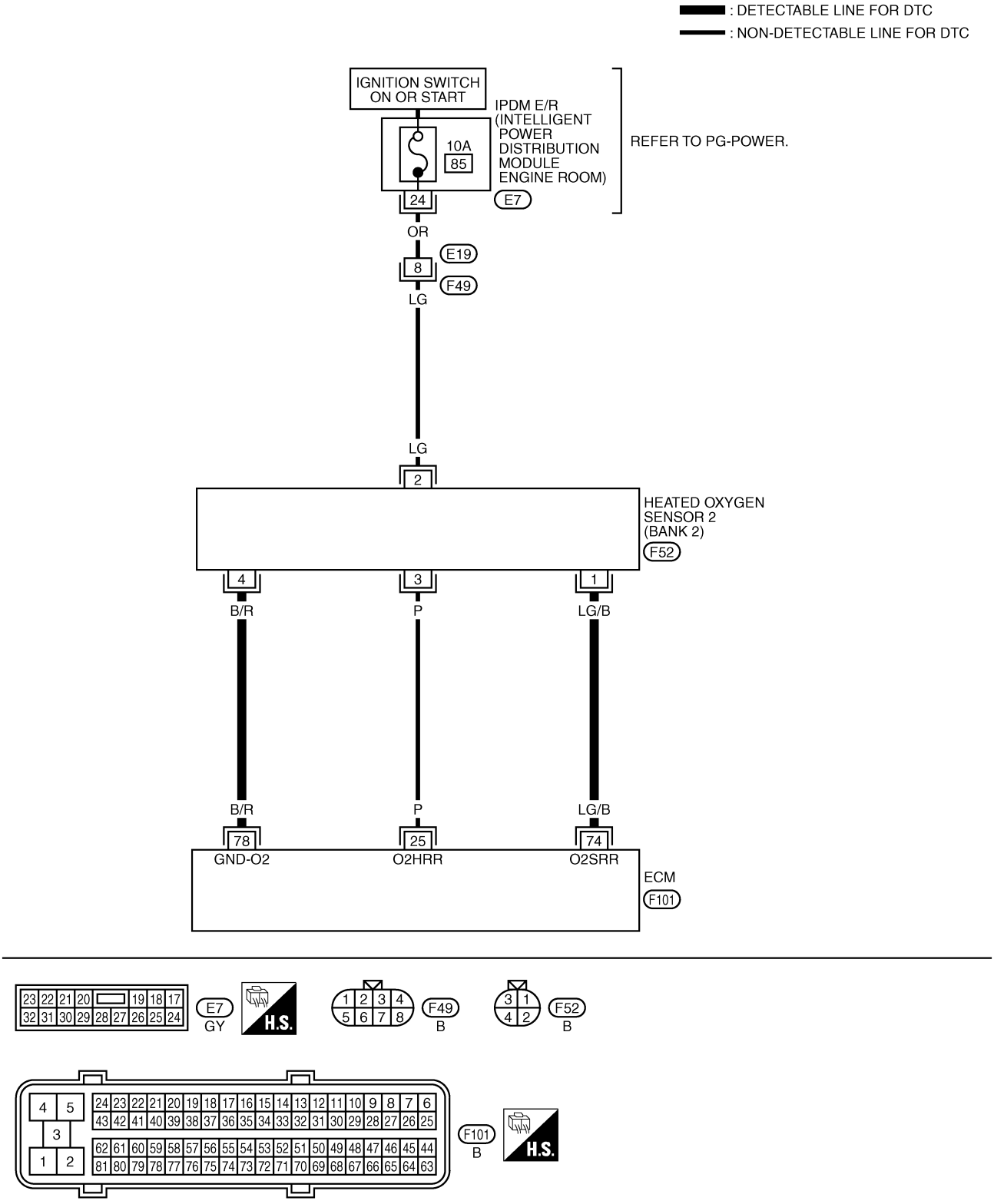

TBWM0231E

Specification data are reference values and are measured between each terminal and ground.

CAUTION:

Do not use ECM ground terminals when measuring input/output voltage. Doing so may result in damage to the ECM's transistor. Use a ground other than ECM terminals, such as the ground.

TERMINAL NO.	WIRE COLOR	ITEM	CONDITION	DATA (DC Voltage)
74	LG/B	Heated oxygen sensor 2 (bank 2)	**[Engine is running]** ● **Warm-up condition** ● Revving engine from idle to 3,000 rpm quickly after the following conditions are met – After keeping the engine speed between 3,500 and 4,000 rpm for 1 minute and at idle for 1 minute under no load	0 - Approximately 1.0V
78	B/R	Sensor ground (Heated oxygen sensor)	**[Engine is running]** ● **Warm-up condition** ● Idle speed	Approximately 0V

Diagnostic Procedure

ABS007SB

1. CHECK GROUND CONNECTIONS

1. Turn ignition switch OFF.
2. Loosen and retighten three ground screws on the body.
   Refer to EC-861, "Ground Inspection" .

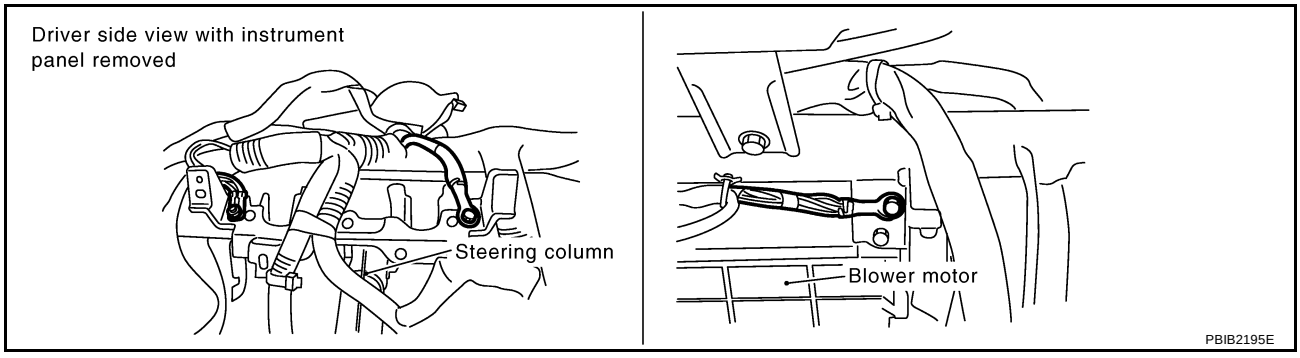

OK or NG

OK >> GO TO 2.
NG >> Repair or replace ground connections.

2. CLEAR THE SELF-LEARNING DATA

With CONSULT-II

1. Start engine and warm it up to normal operating temperature.
2. Select “SELF-LEARNING CONT” in “WORK SUPPORT” mode with CONSULT-II.
3. Clear the self-learning control coefficient by touching “CLEAR”.
4. Run engine for at least 10 minutes at idle speed.
   Is the 1st trip DTC P0171 or P0174 detected?
   Is it difficult to start engine?

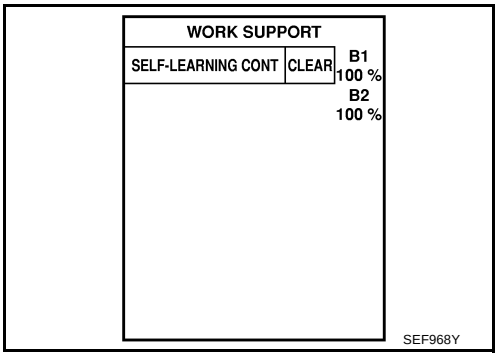

Without CONSULT-II

1. Start engine and warm it up to normal operating temperature.
2. Turn ignition switch OFF.
3. Disconnect mass air flow sensor harness connector, and restart and run engine for at least 5 seconds at idle speed.
4. Stop engine and reconnect mass air flow sensor harness connector.
5. Make sure DTC P0102 is displayed.
6. Erase the DTC memory. Refer to EC-758, "HOW TO ERASE EMISSION-RELATED DIAGNOSTIC INFORMATION" .
7. Make sure DTC P0000 is displayed.
8. Run engine for at least 10 minutes at idle speed.
   Is the 1st trip DTC P0171 or P0174 detected?
   Is it difficult to start engine?

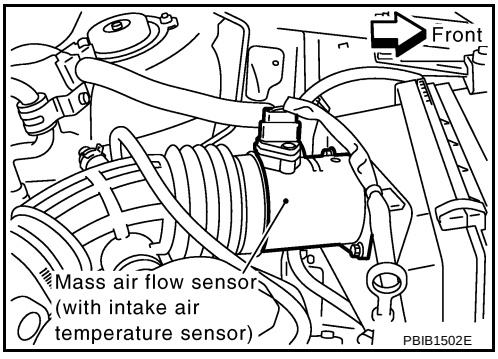

Yes or No

Yes >> Perform trouble diagnosis for DTC P0171, P0174. Refer to EC-986 .
No >> GO TO 3.

3. CHECK HO2S2 GROUND CIRCUIT FOR OPEN AND SHORT

1. Turn ignition switch OFF.
2. Disconnect heated oxygen sensor 2 harness connector.

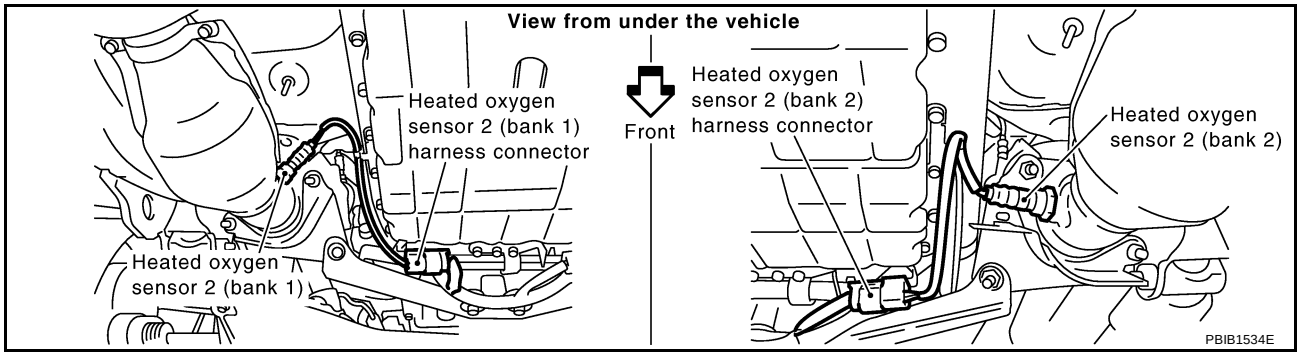

3. Disconnect ECM harness connector.
4. Check harness continuity between HO2S2 terminal 4 and ECM terminal 78.
   Refer to Wiring Diagram.

   Continuity should exist.

5. Also check harness for short to ground and short to power.

OK or NG

OK >> GO TO 4.
NG >> Repair open circuit or short to ground or short to power in harness or connectors.

4. CHECK HO2S2 INPUT SIGNAL CIRCUIT FOR OPEN AND SHORT

1. Check harness continuity between ECM terminal and HO2S2 terminal as follows.
   Refer to Wiring Diagram.

DTC	Terminals		Bank
	ECM	Sensor	
P1147	55	1	1
P1167	74	1	2

   Continuity should exist.

2. Check harness continuity between the following terminals and ground.
   Refer to Wiring Diagram.

DTC	Terminals		Bank
	ECM	Sensor	
P1147	55	1	1
P1167	74	1	2

   Continuity should not exist.

3. Also check harness for short to power.

OK or NG

OK >> GO TO 5.
NG >> Repair open circuit or short to ground or short to power in harness or connectors.

5. CHECK HEATED OXYGEN SENSOR 2

Refer to EC-1207, "Component Inspection" .

OK or NG

OK >> GO TO 6.
NG >> Replace malfunctioning heated oxygen sensor 2.

6. CHECK INTERMITTENT INCIDENT

Refer to EC-854, "TROUBLE DIAGNOSIS FOR INTERMITTENT INCIDENT" .

>> **INSPECTION END**

Component Inspection

ABS007SC

HEATED OXYGEN SENSOR 2

With CONSULT-II

1. Turn ignition switch ON and select “DATA MONITOR” mode with CONSULT-II.
2. Start engine and warm it up to the normal operating temperature.
3. Turn ignition switch OFF and wait at least 10 seconds.
4. Start engine and keep the engine speed between 3,500 and 4,000 rpm for at least 1 minute under no load.
5. Let engine idle for 1 minute.

DATA MONITOR	
MONITOR	NO DTC
ENG SPEED	XXX rpm
COOLAN TEMP/S	XXX °C

SEF174Y

6. Select “FUEL INJECTION” in “ACTIVE TEST” mode, and select “HO2S2 (B1)/(B2)” as the monitor item with CONSULT-II.

ACTIVE TEST	
FUEL INJECTION	25 %
MONITOR	
ENG SPEED	XXX rpm
HO2S1 (B1)	XXX V
HO2S2 (B1)	XXX V
HO2S1 MNTR (B1)	RICH
HO2S2 MNTR (B1)	RICH

SEF662Y

7. Check “HO2S2 (B1)/(B2)” at idle speed when adjusting “FUEL INJECTION” to ±25%.

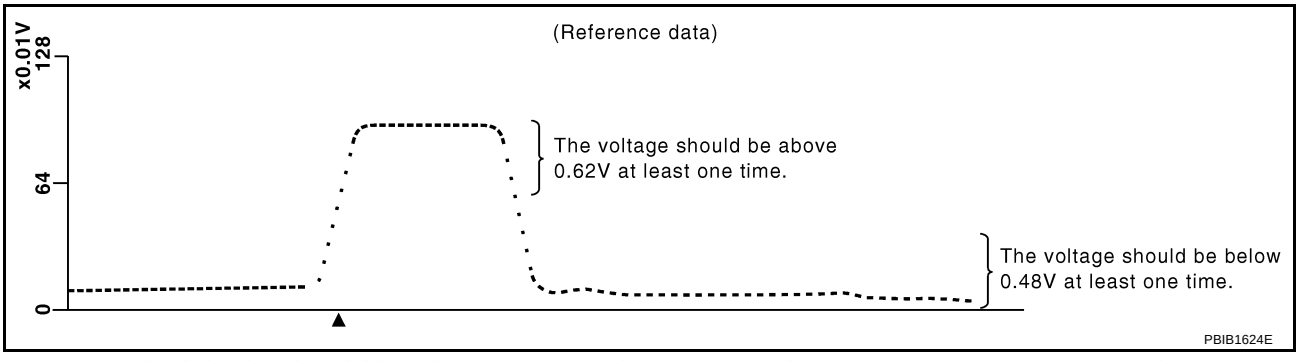

“HO2S2 (B1)/(B2)” should be above 0.62V at least once when the “FUEL INJECTION” is +25%.
“HO2S2 (B1)/(B2)” should be below 0.48V at least once when the “FUEL INJECTION” is –25%.

CAUTION:

- **Discard any heated oxygen sensor which has been dropped from a height of more than 0.5 m (19.7 in) onto a hard surface such as a concrete floor; use a new one.**

- **Before installing new oxygen sensor, clean exhaust system threads using Oxygen Sensor Thread Cleaner tool J-43897-18 or J-43897-12 and approved anti-seize lubricant.**

Without CONSULT-II

1. Start engine and warm it up to the normal operating temperature.
2. Turn ignition switch OFF and wait at least 10 seconds.
3. Start engine and keep the engine speed between 3,500 and 4,000 rpm for at least 1 minute under no load.
4. Let engine idle for 1 minute.
5. Set voltmeter probes between ECM terminal 55 [HO2S2 (B1) signal] or 74 [HO2S2 (B2) signal] and ground.
6. Check the voltage when revving up to 4,000 rpm under no load at least 10 times.
   (Depress and release accelerator pedal as soon as possible.)
   The voltage should be above 0.62V at least once during this procedure.
   If the voltage is above 0.62V at step 6, step 7 is not necessary.
7. Keep vehicle at idling for 10 minutes, then check voltage. Or check the voltage when coasting from 80 km/h (50 MPH) in D position.
   The voltage should be below 0.48V at least once during this procedure.

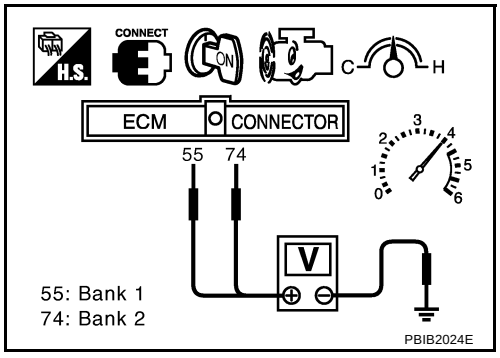

8. If NG, replace heated oxygen sensor 2.

CAUTION:

- **Discard any heated oxygen sensor which has been dropped from a height of more than 0.5 m (19.7 in) onto a hard surface such as a concrete floor; use a new one.**
- **Before installing new oxygen sensor, clean exhaust system threads using Oxygen Sensor Thread Cleaner tool J-43897-18 or J-43897-12 and approved anti-seize lubricant.**

Removal and Installation

ABS007SD

HEATED OXYGEN SENSOR 2

Refer to EM-182, "EXHAUST MANIFOLD AND THREE WAY CATALYST"

DTC P1148, P1168 CLOSED LOOP CONTROL

PFP:22690

On Board Diagnosis Logic

ABS007SE

These self-diagnoses have the one trip detection logic.

DTC No.	Trouble diagnosis name	DTC detecting condition	Possible cause
P1148 1148 (Bank 1)	Closed loop control function	The closed loop control function for bank 1 does not operate even when vehicle is driving in the specified condition.	● The heated oxygen sensor 1 circuit is open or shorted. ● Heated oxygen sensor 1 ● Heated oxygen sensor heater
P1168 1168 (Bank 2)		The closed loop control function for bank 2 does not operate even when vehicle is driving in the specified condition.	

DTC Confirmation Procedure (Up To Serial 400595 Except for Serial 400590)

ABS007SF

CAUTION:
Always drive vehicle at a safe speed.

NOTE:
If DTC Confirmation Procedure has been previously conducted, always turn ignition switch OFF and wait at least 10 seconds before conducting the next test.

TESTING CONDITION:

- **Do not raise engine speed above 3,000 rpm during the DTC Confirmation Procedure. If the engine speed limit is exceeded, retry the procedure from step 2.**
- **Before performing the following procedure, confirm that battery voltage is more than 11V at idle.**

WITH CONSULT-II

1. Start engine and warm it up to normal operating temperature.
2. Select “DATA MONITOR” mode with CONSULT-II.
3. Hold engine speed at 2,000 rpm and check one of the following.
   - “HO2S1 (B1)/(B2)” voltage should go above 0.70V at least once.
   - “HO2S1 (B1)/(B2)” voltage should go below 0.21V at least once.
     If the check result is NG, perform EC-1210, "Diagnostic Procedure" .
     If the check result is OK, perform the following step.
4. Let engine idle at least 5 minutes.
5. Maintain the following condition at least 50 consecutive seconds.

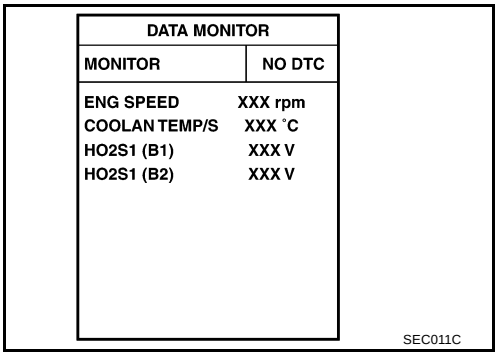

B/FUEL SCHDL	4.0 msec or more
ENG SPEED	More than 1,300 rpm
Selector lever	Suitable position
VHCL SPEED SE	More than 70 km/h (43 MPH)

During this test, P0132 and/or P0152 may be displayed on CONSULT-II screen.

6. If DTC is detected, go to EC-1210, "Diagnostic Procedure" .

DTC Confirmation Procedure (For Serial 400590 and From Serial 400596)

ABS00FPN

NOTE:
If DTC Confirmation Procedure has been previously conducted, always turn ignition switch OFF and wait at least 10 seconds before conducting the next test.
TESTING CONDITION:
Before performing the following procedure, confirm that battery voltage is more than 11V at idle.

WITH CONSULT-II

1. Turn ignition switch ON and select “DATA MONITOR” mode with CONSULT-II.
2. Start engine and warm it up to normal operating temperature.
3. Turn ignition switch OFF ant wait at least 10 seconds.
4. Start engine and let it idle for at least 2 minutes.
5. If DTC is detected, go to EC-1210, "Diagnostic Procedure" .

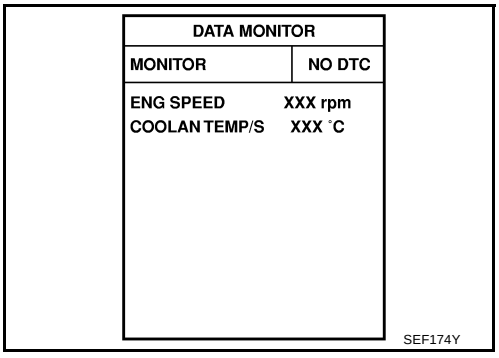

WITH GST

Follow the procedure “WITH CONSULT-II” above.

Overall Function Check (Up To Serial 400595 Except for Serial 400590)

ABS007SG

Use this procedure to check the overall function of the closed loop control. During this check, a DTC might not be confirmed.

WITH GST

1. Start engine and warm it up to normal operating temperature.
2. Set voltmeter probes between ECM terminal 16 [HO2S1 (B1) signal] or 35 [HO2S1 (B2) signal] and ground.
3. Check the following with engine speed held at 2,000 rpm constant under no load.
   - The voltage should go above 0.70V at least once.
   - The voltage should go below 0.21V at least once.
4. If NG, go to EC-1210, "Diagnostic Procedure" .

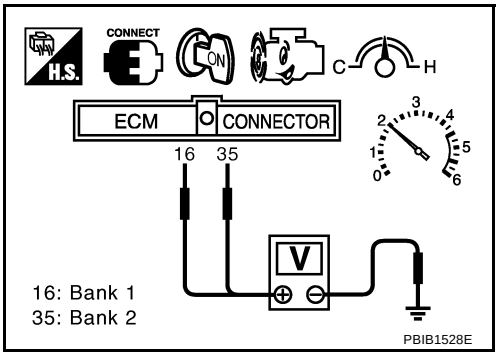

Diagnostic Procedure

ABS007SH

Perform trouble diagnosis for DTC P0133, P0153. Refer to EC-950, "Diagnostic Procedure" .

DTC P1211 TCS CONTROL UNIT

PFP:47850

Description

ABS007SI

The malfunction information related to TCS is transferred through the CAN communication line from “ABS actuator and electric unit (control unit)” to ECM.
Be sure to erase the malfunction information such as DTC not only for “ABS actuator and electric unit (control unit)” but also for ECM after TCS related repair.

On Board Diagnosis Logic

ABS007SJ

Freeze frame data is not stored in the ECM for this self-diagnosis. The MIL will not light up for this self-diagnosis.

DTC No.	Trouble diagnosis name	DTC detecting condition	Possible cause
P1211 1211	TCS control unit	ECM receives a malfunction information from “ABS actuator electric unit (control unit)”	● ABS actuator and electric unit (control unit) ● TCS related parts

DTC Confirmation Procedure

ABS007SK

TESTING CONDITION:
Before performing the following procedure, confirm that battery voltage is more than 10.5V at idle.

WITH CONSULT-II

1. Turn ignition switch ON.
2. Select “DATA MONITOR” mode with CONSULT-II.
3. Start engine and let it idle for at least 60 seconds.
4. If 1st trip DTC is detected, go to EC-1211, "Diagnostic Procedure" .

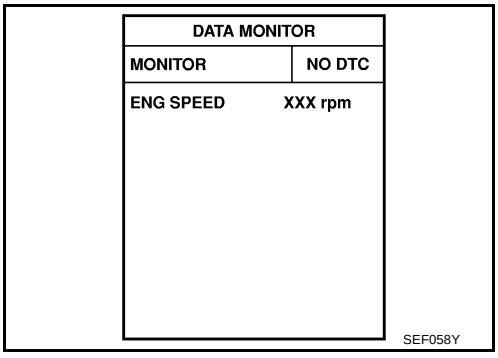

WITH GST

Follow the procedure “WITH CONSULT-II” above.

Diagnostic Procedure

ABS007SL

Go to BRC-12, "TROUBLE DIAGNOSIS" .

DTC P1212 TCS COMMUNICATION LINE

PFP:47850

Description

ABS007SM

NOTE:
If DTC P1212 is displayed with DTC U1000 or U1001, first perform the trouble diagnosis for DTC U1000, U1001. Refer to EC-862, "DTC U1000, U1001 CAN COMMUNICATION LINE" .
This CAN communication line is used to control the smooth engine operation during the TCS operation. Pulse signals are exchanged between ECM and “ABS actuator and electric unit (control unit)”.
Be sure to erase the malfunction information such as DTC not only for “ABS actuator and electric unit (control unit)” but also for ECM after TCS related repair.

On Board Diagnosis Logic

ABS007SN

Freeze frame data is not stored in the ECM for this self-diagnosis. The MIL will not light up for this self-diagnosis.

DTC No.	Trouble diagnosis name	DTC detecting condition	Possible cause
P1212 1212	TCS communication line	ECM can not receive the information from “ABS actuator and electric unit (control unit)” continuously.	● Harness or connectors (The CAN communication line is open or shorted.) ● ABS actuator and electric unit (control unit) ● Dead (Weak) battery

DTC Confirmation Procedure

ABS007SO

TESTING CONDITION:
Before performing the following procedure, confirm that battery voltage is more than 10.5V at idle.

WITH CONSULT-II

1. Turn ignition switch ON.
2. Select “DATA MONITOR” mode with CONSULT-II.
3. Start engine and let it idle for at least 10 seconds.
4. If a 1st trip DTC is detected, go to EC-1212, "Diagnostic Procedure" .

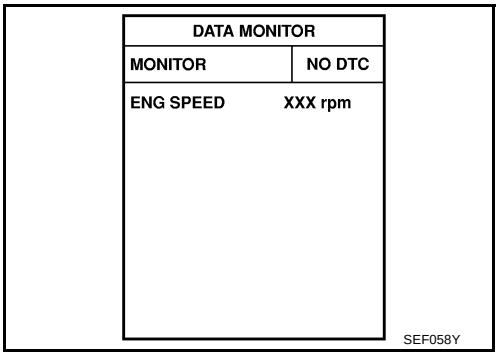

WITH GST

Follow the procedure “WITH CONSULT-II” above.

Diagnostic Procedure

ABS007SP

Go to BRC-12, "TROUBLE DIAGNOSIS" .

DTC P1217 ENGINE OVER TEMPERATURE

PFP:00000

Description

ABS009W0

SYSTEM DESCRIPTION

NOTE:
If DTC P1217 is displayed with DTC U1000 or U1001, first perform the trouble diagnosis for DTC U1000, U1001. Refer to EC-862, "DTC U1000, U1001 CAN COMMUNICATION LINE" .

Cooling Fan Control

Sensor	Input signal to ECM	ECM function	Actuator
Crankshaft position sensor (POS) Camshaft position sensor (PHASE)	Engine speed*1	Cooling fan control	IPDM E/R (Cooling fan relay)
Battery	Battery voltage*1		
Wheel sensor*2	Vehicle speed		
Engine coolant temperature sensor	Engine coolant temperature		
Air conditioner switch	Air conditioner ON signal*2		
Refrigerant pressure sensor	Refrigerant pressure		

*1: The ECM determines the start signal status by the signals of engine speed and battery voltage.
*2: This signal is sent to ECM through CAN communication line.

The ECM controls the cooling fan corresponding to the vehicle speed, engine coolant temperature, refrigerant pressure, and air conditioner ON signal. The control system has 3-step control [HIGH/MIDDLE/OFF].

Cooling Fan Operation

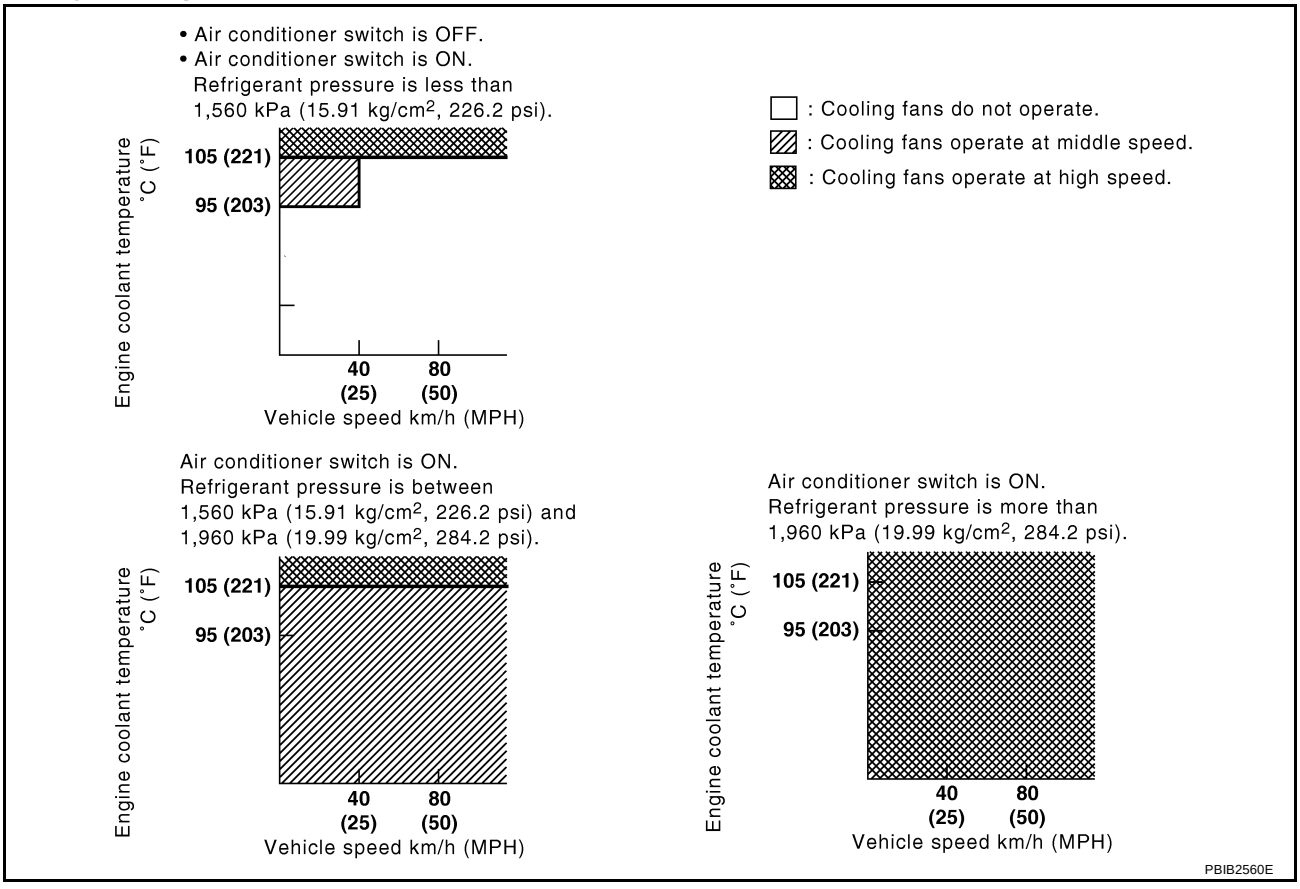

Cooling Fan Relay Operation

The ECM controls cooling fan relays in the IPDM E/R through CAN communication line.

Cooling fan speed	Cooling fan relay	
	1	3
Stop (OFF)	OFF	OFF
Middle (MID)	OFF	ON
High (HI)	ON	ON

COMPONENT DESCRIPTION

Cooling Fan Motor

The cooling fan at each speed when the current flows in the cooling fan motor as follows.

Cooling fan speed	Cooling fan motor terminals	
	(+)	(-)
Middle	1	3 and 4
	2	3 and 4
High	1 and 2	3 and 4

CONSULT-II Reference Value in Data Monitor Mode

ABS007SR

Specification data are reference values.

MONITOR ITEM	CONDITION		SPECIFICATION
COOLING FAN	● Engine: After warming up, idle the engine ● Air conditioner switch: OFF	Engine coolant temperature is 94°C (201°F) or less	OFF
		Engine coolant temperature is between 95°C (203°F) and 104°C (219°F)	MID
		Engine coolant temperature is 105°C (221°F) or more	HI

On Board Diagnosis Logic

ABS007SS

If the cooling fan or another component in the cooling system malfunctions, engine coolant temperature will rise.
When the engine coolant temperature reaches an abnormally high temperature condition, a malfunction is indicated.
This self-diagnosis has the one trip detection logic.

DTC No.	Trouble diagnosis name	DTC detecting condition	Possible cause
P1217 1217	Engine over temperature (Overheat)	● Cooling fan does not operate properly (Overheat). ● Cooling fan system does not operate properly (Overheat). ● Engine coolant was not added to the system using the proper filling method. ● Engine coolant is not within the specified range.	● Harness or connectors (The cooling fan circuit is open or shorted.) ● Cooling fan ● Radiator hose ● Radiator ● Radiator cap ● Water pump ● Thermostat For more information, refer to EC-1223, "Main 13 Causes of Overheating" .

CAUTION:
When a malfunction is indicated, be sure to replace the coolant. Refer to CO-37, "Changing Engine Coolant" . Also, replace the engine oil. Refer to LU-27, "Changing Engine Oil" .

1. **Fill radiator with coolant up to specified level with a filling speed of 2 liters per minute. Be sure to use coolant with the proper mixture ratio. Refer to MA-13, "Anti-Freeze Coolant Mixture Ratio" .**
2. **After refilling coolant, run engine to ensure that no water-flow noise is emitted.**

Overall Function Check

ABS007ST

Use this procedure to check the overall function of the cooling fan. During this check, a DTC might not be confirmed.

WARNING:
Never remove the radiator cap when the engine is hot. Serious burns could be caused by high pressure fluid escaping from the radiator.
Wrap a thick cloth around cap. Carefully remove the cap by turning it a quarter turn to allow built-up pressure to escape. Then turn the cap all the way off.

WITH CONSULT-II

1. Check the coolant level in the reservoir tank and radiator.
   Allow engine to cool before checking coolant level.
   If the coolant level in the reservoir tank and/or radiator is below the proper range, skip the following steps and go to EC-1219, "Diagnostic Procedure" .
2. Confirm whether customer filled the coolant or not. If customer filled the coolant, skip the following steps and go to EC-1219, "Diagnostic Procedure" .
3. Turn ignition switch ON.

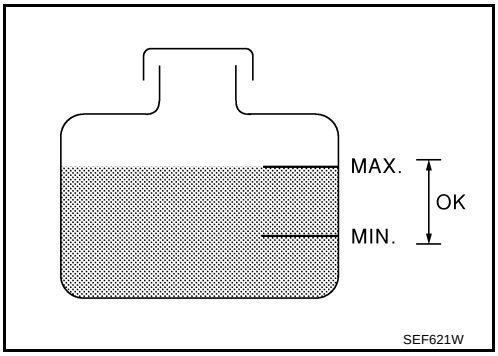

4. Perform “COOLING FAN” in “ACTIVE TEST” mode with CONSULT-II.
5. If the results are NG, go to EC-1219, "Diagnostic Procedure" .

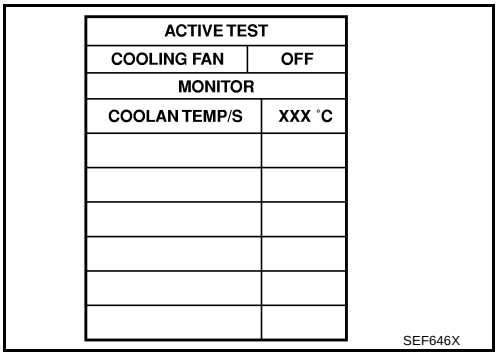

ACTIVE TEST	
COOLING FAN	OFF
MONITOR	
COOLAN TEMP/S	XXX °C

SEF646X

WITH GST

1. Check the coolant level in the reservoir tank and radiator.
   Allow engine to cool before checking coolant level.
   If the coolant level in the reservoir tank and/or radiator is below the proper range, skip the following steps and go to EC-1219, "Diagnostic Procedure" .
2. Confirm whether customer filled the coolant or not. If customer filled the coolant, skip the following steps and go to EC-1219, "Diagnostic Procedure" .
3. Disconnect engine coolant temperature sensor harness connector.

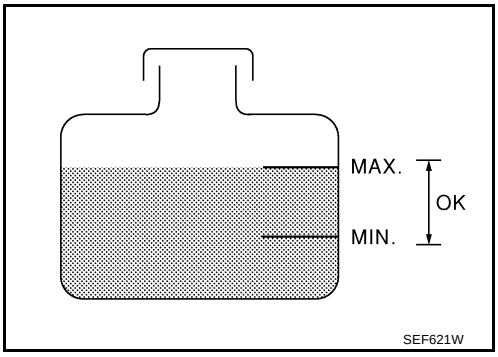

4. Connect 200Ω resister to the engine coolant temperature sensor harness connector.
5. Start engine and make sure that cooling fan operates at middle speed.
   Be careful not to overheat engine.
   If NG, go to EC-1219, "Diagnostic Procedure" .
   If OK, go to the following step.
6. Turn ignition switch OFF.
7. Disconnect 200Ω resister from engine coolant temperature sensor harness connector.

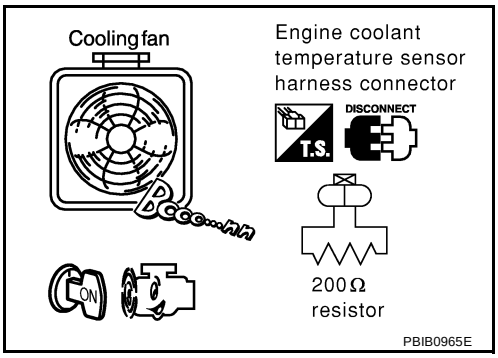

8. Connect 150Ω resistor to engine coolant temperature sensor harness connector.
9. Start engine and make sure that cooling fan operates at higher speed than low speed.
   Be careful not to overheat engine.
10. If NG, go to EC-1219, "Diagnostic Procedure" .

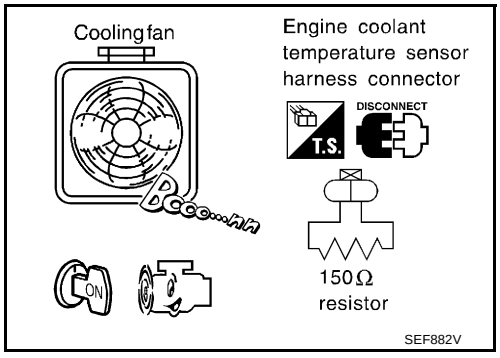

Wiring Diagram

ABS007SU

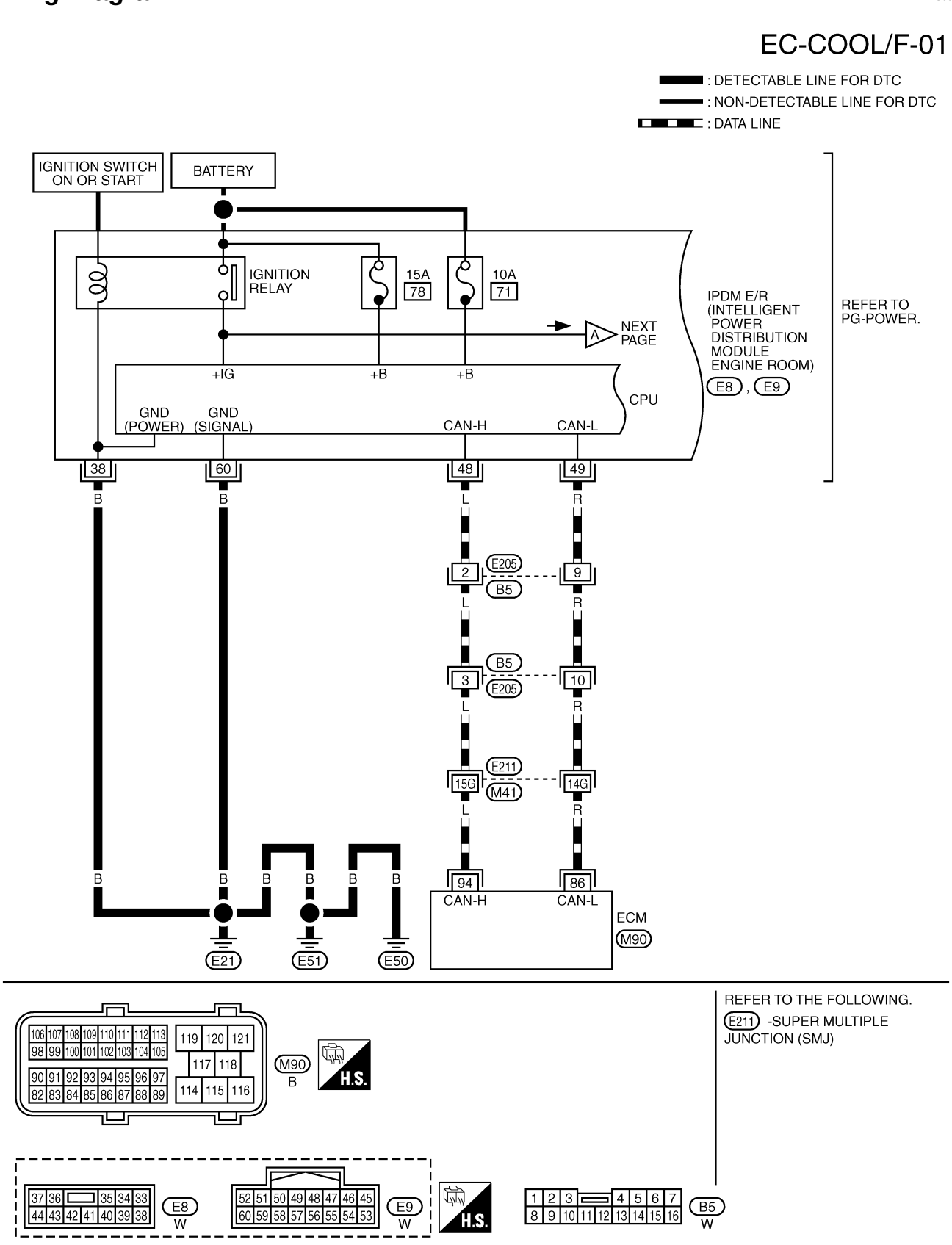

EC-COOL/F-02

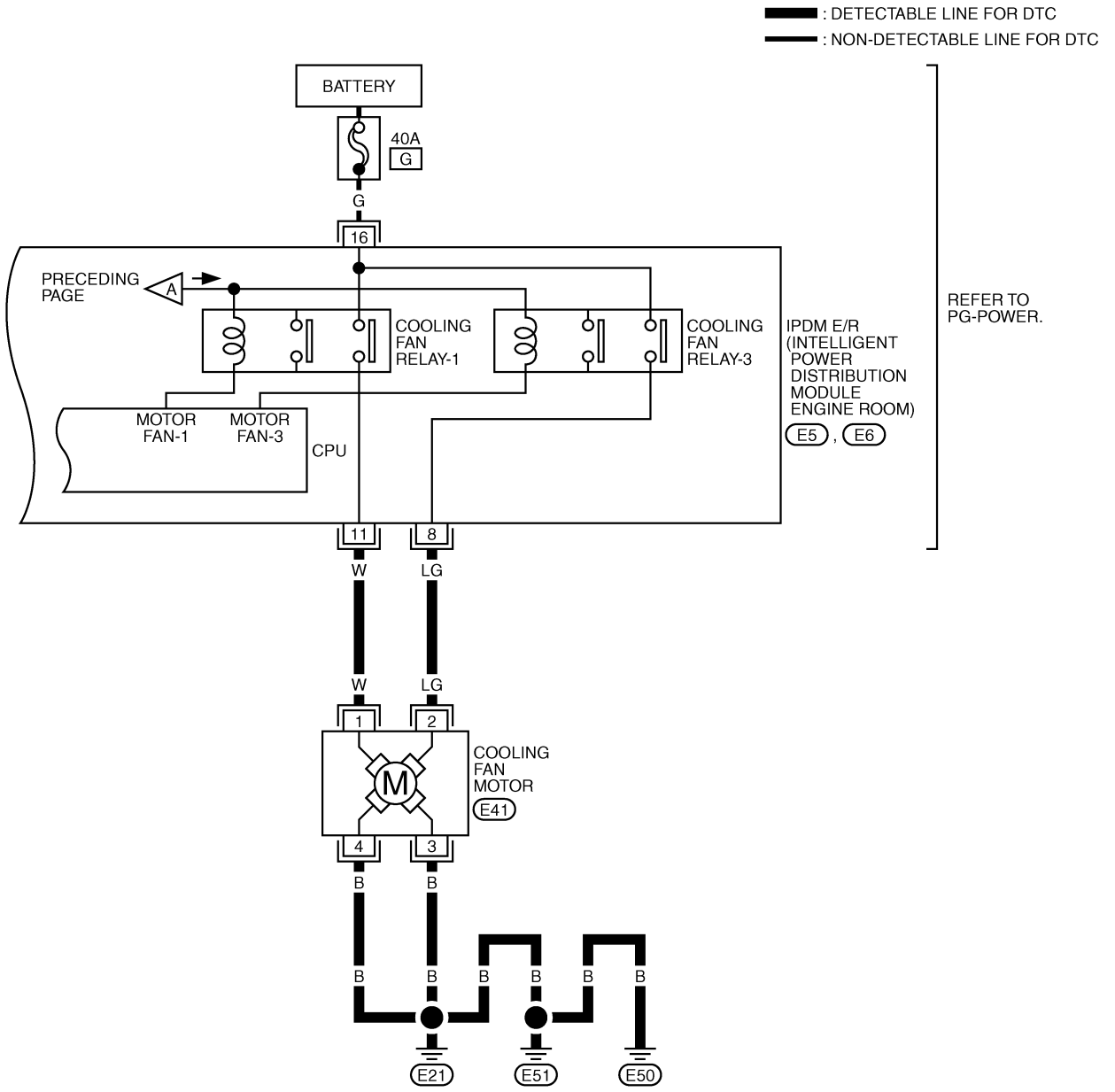

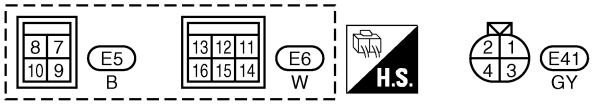

TBWM0255E

Diagnostic Procedure

ABS007SV

1. CHECK COOLING FAN (CRANKSHAFT DRIVEN)

1. Start engine and let id idle.
2. Make sure that cooling fan (crankshaft driven) operates normally.

OK or NG

OK (With CONSULT-II)>>GO TO 2.
OK (Without CONSULT-II)>>GO TO 4.
NG >> Check cooling fan (crankshaft driven). Refer to CO-49, "COOLING FAN" .

2. CHECK COOLING FAN MIDDLE SPEED OPERATION

With CONSULT-II

1. Start engine and let it idle.
2. Select “COOLING FAN” in “ACTIVE TEST” mode with CONSULT-II, and touch “MID” on the CONSULT-II screen.
3. Make sure that cooling fan operates.

OK or NG

OK >> GO TO 3.
NG >> Check cooling fan middle speed control circuit. (Go to EC-1221, "PROCEDURE A" .)

ACTIVE TEST	
COOLING FAN	MID
MONITOR	
COOLAN TEMP/S	XXX °C

PBIB1668E

3. CHECK COOLING FAN HIGH SPEED OPERATION

With CONSULT-II

1. Select “COOLING FAN” in “ACTIVE TEST” mode with CONSULT-II and touch “HI” on the CONSULT-II screen.
2. Make sure that cooling fan operates at higher speed than middle speed.

OK or NG

OK >> GO TO 6.
NG >> Check cooling fan high speed control circuit. (Go to EC-1223, "PROCEDURE B" .)

ACTIVE TEST	
COOLING FAN	HIGH
MONITOR	
COOLAN TEMP/S	XXX °C

SEF785Z

4. CHECK COOLING FAN MIDDLE SPEED OPERATION

Without CONSULT-II

1. Disconnect engine coolant temperature sensor harness connector.
2. Connect 200Ω resistor to engine coolant temperature sensor harness connector.
3. Start engine and let it idle.
4. Make sure that cooling fan operates.

OK or NG

OK >> GO TO 5.
NG >> Check cooling fan middle speed control circuit. (Go to EC-1221, "PROCEDURE A" .)

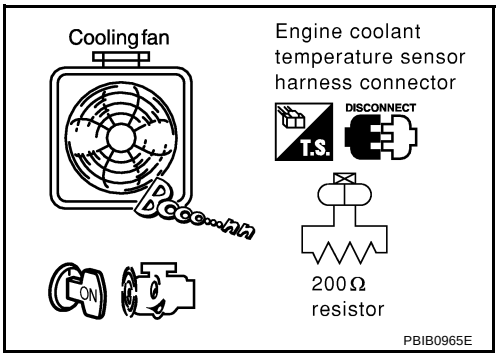

5. CHECK COOLING FAN HIGH SPEED OPERATION

Without CONSULT-II

1. Disconnect 200Ω resister to the engine coolant temperature sensor harness connector.
2. Connect 150Ω resistor to engine coolant temperature sensor harness connector.
3. Start engine and let it idle.
4. Make sure that cooling fan operates at higher speed than middle speed.

OK or NG

OK >> GO TO 6.
NG >> Check cooling fan control circuit. (Go to EC-1223, "PROCEDURE B" .)

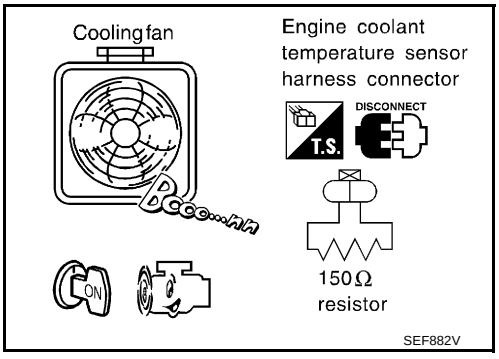

6. CHECK COOLING SYSTEM FOR LEAK

Apply pressure to the cooling system with a tester, and check if the pressure drops.

Testing pressure: 157 kPa (1.6 kg/cm^2 , 23 psi)

CAUTION:
Higher than the specified pressure may cause radiator damage. Pressure should not drop.

OK or NG

OK >> GO TO 7.
NG >> Check the following for leak. Refer to CO-37, "LEAK CHECK" .
- Hose
- Radiator
- Water pump

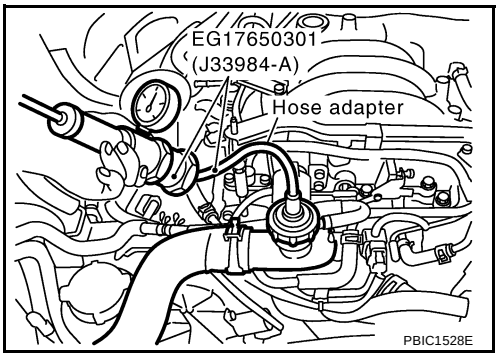

7. CHECK RADIATOR CAP

Apply pressure to cap with a tester.

Radiator cap relief pressure: **59 - 98 kPa (0.6 - 1.0 kg/cm^2 , 9 - 14 psi)**

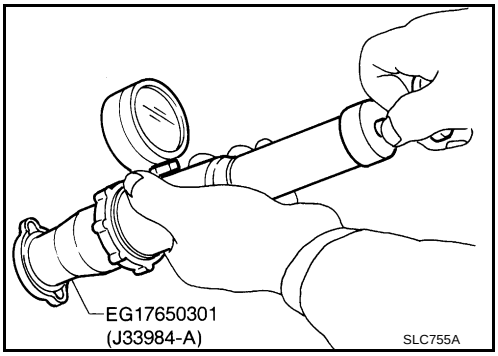

OK or NG

OK >> GO TO 8.
NG >> Replace radiator cap.

8. CHECK COMPONENT PARTS

Check the following.

- Thermostat. (Refer to CO-53, "THERMOSTAT AND WATER CONTROL VALVE" .)
- Water control valve. (Refer to CO-53, "THERMOSTAT AND WATER CONTROL VALVE" .)
- Engine coolant temperature sensor. (Refer to EC-919, "Component Inspection" .)

OK or NG

OK >> GO TO 9.
NG >> Replace malfunctioning component.

9. CHECK MAIN 13 CAUSES

If the cause cannot be isolated, go to EC-1223, "Main 13 Causes of Overheating" .

>> **INSPECTION END**

PROCEDURE A

1. CHECK POWER SUPPLY CIRCUIT

1. Turn ignition switch OFF.
2. Disconnect IPDM E/R harness connector E6.
3. Check voltage between IPDM E/R terminal 16 and ground with CONSULT-II or tester.

Voltage: Battery voltage

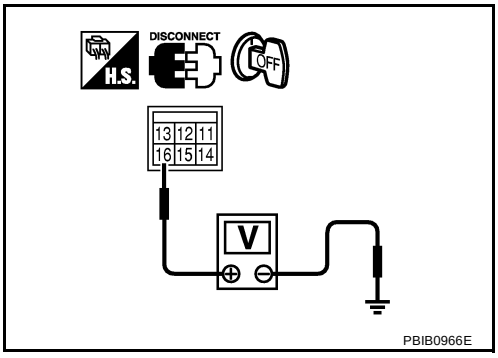

OK or NG

OK >> GO TO 3.
NG >> GO TO 2.

2. DETECT MALFUNCTIONING PART

Check the following.

- 40A fusible link
- Harness for open or short between IPDM E/R and battery

>> Repair open circuit or short to ground or short to power in harness or connectors.

3. CHECK COOLING FAN MOTOR CIRCUIT FOR OPEN OR SHORT

1. Disconnect IPDM E/R harness connector E5.
2. Disconnect cooling fan motor harness connector.
3. Check harness continuity between cooling fan motor terminal 2 and IPDM E/R terminal 8.
   Refer to wiring diagram.

   Continuity should exist.

4. Also check harness for short to ground and short to power.

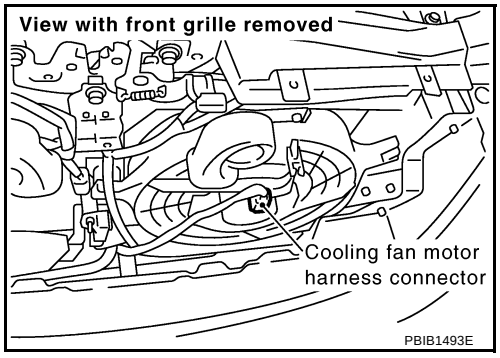

OK or NG

OK >> GO TO 4.
NG >> Repair open circuit or short to ground or short to power in harness or connectors.

4. CHECK COOLING FAN MOTOR GROUND CIRCUIT FOR OPEN OR SHORT

1. Check harness continuity between the following;
   cooling fan motor terminal 3 and ground,
   cooling fan motor terminal 4 and ground.
   Refer to wiring diagram.

   Continuity should exist.

2. Also check harness for short to power.

OK or NG

OK >> GO TO 5.
NG >> Repair open circuit or short to power in harness or connectors.

5. CHECK COOLING FAN MOTOR

Refer to EC-1224, "Component Inspection" .

OK or NG

OK >> GO TO 6.
NG >> Replace cooling fan motor.

6. CHECK INTERMITTENT INCIDENT

Perform EC-854, "TROUBLE DIAGNOSIS FOR INTERMITTENT INCIDENT" .

OK or NG

OK >> Replace IPDM E/R. Refer to PG-18, "IPDM E/R (INTELLIGENT POWER DISTRIBUTION MODULE ENGINE ROOM)" .
NG >> Repair or replace harness connectors.

PROCEDURE B

1. CHECK COOLING FAN MOTOR CIRCUIT FOR OPEN OR SHORT

1. Disconnect IPDM E/R harness connector E6.
2. Disconnect cooling fan motor harness connector.
3. Check harness continuity between cooling fan motor terminal 1 and IPDM E/R terminal 11.
   Refer to wiring diagram.

   Continuity should exist.

4. Also check harness for short to ground and short to power.

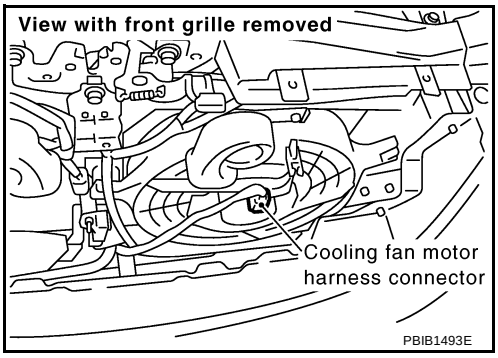

OK or NG

OK >> GO TO 2.
NG >> Repair open circuit or short to ground or short to power in harness or connectors.

2. CHECK COOLING FAN MOTOR

Refer to EC-1224, "Component Inspection" .

OK or NG

OK >> GO TO 3.
NG >> Replace cooling fan motor.

3. CHECK INTERMITTENT INCIDENT

Perform EC-854, "TROUBLE DIAGNOSIS FOR INTERMITTENT INCIDENT" .

OK or NG

OK >> Replace IPDM E/R. Refer to PG-18, "IPDM E/R (INTELLIGENT POWER DISTRIBUTION MODULE ENGINE ROOM)" .
NG >> Repair or replace harness connectors.

Main 13 Causes of Overheating

ABS007SW

Engine	Step	Inspection item	Equipment	Standard	Reference page
OFF	1	● Blocked radiator ● Blocked condenser ● Blocked radiator grille ● Blocked bumper	● Visual	No blocking	—
	2	● Coolant mixture	● Coolant tester	50 - 50% coolant mixture	MA-13
	3	● Coolant level	● Visual	Coolant up to MAX level in reservoir tank and radiator filler neck	CO-37
	4	● Radiator cap	● Pressure tester	59 - 98 kPa (0.6 - 1.0 kg/cm^2 , 9 - 14 psi) (Limit)	CO-43
ON*2	5	● Coolant leaks	● Visual	No leaks	CO-37
ON*2	6	● Thermostat	● Touch the upper and lower radiator hoses	Both hoses should be hot	CO-53
ON*1	7	● Cooling fan	● CONSULT-II	Operating	See trouble diagnosis for DTC P1217 (EC-1213).
OFF	8	● Combustion gas leak	● Color checker chemical tester 4 Gas analyzer	Negative	—

Engine	Step	Inspection item	Equipment	Standard	Reference page
ON*3	9	● Coolant temperature gauge	● Visual	Gauge less than 3/4 when driving	—
		● Coolant overflow to reservoir tank	● Visual	No overflow during driving and idling	CO-37
OFF*4	10	● Coolant return from reservoir tank to radiator	● Visual	Should be initial level in reservoir tank	CO-37
OFF	11	● Water control valve	● Remove and inspect the valve	Within the specified value	CO-53
OFF	12	● Cylinder head	● Straight gauge feeler gauge	0.1 mm (0.004 in) Maximum distortion (warping)	EM-229
	13	● Cylinder block and pistons	● Visual	No scuffing on cylinder walls or piston	EM-245

*1: Turn the ignition switch ON.
*2: Engine running at 3,000 rpm for 10 minutes.
*3: Drive at 90 km/h (55 MPH) for 30 minutes and then let idle for 10 minutes.
*4: After 60 minutes of cool down time.
For more information, refer to CO-33, "OVERHEATING CAUSE ANALYSIS" .

Component Inspection

ABS007SX

COOLING FAN MOTOR

1. Disconnect cooling fan motor harness connector.
2. Supply cooling fan motor terminals with battery voltage and check operation.

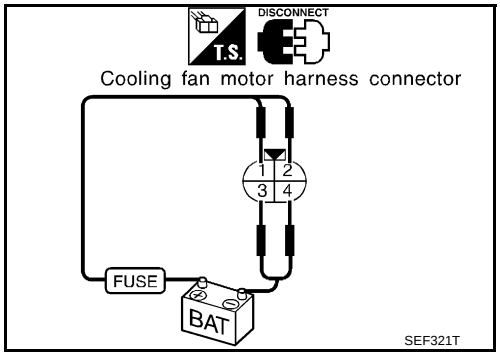

	Speed	Terminals	
		(+)	(–)
Cooling fan motor	Middle	1	3 and 4
		2	3 and 4
	High	1, 2	3, 4

Cooling fan motor should operate.
If NG, replace cooling fan motor.

DTC P1225 TP SENSOR

PFP:16119

Component Description

ABS007T5

Electric throttle control actuator consists of throttle control motor, throttle position sensor, etc. The throttle position sensor responds to the throttle valve movement.
The throttle position sensor has the two sensors. These sensors are a kind of potentiometers which transform the throttle valve position into output voltage, and emit the voltage signal to the ECM. In addition, these sensors detect the opening and closing speed of the throttle valve and feed the voltage signals to the ECM. The ECM judges the current opening angle of the throttle valve from these signals and the ECM controls the throttle control motor to make the throttle valve opening angle properly in response to driving condition.

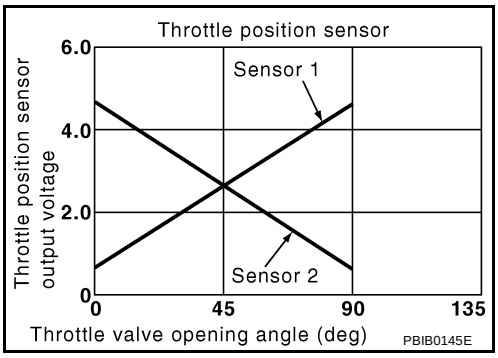

On Board Diagnosis Logic

ABS007T6

The MIL will not light up for this diagnosis.

DTC No.	Trouble diagnosis name	DTC detecting condition	Possible cause
P1225 1225	Closed throttle position learning performance problem	Closed throttle position learning value is excessively low.	● Electric throttle control actuator (TP sensor 1 and 2)

DTC Confirmation Procedure

ABS007T7

NOTE:
If DTC Confirmation Procedure has been previously conducted, always turn ignition switch OFF and wait at least 10 seconds before conducting the next test.
TESTING CONDITION:
Before performing the following procedure, confirm that battery voltage is more than 10V at idle.

WITH CONSULT-II

1. Turn ignition switch ON.
2. Select “DATA MONITOR” mode with CONSULT-II.
3. Turn ignition switch OFF, wait at least 10 seconds.
4. Turn ignition switch ON.
5. If 1st trip DTC is detected, go to EC-1226, "Diagnostic Procedure" .

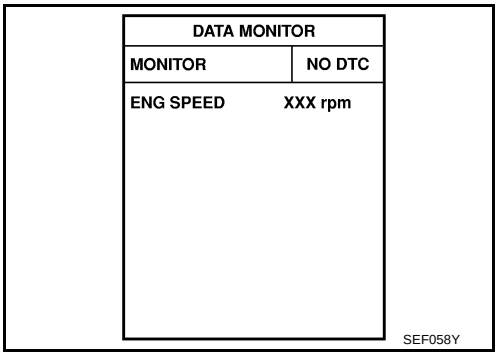

WITH GST

Follow the procedure “WITH CONSULT-II” above.

Diagnostic Procedure

ABS007T8

1. CHECK ELECTRIC THROTTLE CONTROL ACTUATOR VISUALLY

1. Turn ignition switch OFF.
2. Remove the intake air duct.
3. Check if foreign matter is caught between the throttle valve and the housing.

OK or NG

OK >> GO TO 2.
NG >> Remove the foreign matter and clean the electric throttle control actuator inside.

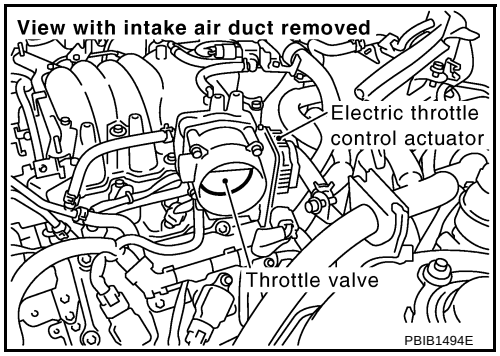

2. REPLACE ELECTRIC THROTTLE CONTROL ACTUATOR

1. Replace the electric throttle control actuator.
2. Perform EC-786, "Throttle Valve Closed Position Learning" .
3. Perform EC-787, "Idle Air Volume Learning" .

>> **INSPECTION END**

Removal and Installation

ABS007T9

ELECTRIC THROTTLE CONTROL ACTUATOR

Refer to EM-178, "INTAKE MANIFOLD" .

DTC P1226 TP SENSOR

PFP:16119

Component Description

ABS007TA

Electric throttle control actuator consists of throttle control motor, throttle position sensor, etc. The throttle position sensor responds to the throttle valve movement.
The throttle position sensor has the two sensors. These sensors are a kind of potentiometers which transform the throttle valve position into output voltage, and emit the voltage signal to the ECM. In addition, these sensors detect the opening and closing speed of the throttle valve and feed the voltage signals to the ECM. The ECM judges the current opening angle of the throttle valve from these signals and the ECM controls the throttle control motor to make the throttle valve opening angle properly in response to driving condition.

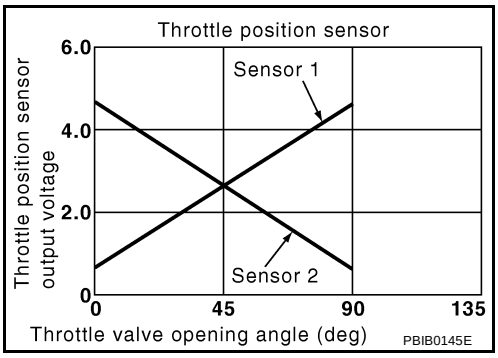

On Board Diagnosis Logic

ABS007TB

The MIL will not light up for this diagnosis.

DTC No.	Trouble diagnosis name	DTC detecting condition	Possible cause
P1226 1226	Closed throttle position learning performance problem	Closed throttle position learning is not performed successfully, repeatedly.	● Electric throttle control actuator (TP sensor 1 and 2)

DTC Confirmation Procedure

ABS007TC

NOTE:
If DTC Confirmation Procedure has been previously conducted, always turn ignition switch OFF and wait at least 10 seconds before conducting the next test.
TESTING CONDITION:
Before performing the following procedure, confirm that battery voltage is more than 10V at idle.

WITH CONSULT-II

1. Turn ignition switch ON.
2. Select “DATA MONITOR” mode with CONSULT-II.
3. Turn ignition switch OFF, wait at least 10 seconds.
4. Turn ignition switch ON.
5. Repeat steps 3 and 4 for 32 times.
6. If 1st trip DTC is detected, go to EC-1228, "Diagnostic Procedure" .

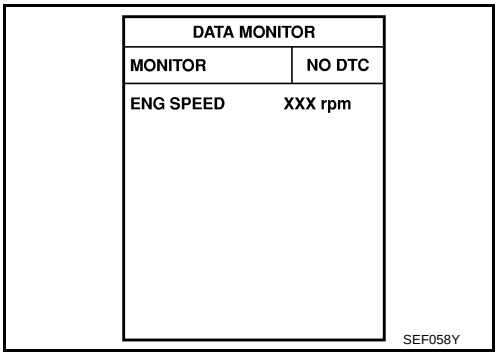

WITH GST

Follow the procedure “WITH CONSULT-II” above.

Diagnostic Procedure

ABS007TD

1. CHECK ELECTRIC THROTTLE CONTROL ACTUATOR VISUALLY

1. Turn ignition switch OFF.
2. Remove the intake air duct.
3. Check if foreign matter is caught between the throttle valve and the housing.

OK or NG

OK >> GO TO 2.
NG >> Remove the foreign matter and clean the electric throttle control actuator inside.

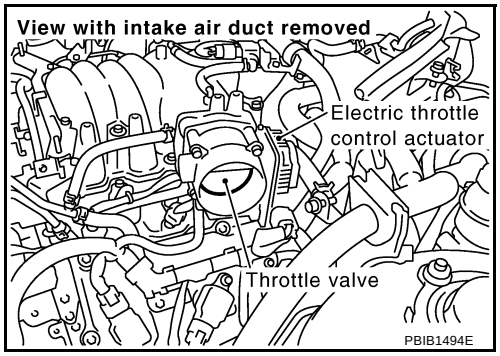

2. REPLACE ELECTRIC THROTTLE CONTROL ACTUATOR

1. Replace the electric throttle control actuator.
2. Perform EC-786, "Throttle Valve Closed Position Learning" .
3. Perform EC-787, "Idle Air Volume Learning" .

>> **INSPECTION END**

Removal and Installation

ABS007TE

ELECTRIC THROTTLE CONTROL ACTUATOR

Refer to EM-178, "INTAKE MANIFOLD" .

DTC P1229 SENSOR POWER SUPPLY

PFP:16119

On Board Diagnosis Logic

ABS007TF

This self-diagnosis has the one trip detection logic.

DTC No.	Trouble diagnosis name	DTC detecting condition	Possible cause
P1229 1229	Sensor power supply circuit short	ECM detects a voltage of power source for sensor is excessively low or high.	● Harness or connectors (APP sensor 1 circuit is shorted.) (EVAP control system pressure sensor is shorted.) (Refrigerant pressure sensor circuit is shorted.) (PSP sensor circuit is shorted.) ● Accelerator pedal position sensor ● EVAP control system pressure sensor ● Refrigerant pressure sensor ● Power steering pressure sensor

FAIL-SAFE MODE

When the malfunction is detected, ECM enters fail-safe mode and the MIL lights up.

Engine operation condition in fail-safe mode
ECM stops the electric throttle control actuator control, throttle valve is maintained at a fixed opening (approx. 5 degrees) by the return spring.

DTC Confirmation Procedure

ABS007TG

NOTE:
If DTC Confirmation Procedure has been previously conducted, always turn ignition switch OFF and wait at least 10 seconds before conducting the next test.

TESTING CONDITION:
Before performing the following procedure, confirm that battery voltage is more than 10V at idle.

WITH CONSULT-II

1. Turn ignition switch ON.
2. Select “DATA MONITOR” mode with CONSULT-II.
3. Start engine and let it idle for 1 second.
4. If DTC is detected, go to EC-1231, "Diagnostic Procedure" .

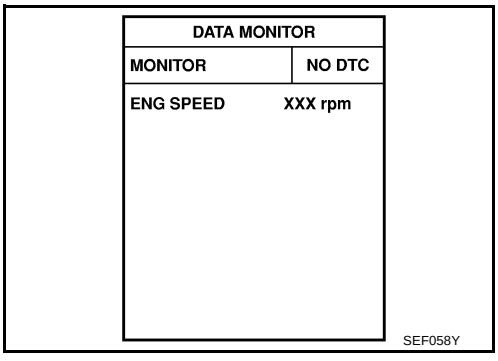

WITH GST

Follow the procedure “WITH CONSULT-II” above.

Wiring Diagram

ABS007TH

EC-SEN/PW-01

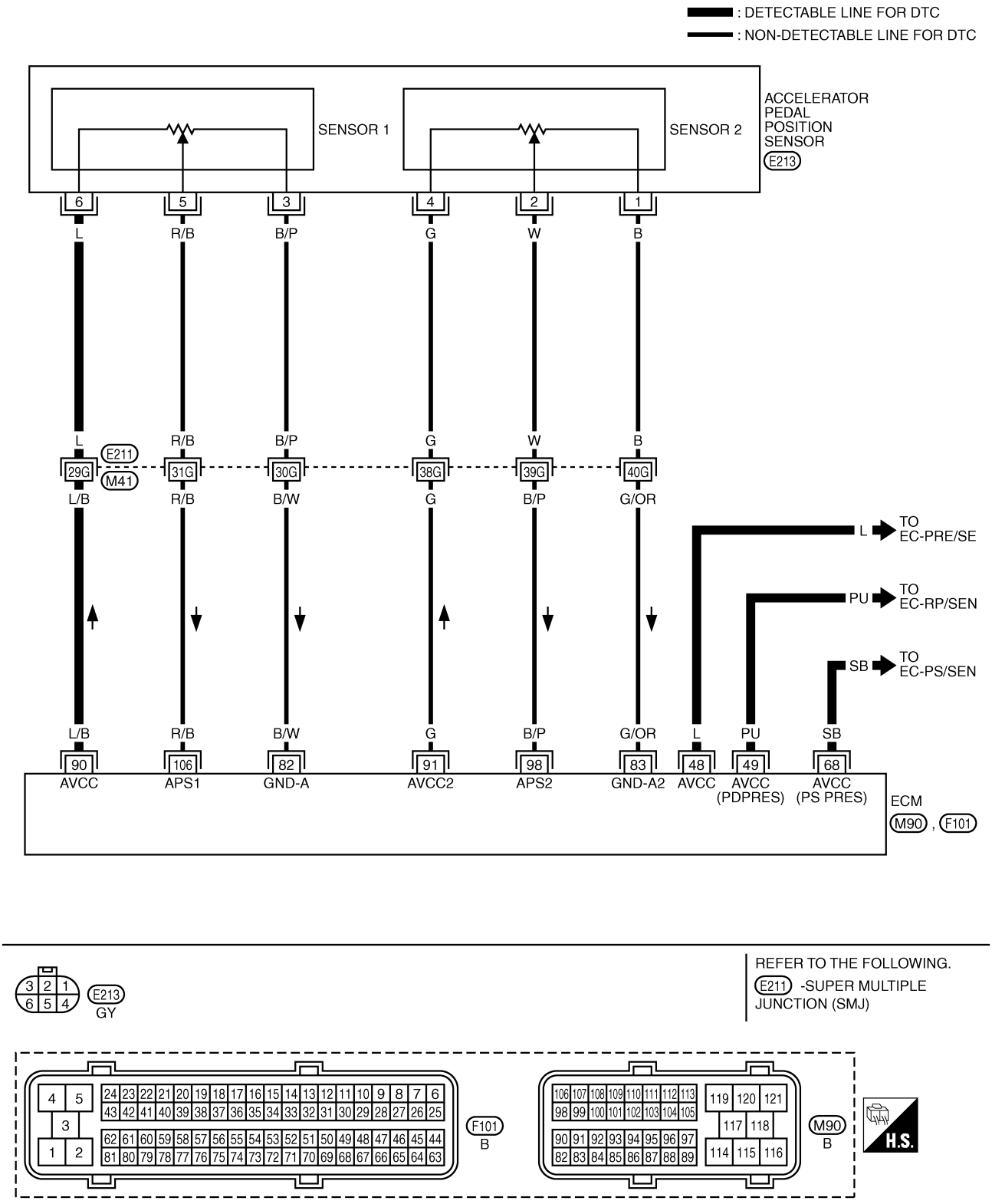

Specification data are reference values and are measured between each terminal and ground.

CAUTION:
Do not use ECM ground terminals when measuring input/output voltage. Doing so may result in damage to the ECM's transistor. Use a ground other than ECM terminals, such as the ground.

TERMINAL NO.	WIRE COLOR	ITEM	CONDITION	DATA (DC Voltage)
48	L	Sensor power supply (EVAP control system pressure sensor)	**[Ignition switch: ON]**	Approximately 5V
49	PU	Sensor power supply (Refrigerant pressure sensor)	**[Ignition switch: ON]**	Approximately 5V
68	SB	Sensor power supply (Power steering pressure sensor)	**[Ignition switch: ON]**	Approximately 5V
90	L/B	Sensor power supply (APP sensor 1)	**[Ignition switch: ON]**	Approximately 5V

Diagnostic Procedure

ABS007TI

1. CHECK GROUND CONNECTIONS

1. Turn ignition switch OFF.
2. Loosen and retighten three ground screws on the body.
   Refer to EC-861, "Ground Inspection" .

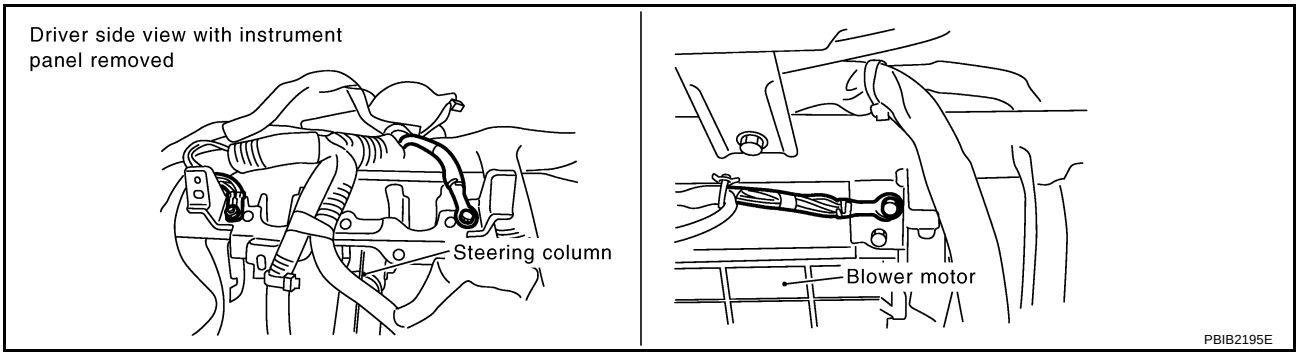

OK or NG

OK >> GO TO 2.
NG >> Repair or replace ground connections.

2. CHECK ACCELERATOR PEDAL POSITION SENSOR 1 POWER SUPPLY CIRCUIT

1. Disconnect accelerator pedal position (APP) sensor harness connector.
2. Turn ignition switch ON.
3. Check voltage between APP sensor terminal 6 and ground with CONSULT-II or tester.

Voltage: Approximately 5V

OK or NG

OK >> GO TO 5.
NG >> GO TO 3.

3. CHECK SENSOR POWER SUPPLY CIRCUITS

Check harness for short to power and short to ground, between the following terminals.

ECM terminal	Sensor terminal	Reference Wiring Diagram
90	APP sensor terminal 6	EC-1304
48	EVAP control system pressure sensor terminal 3	EC-1088
49	Refrigerant pressure sensor terminal 1	EC-1365
68	PSP sensor terminal 1	EC-1130

OK or NG

OK >> GO TO 4.
NG >> Repair short to ground or short to power in harness or connectors.

4. CHECK COMPONENTS

Check the following.

- EVAP control system pressure sensor (Refer to EC-1091, "Component Inspection" .)
- Refrigerant pressure sensor (Refer to ATC-90, "COMPONENT INSPECTION" .)
- Power steering pressure sensor (Refer to EC-1133, "Component Inspection" .)

OK or NG

OK >> GO TO 7.
NG >> Replace malfunctioning component.

5. CHECK APP SENSOR

Refer to EC-1307, "Component Inspection" .

OK or NG

OK >> GO TO 7.
NG >> GO TO 6.

6. REPLACE ACCELERATOR PEDAL ASSEMBLY

1. Replace accelerator pedal assembly.
2. Perform EC-786, "Accelerator Pedal Released Position Learning" .
3. Perform EC-786, "Throttle Valve Closed Position Learning" .
4. Perform EC-787, "Idle Air Volume Learning" .

>> **INSPECTION END**

7. CHECK INTERMITTENT INCIDENT

Refer to EC-854, "TROUBLE DIAGNOSIS FOR INTERMITTENT INCIDENT" .

>> **INSPECTION END**

DTC P1444 EVAP CANISTER PURGE VOLUME CONTROL SOLENOID VALVE

PFP:14920

Description

ABS007TJ

SYSTEM DESCRIPTION

Sensor	Input signal to ECM	ECM function	Actuator
Crankshaft position sensor (POS) Camshaft position sensor (PHASE)	Engine speed*1	EVAP canister purge flow control	EVAP canister purge volume control solenoid valve
Mass air flow sensor	Amount of intake air		
Engine coolant temperature sensor	Engine coolant temperature		
Battery	Battery voltage*1		
Throttle position sensor	Throttle position		
Accelerator pedal position sensor	Accelerator pedal position		
Heated oxygen sensor 1	Density of oxygen in exhaust gas (Mixture ratio feedback signal)		
Fuel tank temperature sensor	Fuel temperature in fuel tank		
Wheel sensor*2	Vehicle speed		

*1: ECM determines the start signal status by the signals of engine speed and battery voltage.
*2: This signal is sent to the ECM through CAN communication line.

This system controls flow rate of fuel vapor from the EVAP canister. The opening of the vapor by-pass passage in the EVAP canister purge volume control solenoid valve changes to control the flow rate. The EVAP canister purge volume control solenoid valve repeats ON/OFF operation according to the signal sent from the ECM. The opening of the valve varies for optimum engine control. The optimum value stored in the ECM is determined by considering various engine conditions. When the engine is operating, the flow rate of fuel vapor from the EVAP canister is regulated as the air flow changes.

COMPONENT DESCRIPTION

The EVAP canister purge volume control solenoid valve uses a ON/OFF duty to control the flow rate of fuel vapor from the EVAP canister. The EVAP canister purge volume control solenoid valve is moved by ON/OFF pulses from the ECM. The longer the ON pulse, the greater the amount of fuel vapor that will flow through the valve.

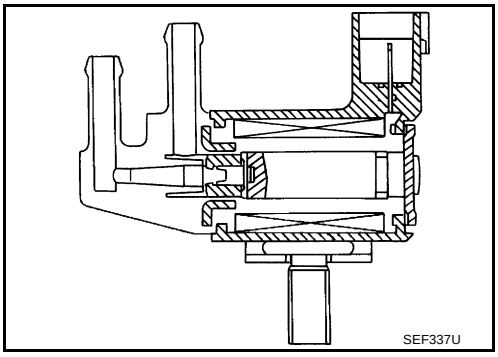

CONSULT-II Reference Value in Data Monitor Mode

ABS007TK

Specification data are reference values.

MONITOR ITEM	CONDITION		SPECIFICATION
PURG VOL C/V	● Engine: After warming up ● Selector lever: P or N ● Air conditioner switch: OFF ● No load	Idle	0%
		2,000 rpm	—

On Board Diagnosis Logic

ABS007TL

DTC No.	Trouble diagnosis name	DTC detecting condition	Possible cause
P1444 1444	EVAP canister purge volume control solenoid valve	The canister purge flow is detected during the specified driving conditions, even when EVAP canister purge volume control solenoid valve is completely closed.	● EVAP control system pressure sensor ● EVAP canister purge volume control solenoid valve (The valve is stuck open.) ● EVAP canister vent control valve ● EVAP canister ● Hoses (Hoses are connected incorrectly or clogged.)

DTC Confirmation Procedure

ABS007TM

NOTE:
If DTC Confirmation Procedure has been previously conducted, always turn ignition switch OFF and wait at least 10 seconds before conducting the next test.
TESTING CONDITION:
Always perform test at a temperature of 5°C (41°F) or more.

WITH CONSULT-II

1. Start engine and warm it up to normal operating temperature.
2. Turn ignition switch OFF and wait at least 10 seconds.
3. Turn ignition switch ON.
4. Select “PURG VOL CN/V P1444” of “EVAPORATIVE SYSTEM” in “DTC WORK SUPPORT” mode with CONSULT-II.
5. Touch “START”.

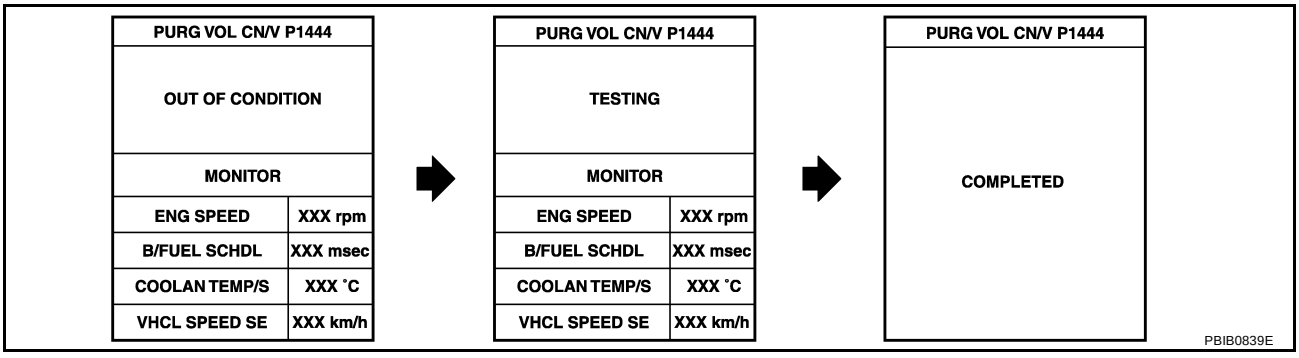

6. Start engine and let it idle until “TESTING” on CONSULT-II changes to “COMPLETED”. (It will take approximately 10 seconds.)
   If “TESTING” is not displayed after 5 minutes, retry from step 2.
7. Make sure that “OK” is displayed after touching “SELF-DIAG RESULTS”. If “NG” is displayed, refer to EC-1237, "Diagnostic Procedure" .

WITH GST

1. Start engine and warm it up to normal operating temperature.
2. Turn ignition switch OFF and wait at least 10 seconds.
3. Start engine and let it idle for at least 20 seconds.
4. Select “Service $07” with GST.
5. If 1st trip DTC is detected, go to EC-1237, "Diagnostic Procedure" .

Wiring Diagram

ABS007TN

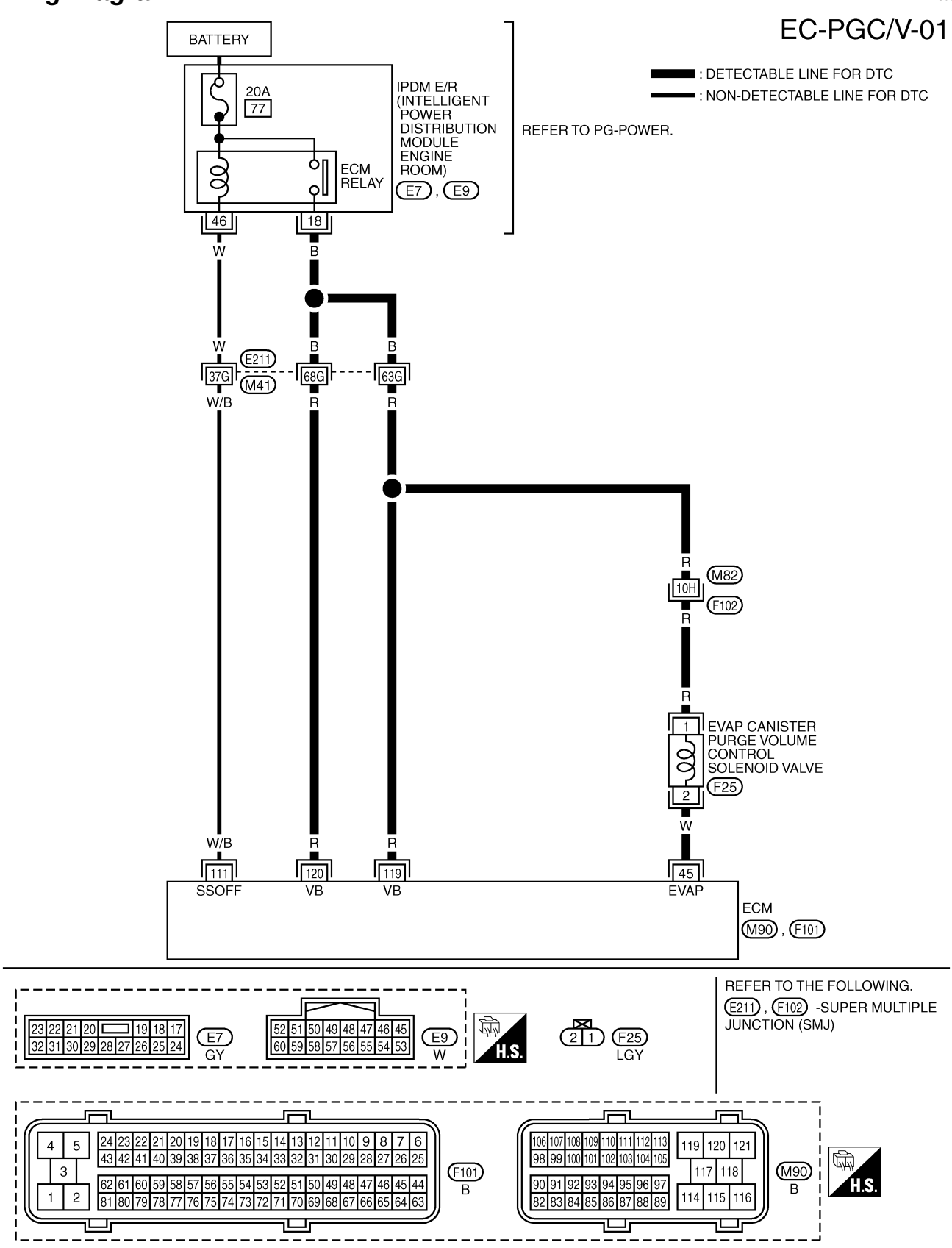

Specification data are reference values and are measured between each terminal and ground.
Pulse signal is measured by CONSULT-II.

CAUTION:

Do not use ECM ground terminals when measuring input/output voltage. Doing so may result in damage to the ECM's transistor. Use a ground other than ECM terminals, such as the ground.

TERMINAL NO.	WIRE COLOR	ITEM	CONDITION	DATA (DC Voltage)
45	W	EVAP canister purge volume control solenoid valve	**[Engine is running]** ● Idle speed	BATTERY VOLTAGE (11 - 14V)★ 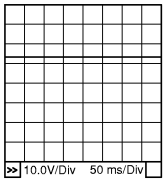 PBIB0050E
			[Engine is running] ● Engine speed: About 2,000 rpm (More than 100 seconds after starting engine)	11 - 14V★ 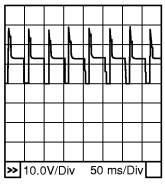 PBIB0051E
111	W/B	ECM relay (Self shut-off)	**[Engine is running]** **[Ignition switch: OFF]** ● For a few seconds after turning ignition switch OFF	0 - 1.5V
			[Ignition switch: OFF] ● More than a few seconds after turning ignition switch OFF	BATTERY VOLTAGE (11 - 14V)
119 120	R R	Power supply for ECM	**[Ignition switch: ON]**	BATTERY VOLTAGE (11 - 14V)

★: Average voltage for pulse signal (Actual pulse signal can be confirmed by oscilloscope.)

Diagnostic Procedure

ABS007TO

1. CHECK EVAP CANISTER PURGE VOLUME CONTROL SOLENOID VALVE POWER SUPPLY CIRCUIT

1. Turn ignition switch OFF.
2. Disconnect EVAP canister purge volume control solenoid valve harness connector.
3. Turn ignition switch ON.

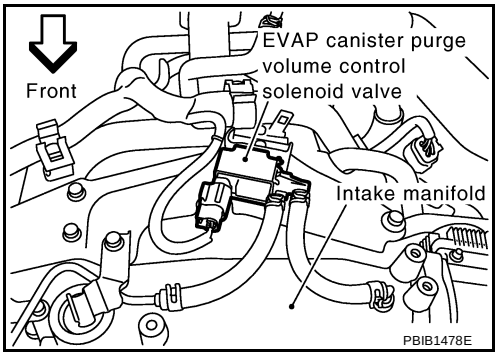

4. Check voltage between EVAP canister purge volume control solenoid valve terminal 1 and ground with CONSULT-II or tester.

Voltage: Battery voltage

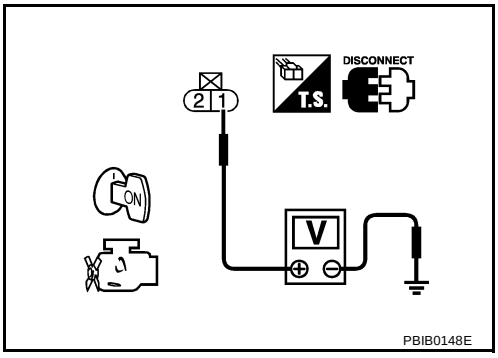

OK or NG

OK >> GO TO 3.
NG >> GO TO 2.

2. DETECT MALFUNCTIONING PART

Check the following.

- Harness connectors E211, M41
- Harness connectors M82, F102
- IPDM E/R harness connector E7
- Harness for open or short between EVAP canister purge volume control solenoid valve and IPDM E/R
- Harness for open or short between EVAP canister purge volume control solenoid valve and ECM

>> Repair open circuit or short to ground or short to power in harness or connectors.

3. CHECK EVAP CANISTER PURGE VOLUME CONTROL SOLENOID VALVE OUTPUT SIGNAL CIRCUIT FOR OPEN AND SHORT

1. Turn ignition switch OFF.
2. Disconnect ECM harness connector.
3. Check harness continuity between ECM terminal 45 and EVAP canister purge volume control solenoid valve terminal 2. Refer to Wiring Diagram.

Continuity should exist.

4. Also check harness for short to ground and short to power.

OK or NG

OK >> GO TO 4.
NG >> Repair open circuit or short to ground or short to power in harness or connectors.

4. CHECK EVAP CONTROL SYSTEM PRESSURE SENSOR CONNECTOR

1. Disconnect EVAP control system pressure sensor harness connector.
2. Check connectors for water.

Water should not exist.

OK or NG

OK >> GO TO 5.
NG >> Replace EVAP control system pressure sensor.

5. CHECK EVAP CONTROL SYSTEM PRESSURE SENSOR

Refer to EC-1091, "Component Inspection" .

OK or NG

OK (With CONSULT-II)>>GO TO 6.
OK (Without CONSULT-II)>>GO TO 7.
NG >> Replace EVAP control system pressure sensor.

6. CHECK EVAP CANISTER PURGE VOLUME CONTROL SOLENOID VALVE

With CONSULT-II

1. Turn ignition switch OFF.
2. Reconnect harness connectors disconnected.
3. Start engine.
4. Perform “PURG VOL CONT/V” in “ACTIVE TEST” mode with CONSULT-II. Check that engine speed varies according to the valve opening.

ACTIVE TEST	
PURG VOL CONT/V	0 %
MONITOR	
ENG SPEED	XXX rpm
HO2S1 MNTR (B1)	LEAN
HO2S1 MNTR (B2)	LEAN
A/F ALPHA-B1	XXX %
A/F ALPHA-B2	XXX %

PBIB0147E

OK or NG

OK >> GO TO 8.
NG >> GO TO 7.

7. CHECK EVAP CANISTER PURGE VOLUME CONTROL SOLENOID VALVE

Refer to EC-1240, "Component Inspection" .

OK or NG

OK >> GO TO 8.
NG >> Replace EVAP canister purge volume control solenoid valve.

8. CHECK RUBBER TUBE FOR CLOGGING

1. Disconnect rubber tube connected to EVAP canister vent control valve.
2. Check the rubber tube for clogging.

OK or NG

OK >> GO TO 9.
NG >> Clean the rubber tube using an air blower.

9. CHECK EVAP CANISTER VENT CONTROL VALVE

Refer to EC-1081, "Component Inspection" .

OK or NG

OK >> GO TO 10.
NG >> Replace EVAP canister vent control valve.

10. CHECK IF EVAP CANISTER SATURATED WITH WATER

1. Remove EVAP canister with EVAP canister vent control valve and EVAP control system pressure sensor attached.
2. Check if water will drain from the EVAP canister.

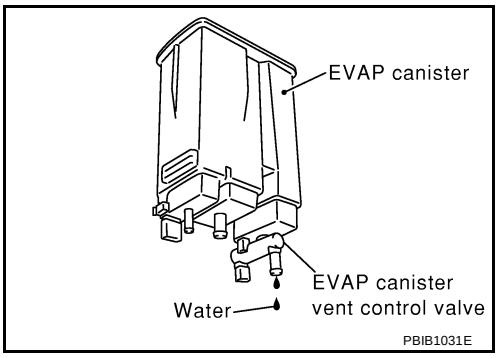

Yes or No

Yes >> GO TO 11.
No >> GO TO 13.

11. CHECK EVAP CANISTER

Weigh the EVAP canister with the EVAP canister vent control valve and EVAP control system pressure sensor attached.
The weight should be less than 2.1 kg (4.6 lb).

OK or NG

OK >> GO TO 13.
NG >> GO TO 12.

12. DETECT MALFUNCTIONING PART

Check the following.

- EVAP canister for damage
- EVAP hose between EVAP canister and vehicle frame for clogging or poor connection

>> Repair hose or replace EVAP canister.

13. CHECK INTERMITTENT INCIDENT

Refer to EC-854, "TROUBLE DIAGNOSIS FOR INTERMITTENT INCIDENT" .

>> **INSPECTION END**

Component Inspection

ABS007TP

EVAP CANISTER PURGE VOLUME CONTROL SOLENOID VALVE

With CONSULT-II

Check air passage continuity of EVAP canister purge volume control solenoid valve under the following conditions.

Condition (PURG VOL CONT/V value)	Air passage continuity between A and B
100%	Yes
0%	No

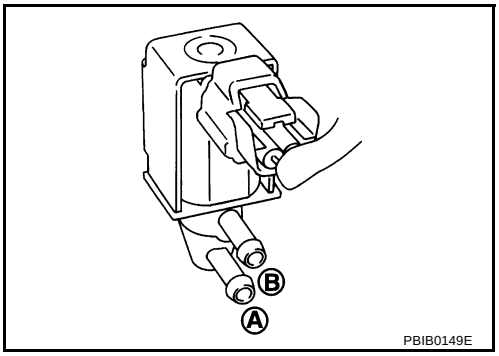

Without CONSULT-II

Check air passage continuity of EVAP canister purge volume control solenoid valve under the following conditions.

Condition	Air passage continuity between A and B
12V direct current supply between terminals 1 and 2	Yes
No supply	No

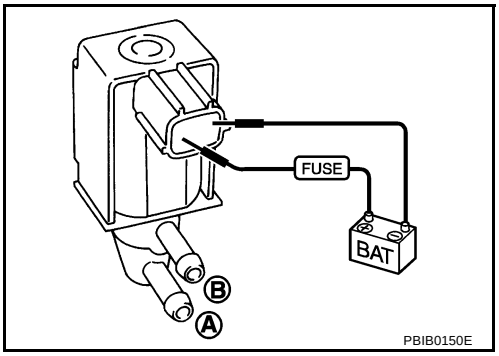

Removal and Installation

ABS007TQ

EVAP CANISTER PURGE VOLUME CONTROL SOLENOID VALVE

Refer toEM-178, "INTAKE MANIFOLD" .

DTC P1446 EVAP CANISTER VENT CONTROL VALVE

PFP:14935

Component Description

ABS007TR

The EVAP canister vent control valve is located on the EVAP canister and is used to seal the canister vent.
This solenoid valve responds to signals from the ECM. When the ECM sends an ON signal, the coil in the solenoid valve is energized. A plunger will then move to seal the canister vent. The ability to seal the vent is necessary for the on board diagnosis of other evaporative emission control system components.
This solenoid valve is used only for diagnosis, and usually remains opened.
When the vent is closed, under normal purge conditions, the evaporative emission control system is depressurized and allows EVAP Control System diagnosis.

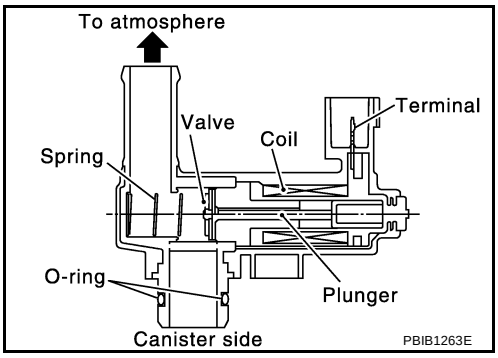

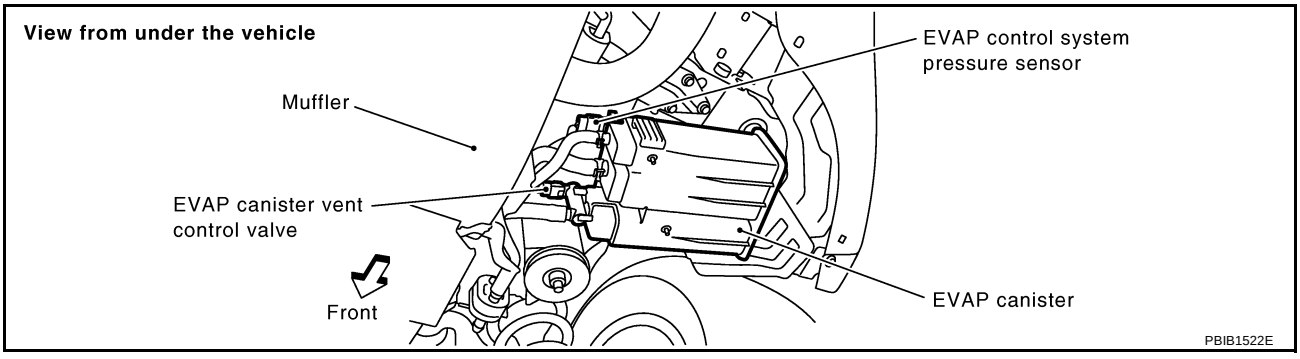

CONSULT-II Reference Value in Data Monitor Mode

ABS007TS

Specification data are reference values.

MONITOR ITEM	CONDITION	SPECIFICATION
VENT CONT/V	● Ignition switch: ON	OFF

On Board Diagnosis Logic

ABS007TT

DTC No.	Trouble diagnosis name	DTC detecting condition	Possible cause
P1446 1446	EVAP canister vent control valve close	EVAP canister vent control valve remains closed under specified driving conditions.	● EVAP canister vent control valve ● EVAP control system pressure sensor and the circuit ● Blocked rubber tube to EVAP canister vent control valve ● EVAP canister is saturated with water

DTC Confirmation Procedure

ABS007TU

NOTE:
If DTC Confirmation Procedure has been previously conducted, always turn ignition switch OFF and wait at least 10 seconds before conducting the next test.

WITH CONSULT-II

1. Turn ignition switch ON and wait at least 5 seconds.
2. Turn ignition switch OFF and wait at least 10 seconds.
3. Turn ignition switch ON and select “DATA MONITOR” mode with CONSULT-II.
4. Start engine and let it idle for at least 1 minute.
5. Repeat next procedures 3 times.

a. Increase the engine speed up to 3,000 to 3,500 rpm and keep it for 2 minutes and 50 seconds to 3 minutes.
Never exceed 3 minutes.

b. Fully released accelerator pedal and keep engine idle for about 5 seconds.

6. If 1st trip DTC is detected, go to EC-1244, "Diagnostic Procedure" .
If 1st trip DTC is not detected, go to the next step.
7. Repeat next procedure 20 times.

a. Quickly increase the engine speed up to 4,000 to 4,500 rpm or more and keep it for 25 to 30 seconds.

b. Fully released accelerator pedal and keep engine idle for at least 35 seconds.

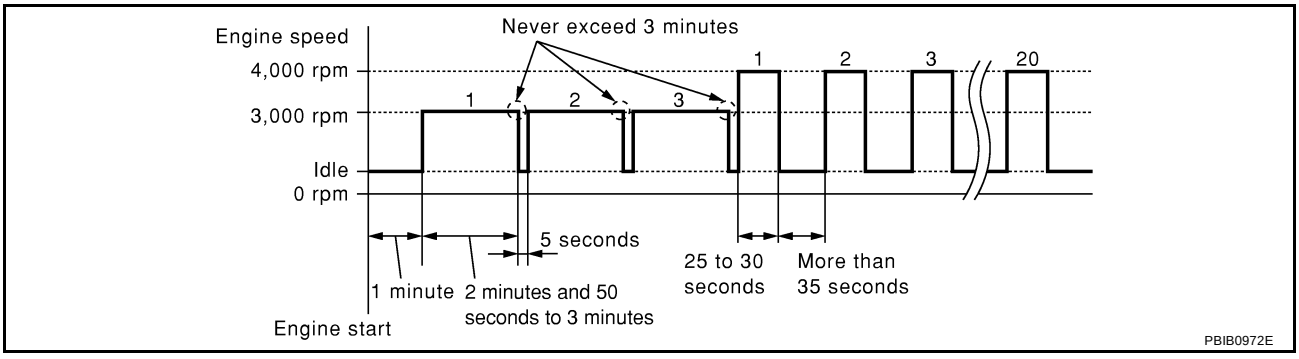

8. If 1st trip DTC is detected, go to EC-1244, "Diagnostic Procedure" .

WITH GST

Follow the procedure “WITH CONSULT-II” above.

DATA MONITOR	
MONITOR	NO DTC
ENG SPEED	XXX rpm

SEF058Y

Wiring Diagram

ABS007TV

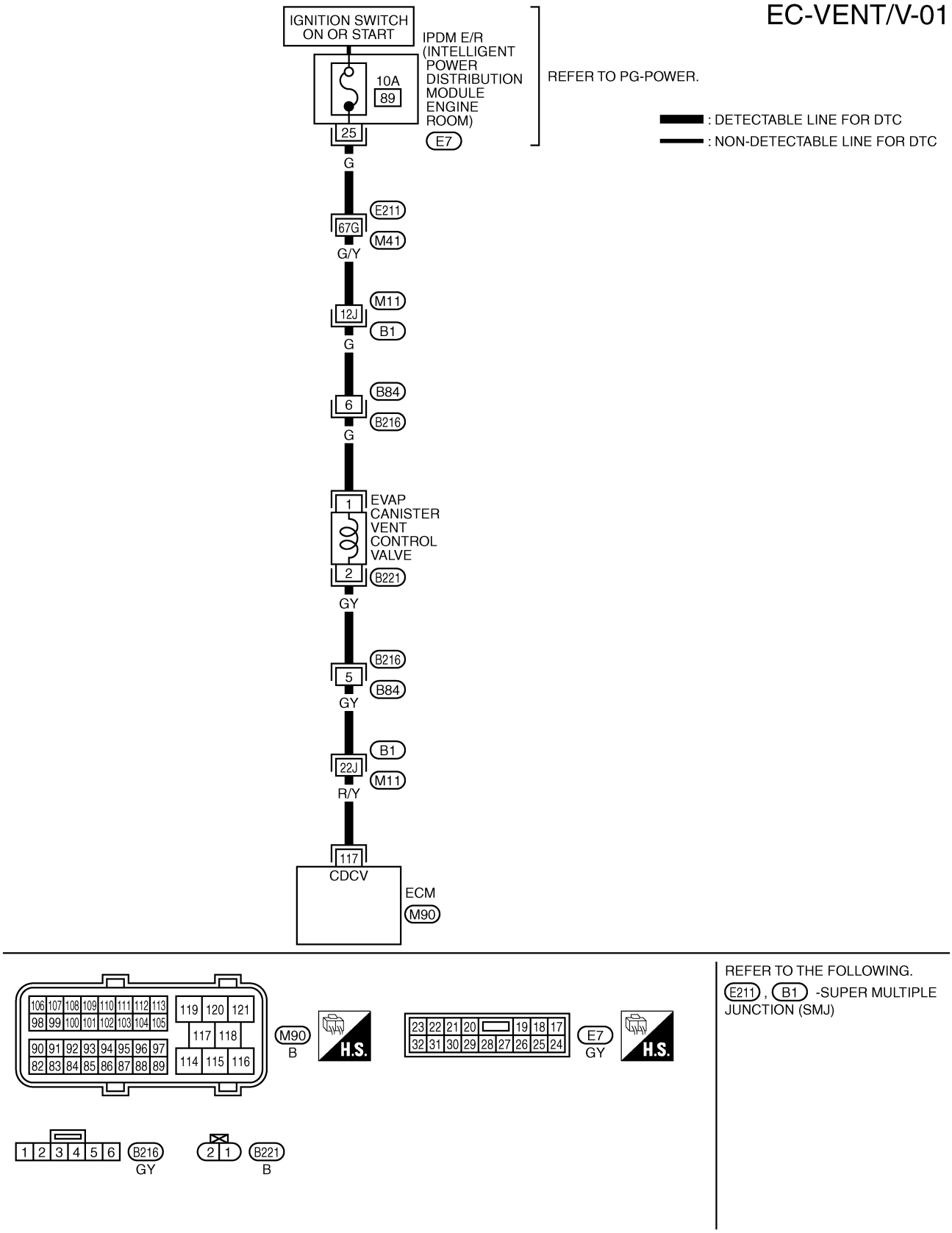

Specification data are reference values and are measured between each terminal and ground.

CAUTION:

Do not use ECM ground terminals when measuring input/output voltage. Doing so may result in damage to the ECM's transistor. Use a ground other than ECM terminals, such as the ground.

TERMINAL NO.	WIRE COLOR	ITEM	CONDITION	DATA (DC Voltage)
117	R/Y	EVAP canister vent control valve	**[Ignition switch: ON]**	BATTERY VOLTAGE (11 - 14V)

Diagnostic Procedure

ABS007TW

1. CHECK RUBBER TUBE

1. Turn ignition switch OFF.
2. Disconnect rubber tube connected to EVAP canister vent control valve.

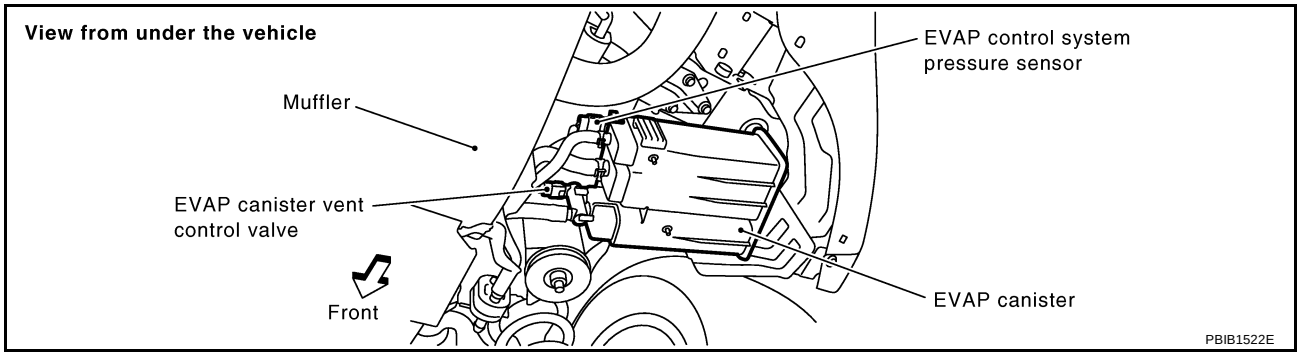

3. Check the rubber tube for clogging.

OK or NG

OK >> GO TO 2.
NG >> Clean rubber tube using an air blower.

2. CHECK EVAP CANISTER VENT CONTROL VALVE

Refer to EC-1245, "EVAP CANISTER VENT CONTROL VALVE" .

OK or NG

OK >> GO TO 3.
NG >> Replace EVAP canister vent control valve.

3. CHECK IF EVAP CANISTER SATURATED WITH WATER

1. Remove EVAP canister with EVAP canister vent control valve and EVAP control system pressure sensor attached.
2. Check if water will drain from the EVAP canister.

Yes or No

Yes >> GO TO 4.
No >> GO TO 6.

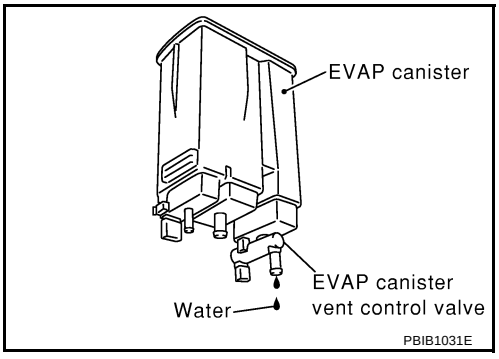

4. CHECK EVAP CANISTER

Weigh the EVAP canister with the EVAP canister vent control valve and EVAP control system pressure sensor attached.
The weight should be less than 2.1 kg (4.6 lb).

OK or NG

OK >> GO TO 6.
NG >> GO TO 5.

5. DETECT MALFUNCTIONING PART

Check the following.

- EVAP canister for damage
- EVAP hose between EVAP canister and vehicle frame for clogging or poor connection

>> Repair hose or replace EVAP canister.

6. CHECK EVAP CONTROL SYSTEM PRESSURE SENSOR CONNECTOR

1. Disconnect EVAP control system pressure sensor harness connector.
2. Check connectors for water.

Water should not exist.

OK or NG

OK >> GO TO 7.
NG >> Replace EVAP control system pressure sensor.

7. CHECK EVAP CONTROL SYSTEM PRESSURE SENSOR

Refer to EC-1091, "Component Inspection" .

OK or NG

OK >> GO TO 8.
NG >> Replace EVAP control system pressure sensor.

8. CHECK INTERMITTENT INCIDENT

Refer to EC-854, "TROUBLE DIAGNOSIS FOR INTERMITTENT INCIDENT" .

>> **INSPECTION END**

Component Inspection

ABS007TX

EVAP CANISTER VENT CONTROL VALVE

With CONSULT-II

1. Remove EVAP canister vent control valve from EVAP canister.
2. Check portion **B** of EVAP canister vent control valve for being rusted.
   If NG, replace EVAP canister vent control valve.
   If OK, go to next step.
3. Reconnect harness connectors disconnected.
4. Turn ignition switch ON.

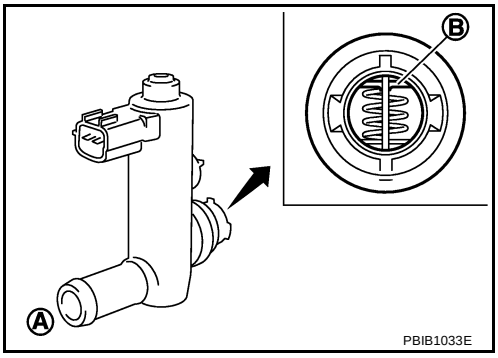

5. Perform “VENT CONTROL/V” in “ACTIVE TEST” mode.
6. Check air passage continuity and operation delay time.
   Make sure that new O-ring is installed properly.

Condition VENT CONTROL/V	Air passage continuity between A and B
ON	No
OFF	Yes

Operation takes less than 1 second.

If NG, replace EVAP canister vent control valve.
If OK, go to next step.

ACTIVE TEST	
VENT CONTROL/V	OFF
MONITOR	
ENG SPEED	XXX rpm
A/F ALPHA-B1	XXX %
A/F ALPHA-B2	XXX %
HO2S1 (B1)	XXX V
HO2S1 (B2)	XXX V

PBIB0151E

7. Clean the air passage (Portion **A** to **B**) of EVAP canister vent control valve using an air blower.
8. Perform step 6 again.

Without CONSULT-II

1. Remove EVAP canister vent control valve from EVAP canister.
2. Check portion **B** of EVAP canister vent control valve for being rusted.

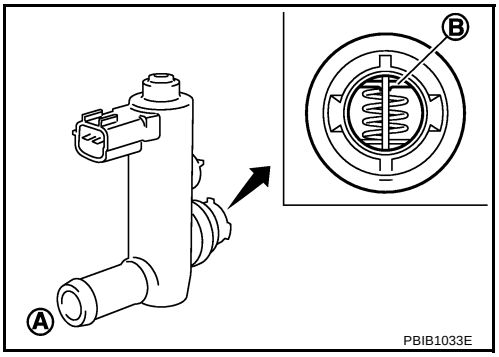

PBIB1033E

3. Check air passage continuity and operation delay time under the following conditions.
   Make sure that new O-ring is installed properly.

Condition	Air passage continuity between A and B
12V direct current supply between terminals 1 and 2	No
OFF	Yes

Operation takes less than 1 second.

If NG, replace EVAP canister vent control valve.
If OK, go to next step.

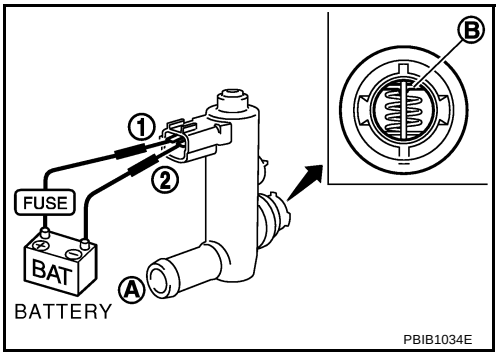

PBIB1034E

4. Clean the air passage (Portion **A** to **B**) of EVAP canister vent control valve using an air blower.
5. Perform step 3 again.

DTC P1564 ICC STEERING SWITCH

PFP:25551

Component Description

ABS007TY

ICC steering switch has variant values of electrical resistance for each button. ECM reads voltage variation of switch, and determines which button is operated.

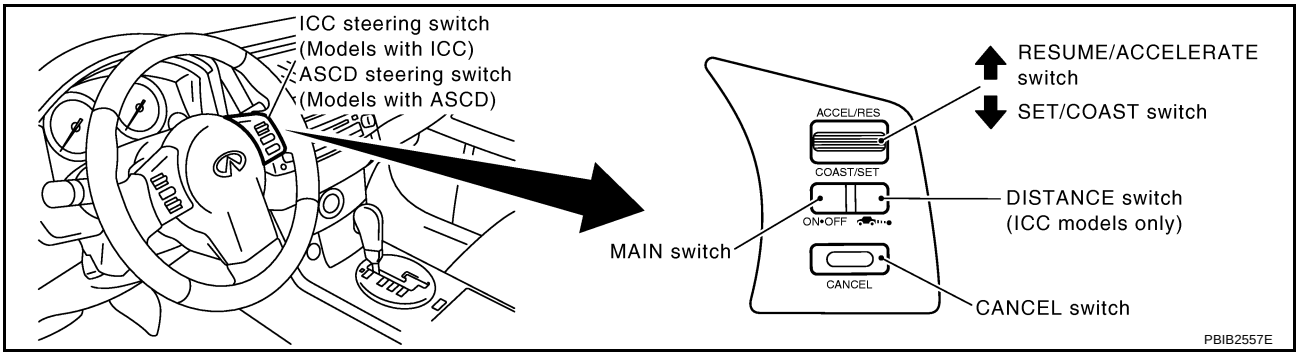

Refer to ACS-6, "DESCRIPTION" for the ICC function.

CONSULT-II Reference Value in Data Monitor Mode

ABS007TZ

Specification data are reference values.

MONITOR ITEM	CONDITION		SPECIFICATION
MAIN SW	● Ignition switch: ON	MAIN switch: Pressed	ON
		MAIN switch: Released	OFF
CANCEL SW	● Ignition switch: ON	CANCEL switch: Pressed	ON
		CANCEL switch: Released	OFF
RESUME/ACC SW	● Ignition switch: ON	RESUME/ACCELERATE switch: Pressed	ON
		RESUME/ACCELERATE switch: Released	OFF
SET SW	● Ignition switch: ON	SET/COAST switch: Pressed	ON
		SET/COAST switch: Released	OFF
DIST SW	● Ignition switch: ON	DISTANCE switch: Pressed	ON
		DISTANCE switch: Released	OFF

On Board Diagnosis Logic

ABS007YI

This self-diagnosis has the one trip detection logic.
The MIL will not light up for this diagnosis.

NOTE:
If DTC P1564 is displayed with DTC P0605, first perform the trouble diagnosis for DTC P0605. Refer to EC-1134 .

DTC No.	Trouble diagnosis name	DTC detecting condition	Possible cause
P1564 1564	ICC steering switch	● An excessively high voltage signal from the ICC steering switch is sent to ECM. ● ECM detects that input signal from the ICC steering switch is out of the specified range. ● ECM detects that the ICC steering switch is stuck ON.	● Harness or connectors (The switch circuit is open or shorted.) ● ICC steering switch ● ECM

DTC Confirmation Procedure

ABS007U1

NOTE:
If DTC Confirmation Procedure has been previously conducted, always turn ignition switch OFF and wait at least 10 seconds before conducting the next test.

WITH CONSULT-II

1. Turn ignition switch ON.
2. Select “DATA MONITOR” mode with CONSULT-II.
3. Wait at least 10 seconds.
4. Press MAIN switch for at least 10 seconds, then release it and wait at least 10 seconds.
5. Press CANCEL switch for at least 10 seconds, then release it and wait at least 10 seconds.
6. Press RESUME/ACCELERATE switch for at least 10 seconds, then release it and wait at least 10 seconds.
7. Press SET/COAST switch for at least 10 seconds, then release it and wait at least 10 seconds.
8. Press DISTANCE switch for at least 10 seconds, then release it and wait at least 10 seconds.
9. If DTC is detected, go to EC-1250, "Diagnostic Procedure" .

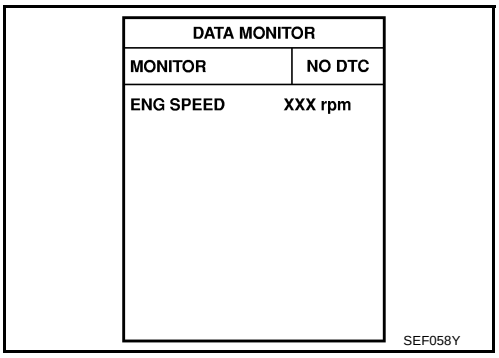

WITH GST

Follow the procedure “WITH CONSULT-II” above.

Wiring Diagram

ABS007U2

EC-ICC/SW-01

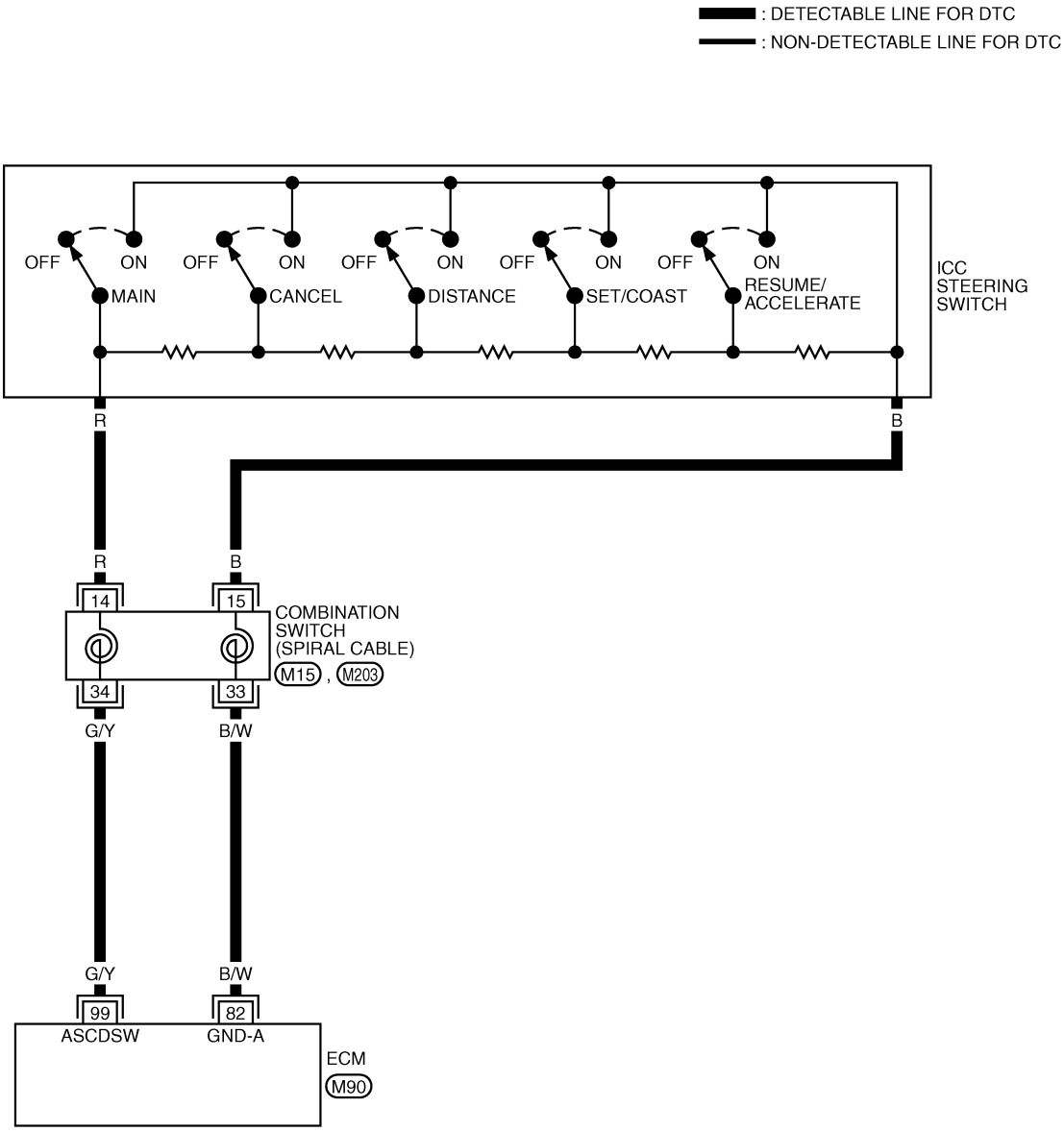

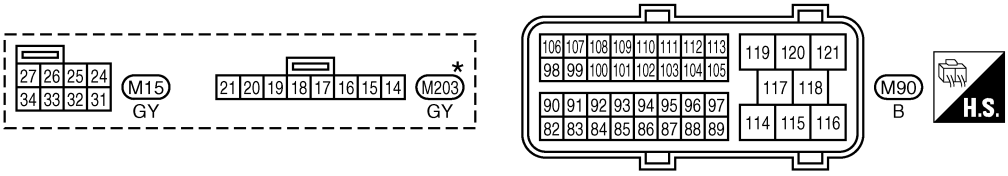

*: THIS CONNECTOR IS NOT SHOWN IN "HARNESS LAYOUT", PG SECTION.

TBWM0724E

Specification data are reference values and are measured between each terminal and ground.

CAUTION:

Do not use ECM ground terminals when measuring input/output voltage. Doing so may result in damage to the ECM's transistor. Use a ground other than ECM terminals, such as the ground.

TERMINAL NO.	WIRE COLOR	ITEM	CONDITION	DATA (DC Voltage)
82	B/W	Sensor ground	**[Engine is running]** ● **Warm-up condition** ● Idle speed	Approximately 0V
99	G/Y	ICC steering switch	**[Ignition switch: ON]** ● ICC steering switch: OFF	Approximately 4.3V
			[Ignition switch: ON] ● MAIN switch: Pressed	Approximately 0V
			[Ignition switch: ON] ● CANCEL switch: Pressed	Approximately 1.3V
			[Ignition switch: ON] ● RESUME/ACCELERATE switch: Pressed	Approximately 3.7V
			[Ignition switch: ON] ● SET/COAST switch: Pressed	Approximately 3V
			[Ignition switch: ON] ● DISTANCE switch: Pressed	Approximately 2.2V

Diagnostic Procedure

ABS007U3

1. CHECK GROUND CONNECTIONS

1. Turn ignition switch OFF.
2. Loosen and retighten three ground screws on the body.
   Refer to EC-861, "Ground Inspection" .

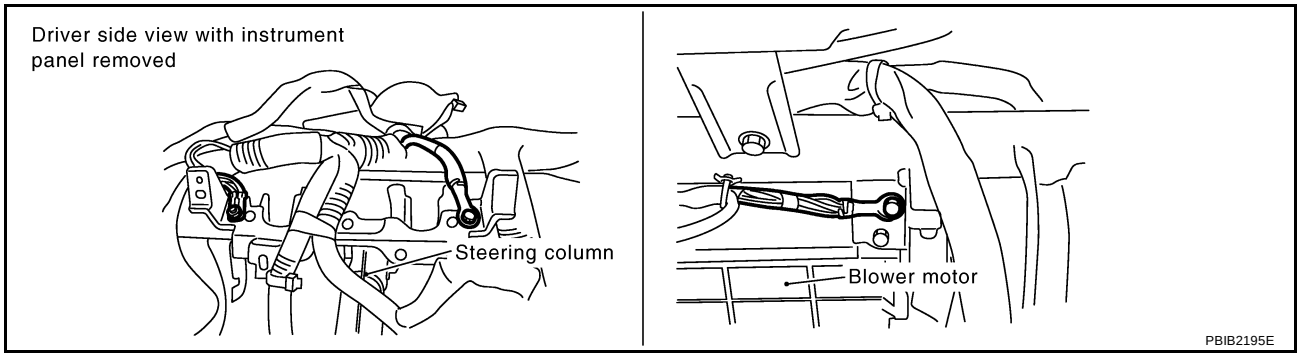

OK or NG

OK >> GO TO 2.
NG >> Repair or replace ground connections.

2. CHECK ICC STEERING SWITCH CIRCUIT

With CONSULT-II

1. Turn ignition switch ON.
2. Select “MAIN SW”, “CANCEL SW”, “RESUME/ACC SW”, “SET SW” and “DIST SW” in “DATA MONITOR” mode with CONSULT-II.
3. Check each item indication under the following conditions.

Switch	Monitor item	Condition	Indication
MAIN switch	MAIN SW	Pressed	ON
		Released	OFF
CANCEL switch	CANCEL SW	Pressed	ON
		Released	OFF
RESUME/ACCELERATE switch	RESUME/ACC SW	Pressed	ON
		Released	OFF
SET/COAST switch	SET SW	Pressed	ON
		Released	OFF
DISTANCE switch	DIST SW	Pressed	ON
		Released	OFF

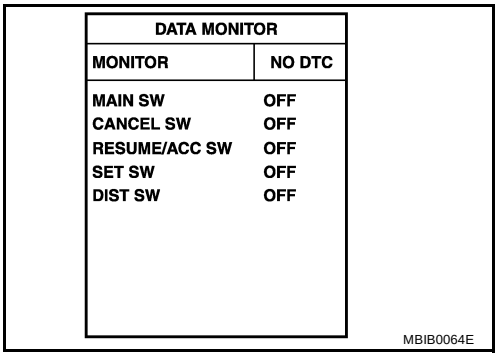

Without CONSULT-II

1. Turn ignition switch ON.
2. Check voltage between ECM terminal 99 and ground with pressing each button.

Switch	Condition	Voltage [V]
MAIN switch	Pressed	Approx. 0
	Released	Approx. 4.3
CANCEL switch	Pressed	Approx. 1.3
	Released	Approx. 4.3
RESUME/ACCELERATE switch	Pressed	Approx. 3.7
	Released	Approx. 4.3
SET/COAST switch	Pressed	Approx. 3.0
	Released	Approx. 4.3
DISTANCE switch	Pressed	Approx. 2.2
	Released	Approx. 4.3

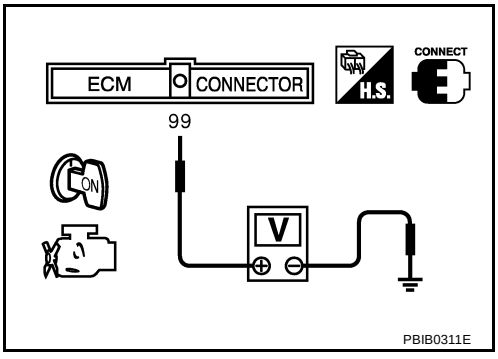

OK or NG

OK >> GO TO 8.
NG >> GO TO 3.

3. CHECK ICC STEERING SWITCH GROUND CIRCUIT FOR OPEN AND SHORT

1. Turn ignition switch OFF.
2. Disconnect ECM harness connector.
3. Disconnect combination switch harness connector M203.
4. Check harness continuity between combination switch terminal 15 and ECM terminal 82.
   Refer to Wiring Diagram.

   Continuity should exist.

5. Also check harness for short to ground and short to power.

OK or NG

OK >> GO TO 5.
NG >> GO TO 4.

4. DETECT MALFUNCTIONING PART

Check the following.

- Combination switch (spiral cable)
- Harness for open and short between ECM and combination switch

>> Repair open circuit or short to ground or short to power in harness or connectors.

5. CHECK ICC STEERING SWITCH INPUT SIGNAL CIRCUIT FOR OPEN AND SHORT

1. Check harness continuity between ECM terminal 99 and combination switch terminal 14.
   Refer to Wiring Diagram.

   Continuity should exist.

2. Also check harness for short to ground and short to power.

OK or NG

OK >> GO TO 7.
NG >> GO TO 6.

6. DETECT MALFUNCTIONING PART

Check the following.

- Combination switch (spiral cable)
- Harness for open and short between ECM and combination switch

>> Repair open circuit or short to ground or short to power in harness or connectors.

7. CHECK ICC STEERING SWITCH

Refer to EC-1253, "Component Inspection" .

OK or NG

OK >> GO TO 8.
NG >> Replace ICC steering switch.

8. CHECK INTERMITTENT INCIDENT

Refer to EC-854, "TROUBLE DIAGNOSIS FOR INTERMITTENT INCIDENT" .

>> **INSPECTION END**

Component Inspection

ABS007U4

ICC STEERING SWITCH

1. Disconnect combination switch (spiral cable).
2. Check continuity between combination switch terminals 14 and 15 with pushing each switch.

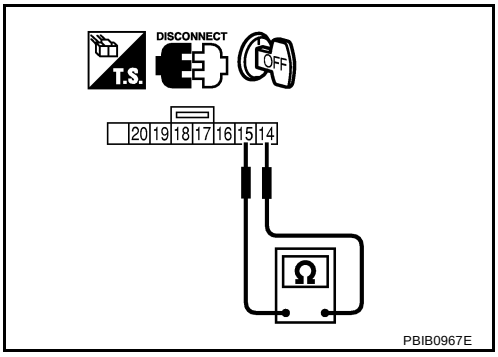

Switch	Condition	Resistance [Ω]
MAIN switch	Pressed	Approx. 0
	Released	Approx. 5,500
CANCEL switch	Pressed	Approx. 310
	Released	Approx. 5,500
RESUME/ACCELERATE switch	Pressed	Approx. 2,600
	Released	Approx. 5,500
SET/COAST switch	Pressed	Approx. 1,400
	Released	Approx. 5,500
DISTANCE switch	Pressed	Approx. 740
	Released	Approx. 5,500

If NG, replace ICC steering switch.

DTC P1564 ASCD STEERING SWITCH

PFP:25551

Component Description

ABS007U5

ASCD steering switch has variant values of electrical resistance for each button. ECM reads voltage variation of switch, and determines which button is operated.

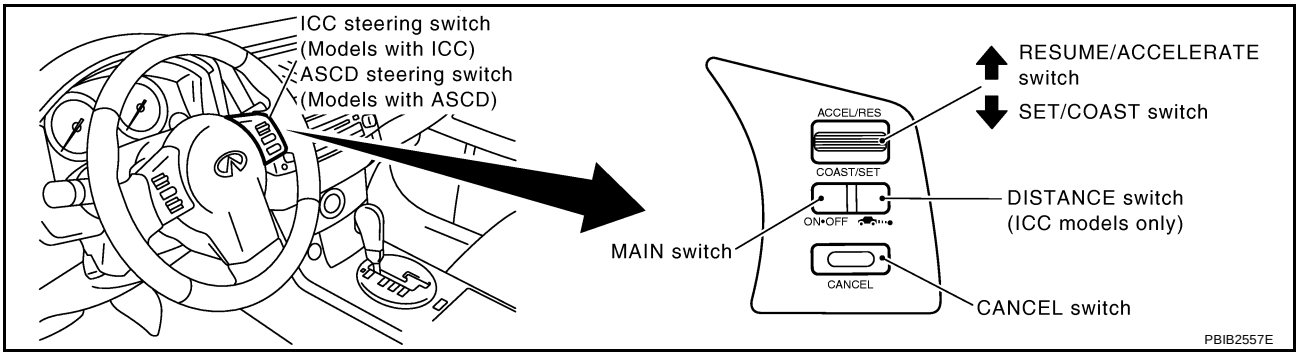

Refer to EC-727, "AUTOMATIC SPEED CONTROL DEVICE (ASCD)" for the ASCD function.

CONSULT-II Reference Value in Data Monitor Mode

ABS007U6

Specification data are reference values.

MONITOR ITEM	CONDITION		SPECIFICATION
MAIN SW	● Ignition switch: ON	MAIN switch: Pressed	ON
		MAIN switch: Released	OFF
CANCEL SW	● Ignition switch: ON	CANCEL switch: Pressed	ON
		CANCEL switch: Released	OFF
RESUME/ACC SW	● Ignition switch: ON	RESUME/ACCELERATE switch: Pressed	ON
		RESUME/ACCELERATE switch: Released	OFF
SET SW	● Ignition switch: ON	SET/COAST switch: Pressed	ON
		SET/COAST switch: Released	OFF

On Board Diagnosis Logic

ABS007U7

This self-diagnosis has the one trip detection logic.
The MIL will not light up for this diagnosis.

NOTE:
If DTC P1564 is displayed with DTC P0605, first perform the trouble diagnosis for DTC P0605. Refer to EC-1134 .

DTC No.	Trouble diagnosis name	DTC detecting condition	Possible cause
P1564 1564	ASCD steering switch	● An excessively high voltage signal from the ASCD steering switch is sent to ECM. ● ECM detects that input signal from the ASCD steering switch is out of the specified range. ● ECM detects that the ASCD steering switch is stuck ON.	● Harness or connectors (The switch circuit is open or shorted.) ● ASCD steering switch ● ECM

DTC Confirmation Procedure

ABS007U8

NOTE:
If DTC Confirmation Procedure has been previously conducted, always turn ignition switch OFF and wait at least 10 seconds before conducting the next test.

WITH CONSULT-II

1. Turn ignition switch ON.
2. Select “DATA MONITOR” mode with CONSULT-II.
3. Wait at least 10 seconds.
4. Press MAIN switch for at least 10 seconds, then release it and wait at least 10 seconds.
5. Press CANCEL switch for at least 10 seconds, then release it and wait at least 10 seconds.
6. Press RESUME/ACCELERATE switch for at least 10 seconds, then release it and wait at least 10 seconds.
7. Press SET/COAST switch for at least 10 seconds, then release it and wait at least 10 seconds.
8. If DTC is detected, go to EC-1257, "Diagnostic Procedure" .

WITH GST

Follow the procedure “WITH CONSULT-II” above.

Wiring Diagram

ABS007U9

EC-ASC/SW-01

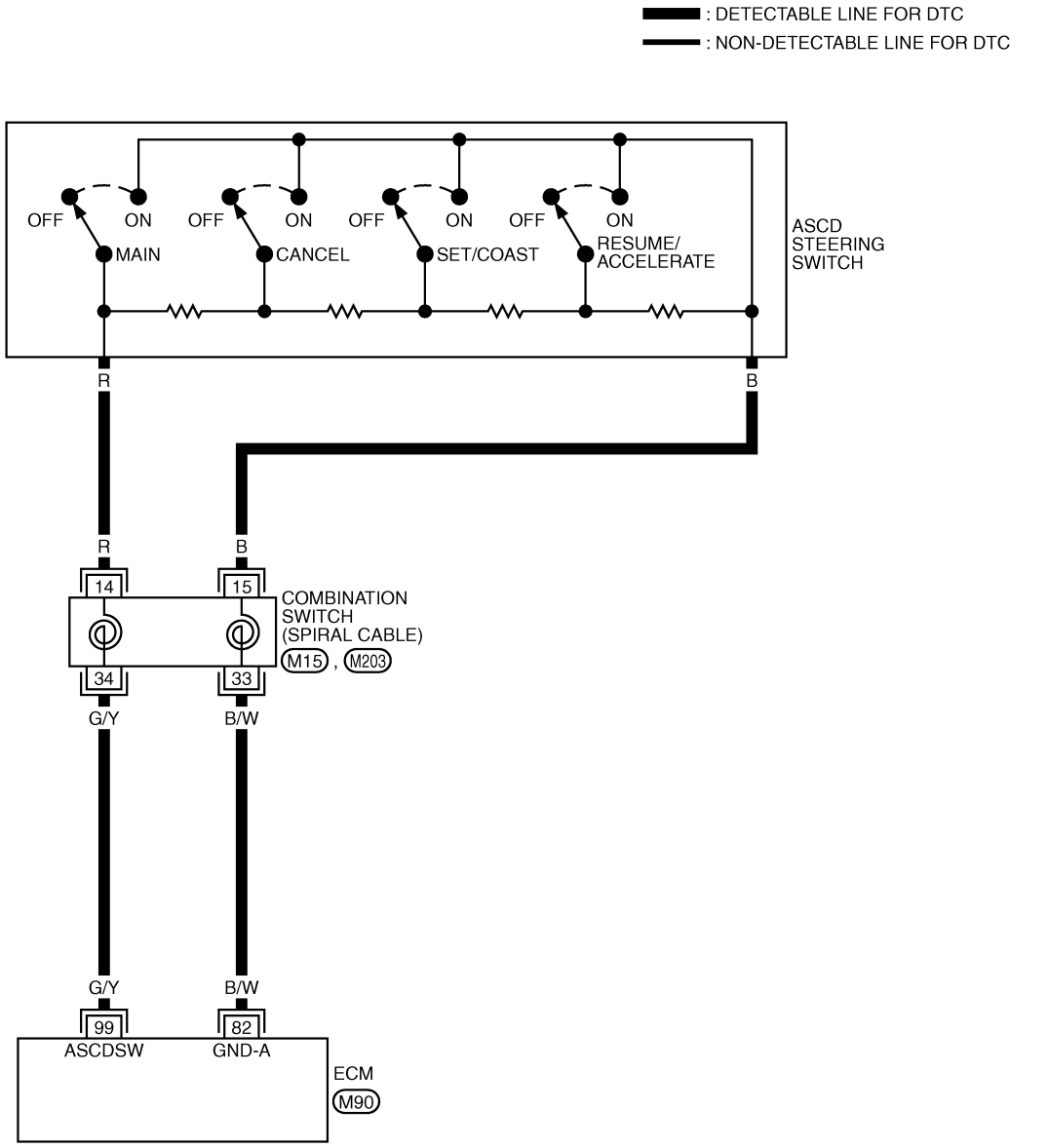

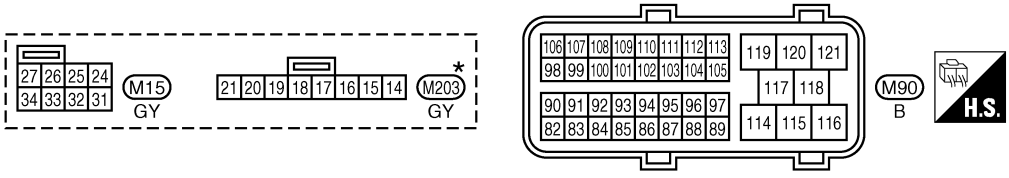

*: THIS CONNECTOR IS NOT SHOWN IN "HARNESS LAYOUT", PG SECTION.

TBWM0725E

Specification data are reference values and are measured between each terminal and ground.

CAUTION:
Do not use ECM ground terminals when measuring input/output voltage. Doing so may result in damage to the ECM's transistor. Use a ground other than ECM terminals, such as the ground.

TERMINAL NO.	WIRE COLOR	ITEM	CONDITION	DATA (DC Voltage)
82	B/W	Sensor ground	**[Engine is running]** ● **Warm-up condition** ● Idle speed	Approximately 0V
99	G/Y	ASCD steering switch	**[Ignition switch: ON]** ● ASCD steering switch: OFF	Approximately 4V
			[Ignition switch: ON] ● MAIN switch: Pressed	Approximately 0V
			[Ignition switch: ON] ● CANCEL switch: Pressed	Approximately 1V
			[Ignition switch: ON] ● RESUME/ACCELERATE switch: Pressed	Approximately 3V
			[Ignition switch: ON] ● SET/COAST switch: Pressed	Approximately 2V

Diagnostic Procedure

ABS007UA

1. CHECK GROUND CONNECTIONS

1. Turn ignition switch OFF.
2. Loosen and retighten three ground screws on the body.
   Refer to EC-861, "Ground Inspection" .

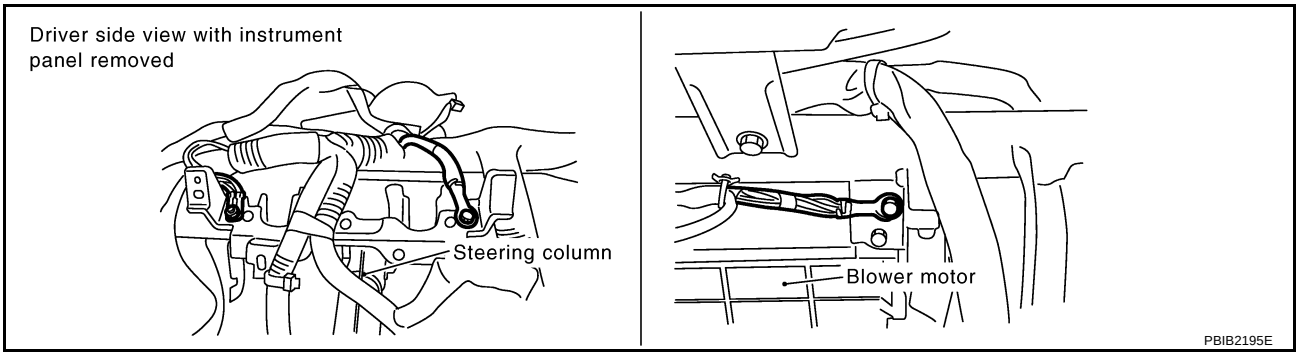

OK or NG

OK >> GO TO 2.
NG >> Repair or replace ground connections.

2. CHECK ASCD STEERING SWITCH CIRCUIT

With CONSULT-II

1. Turn ignition switch ON.
2. Select “MAIN SW”, “CANCEL SW”, “RESUME/ACC SW” and “SET SW” in “DATA MONITOR” mode with CONSULT-II.
3. Check each item indication under the following conditions.

Switch	Monitor item	Condition	Indication
MAIN switch	MAIN SW	Pressed	ON
		Released	OFF
CANCEL switch	CANCEL SW	Pressed	ON
		Released	OFF
RESUME/ACCEL-ERATE switch	RESUME/ACC SW	Pressed	ON
		Released	OFF
SET/COAST switch	SET SW	Pressed	ON
		Released	OFF

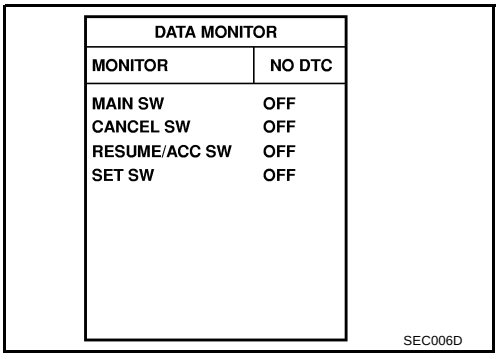

Without CONSULT-II

1. Turn ignition switch ON.
2. Check voltage between ECM terminal 99 and ground with pressing each button.

Switch	Condition	Voltage [V]
MAIN switch	Pressed	Approx. 0
	Released	Approx. 4
CANCEL switch	Pressed	Approx. 1
	Released	Approx. 4
RESUME/ACCELERATE switch	Pressed	Approx. 3
	Released	Approx. 4
SET/COAST switch	Pressed	Approx. 2
	Released	Approx. 4

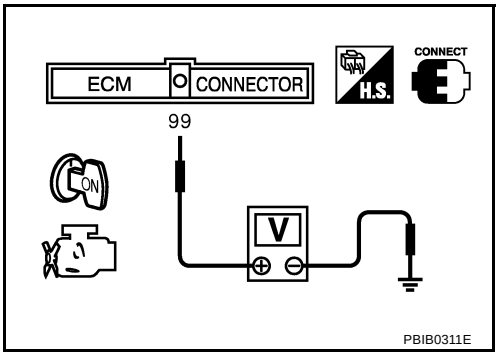

OK or NG

OK >> GO TO 8.
NG >> GO TO 3.

3. CHECK ASCD STEERING SWITCH GROUND CIRCUIT FOR OPEN AND SHORT

1. Turn ignition switch OFF.
2. Disconnect ECM harness connector M203.
3. Disconnect combination switch harness connector.
4. Check harness continuity between combination switch terminal 15 and ECM terminal 82. Refer to Wiring Diagram.

   Continuity should exist.

5. Also check harness for short to ground and short to power.

OK or NG

OK >> GO TO 5.
NG >> GO TO 4.

4. DETECT MALFUNCTIONING PART

Check the following.

- Combination switch (spiral cable)
- Harness for open and short between ECM and combination switch

>> Repair open circuit or short to ground or short to power in harness or connectors.

5. CHECK ASCD STEERING SWITCH INPUT SIGNAL CIRCUIT FOR OPEN AND SHORT

1. Check harness continuity between ECM terminal 99 and combination switch terminal 14.
   Refer to Wiring Diagram.

   Continuity should exist.

2. Also check harness for short to ground and short to power.

OK or NG

OK >> GO TO 7.
NG >> GO TO 6.

6. DETECT MALFUNCTIONING PART

Check the following.

- Combination switch (spiral cable)
- Harness for open and short between ECM and combination switch

>> Repair open circuit or short to ground or short to power in harness or connectors.

7. CHECK ASCD STEERING SWITCH

Refer to EC-1260, "Component Inspection" .

OK or NG

OK >> GO TO 8.
NG >> Replace ASCD steering switch.

8. CHECK INTERMITTENT INCIDENT

Refer to EC-854, "TROUBLE DIAGNOSIS FOR INTERMITTENT INCIDENT" .

>> **INSPECTION END**

Component Inspection

ABS007UB

ASCD STEERING SWITCH

1. Disconnect combination switch (spiral cable).
2. Check continuity between combination switch terminals 14 and 15 with pushing each switch.

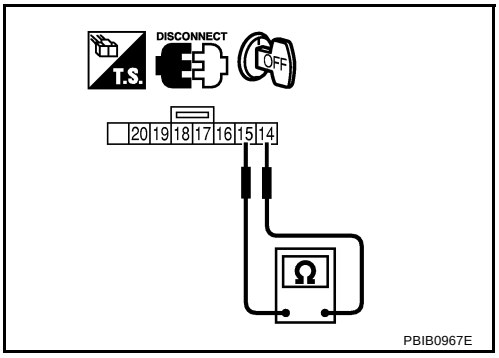

Switch	Condition	Resistance [Ω]
MAIN switch	Pressed	Approx. 0
	Released	Approx. 4,000
CANCEL switch	Pressed	Approx. 250
	Released	Approx. 4,000
RESUME/ACCELERATE switch	Pressed	Approx. 1,480
	Released	Approx. 4,000
SET/COAST switch	Pressed	Approx. 660
	Released	Approx. 4,000

DTC P1568 ICC FUNCTION

PFP:18995

On Board Diagnosis Logic

ABS007UC

This self-diagnosis has the one trip detection logic.
The MIL will not light up for this diagnosis.

NOTE:

- **If DTC P1568 is displayed with DTC U1000 or U1001, first perform the trouble diagnosis for DTC U1000, U1001. Refer to EC-862, "DTC U1000, U1001 CAN COMMUNICATION LINE" .**
- **If DTC P1568 is displayed with DTC P0605, first perform the trouble diagnosis for DTC P0605. Refer to EC-1134, "DTC P0605 ECM"**

DTC No.	Trouble Diagnosis Name	DTC Detecting Condition	Possible Cause
P1568 1568	ICC function	ECM detects a difference between signals from ICC unit is out of specified range.	● Harness or connectors (The CAN communication line is open or shorted.) ● ICC unit ● ECM

DTC Confirmation Procedure

ABS007UD

CAUTION:
Always drive vehicle at a safe speed.

NOTE:
If DTC Confirmation Procedure has been previously conducted, always turn ignition switch OFF and wait at least 10 seconds before conducting the next test.

TESTING CONDITION:
Step 4 may be conducted with the drive wheels lifted in the shop or by driving the vehicle. If a road test is expected to be easier, it is unnecessary to lift the vehicle.

WITH CONSULT-II

1. Turn ignition switch ON.
2. Select “DATA MONITOR” mode with CONSULT-II.
3. Press MAIN switch on ICC steering switch.
4. Drive the vehicle at more than 40 km/h (25 MPH).
5. Press SET/COAST switch.
6. If DTC is detected, go to EC-1261, "Diagnostic Procedure" .

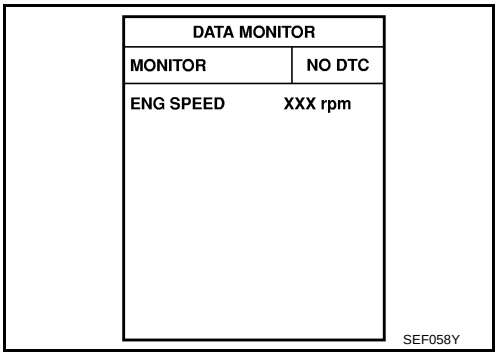

WITH GST

Follow the procedure “WITH CONSULT-II” above.

Diagnostic Procedure

ABS007UE

1. REPLACE ICC UNIT

1. Replace ICC unit.
2. Perform ACS-9, "ACTION TEST" .
3. Check DTC of ICC unit. Refer to ACS-41, "TROUBLE DIAGNOSIS FOR SELF-DIAGNOSTIC ITEMS" .

>> **INSPECTION END**

DTC P1572 ICC BRAKE SWITCH

PFP:25320

Component Description

ABS00DCB

When the brake pedal is depressed, ICC brake switch is turned OFF and stop lamp switch is turned ON. ECM detects the state of the brake pedal by this input of two kinds (ON/OFF signal).
Refer to ACS-6, "DESCRIPTION" for the ICC function.

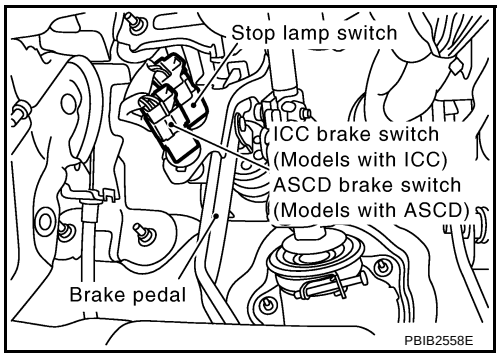

CONSULT-II Reference Value in Data Monitor Mode

ABS00DCC

Specification data are reference values.

MONITOR ITEM	CONDITION		SPECIFICATION
BRAKE SW1 (ICC brake switch)	● Ignition switch: ON	Brake pedal: Fully released	ON
		Brake pedal: Slightly depressed	OFF
BRAKE SW2 (stop lamp switch)	● Ignition switch: ON	Brake pedal: Fully released	OFF
		Brake pedal: Slightly depressed	ON

On Board Diagnosis Logic

ABS00E5F

This diagnosis has the one trip detection logic.
The MIL will not light up for this diagnosis.

NOTE:

- **If DTC P1572 is displayed with DTC P0605, first perform the trouble diagnosis for DTC P0605. Refer to EC-1134, "DTC P0605 ECM" .**
- **This self-diagnosis has the one trip detection logic. When malfunction A is detected, DTC is not stored in ECM memory. And in that case, 1st trip DTC and 1st trip freeze frame data are displayed. 1st trip DTC is erased when ignition switch OFF. And even when malfunction A is detected in two consecutive trips, DTC is not stored in ECM memory.**

DTC No.	Trouble diagnosis name	DTC detecting condition		Possible cause
P1572 1572	ICC brake switch	A)	● When the vehicle speed is above 30 km/h (19 MPH), ON signals from the stop lamp switch and the ICC brake switch are sent to ECM at the same time.	● Harness or connectors (The stop lamp switch circuit is shorted.) ● Harness or connectors (The ICC brake switch circuit is shorted.) ● Stop lamp switch ● ICC brake switch ● ICC brake hold relay ● Incorrect stop lamp switch installation ● Incorrect ICC brake switch installation ● ECM
		B)	● ICC brake switch signal is not sent to ECM for extremely long time while the vehicle is driving	

DTC Confirmation Procedure

ABS00E5G

CAUTION:
Always drive vehicle at a safe speed.

NOTE:
- If DTC Confirmation Procedure has been previously conducted, always turn ignition switch OFF and wait at least 10 seconds before conducting the next test.
- Procedure for malfunction B is not described here. It takes extremely long time to complete procedure for malfunction B. By performing procedure for malfunction A, the incident that causes malfunction B can be detected.

TESTING CONDITION:
Steps 4 and 5 may be conducted with the drive wheels lifted in the shop or by driving the vehicle. If a road test is expected to be easier, it is unnecessary to lift the vehicle.

WITH CONSULT-II

1. Start engine (VDC switch OFF).
2. Select “DATA MONITOR” mode with CONSULT-II.
3. Press MAIN switch and make sure that CRUISE lamp lights up.
4. Drive the vehicle for at least 5 consecutive seconds under the following conditions.

VHCL SPEED SE	More than 30 km/h (19 MPH)
Selector lever	Suitable position

If 1st trip DTC is detected, go to EC-1265, "Diagnostic Procedure" .
If 1st trip DTC is not detected, go to the following step.

DATA MONITOR	
MONITOR	NO DTC
ENG SPEED	XXX rpm
VHCL SPEED SE	XXX km/h
CRUISE LAMP	ON
BRAKE SW 1	ON
BRAKE SW 2	OFF

PBIB2386E

5. Drive the vehicle for at least 5 consecutive seconds under the following conditions.

VHCL SPEED SE	More than 30 km/h (19 MPH)
Selector lever	Suitable position
Driving location	Depress the brake pedal for more than five seconds so as not to come off from the above-mentioned vehicle speed.

6. If 1st trip DTC is detected, go to EC-1265, "Diagnostic Procedure" .

WITH GST

Follow the procedure “WITH CONSULT-II” above.

Wiring Diagram

ABS00DCF

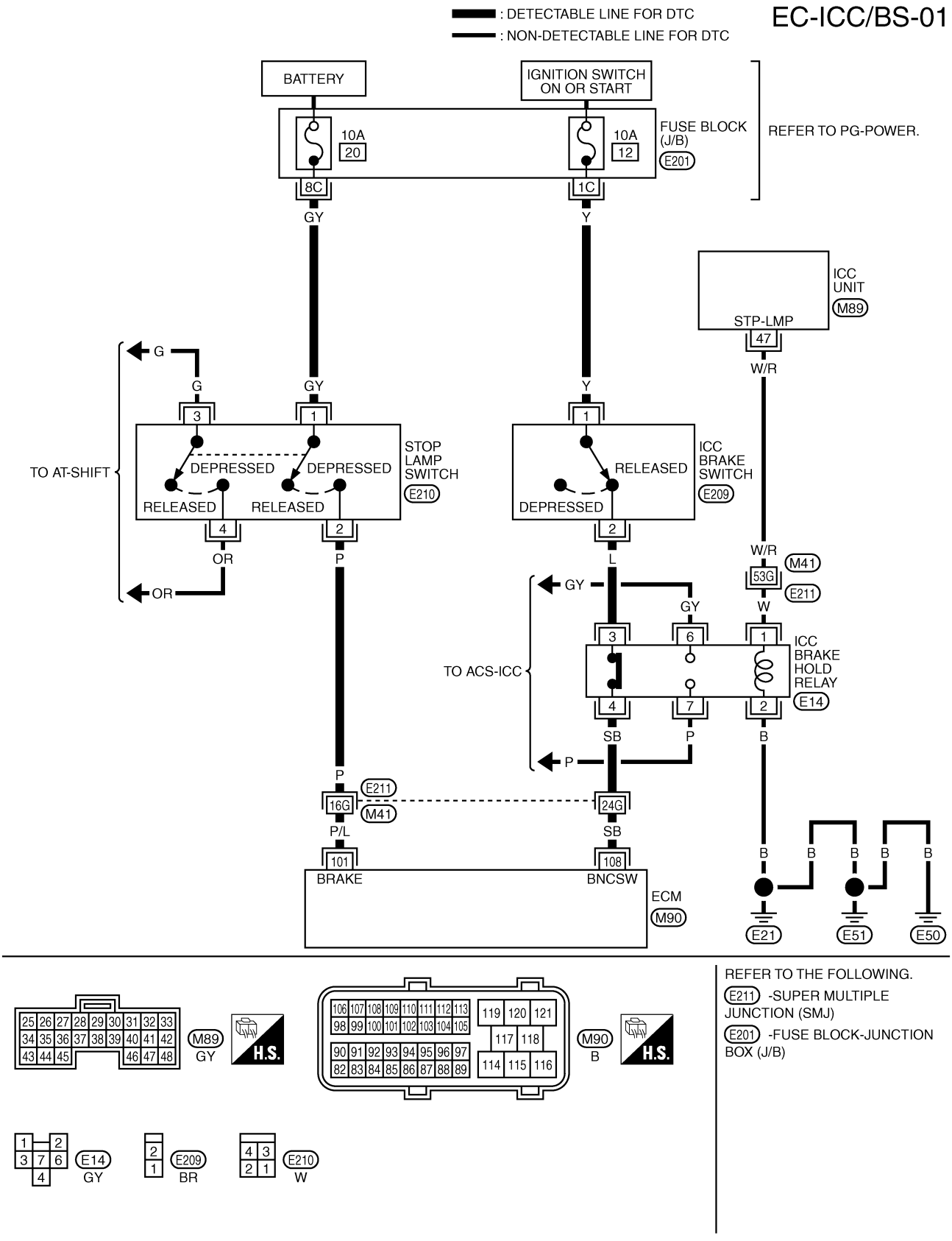

Specification data are reference values and are measured between each terminal and ground.

CAUTION:
Do not use ECM ground terminals when measuring input/output voltage. Doing so may result in damage to the ECM's transistor. Use a ground other than ECM terminals, such as the ground.

TERMINAL NO.	WIRE COLOR	ITEM	CONDITION	DATA (DC Voltage)
101	P/L	Stop lamp switch	**[Ignition switch: OFF]** ● Brake pedal: Fully released	Approximately 0V
			[Ignition switch: OFF] ● Brake pedal: Slightly depressed	BATTERY VOLTAGE (11 - 14V)
108	SB	ICC brake switch	**[Ignition switch: ON]** ● Brake pedal: Slightly depressed	Approximately 0V
			[Ignition switch: ON] ● Brake pedal: Fully released	BATTERY VOLTAGE (11 - 14V)

Diagnostic Procedure

ABS00DCG

1. CHECK OVERALL FUNCTION-I

With CONSULT-II

1. Turn ignition switch ON.
2. Select “BRAKE SW1” in “DATA MONITOR” mode with CONSULT-II.
3. Check “BRAKE SW1” indication under the following conditions.

CONDITION	INDICATION
When brake pedal: Slightly depressed	OFF
When brake pedal: Fully released	ON

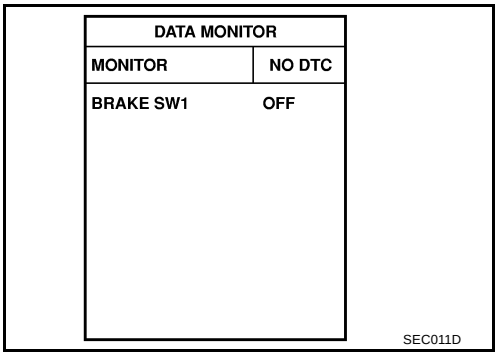

Without CONSULT-II

1. Turn ignition switch ON.
2. Check voltage between ECM terminal 108 and ground under the following conditions.

CONDITION	VOLTAGE
When brake pedal: Slightly depressed	Approximately 0V
When brake pedal: Fully released	Battery voltage

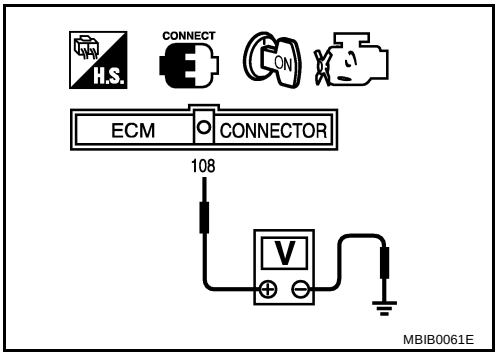

OK or NG

OK >> GO TO 2.
NG >> GO TO 3.

2. CHECK OVERALL FUNCTION-II

With CONSULT-II

Check “BRAKE SW2” indication in “DATA MONITOR” mode.

CONDITION	INDICATION
When brake pedal: Fully released	OFF
When brake pedal: Slightly depressed	ON

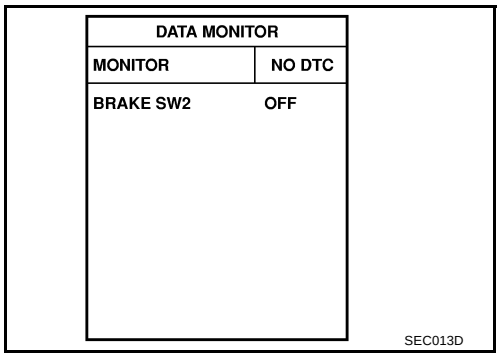

Without CONSULT-II

Check voltage between ECM terminal 101 and ground under the following conditions.

CONDITION	VOLTAGE
When brake pedal: Fully released	Approximately 0V
When brake pedal: Slightly depressed	Battery voltage

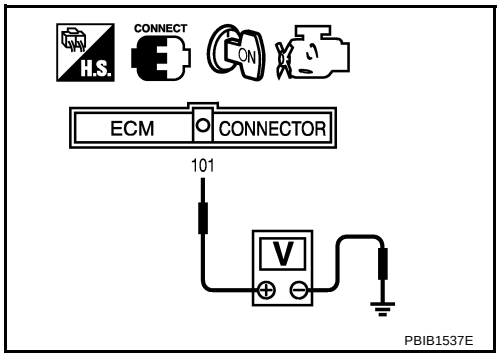

OK or NG

OK >> GO TO 17.
NG >> GO TO 12.

3. CHECK DTC WITH ICC UNIT

Refer to ACS-41, "TROUBLE DIAGNOSIS FOR SELF-DIAGNOSTIC ITEMS" .

OK or NG

OK >> GO TO 4.
NG >> Repair or replace.

4. CHECK ICC BRAKE SWITCH CIRCUIT

1. Turn ignition switch OFF.
2. Disconnect ICC brake hold relay.
3. Turn ignition switch ON.

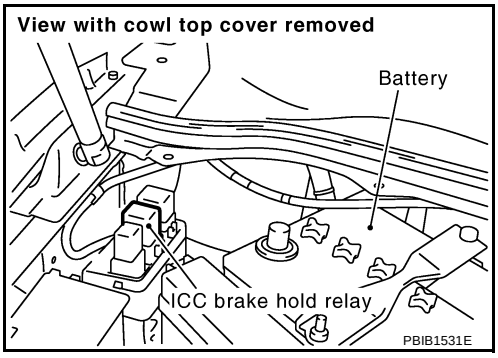

4. Check voltage between ICC brake hold relay terminal 3 and ground with CONSULT-II or tester.

Voltage: Battery voltage

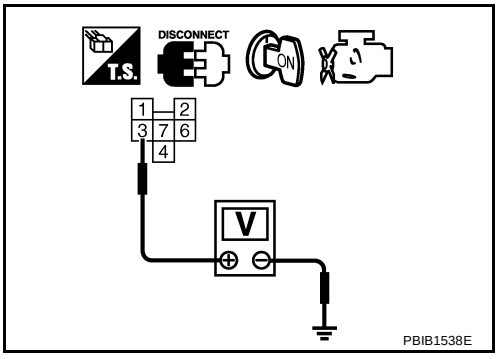

OK or NG

OK >> GO TO 9.
NG >> GO TO 5.

5. CHECK ICC BRAKE SWITCH POWER SUPPLY CIRCUIT

1. Turn ignition switch OFF.
2. Disconnect ICC brake switch harness connector.
3. Turn ignition switch ON.

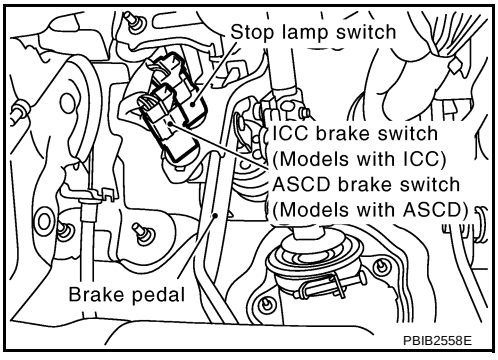

4. Check voltage between ICC brake switch terminal 1 and ground with CONSULT-II or tester.

Voltage: Battery voltage

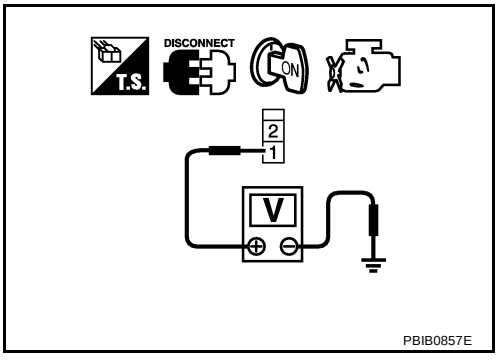

OK or NG

OK >> GO TO 7.
NG >> GO TO 6.

6. DETECT MALFUNCTIONING PART

Check the following.

- Fuse block (J/B) connector E201
- 10A fuse
- Harness for open or short between ICC brake switch and fuse

>> Repair open circuit or short to ground or short to power in harness or connectors.

7. CHECK ICC BRAKE SWITCH INPUT SIGNAL CIRCUIT FOR OPEN AND SHORT-I

1. Turn ignition switch OFF.
2. Check harness continuity between ICC brake hold relay terminal 3 and ICC brake switch terminal 2. Refer to Wiring Diagram.

Continuity should exist.

3. Also check harness for short to ground and short to power.

OK or NG

OK >> GO TO 8.
NG >> Repair open circuit or short to ground or short to power in harness or connectors.

8. CHECK ICC BRAKE SWITCH

Refer to EC-1270, "Component Inspection" .

OK or NG

OK >> GO TO 17.
NG >> Replace ICC brake switch.

9. CHECK ICC BRAKE SWITCH INPUT SIGNAL CIRCUIT FOR OPEN AND SHORT-II

1. Turn ignition switch OFF.
2. Disconnect ECM harness connector.
3. Check harness continuity between ICC brake hold relay terminal 4 and ECM terminal 108. Refer Wiring Diagram.

Continuity should exist.

4. Also check harness for short to ground and short to power.

OK or NG

OK >> GO TO 11.
NG >> GO TO 10.

10. DETECT MALFUNCTIONING PART

Check the following.

- Harness connectors E211, M41
- Harness for open or short between ICC brake hold relay and ECM

>> Repair open circuit or short to ground or short to power in harness or connectors.

11. CHECK ICC BRAKE HOLD RELAY

Refer to EC-1270, "Component Inspection" .

OK >> GO TO 17.
NG >> Replace ICC brake hold relay.

12. CHECK STOP LAMP SWITCH POWER SUPPLY CIRCUIT

1. Turn ignition switch OFF.
2. Disconnect stop lamp switch harness connector.

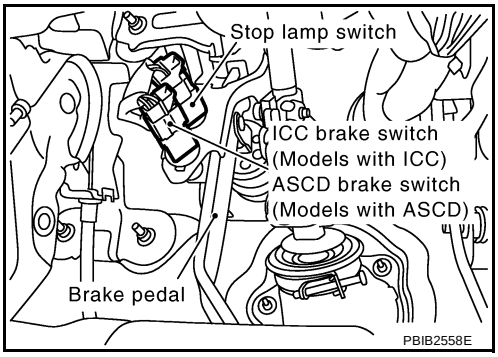

3. Check voltage between stop lamp switch terminal 1 and ground with CONSULT -II or tester.

Voltage: Battery voltage

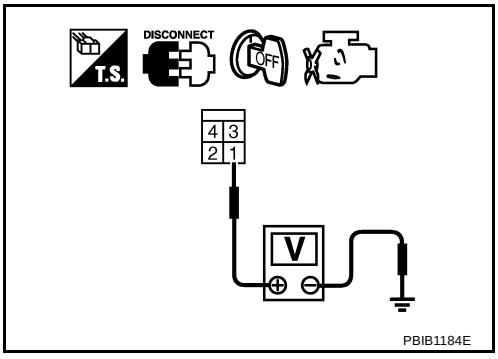

OK or NG

OK >> GO TO 14.
NG >> GO TO 13.

13. DETECT MALFUNCTIONING PART

Check the following.

- Fuse block (J/B) connector E201
- 10A fuse
- Harness for open or short between stop lamp switch and battery

>> Repair open circuit or short to ground or short to power in harness or connectors.

14. CHECK STOP LAMP SWITCH INPUT SIGNAL CIRCUIT FOR OPEN AND SHORT

1. Disconnect ECM harness connector.
2. Check harness continuity between ECM terminal 101 and stop lamp switch terminal 2. Refer to Wiring Diagram.

Continuity should exist.

3. Also check harness for short to ground and short to power.

OK or NG

OK >> GO TO 16.
NG >> GO TO 15.

15. DETECT MALFUNCTIONING PART

Check the following.

- Harness connectors E211, M41
- Harness for open or short between ECM and stop lamp switch

>> Repair open circuit or short to ground or short to power in harness or connectors.

16. CHECK STOP LAMP SWITCH

Refer to EC-1270, "Component Inspection"

OK or NG

OK >> GO TO 17.
NG >> Replace stop lamp switch.

17. CHECK INTERMITTENT INCIDENT

Refer to EC-854, "TROUBLE DIAGNOSIS FOR INTERMITTENT INCIDENT" .

>> **INSPECTION END**

Component Inspection

ABS00DCH

ICC BRAKE SWITCH

1. Turn ignition switch OFF.
2. Disconnect ICC brake switch harness connector.
3. Check continuity between ICC brake switch terminals 1 and 2 under the following conditions.

Condition	Continuity
When brake pedal: Fully released.	Should exist.
When brake pedal: Slightly depressed.	Should not exist.

4. If NG, adjust ICC brake switch installation, refer to BR-6, "BRAKE PEDAL" , and perform step 3 again.

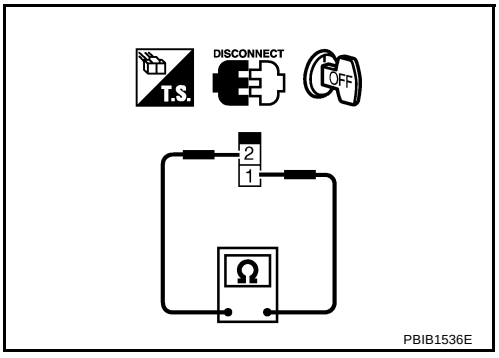

STOP LAMP SWITCH

1. Turn ignition switch OFF.
2. Disconnect stop lamp switch harness connector.
3. Check continuity between stop lamp switch terminals 1 and 2 under the following conditions.

Condition	Continuity
When brake pedal: Fully released.	Should not exist.
When brake pedal: Slightly depressed.	Should exist.

4. If NG, adjust stop lamp switch installation, refer to BR-6, "BRAKE PEDAL" , and perform step 3 again.

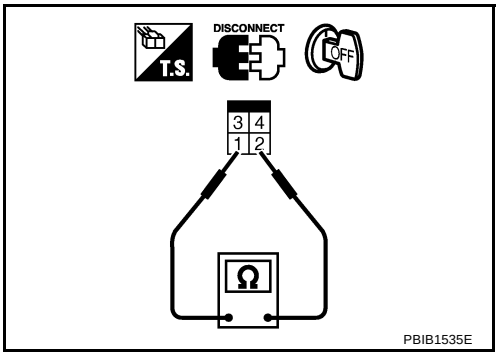

ICC BRAKE HOLD RELAY

1. Apply 12V direct current between ICC brake hold relay terminals 1 and 2.
2. Check continuity between relay terminals 3 and 4, 6 and 7 under the following conditions.

Condition	Between terminals	Continuity
12V direct current supply between terminals 1 and 2	3 and 4	Should not exist
	6 and 7	Should exist
No current supply	3 and 4	Should exist
	6 and 7	Should not exist

3. If NG, replace ICC brake hold relay.

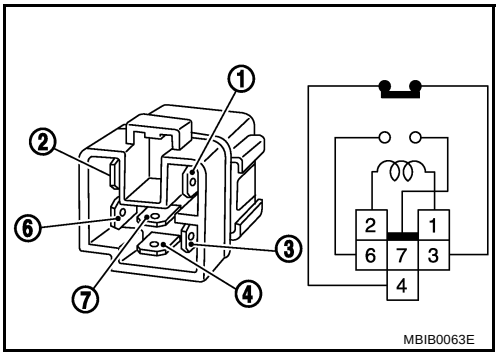

DTC P1572 ASCD BRAKE SWITCH

PFP:25320

Component Description

ABS007UM

When the brake pedal is depressed, ASCD brake switch is turned OFF and stop lamp switch is turned ON. ECM detects the state of the brake pedal by this input of two kinds (ON/OFF signal).
Refer to EC-727, "AUTOMATIC SPEED CONTROL DEVICE (ASCD)" for the ASCD function.

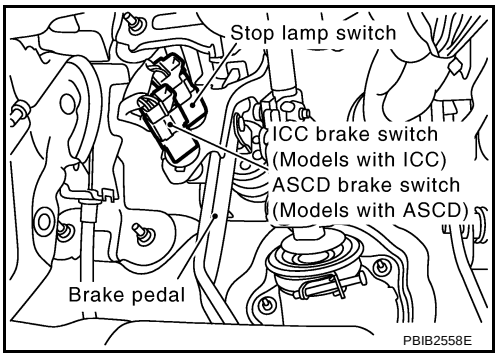

CONSULT-II Reference Value in Data Monitor Mode

ABS007UN

Specification data are reference values.

MONITOR ITEM	CONDITION		SPECIFICATION
BRAKE SW1 (ASCD brake switch)	● Ignition switch: ON	Brake pedal: Fully released	ON
		Brake pedal: Slightly depressed	OFF
BRAKE SW2 (stop lamp switch)	● Ignition switch: ON	Brake pedal: Fully released	OFF
		Brake pedal: Slightly depressed	ON

On Board Diagnosis Logic

ABS00E5H

This self-diagnosis has the one trip detection logic.
The MIL will not light up for this diagnosis.

NOTE:

- **If DTC P1572 is displayed with DTC P0605, first perform the trouble diagnosis for DTC P0605. Refer to EC-1134, "DTC P0605 ECM" .**
- **This self-diagnosis has the one trip detection logic. When malfunction A is detected, DTC is not stored in ECM memory. And in that case, 1st trip DTC and 1st trip freeze frame data are displayed. 1st trip DTC is erased when ignition switch OFF. And even when malfunction A is detected in two consecutive trips, DTC is not stored in ECM memory.**

DTC No.	Trouble diagnosis name	DTC detecting condition		Possible cause
P1572 1572	ASCD brake switch	A)	● When the vehicle speed is above 30 km/h (19 MPH), ON signals from the stop lamp switch and the ASCD brake switch are sent to the ECM at the same time.	● Harness or connectors (The stop lamp switch circuit is shorted.) ● Harness or connectors (The ASCD brake switch circuit is shorted.) ● Stop lamp switch ● ASCD brake switch ● Incorrect stop lamp switch installation ● Incorrect ASCD brake switch installation ● ECM
		B)	● ASCD brake switch signal is not sent to ECM for extremely long time while the vehicle is driving.	

DTC Confirmation Procedure

ABS00E5I

CAUTION:

Always drive vehicle at a safe speed.

NOTE:

- If DTC Confirmation Procedure has been previously conducted, always turn ignition switch OFF and wait at least 10 seconds before conducting the next test.
- Procedure for malfunction B is not described here. It takes extremely long time to complete procedure for malfunction B. By performing procedure for malfunction A, the incident that causes malfunction B can be detected.

TESTING CONDITION:

Steps 4 and 5 may be conducted with the drive wheels lifted in the shop or by driving the vehicle. If a road test is expected to be easier, it is unnecessary to lift the vehicle.

WITH CONSULT-II

1. Start engine (VDC switch OFF).
2. Select “DATA MONITOR” mode with CONSULT-II.
3. Press MAIN switch and make sure that CRUISE lamp lights up.
4. Drive the vehicle for at least 5 consecutive seconds under the following conditions.

VHCL SPEED SE	More than 30 km/h (19 MPH)
Selector lever	Suitable position

If 1st trip DTC is detected, go to EC-1274, "Diagnostic Procedure" .
If 1st trip DTC is not detected, go to the following step.

DATA MONITOR	
MONITOR	NO DTC
ENG SPEED	XXX rpm
VHCL SPEED SE	XXX km/h
CRUISE LAMP	ON
BRAKE SW 1	ON
BRAKE SW 2	OFF

PBIB2386E

5. Drive the vehicle for at least 5 consecutive seconds under the following conditions.

VHCL SPEED SE	More than 30 km/h (19 MPH)
Selector lever	Suitable position
Driving location	Depress the brake pedal for more than five seconds so as not to come off from the above-mentioned vehicle speed.

6. If 1st trip DTC is detected, go to EC-1274, "Diagnostic Procedure" .

WITH GST

Follow the procedure “WITH CONSULT-II” above.

Wiring Diagram

ABS007UQ

EC-ASC/BS-01

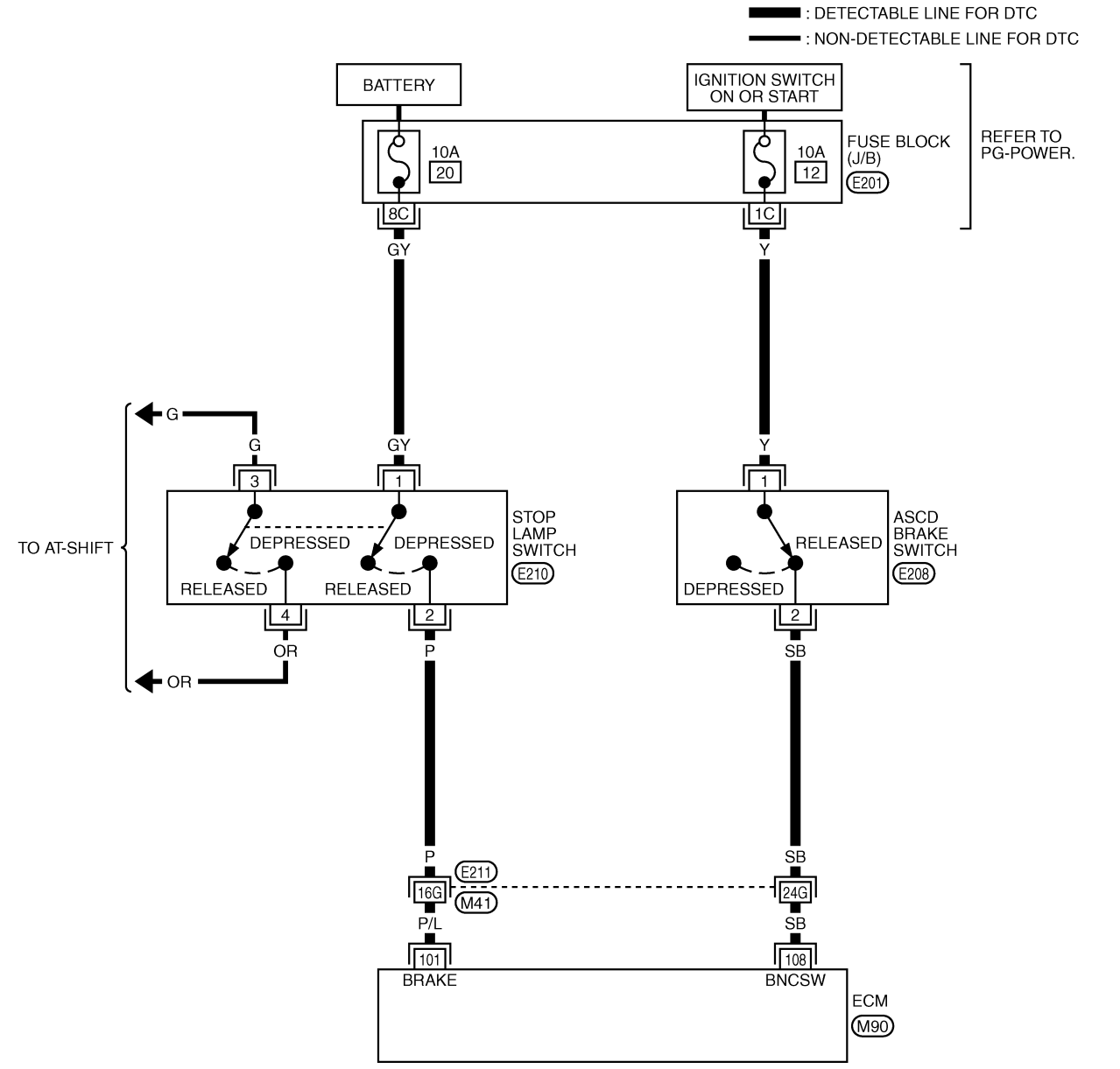

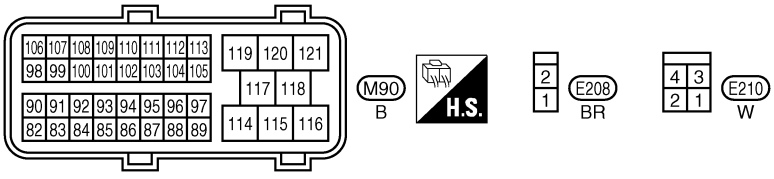

REFER TO THE FOLLOWING.

E211 -SUPER MULTIPLE JUNCTION (SMJ)

E201 -FUSE BLOCK-JUNCTION BOX (J/B)

TBWM0422E

Specification data are reference values and are measured between each terminal and ground.

CAUTION:

Do not use ECM ground terminals when measuring input/output voltage. Doing so may result in damage to the ECM's transistor. Use a ground other than ECM terminals, such as the ground.

TERMINAL NO.	WIRE COLOR	ITEM	CONDITION	DATA (DC Voltage)
101	P/L	Stop lamp switch	**[Ignition switch: OFF]** ● Brake pedal: Fully released	Approximately 0V
			[Ignition switch: OFF] ● Brake pedal: Slightly depressed	BATTERY VOLTAGE (11 - 14V)
108	SB	ASCD brake switch	**[Ignition switch: ON]** ● Brake pedal: Slightly depressed	Approximately 0V
			[Ignition switch: ON] ● Brake pedal: Fully released	BATTERY VOLTAGE (11 - 14V)

Diagnostic Procedure

ABS007UR

1. CHECK OVERALL FUNCTION-I

With CONSULT-II

1. Turn ignition switch ON.
2. Select “BRAKE SW1” in “DATA MONITOR” mode with CONSULT-II.
3. Check “BRAKE SW1” indication under the following conditions.

CONDITION	INDICATION
When brake pedal: Slightly depressed	OFF
When brake pedal: Fully released	ON

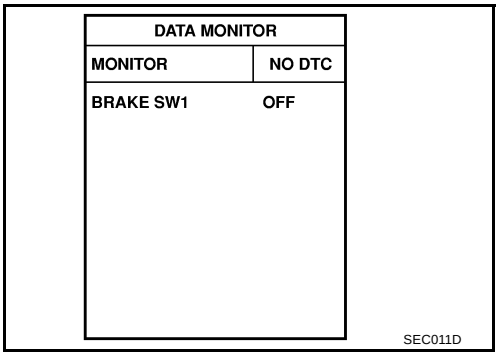

Without CONSULT-II

1. Turn ignition switch ON.
2. Check voltage between ECM terminal 108 and ground under the following conditions.

CONDITION	VOLTAGE
When brake pedal: Slightly depressed	Approximately 0V
When brake pedal: Fully released	Battery voltage

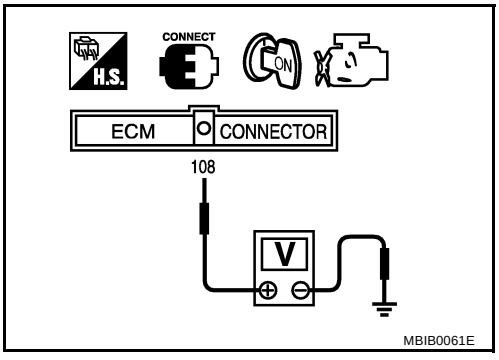

OK or NG

OK >> GO TO 2.
NG >> GO TO 3.

2. CHECK OVERALL FUNCTION-II

With CONSULT-II

Check “BRAKE SW2” indication in “DATA MONITOR” mode.

CONDITION	INDICATION
When brake pedal: Fully released	OFF
When brake pedal: Slightly depressed	ON

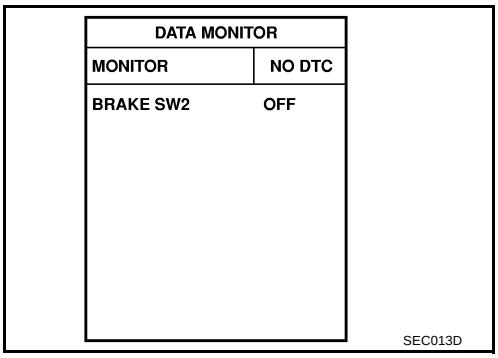

Without CONSULT-II

Check voltage between ECM terminal 101 and ground under the following conditions.

CONDITION	VOLTAGE
When brake pedal: Fully released	Approximately 0V
When brake pedal: Slightly depressed	Battery voltage

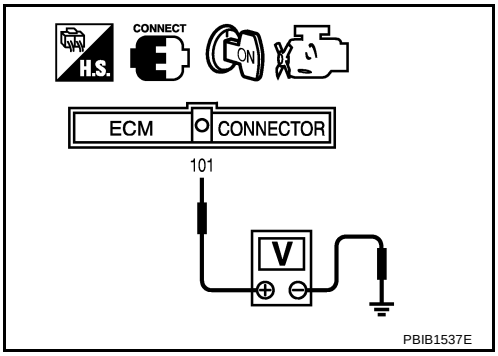

OK or NG

OK >> GO TO 13.
NG >> GO TO 8.

3. CHECK ASCD BRAKE SWITCH POWER SUPPLY CIRCUIT

1. Turn ignition switch OFF.
2. Disconnect ASCD brake switch harness connector.
3. Turn ignition switch ON.

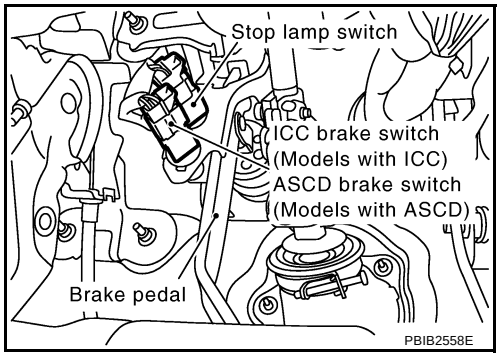

4. Check voltage between ASCD brake switch terminal 1 and ground with CONSULT-II or tester.

Voltage: Battery voltage

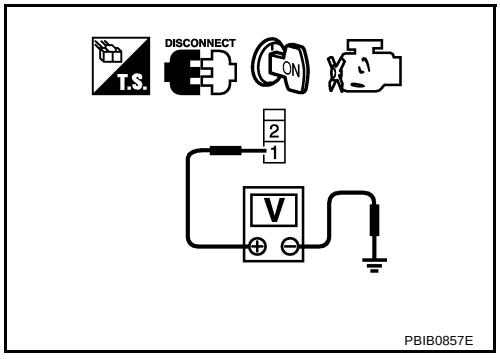

OK or NG

OK >> GO TO 5.
NG >> GO TO 4.

4. DETECT MALFUNCTIONING PART

Check the following.

- Fuse block (J/B) connector E201
- 10A fuse
- Harness for open or short between ASCD brake switch and fuse

>> Repair open circuit or short to ground or short to power in harness or connectors.

5. CHECK ASCD BRAKE SWITCH INPUT SIGNAL CIRCUIT FOR OPEN AND SHORT

1. Turn ignition switch OFF.
2. Disconnect ECM harness connector.
3. Check harness continuity between ECM terminal 108 and ASCD brake switch terminal 2. Refer to Wiring Diagram.

Continuity should exist.

4. Also check harness for short to ground and short to power.

OK or NG

OK >> GO TO 7.
NG >> GO TO 6.

6. DETECT MALFUNCTIONING PART

Check the following.

- Harness connectors E211, M41
- Harness for open or short between ECM and ASCD brake switch

>> Repair open circuit or short to ground or short to power in harness or connectors.

7. CHECK ASCD BRAKE SWITCH

Refer to EC-1278, "Component Inspection"

OK or NG

OK >> GO TO 13.
NG >> Replace ASCD brake switch.

8. CHECK STOP LAMP SWITCH POWER SUPPLY CIRCUIT

1. Turn ignition switch OFF.
2. Disconnect stop lamp switch harness connector.

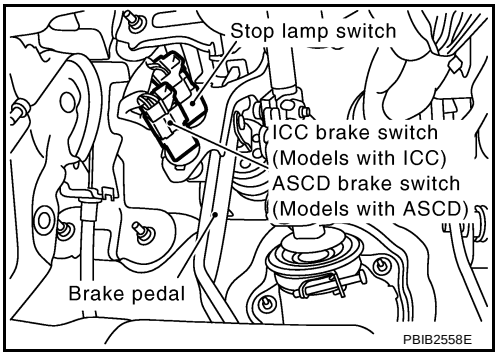

3. Check voltage between stop lamp switch terminal 1 and ground with CONSULT-II or tester.

Voltage: Battery voltage

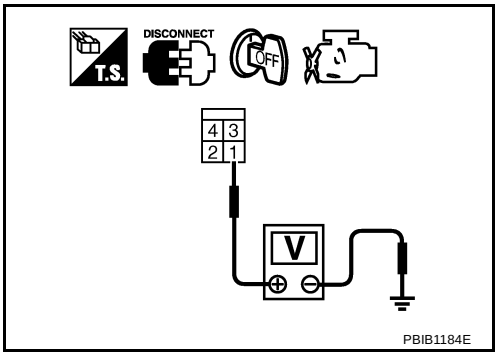

OK or NG

OK >> GO TO 10.
NG >> GO TO 9.

9. DETECT MALFUNCTIONING PART

Check the following.

- Fuse block (J/B) connector E201
- 10A fuse
- Harness for open or short between stop lamp switch and battery

>> Repair open circuit or short to ground or short to power in harness or connectors.

10. CHECK STOP LAMP SWITCH INPUT SIGNAL CIRCUIT FOR OPEN AND SHORT

1. Disconnect ECM harness connector.
2. Check harness continuity between ECM terminal 101 and stop lamp switch terminal 2. Refer to Wiring Diagram.

Continuity should exist.

3. Also check harness for short to ground and short to power.

OK or NG

OK >> GO TO 12.
NG >> GO TO 11.

11. DETECT MALFUNCTIONING PART

Check the following.

- Harness connectors E211, M41
- Harness for open or short between ECM and stop lamp switch

>> Repair open circuit or short to ground or short to power in harness or connectors.

12. CHECK STOP LAMP SWITCH

Refer to EC-1278, "Component Inspection"

OK or NG

OK >> GO TO 13.
NG >> Replace stop lamp switch.

13. CHECK INTERMITTENT INCIDENT

Refer to EC-854, "TROUBLE DIAGNOSIS FOR INTERMITTENT INCIDENT" .

>> **INSPECTION END**

Component Inspection

ABS007US

ASCD BRAKE SWITCH

1. Turn ignition switch OFF.
2. Disconnect ASCD brake switch harness connector.
3. Check harness continuity between ASCD brake switch terminals 1 and 2 under the following conditions.

Condition	Continuity
When brake pedal: Fully released.	Should exist.
When brake pedal: Slightly depressed.	Should not exist.

4. If NG, adjust ASCD brake switch installation, refer to BR-6, "BRAKE PEDAL" , and perform step 3 again.

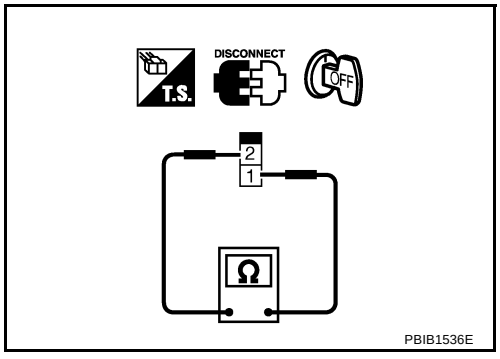

STOP LAMP SWITCH

1. Turn ignition switch OFF.
2. Disconnect stop lamp switch harness connector.
3. Check harness continuity between stop lamp switch terminals 1 and 2 under the following conditions.

Condition	Continuity
When brake pedal: Fully released.	Should not exist.
When brake pedal: Slightly depressed.	Should exist.

4. If NG, adjust stop lamp switch installation, refer to BR-6, "BRAKE PEDAL" , and perform step 3 again.

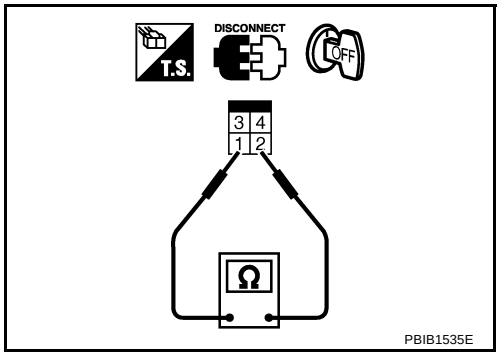

DTC P1574 ICC VEHICLE SPEED SENSOR

PFP:31036

Component Description

ABS007UT

The ECM receives two vehicle speed signals via CAN communication line. One is sent from “unified meter and A/C amp.”, and the other is from TCM (Transmission control module). The ECM uses these signals for ICC control. Refer to ACS-6, "DESCRIPTION" for ICC functions.

On Board Diagnosis Logic

ABS007UU

This self-diagnosis has the one trip detection logic.
The MIL will not light up for this diagnosis.

NOTE:

- **If DTC P1574 is displayed with DTC U1000, U1001, first perform the trouble diagnosis for DTC U1000, U1001. Refer to EC-862, "DTC U1000, U1001 CAN COMMUNICATION LINE" .**
- **If DTC P1574 is displayed with DTC P0500, first perform the trouble diagnosis for DTC P0500. Refer to EC-1123, "DTC P0500 VSS" .**
- **If DTC P1574 is displayed with DTC P0605, first perform the trouble diagnosis for DTC P0605. Refer to EC-1134, "DTC P0605 ECM".**

DTC No.	Trouble diagnosis name	DTC detecting condition	Possible cause
P1574 1574	ICC vehicle speed sensor	ECM detects a difference between two vehicle speed signals is out of the specified range.	● Harness or connectors (The CAN communication line is open or shorted.) ● Unified meter and A/C amp. ● ABS actuator and electric unit (control unit) ● Wheel sensor ● TCM ● ECM

DTC Confirmation Procedure

ABS007UV

CAUTION:
Always drive vehicle at a safe speed.

NOTE:
If DTC Confirmation Procedure has been previously conducted, always turn ignition switch OFF and wait at least 10 seconds before conducting the next test.

TESTING CONDITION:
Step 3 may be conducted with the drive wheels lifted in the shop or by driving the vehicle. If a road test is expected to be easier, it is unnecessary to lift the vehicle.

WITH CONSULT-II

1. Start engine (VDC switch OFF).
2. Select “DATA MONITOR” mode with CONSULT-II.
3. Drive the vehicle at more than 40 km/h (25MPH).
4. If DTC is detected, go to EC-1280, "Diagnostic Procedure" .

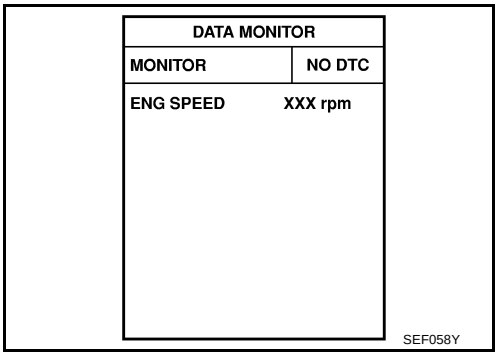

WITH GST

Follow the procedure “WITH CONSULT-II” above.

Diagnostic Procedure

ABS007UW

1. CHECK DTC WITH TCM

Check DTC with TCM. Refer to AT-39, "ON BOARD DIAGNOSTIC (OBD) SYSTEM" .

OK or NG

OK >> GO TO 2.
NG >> Perform trouble shooting relevant to DTC indicated.

2. CHECK DTC WITH “ABS ACTUATOR AND ELECTRIC UNIT (CONTROL UNIT)”

Refer to BRC-12, "TROUBLE DIAGNOSIS" .

OK or NG

OK >> GO TO 3.
NG >> Repair or replace.

3. CHECK DTC WITH “UNIFIED METER AND A/C AMP.”

Check combination meter function.
Refer to DI-28, "UNIFIED METER AND A/C AMP" .

>> **INSPECTION END**

DTC P1574 ASCD VEHICLE SPEED SENSOR

PFP:31036

Component Description

ABS007UX

The ECM receives two vehicle speed sensor signals via CAN communication line. One is sent from “unified meter and A/C amp.”, and the other is from TCM (Transmission control module). The ECM uses these signals for ASCD control. Refer to EC-727, "AUTOMATIC SPEED CONTROL DEVICE (ASCD)" for ASCD functions.

On Board Diagnosis Logic

ABS007UY

This self-diagnosis has the one trip detection logic.
The MIL will not light up for this diagnosis.

NOTE:

- **If DTC P1574 is displayed with DTC U1000, U1001, first perform the trouble diagnosis for DTC U1000, U1001. Refer to EC-862, "DTC U1000, U1001 CAN COMMUNICATION LINE" .**
- **If DTC P1574 is displayed with DTC P0500, first perform the trouble diagnosis for DTC P0500. Refer to EC-1123, "DTC P0500 VSS"**
- **If DTC P1574 is displayed with DTC P0605, first perform the trouble diagnosis for DTC P0605. Refer to EC-1134, "DTC P0605 ECM"**

DTC No.	Trouble diagnosis name	DTC detecting condition	Possible cause
P1574 1574	ASCD vehicle speed sensor	ECM detects a difference between two vehicle speed signals is out of the specified range.	● Harness or connectors (The CAN communication line is open or shorted.) ● Unified meter and A/C amp. ● ABS actuator and electric unit (control unit) ● Wheel sensor ● TCM ● ECM

DTC Confirmation Procedure

ABS007UZ

CAUTION:
Always drive vehicle at a safe speed.

NOTE:
If DTC Confirmation Procedure has been previously conducted, always turn ignition switch OFF and wait at least 10 seconds before conducting the next test.

TESTING CONDITION:
Step 3 may be conducted with the drive wheels lifted in the shop or by driving the vehicle. If a road test is expected to be easier, it is unnecessary to lift the vehicle.

WITH CONSULT-II

1. Start engine (VDC switch OFF).
2. Select “DATA MONITOR” mode with CONSULT-II.
3. Drive the vehicle at more than 40 km/h (25 MPH).
4. If DTC is detected, go to EC-1282, "Diagnostic Procedure" .

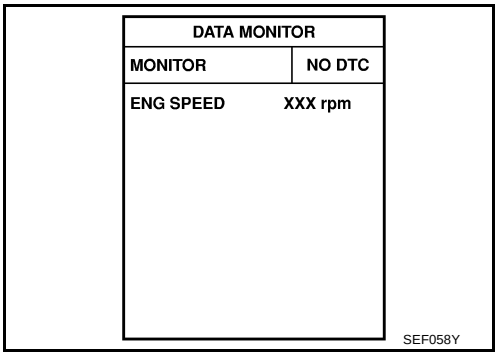

WITH GST

Follow the procedure “WITH CONSULT-II” above.

Diagnostic Procedure

ABS007V0

1. CHECK DTC WITH TCM

Check DTC with TCM. Refer to AT-39 .

OK or NG

OK >> GO TO 2.
NG >> Perform trouble shooting relevant to DTC indicated.

2. CHECK DTC WITH “ABS ACTUATOR AND ELECTRIC UNIT (CONTROL UNIT)”

Refer to BRC-12, "TROUBLE DIAGNOSIS" .

OK or NG

OK >> GO TO 3.
NG >> Repair or replace.

3. CHECK DTC WITH “UNIFIED METER AND A/C AMP.”

Refer to DI-28, "UNIFIED METER AND A/C AMP" .

>> **INSPECTION END**

DTC P1706 PNP SWITCH

PFP:32006

Component Description

ABS00DC4

When the selector lever position is P or N, park/neutral position (PNP) switch is ON.
ECM detects the position because the continuity of the line (the ON signal) exists.

CONSULT-II Reference Value in Data Monitor Mode

ABS00DC5

Specification data are reference values.

MONITOR ITEM	CONDITION		SPECIFICATION
P/N POSI SW	● Ignition switch: ON	Selector lever: P or N	ON
		Selector lever: Except above	OFF

On Board Diagnosis Logic

ABS00DC6

DTC No.	Trouble diagnosis name	DTC detecting condition	Possible cause
P1706 1706	Park/neutral position switch	The signal of the park/neutral position (PNP) switch is not changed in the process of engine starting and driving.	● Harness or connectors [The park/neutral position (PNP) switch circuit is open or shorted.] ● Park/neutral position (PNP) switch ● Unified meter and A/C amp. ● TCM

DTC Confirmation Procedure

ABS00DC7

CAUTION:
Always drive vehicle at a safe speed.

NOTE:
If DTC Confirmation Procedure has been previously conducted, always turn ignition switch OFF and wait at least 10 seconds before conducting the next test.

WITH CONSULT-II

1. Turn ignition switch ON.
2. Select “P/N POSI SW” in “DATA MONITOR” mode with CONSULT-II. Then check the “P/N POSI SW” signal under the following conditions.

Position (Selector lever)	Known-good signal
N or P position	ON
Except above position	OFF

If NG, go to EC-1286, "Diagnostic Procedure" .
If OK, go to following step.

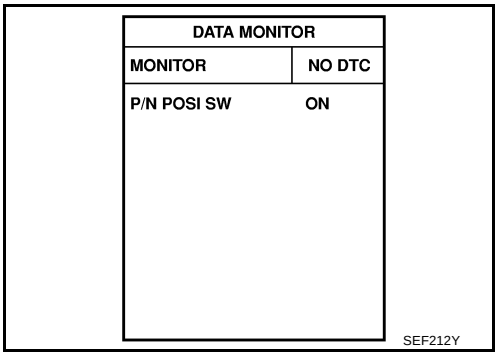

3. Select “DATA MONITOR” mode with CONSULT-II.
4. Start engine and warm it up to normal operating temperature.
5. Maintain the following conditions for at least 60 consecutive seconds.

ENG SPEED	1,200 - 6,375 rpm
COOLAN TEMP/S	More than 70°C (158°F)
B/FUEL SCHDL	2.0 - 31.8 msec
VHCL SPEED SE	More than 64 km/h (40 MPH)
Selector lever	Suitable position

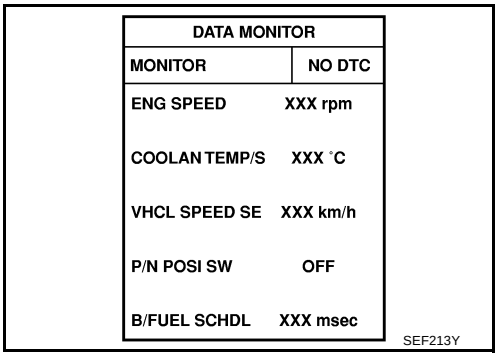

6. If 1st trip DTC is detected, go to EC-1286, "Diagnostic Procedure" .

Overall Function Check

ABS00DC8

Use this procedure to check the overall function of the park/neutral position (PNP) switch circuit. During this check, a 1st trip DTC might not be confirmed.

WITH GST

1. Turn ignition switch ON.
2. Check voltage between ECM terminal 102 (PNP switch signal) and ground under the following conditions.

Position (Selector lever)	Voltage (Known good data)
P or N position	Approx. 0V
Except above position	BATTERY VOLTAGE (11 - 14V)

3. If NG, go to EC-1286, "Diagnostic Procedure" .

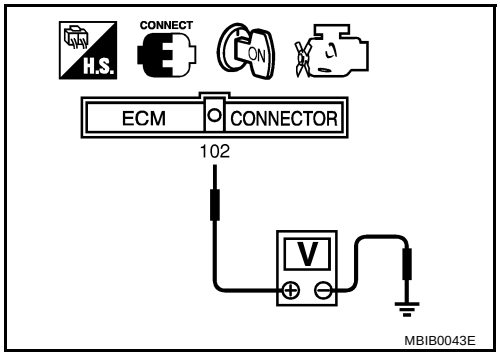

Wiring Diagram

ABS00DC9

EC-PNP/SW-01

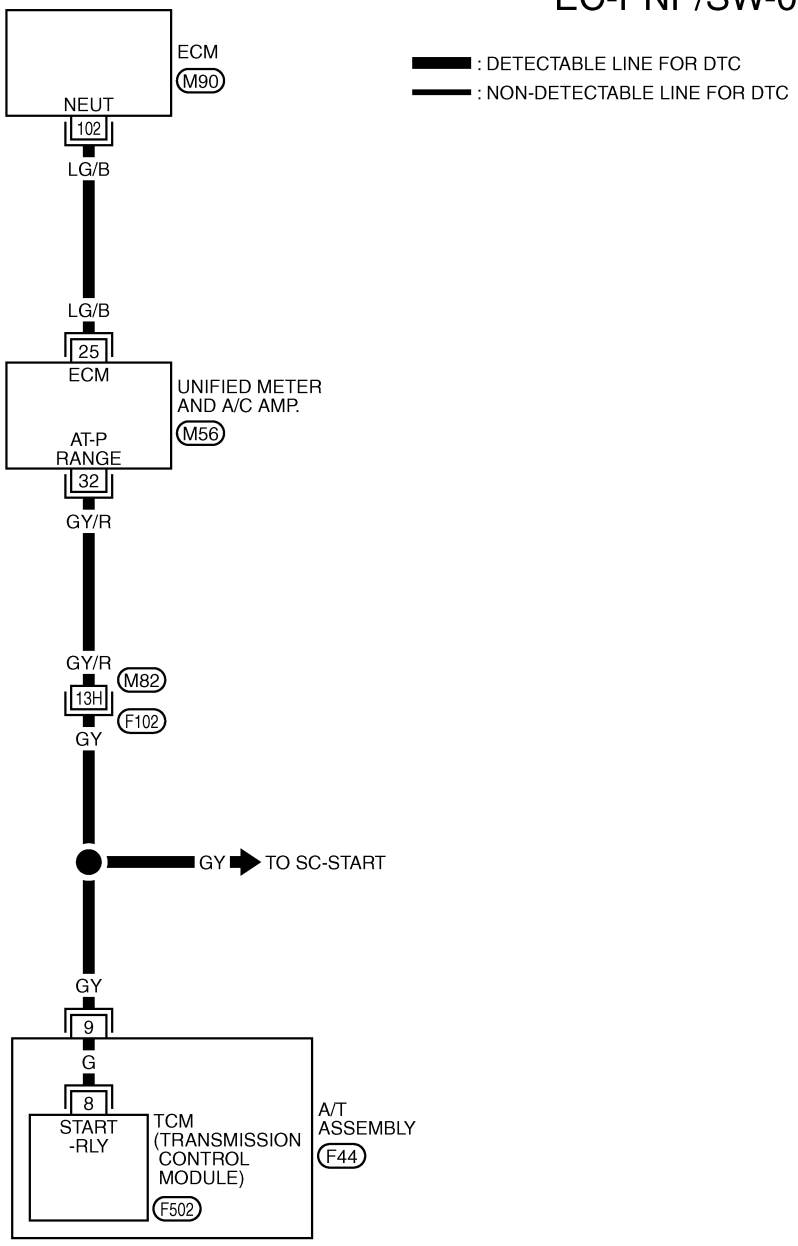

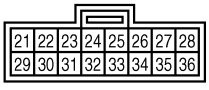

M56
GY

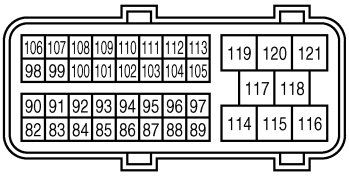

M90
B

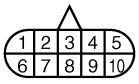

F44
DGY

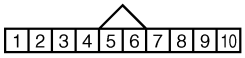

F502 *
GY

*: THIS CONNECTOR IS NOT SHOWN IN "HARNESS LAYOUT", PG SECTION.

REFER TO THE FOLLOWING.
F102 -SUPER MULTIPLE JUNCTION (SMJ)

TBWM0521E

Specification data are reference values and are measured between each terminal and ground.

CAUTION:

Do not use ECM ground terminals when measuring input/output voltage. Doing so may result in damage to the ECM's transistor. Use a ground other than ECM terminals, such as the ground.

TERMINAL NO.	WIRE COLOR	ITEM	CONDITION	DATA (DC Voltage)
102	LG/B	PNP switch	**[Ignition switch: ON]** ● Selector lever: P or N	Approximately 0V
			[Ignition switch: ON] ● Selector lever: Except above	BATTERY VOLTAGE (11 - 14V)

Diagnostic Procedure

ABS00DCA

1. CHECK DTC WITH TCM

Refer to AT-39, "OBD-II Diagnostic Trouble Code (DTC)" .

OK or NG

OK >> GO TO 2.
NG >> Repair or replace.

2. CHECK STARTING SYSTEM

Turn ignition switch OFF, then turn it to START.

Does starter motor operate?

Yes or No

Yes >> GO TO 3.
No >> Refer to SC-10, "STARTING SYSTEM" .

3. CHECK PNP SWITCH INPUT SIGNAL CIRCUIT FOR OPEN AND SHORT-I

1. Turn ignition switch OFF.
2. Disconnect A/T assembly harness connector.
3. Disconnect “unified meter and A/C amp.” harness connector.
4. Check harness continuity between A/T assembly terminal 9 and “unified meter and A/C amp.” terminal 32. Refer to Wiring Diagram.

   Continuity should exist.

5. Also check harness for short to ground and short to power.

OK or NG

OK >> GO TO 5.
NG >> GO TO 4.

4. DETECT MALFUNCTIONING PART

Check the following.

- Harness connectors F102, M82
- Harness for open or short between A/T assembly and “unified meter and A/C amp.”

>> Repair open circuit or short to ground or short to power in harness or connectors.

5. CHECK PNP SWITCH INPUT SIGNAL CIRCUIT FOR OPEN AND SHORT-II

1. Disconnect ECM harness connector.
2. Check harness continuity between ECM terminal 102 and “unified meter and A/C amp.” terminal 25. Refer to Wiring Diagram.

   Continuity should exist.

3. Also check harness for short to ground and short to power.

OK or NG

OK >> GO TO 6.
NG >> Repair open circuit or short to ground or short to power in harness or connectors.

6. CHECK PNP SWITCH INPUT SIGNAL CIRCUIT FOR OPEN AND SHORT-III

1. Check harness continuity between A/T assembly terminal 9 and TCM terminal 8. Refer to AT-109, "DTC P0615 START SIGNAL CIRCUIT" .

   Continuity should exist.

2. Also check harness for short to ground and short to power.

OK or NG

OK >> GO TO 7.
NG >> Repair open circuit or short to ground or short to power in harness or connectors.

7. CHECK INTERMITTENT INCIDENT

Refer to EC-854, "TROUBLE DIAGNOSIS FOR INTERMITTENT INCIDENT" .

OK or NG

OK >> GO TO 8.
NG >> Repair or replace.

8. REPLACE “UNIFIED METER AND A/C AMP.”

Refer to DI-28, "UNIFIED METER AND A/C AMP" .

>> **INSPECTION END**

DTC P1720 VSS

PFP:31036

Description

ABS007V8

NOTE:
If DTC P1720 is displayed with DTC U1000 or U1001, first perform the trouble diagnosis for DTC U1000, U1001. Refer to EC-862, "DTC U1000, U1001 CAN COMMUNICATION LINE" .
ECM receives two vehicle speed sensor signals via CAN communication line. One is sent from “unified meter and A/C amp.”, and the other is from TCM (Transmission control module). ECM uses these two signals for engine control.

CONSULT-II Reference Value in Data Monitor Mode

ABS007V9

Specification data are reference values.

MONITOR ITEM	CONDITION	SPECIFICATION
VEHICLE SPEED	● Turn drive wheels and compare CONSULT-II value with the speedometer indication.	Almost the same speed as the speedometer indication

On Board Diagnosis Logic

ABS007VA

The MIL will not light up for this diagnosis.

DTC No.	Trouble diagnosis name	DTC detecting condition	Possible cause
P1720 1720	Vehicle speed sensor (A/T output)	ECM detects a difference between two vehicle speed sensor signals is out of the specified range.	● Harness or connectors (The CAN communication line is open or shorted) ● Harness or connectors (Revolution sensor circuit is open or shorted) ● Harness or connectors (Wheel sensor circuit is open or shorted.) ● TCM ● ABS actuator and electric unit (control unit) ● Unified meter and A/C amp.

DTC Confirmation Procedure

ABS007VB

CAUTION:
Always drive vehicle at a safe speed.

NOTE:
If DTC Confirmation Procedure has been previously conducted, always turn ignition switch OFF and wait at least 10 seconds before conducting the next test.

WITH CONSULT-II

1. Turn ignition switch ON.
2. Select “DATA MONITOR” mode with CONSULT-II.
3. Start engine.
4. Drive vehicle at a speed of 20 km/h (12 MPH) or more for at least 5 seconds without brake pedal depressing.
5. If 1st trip DTC is detected, go to EC-1289, "Diagnostic Procedure" .

WITH GST

Follow the procedure “WITH CONSULT-II” above.

Diagnostic Procedure

ABS007VC

1. CHECK DTC WITH TCM

Check DTC with TCM. Refer to AT-43, "TROUBLE DIAGNOSIS" .

OK or NG

OK >> GO TO 2.
NG >> Perform trouble shooting relevant to DTC indicated.

2. CHECK DTC WITH “ABS ACTUATOR AND ELECTRIC UNIT (CONTROL UNIT)”

Check DTC with “ABS actuator and electric unit (control unit)”. Refer to BRC-12, "TROUBLE DIAGNOSIS" .

OK or NG

OK >> GO TO 3.
NG >> Perform trouble shooting relevant to DTC indicated.

3. CHECK “UNIFIED METER AND A/C AMP.”

Check combination meter function. Refer to DI-28, "UNIFIED METER AND A/C AMP" .

>> **INSPECTION END**

DTC P1780 SHIFT CHANGE SIGNAL

PFP:31036

Description

ABS007VD

NOTE:
If DTC P1780 is displayed with DTC U1000 or U1001, first perform the trouble diagnosis for DTC U1000, U1001. Refer to EC-862, "DTC U1000, U1001 CAN COMMUNICATION LINE" .
ECM receives current gear position signal, next gear position signal, shift change signal, shift pattern signal through CAN communication line from TCM (Transmission control module). ECM uses these four signals for engine control.

On Board Diagnosis Logic

ABS007VE

The MIL will not light up for this diagnosis.

DTC No.	Trouble diagnosis name	DTC detecting condition		Possible cause
P1780 1780	Shift change signal	A)	The next gear position signal and the current gear position signal are not in the normal pattern compared with the shift pattern signal,	● Harness or connectors (CAN communication line circuit is open or shorted) ● TCM ● A/T assembly
		B)	The next gear position signal and the current gear position signal are different even through the shift change signal is OFF.	

DTC Confirmation Procedure

ABS007VF

CAUTION:
Always drive vehicle at a safe speed.

NOTE:
If DTC Confirmation Procedure has been previously conducted, always turn ignition switch OFF and wait at least 10 seconds before conducting the next test.

WITH CONSULT-II

1. Perform DTC confirmation procedure for DTC P1754, refer to AT-152, "DTC Confirmation Procedure" .
2. If 1st trip DTC is detected, go to AT-153, "Diagnostic Procedure" .

WITH GST

Follow the procedure “WITH CONSULT-II” above.

Diagnostic Procedure

ABS007VG

1. CHECK DTC WITH TCM

Check DTC with TCM. Refer to AT-43, "TROUBLE DIAGNOSIS" .

OK or NG

OK >> GO TO 2.
NG >> Perform trouble shooting relevant to DTC indicated.

2. CHECK TCM FUNCTION

Refer to AT-43, "TROUBLE DIAGNOSIS" .

OK or NG

OK >> GO TO 3.
NG >> Replace TCM. Refer to AT-7, "PRECAUTIONS" .

3. REPLACE ECM

1. Replace ECM.
2. Perform initialization of IVIS (NATS) system and registration of all IVIS (NATS) ignition key IDs. Refer to BL-215, "ECM Re-Communicating Function" .
3. Perform EC-786, "VIN Registration" .
4. Perform EC-786, "Accelerator Pedal Released Position Learning" .
5. Perform EC-786, "Throttle Valve Closed Position Learning" .
6. Perform EC-787, "Idle Air Volume Learning" .

>> **INSPECTION END**

DTC P1800 VIAS CONTROL SOLENOID VALVE

PFP:14955

Component Description

ABS00E5J

The VIAS control solenoid valve cuts the intake manifold vacuum signal for power valve actuator. It responds to ON/OFF signals from the ECM. When the solenoid is off, the vacuum signal from the intake manifold is cut. When the ECM sends an ON signal the coil pulls the plunger downward and feeds the vacuum signal to the power valve actuator.

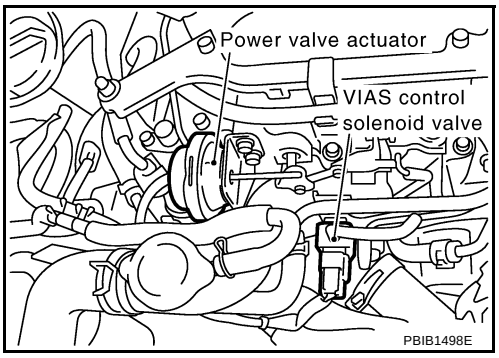

CONSULT-II Reference Value in Data Monitor Mode

ABS00E5K

Specification data are reference values.

MONITOR ITEM	CONDITION		SPECIFICATION
VIAS S/V	● Engine speed: Idle	Selector lever: P or N and/or Engine speed: More than 5,000 rpm	ON
		Except above	OFF

On Board Diagnosis Logic

ABS00E5L

The MIL will not light up for this self-diagnosis.

DTC No.	Trouble diagnosis name	DTC detecting condition	Possible cause
P1800 1800	VIAS control solenoid valve circuit	An excessively low or high voltage signal is sent to ECM through the valve	● Harness or connectors (The solenoid valve circuit is open or shorted.) ● VIAS control solenoid valve

DTC Confirmation Procedure

ABS00E5M

NOTE:
If DTC Confirmation Procedure has been previously conducted, always turn ignition switch OFF and wait at least 10 seconds before conducting the next test.
TESTING CONDITION:
Before performing the following procedure, confirm that battery voltage is between 11V at idle.

WITH CONSULT-II

1. Turn ignition switch ON.
2. Select “DATA MONITOR” mode with CONSULT-II.
3. Start engine and let it idle for at least 5 seconds.
4. If 1st trip DTC is detected, go to EC-1294, "Diagnostic Procedure" .

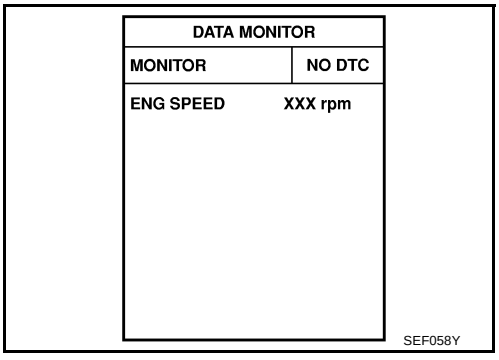

WITH GST

Follow the procedure “WITH CONSULT-II” above.

Wiring Diagram

ABS00E5N

EC-VIAS/V-01

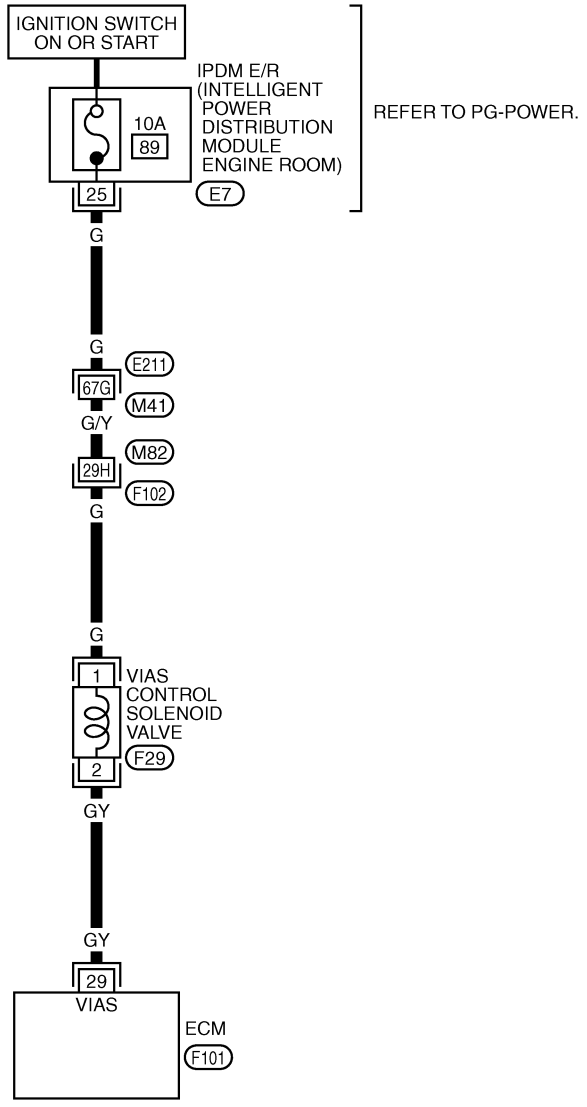

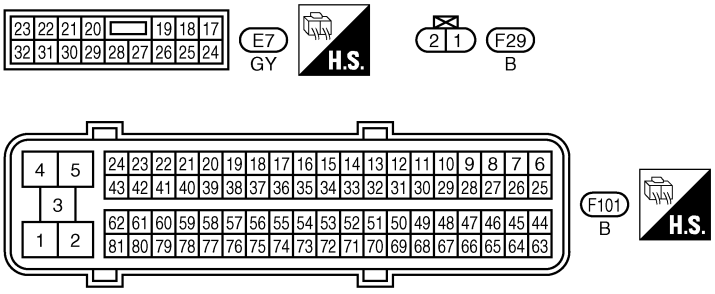

REFER TO THE FOLLOWING.
E211 , F102 -SUPER MULTIPLE JUNCTION (SMJ)

TBWM0848E

Specification data are reference values and are measured between each terminal and ground.

CAUTION:

Do not use ECM ground terminals when measuring input/output voltage. Doing so may result in damage to the ECM's transistor. Use a ground other than ECM terminals, such as the ground.

TERMINAL NO.	WIRE COLOR	ITEM	CONDITION	DATA (DC Voltage)
29	GY	VIAS control solenoid valve	**[Engine is running]** ● Selector lever: P or N	0 - 1.0V
			[Engine is running] ● Selector lever: D	BATTERY VOLTAGE (11 - 14V)
			[Engine is running] ● Engine speed: Above 5,000 rpm	0 - 1.0V

Diagnostic Procedure

ABS00E5O

1. CHECK VIAS CONTROL SOLENOID VALVE POWER SUPPLY CIRCUIT

1. Turn ignition switch OFF.
2. Disconnect VIAS control solenoid valve harness connector.
3. Turn ignition switch ON.

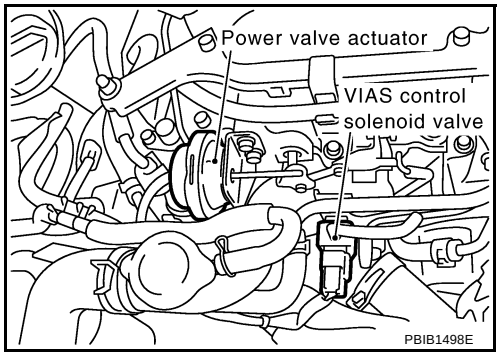

4. Check voltage between terminal 1 and ground with CONSULT-II or tester.

   Voltage: Battery voltage

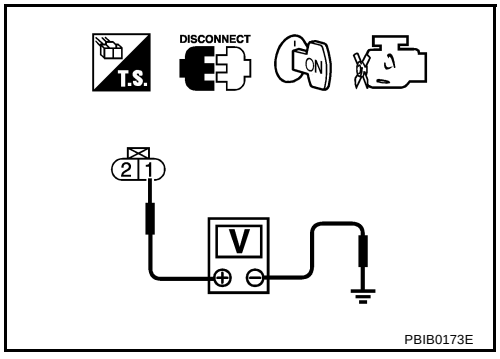

OK or NG

OK >> GO TO 3.
NG >> GO TO 2.

2. DETECT MALFUNCTIONING PART

Check the following.

- Harness connectors E211, M41
- Harness connectors M82, F102
- Harness for open or short between VIAS control solenoid valve and IPDM E/R

>> Repair harness or connectors.

3. CHECK VIAS CONTROL SOLENOID VALVE OUTPUT SIGNAL CIRCUIT FOR OPEN AND SHORT

1. Turn ignition switch OFF.
2. Disconnect ECM harness connector.
3. Check harness continuity between ECM terminal 29 and VIAS control solenoid valve terminal 2. Refer to Wiring Diagram.

   Continuity should exist.

4. Also check harness for short to ground and short to power.

OK or NG

OK >> GO TO 4.
NG >> Repair open circuit or short to ground or short to power in harness or connectors.

4. CHECK VIAS CONTROL SOLENOID VALVE

Refer to EC-1295, "Component Inspection" .

OK or NG

OK >> GO TO 5.
NG >> Replace VIAS control solenoid valve.

5. CHECK INTERMITTENT INCIDENT

Refer to EC-854, "TROUBLE DIAGNOSIS FOR INTERMITTENT INCIDENT" .

>> **INSPECTION END**

Component Inspection

ABS00E5P

VIAS CONTROL SOLENOID VALVE

With CONSULT-II

1. Reconnect harness connectors disconnected.
2. Turn ignition switch ON.
3. Perform “VIAS SOL VALVE” in “ACTIVE TEST” mode.
4. Check air passage continuity and operation delay time under the following conditions.

Condition VIAS SOL VALVE	Air passage continuity between A and B	Air passage continuity between A and C
ON	Yes	No
OFF	No	Yes

Operation takes less than 1 second.

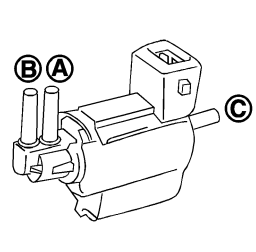

ACTIVE TEST	
VIAS SOL VALVE	ON
MONITOR	
ENG SPEED	XXX rpm

PBIB0177E

Without CONSULT-II

Check air passage continuity and operation delay time under the following conditions.

Condition	Air passage continuity between A and B	Air passage continuity between A and C
12V direct current supply between terminals 1 and 2	Yes	No
No supply	No	Yes

Operation takes less than 1 second.

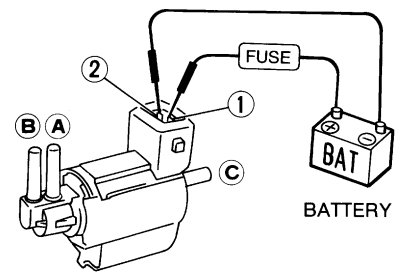

MEC488B

Removal and Installation

ABS00E5Q

VIAS CONTROL SOLENOID VALVE

Refer to EM-178, "INTAKE MANIFOLD" .

DTC P1805 BRAKE SWITCH

PFP:25320

Description

ABS007VH

Brake switch signal is applied to the ECM through the stop lamp switch when the brake pedal is depressed. This signal is used mainly to decrease the engine speed when the vehicle is driving.

CONSULT-II Reference Value in Data Monitor Mode

ABS007VI

Specification data are reference values.

MONITOR ITEM	CONDITION		SPECIFICATION
BRAKE SW	● Ignition switch: ON	Brake pedal: Fully released	OFF
		Brake pedal: Slightly depressed	ON

On Board Diagnosis Logic

ABS007VJ

The MIL will not light up for this diagnosis.

DTC No.	Trouble diagnosis name	DTC detecting condition	Possible cause
P1805 1805	Brake switch	A brake switch signal is not sent to ECM for extremely long time while the vehicle is driving.	● Harness or connectors (Stop lamp switch circuit is open or shorted.) ● Stop lamp switch

FAIL-SAFE MODE

When the malfunction is detected, ECM enters fail-safe mode.

Engine operating condition in fail-safe mode	
ECM controls the electric throttle control actuator by regulating the throttle opening to a small range. Therefore, acceleration will be poor.	
Vehicle condition	Driving condition
When engine is idling	Normal
When accelerating	Poor acceleration

DTC Confirmation Procedure

ABS007VK

WITH CONSULT-II

1. Turn ignition switch ON.
2. Fully depress the brake pedal for at least 5 seconds.
3. Erase the DTC with CONSULT-II.
4. Select “DATA MONITOR” mode with CONSULT-II.
5. If 1st trip DTC is detected, go to EC-1299, "Diagnostic Procedure" .

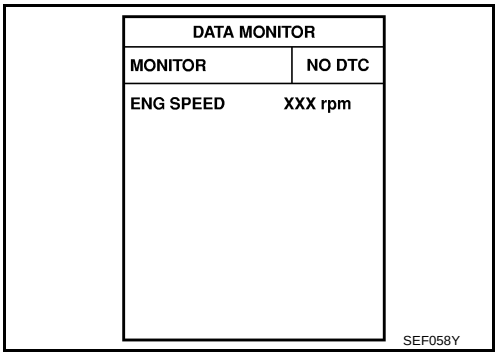

WITH GST

Follow the procedure “WITH CONSULT-II” above.

Wiring Diagram

ABS007VL

EC-BRK/SW-01

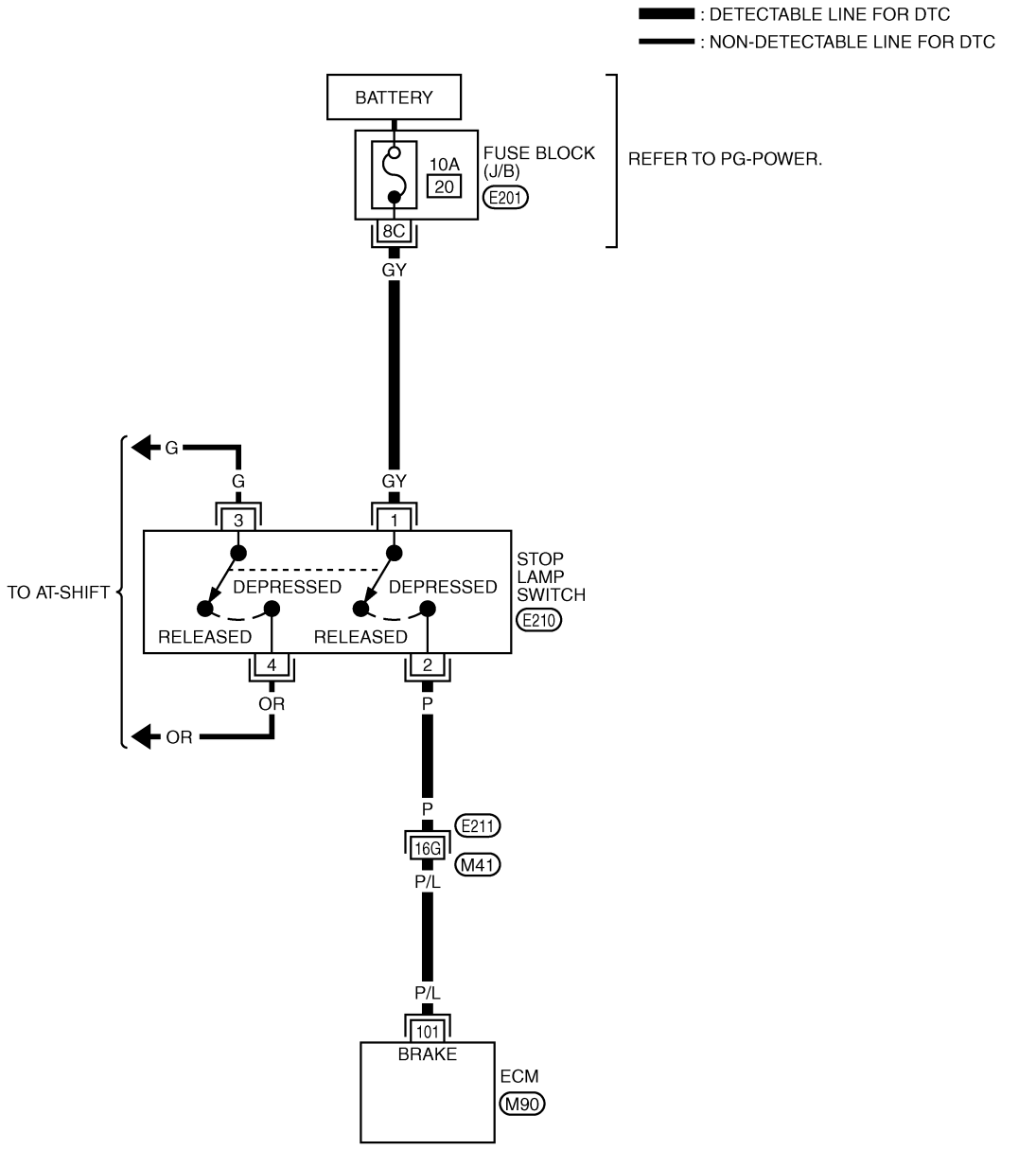

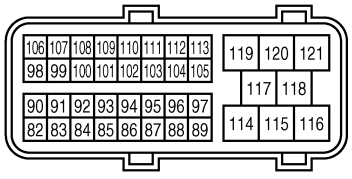

M90
B

E210
W

REFER TO THE FOLLOWING.

E211 -SUPER MULTIPLE JUNCTION (SMJ)

E201 -FUSE BLOCK-JUNCTION BOX (J/B)

TBWM0423E

Specification data are reference values and are measured between each terminal and ground.

CAUTION:
Do not use ECM ground terminals when measuring input/output voltage. Doing so may result in damage to the ECM's transistor. Use a ground other than ECM terminals, such as the ground.

TERMINAL NO.	WIRE COLOR	ITEM	CONDITION	DATA (DC Voltage)
101	P/L	Stop lamp switch	**[Ignition switch: OFF]** ● Brake pedal: Fully released	Approximately 0V
			[Ignition switch: OFF] ● Brake pedal: Slightly depressed	BATTERY VOLTAGE (11 - 14V)

Diagnostic Procedure

ABS007VM

1. CHECK STOP LAMP SWITCH CIRCUIT

1. Turn ignition switch OFF.
2. Check the stop lamp when depressing and releasing the brake pedal.

Brake pedal	Stop lamp
Fully released	Not illuminated
Slightly depressed	Illuminated

OK or NG

OK >> GO TO 4.
NG >> GO TO 2.

2. CHECK STOP LAMP SWITCH POWER SUPPLY CIRCUIT

1. Disconnect stop lamp switch harness connector.

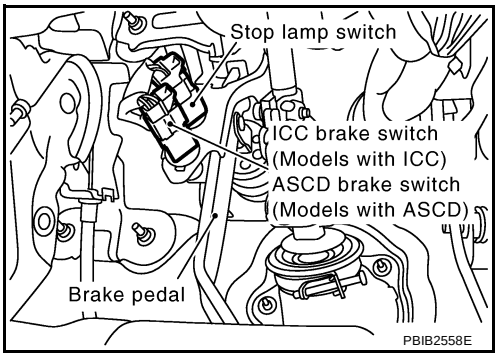

2. Check voltage between stop lamp switch terminal 1 and ground with CONSULT-II or tester.

Voltage: Battery voltage

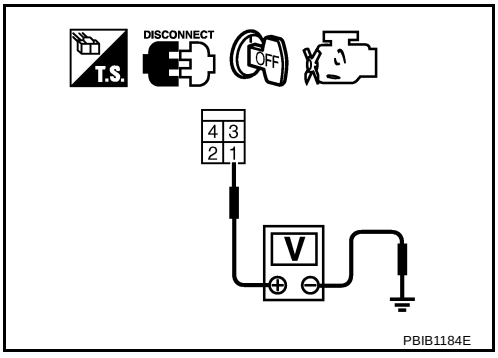

OK or NG

OK >> GO TO 4.
NG >> GO TO 3.

3. DETECT MALFUNCTIONING PART

Check the following.

- 10A fuse
- Fuse block (J/B) connector E201
- Harness for open and short between stop lamp switch and battery

>> Repair open circuit or short to ground or short to power in harness or connectors.

4. CHECK STOP LAMP SWITCH INPUT SIGNAL CIRCUIT FOR OPEN AND SHORT

1. Disconnect ECM harness connector.
2. Disconnect stop lamp switch harness connector.
3. Check harness continuity between ECM terminal 101 and stop lamp switch terminal 2.
   Refer to Wiring Diagram.

   Continuity should exist.

4. Also check harness for short to ground and short to power.

OK or NG

OK >> GO TO 6.
NG >> GO TO 5.

5. DETECT MALFUNCTIONING PART

Check the following.

- Harness connectors E211, M41
- Harness for open or short between ECM and stop lamp switch

>> Repair open circuit or short to ground or short to power in harness or connectors.

6. CHECK STOP LAMP SWITCH

Refer to EC-1301, "Component Inspection" .

OK or NG

OK >> GO TO 7.
NG >> Replace stop lamp switch.

7. CHECK INTERMITTENT INCIDENT

Refer to EC-854, "TROUBLE DIAGNOSIS FOR INTERMITTENT INCIDENT" .

>> **INSPECTION END**

Component Inspection

ABS007VN

STOP LAMP SWITCH

1. Turn ignition switch OFF.
2. Disconnect stop lamp switch harness connector.
3. Check continuity between stop lamp switch terminals 1 and 2 under the following conditions.

Conditions	Continuity
Brake pedal fully released	Should not exist.
Brake pedal slightly depressed	Should exist.

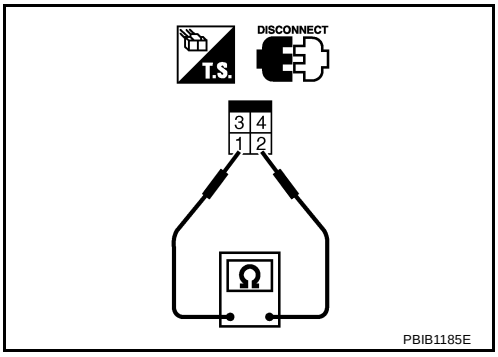

4. If NG, adjust stop lamp switch installation, refer to BR-6, "BRAKE PEDAL" , and perform step 3 again.

DTC P2122, P2123 APP SENSOR

PFP:18002

Component Description

ABS007VO

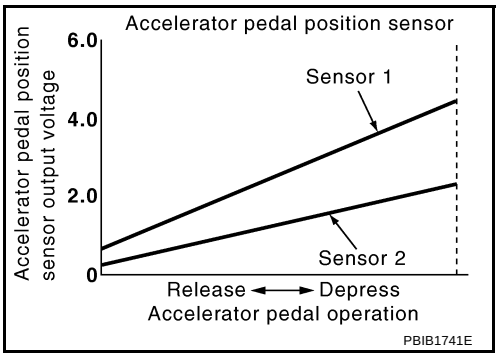

The accelerator pedal position sensor is installed on the upper end of the accelerator pedal assembly. The sensor detects the accelerator position and sends a signal to the ECM.
Accelerator pedal position sensor has two sensors. These sensors are a kind of potentiometers which transform the accelerator pedal position into output voltage, and emit the voltage signal to the ECM. In addition, these sensors detect the opening and closing speed of the accelerator pedal and feed the voltage signals to the ECM. The ECM judges the current opening angle of the accelerator pedal from these signals and controls the throttle control motor based on these signals.
Idle position of the accelerator pedal is determined by the ECM receiving the signal from the accelerator pedal position sensor. The ECM uses this signal for the engine operation such as fuel cut.

CONSULT-II Reference Value in Data Monitor Mode

ABS007VP

Specification data are reference values.

MONITOR ITEM	CONDITION		SPECIFICATION
ACCEL SEN 1	● Ignition switch: ON (Engine stopped)	Accelerator pedal: Fully released	0.5 - 1.0V
		Accelerator pedal: Fully depressed	4.0 - 4.8V
ACCEL SEN 2*	● Ignition switch: ON (Engine stopped)	Accelerator pedal: Fully released	0.3 - 1.2V
		Accelerator pedal: Fully depressed	3.9 - 4.8V
CLSD THL POS	● Ignition switch: ON (Engine stopped)	Accelerator pedal: Fully released	ON
		Accelerator pedal: Slightly depressed	OFF

*: Accelerator pedal position sensor 2 signal is converted by ECM internally. Thus, it differs from ECM terminal voltage.

On Board Diagnosis Logic

ABS007VQ

These self-diagnoses have the one trip detection logic.

NOTE:
If DTC P2122 or P2123 is displayed with DTC P1229, first perform the trouble diagnosis for DTC P1229. Refer to EC-1229 .

DTC No.	Trouble diagnosis name	DTC detecting condition	Possible cause
P2122 2122	Accelerator pedal position sensor 1 circuit low input	An excessively low voltage from the APP sensor 1 is sent to ECM.	● Harness or connectors (APP sensor 1 circuit is open or shorted.) ● Accelerator pedal position sensor (APP sensor 1)
P2123 2123	Accelerator pedal position sensor 1 circuit high input	An excessively high voltage from the APP sensor 1 is sent to ECM.	

FAIL-SAFE MODE

When the malfunction is detected, ECM enters fail-safe mode and the MIL lights up.

Engine operating condition in fail-safe mode
The ECM controls the electric throttle control actuator in regulating the throttle opening in order for the idle position to be within +10 degrees. The ECM regulates the opening speed of the throttle valve to be slower than the normal condition. So, the acceleration will be poor.

DTC Confirmation Procedure

ABS007VR

NOTE:
If DTC Confirmation Procedure has been previously conducted, always turn ignition switch OFF and wait at least 10 seconds before conducting the next test.
TESTING CONDITION:
Before performing the following procedure, confirm that battery voltage is more than 10V at idle.

WITH CONSULT-II

1. Turn ignition switch ON.
2. Select “DATA MONITOR” mode with CONSULT-II.
3. Start engine and let it idle for 1 second.
4. If DTC is detected, go to EC-1305, "Diagnostic Procedure" .

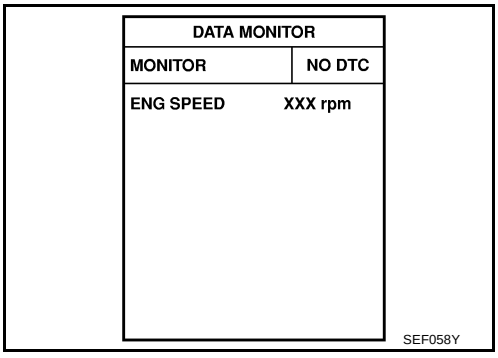

WITH GST

Follow the procedure “WITH CONSULT-II” above.

Wiring Diagram

ABS007VS

EC-APPS1-01

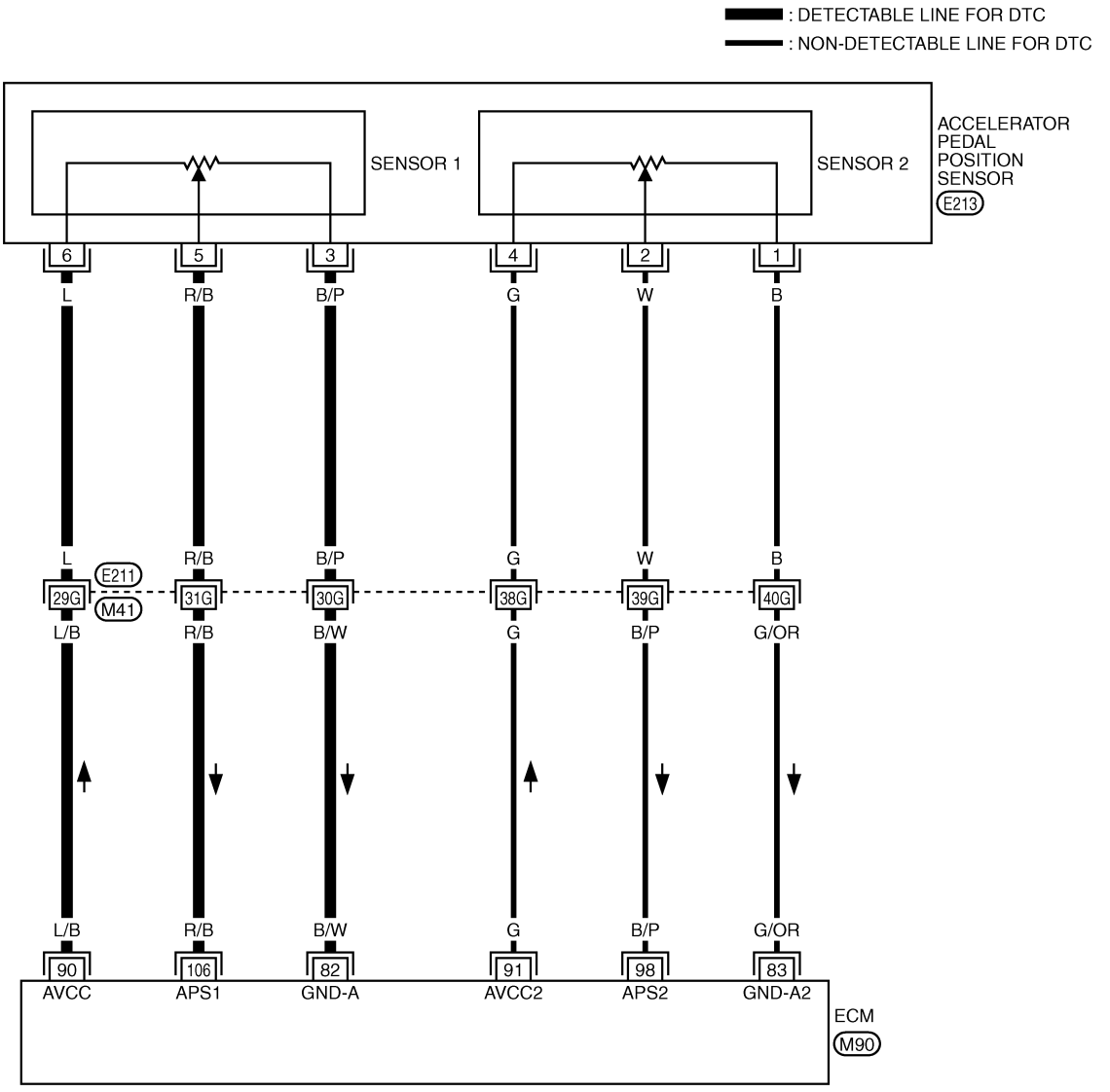

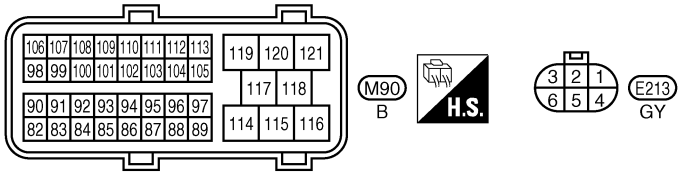

REFER TO THE FOLLOWING.
E211 -SUPER MULTIPLE JUNCTION (SMJ)

TBWM0239E

Specification data are reference values and are measured between each terminal and ground.

CAUTION:
Do not use ECM ground terminals when measuring input/output voltage. Doing so may result in damage to the ECM's transistor. Use a ground other than ECM terminals, such as the ground.

TERMINAL NO.	WIRE COLOR	ITEM	CONDITION	DATA (DC Voltage)
82	B/W	Sensor ground (APP sensor 1)	**[Engine is running]** ● **Warm-up condition** ● Idle speed	Approximately 0V
83	G/OR	Sensor ground (APP sensor 2)	**[Engine is running]** ● **Warm-up condition** ● Idle speed	Approximately 0V
90	L/B	Sensor power supply (APP sensor 1)	**[Ignition switch: ON]**	Approximately 5V
91	G	Sensor power supply (APP sensor 2)	**[Ignition switch: ON]**	Approximately 5V
98	B/P	Accelerator pedal position sensor 2	**[Ignition switch: ON]** ● Engine stopped ● Accelerator pedal: Fully released	0.15 - 0.60V
			[Ignition switch: ON] ● Engine stopped ● Accelerator pedal: Fully depressed	1.95 - 2.40V
106	R/B	Accelerator pedal position sensor 1	**[Ignition switch: ON]** ● Engine stopped ● Accelerator pedal: Fully released	0.5 - 1.0V
			[Ignition switch: ON] ● Engine stopped ● Accelerator pedal: Fully depressed	3.9 - 4.7V

Diagnostic Procedure

ABS007VT

1. CHECK GROUND CONNECTIONS

1. Turn ignition switch OFF.
2. Loosen and retighten three ground screws on the body.
   Refer to EC-861, "Ground Inspection" .

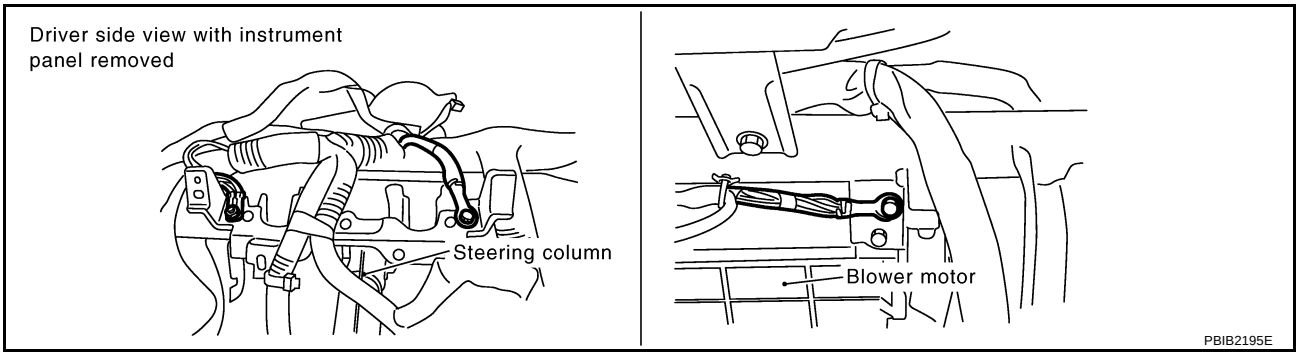

OK or NG

OK >> GO TO 2.
NG >> Repair or replace ground connections.

2. CHECK APP SENSOR 1 POWER SUPPLY CIRCUIT

1. Disconnect accelerator pedal position (APP) sensor harness connector.
2. Turn ignition switch ON.

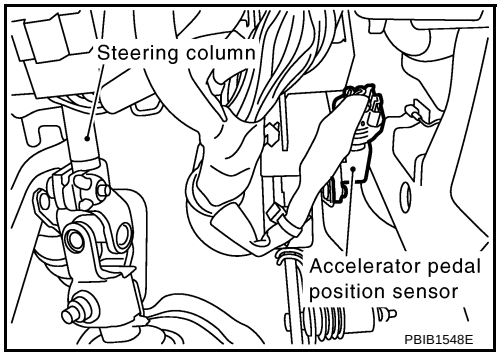

3. Check voltage between APP sensor terminal 6 and ground with CONSULT-II or tester.

Voltage: Approximately 5V

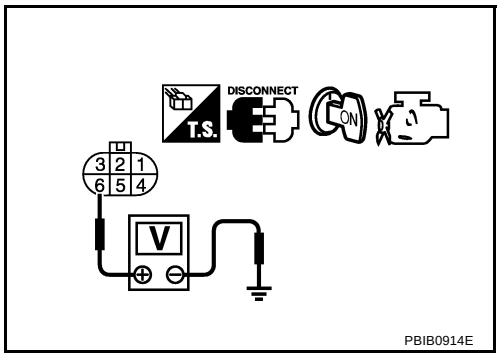

OK or NG

OK >> GO TO 4.
NG >> GO TO 3.

3. DETECT MALFUNCTIONING PART

Check the following.

- Harness connectors E211, M41
- Harness for open or short between ECM and accelerator pedal position sensor

>> Repair open circuit or short to ground or short to power in harness or connectors.

4. CHECK APP SENSOR 1 GROUND CIRCUIT FOR OPEN AND SHORT

1. Turn ignition switch OFF.
2. Disconnect ECM harness connector.
3. Check harness continuity between APP sensor terminal 3 and ECM terminal 82. Refer to Wiring Diagram.

Continuity should exist.

4. Also check harness for short to ground and short to power.

OK or NG

OK >> GO TO 6.
NG >> GO TO 5.

5. DETECT MALFUNCTIONING PART

Check the following.

- Harness connectors E211, M41
- Harness for open or short between ECM and accelerator pedal position sensor

>> Repair open circuit or short to ground or short to power in harness or connectors.

6. CHECK APP SENSOR INPUT SIGNAL CIRCUIT FOR OPEN AND SHORT

1. Check harness continuity between ECM terminal 106 and APP sensor terminal 5. Refer to Wiring Diagram.

   Continuity should exist.

2. Also check harness for short to ground and short to power.

OK or NG

OK >> GO TO 8.
NG >> GO TO 7.

7. DETECT MALFUNCTIONING PART

Check the following.

- Harness connectors E211, M41
- Harness for open or short between ECM and accelerator pedal position sensor

>> Repair open circuit or short to ground or short to power in harness or connectors.

8. CHECK APP SENSOR

Refer to EC-1330, "Component Inspection" .

OK or NG

OK >> GO TO 10.
NG >> GO TO 9.

9. REPLACE ACCELERATOR PEDAL ASSEMBLY

1. Replace accelerator pedal assembly.
2. Perform EC-786, "Accelerator Pedal Released Position Learning" .
3. Perform EC-786, "Throttle Valve Closed Position Learning" .
4. Perform EC-787, "Idle Air Volume Learning" .

>> **INSPECTION END**

10. CHECK INTERMITTENT INCIDENT

Refer to EC-854, "TROUBLE DIAGNOSIS FOR INTERMITTENT INCIDENT" .

>> **INSPECTION END**

Component Inspection

ABS007VU

ACCELERATOR PEDAL POSITION SENSOR

1. Reconnect all harness connectors disconnected.
2. Turn ignition switch ON.
3. Check voltage between ECM terminals 106 (APP sensor 1 signal), 98 (APP sensor 2 signal) and ground under the following conditions.

Terminal	Accelerator pedal	Voltage
106 (Accelerator pedal position sensor 1)	Fully released	0.5 - 1.0V
	Fully depressed	3.9 - 4.7V
98 (Accelerator pedal position sensor 2)	Fully released	0.15 - 0.60V
	Fully depressed	1.95 - 2.40V

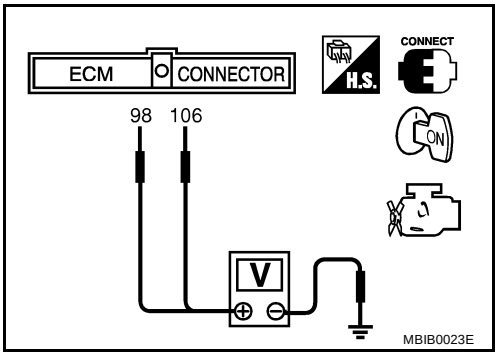

4. If NG, replace accelerator pedal assembly and go to next step.
5. Perform EC-786, "Accelerator Pedal Released Position Learning" .
6. Perform EC-786, "Throttle Valve Closed Position Learning" .
7. Perform EC-787, "Idle Air Volume Learning" .

Removal and Installation

ABS007VV

ACCELERATOR PEDAL

Refer to ACC-3, "ACCELERATOR CONTROL SYSTEM" .

DTC P2127, P2128 APP SENSOR

PFP:18002

Component Description

ABS007VW

The accelerator pedal position sensor is installed on the upper end of the accelerator pedal assembly. The sensor detects the accelerator position and sends a signal to the ECM.
Accelerator pedal position sensor has two sensors. These sensors are a kind of potentiometers which transform the accelerator pedal position into output voltage, and emit the voltage signal to the ECM. In addition, these sensors detect the opening and closing speed of the accelerator pedal and feed the voltage signals to the ECM. The ECM judges the current opening angle of the accelerator pedal from these signals and controls the throttle control motor based on these signals.

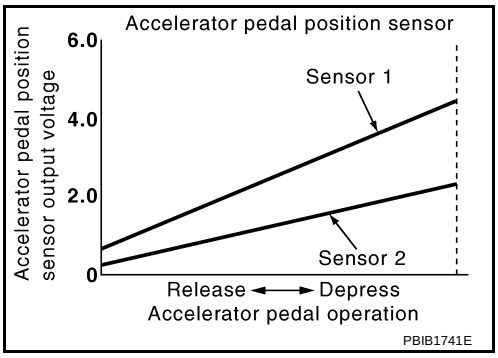

Idle position of the accelerator pedal is determined by the ECM receiving the signal from the accelerator pedal position sensor. The ECM uses this signal for the engine operation such as fuel cut.

CONSULT-II Reference Value in Data Monitor Mode

ABS007VX

Specification data are reference values.

MONITOR ITEM	CONDITION		SPECIFICATION
ACCEL SEN 1	● Ignition switch: ON (Engine stopped)	Accelerator pedal: Fully released	0.5 - 1.0V
		Accelerator pedal: Fully depressed	4.0 - 4.8V
ACCEL SEN 2*	● Ignition switch: ON (Engine stopped)	Accelerator pedal: Fully released	0.3 - 1.2V
		Accelerator pedal: Fully depressed	3.9 - 4.8V
CLSD THL POS	● Ignition switch: ON (Engine stopped)	Accelerator pedal: Fully released	ON
		Accelerator pedal: Slightly depressed	OFF

*: Accelerator pedal position sensor 2 signal is converted by ECM internally. Thus, it differs from ECM terminal voltage.

On Board Diagnosis Logic

ABS007VY

These self-diagnoses have the one trip detection logic.

DTC No.	Trouble diagnosis name	DTC detecting condition	Possible cause
P2127 2127	Accelerator pedal position sensor 2 circuit low input	An excessively low voltage from the APP sensor 2 is sent to ECM.	● Harness or connectors (APP sensor 2 circuit is open or shorted.) (TP sensor circuit is shorted.) ● Accelerator pedal position sensor (APP sensor 2) ● Electric throttle control actuator (TP sensor 1 and 2)
P2128 2128	Accelerator pedal position sensor 2 circuit high input	An excessively high voltage from the APP sensor 2 is sent to ECM.	

FAIL-SAFE MODE

When the malfunction is detected, ECM enters fail-safe mode and the MIL lights up.

Engine operating condition in fail-safe mode
The ECM controls the electric throttle control actuator in regulating the throttle opening in order for the idle position to be within +10 degrees. The ECM regulates the opening speed of the throttle valve to be slower than the normal condition. So, the acceleration will be poor.

DTC Confirmation Procedure

ABS007VZ

NOTE:
If DTC Confirmation Procedure has been previously conducted, always turn ignition switch OFF and wait at least 10 seconds before conducting the next test.
TESTING CONDITION:
Before performing the following procedure, confirm that battery voltage is more than 10V at idle.

WITH CONSULT-II

1. Turn ignition switch ON.
2. Select “DATA MONITOR” mode with CONSULT-II.
3. Start engine and let it idle for 1 second.
4. If DTC is detected, go to EC-1312, "Diagnostic Procedure" .

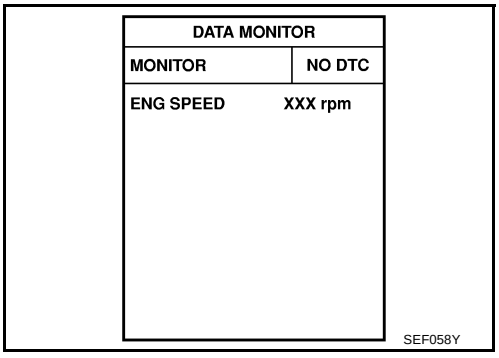

WITH GST

Follow the procedure “WITH CONSULT-II” above.

Wiring Diagram

ABS007W0

EC-APPS2-01

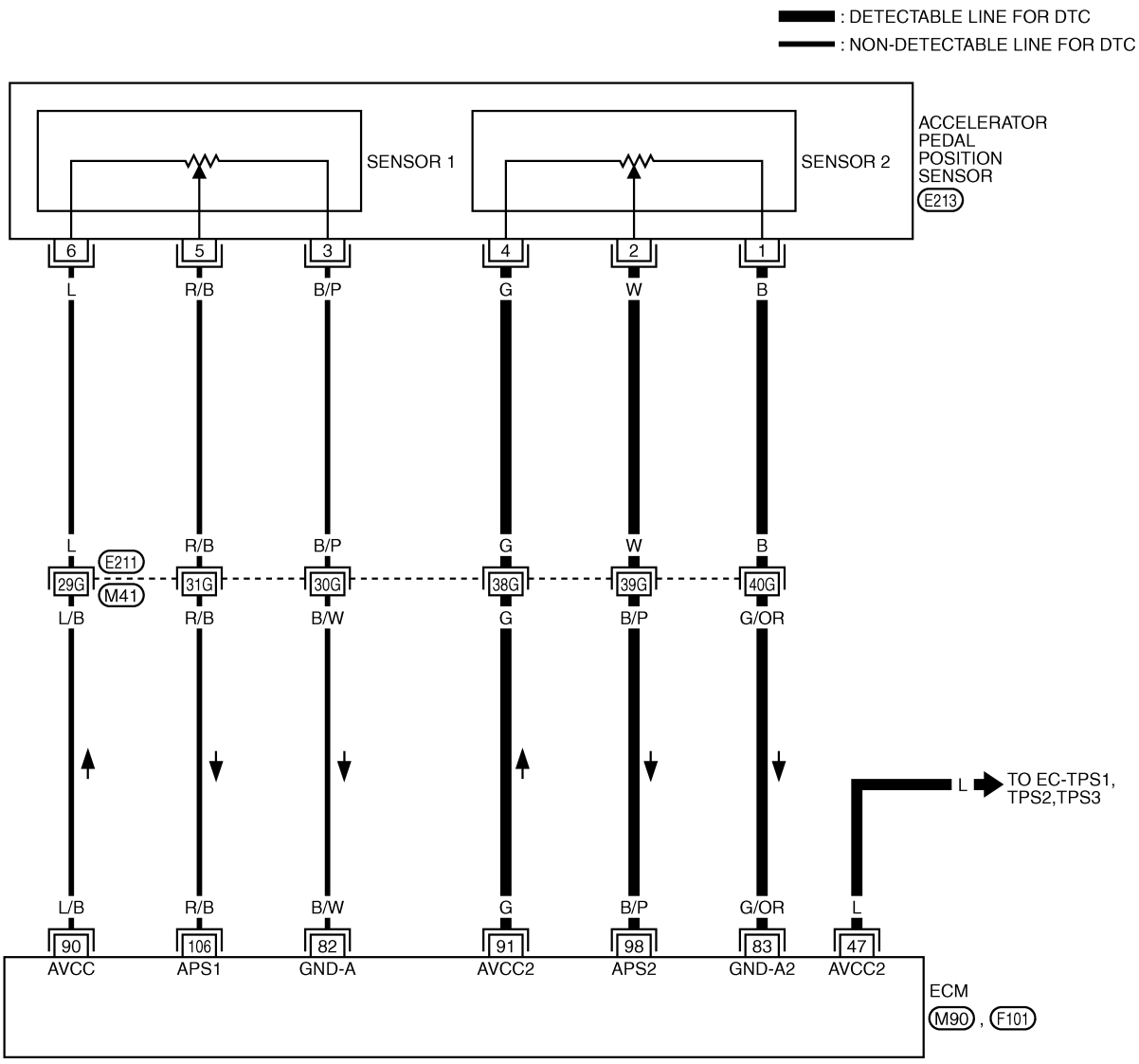

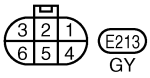

REFER TO THE FOLLOWING.
E211 -SUPER MULTIPLE JUNCTION (SMJ)

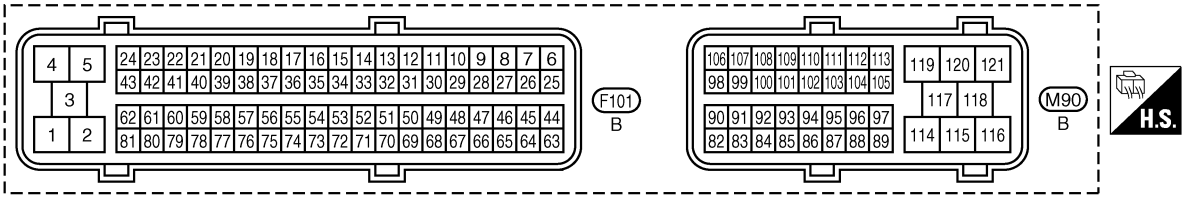

TBWM0508E

Specification data are reference values and are measured between each terminal and ground.

CAUTION:

Do not use ECM ground terminals when measuring input/output voltage. Doing so may result in damage to the ECM's transistor. Use a ground other than ECM terminals, such as the ground.

TERMINAL NO.	WIRE COLOR	ITEM	CONDITION	DATA (DC Voltage)
47	L	Sensor power supply (Throttle position sensor)	**[Ignition switch: ON]**	Approximately 5V
82	B/W	Sensor ground (APP sensor 1)	**[Engine is running]** ● **Warm-up condition** ● Idle speed	Approximately 0V
83	G/OR	Sensor ground (APP sensor 2)	**[Engine is running]** ● **Warm-up condition** ● Idle speed	Approximately 0V
90	L/B	Sensor power supply (APP sensor 1)	**[Ignition switch: ON]**	Approximately 5V
91	G	Sensor power supply (APP sensor 2)	**[Ignition switch: ON]**	Approximately 5V
98	B/P	Accelerator pedal position sensor 2	**[Ignition switch: ON]** ● Engine stopped ● Accelerator pedal: Fully released	0.15 - 0.60V
			[Ignition switch: ON] ● Engine stopped ● Accelerator pedal: Fully depressed	1.95 - 2.40V
106	R/B	Accelerator pedal position sensor 1	**[Ignition switch: ON]** ● Engine stopped ● Accelerator pedal: Fully released	0.5 - 1.0V
			[Ignition switch: ON] ● Engine stopped ● Accelerator pedal: Fully depressed	3.9 - 4.7V

Diagnostic Procedure

ABS007W1

1. CHECK GROUND CONNECTIONS

1. Turn ignition switch OFF.
2. Loosen and retighten three ground screws on the body.
   Refer to EC-861, "Ground Inspection" .

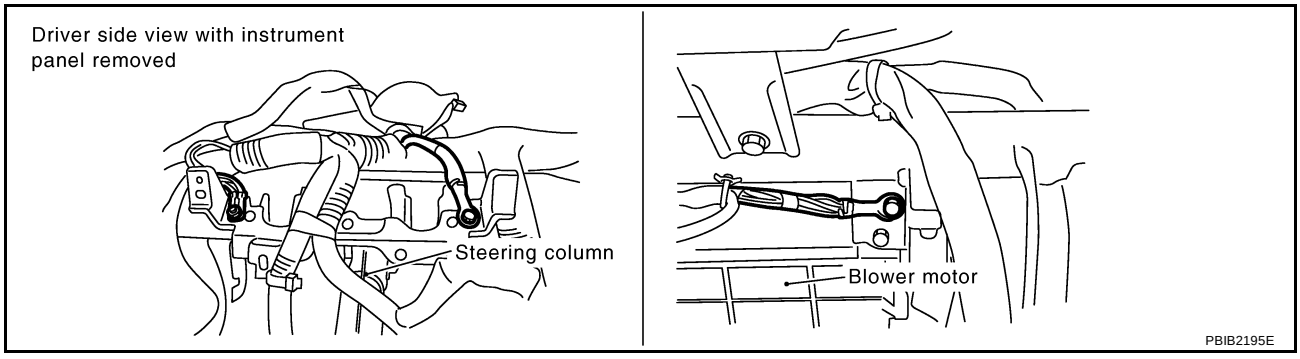

OK or NG

OK >> GO TO 2.
NG >> Repair or replace ground connections.

2. CHECK APP SENSOR 2 POWER SUPPLY CIRCUIT-I

1. Disconnect accelerator pedal position (APP) sensor harness connector.
2. Turn ignition switch ON.

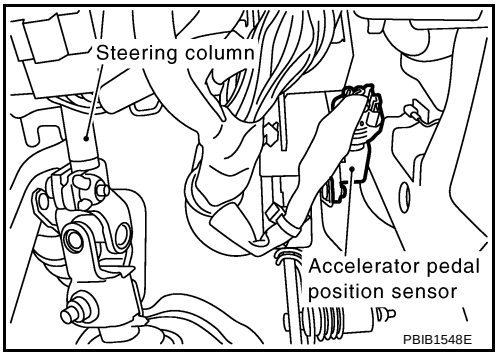

3. Check voltage between APP sensor terminal 4 and ground with CONSULT-II or tester.

Voltage: Approximately 5V

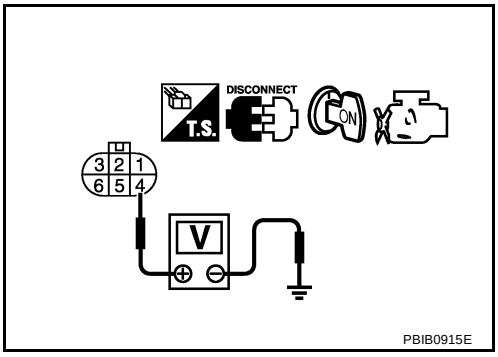

OK or NG

OK >> GO TO 8.
NG >> GO TO 3.

3. CHECK APP SENSOR 2 POWER SUPPLY CIRCUIT-II

1. Turn ignition switch OFF.
2. Disconnect ECM harness connector.
3. Check harness continuity between APP sensor terminal 4 and ECM terminal 91. Refer to Wiring Diagram.

Continuity should exist.

OK or NG

OK >> GO TO 5.
NG >> GO TO 4.

4. DETECT MALFUNCTIONING PART

Check the following.

- Harness connectors E211, M41
- Harness for open or short between ECM and accelerator pedal position sensor

>> Repair open circuit.

5. CHECK APP SENSOR 2 POWER SUPPLY CIRCUIT-III

Check harness for short to power and short to ground, between the following terminals.

ECM terminal	Sensor terminal	Reference Wiring Diagram
91	APP sensor terminal 4	EC-1311
47	Electric throttle control actuator terminal 1	EC-922

OK or NG

OK >> GO TO 6.
NG >> Repair short to ground or short to power in harness or connectors.

6. CHECK THROTTLE POSITION SENSOR

Refer to EC-926, "Component Inspection" .

OK or NG

OK >> GO TO 14.
NG >> GO TO 7.

7. REPLACE ELECTRIC THROTTLE CONTROL ACTUATOR

1. Replace the electric throttle control actuator.
2. Perform EC-786, "Throttle Valve Closed Position Learning" .
3. Perform EC-787, "Idle Air Volume Learning" .

>> **INSPECTION END**

8. CHECK APP SENSOR 2 GROUND CIRCUIT FOR OPEN AND SHORT

1. Turn ignition switch OFF.
2. Disconnect ECM harness connector.
3. Check harness continuity between APP sensor terminal 1 and ECM terminal 83.
   Refer to Wiring Diagram.

   Continuity should exist.

4. Also check harness for short to ground and short to power.

OK or NG

OK >> GO TO 10.
NG >> GO TO 9.

9. DETECT MALFUNCTIONING PART

Check the following.

- Harness connectors E211, M41
- Harness for open or short between ECM and accelerator pedal position sensor

>> Repair open circuit or short to ground or short to power in harness or connectors.

10. CHECK APP SENSOR 2 INPUT SIGNAL CIRCUIT FOR OPEN AND SHORT

1. Check harness continuity between ECM terminal 98 and APP sensor terminal 2.
   Refer to Wiring Diagram.

   Continuity should exist.

2. Also check harness for short to ground and short to power.

OK or NG

OK >> GO TO 12.
NG >> GO TO 11.

11. DETECT MALFUNCTIONING PART

Check the following.

- Harness connectors E211, M41
- Harness for open or short between ECM and accelerator pedal position sensor

>> Repair open circuit or short to ground or short to power in harness or connectors.

12. CHECK APP SENSOR

Refer to EC-1330, "Component Inspection" .

OK or NG

OK >> GO TO 14.
NG >> GO TO 13.

13. REPLACE ACCELERATOR PEDAL ASSEMBLY

1. Replace accelerator pedal assembly.
2. Perform EC-786, "Accelerator Pedal Released Position Learning" .
3. Perform EC-786, "Throttle Valve Closed Position Learning" .
4. Perform EC-787, "Idle Air Volume Learning" .

>> **INSPECTION END**

14. CHECK INTERMITTENT INCIDENT

Refer to EC-854, "TROUBLE DIAGNOSIS FOR INTERMITTENT INCIDENT" .

>> **INSPECTION END**

Component Inspection

ABS007W2

ACCELERATOR PEDAL POSITION SENSOR

1. Reconnect all harness connectors disconnected.
2. Turn ignition switch ON.
3. Check voltage between ECM terminals 106 (APP sensor 1 signal), 98 (APP sensor 2 signal) and ground under the following conditions.

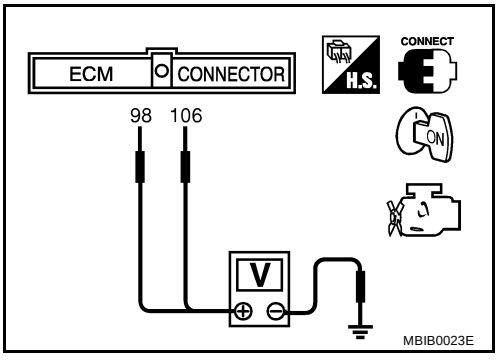

Terminal	Accelerator pedal	Voltage
106 (Accelerator pedal position sensor 1)	Fully released	0.5 - 1.0V
	Fully depressed	3.9 - 4.7V
98 (Accelerator pedal position sensor 2)	Fully released	0.15 - 0.60V
	Fully depressed	1.95 - 2.40V

4. If NG, replace accelerator pedal assembly and go to next step.
5. Perform EC-786, "Accelerator Pedal Released Position Learning" .
6. Perform EC-786, "Throttle Valve Closed Position Learning" .
7. Perform EC-787, "Idle Air Volume Learning" .

Removal and Installation

ABS007W3

ACCELERATOR PEDAL

Refer to ACC-3, "ACCELERATOR CONTROL SYSTEM" .

DTC P2135 TP SENSOR

PFP:16119

Component Description

ABS007W4

Electric throttle control actuator consists of throttle control motor, throttle position sensor, etc. The throttle position sensor responds to the throttle valve movement.
The throttle position sensor has the two sensors. These sensors are a kind of potentiometers which transform the throttle valve position into output voltage, and emit the voltage signal to the ECM. In addition, these sensors detect the opening and closing speed of the throttle valve and feed the voltage signals to the ECM. The ECM judges the current opening angle of the throttle valve from these signals and the ECM controls the throttle control motor to make the throttle valve opening angle properly in response to driving condition.

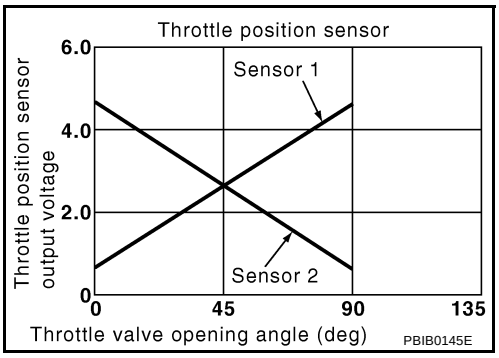

CONSULT-II Reference Value in Data Monitor Mode

ABS007W5

Specification data are reference values.

MONITOR ITEM	CONDITION		SPECIFICATION
THRTL SEN 1 THRTL SEN 2*	● Ignition switch: ON (Engine stopped) ● Selector lever: D	Accelerator pedal: Fully released	More than 0.36V
		Accelerator pedal: Fully depressed	Less than 4.75V

*: Throttle position sensor 2 signal is converted by ECM internally. Thus, it differs from ECM terminal voltage signal.

On Board Diagnosis Logic

ABS007W6

This self-diagnosis has the one trip detection logic.

DTC No.	Trouble diagnosis name	DTC detecting condition	Possible cause
P2135 2135	Throttle position sensor circuit range/performance problem	Rationally incorrect voltage is sent to ECM compared with the signals from TP sensor 1 and TP sensor 2.	● Harness or connector (TP sensor 1 and 2 circuit is open or shorted.) (APP sensor 2 circuit is shorted.) ● Electric throttle control actuator (TP sensor 1 and 2) ● Accelerator pedal position sensor (APP sensor 2)

FAIL-SAFE MODE

When the malfunction is detected, ECM enters fail-safe mode and the MIL lights up.

Engine operation condition in fail-safe mode
The ECM controls the electric throttle control actuator in regulating the throttle opening in order for the idle position to be within +10 degrees. The ECM regulates the opening speed of the throttle valve to be slower than the normal condition. So, the acceleration will be poor.

DTC Confirmation Procedure

ABS007W7

NOTE:
If DTC Confirmation Procedure has been previously conducted, always turn ignition switch OFF and wait at least 10 seconds before conducting the next test.
TESTING CONDITION:
Before performing the following procedure, confirm that battery voltage is more than 10V at idle.

WITH CONSULT-II

1. Turn ignition switch ON.
2. Select “DATA MONITOR” mode with CONSULT-II.
3. Start engine and let it idle for 1 second.
4. If DTC is detected, go to EC-1319, "Diagnostic Procedure" .

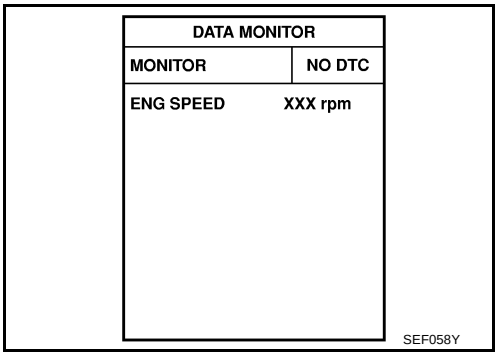

WITH GST

Follow the procedure “WITH CONSULT-II” above.

Wiring Diagram

ABS007W8

EC-TPS3-01

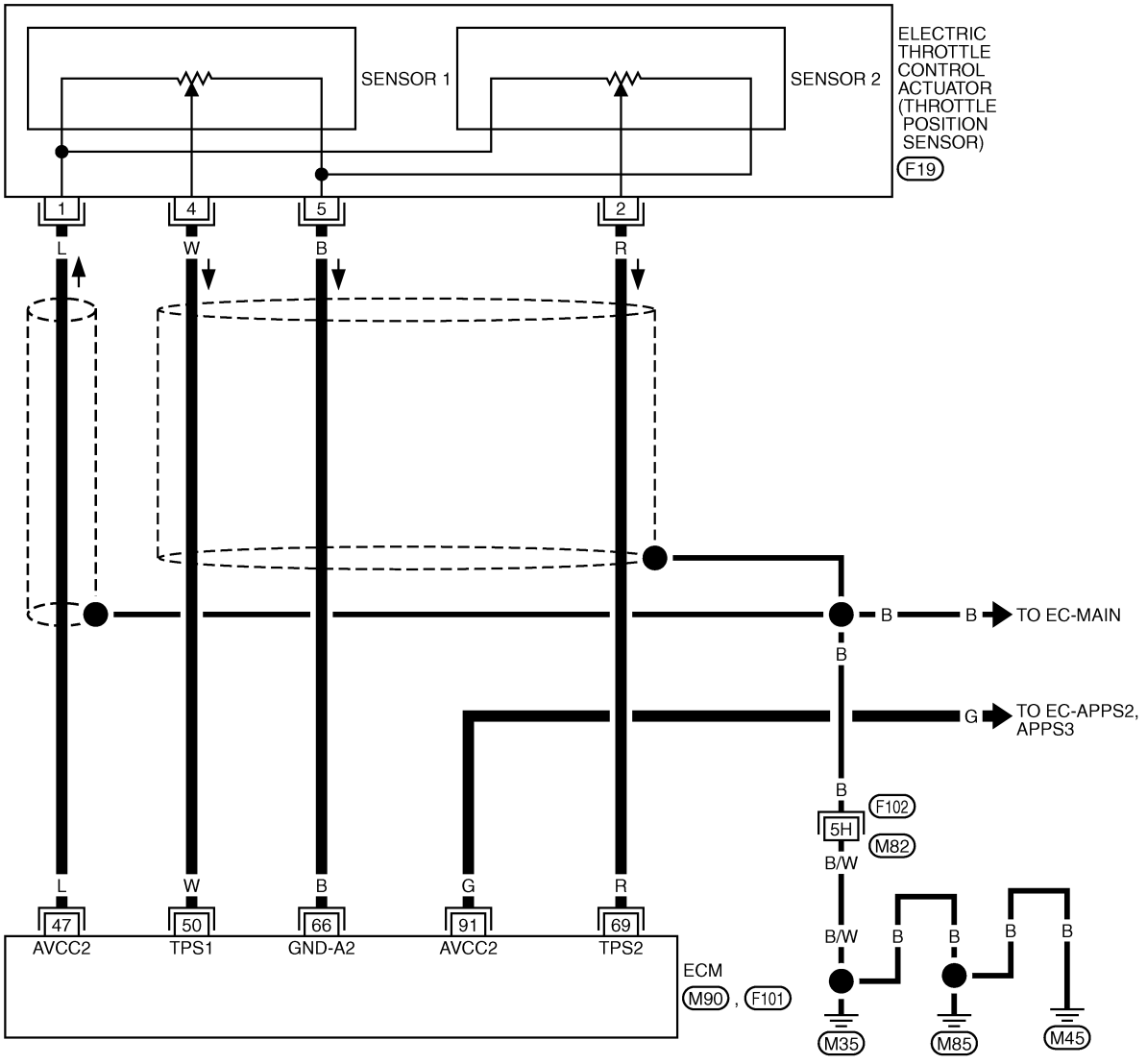

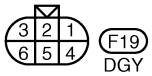

REFER TO THE FOLLOWING.
F102 -SUPER MULTIPLE JUNCTION (SMJ)

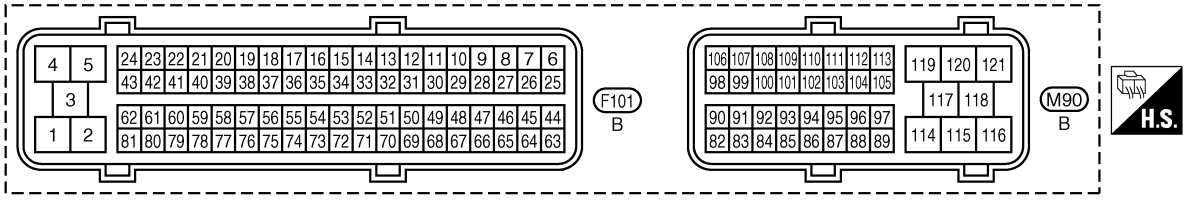

TBWM0424E

Specification data are reference values and are measured between each terminal and ground.

CAUTION:
Do not use ECM ground terminals when measuring input/output voltage. Doing so may result in damage to the ECM's transistor. Use a ground other than ECM terminals, such as the ground.

TERMINAL NO.	WIRE COLOR	ITEM	CONDITION	DATA (DC Voltage)
47	L	Sensor power supply (Throttle position sensor)	**[Ignition switch: ON]**	Approximately 5V
50	W	Throttle position sensor 1	**[Ignition switch: ON]** ● Engine stopped ● Selector lever: D ● Accelerator pedal: Fully released	More than 0.36V
			[Ignition switch: ON] ● Engine stopped ● Selector lever: D ● Accelerator pedal: Fully depressed	Less than 4.75V
66	B	Sensor ground (Throttle position sensor)	**[Engine is running]** ● **Warm-up condition** ● Idle speed	Approximately 0V
69	R	Throttle position sensor 2	**[Ignition switch: ON]** ● Engine stopped ● Selector lever: D ● Accelerator pedal: Fully released	Less than 4.75V
			[Ignition switch: ON] ● Engine stopped ● Selector lever: D ● Accelerator pedal: Fully depressed	More than 0.36V
91	G	Sensor power supply (APP sensor 2)	**[Ignition switch: ON]**	Approximately 5V

Diagnostic Procedure

ABS007W9

1. CHECK GROUND CONNECTIONS

1. Turn ignition switch OFF.
2. Loosen and retighten three ground screws on the body.
   Refer to EC-861, "Ground Inspection" .

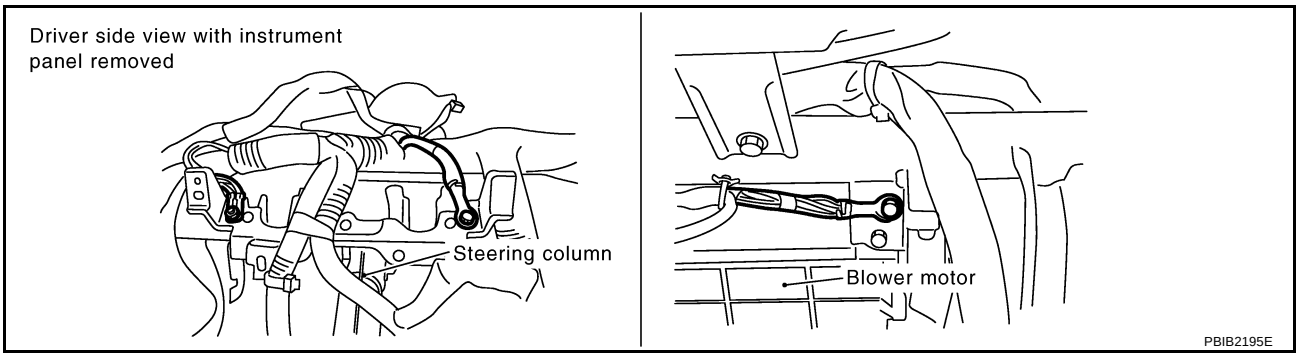

OK or NG

OK >> GO TO 2.
NG >> Repair or replace ground connections.

2. CHECK THROTTLE POSITION SENSOR POWER SUPPLY CIRCUIT-I

1. Disconnect electric throttle control actuator harness connector.
2. Turn ignition switch ON.

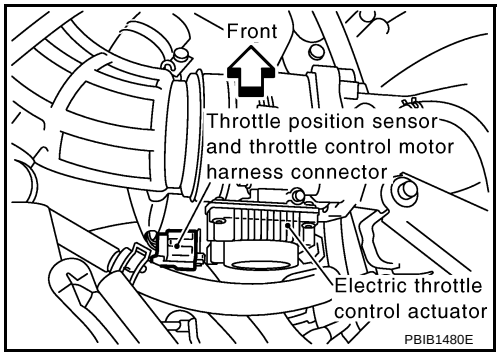

3. Check voltage between electric throttle control actuator terminal 1 and ground with CONSULT-II or tester.

Voltage: Approximately 5V

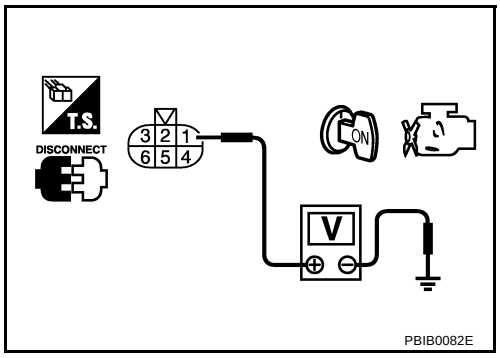

OK or NG

OK >> GO TO 7.
NG >> GO TO 3.

3. CHECK THROTTLE POSITION SENSOR POWER SUPPLY CIRCUIT-II

1. Turn ignition switch OFF.
2. Disconnect ECM harness connector.
3. Check harness continuity between electric throttle control actuator terminal 1 and ECM terminal 47. Refer to Wiring Diagram.

Continuity should exist.

OK or NG

OK >> GO TO 4.
NG >> Repair open circuit.

4. CHECK THROTTLE POSITION SENSOR POWER SUPPLY CIRCUIT-III

Check harness for short to power and short to ground, between the following terminals.

ECM terminal	Sensor terminal	Reference Wiring Diagram
47	Electric throttle control actuator terminal 1	EC-1318
91	APP sensor terminal 4	EC-1311

OK or NG

OK >> GO TO 5.
NG >> Repair short to ground or short to power in harness or connectors.

5. CHECK APP SENSOR

Refer to EC-1315, "Component Inspection" .

OK or NG

OK >> GO TO 11.
NG >> GO TO 6.

6. REPLACE ACCELERATOR PEDAL ASSEMBLY

1. Replace accelerator pedal assembly.
2. Perform EC-786, "Accelerator Pedal Released Position Learning" .
3. Perform EC-786, "Throttle Valve Closed Position Learning" .
4. Perform EC-787, "Idle Air Volume Learning" .

>> **INSPECTION END**

7. CHECK THROTTLE POSITION SENSOR GROUND CIRCUIT FOR OPEN AND SHORT

1. Turn ignition switch OFF.
2. Disconnect ECM harness connector.
3. Check harness continuity between electric throttle control actuator terminal 5 and ECM terminal 66.
   Refer to Wiring Diagram.

   Continuity should exist.

4. Also check harness for short to ground and short to power.

OK or NG

OK >> GO TO 8.
NG >> Repair open circuit or short to ground or short to power in harness or connectors.

8. CHECK THROTTLE POSITION SENSOR INPUT SIGNAL CIRCUIT FOR OPEN AND SHORT

1. Check harness continuity between ECM terminal 50 and electric throttle control actuator terminal 4, ECM terminal 69 and electric throttle control actuator terminal 2.
   Refer to Wiring Diagram.

   Continuity should exist.

2. Also check harness for short to ground and short to power.

OK or NG

OK >> GO TO 9.
NG >> Repair open circuit or short to ground or short to power in harness or connectors.

9. CHECK THROTTLE POSITION SENSOR

Refer to EC-1322, "Component Inspection" .

OK or NG

OK >> GO TO 11.
NG >> GO TO 10.

10. REPLACE ELECTRIC THROTTLE CONTROL ACTUATOR

1. Replace the electric throttle control actuator.
2. Perform EC-786, "Throttle Valve Closed Position Learning" .
3. Perform EC-787, "Idle Air Volume Learning" .

>> **INSPECTION END**

11. CHECK INTERMITTENT INCIDENT

Refer to EC-854, "TROUBLE DIAGNOSIS FOR INTERMITTENT INCIDENT" .

>> **INSPECTION END**

Component Inspection

ABS007WA

THROTTLE POSITION SENSOR

1. Reconnect all harness connectors disconnected.
2. Perform EC-786, "Throttle Valve Closed Position Learning" .
3. Turn ignition switch ON.
4. Set selector lever to D position.
5. Check voltage between ECM terminals 50 (TP sensor 1 signal), 69 (TP sensor 2 signal) and ground under the following conditions.

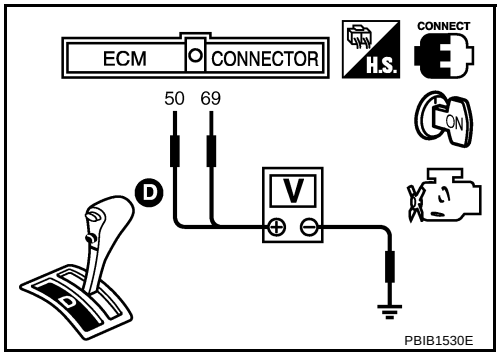

Terminal	Accelerator pedal	Voltage
50 (Throttle position sensor 1)	Fully released	More than 0.36V
	Fully depressed	Less than 4.75V
69 (Throttle position sensor 2)	Fully released	Less than 4.75V
	Fully depressed	More than 0.36V

6. If NG, replace electric throttle control actuator and go to the next step.
7. Perform EC-786, "Throttle Valve Closed Position Learning" .
8. Perform EC-787, "Idle Air Volume Learning" .

Removal and Installation

ABS007WB

ELECTRIC THROTTLE CONTROL ACTUATOR

Refer to EM-178, "INTAKE MANIFOLD" .

DTC P2138 APP SENSOR

PFP:18002

Component Description

ABS007WC

The accelerator pedal position sensor is installed on the upper end of the accelerator pedal assembly. The sensor detects the accelerator position and sends a signal to the ECM.
Accelerator pedal position sensor has two sensors. These sensors are a kind of potentiometers which transform the accelerator pedal position into output voltage, and emit the voltage signal to the ECM. In addition, these sensors detect the opening and closing speed of the accelerator pedal and feed the voltage signals to the ECM. The ECM judges the current opening angle of the accelerator pedal from these signals and controls the throttle control motor based on these signals.

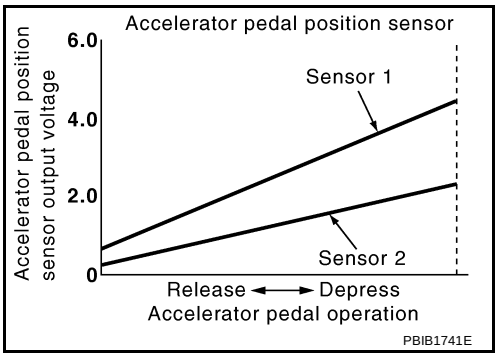

Idle position of the accelerator pedal is determined by the ECM receiving the signal from the accelerator pedal position sensor. The ECM uses this signal for the engine operation such as fuel cut.

CONSULT-II Reference Value in Data Monitor Mode

ABS007WD

Specification data are reference values.

MONITOR ITEM	CONDITION		SPECIFICATION
ACCEL SEN 1	● Ignition switch: ON (Engine stopped)	Accelerator pedal: Fully released	0.5 - 1.0V
		Accelerator pedal: Fully depressed	4.0 - 4.8V
ACCEL SEN 2*	● Ignition switch: ON (Engine stopped)	Accelerator pedal: Fully released	0.3 - 1.2V
		Accelerator pedal: Fully depressed	3.9 - 4.8V
CLSD THL POS	● Ignition switch: ON (Engine stopped)	Accelerator pedal: Fully released	ON
		Accelerator pedal: Slightly depressed	OFF

*: Accelerator pedal position sensor 2 signal is converted by ECM internally. Thus, it differs from ECM terminal voltage.

On Board Diagnosis Logic

ABS007WE

This self-diagnosis has the one trip detection logic.

NOTE:
If DTC P2138 is displayed with DTC P1229, first perform the trouble diagnosis for DTC P1229. Refer to EC-1229 .

DTC No.	Trouble diagnosis name	DTC detecting condition	Possible cause
P2138 2138	Accelerator pedal position sensor circuit range/performance problem	Rationally incorrect voltage is sent to ECM compared with the signals from APP sensor 1 and APP sensor 2.	● Harness or connector (APP sensor 1 and 2 circuit is open or shorted.) (TP sensor circuit is shorted.) ● Accelerator pedal position sensor (APP sensor 1 and 2) ● Electric throttle control actuator (TP sensor 1 and 2)

FAIL-SAFE MODE

When the malfunction is detected, ECM enters fail-safe mode and the MIL lights up.

Engine operating condition in fail-safe mode
The ECM controls the electric throttle control actuator in regulating the throttle opening in order for the idle position to be within +10 degrees. The ECM regulates the opening speed of the throttle valve to be slower than the normal condition. So, the acceleration will be poor.

DTC Confirmation Procedure

ABS007WF

NOTE:
If DTC Confirmation Procedure has been previously conducted, always turn ignition switch OFF and wait at least 10 seconds before conducting the next test.
TESTING CONDITION:
Before performing the following procedure, confirm that battery voltage is more than 10V at idle.

WITH CONSULT-II

1. Turn ignition switch ON.
2. Select “DATA MONITOR” mode with CONSULT-II.
3. Start engine and let it idle for 1 second.
4. If DTC is detected, go to EC-1326, "Diagnostic Procedure" .

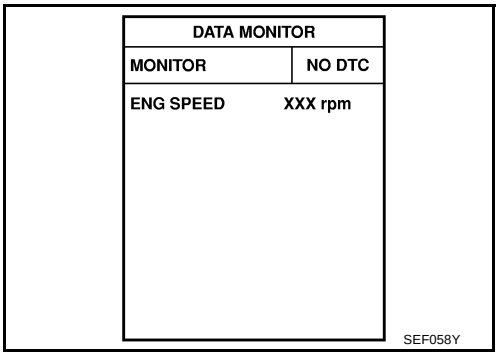

WITH GST

Follow the procedure “WITH CONSULT-II” above.

Wiring Diagram

ABS007WG

EC-APPS3-01

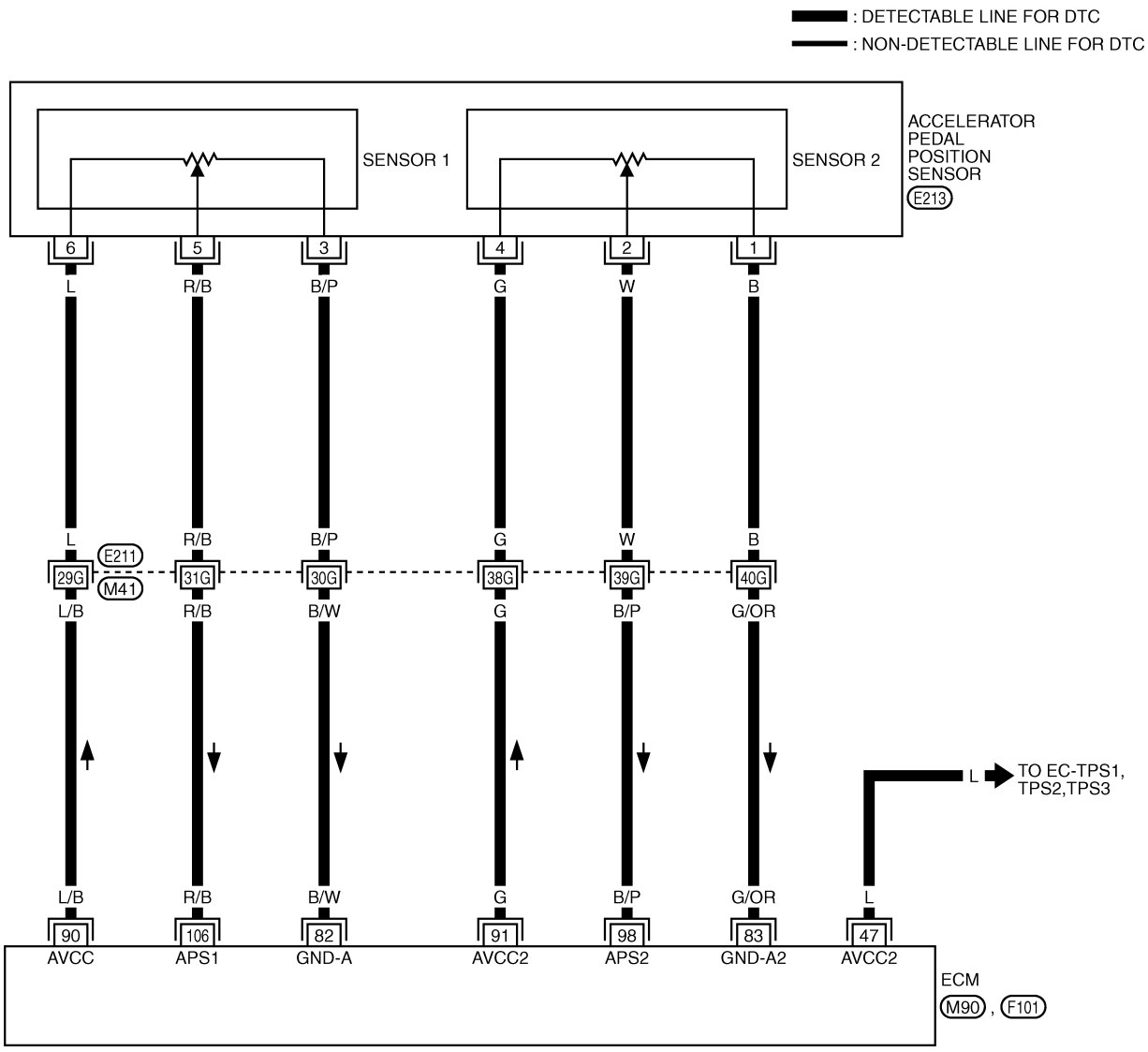

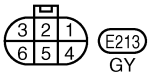

REFER TO THE FOLLOWING.
E211 -SUPER MULTIPLE JUNCTION (SMJ)

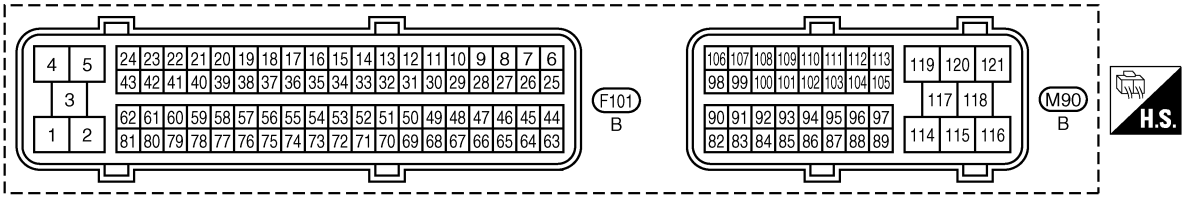

TBWM0509E

Specification data are reference values and are measured between each terminal and ground.

CAUTION:

Do not use ECM ground terminals when measuring input/output voltage. Doing so may result in damage to the ECM's transistor. Use a ground other than ECM terminals, such as the ground.

TERMINAL NO.	WIRE COLOR	ITEM	CONDITION	DATA (DC Voltage)
47	L	Sensor power supply (Throttle position sensor)	**[Ignition switch: ON]**	Approximately 5V
82	B/W	Sensor ground (APP sensor 1)	**[Engine is running]** ● **Warm-up condition** ● Idle speed	Approximately 0V
83	G/OR	Sensor ground (APP sensor 2)	**[Engine is running]** ● **Warm-up condition** ● Idle speed	Approximately 0V
90	L/B	Sensor power supply (APP sensor 1)	**[Ignition switch: ON]**	Approximately 5V
91	G	Sensor power supply (APP sensor 2)	**[Ignition switch: ON]**	Approximately 5V
98	B/P	Accelerator pedal position sensor 2	**[Ignition switch: ON]** ● Engine stopped ● Accelerator pedal: Fully released	0.15 - 0.60V
			[Ignition switch: ON] ● Engine stopped ● Accelerator pedal: Fully depressed	1.95 - 2.40V
106	R/B	Accelerator pedal position sensor 1	**[Ignition switch: ON]** ● Engine stopped ● Accelerator pedal: Fully released	0.5 - 1.0V
			[Ignition switch: ON] ● Engine stopped ● Accelerator pedal: Fully depressed	3.9 - 4.7V

Diagnostic Procedure

ABS007WH

1. CHECK GROUND CONNECTIONS

1. Turn ignition switch OFF.
2. Loosen and retighten three ground screws on the body.
   Refer to EC-861, "Ground Inspection" .

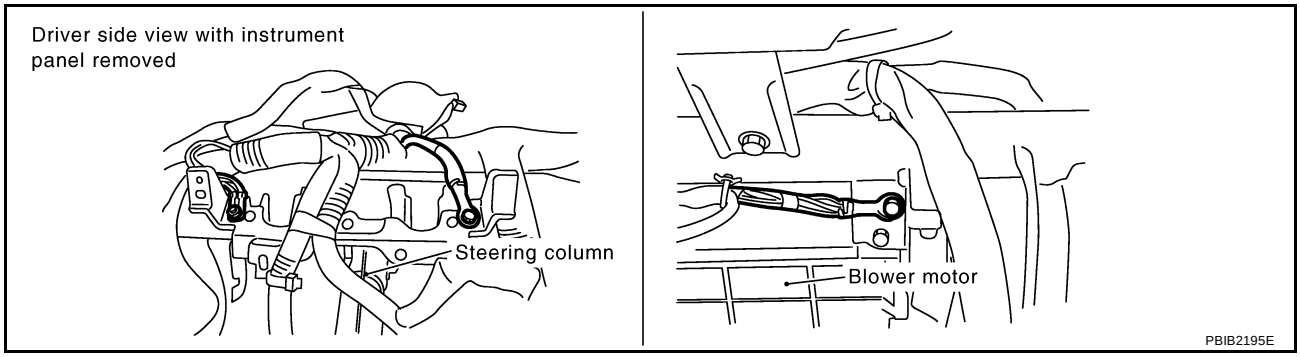

OK or NG

OK >> GO TO 2.
NG >> Repair or replace ground connections.

2. CHECK APP SENSOR 1 POWER SUPPLY CIRCUIT

1. Disconnect accelerator pedal position (APP) sensor harness connector.
2. Turn ignition switch ON.

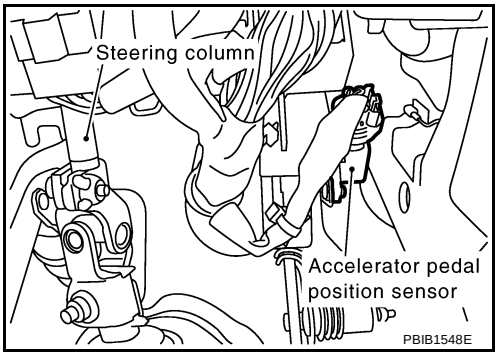

3. Check voltage between APP sensor terminal 6 and ground with CONSULT-II or tester.

Voltage: Approximately 5V

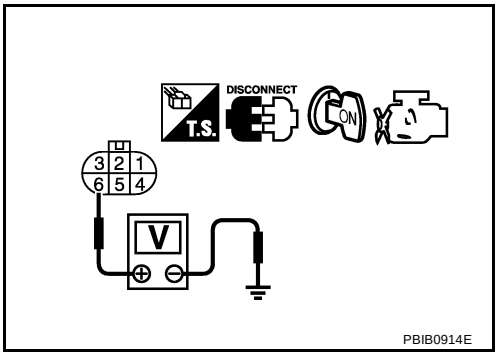

OK or NG

OK >> GO TO 4.
NG >> GO TO 3.

3. DETECT MALFUNCTIONING PART

Check the following.

- Harness connectors E211, M41
- Harness for open or short between ECM and accelerator pedal position sensor

>> Repair open circuit or short to ground or short to power in harness or connectors.

4. CHECK APP SENSOR 2 POWER SUPPLY CIRCUIT-I

1. Turn ignition switch ON.
2. Check voltage between APP sensor terminal 4 and ground with CONSULT-II or tester.

Voltage: Approximately 5V

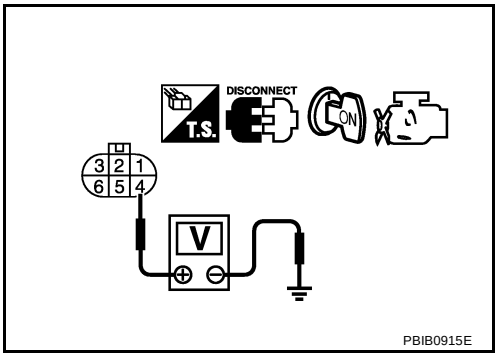

OK or NG

OK >> GO TO 10.
NG >> GO TO 5.

5. CHECK APP SENSOR 2 POWER SUPPLY CIRCUIT-II

1. Turn ignition switch OFF.
2. Disconnect ECM harness connector.
3. Check harness continuity between APP sensor terminal 4 and ECM terminal 91.
   Refer to Wiring Diagram.

Continuity should exist.

OK or NG

OK >> GO TO 7.
NG >> GO TO 6.

6. DETECT MALFUNCTIONING PART

Check the following.

- Harness connectors E211, M41
- Harness for open or short between ECM and accelerator pedal position sensor

>> Repair open circuit.

7. CHECK APP SENSOR 2 POWER SUPPLY CIRCUIT-III

Check harness for short to power and short to ground, between the following terminals.

ECM terminal	Sensor terminal	Reference Wiring Diagram
91	APP sensor terminal 4	EC-1325
47	Electric throttle control actuator terminal 1	EC-1318

OK or NG

OK >> GO TO 8.
NG >> Repair short to ground or short to power in harness or connectors.

8. CHECK THROTTLE POSITION SENSOR

Refer to EC-1322, "Component Inspection" .

OK or NG

OK >> GO TO 16.
NG >> GO TO 9.

9. REPLACE ELECTRIC THROTTLE CONTROL ACTUATOR

1. Replace the electric throttle control actuator.
2. Perform EC-786, "Throttle Valve Closed Position Learning" .
3. Perform EC-787, "Idle Air Volume Learning" .

>> **INSPECTION END**

10. CHECK APP SENSOR GROUND CIRCUIT FOR OPEN AND SHORT

1. Turn ignition switch OFF.
2. Disconnect ECM harness connector.
3. Check harness continuity between APP sensor terminal 3 and ECM terminal 82, APP sensor terminal 1 and ECM terminal 83.
   Refer to Wiring Diagram.

   Continuity should exist.

4. Also check harness for short to ground and short to power.

OK or NG

OK >> GO TO 12.
NG >> GO TO 11.

11. DETECT MALFUNCTIONING PART

Check the following.

- Harness connectors E211, M41
- Harness for open or short between ECM and accelerator pedal position sensor

>> Repair open circuit or short to ground or short to power in harness or connectors.

12. CHECK APP SENSOR INPUT SIGNAL CIRCUIT FOR OPEN AND SHORT

1. Check harness continuity between ECM terminal 106 and APP sensor terminal 5, ECM terminal 98 and APP sensor terminal 2.
   Refer to Wiring Diagram.

   Continuity should exist.

2. Also check harness for short to ground and short to power.

OK or NG

OK >> GO TO 14.
NG >> GO TO 13.

13. DETECT MALFUNCTIONING PART

Check the following.

- Harness connectors E211, M41
- Harness for open or short between ECM and accelerator pedal position sensor

>> Repair open circuit or short to ground or short to power in harness or connectors.

14. CHECK APP SENSOR

Refer to EC-1330, "Component Inspection" .

OK or NG

OK >> GO TO 16.
NG >> GO TO 15.

15. REPLACE ACCELERATOR PEDAL ASSEMBLY

1. Replace accelerator pedal assembly.
2. Perform EC-786, "Accelerator Pedal Released Position Learning" .
3. Perform EC-786, "Throttle Valve Closed Position Learning" .
4. Perform EC-787, "Idle Air Volume Learning" .

>> **INSPECTION END**

16. CHECK INTERMITTENT INCIDENT

Refer to EC-854, "TROUBLE DIAGNOSIS FOR INTERMITTENT INCIDENT" .

>> **INSPECTION END**

Component Inspection

ABS007WI

ACCELERATOR PEDAL POSITION SENSOR

1. Reconnect all harness connectors disconnected.
2. Turn ignition switch ON.
3. Check voltage between ECM terminals 106 (APP sensor 1 signal), 98 (APP sensor 2 signal) and ground under the following conditions.

Terminal	Accelerator pedal	Voltage
106 (Accelerator pedal position sensor 1)	Fully released	0.5 - 1.0V
	Fully depressed	3.9 - 4.7V
98 (Accelerator pedal position sensor 2)	Fully released	0.15 - 0.60V
	Fully depressed	1.95 - 2.40V

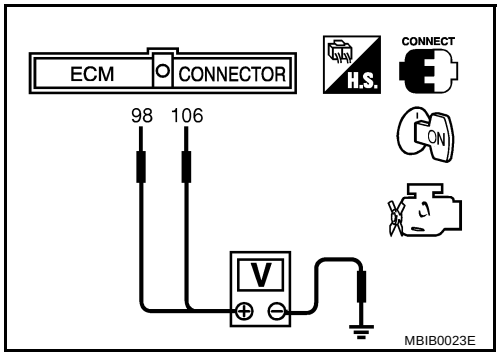

4. If NG, replace accelerator pedal assembly and go to next step.
5. Perform EC-786, "Accelerator Pedal Released Position Learning" .
6. Perform EC-786, "Throttle Valve Closed Position Learning" .
7. Perform EC-787, "Idle Air Volume Learning" .

Removal and Installation

ABS007WJ

ACCELERATOR PEDAL

Refer to ACC-3, "ACCELERATOR CONTROL SYSTEM" .

VARIABLE INDUCTION AIR CONTROL SYSTEM (VIAS)

PFP:14956

Description

ABS007WK

SYSTEM DESCRIPTION

Sensor	Input signal to ECM	ECM function	Actuator
Crankshaft position sensor (POS) Camshaft position sensor (PHASE)	Engine speed*	VIAS control	VIAS control solenoid valve
Mass air flow sensor	Amount of intake air		
Throttle position sensor	Throttle position		
Accelerator pedal position sensor	Accelerator pedal position		
Battery	Battery voltage*		
Engine coolant temperature sensor	Engine coolant temperature		

*: The ECM determines the start signal status by the signals of engine speed and battery voltage.

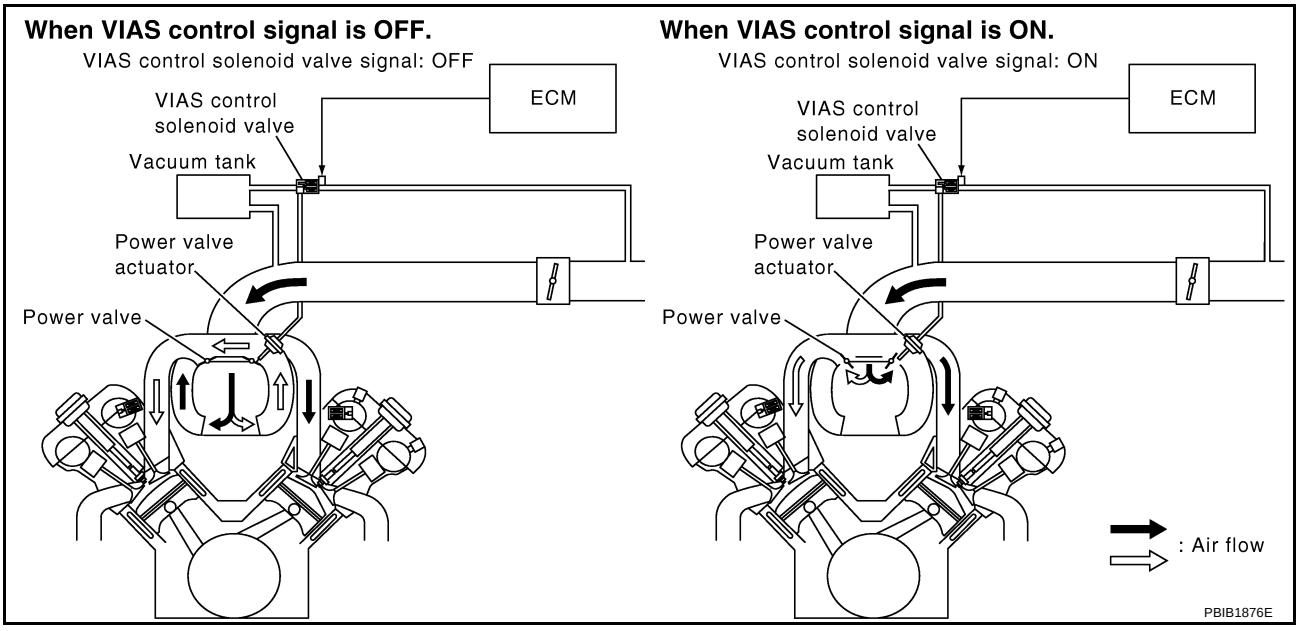

When the engine is running at low or medium speed, the power valve is fully closed. Under this condition, the effective suction port length is equivalent to the total length of the intake manifold collector's suction port including the intake valve. This long suction port provides increased air intake which results in improved suction efficiency and higher torque generation.

The surge tank and one-way valve are provided. When engine is running at high speed, the ECM sends the signal to the VIAS control solenoid valve. This signal introduces the intake manifold vacuum into the power valve actuator and therefore opens the power valve to two suction passages together in the collector.

Under this condition, the effective port length is equivalent to the length of the suction port provided independently for each cylinder. This shortened port length results in enhanced engine output with reduced suction resistance under high speeds.

The power valve is always open regardless of the engine speed when gear position is in N or P.

COMPONENT DESCRIPTION

Power Valve

The power valve is installed in intake manifold collector and used to control the suction passage of the variable induction air control system. It is set in the fully closed or fully opened position by the power valve actuator operated by the vacuum stored in the surge tank. The vacuum in the surge tank is controlled by the VIAS control solenoid valve.

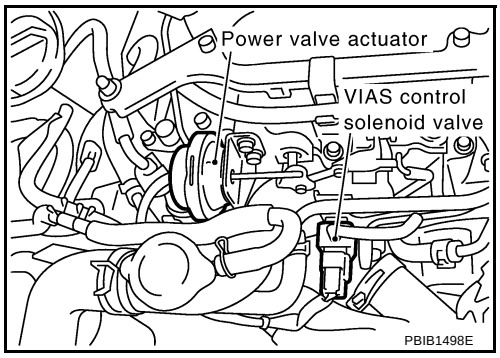

VIAS Control Solenoid Valve

The VIAS control solenoid valve cuts the intake manifold vacuum signal for power valve control. It responds to ON/OFF signals from the ECM. When the solenoid is off, the vacuum signal from the intake manifold is cut. When the ECM sends an ON signal the coil pulls the plunger downward and feeds the vacuum signal to the power valve actuator.

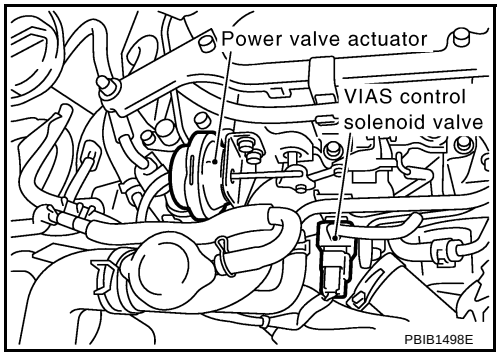

CONSULT-II Reference Value in Data Monitor Mode

ABS007WL

MONITOR ITEM	CONDITION		SPECIFICATION
VIAS S/V	● Engine speed: Idle	Selector lever: P or N and/or Engine speed: More than 5,000 rpm	ON
		Except above	OFF

Wiring Diagram

ABS007WM

EC-VIAS-01

: DETECTABLE LINE FOR DTC
: NON-DETECTABLE LINE FOR DTC

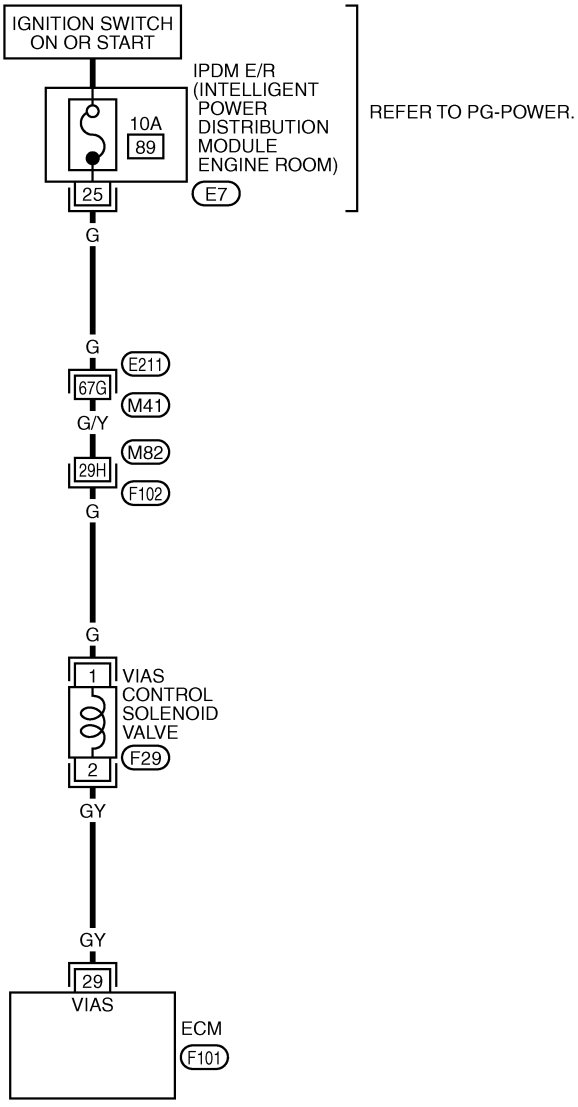

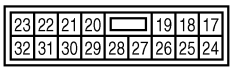

E7
GY

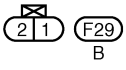

F29
B

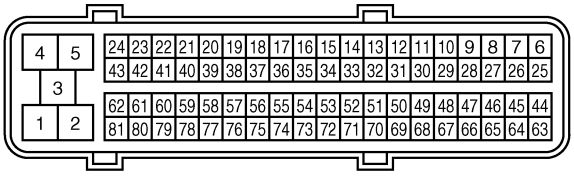

F101
B

REFER TO THE FOLLOWING.
E211 , F102 -SUPER MULTIPLE JUNCTION (SMJ)

TBWM0849E

Specification data are reference values and are measured between each terminal and ground.

CAUTION:

Do not use ECM ground terminals when measuring input/output voltage. Doing so may result in damage to the ECM's transistor. Use a ground other than ECM terminals, such as the ground.

TERMINAL NO.	WIRE COLOR	ITEM	CONDITION	DATA (DC Voltage)
29	GY	VIAS control solenoid valve	**[Engine is running]** ● Selector lever: P or N	0 - 1.0V
			[Engine is running] ● Selector lever: D	BATTERY VOLTAGE (11 - 14V)
			[Engine is running] ● Engine speed: Above 5,000 rpm	0 - 1.0V

Diagnostic Procedure

ABS007WN

1. CHECK OVERALL FUNCTION

With CONSULT-II

1. Start engine and warm it up to normal operating temperature.
2. Perform “VIAS SOL VALVE” in “ACTIVE TEST” mode with CONSULT-II.
3. Turn VIAS control solenoid valve ON and OFF, and make sure that power valve actuator rod moves.

ACTIVE TEST	
VIAS SOL VALVE	OFF
MONITOR	
ENG SPEED	XXX rpm

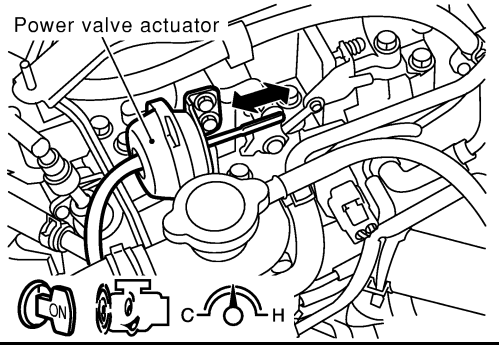

PBIB0171E

Without CONSULT-II

1. Lift up the vehicle.
2. Start engine and warm it up to normal operating temperature.
3. Make sure that power valve actuator rod moves when changing the gear position to N and D alternately.

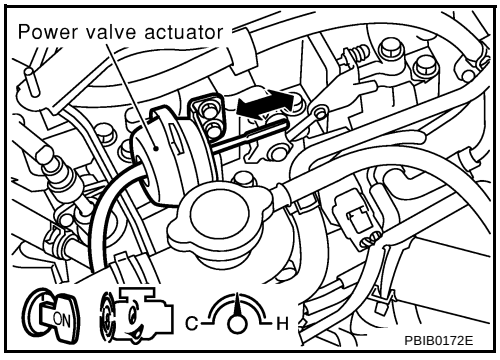

PBIB0172E

OK or NG

OK >> **INSPECTION END**
NG (With CONSULT-II)>>GO TO 2.
NG (Without CONSULT-II)>>GO TO 3.

2. CHECK VACUUM EXISTENCE

With CONSULT-II

1. Stop engine and disconnect vacuum hose connected to power valve actuator.
2. Start engine and let it idle.
3. Perform “VIAS SOL VALVE” in “ACTIVE TEST” mode with CONSULT-II.
4. Turn VIAS control solenoid valve ON and OFF, and check vacuum existence under the following conditions.

ACTIVE TEST	
VIAS SOL VALVE	OFF
MONITOR	
ENG SPEED	XXX rpm

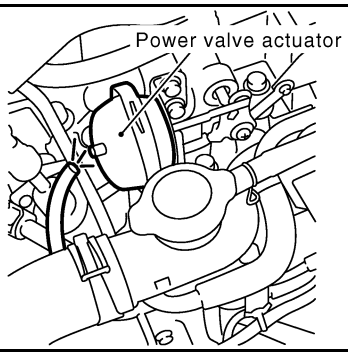

VIAS SOL VALVE	Vacuum
ON	Should exist.
OFF	Should not exist.

OK or NG

OK >> Repair or replace power valve actuator.
NG >> GO TO 4.

3. CHECK VACUUM EXISTENCE

Without CONSULT-II

1. Stop engine and disconnect vacuum hose connected to power valve actuator.
2. Disconnect VIAS control solenoid valve harness connector.
3. Start engine and let it idle.
4. Apply 12V of direct current between VIAS control solenoid valve terminals 1 and 2.
5. Check vacuum existence under the following conditions.

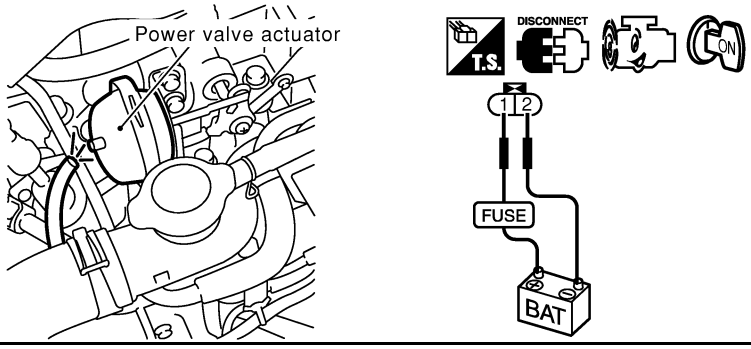

Condition	Vacuum
12V direct current supply	Should exist.
No supply	Should not exist.

OK or NG

OK >> Repair or replace power valve actuator.
NG >> GO TO 4.

4. CHECK VACUUM HOSE

1. Stop engine.
2. Check hoses and tubes between intake manifold and power valve actuator for crack, clogging, improper connection or disconnection. Refer to EC-810, "Vacuum Hose Drawing" .

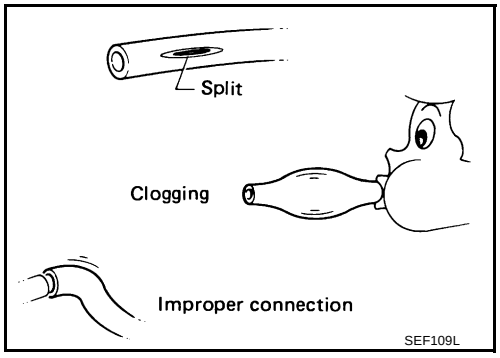

OK or NG

OK >> GO TO 5.
NG >> Repair hoses or tubes.

5. CHECK VACUUM TANK

Refer to EC-1337, "Component Inspection" .

OK or NG

OK >> GO TO 6.
NG >> Replace vacuum tank.

6. CHECK VIAS CONTROL SOLENOID VALVE POWER SUPPLY CIRCUIT

1. Turn ignition switch OFF.
2. Disconnect VIAS control solenoid valve harness connector.
3. Turn ignition switch ON.

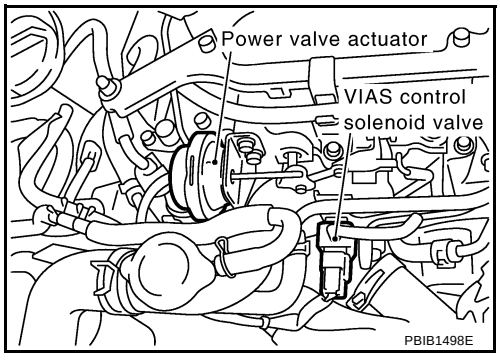

4. Check voltage between terminal 1 and ground with CONSULT-II or tester.

Voltage: Battery voltage

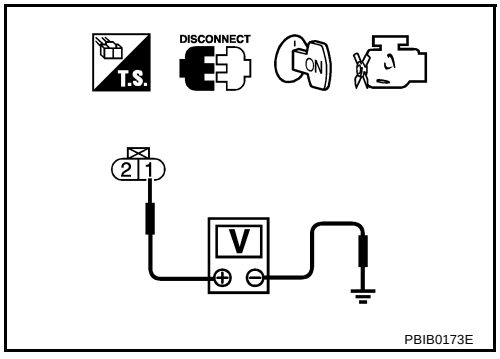

OK or NG

OK >> GO TO 8.
NG >> GO TO 7.

7. DETECT MALFUNCTIONING PART

Check the following.

- Harness connectors E211, M41
- Harness connectors M82, F102
- IPDM E/R connector E7
- 10A fuse
- Harness continuity between IPDM E/R and VIAS control solenoid valve

>> Repair open circuit or short to ground or short to power in harness or connectors.

8. CHECK VIAS CONTROL SOLENOID VALVE OUTPUT SIGNAL CIRCUIT FOR OPEN AND SHORT

1. Turn ignition switch OFF.
2. Disconnect ECM harness connector.
3. Check harness continuity between ECM terminal 29 and VIAS control solenoid valve terminal 2. Refer to Wiring Diagram.

Continuity should exist.

4. Also check harness for short to ground and short to power.

OK or NG

OK >> GO TO 9.
NG >> Repair open circuit or short to ground or short to power in harness or connectors.

9. CHECK VIAS CONTROL SOLENOID VALVE

Refer to EC-1337, "Component Inspection" .

OK or NG

OK >> GO TO 10.
NG >> Replace VIAS control solenoid valve.

10. CHECK INTERMITTENT INCIDENT

Refer to EC-854, "TROUBLE DIAGNOSIS FOR INTERMITTENT INCIDENT" .

>> **INSPECTION END**

Component Inspection

ABS007WO

VIAS CONTROL SOLENOID VALVE

With CONSULT-II

1. Reconnect harness connectors disconnected.
2. Turn ignition switch ON.
3. Perform “VIAS SOL VALVE” in “ACTIVE TEST” mode.
4. Check air passage continuity and operation delay time under the following conditions.

Condition VIAS SOL VALVE	Air passage continuity between A and B	Air passage continuity between A and C
ON	Yes	No
OFF	No	Yes

Operation takes less than 1 second.

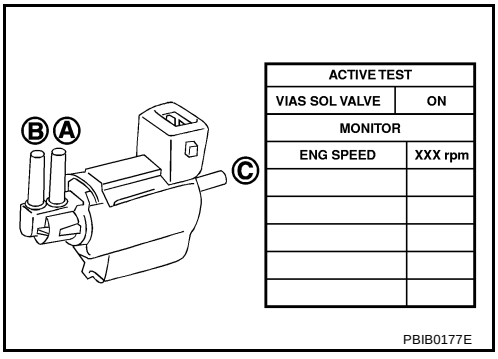

Without CONSULT-II

Check air passage continuity and operation delay time under the following conditions.

Condition	Air passage continuity between A and B	Air passage continuity between A and C
12V direct current supply between terminals 1 and 2	Yes	No
No supply	No	Yes

Operation takes less than 1 second.

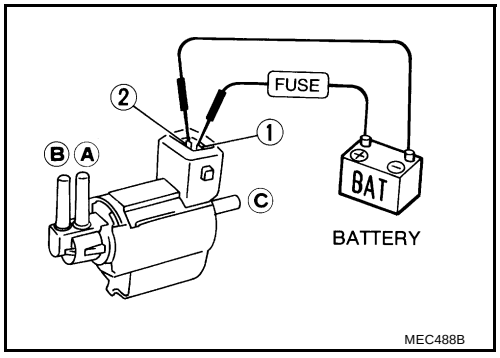

VACUUM TANK

1. Disconnect vacuum hose connected to vacuum tank.
2. Connect a vacuum pump to the port A of vacuum tank.
3. Apply vacuum and make sure that vacuum exists at the port B.

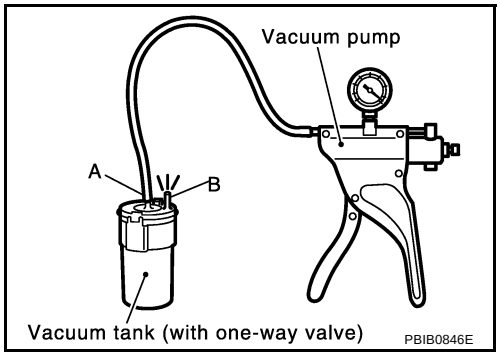

Removal and Installation

ABS007WP

VIAS CONTROL SOLENOID VALVE

Refer to EM-178, "INTAKE MANIFOLD" .

IGNITION SIGNAL

PFP:22448

Component Description

ABS007WQ

IGNITION COIL & POWER TRANSISTOR

The ignition signal from the ECM is sent to and amplified by the power transistor. The power transistor turns ON and OFF the ignition coil primary circuit. This ON/OFF operation induces the proper high voltage in the coil secondary circuit.

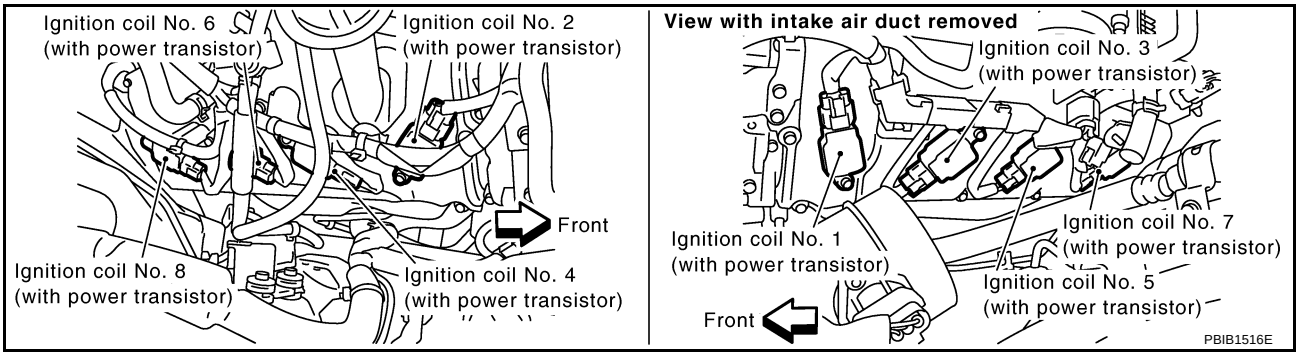

Wiring Diagram

ABS007WR

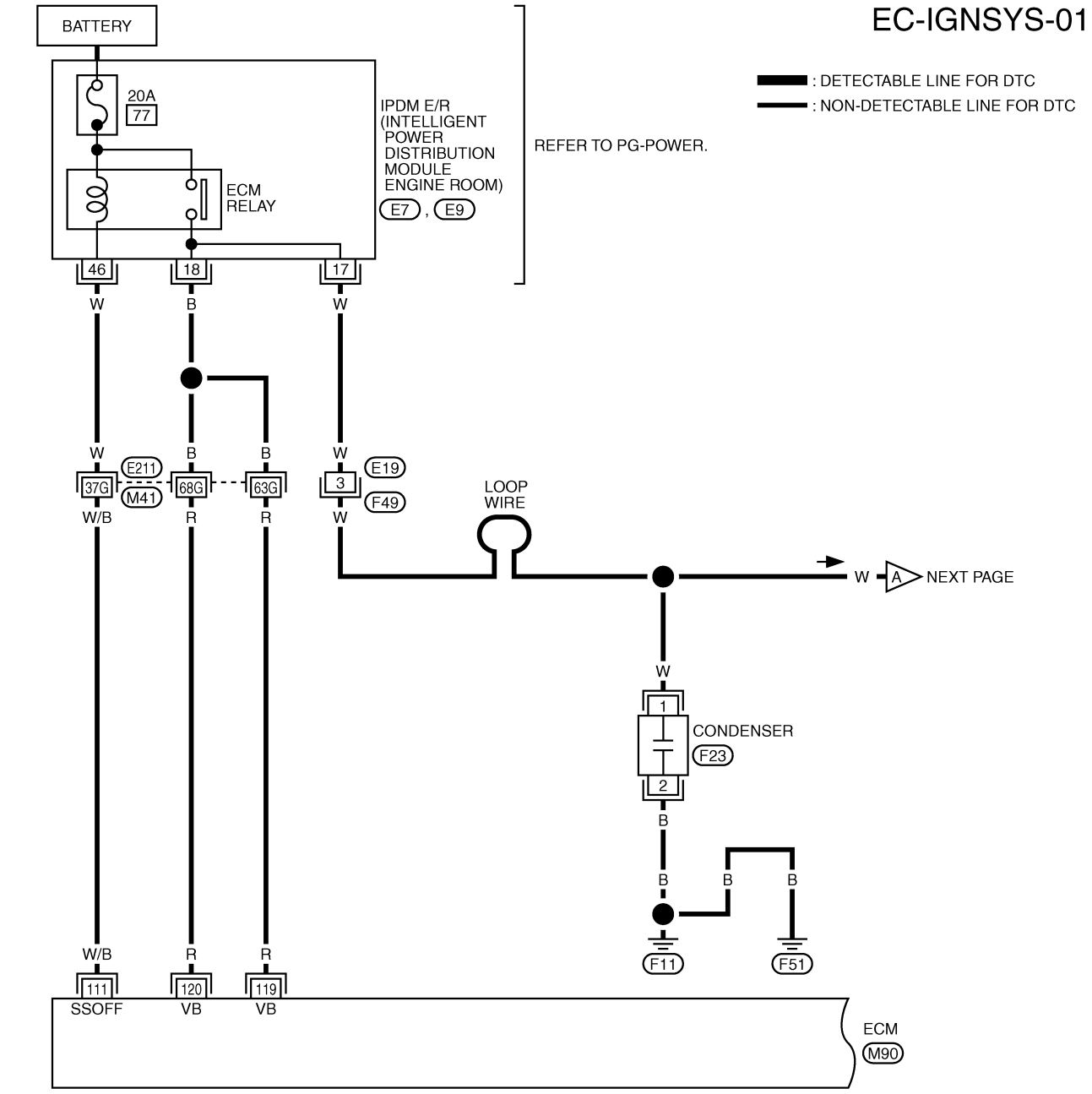

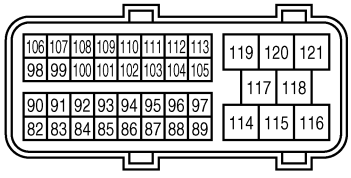

M90
B

REFER TO THE FOLLOWING.
E211 -SUPER MULTIPLE JUNCTION (SMJ)

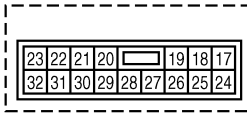

E7
GY

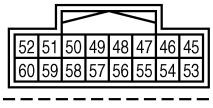

E9
W

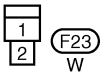

F23
W

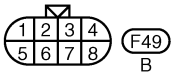

F49
B

TBWM0726E

Specification data are reference values and are measured between each terminal and ground.

CAUTION:

Do not use ECM ground terminals when measuring input/output voltage. Doing so may result in damage to the ECM's transistor. Use a ground other than ECM terminals, such as the ground.

TERMINAL NO.	WIRE COLOR	ITEM	CONDITION	DATA (DC Voltage)
111	W/B	ECM relay (Self shut-off)	**[Engine is running]** **[Ignition switch: OFF]** ● For a few seconds after turning ignition switch OFF	0 - 1.5V
			[Ignition switch: OFF] ● More than a few seconds after turning ignition switch OFF	BATTERY VOLTAGE (11 - 14V)
119 120	R R	Power supply for ECM	**[Ignition switch: ON]**	BATTERY VOLTAGE (11 - 14V)

EC-IGNSYS-02

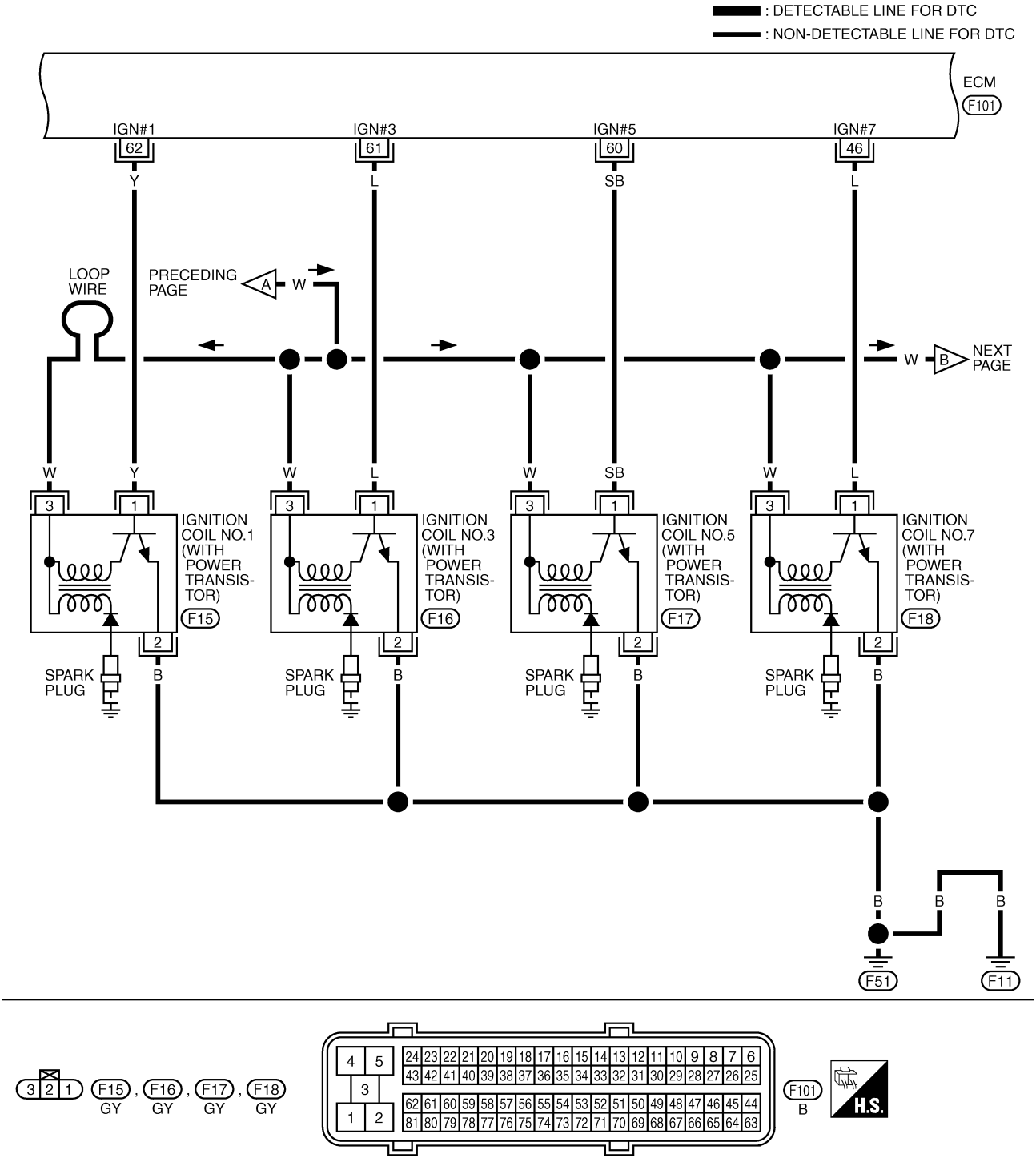

TBWM0727E

Specification data are reference values and are measured between each terminal and ground.
Pulse signal is measured by CONSULT-II.

CAUTION:
Do not use ECM ground terminals when measuring input/output voltage. Doing so may result in damage to the ECM's transistor. Use a ground other than ECM terminals, such as the ground.

TERMINAL NO.	WIRE COLOR	ITEM	CONDITION	DATA (DC Voltage)
46 60 61 62	L SB L Y	Ignition signal No. 7 Ignition signal No. 5 Ignition signal No. 3 Ignition signal No. 1	**[Engine is running]** ● **Warm-up condition** ● Idle speed **NOTE:** The pulse cycle changes depending on rpm at idle	0 - 0.2V★ 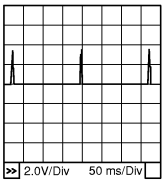 PBIB0044E
			[Engine is running] ● **Warm-up condition** ● Engine speed: 2,000 rpm	0.1 - 0.4V★ 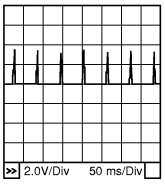 PBIB0045E

★: Average voltage for pulse signal (Actual pulse signal can be confirmed by oscilloscope.)

EC-IGNSYS-03

: DETECTABLE LINE FOR DTC
: NON-DETECTABLE LINE FOR DTC

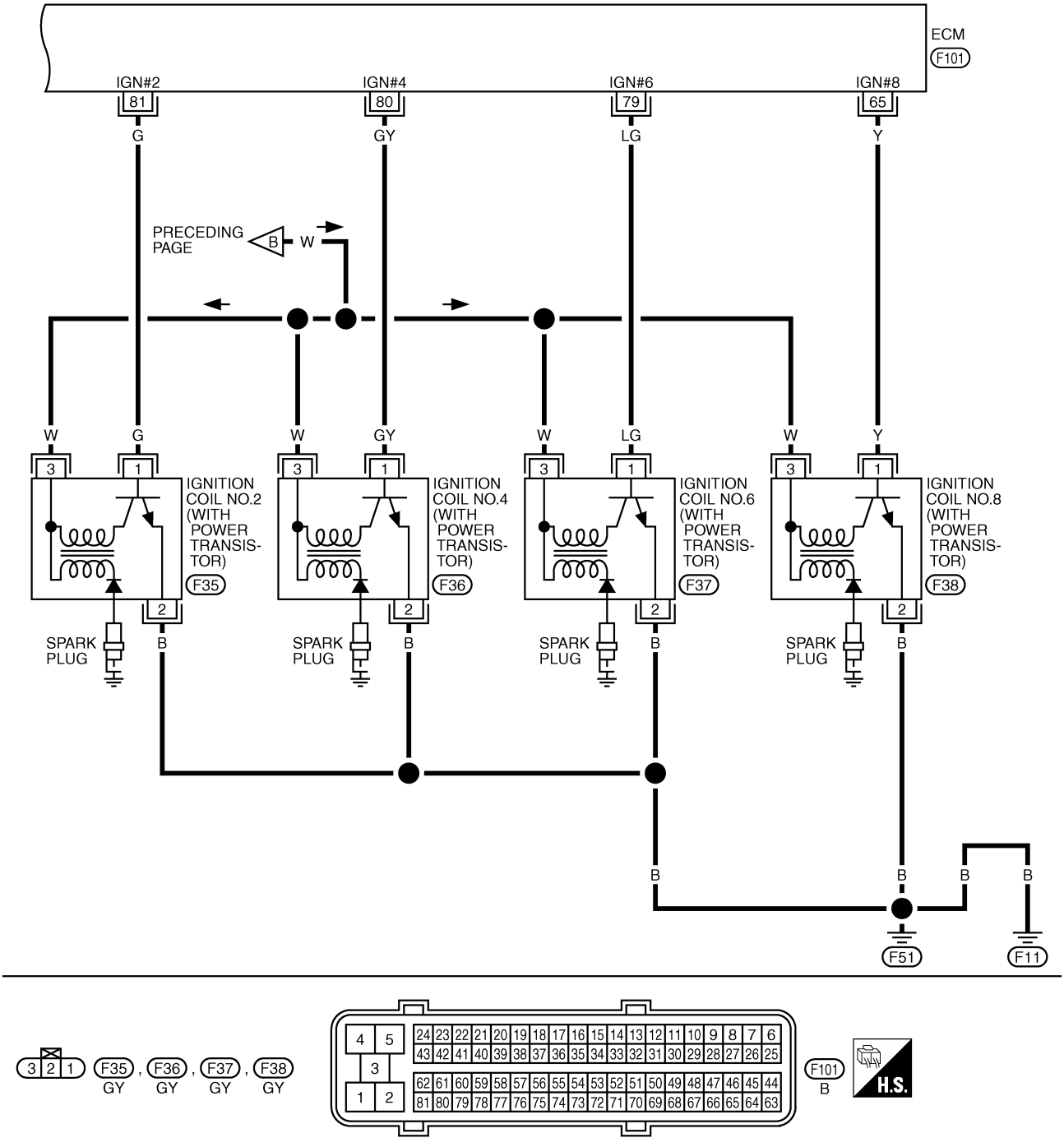

TBWM0728E

Specification data are reference values and are measured between each terminal and ground.
Pulse signal is measured by CONSULT-II.

CAUTION:
Do not use ECM ground terminals when measuring input/output voltage. Doing so may result in damage to the ECM's transistor. Use a ground other than ECM terminals, such as the ground.

TERMINAL NO.	WIRE COLOR	ITEM	CONDITION	DATA (DC Voltage)
65 79 80 81	Y LG GY G	Ignition signal No. 8 Ignition signal No. 6 Ignition signal No. 4 Ignition signal No. 2	**[Engine is running]** ● **Warm-up condition** ● Idle speed **NOTE:** The pulse cycle changes depending on rpm at idle	0 - 0.2V★ 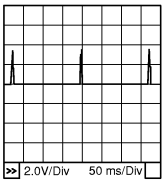 PBIB0044E
			[Engine is running] ● **Warm-up condition** ● Engine speed: 2,000 rpm	0.1 - 0.4V★ 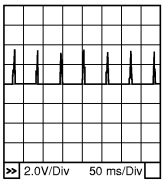 PBIB0045E

★: Average voltage for pulse signal (Actual pulse signal can be confirmed by oscilloscope.)

Diagnostic Procedure

ABS00E5R

1. CHECK ENGINE START

Turn ignition switch OFF, and restart engine.
Is engine running?

Yes or No

Yes (With CONSULT-II)>>GO TO 2.
Yes (Without CONSULT-II)>>GO TO 3.
No >> GO TO 4.

2. CHECK OVERALL FUNCTION

With CONSULT-II

1. Perform “POWER BALANCE” in “ACTIVE TEST” mode with CONSULT-II.
2. Make sure that each circuit produces a momentary engine speed drop.

OK or NG

OK >> **INSPECTION END**
NG >> GO TO 10.

ACTIVE TEST	
POWER BALANCE	
MONITOR	
ENG SPEED	XXX rpm
MAS A/F SE-B1	XXX V

PBIB0133E

3. CHECK OVERALL FUNCTION

Without CONSULT-II

1. Let engine idle.
2. Read the voltage signal between ECM terminals 46, 60, 61, 62, 65, 79, 80, 81 and ground with an oscilloscope.
3. Verify that the oscilloscope screen shows the signal wave as shown below.

   NOTE:
   The pulse cycle changes depending on rpm at idle.

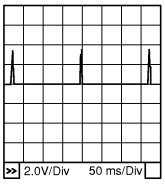

PBIB0044E

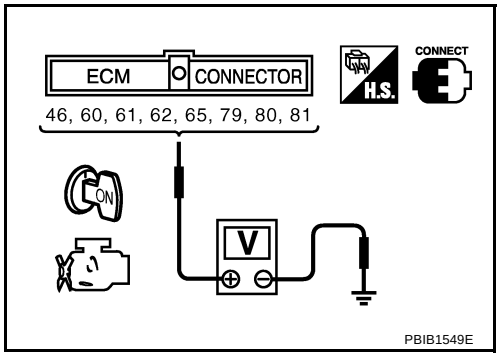

PBIB1549E

OK or NG

OK >> **INSPECTION END**
NG >> GO TO 10.

4. CHECK IGNITION COIL POWER SUPPLY CIRCUIT-I

1. Turn ignition switch OFF, wait at least 10 seconds and then turn ON.
2. Check voltage between ECM terminals 119, 120 and ground with CONSULT-II or tester.

   Voltage: Battery voltage

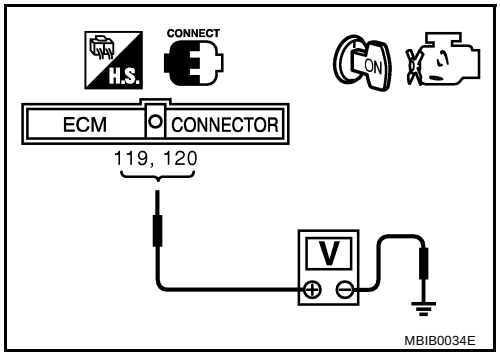

MBIB0034E

OK or NG

OK >> GO TO 5.
NG >> Go to EC-855, "POWER SUPPLY AND GROUND CIRCUIT" .

5. CHECK IGNITION COIL POWER SUPPLY CIRCUIT-II

1. Turn ignition switch OFF.
2. Disconnect condenser harness connector.
3. Turn ignition switch ON.

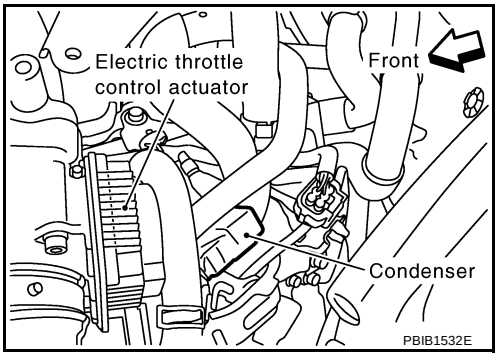

4. Check voltage between condenser terminal 1 and ground with CONSULT-II or tester.

Voltage: Battery voltage

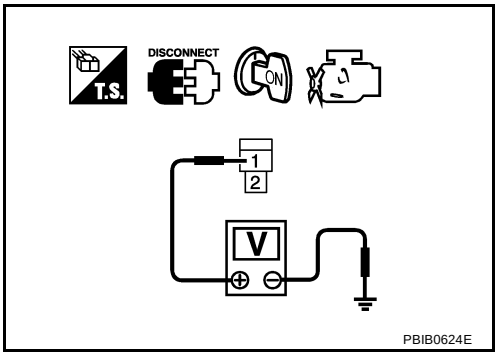

OK or NG

OK >> GO TO 8.
NG >> GO TO 6.

6. CHECK IGNITION COIL POWER SUPPLY CIRCUIT-III

1. Turn ignition switch OFF.
2. Disconnect IPDM E/R harness connector E7.
3. Check harness continuity between IPDM E/R terminal 17 and condenser terminal 1. Refer to Wiring Diagram.

Continuity should exist.

4. Also check harness for short to ground and short to power.

OK or NG

OK >> Go to EC-855, "POWER SUPPLY AND GROUND CIRCUIT" .
NG >> GO TO 7.

7. DETECT MALFUNCTIONING PART

Check the following.

- Harness connectors E19, F49
- Harness for open or short between IPDM E/R and condenser

>> Repair open circuit or short to ground or short to power in harness or connectors.

8. CHECK CONDENSER GROUND CIRCUIT FOR OPEN AND SHORT

1. Turn ignition switch OFF.
2. Check harness continuity between condenser terminal 2 and ground.
   Refer to Wiring Diagram.

   Continuity should exist.

3. Also check harness for short to power.

OK or NG

OK >> GO TO 9.
NG >> Repair open circuit or short to power in harness or connectors.

9. CHECK CONDENSER

Refer to EC-1349, "Component Inspection"

OK or NG

OK >> GO TO 10.
NG >> Replace condenser.

10. CHECK IGNITION COIL POWER SUPPLY CIRCUIT-V

1. Reconnect all harness connectors disconnected.
2. Disconnect ignition coil harness connector.

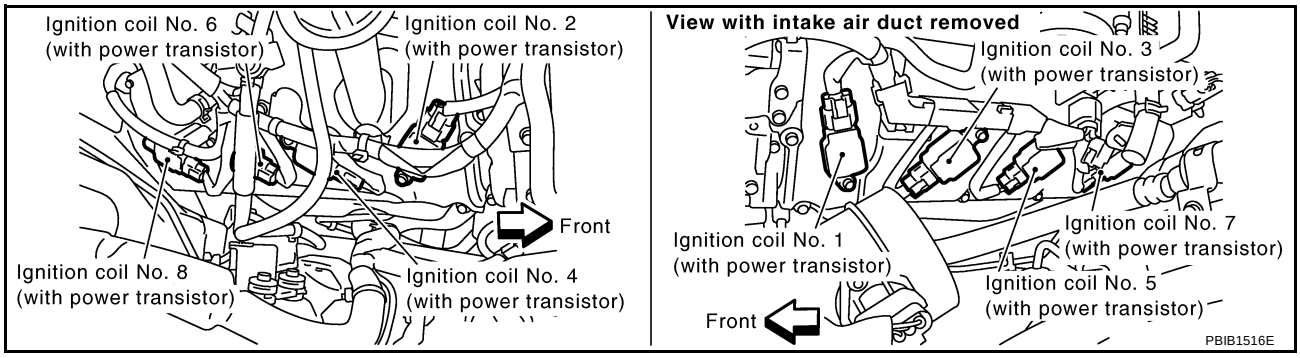

3. Turn ignition switch ON.
4. Check voltage between ignition coil terminal 3 and ground with CONSULT-II or tester.

   Voltage: Battery voltage

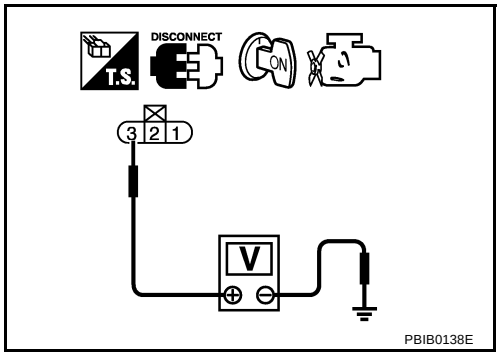

OK or NG

OK >> GO TO 12.
NG >> GO TO 11.

11. DETECT MALFUNCTIONING PART

Check the following.

- Harness connector F49
- Harness for open or short between ignition coil and harness connector F49

>> Repair or replace harness or connectors.

12. CHECK IGNITION COIL GROUND CIRCUIT FOR OPEN AND SHORT

1. Turn ignition switch OFF.
2. Check harness continuity between ignition coil terminal 2 and ground.
   Refer to Wiring Diagram.

   Continuity should exist.

3. Also check harness for short to power.

OK or NG

OK >> GO TO 13.
NG >> Repair open circuit or short to power in harness or connectors.

13. CHECK IGNITION COIL OUTPUT SIGNAL CIRCUIT FOR OPEN AND SHORT

1. Disconnect ECM harness connector.
2. Check harness continuity between ECM terminals 46, 60, 61, 62, 65, 79, 80, 81 and ignition coil terminal 1. Refer to Wiring Diagram.

   Continuity should exist.

3. Also check harness for short to ground and short to power.

OK or NG

OK >> GO TO 14.
NG >> Repair open circuit or short to ground or short to power in harness or connectors.

14. CHECK IGNITION COIL WITH POWER TRANSISTOR

Refer to EC-1349, "Component Inspection" .

OK or NG

OK >> GO TO 15.
NG >> Replace ignition coil with power transistor.

15. CHECK INTERMITTENT INCIDENT

Refer to EC-854, "TROUBLE DIAGNOSIS FOR INTERMITTENT INCIDENT" .

>> **INSPECTION END**

Component Inspection

ABS00E5S

IGNITION COIL WITH POWER TRANSISTOR

CAUTION:

Do the following procedure in the place where ventilation is good without the combustible.

1. Turn ignition switch OFF.
2. Disconnect ignition coil harness connector.
3. Check resistance between ignition coil terminals as follows.

Terminal No. (Polarity)	Resistance Ω [at 25°C (77°F)]
1 and 2	Except 0 or ∞
1 and 3	Except 0
2 and 3	

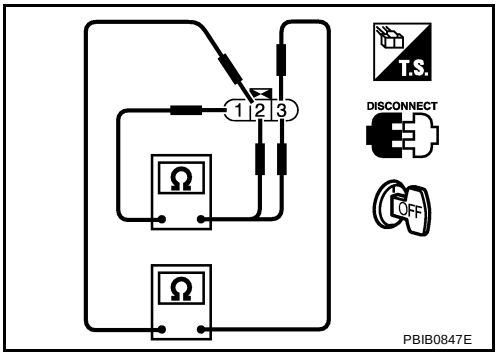

4. If NG, replace ignition coil with power transistor.
   If OK, go to next step.
5. Turn ignition switch OFF.
6. Reconnect all harness connectors disconnected.

7. Remove fuel pump fuse in IPDM E/R to release fuel pressure.

   NOTE:
   Do not use CONSULT-II to release fuel pressure, or fuel pressure applies again during the following procedure.
8. Start engine.
9. After engine stalls, crank it two or three times to release all fuel pressure.
10. Turn ignition switch OFF.
11. Remove all ignition coil harness connectors to avoid the electrical discharge from the ignition coils.
12. Remove ignition coil and spark plug of the cylinder to be checked.

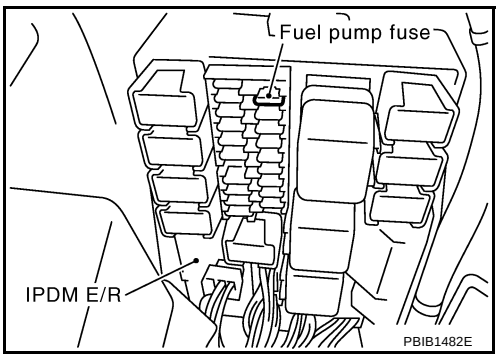

13. Crank engine for five seconds or more to remove combustion gas in the cylinder.
14. Connect spark plug and harness connector to ignition coil.
15. Fix ignition coil using a rope etc. with gap of 13 - 17 mm between the edge of the spark plug and grounded metal portion as shown in the figure.
16. Crank engine for about three seconds, and check whether spark is generated between the spark plug and the grounded metal portion.

    Spark should be generated.

    CAUTION:
    - **Do not approach to the spark plug and the ignition coil within 50cm. Be careful not to get an electrical shock while checking, because the electrical discharge voltage becomes 20kV or more.**
    - **It might cause to damage the ignition coil if the gap of 17 mm or more is taken.**

    NOTE:
    When the gap is 13 mm or less, the spark might be generated even if the coil is malfunctioning.

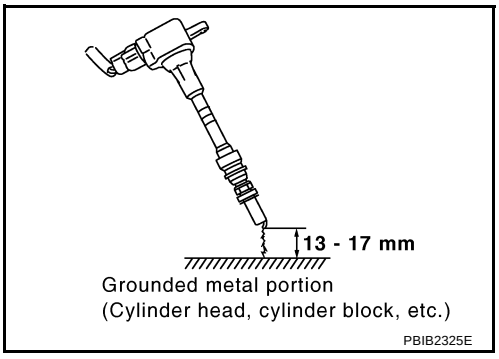

17. If NG, replace ignition coil with power transistor.

CONDENSER

1. Turn ignition switch OFF.
2. Disconnect condenser harness connector.
3. Check resistance between condenser terminals 1 and 2.

   Resistance: Above 1 MΩ at 25°C (77°F)

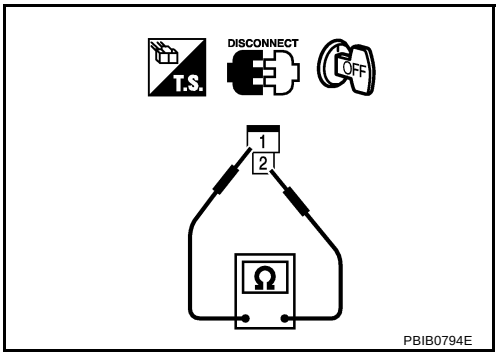

Removal and Installation

ABS007WU

IGNITION COIL WITH POWER TRANSISTOR

Refer to EM-189, "IGNITION COIL" .

INJECTOR CIRCUIT

PFP:16600

Component Description

ABS007WV

The fuel injector is a small, precise solenoid valve. When the ECM supplies a ground to the injector circuit, the coil in the injector is energized. The energized coil pulls the ball valve back and allows fuel to flow through the injector into the intake manifold. The amount of fuel injected depends upon the injection pulse duration. Pulse duration is the length of time the injector remains open. The ECM controls the injection pulse duration based on engine fuel needs.

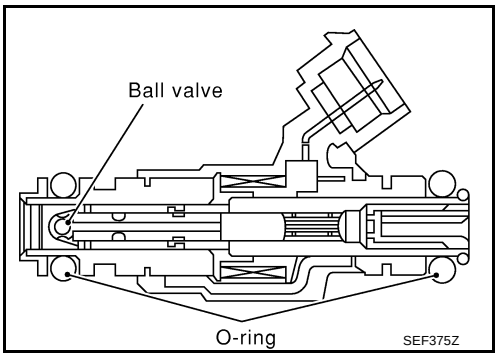

CONSULT-II Reference Value in Data Monitor Mode

ABS007WW

Specification data are reference values.

MONITOR ITEM	CONDITION		SPECIFICATION
B/FUEL SCHDL	See EC-844, "TROUBLE DIAGNOSIS - SPECIFICATION VALUE" .		
INJ PULSE-B1 INJ PULSE-B2	● Engine: After warming up ● Selector lever: P or N ● Air conditioner switch: OFF ● No load	Idle	2.0 - 3.0 msec
		2,000 rpm	1.9 - 2.9 msec

Wiring Diagram

ABS007WX

EC-INJECT-01

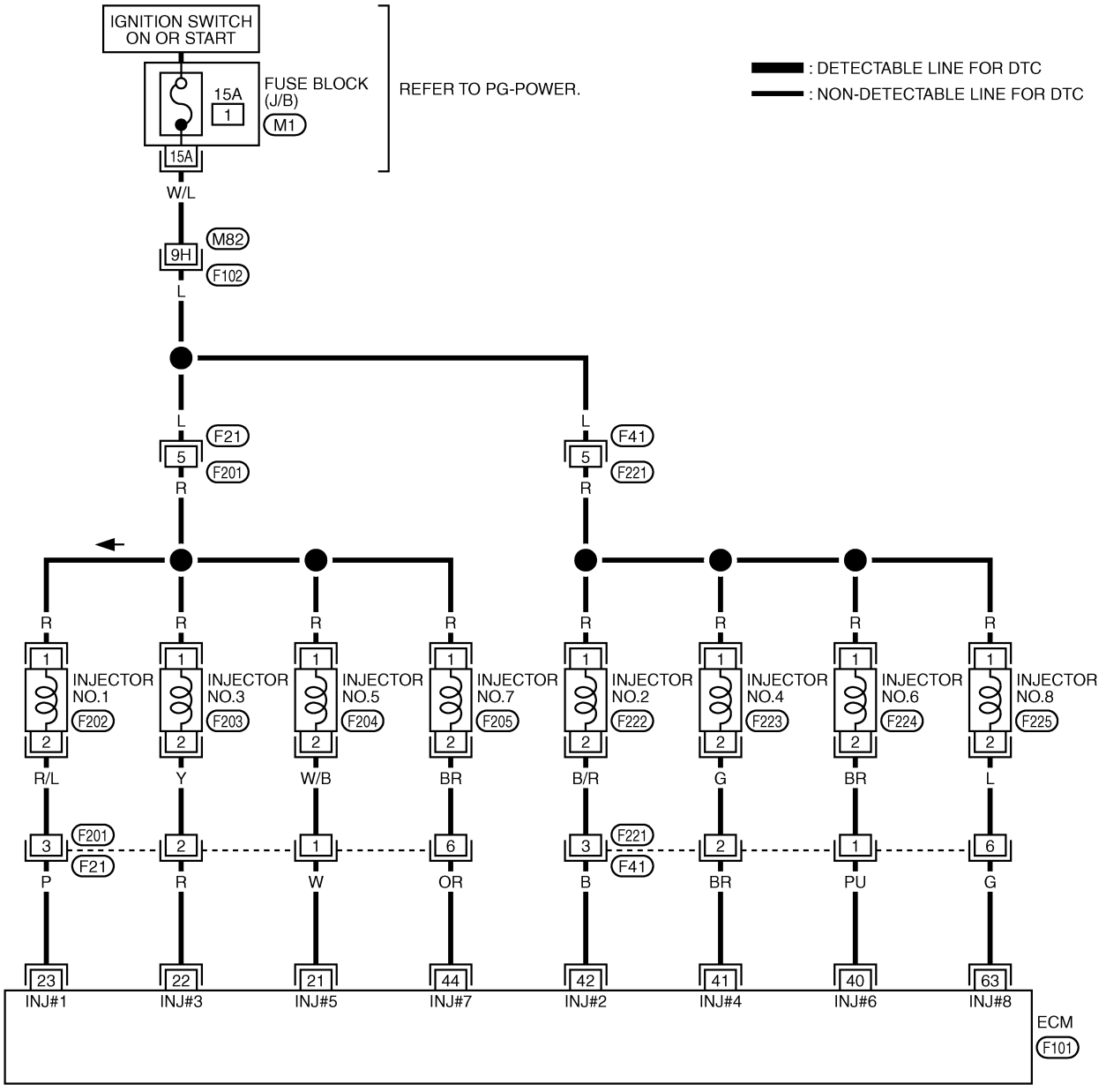

F21 , F41
DGY DGY

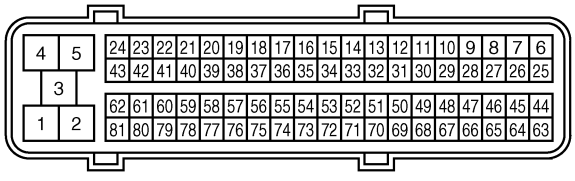

F101
B

F202 , F203 , F204 , F205 , F222 , F223 , F224 , F225
GY GY GY GY GY GY GY GY

REFER TO THE FOLLOWING.

F102 -SUPER MULTIPLE JUNCTION (SMJ)

M1 -FUSE BLOCK-JUNCTION BOX (J/B)

TBWM0264E

Specification data are reference values and are measured between each terminal and ground.
Pulse signal is measured by CONSULT-II.

CAUTION:
Do not use ECM ground terminals when measuring input/output voltage. Doing so may result in damage to the ECM's transistor. Use a ground other than ECM terminals, such as the ground.

TERMINAL NO.	WIRE COLOR	ITEM	CONDITION	DATA (DC Voltage)
21 22 23 40 41 42 44 63	W R P PU BR B OR G	Injector No. 5 Injector No. 3 Injector No. 1 Injector No. 6 Injector No. 4 Injector No. 2 Injector No. 7 Injector No. 8	**[Engine is running]** ● **Warm-up condition** ● Idle speed **NOTE:** The pulse cycle changes depending on rpm at idle	BATTERY VOLTAGE (11 - 14V)★ 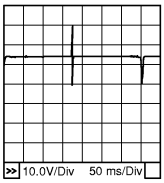 PBIB0042E
			[Engine is running] ● **Warm-up condition** ● Engine speed: 2,000 rpm	BATTERY VOLTAGE (11 - 14V)★ 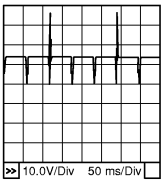 PBIB0043E

★: Average voltage for pulse signal (Actual pulse signal can be confirmed by oscilloscope.)

Diagnostic Procedure

ABS00E5T

1. INSPECTION START

Turn ignition switch to START.
Is any cylinder ignited?

Yes or No

Yes (With CONSULT-II)>>GO TO 2.
Yes (Without CONSULT-II)>>GO TO 3.
No >> GO TO 3.

2. CHECK OVERALL FUNCTION

With CONSULT-II

1. Start engine.
2. Perform “POWER BALANCE” in “ACTIVE TEST” mode with CONSULT-II.
3. Make sure that each circuit produces a momentary engine speed drop.

OK or NG

OK >> **INSPECTION END**
NG >> GO TO 3.

ACTIVE TEST	
POWER BALANCE	
MONITOR	
ENG SPEED	XXX rpm
MAS A/F SE-B1	XXX V

PBIB0133E

3. CHECK FUNCTION OF INJECTOR-I

1. Turn ignition switch OFF.
2. Disconnect harness connector F21, F201 (bank 1) and F41, F221 (bank 2).

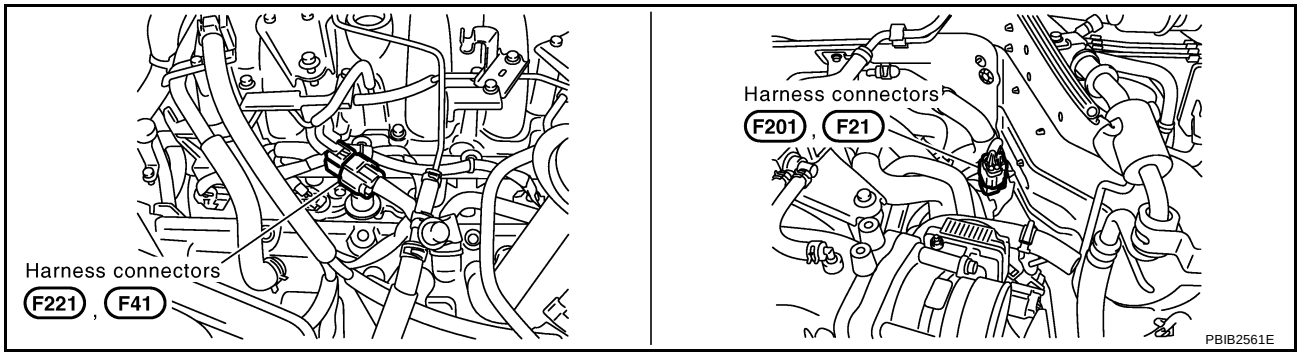

3. Turn ignition switch ON.
4. Check voltage between the following;
   harness connector F21 terminal 5 and ground,
   harness connector F41 terminal 5 and ground
   with CONSULT-II or tester.

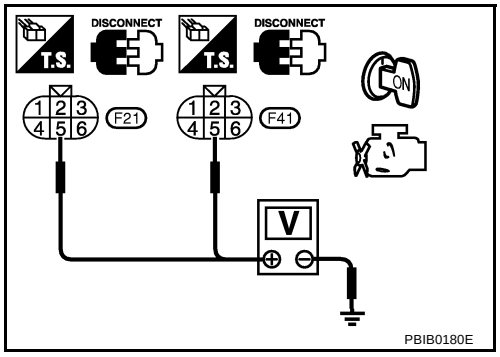

Voltage: Battery voltage

5. Turn ignition switch OFF.
6. Disconnect ECM harness connector.
7. Check harness continuity between the following terminals.

Cylinder	Harness connector terminal	ECM terminal
1	F21 terminal 3	23
3	F21 terminal 2	22
5	F21 terminal 1	21
7	F21 terminal 6	44
2	F41 terminal 3	42
4	F41 terminal 2	41
6	F41 terminal 1	40
8	F41 terminal 6	63

Continuity should exist.

8. Also check harness for short to ground and short to power.

OK or NG

OK >> GO TO 5.
NG >> GO TO 4.

4. DETECT MALFUNCTIONING PART

Check the following.

- Harness connectors M82, F102
- Harness connectors F21, F201
- Harness connectors F41, F221
- Fuse block (J/B) connector M1
- 15A fuse
- Harness for open or short between harness connector F21 and fuse
- Harness for open or short between harness connector F41 and fuse
- Harness for open or short between harness connector F21 and ECM
- Harness for open or short between harness connector F41 and ECM

>> Repair open circuit or short to ground or short to power in harness or connectors.

5. CHECK FUNCTION OF INJECTOR-II

Provide battery voltage between the following terminals, and then interrupt it. Listen to each injector operating sound.

Cylinder	Harness connector	terminal	
		(+)	(–)
1	F201	5	3
3			2
5			1
7			6
2	F221	5	3
4			2
6			1
8			6

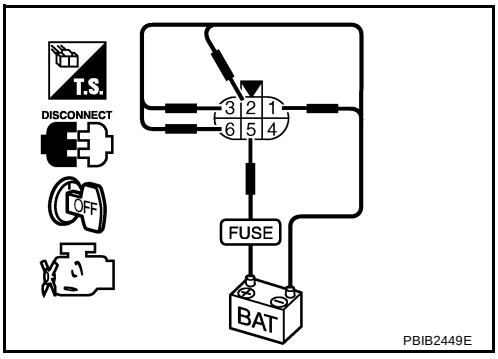

Operating sound should exist.

OK or NG

OK >> **INSPECTION END**
NG >> GO TO 6.

6. CHECK SUB-HARNESS CIRCUIT FOR OPEN AND SHORT

1. Disconnect injector harness connectors.

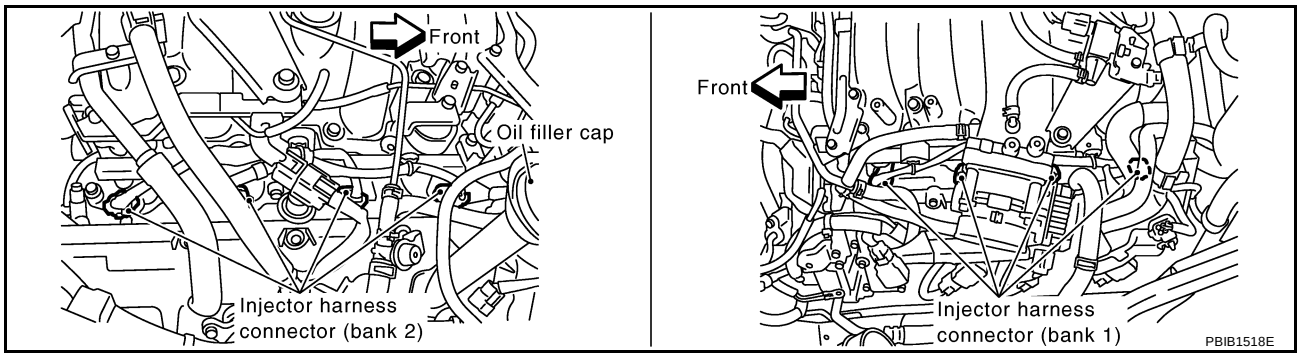

2. Check harness continuity between the following terminals. Refer to Wiring Diagram.

Harness connector terminal	Injector terminal
F201 terminal 1	2
F201 terminal 2	
F201 terminal 3	
F201 terminal 6	
F201 terminal 5	1
F221 terminal 1	2
F221 terminal 2	
F221 terminal 3	
F221 terminal 6	
F221 terminal 5	1

Continuity should exist.

3. Also check harness for short to ground and short to power.

OK or NG

OK >> GO TO 7.
NG >> Repair open circuit or short to ground or short to power in harness or connectors.

7. CHECK INJECTOR

Refer to EC-1357, "Component Inspection" .

OK or NG

OK >> GO TO 8.
NG >> Replace injector.

8. CHECK INTERMITTENT INCIDENT

Refer to EC-854, "TROUBLE DIAGNOSIS FOR INTERMITTENT INCIDENT" .

>> **INSPECTION END**

Component Inspection

ABS00E5U

INJECTOR

1. Disconnect injector harness connector.
2. Check resistance between terminals as shown in the figure.

Resistance: 13.5 - 17.5Ω [at 10 - 60°C (50 - 140°F)]

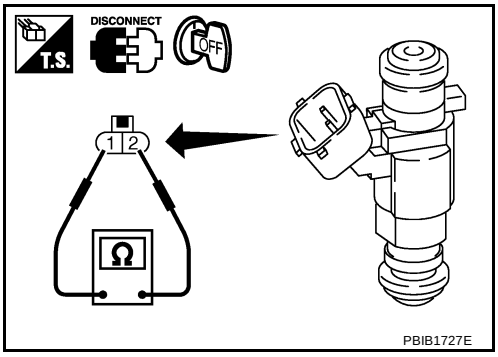

Removal and Installation

ABS007X0

INJECTOR

Refer to EM-192, "FUEL INJECTOR AND FUEL TUBE" .

FUEL PUMP CIRCUIT

PFP:17042

Description

ABS007X1

SYSTEM DESCRIPTION

Sensor	Input signal to ECM	ECM Function	Actuator
Crankshaft position sensor (POS) Camshaft position sensor (PHASE)	Engine speed*	Fuel pump control	Fuel pump relay
Battery	Battery voltage*		

*: ECM determines the start signal status by the signals of engine speed and battery voltage.

The ECM activates the fuel pump for several seconds after the ignition switch is turned ON to improve engine startability. If the ECM receives a engine speed signal from the camshaft position sensor (PHASE), it knows that the engine is rotating, and causes the pump to operate. If the engine speed signal is not received when the ignition switch is ON, the engine stalls. The ECM stops pump operation and prevents battery discharging, thereby improving safety. The ECM does not directly drive the fuel pump. It controls the ON/OFF fuel pump relay, which in turn controls the fuel pump.

Condition	Fuel pump operation
Ignition switch is turned to ON.	Operates for 1 second.
Engine running and cranking	Operates.
When engine is stopped	Stops in 1.5 seconds.
Except as shown above	Stops.

COMPONENT DESCRIPTION

A turbine type design fuel pump is used in the fuel tank.

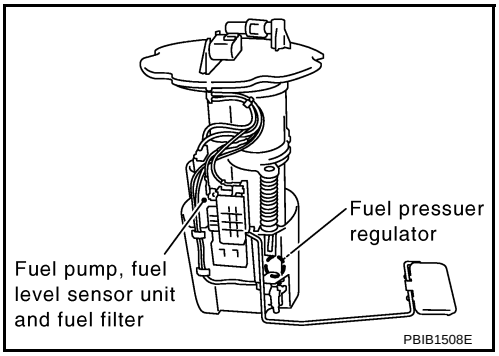

CONSULT-II Reference Value in Data Monitor Mode

ABS007X2

Specification data are reference values.

MONITOR ITEM	CONDITION	SPECIFICATION
FUEL PUMP RLY	● For 1 seconds after turning ignition switch: ON ● Engine running or cranking	ON
	● Except above	OFF

Wiring Diagram

ABS007X3

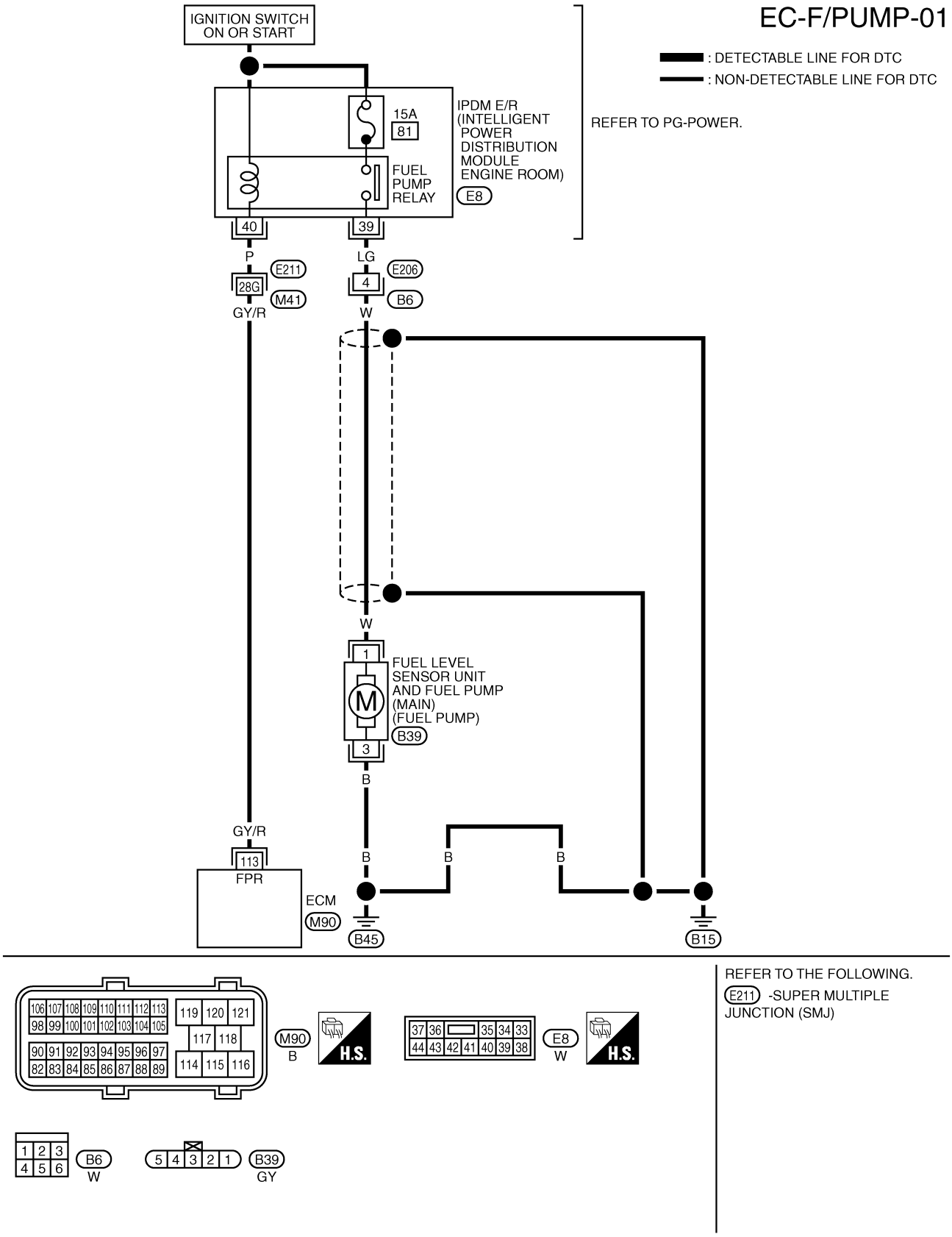

Specification data are reference values and are measured between each terminal and ground.

CAUTION:

Do not use ECM ground terminals when measuring input/output voltage. Doing so may result in damage to the ECM's transistor. Use a ground other than ECM terminals, such as the ground.

TERMINAL NO.	WIRE COLOR	ITEM	CONDITION	DATA (DC Voltage)
113	GY/R	Fuel pump relay	**[Ignition switch: ON]** ● For 1 second after turning ignition switch ON **[Engine is running]**	0 - 1.5V
			[Ignition switch: ON] ● More than 1 second after turning ignition switch ON	BATTERY VOLTAGE (11 - 14V)

Diagnostic Procedure

ABS007X4

1. CHECK OVERALL FUNCTION

1. Turn ignition switch ON.
2. Pinch fuel feed hose with two fingers.
   Fuel pressure pulsation should be felt on the fuel feed hose for 1 second after ignition switch is turned ON.

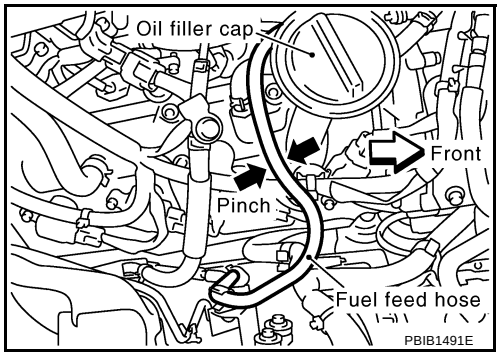

OK or NG

OK >> **INSPECTION END**
NG >> GO TO 2.

2. CHECK FUEL PUMP POWER SUPPLY CIRCUIT-I

1. Turn ignition switch OFF.
2. Disconnect ECM harness connector.
3. Turn ignition switch ON.
4. Check voltage between ECM terminal 113 and ground with CONSULT-II or tester.

Voltage: Battery voltage

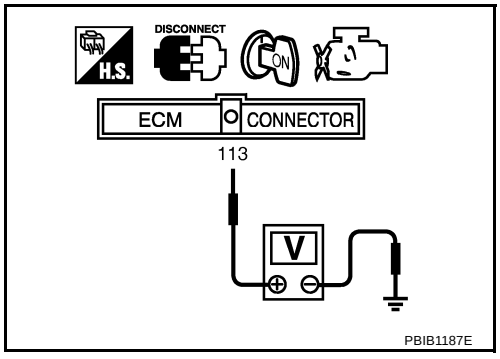

OK or NG

OK >> GO TO 5.
NG >> GO TO 3.

3. CHECK FUEL PUMP POWER SUPPLY CIRCUIT-II

1. Turn ignition switch OFF.
2. Disconnect IPDM E/R harness connector E8.
3. Turn ignition switch ON.
4. Check voltage between IPDM E/R terminal 40 and ground with CONSULT-II or tester.

Voltage: Battery voltage

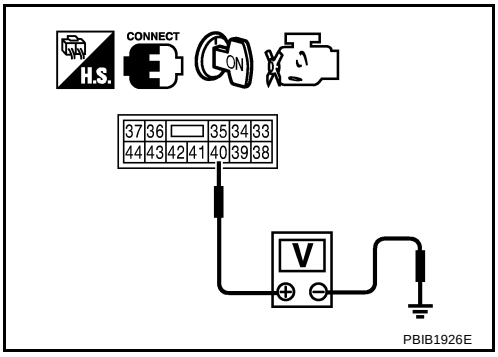

OK or NG

OK >> GO TO 4.
NG >> GO TO 11.

4. DETECT MALFUNCTIONING PART

Check the following.

- Harness connectors E211, M41
- Harness for open or short between IPDM E/R and ECM

>> Repair open circuit or short to ground or short to power in harness or connectors.

5. CHECK FUEL PUMP POWER SUPPLY CIRCUIT-III

1. Turn ignition switch OFF.
2. Reconnect all harness connectors disconnected.
3. Disconnect “fuel level sensor unit and fuel pump” harness connector.
4. Turn ignition switch ON.

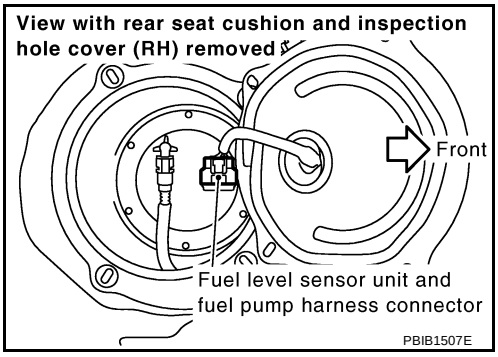

5. Check voltage between “fuel level sensor unit and fuel pump” terminal 1 and ground with CONSULT-II or tester.

Voltage: Battery voltage should exist for 1 second after ignition switch is turned ON.

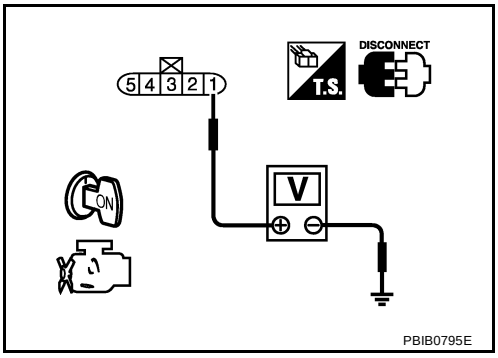

OK or NG

OK >> GO TO 9.
NG >> GO TO 6.

6. CHECK 15A FUSE

1. Turn ignition switch OFF.
2. Disconnect 15A fuse.
3. Check 15A fuse.

OK or NG

OK >> GO TO 7.
NG >> Replace fuse.

7. CHECK FUEL PUMP POWER SUPPLY CIRCUIT-IV

1. Disconnect IPDM E/R harness connector E8.
2. Check harness continuity between IPDM E/R terminal 39 and “fuel level sensor unit and fuel pump” terminal 1.
   Refer to Wiring Diagram.

   Continuity should exist.

3. Also check harness for short to ground and short to power.

OK or NG

OK >> GO TO 11.
NG >> GO TO 8.

8. DETECT MALFUNCTIONING PART

Check the following.

- Harness connectors E206, B6
- Harness for open or short between IPDM E/R and “fuel level sensor unit and fuel pump”

>> Repair harness or connectors.

9. CHECK FUEL PUMP GROUND CIRCUIT FOR OPEN AND SHORT

1. Check harness continuity between “fuel level sensor unit and fuel pump” terminal 3 and ground.
   Refer to Wiring Diagram.

   Continuity should exist.

2. Also check harness for short to power.

OK or NG

OK >> GO TO 10.
NG >> Repair open circuit or short to power in harness or connectors.

10. CHECK FUEL PUMP

Refer to EC-1363, "Component Inspection" .

OK or NG

OK >> GO TO 11.
NG >> Replace fuel pump.

11. CHECK INTERMITTENT INCIDENT

Refer to EC-854, "TROUBLE DIAGNOSIS FOR INTERMITTENT INCIDENT" .

OK or NG

OK >> Replace IPDM E/R.
NG >> Repair or replace harness or connectors.

Component Inspection

ABS007X5

FUEL PUMP

1. Disconnect “fuel level sensor unit and fuel pump” harness connector.
2. Check resistance between “fuel level sensor unit and fuel pump” terminals 1 and 3.

Resistance: 0.2 - 5.0Ω [at 25°C (77°F)]

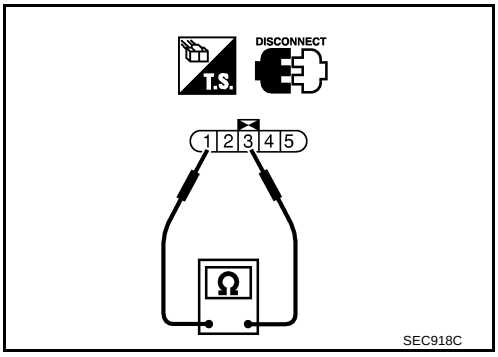

Removal and Installation

ABS007X6

FUEL PUMP

Refer to FL-4, "FUEL LEVEL SENSOR UNIT, FUEL FILTER AND FUEL PUMP ASSEMBLY" .

REFRIGERANT PRESSURE SENSOR

PFP:92136

Component Description

ABS007X7

The refrigerant pressure sensor is installed at the condenser of the air conditioner system. The sensor uses an electrostatic volume pressure transducer to convert refrigerant pressure to voltage. The voltage signal is sent to ECM, and ECM controls cooling fan system.

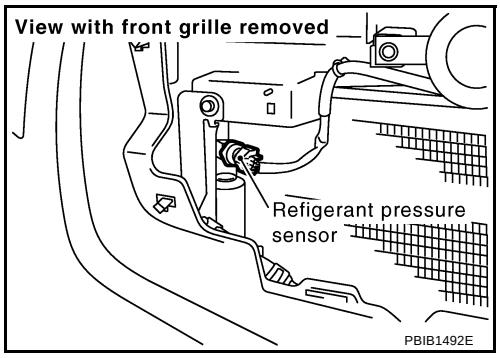

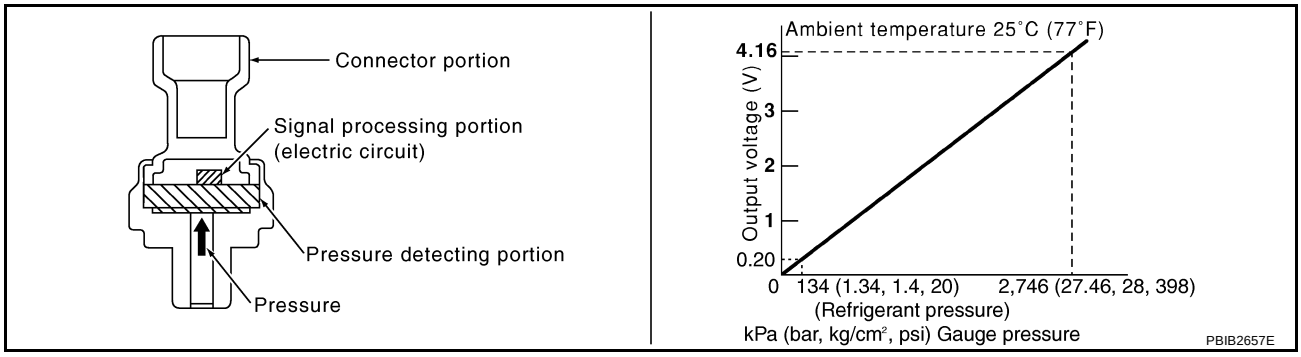

Wiring Diagram

ABS007X8

EC-RP/SEN-01

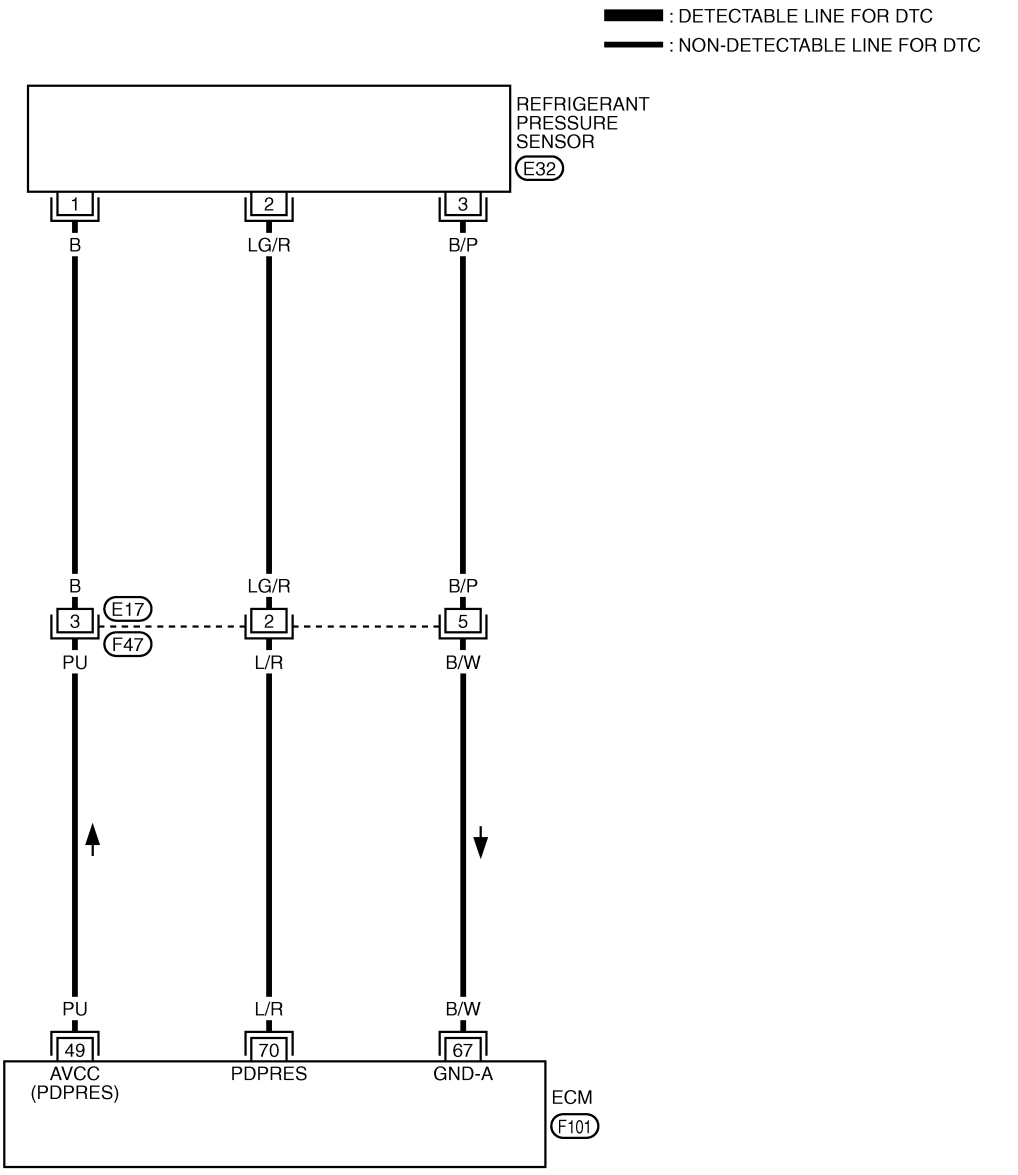

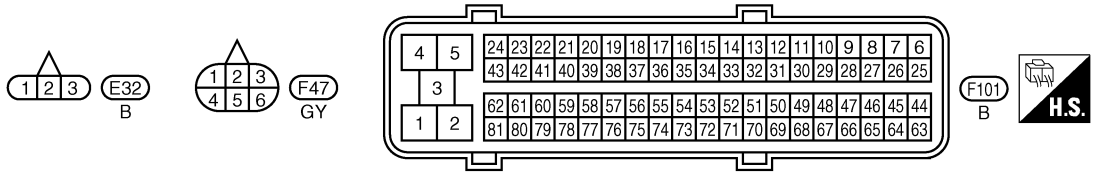

TBWM0265E

Specification data are reference values and are measured between each terminal and ground.

CAUTION:

Do not use ECM ground terminals when measuring input/output voltage. Doing so may result in damage to the ECM's transistor. Use a ground other than ECM terminals, such as the ground.

TERMINAL NO.	WIRE COLOR	ITEM	CONDITION	DATA (DC Voltage)
49	PU	Sensor power supply (Refrigerant pressure sensor)	**[Ignition switch: ON]**	Approximately 5V
67	B/W	Sensor ground	**[Engine is running]** ● **Warm-up condition** ● Idle speed	Approximately 0V
70	L/R	Refrigerant pressure sensor	**[Engine is running]** ● **Warm-up condition** ● Both A/C switch and blower fan motor switch: ON (Compressor operates)	1.0 - 4.0V

Diagnostic Procedure

ABS007X9

1. CHECK REFRIGERANT PRESSURE SENSOR OVERALL FUNCTION

1. Start engine and warm it up to normal operating temperature.
2. Turn A/C switch and blower switch ON.
3. Check voltage between ECM terminal 70 and ground with CONSULT-II or tester.

Voltage: 1.0 - 4.0V

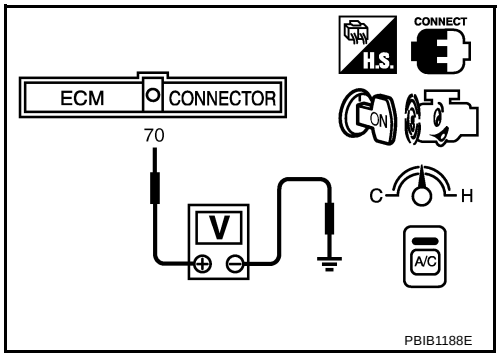

OK or NG

OK >> **INSPECTION END**
NG >> GO TO 2.

2. CHECK GROUND CONNECTIONS

1. Turn ignition switch OFF.
2. Loosen and retighten three ground screws on the body.
   Refer to EC-861, "Ground Inspection" .

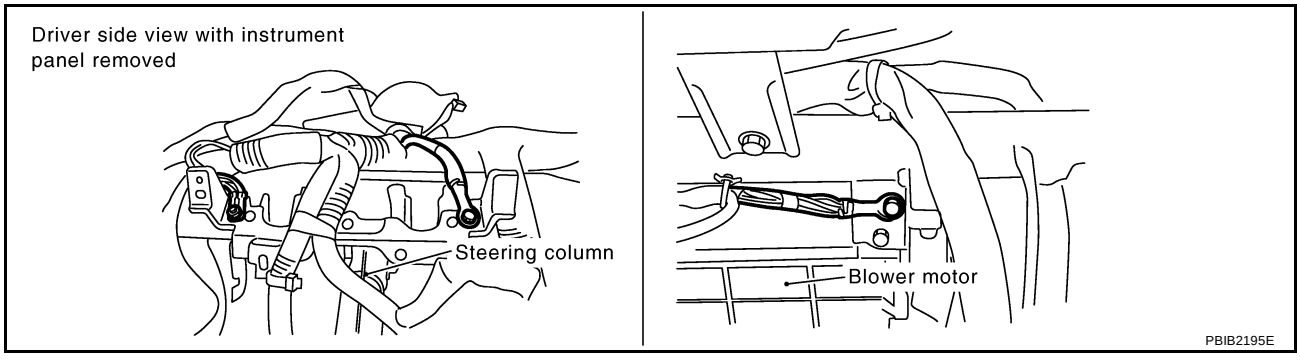

OK or NG

OK >> GO TO 3.
NG >> Repair or replace ground connections.

3. CHECK REFRIGERANT PRESSURE SENSOR POWER SUPPLY CIRCUIT

1. Disconnect refrigerant pressure sensor harness connector.
2. Turn ignition switch ON.

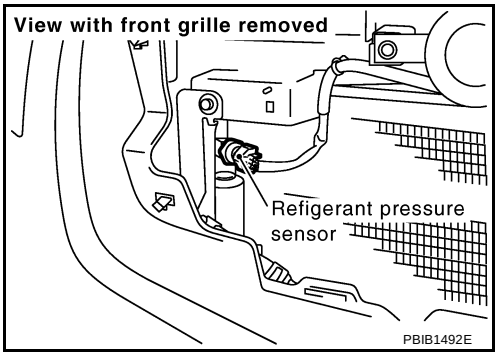

3. Check voltage between refrigerant pressure sensor terminal 1 and ground with CONSULT-II or tester.

Voltage: Approximately 5V

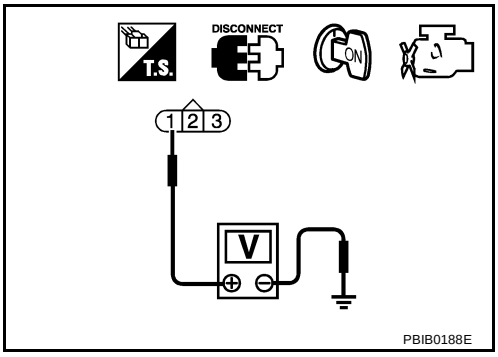

OK or NG

OK >> GO TO 5.
NG >> GO TO 4.

4. DETECT MALFUNCTIONING PART

Check the following.

- Harness connectors E17, F47
- Harness for open or short between ECM and refrigerant pressure sensor

>> Repair open circuit or short to ground or short to power in harness or connectors.

5. CHECK REFRIGERANT PRESSURE SENSOR GROUND CIRCUIT FOR OPEN AND SHORT

1. Turn ignition switch OFF.
2. Disconnect ECM harness connector.
3. Check harness continuity between refrigerant pressure sensor terminal 3 and ECM terminal 67. Refer to Wiring Diagram.

Continuity should exist.

4. Also check harness for short to ground and short to power.

OK or NG

OK >> GO TO 7.
NG >> GO TO 6.

6. DETECT MALFUNCTIONING PART

Check the following.

- Harness connectors E17, F47
- Harness for open or short between ECM and refrigerant pressure sensor

>> Repair open circuit or short to ground or short to power in harness or connectors.

7. CHECK REFRIGERANT PRESSURE SENSOR INPUT SIGNAL CIRCUIT FOR OPEN AND SHORT

1. Check harness continuity between ECM terminal 70 and refrigerant pressure sensor terminal 2. Refer to Wiring Diagram.

   Continuity should exist.

2. Also check harness for short to ground and short to power.

OK or NG

OK >> GO TO 9.
NG >> GO TO 8.

8. DETECT MALFUNCTIONING PART

Check the following.

- Harness connectors E17, F47
- Harness for open or short between ECM and refrigerant pressure sensor

>> Repair open circuit or short to ground or short to power in harness or connectors.

9. CHECK INTERMITTENT INCIDENT

Refer to EC-854, "TROUBLE DIAGNOSIS FOR INTERMITTENT INCIDENT" .

OK or NG

OK >> Replace refrigerant pressure sensor.
NG >> Repair or replace.

Removal and Installation

ABS007XA

REFRIGERANT PRESSURE SENSOR

Refer to ATC-156, "Removal and Installation of Refrigerant Pressure Sensor" .

ELECTRICAL LOAD SIGNAL

PFP:25350

Description

ABS007XB

The electrical load signal (Headlamp switch signal, rear window defogger switch signal, etc.) is transferred through the CAN communication line from BCM to ECM via IPDM E/R.

CONSULT-II Reference Value in Data Monitor Mode

ABS007XC

Specification data are reference values.

MONITOR ITEM	CONDITION		SPECIFICATION
LOAD SIGNAL	● Ignition switch: ON	Rear window defogger switch: ON and/or Lighting switch: 2ND position	ON
		Rear window defogger switch and lighting switch: OFF	OFF

Diagnostic Procedure

ABS007XD

1. CHECK LOAD SIGNAL CIRCUIT OVERALL FUNCTION-I

1. Turn ignition switch ON.
2. Connect CONSULT-II and select “DATA MONITOR” mode.
3. Select “LOAD SIGNAL” and check indication under the following conditions.

Condition	Indication
Rear window defogger switch: ON	ON
Rear window defogger switch: OFF	OFF

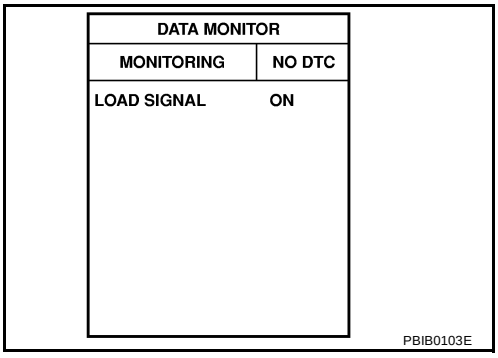

OK or NG

OK >> GO TO 2.
NG >> GO TO 3.

2. CHECK LOAD SIGNAL CIRCUIT OVERALL FUNCTION-II

Check “LOAD SIGNAL” indication under the following conditions.

Condition	Indication
Lighting switch: ON at 2nd position	ON
Lighting switch: OFF	OFF

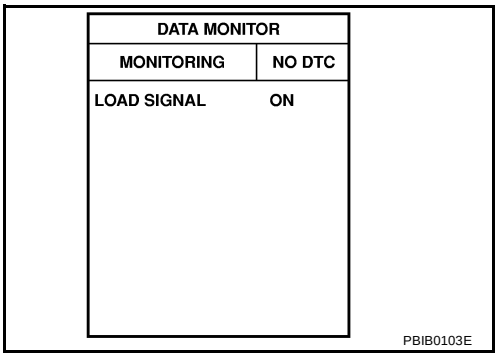

OK or NG

OK >> **INSPECTION END**
NG >> GO TO 4.

3. CHECK REAR WINDOW DEFOGGER SYSTEM

Refer to GW-86, "REAR WINDOW DEFOGGER" .

>> **INSPECTION END**

4. CHECK HEADLAMP SYSTEM

Refer to LT-7, "HEADLAMP - XENON TYPE -" .

>> **INSPECTION END**

ICC BRAKE SWITCH

PFP:25320

Component Description

ABS00DCI

When depress on the brake pedal, ICC brake switch is turned OFF and stop lamp switch is turned ON. ECM detects the state of the brake pedal by this input of two kinds (ON/OFF signal)
Refer to ACS-6, "DESCRIPTION" for the ICC function.

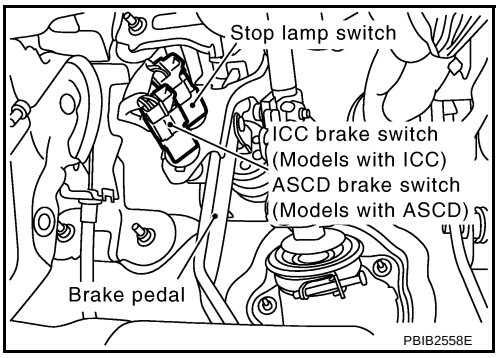

CONSULT-II Reference Value in Data Monitor Mode

ABS00DCJ

Specification data are reference values.

MONITOR ITEM	CONDITION		SPECIFICATION
BRAKE SW1 (ICC brake switch)	● Ignition switch: ON	Brake pedal: Fully released	ON
		Brake pedal: Slightly depressed	OFF
BRAKE SW2 (stop lamp switch)	● Ignition switch: ON	Brake pedal: Fully released	OFF
		Brake pedal: Slightly depressed	ON

Wiring Diagram

ABS00DCK

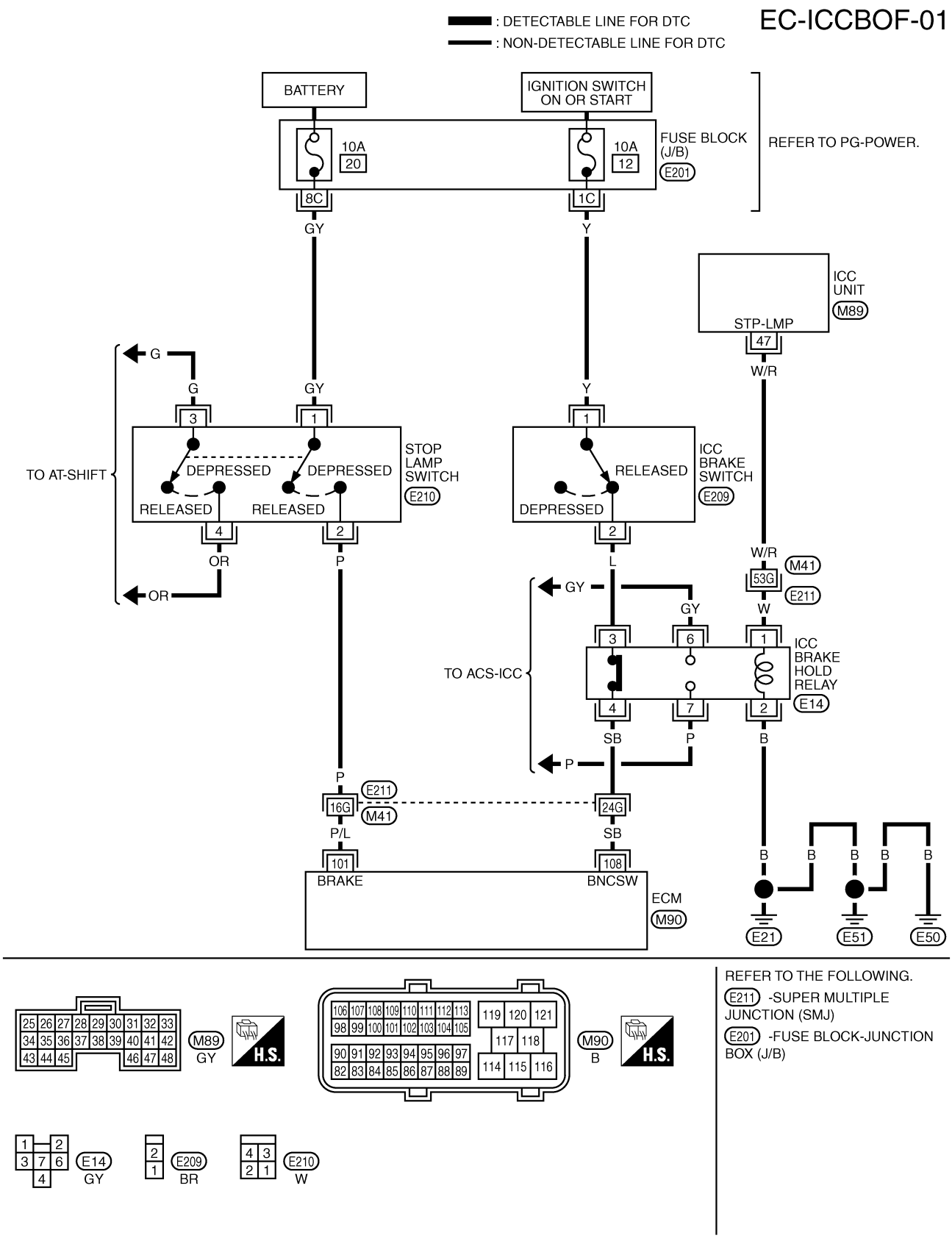

Specification data are reference values and are measured between each terminal and ground.

CAUTION:

Do not use ECM ground terminals when measuring input/output voltage. Doing so may result in damage to the ECM's transistor. Use a ground other than ECM terminals, such as the ground.

TERMINAL NO.	WIRE COLOR	ITEM	CONDITION	DATA (DC Voltage)
101	P/L	Stop lamp switch	**[Ignition switch: OFF]** ● Brake pedal: Fully released	Approximately 0V
			[Ignition switch: OFF] ● Brake pedal: Slightly depressed	BATTERY VOLTAGE (11 - 14V)
108	SB	ICC brake switch	**[Ignition switch: ON]** ● Brake pedal: Slightly depressed	Approximately 0V
			[Ignition switch: ON] ● Brake pedal: Fully released	BATTERY VOLTAGE (11 - 14V)

Diagnostic Procedure

ABS00DCL

1. CHECK OVERALL FUNCTION-I

With CONSULT-II

1. Turn ignition switch ON.
2. Select “BRAKE SW1” in “DATA MONITOR” mode with CONSULT-II.
3. Check “BRAKE SW1” indication under the following conditions.

CONDITION	INDICATION
When brake pedal: Slightly depress	OFF
When brake pedal: Fully released	ON

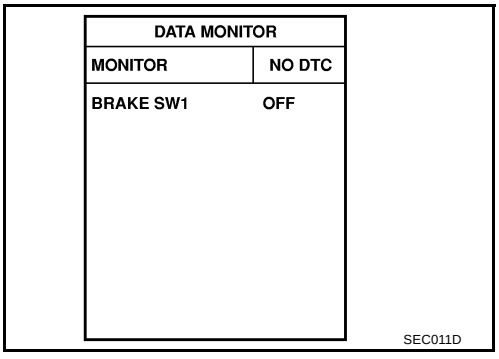

Without CONSULT-II

1. Turn ignition switch ON.
2. Check voltage between ECM terminal 108 and ground under the following conditions.

CONDITION	VOLTAGE
When brake pedal: Slightly depress	Approximately 0V
When brake pedal: Fully released	Battery voltage

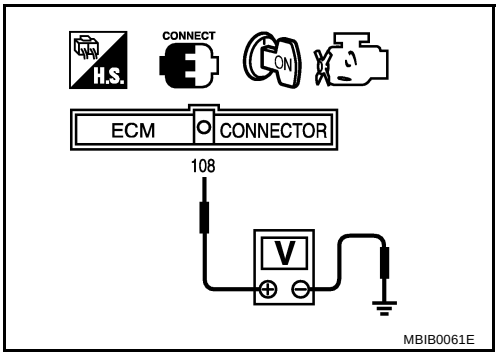

OK or NG

OK >> GO TO 2.
NG >> GO TO 3.

2. CHECK OVERALL FUNCTION-II

With CONSULT-II

Check “BRAKE SW2” indication in “DATA MONITOR” mode.

CONDITION	INDICATION
When brake pedal: Fully released	OFF
When brake pedal: Slightly depressed	ON

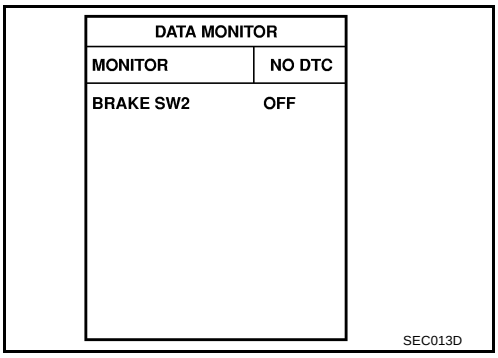

Without CONSULT-II

Check voltage between ECM terminal 101 and ground under the following conditions.

CONDITION	VOLTAGE
When brake pedal: Fully released	Approximately 0V
When brake pedal: Slightly depressed	Battery voltage

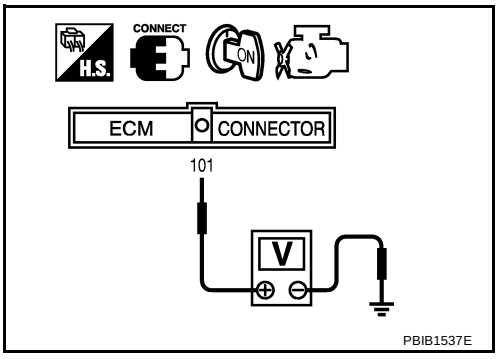

OK or NG

OK >> **INSPECTION END**
NG >> GO TO 12.

3. CHECK DTC WITH ICC UNIT

Refer to ACS-41, "TROUBLE DIAGNOSIS FOR SELF-DIAGNOSTIC ITEMS" .

OK or NG

OK >> GO TO 4.
NG >> Repair or replace.

4. CHECK ICC BRAKE SWITCH CIRCUIT

1. Turn ignition switch OFF.
2. Disconnect ICC brake hold relay.
3. Turn ignition switch ON.

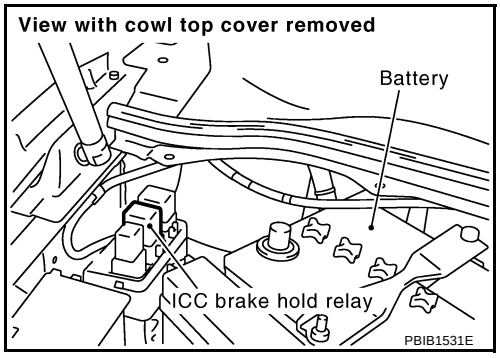

4. Check voltage between ICC brake hold relay terminal 3 and ground with CONSULT-II or tester.

Voltage: Battery voltage

OK or NG

OK >> GO TO 9.
NG >> GO TO 5.

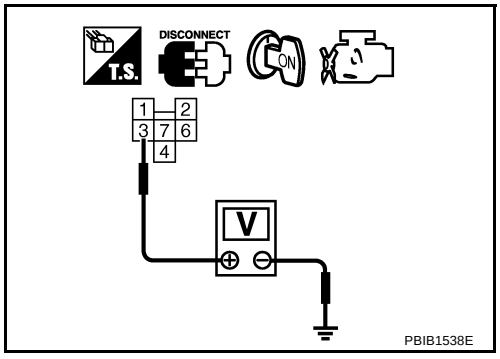

5. CHECK ICC BRAKE SWITCH POWER SUPPLY CIRCUIT

1. Turn ignition switch OFF.
2. Disconnect ICC brake switch harness connector.
3. Turn ignition switch ON.

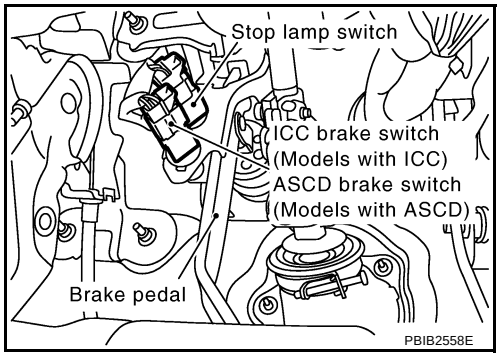

4. Check voltage between ICC brake switch terminal 1 and ground with CONSULT-II or tester.

Voltage: Battery voltage

OK or NG

OK >> GO TO 7.
NG >> GO TO 6.

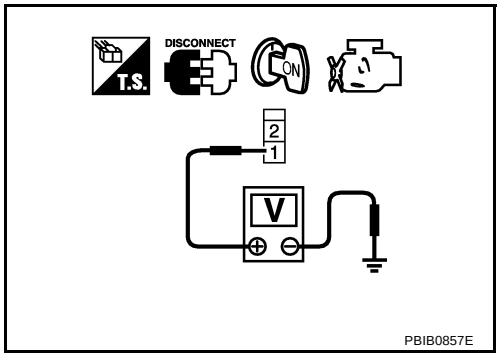

6. DETECT MALFUNCTIONING PART

Check the following.

- Fuse block (J/B) connector M201
- 10A fuse
- Harness for open or short between ICC brake switch and fuse

>> Repair open circuit or short to ground or short to power in harness or connectors.

7. CHECK ICC BRAKE SWITCH INPUT SIGNAL CIRCUIT FOR OPEN AND SHORT-I

1. Turn ignition switch OFF.
2. Check harness continuity between ICC brake hold relay terminal 3 and ICC brake switch terminal 2. Refer to Wiring Diagram.

Continuity should exist.

3. Also check harness for short to ground and short to power.

OK or NG

OK >> GO TO 8.
NG >> Repair open circuit or short to ground or short to power in harness or connectors.

8. CHECK ICC BRAKE SWITCH

Refer to EC-1377, "Component Inspection" .

OK or NG

OK >> GO TO 17.
NG >> Replace ICC brake switch.

9. CHECK ICC BRAKE SWITCH INPUT SIGNAL CIRCUIT FOR OPEN AND SHORT-II

1. Turn ignition switch OFF.
2. Disconnect ECM harness connector.
3. Check harness continuity between ICC brake hold relay terminal 4 and ECM terminal 108. Refer Wiring Diagram.

Continuity should exist.

4. Also check harness for short to ground and short to power.

OK or NG

OK >> GO TO 11.
NG >> GO TO 10.

10. DETECT MALFUNCTIONING PART

Check the following.

- Harness connectors E211, M41
- Harness for open or short between ICC brake hold relay and ECM

>> Repair open circuit or short to ground or short to power in harness or connectors.

11. CHECK ICC BRAKE HOLD RELAY

Refer to EC-1377, "Component Inspection" .

OK >> GO TO 17.
NG >> Replace ICC brake fold relay.

12. CHECK STOP LAMP SWITCH POWER SUPPLY CIRCUIT

1. Turn ignition switch OFF.
2. Disconnect stop lamp switch harness connector.

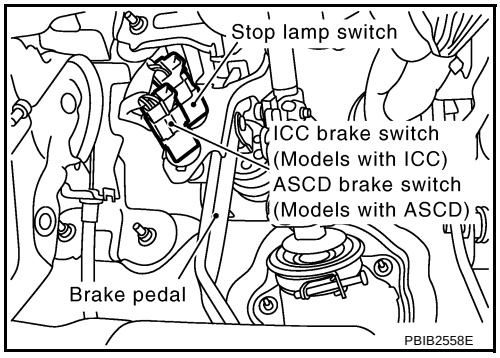

3. Check voltage between stop lamp switch terminal 1 and ground with CONSULT -II or tester.

Voltage: Battery voltage

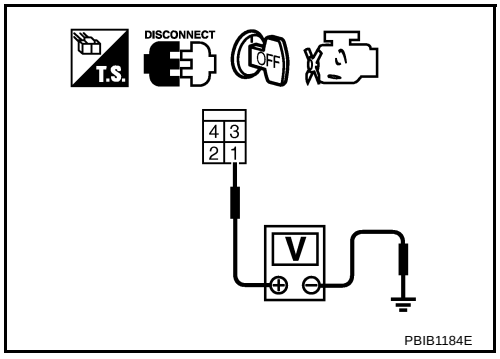

OK or NG

OK >> GO TO 14.
NG >> GO TO 13.

13. DETECT MALFUNCTIONING PART

Check the following.

- Fuse block (J/B) connector E201
- 10A fuse
- Harness for open or short between stop lamp switch and battery

>> Repair open circuit or short to ground or short to power in harness or connectors.

14. CHECK STOP LAMP SWITCH INPUT SIGNAL CIRCUIT FOR OPEN AND SHORT

1. Disconnect ECM harness connector.
2. Check harness continuity between ECM terminal 101 and stop lamp switch terminal 2. Refer to Wiring Diagram.

Continuity should exist.

3. Also check harness for short to ground and short to power.

OK or NG

OK >> GO TO 16.
NG >> GO TO 15.

15. DETECT MALFUNCTIONING PART

Check the following.

- Harness connectors E211, M41
- Harness for open or short between ECM and stop lamp switch

>> Repair open circuit or short to ground or short to power in harness or connectors.

16. CHECK STOP LAMP SWITCH

Refer to EC-1377, "Component Inspection"

OK or NG

OK >> GO TO 17.
NG >> Replace stop lamp switch.

17. CHECK INTERMITTENT INCIDENT

Refer to EC-854, "TROUBLE DIAGNOSIS FOR INTERMITTENT INCIDENT" .

>> **INSPECTION END**

Component Inspection

ABS00DCM

ICC BRAKE SWITCH

1. Turn ignition switch OFF.
2. Disconnect ICC brake switch harness connector.
3. Check continuity between ICC brake switch terminals 1 and 2 under the following conditions.

Condition	Continuity
When brake pedal: Fully released.	Should exist.
When brake pedal: Slightly depressed.	Should not exist.

4. If NG, adjust ICC brake switch installation, refer to BR-6, "BRAKE PEDAL" , and perform step 3 again.

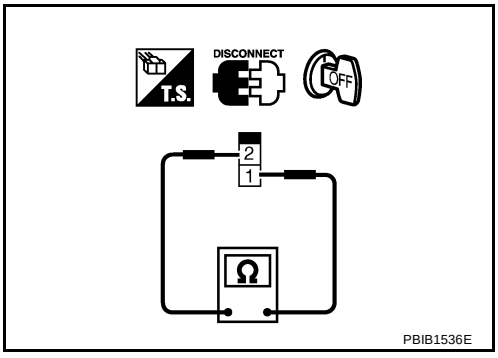

STOP LAMP SWITCH

1. Turn ignition switch OFF.
2. Disconnect stop lamp switch harness connector.
3. Check continuity between stop lamp switch terminals 1 and 2 under the following conditions.

Condition	Continuity
When brake pedal: Fully released.	Should not exist.
When brake pedal: Slightly depressed.	Should exist.

4. If NG, adjust stop lamp switch installation, refer to BR-6, "BRAKE PEDAL" , and perform step 3 again.

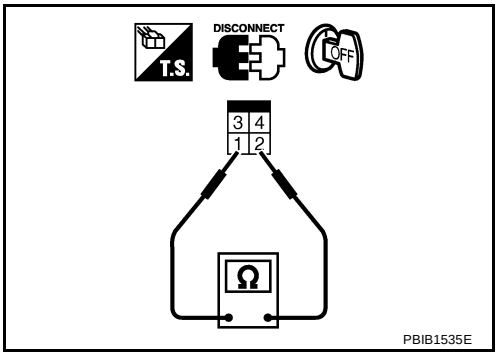

ICC BRAKE HOLD RELAY

1. Apply 12V direct current between ICC brake hold relay terminals 1 and 2.
2. Check continuity between relay terminals 3 and 4, 6 and 7 under the following conditions.

Condition	Between terminals	Continuity
12V direct current supply between terminals 1 and 2	3 and 4	Should not exist
	6 and 7	Should exist
No current supply	3 and 4	Should exist
	6 and 7	Should not exist

3. If NG, replace ICC brake hold relay.

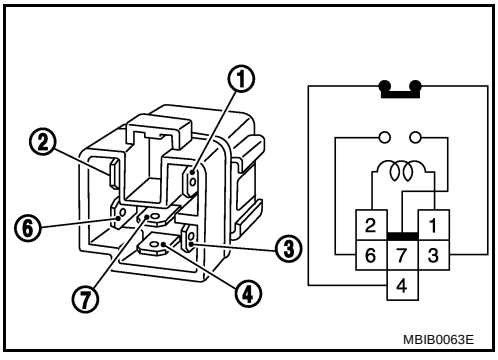

ASCD BRAKE SWITCH

PFP:25320

Component Description

ABS007XJ

When the brake pedal is depressed, ASCD brake switch is turned OFF and stop lamp switch is turned ON. ECM detects the state of the brake pedal by this input of two kinds (ON/OFF signal).
Refer to EC-727, "AUTOMATIC SPEED CONTROL DEVICE (ASCD)" for the ASCD function.

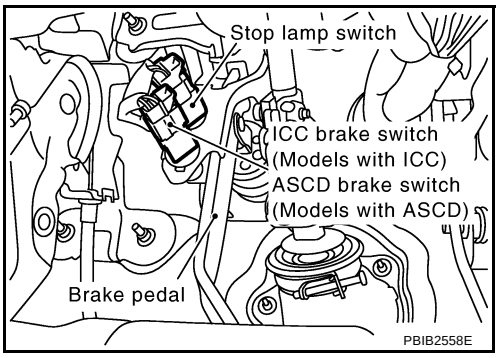

CONSULT-II Reference Value in Data Monitor Mode

ABS007XK

Specification data are reference values.

MONITOR ITEM	CONDITION		SPECIFICATION
BRAKE SW1 (ASCD brake switch)	● Ignition switch: ON	Brake pedal: Fully released	ON
		Brake pedal: Slightly depressed	OFF
BRAKE SW2 (stop lamp switch)	● Ignition switch: ON	Brake pedal: Fully released	OFF
		Brake pedal: Slightly depressed	ON

Wiring Diagram

ABS007XL

EC-ASCBOF-01

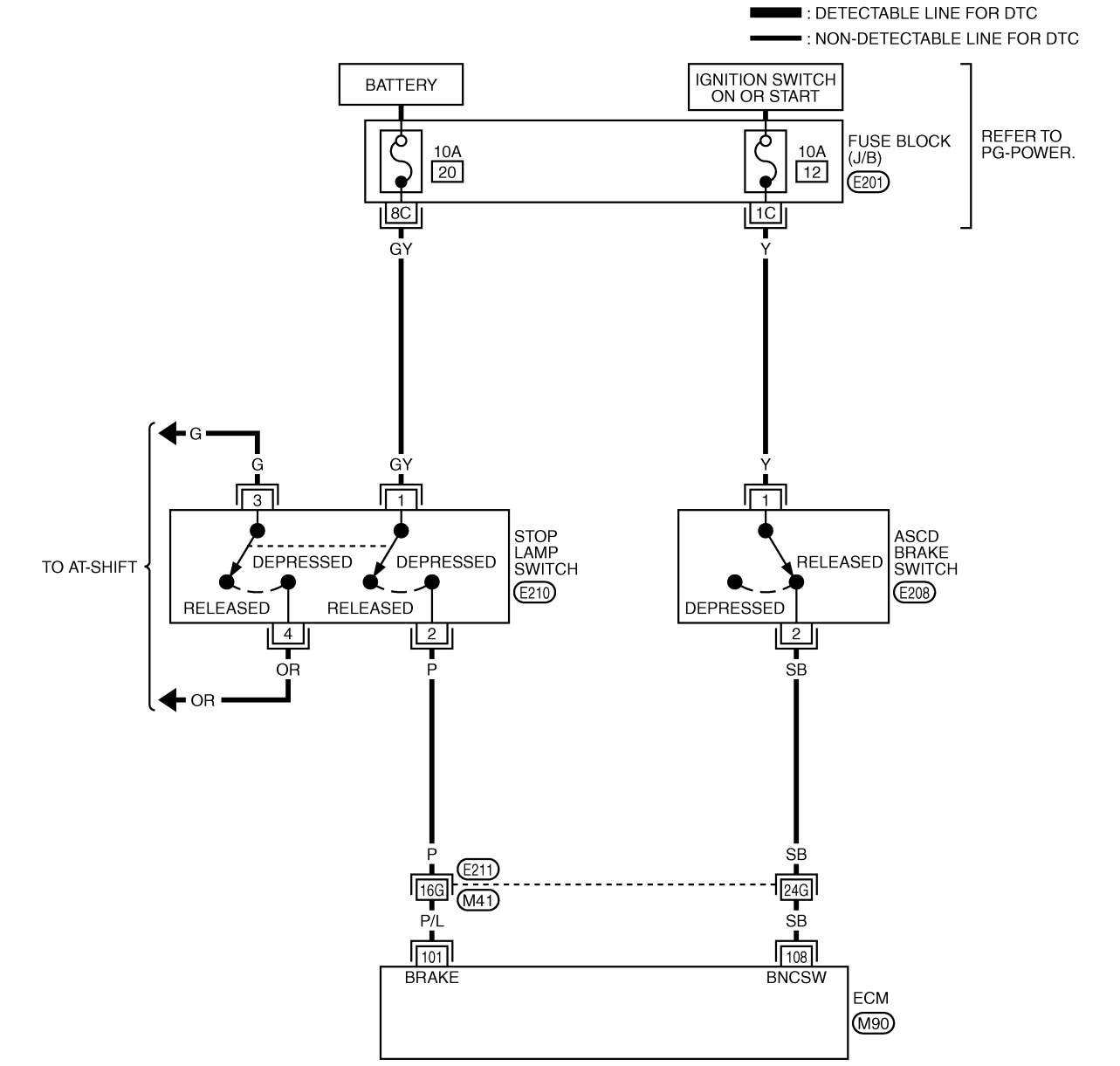

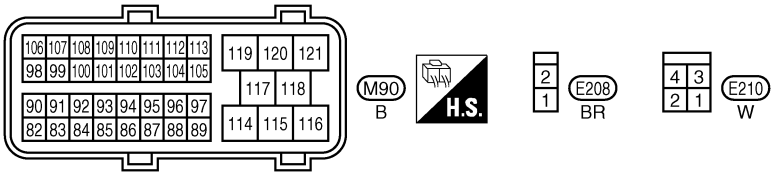

REFER TO THE FOLLOWING.

E211 -SUPER MULTIPLE JUNCTION (SMJ)

E201 -FUSE BLOCK-JUNCTION BOX (J/B)

TBWM0426E

Specification data are reference values and are measured between each terminal and ground.

CAUTION:

Do not use ECM ground terminals when measuring input/output voltage. Doing so may result in damage to the ECM's transistor. Use a ground other than ECM terminals, such as the ground.

TERMINAL NO.	WIRE COLOR	ITEM	CONDITION	DATA (DC Voltage)
101	P/L	Stop lamp switch	**[Ignition switch: OFF]** ● Brake pedal: Fully released	Approximately 0V
			[Ignition switch: OFF] ● Brake pedal: Slightly depressed	BATTERY VOLTAGE (11 - 14V)
108	SB	ASCD brake switch	**[Ignition switch: ON]** ● Brake pedal: Slightly depressed	Approximately 0V
			[Ignition switch: ON] ● Brake pedal: Fully released	BATTERY VOLTAGE (11 - 14V)

Diagnostic Procedure

ABS007XM

1. CHECK OVERALL FUNCTION-I

With CONSULT-II

1. Turn ignition switch ON.
2. Select “BRAKE SW1” in “DATA MONITOR” mode with CONSULT-II.
3. Check “BRAKE SW1” indication under the following conditions.

CONDITION	INDICATION
When brake pedal: Slightly depressed	OFF
When brake pedal: Fully released	ON

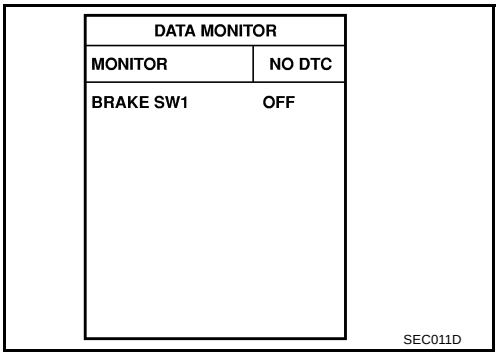

Without CONSULT-II

1. Turn ignition switch ON.
2. Check voltage between ECM terminal 108 and ground under the following conditions.

CONDITION	VOLTAGE
When brake pedal: Slightly depressed	Approximately 0V
When brake pedal: Fully released	Battery voltage

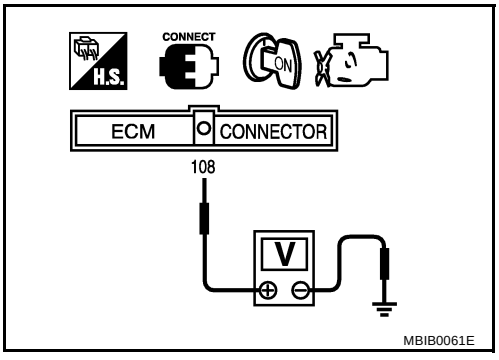

OK or NG

OK >> GO TO 2.
NG >> GO TO 3.

2. CHECK OVERALL FUNCTION-II

With CONSULT-II

Check “BRAKE SW2” indication in “DATA MONITOR” mode.

CONDITION	INDICATION
When brake pedal: Fully released	OFF
When brake pedal: Slightly depressed	ON

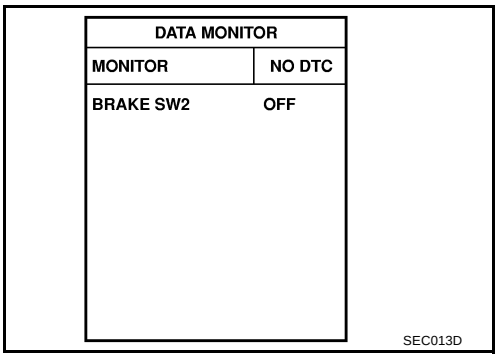

Without CONSULT-II

Check voltage between ECM terminal 101 and ground under the following conditions.

CONDITION	VOLTAGE
When brake pedal: Fully released	Approximately 0V
When brake pedal: Slightly depressed	Battery voltage

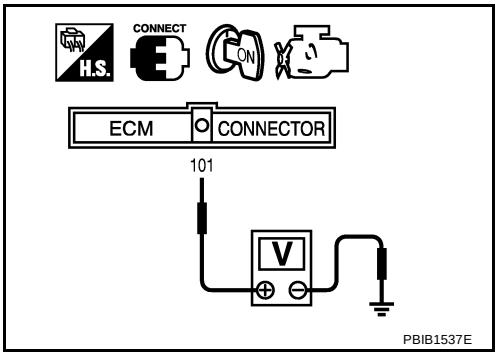

OK or NG

OK >> **INSPECTION END**
NG >> GO TO 8.

3. CHECK ASCD BRAKE SWITCH POWER SUPPLY CIRCUIT

1. Turn ignition switch OFF.
2. Disconnect ASCD brake switch harness connector.
3. Turn ignition switch ON.

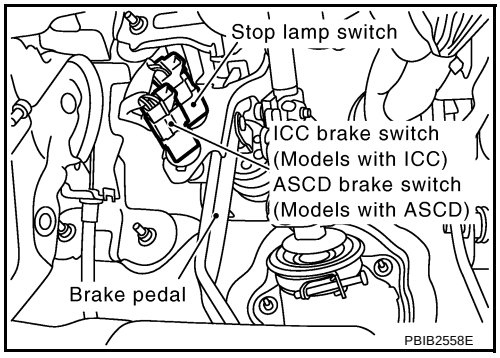

4. Check voltage between ASCD brake switch terminal 1 and ground with CONSULT-II or tester.

Voltage: Battery voltage

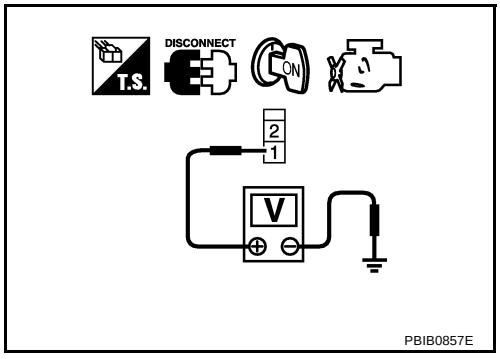

OK or NG

OK >> GO TO 5.
NG >> GO TO 4.

4. DETECT MALFUNCTIONING PART

Check the following.

- Fuse block (J/B) connector E201
- 10A fuse
- Harness for open or short between ASCD brake switch and fuse

>> Repair open circuit or short to ground or short to power in harness or connectors.

5. CHECK ASCD BRAKE SWITCH INPUT SIGNAL CIRCUIT FOR OPEN AND SHORT

1. Turn ignition switch OFF.
2. Disconnect ECM harness connector.
3. Check harness continuity between ECM terminal 108 and ASCD brake switch terminal 2. Refer to Wiring Diagram.

Continuity should exist.

4. Also check harness for short to ground or short to power.

OK or NG

OK >> GO TO 7.
NG >> GO TO 6.

6. DETECT MALFUNCTIONING PART

Check the following.

- Harness connectors E211, M41
- Harness for open or short between ECM and ASCD brake switch

>> Repair open circuit or short to ground or short to power in harness or connectors.

7. CHECK ASCD BRAKE SWITCH

Refer to EC-1278, "Component Inspection"

OK or NG

OK >> GO TO 13.
NG >> Replace ASCD brake switch.

8. CHECK STOP LAMP SWITCH POWER SUPPLY CIRCUIT

1. Turn ignition switch OFF.
2. Disconnect stop lamp switch harness connector.

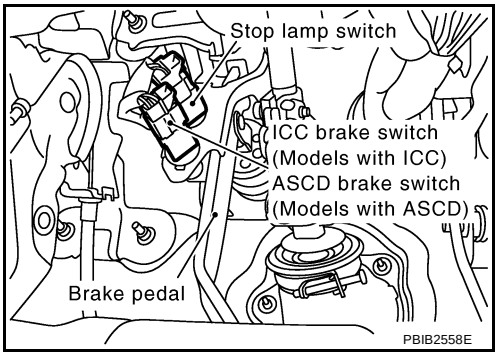

3. Check voltage between stop lamp switch terminal 1 and ground with CONSULT -II or tester.

Voltage: Battery voltage

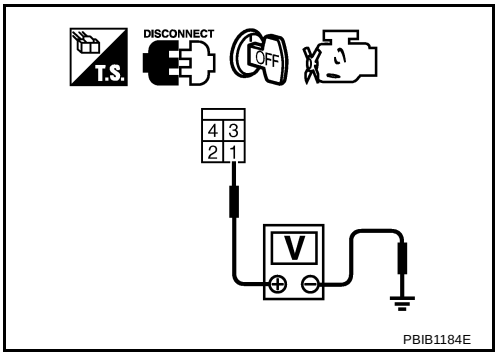

OK or NG

OK >> GO TO 10.
NG >> GO TO 9.

9. DETECT MALFUNCTIONING PART

Check the following.

- Fuse block (J/B) connector E201
- 10A fuse
- Harness for open or short between stop lamp switch and battery

>> Repair open circuit or short to ground or short to power in harness or connectors.

10. CHECK STOP LAMP SWITCH INPUT SIGNAL CIRCUIT FOR OPEN AND SHORT

1. Disconnect ECM harness connector.
2. Check harness continuity between ECM terminal 101 and stop lamp switch terminal 2. Refer to Wiring Diagram.

Continuity should exist.

3. Also check harness for short to ground and short to power.

OK or NG

OK >> GO TO 12.
NG >> GO TO 11.

11. DETECT MALFUNCTIONING PART

Check the following.

- Harness connectors E211, M41
- Harness for open or short between ECM and stop lamp switch

>> Repair open circuit or short to ground or short to power in harness or connectors.

12. CHECK STOP LAMP SWITCH

Refer to EC-1384, "Component Inspection" .

OK or NG

OK >> GO TO 13.
NG >> Replace stop lamp switch.

13. CHECK INTERMITTENT INCIDENT

Refer to EC-854, "TROUBLE DIAGNOSIS FOR INTERMITTENT INCIDENT" .

>> **INSPECTION END**

Component Inspection

ABS007XN

ASCD BRAKE SWITCH

1. Turn ignition switch OFF.
2. Disconnect ASCD brake switch harness connector.
3. Check harness continuity between ASCD brake switch terminals 1 and 2 under the following conditions.

Condition	Continuity
When brake pedal: Fully released.	Should exist.
When brake pedal: Slightly depressed.	Should not exist.

4. If NG, adjust ASCD brake switch installation, refer to BR-6, "BRAKE PEDAL" , and perform step 3 again.

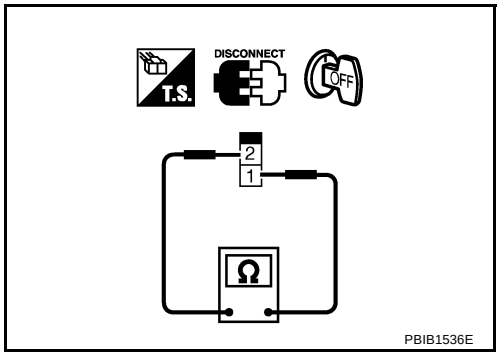

STOP LAMP SWITCH

1. Turn ignition switch OFF.
2. Disconnect stop lamp switch harness connector.
3. Check harness continuity between stop lamp switch terminals 1 and 2 under the following conditions.

Condition	Continuity
When brake pedal: Fully released.	Should not exist.
When brake pedal: Slightly depressed.	Should exist.

4. If NG, adjust stop lamp switch installation, refer to BR-6, "BRAKE PEDAL" , and perform step 3 again.

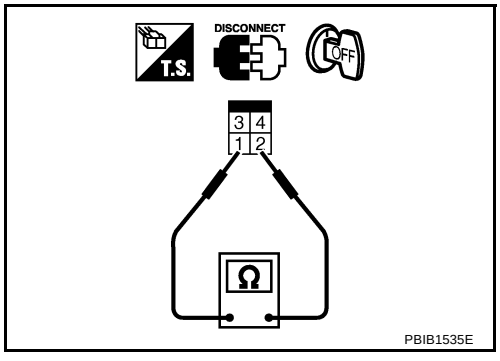

ASCD INDICATOR

PFP:24814

Component Description

ABS007XO

ASCD indicator lamp illuminates to indicate ASCD operation status. Lamp has two indicators, CRUISE and SET, and is integrated in combination meter.
CRUISE lamp illuminates when MAIN switch on ASCD steering switch is turned ON to indicated that ASCD system is ready for operation.
SET lamp illuminates when following conditions are met.

- CRUISE lamp is illuminated.
- SET/COAST switch on ASCD steering switch is turned ON while vehicle speed is within the range of ASCD setting.

SET lamp remains lit during ASCD control.
Refer to EC-727, "AUTOMATIC SPEED CONTROL DEVICE (ASCD)" for the ASCD function.

CONSULT-II Reference Value in Data Monitor Mode

ABS007XP

Specification data are reference value.

MONITOR ITEM	CONDITION		SPECIFICATION
CRUISE LAMP	● Ignition switch: ON	MAIN switch: Pressed at the 1st time → at the 2nd time	ON → OFF
SET LAMP	● MAIN switch: ON ● When vehicle speed is between 40 km/h (25 MPH) and 144 km/h (89 MPH)	ASCD is operating	ON
		ASCD is not operating	OFF

Wiring Diagram

ABS007XQ

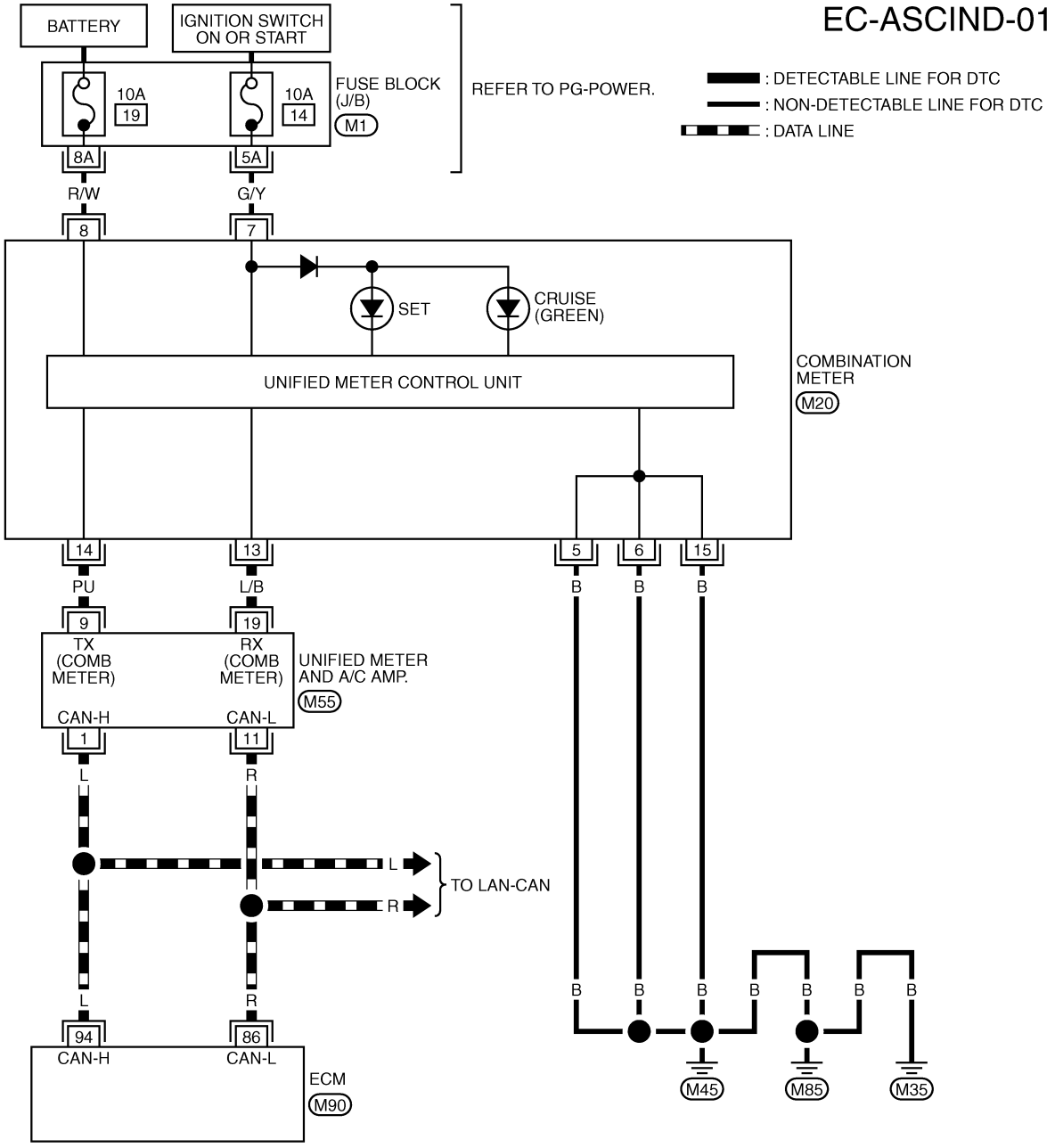

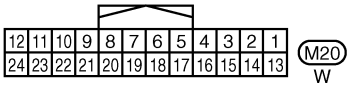

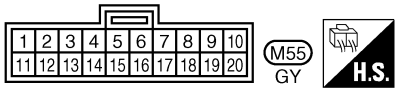

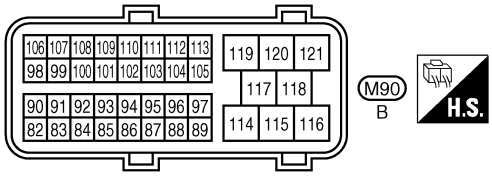

REFER TO THE FOLLOWING.
M1 -FUSE BLOCK-JUNCTION BOX (J/B)

TBWM0267E

Diagnostic Procedure

ABS007XR

1. CHECK OVERALL FUNCTION

Check ASCD indicator under the following conditions.

ASCD INDICATOR	CONDITION		SPECIFICATION
CRUISE LAMP	● Ignition switch: ON	● MAIN switch: Pressed at the 1st time → at the 2nd time	ON → OFF
SET LAMP	● MAIN switch: ON ● When vehicle speed is between 40 km/h (25 MPH) and 144 km/h (89 MPH)	● ASCD is operating	ON
		● ASCD is not operating	OFF

OK or NG

OK >> **INSPECTION END**
NG >> GO TO 2.

2. CHECK DTC

Check that DTC U1000 or U1001 is not displayed.

OK or NG

OK >> GO TO 3.
NG >> Perform trouble diagnosis for DTC U1000, U1001. Refer to EC-862, "DTC U1000, U1001 CAN COMMUNICATION LINE" .

3. CHECK DTC WITH “UNIFIED METER AND A/C AMP.”

Refer to DI-32, "SELF-DIAGNOSTIC RESULTS" .

OK or NG

OK >> GO TO 4.
NG >> Go to DI-34, "DTC [B2202] Meter Communication Circuit" .

4. CHECK INTERMITTENT INCIDENT

Refer to EC-854, "TROUBLE DIAGNOSIS FOR INTERMITTENT INCIDENT" .

>> **INSPECTION END**

SNOW MODE SWITCH

PFP:25130

Description

ABS00A2I

The snow mode switch signal is sent to the “unified meter and A/C amp.” from the snow mode switch. The “unified meter and A/C amp.” then sends the signal to the ECM by CAN communication line.
The snow mode is used for driving or starting the vehicle on snowy roads or slippery areas. If the snow mode is activated, the vehicle speed will not be accelerated immediately than your original pedal in due to avoid the vehicle slip. In other words, ECM controls the rapid engine torque change by controlling the electric throttle control actuator operating speed.

CONSULT-II Reference Value in the Data Monitor Mode

ABS00A2J

MONITOR ITEM	CONDITION		SPECIFICATION
SNOW MODE SW	● Ignition switch: ON	Snow mode switch: ON	ON
		Snow mode switch: OFF	OFF

Wiring Diagram

ABS00A2K

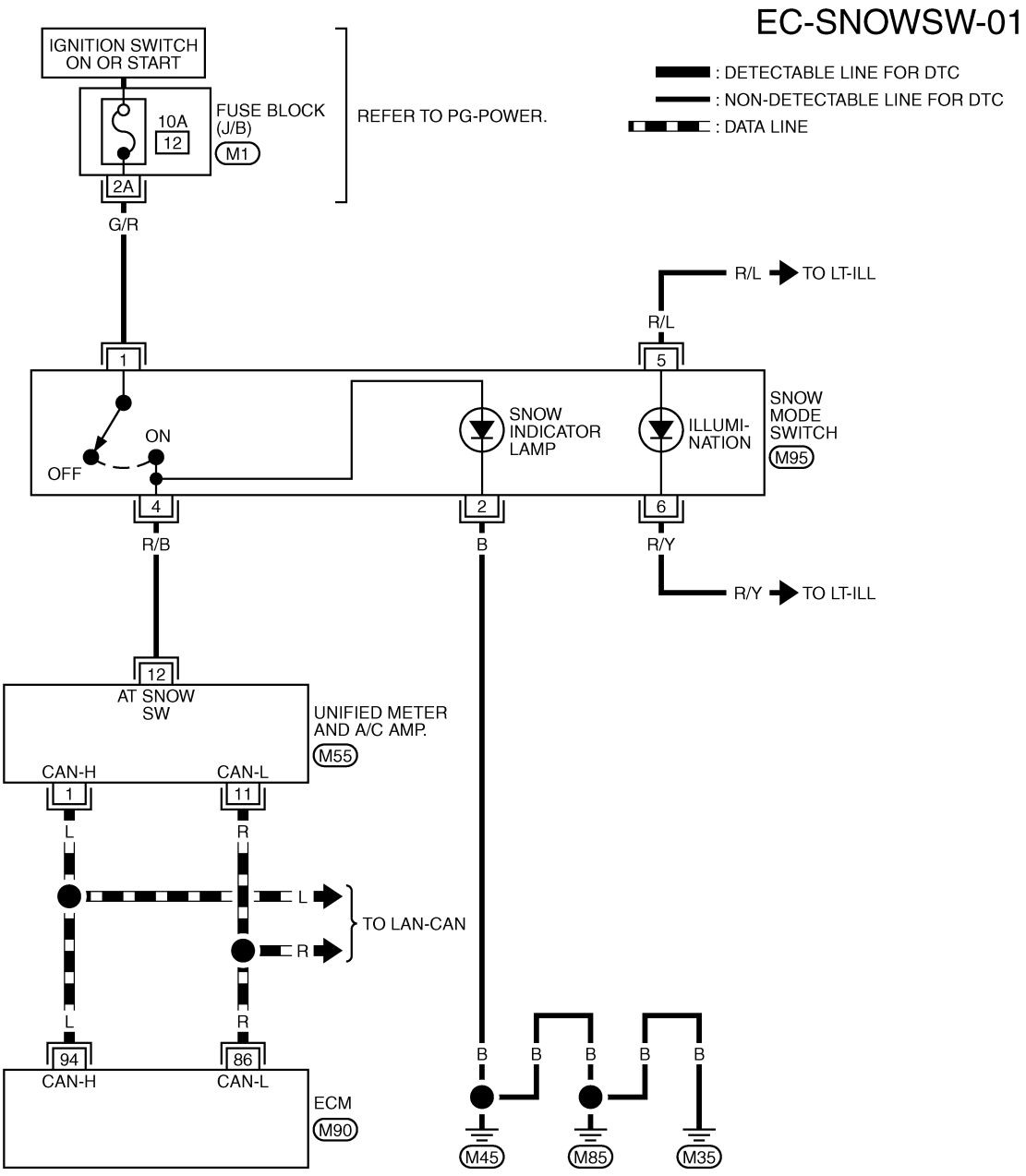

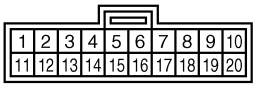

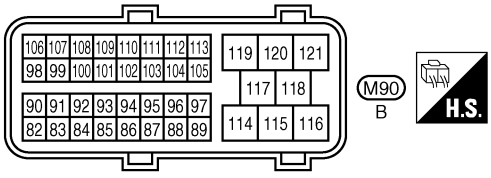

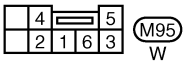

REFER TO THE FOLLOWING.
M1 -FUSE BLOCK-JUNCTION BOX (J/B)

TBWM0730E

Diagnostic Procedure

ABS00A2L

1. CHECK SNOW MODE SWITCH OVERALL FUNCTION-I

1. Turn ignition switch ON.
2. Select “SNOW MODE SW” in “DATA MONITOR” mode with CONSULT-II.
3. Check “SNOW MODE SW” indication under the following conditions.

CONDITION	INDICATION
Snow mode switch: ON	ON
Snow mode switch: OFF	OFF

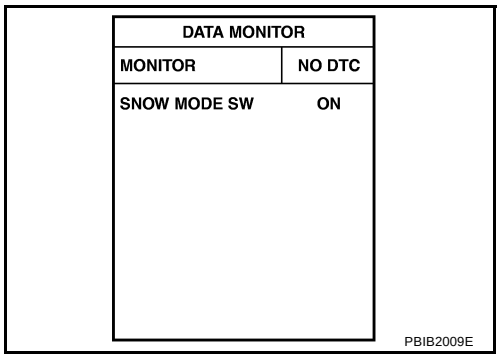

OK or NG

OK >> GO TO 2.
NG >> GO TO 3.

2. CHECK SNOW MODE SWITCH OVERALL FUNCTION-II

1. Turn ignition switch ON.
2. Start engine.
3. Check the snow mode indicator in the snow mode switch under the following condition.

CONDITION	INDICATION
Snow mode switch: ON	ON
Snow mode switch: OFF	OFF

OK or NG

OK >> **INSPECTION END**
NG >> GO TO 7.

3. CHECK DTC WITH “UNIFIED METER AND A/C AMP.”

Refer to DI-32, "SELF-DIAGNOSTIC RESULTS" .

OK or NG

OK >> GO TO 4.
NG >> Go to DI-28, "UNIFIED METER AND A/C AMP" .

4. CHECK SNOW MODE SWITCH POWER SUPPLY CIRCUIT

1. Turn ignition switch OFF.
2. Disconnect snow mode switch harness connector.
3. Turn ignition switch ON.
4. Check voltage between snow mode switch terminal 1 and ground with CONSULT-II or tester.

Voltage: Battery voltage.

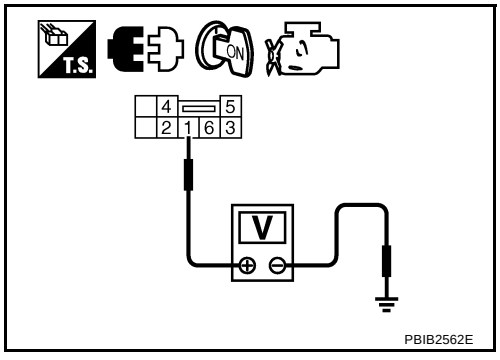

OK or NG

OK >> GO TO 6.
NG >> GO TO 5.

5. DETECT MALFUNCTIONING PART

Check the following.

- 10A fuse
- Harness for open or short between snow mode switch and fuse.

>> Repair open circuit or short to ground or short to power in harness or connectors.

6. CHECK SNOW MODE SWITCH INPUT SIGNAL CIRCUIT FOR OPEN AND SHORT

1. Turn ignition switch OFF.
2. Disconnect “unified meter and A/C amp.” harness connector.
3. Check harness continuity between snow mode switch terminal 4 and “unified meter and A/C amp.” terminal 12. Refer to Wiring Diagram.

Continuity should exist.

4. Also check harness for short to ground and short to power.

OK or NG

OK >> GO TO 9.
NG >> Repair open circuit or short to ground or short to power in harness or connectors.

7. CHECK GROUND CONNECTIONS

1. Turn ignition switch OFF.
2. Loosen and retighten three ground screws on the body.
Refer to EC-861, "Ground Inspection" .

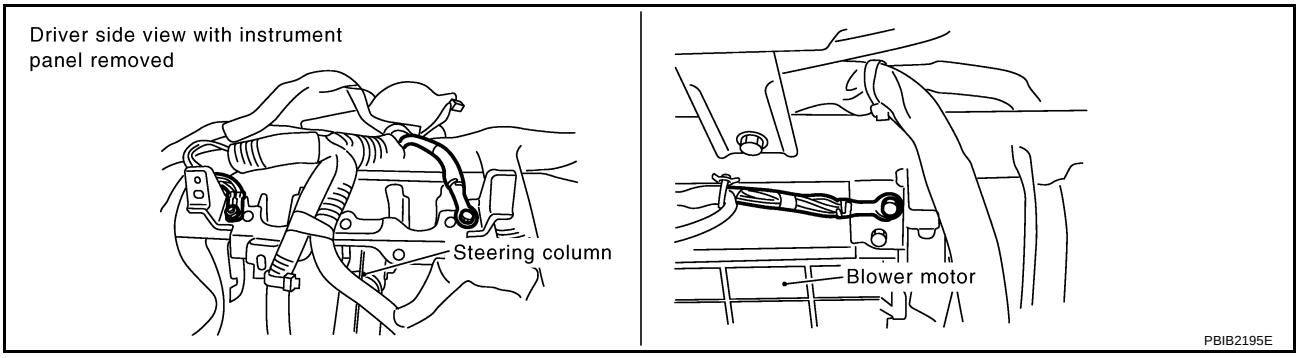

OK or NG

OK >> GO TO 8.
NG >> Repair or replace ground connections.

8. CHECK SNOW MODE INDICATOR LAMP GROUND CIRCUIT FOR OPEN AND SHORT

1. Check harness continuity between snow mode switch terminal 2 and ground.
Refer to Wiring Diagram.

Continuity should exist.

2. Also check harness for short to power.

OK or NG

OK >> GO TO 9.
NG >> Repair open circuit or short to power in harness or connectors.

9. CHECK SNOW MODE SWITCH

Refer to EC-1392, "Component Inspection" .

OK or NG

OK >> GO TO 10.
NG >> Replace snow mode switch.

10. CHECK INTERMITTENT INCIDENT

Refer to EC-854, "TROUBLE DIAGNOSIS FOR INTERMITTENT INCIDENT" .

>> **INSPECTION END**

Component Inspection

ABS00A2M

SNOW MODE SWITCH

1. Check continuity between snow mode switch terminals 1 and 4 under the following conditions.

CONDITION	CONTINUITY
Snow mode switch: ON	Should exist
Snow mode switch: OFF	Should not exist

2. If NG, replace snow mode switch.
   If OK, go to following step.

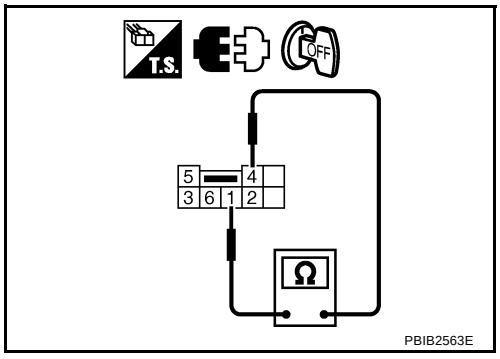

3. Check continuity between snow mode switch terminals 2 and 4 under the following conditions.

CONDITION	CONTINUITY
1	Should exist.
2	Should not exist.

4. If NG, replace snow mode switch.

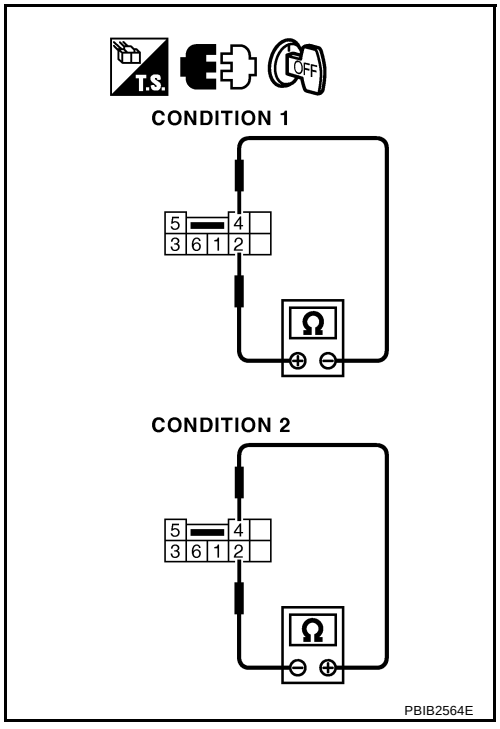

MIL AND DATA LINK CONNECTOR

PFP:24814

Wiring Diagram

ABS007XS

EC-MIL/DL-01

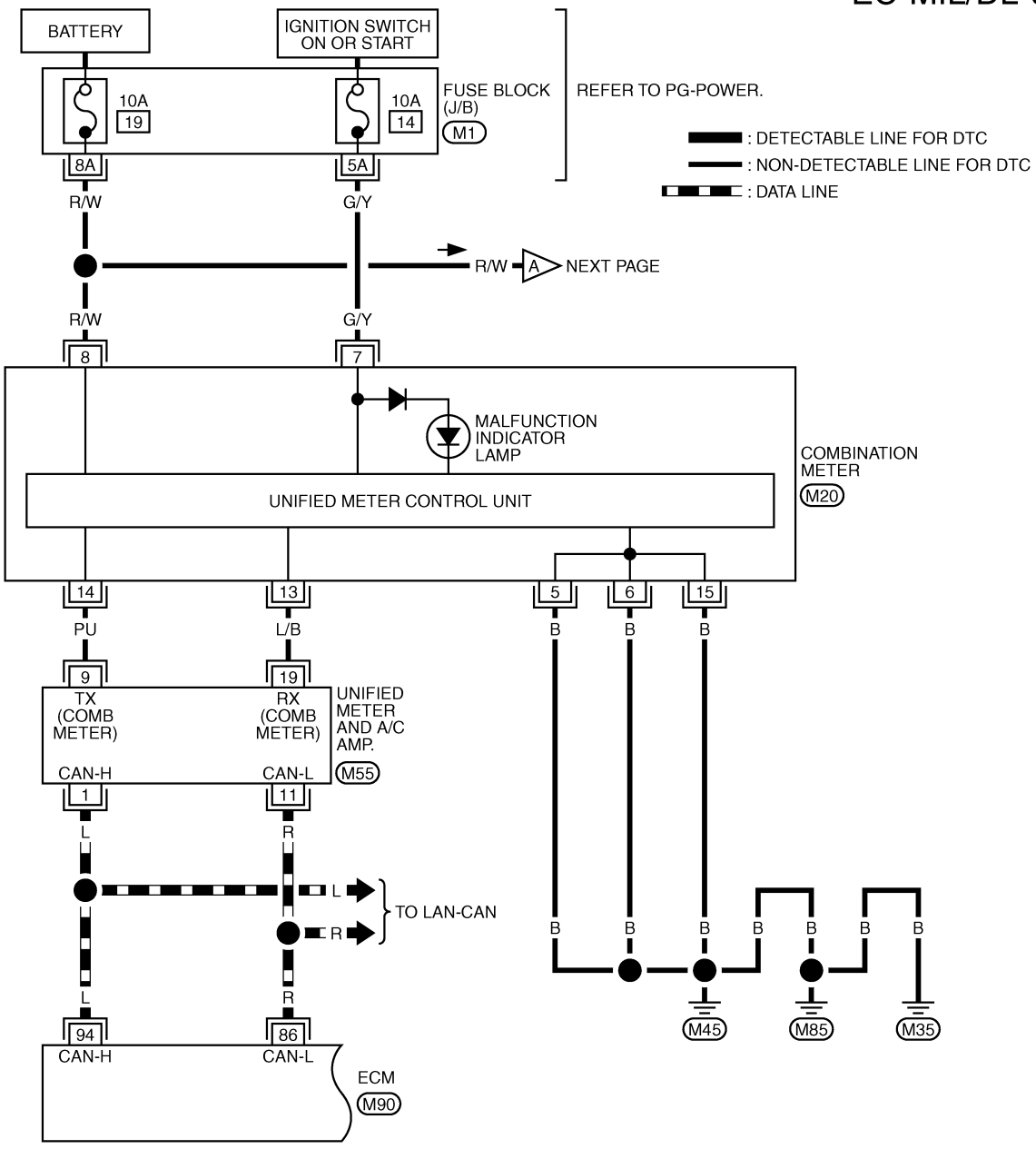

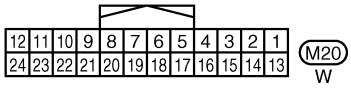

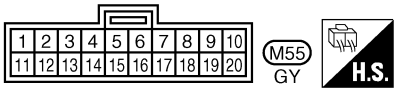

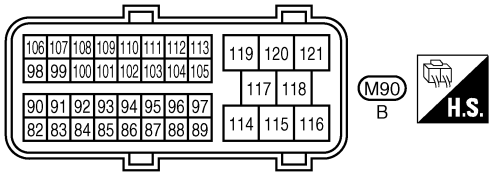

REFER TO THE FOLLOWING.
M1 -FUSE BLOCK-JUNCTION BOX (J/B)

TBWM0268E

EC-MIL/DL-02

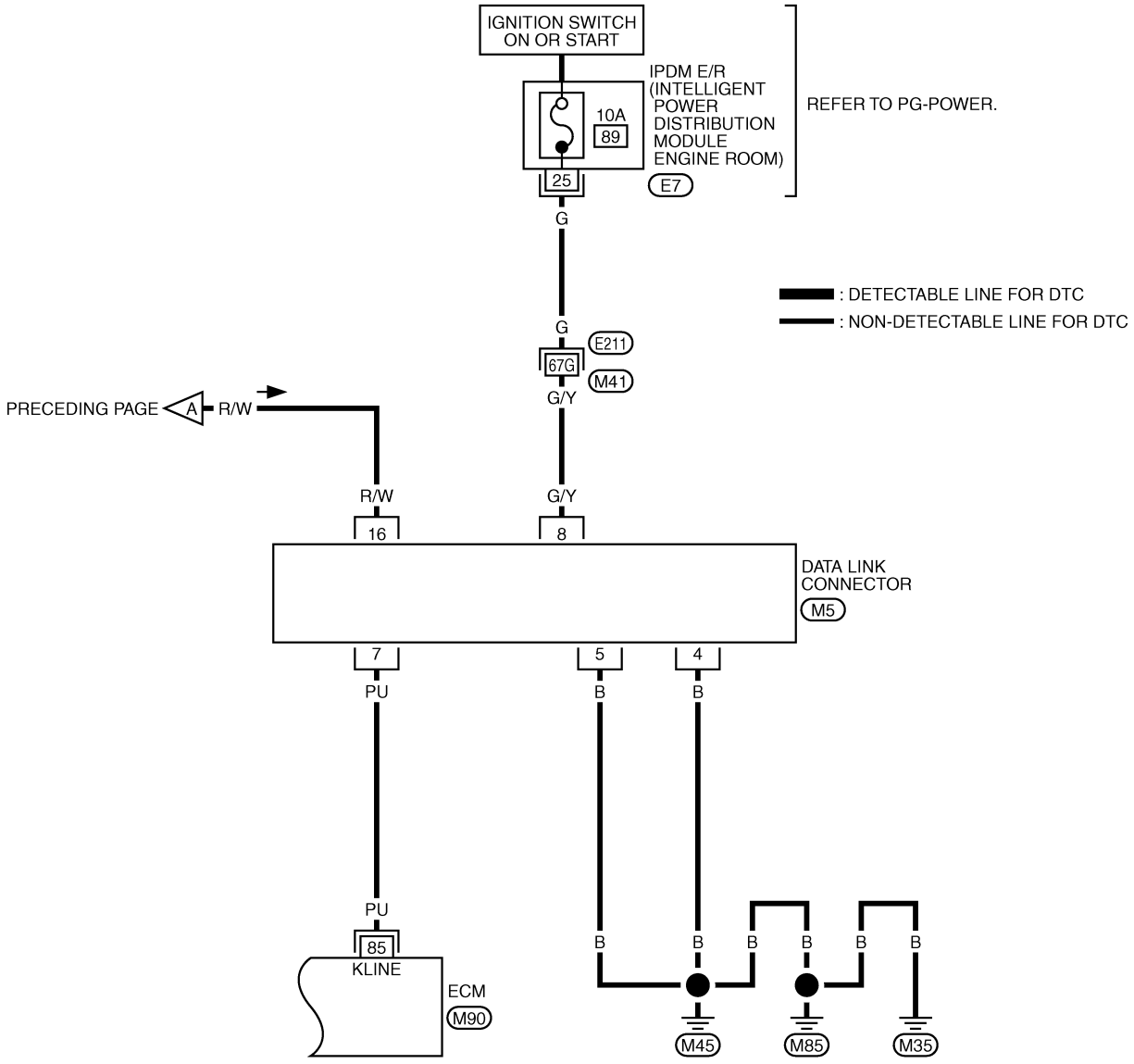

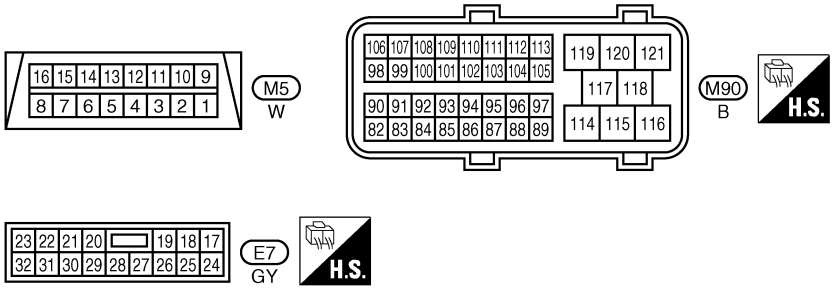

REFER TO THE FOLLOWING.
E211 -SUPER MULTIPLE JUNCTION (SMJ)

TBWM0269E

SERVICE DATA AND SPECIFICATIONS (SDS)

PFP:00030

Fuel Pressure

ABS007Y4

Fuel pressure at idling kPa (kg/cm^2 , psi)	Approximately 350 (3.57, 51)

Idle Speed and Ignition Timing

ABS007Y5

Target idle speed	No-load* (in P or N position)	650±50 rpm
Air conditioner: ON	In P or N position	700 rpm or more
Ignition timing	In P or N position	12° ± 5° BTDC

*: Under the following conditions:

- Air conditioner switch: OFF
- Electric load: OFF (Lights, heater fan & rear window defogger)
- Steering wheel: Kept in straight-ahead position

Calculated Load Value

ABS007Y6

Condition	Calculated load value% (Using CONSULT-II or GST)
At idle	14.0 - 33.0
At 2,500 rpm	12.0 - 25.0

Mass Air Flow Sensor

ABS007Y7

Supply voltage	Battery voltage (11 - 14V)
Output voltage at idle	1.0 - 1.3V*
Mass air flow (Using CONSULT-II or GST)	2.0 - 6.0 g·m/sec at idle* 7.0 - 20.0 g·m/sec at 2,500 rpm*

*: Engine is warmed up to normal operating temperature and running under no-load.

Intake Air Temperature Sensor

ABS007Y8

Temperature °C (°F)	Resistance kΩ
25 (77)	1.94 - 2.06

Engine Coolant Temperature Sensor

ABS007Y9

Temperature °C (°F)	Resistance kΩ
20 (68)	2.1 - 2.9
50 (122)	0.68 - 1.00
90 (194)	0.236 - 0.260

Fuel Tank Temperature Sensor

ABS00E8W

Temperature °C (°F)	Resistance kΩ
20 (68)	2.3 - 2.7
50 (122)	0.79 - 0.90

Crankshaft Position Sensor (POS)

ABS007YC

Refer to EC-1042, "Component Inspection" .

Camshaft Position Sensor (PHASE)

ABS007YD

Refer to EC-1049, "Component Inspection" .

Heated Oxygen Sensor 1 Heater

ABS007YA

Resistance [at 25°C (77°F)]	3.3 - 4.0Ω

Heated Oxygen sensor 2 Heater

ABS007YB

Resistance [at 25°C (77°F)]	5.0 - 7.0Ω

Throttle Control Motor

ABS007YE

Resistance [at 25°C (77°F)]	Approximately 1 - 15Ω

Injector

ABS007YF

Resistance [at 10 - 60°C (50 - 140°F)]	13.5 - 17.5Ω

Fuel Pump

ABS007YG

Resistance [at 25°C (77°F)]	0.2 - 5.0Ω