# SECTION ACS
# AUTO CRUISE CONTROL SYSTEM

## CONTENTS

### ASCD



### ICC

# AUTOMATIC SPEED CONTROL DEVICE (ASCD)

PFP:18930

## Description

AKS007XN

Regarding the information for ASCD system, refer to EC-679, "AUTOMATIC SPEED CONTROL DEVICE (ASCD)" (VQ35DE), EC-1356, "AUTOMATIC SPEED CONTROL DEVICE (ASCD)" (VK45DE).

# PRECAUTIONS

PFP:00001

## Precautions for Supplemental Restraint System (SRS) “AIR BAG” and “SEAT BELT PRE-TENSIONER”

AKS007IE

The Supplemental Restraint System such as “AIR BAG” and “SEAT BELT PRE-TENSIONER”, used along with a front seat belt, helps to reduce the risk or severity of injury to the driver and front passenger for certain types of collision. This system includes seat belt switch inputs and dual stage front air bag modules. The SRS system uses the seat belt switches to determine the front air bag deployment, and may only deploy one front air bag, depending on the severity of a collision and whether the front occupants are belted or unbelted.
Information necessary to service the system safely is included in the SRS and SB section of this Service Manual.

**WARNING:**

- **To avoid rendering the SRS inoperative, which could increase the risk of personal injury or death in the event of a collision which would result in air bag inflation, all maintenance must be performed by an authorized NISSAN/INFINITI dealer.**
- **Improper maintenance, including incorrect removal and installation of the SRS, can lead to personal injury caused by unintentional activation of the system. For removal of Spiral Cable and Air Bag Module, see the SRS section.**
- **Do not use electrical test equipment on any circuit related to the SRS unless instructed to in this Service Manual. SRS wiring harnesses can be identified by yellow and/or orange harnesses or harness connectors.**

## Precautions for ICC System Service

AKS006Y8

- Do not look straight into the laser beam discharger when adjusting laser beam aiming.
- Turn the ON/OFF switch OFF in conditions similar to driving, suchlike Free rollers or Chassis dynamometer.
- Do not use the ICC sensor removing from vehicle, disassemble, or remodel the sensor.
- Erase DTC when replacing parts of ICC system, then check the operation of ICC system after adjusting laser beam aiming if necessary.

## Wiring Diagrams and Trouble Diagnosis

AKS006Y9

When you read wiring diagrams, refer to the followings:

- Refer to GI-15, "How to Read Wiring Diagrams" in GI section
- Refer to PG-3, "POWER SUPPLY ROUTING CIRCUIT" for power distribution circuit in PG section

When you perform trouble diagnosis, refer to the followings:

- Refer to GI-11, "HOW TO FOLLOW TEST GROUPS IN TROUBLE DIAGNOSES" in GI section
- Refer to GI-27, "How to Perform Efficient Diagnosis for an Electrical Incident" in GI section

# PREPARATION

PFP:00002

## Special Service Tools

AKS006YA

The actual shapes of Kent-Moore tools may differ from those of special service tools illustrated here.

| Tool number<br>(Kent-Moore No.)<br>Tool name | | Description |
|---|---|---|
| KV99110100<br>(J-45718)<br>ICC target board |  <br>PKIA0358J | Laser beam aiming adjustment |

# DESCRIPTION

PFP:00000

## Outline

AKS006YB

The Intelligent Cruise Control (ICC) system automatically maintains a selected distance from the vehicle ahead according to that vehicle's speed, or at the set speed, if the road ahead is clear.
The ICC function has two cruise control modes and brake assist (with preview function).

### VEHICLE-TO-VEHICLE DISTANCE CONTROL MODE

Vehicle-to-vehicle distance control mode, the same speed as other vehicles can be maintained without the constant need to adjust the operating speed as with a normal cruise control system.
The system is intended to enhance the operation of the vehicle when following another vehicle in the same lane and direction.
If the distance sensor detects a slower moving vehicle ahead, the system will reduce speed so that the vehicle ahead can be followed at the selected distance.
The system automatically controls the throttle and applies the brakes (up to 25% of vehicle braking power) if necessary.
The detection range of the sensor is approximately 390 ft (120 m) ahead.
Refer to Owner's Manual for Intelligent Cruise Control System operating instructions.

### CONVENTIONAL (FIXED SPEED) CRUISE CONTROL MODE

Conventional (fixed speed) cruise control mode is cruising at preset speeds.
Refer to Owner's Manual for Intelligent Cruise Control System operating instructions.

### BRAKE ASSIST (WITH PREVIEW FUNCTION)

When the force applied to brake pedal exceeds a certain level, the Brake Assist is activated and generates a greater braking force than that of a conventional brake booster even with light pedal force.
When the Preview Function identifies the need to apply the sudden brake by sensing the vehicle ahead in the same lane and the distance and relative speed from it, it applies the brake pre-pressure before driver depress the brake pedal and improves brake response by reducing its free play.
Refer to Owner's Manual for BRAKE ASSIST (WITH PREVIEW FUNCTION) operating instructions.

## System Diagram

AKS006YC

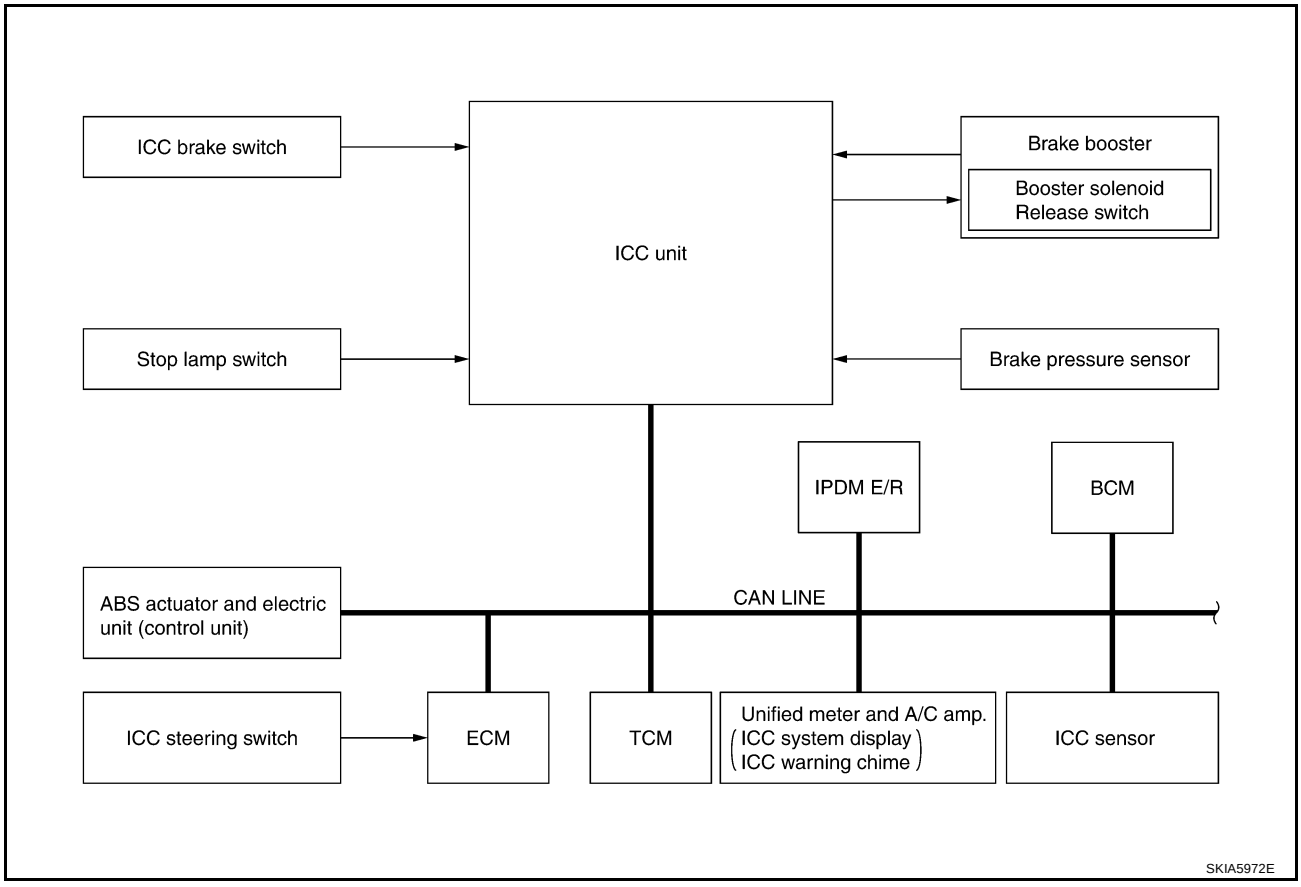

## Components Description

AKS006YD

| Component | Vehicle-to-vehicle distance control mode | Conventional (fixed speed) cruise control mode | Brake assist (with pre-view brake) | Description |
|---|---|---|---|---|
| ICC unit | × | × | × | Operates throttle control actuator and brake booster based on that sensor signals and CAN communication data, then controls vehicle distance. |
| ICC sensor | × | | × | Irradiate laser beam, and receives reflected laser beam to measure distance from preceding vehicle. |
| ECM | × | × | | Transmits throttle position signal and ICC steering switch signal to ICC unit. |
| ABS actuator and electric unit (control unit) | × | × | × | Transmits wheel speed signal to ICC unit. |
| Brake pressure sensor | × | | × | Detects fluid pressure in master cylinder. |
| Brake booster | × | | × | Adjusts brake fluid pressure, based on command from ICC unit. |
| BCM | × | | | Transmit front wiper request signal to ICC unit. |
| TCM | × | × | | Transmits gear position signal and output shaft revolution signal to ICC unit. |

## CAN Communication

AKS00815

CAN (Controller Area Network) is a serial communication line for real time application. It is an on-vehicle multiplex communication line with high data communication speed and excellent error detection ability. Many electric control units are equipped onto a vehicle, and each control unit shares information and links with other control units during operation (not independent). In CAN communication, control units are connected with 2 communication lines (CAN H line, CAN L line) allowing a high rate of information transmission with less wiring. Each control unit transmits/receives data but selectively reads required data only.

### CAN COMMUNICATION UNIT

Refer to LAN-6, "CAN Communication Unit" .

## Switch Operation

AKS006YF

The system is operated by a master ON/OFF switch and four control switches, all mounted on the steering wheel.

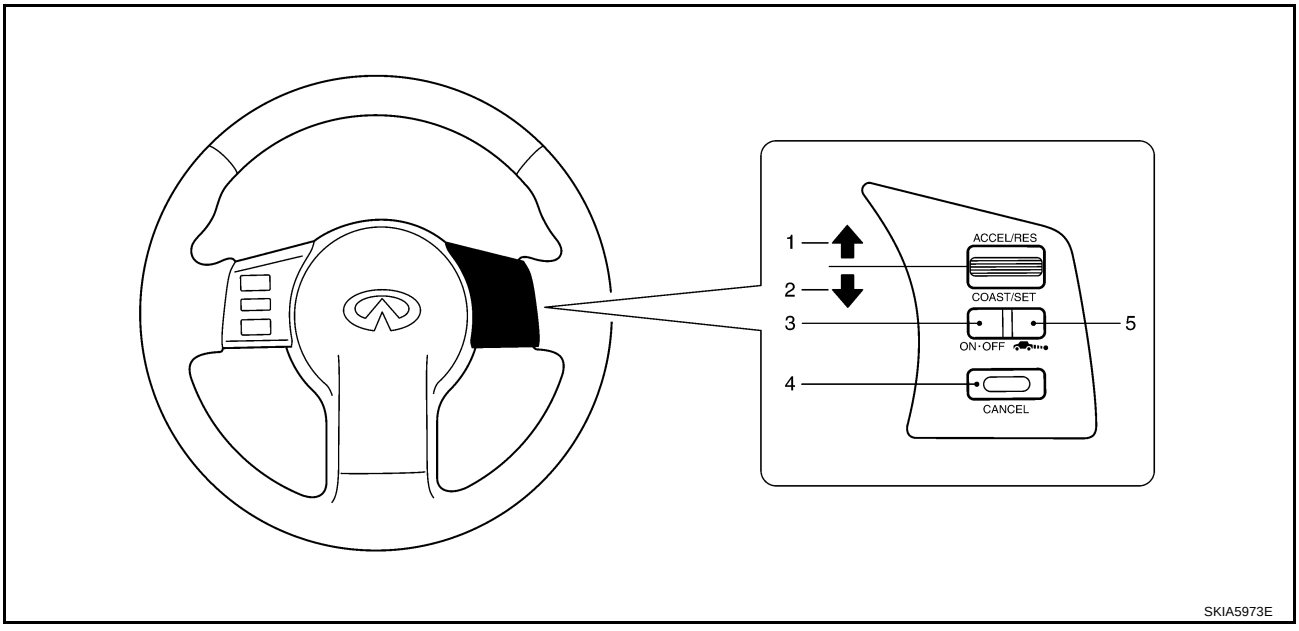

| No. | Switch name | Description |
|---|---|---|
| 1 | ACCEL/RES switch | Resumes set speed or increases speed incrementally |
| 2 | COAST/SET switch | Sets desired cruise speed, reduces speed incrementally |
| 3 | ON/OFF switch | Master switch to activate the system |
| 4 | CANCEL switch | Deactivates system without erasing set speed |
| 5 | DISTANCE switch | Changes the following distance from: Long, Middle, Short |

## ICC System Display

AKS006YG

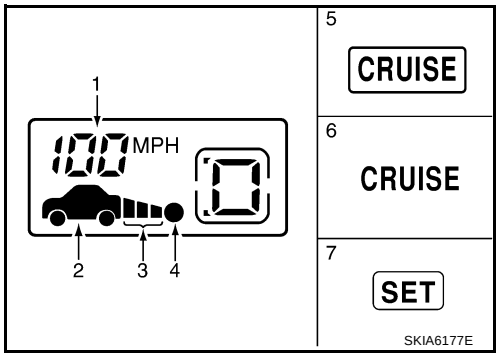


| No. | Component | Description |
|---|---|---|
| 1 | Set vehicle speed indicator | Indicates the set vehicle speed. |
| 2 | Vehicle ahead detection indicator | Indicates whether it detects a vehicle ahead. |
| 3 | Set distance indicator | Display the selected distance between vehicles set with the DISTANCE switch. |
| 4 | Own vehicle indicator | Indicates the base vehicle. |
| 5 | ON/OFF switch indicator lamp (Green) | Indicates that the ON/OFF switch is ON. |
| 6 | Intelligent cruise control system warning lamp (Yellow) | The light comes on if there is a malfunction in the ICC system. |
| 7 | Cruise set switch indicator lamp | Indicates that the conventional cruise control mode is controlled. |

# ACTION TEST

PFP:00000

## ICC System Running Test

AKS006YH

### VEHICLE-TO-VEHICLE DISTANCE CONTROL MODE

#### Set Checking

1. Press the ON/OFF switch for less than 1.5 seconds.
2. Drive the vehicle between 25 MPH (40 km/h for CANADA models) and 90 MPH (144 km/h for CANADA models).
3. Push the COAST/SET switch.
4. Confirm that the desired speed is set as hand is released from the COAST/SET switch.

**NOTE:**

- When there is no vehicle ahead, drive at the set speed steadily.
- When there is a vehicle ahead, control to maintain distance from the vehicle ahead, watching its speed.
- The set vehicle speed is displayed on the ICC system indicator in the combination meters.

#### Check For Increase Of The Cruising Speed

1. Set vehicle-to-vehicle distance control mode at desired speed.
2. Check if the set speed increases by 1 MPH (1 km/h for CANADA models) as ACCEL/RES switch is pushed.

**NOTE:**

The maximum set speed of the vehicle-to-vehicle distance control mode is 90 MPH (144 km/h for CANADA models).

#### Check For Decrease Of The Cruising Speed

1. Set vehicle-to-vehicle distance control mode at desired speed.
2. Check if the set speed decreases by 1 MPH (1 km/h for CANADA models) as COAST/SET switch is pushed.

**NOTE:**

- Vehicle-to-vehicle distance control mode is automatically turned off when the driving speed lowers to 20 MPH (32 km/h for CANADA models) due to the deceleration of the vehicle ahead.
- The minimum set speed of the vehicle-to-vehicle distance control mode is 25 MPH (40 km/h for CANADA models).

#### Check For The Cancellation Of Vehicle-To-Vehicle Distance Control Mode (Normal Driving Condition) In The Following Cases:

1. When the brake pedal is depressed after the system is turned on.
2. When the select lever is shifted into other than “D” including manual shift.
3. When the ON/OFF switch is turned off.
4. When CANCEL switch is operated.

#### Check For Restoring The Speed That Is Set By Vehicle-To-Vehicle Distance Control Mode Before Cancellation

1. Cancel the system by depressing the foot brake.Then, check that the speed before cancellation is restored when pressing ACCEL/RES switch with 25 MPH (40 km/h for CANADA models) or above.
2. Cancel the system by shifting the select lever into other than “D”, Then, check if the speed set before the cancellation is restored when ACCEL/RES switch is pressed.
3. Check if the speed previously set is restored when ACCEL/RES switch is operated with driving 25 MPH (40 km/h for CANADA models), after canceling vehicle-to-vehicle distance control mode by operating the CANCEL switch.

### Check For ON/OFF Switch

1. Start the engine.Then, check the following operations are carried correctly.
2. Vehicle-to-vehicle distance control mode is displayed in speedometer illuminates when ON/OFF switch is pressed “ON” for less than 1.5 seconds and ready for operation.The illumination goes off when ON/OFF switch is turned to OFF.
3. “CRUISE” illumination and ICC system display go off when the key switch is turned to OFF while ON/OFF switch is ON (“CRUISE” illumination is ON and vehicle-to-vehicle distance control mode is ready for operation).

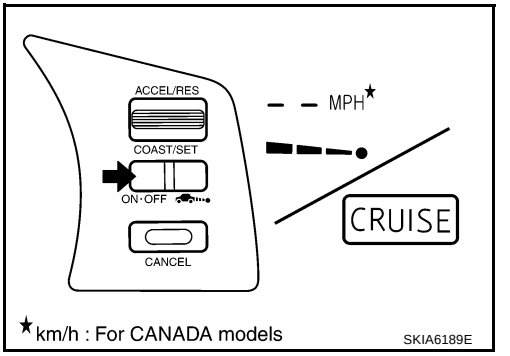


### Check For ACCEL/RES, COAST/SET, CANCEL Switches

1. Check if ACCEL/RES, COAST/SET, CANCEL switches are operated smoothly.
2. Check if buttons come up as hand is released from the buttons.

### Check For Distance Switch

1. Start the engine.
2. Press the ON/OFF switch for less than 1.5 seconds.
3. Press the DISTANCE switch.
4. Check if the set distance indicator changes display in order of: (long)→(middle)→(short).

**NOTE:**
The set distance indicator shows 'long' immediately after the engine starts.

| Distance | Display | Approximate distance at 60 MPH (100 km/h) [ft (m)] |
|---|---|---|
| Long | 60 MPH | 195 (60) |
| Middle | 60 MPH | 130 (40) |
| Short | 60 MPH | 90 (30) |

SKIA6178E

## CONVENTIONAL (FIXED SPEED) CRUISE CONTROL MODE

### Set Checking

1. Press the ON/OFF switch for more than 1.5 seconds.
2. Drive the vehicle between 25 MPH (40 km/h for CANADA models) and 90 MPH (144 km/h for CANADA models).
3. Push the COAST/SET switch.
4. Confirm that the desired speed is set as hand is released from the COAST/SET switch.

**NOTE:**

- ICC system display in the combination meters shows nothing.

### Check For Increase Of The Cruising Speed

1. Set the conventional (fixed speed) cruise control mode at desired speed.
2. Check if the set speed increases by 1 MPH (1.6 km/h for CANADA models) as ACCEL/RES switch is pushed.

**NOTE:**

- If the ACCEL/RES switch is kept lifting up during cruise control driving, the vehicle speed increases until the switch is released.
- The maximum set speed is 90 MPH (144 km/h for CANADA models).

### Check For Decrease Of The Cruising Speed

1. Set the conventional (fixed speed) cruise control mode at desired speed.
2. Check if the set speed decreases by 1 MPH (1.6 km/h for CANADA models) as COAST/SET switch is pushed.

**NOTE:**

- Conventional (fixed speed) cruise control mode is automatically turned off when the driving speed lowers to 20 MPH (32 km/h for CANADA models) due to the deceleration of the vehicle ahead.
- The lowest set speed is 25 MPH (40 km/h for CANADA models).

### Check For The Cancellation Of Conventional (Fixed Speed) Cruise Control Mode (Normal Driving Condition) In The Following Cases:

Refer.toACS-9, "Check For The Cancellation Of Vehicle-To-Vehicle Distance Control Mode (Normal Driving Condition) In The Following Cases:"

### Check For Restoring The Speed That Is Set By Conventional (Fixed Speed) Cruise Control Mode Before ICC Cancellation

Refer to.ACS-9, "Check For Restoring The Speed That Is Set By Vehicle-To-Vehicle Distance Control Mode Before Cancellation"

### Check For ON/OFF Switch

1. Start the engine.Then, check the following operations are carried correctly.
2. “CRUISE” lamp (green) illuminates and ICC system indicator goes off when ON/OFF switch is pressed “ON” for more than 1.5 seconds, and then ready for operation. The illumination goes off when ON/OFF switch is turned to OFF.
3. “CRUISE” illumination go off when the key switch is turned to OFF while ON/OFF switch is ON.

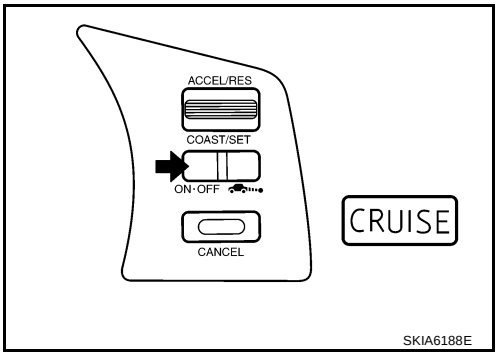


### Check For ACCEL/ RES, COAST/SET, CANCEL Switches

1. Check if ACCEL/RES, COAST/SET, CANCEL switches are operated smoothly.
2. Check if buttons come up as hand is released from the buttons.

# LASER BEAM AIMING ADJUSTMENT

PFP:00026

## Outline

AKS006YI

Adjust the laser beam aiming every time the ICC sensor is removed or installed.

**CAUTION:**

- **Place the vehicle on the level ground when the laser beam aiming adjustment is operated.**
- **Follow the CONSULT-II when adjusting the Laser beam aiming (Laser beam aiming adjustment cannot be operated without CONSULT-II).**

## Preparation

AKS006YJ

- Keep all tires inflated to correct pressures. Adjust the tire pressure to the specified pressure value.
- See that there is no-load in vehicle other than the driver (or equivalent weight placed in driver's position). Coolant, engine oil filled up to correct level and full fuel tank.
- Shift the gear into “P” position and release the parking brake.
- Clean the sensor with a soft cloth.

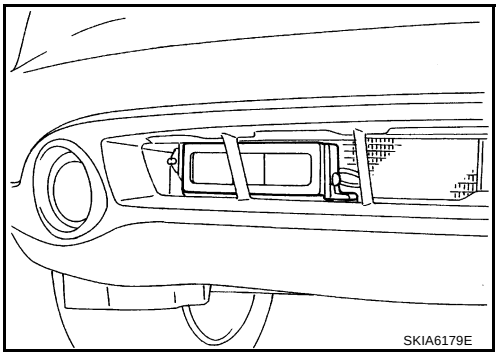


## Outline of Adjustment Procedure

AKS006YK

1. Set up the ICC target board [KV99110100 (J-45718)].
2. Adjust the sensor following the procedure on CONSULT-II (Turn manually the screw for up-down position adjustment. ICC sensor automatically adjust the right-left position.).

## Setting the ICC Target Board

AKS006YL

Accurate ICC target board setting is required for the laser beam aiming adjustment.

**CAUTION:**

**ICC system does not function normally if laser beam aiming is not accurate.**

### ADJUSTING HEIGHT OF THE TARGET

1. Attach a triangle scale as shown in the right figure.

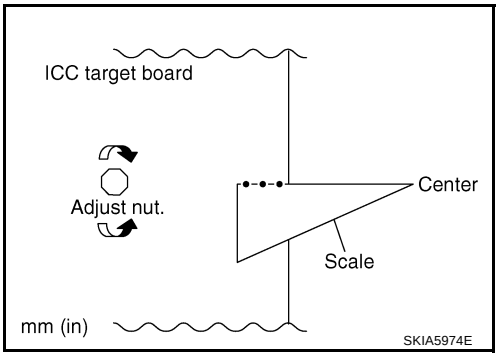

2. Adjust the height of the target stand so that the point of the triangle aims the center of the ICC sensor.

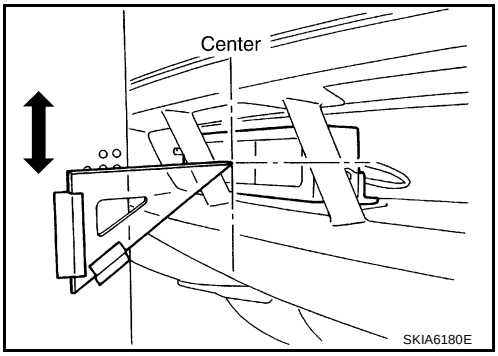


## ADJUSTING THE RIGHT-LEFT POSITION OF THE TARGET

1. Attach a scale (at least 350 mm [14 in] or longer) or stick as shown in the figure.

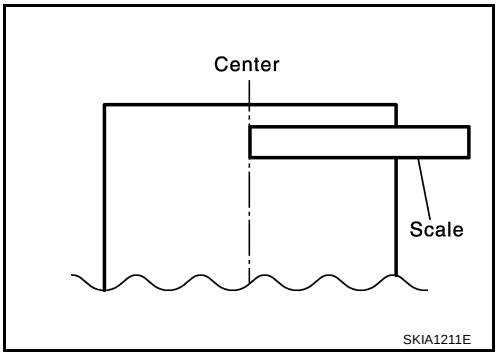


2. Suspend a thread with weight on the tip of the thread to 310 mm (12.2 in) left side of the target board from the center of the target board on top.

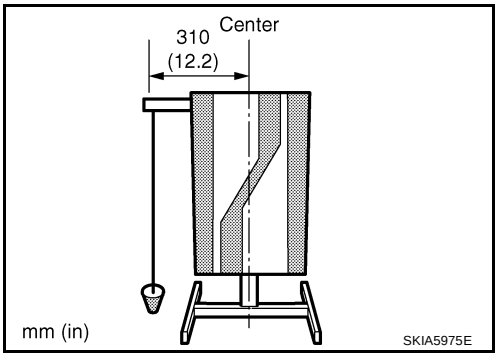


## SETTING THE TARGET

1. Suspend a thread with weight on tip to splice the center of the front and back bumpers. Then, mark the center point on the ground as each weight points.
2. Link the front and back bumpers center points marked on the ground, and mark a point 5 m ahead of the sensor, on the extended line of the previous link line of the bumper center points. Then, adjust the position of the target board so that the weight come on the top of the marked point (5 m ahead of the sensor) and face to the vehicle.
3. Adjust the position of the target board so that the extended line that links the center of the rear window (the center of the rear window defogger pattern) and the center of the front windshield (the setting part of the room mirror) align with the weight suspended from the board.

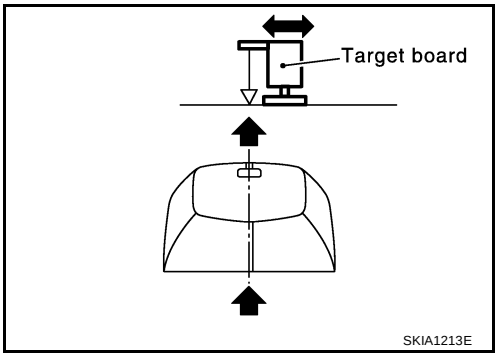


4. Remove the thread suspended to the left side of board and suspend a thread with weight on tip on the center of the target board.Then mark the point of weight on the ground.

5. Pivot the edge of the target board 20° to either side.

   **NOTE:**
   Approx. 50 mm (1.97 in) shift rates the 20° movement.

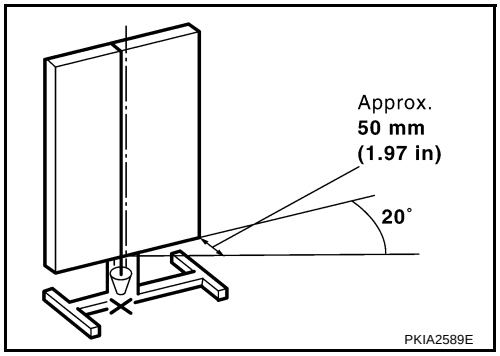


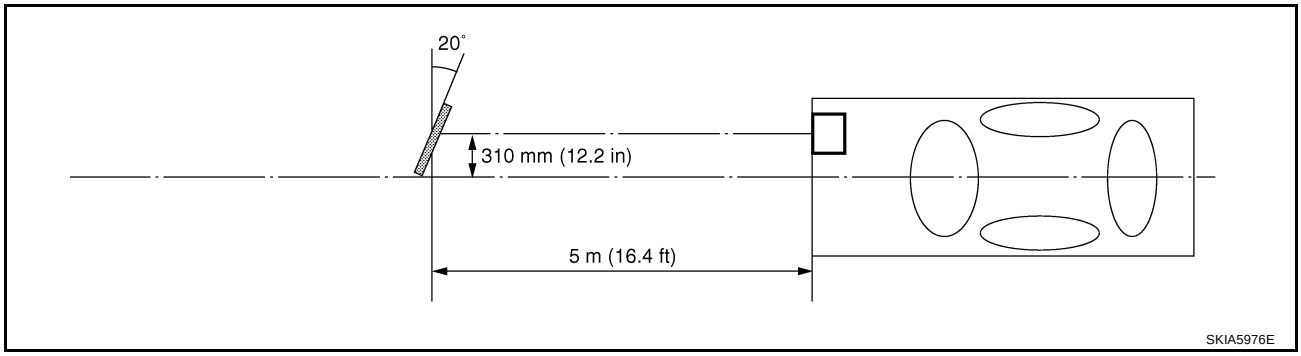


6. Do not place anything in the space shown in the figure (view from top).

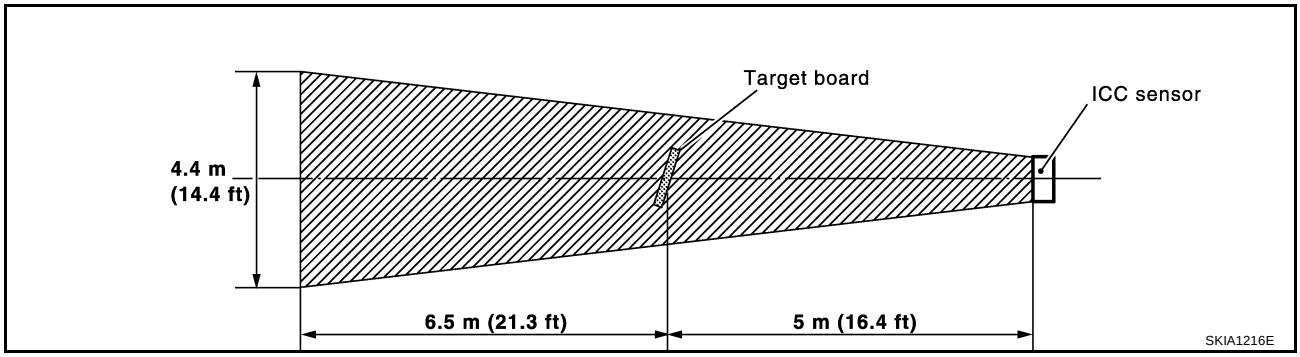


**NOTE:**
In case the space shown in the illustration is not available, make space by covering the side of the target board with a 400 mm (15.75 in)-size frosted black board or black cloth.

## Aiming Adjustment

*AKS006YM*

**CAUTION:**

- **Complete all necessary work for laser beam adjustment until the adjustment completes as shown in the procedure. If the procedure does not complete, the ICC system is inoperable.**
- **If CONSULT-II is used with no connection of CONSULT-II CONVERTER, malfunctions might be detected in self-diagnosis depending on control unit which carry out CAN communication.**

1. Turn ignition switch OFF.
2. Connect CONSULT-II and CONSULT-II CONVERTER on the data link connector.

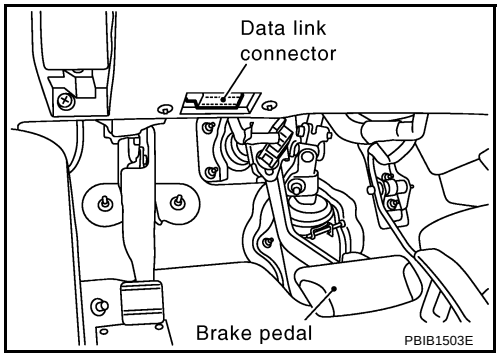

3. Start the engine, wait for at least 10 sec., and touch “START (NISSAN BASED VHCL)”.

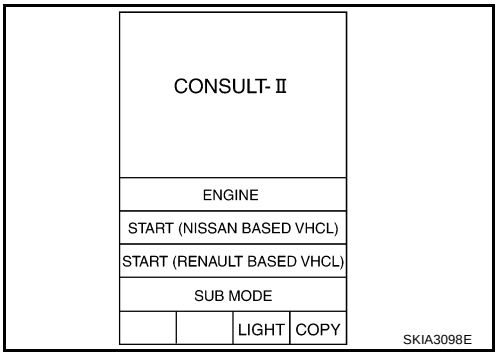


4. Touch “ICC”.
If “ICC” is not indicated, go to GI-40, "CONSULT-II Data Link Connector (DLC) Circuit" .

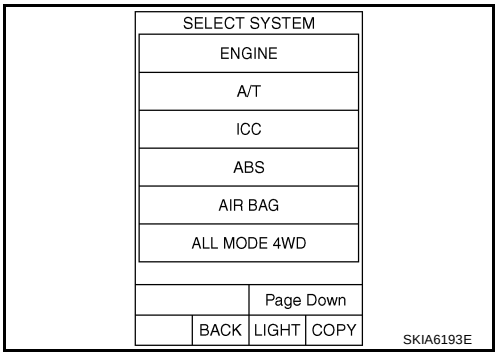


5. Touch “WORK SUPPORT”.

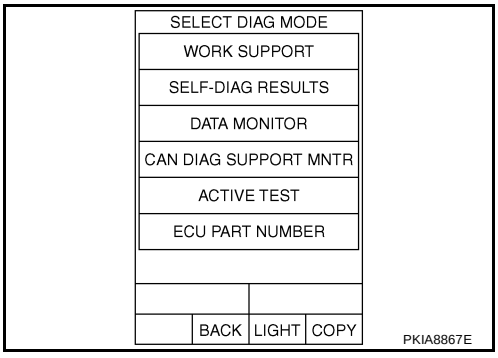


6. Touch “LASER BEAM ADJUST”.

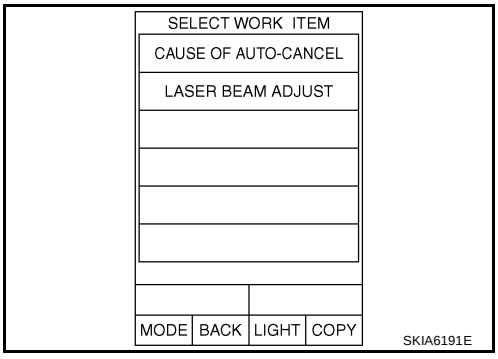


7. Touch “START”.

**CAUTION:**

**If the adjustment screen does not appear on CONSULT-II 10 sec. after touching “LASER BEAM ADJUST” screen, the following causes may be considered:**

- **Target is not set accurately.**
- **There is not enough space beside the target.**
- **Deformation of vehicle or the surrounding equipment unit, bracket, or the surrounding equipment is causing inappropriate installation of sensor and aiming may be set out of the adjustable range.**

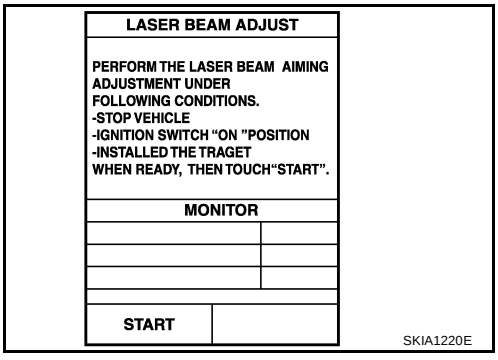

- **The area is not suitable for the adjustment work.**
- **ICC sensor is not clean.**

8. After the CONSULT-II displays “ADJUST THE VERTICAL OF LASER” turn the up-down direction adjusting screw until “U/D CORRECT” value is set in the range of ±4.

   **CAUTION:**
   **Turn the screw slowly. The value change on display is slower than actual movement of the ICC sensor. Wait for 2 seconds every time the screw is turned half a rotation.**

   **NOTE:**
   Turning the screw to the right lowers the aiming and to the left lifts the aiming.

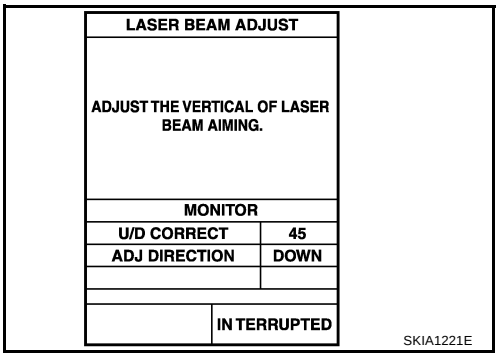


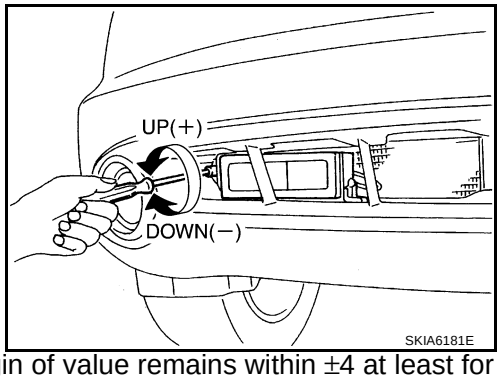


9. When “U/D CORRECT” value indicates ±4, confirm that the margin of value remains within ±4 at least for 2 seconds with no equipment or hand touching the ICC sensor.
   When “COMPLETED THE VERTICAL AIMING OF LASER BEAM” appears on screen, touch “END”.

   **CAUTION:**
   **Be sure that the margin of “U/D CORRECT” is within ±4 with ICC sensor unit is untouched.**

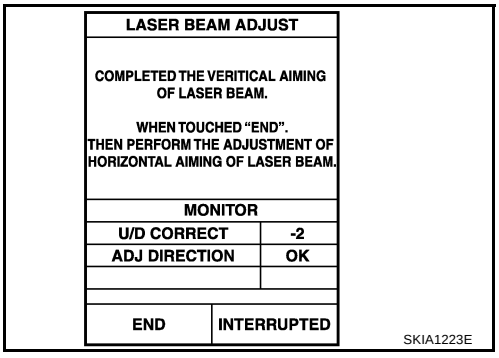


10. Confirm that “ADJUSTING AUTOMATIC HORIZONTAL LASER BEAM AIMING” is on screen and wait for a while (maximum: 10 seconds).

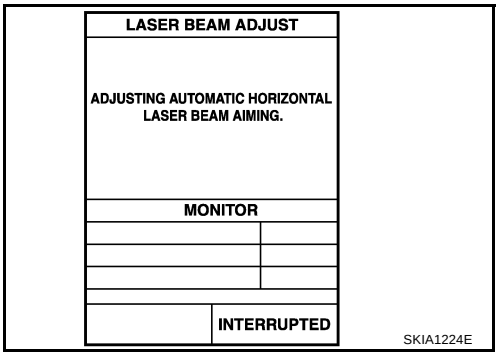

11. Confirm that “NORMALLY COMPLETED” is displayed on CONSULT-II and close the aiming adjustment procedure by touching “END”.

**CAUTION:**
**Complete all the procedures once “LASER BEAM ADJUST” mode is entered in CONSULT-II. When the procedure is discontinued, the ICC system is inoperable.**

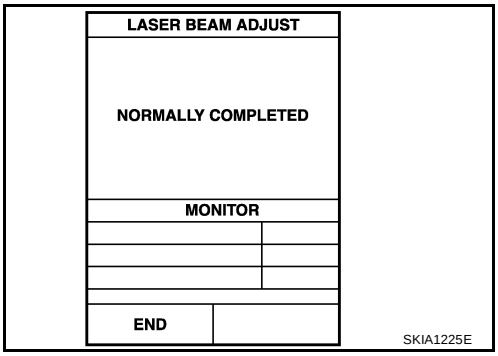


## CHECK AFTER THE ADJUSTMENT

Test the ICC system operation by running test. Refer to ACS-9, "ICC System Running Test" .

# ELECTRICAL UNITS LOCATION

PFP:25230

## Component Parts and Harness Connector Location

AKS006YN

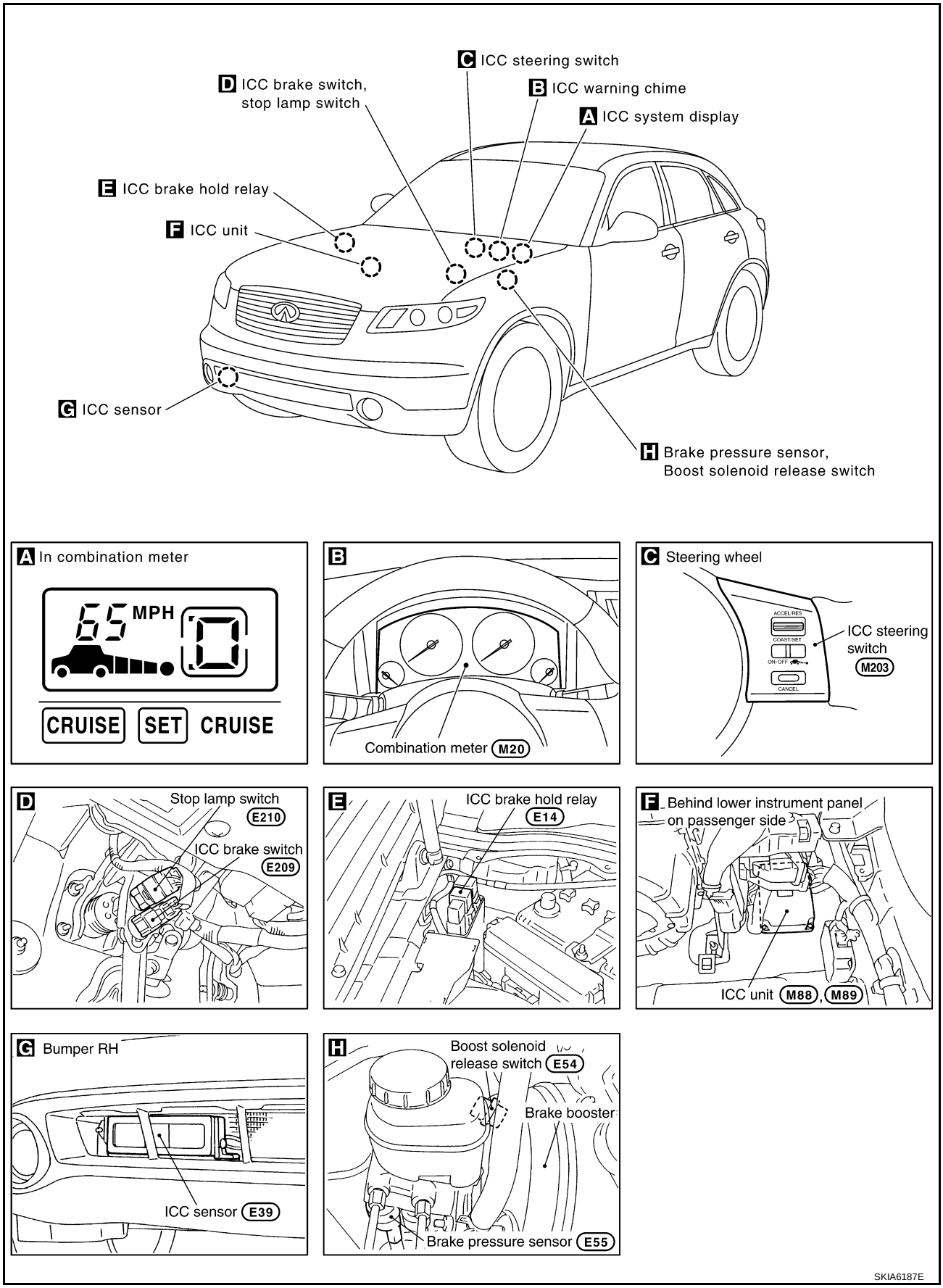

# WIRING DIAGRAM

PFP:00000

## Schematic

AKS006YO

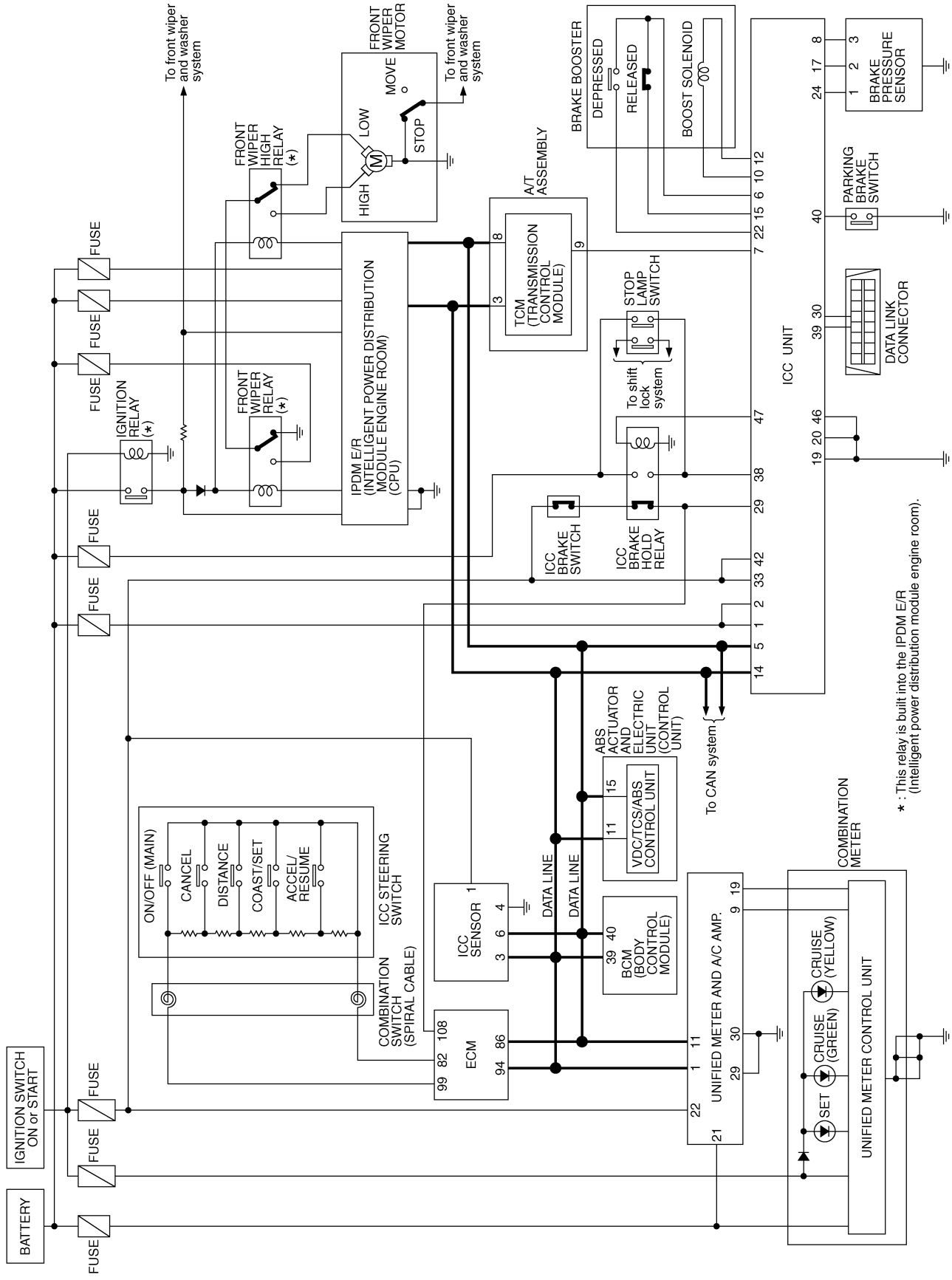


TKWM0647E

## Wiring Diagram — ICC —

AKS007WA

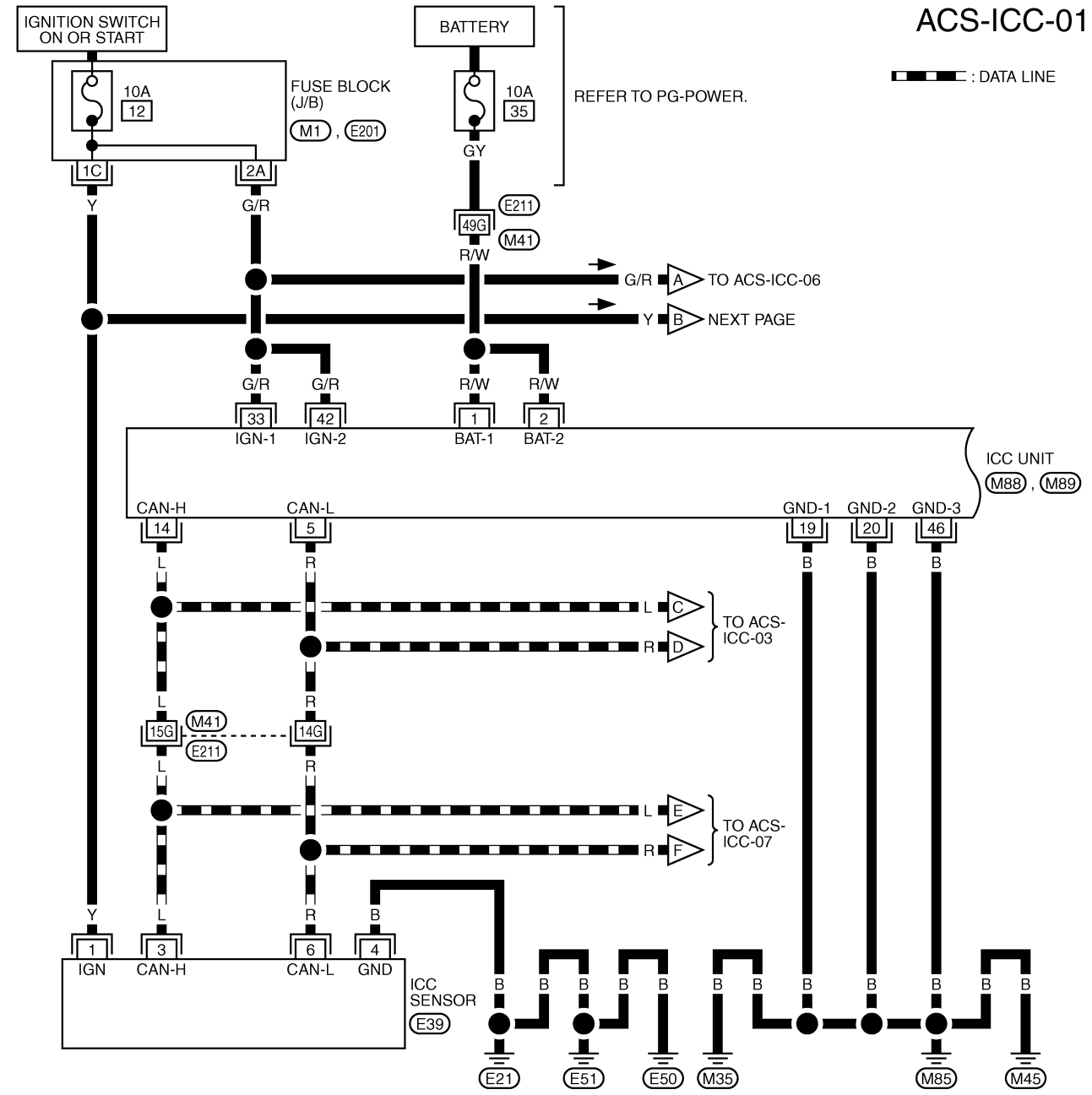


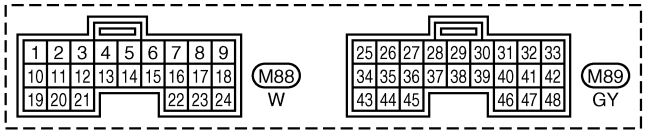



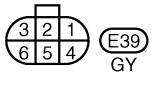


REFER TO THE FOLLOWING.

E211 -SUPER MULTIPLE JUNCTION (SMJ)

M1 , E201 -FUSE BLOCK-JUNCTION BOX (J/B)

TKWM0648E

ACS-ICC-02

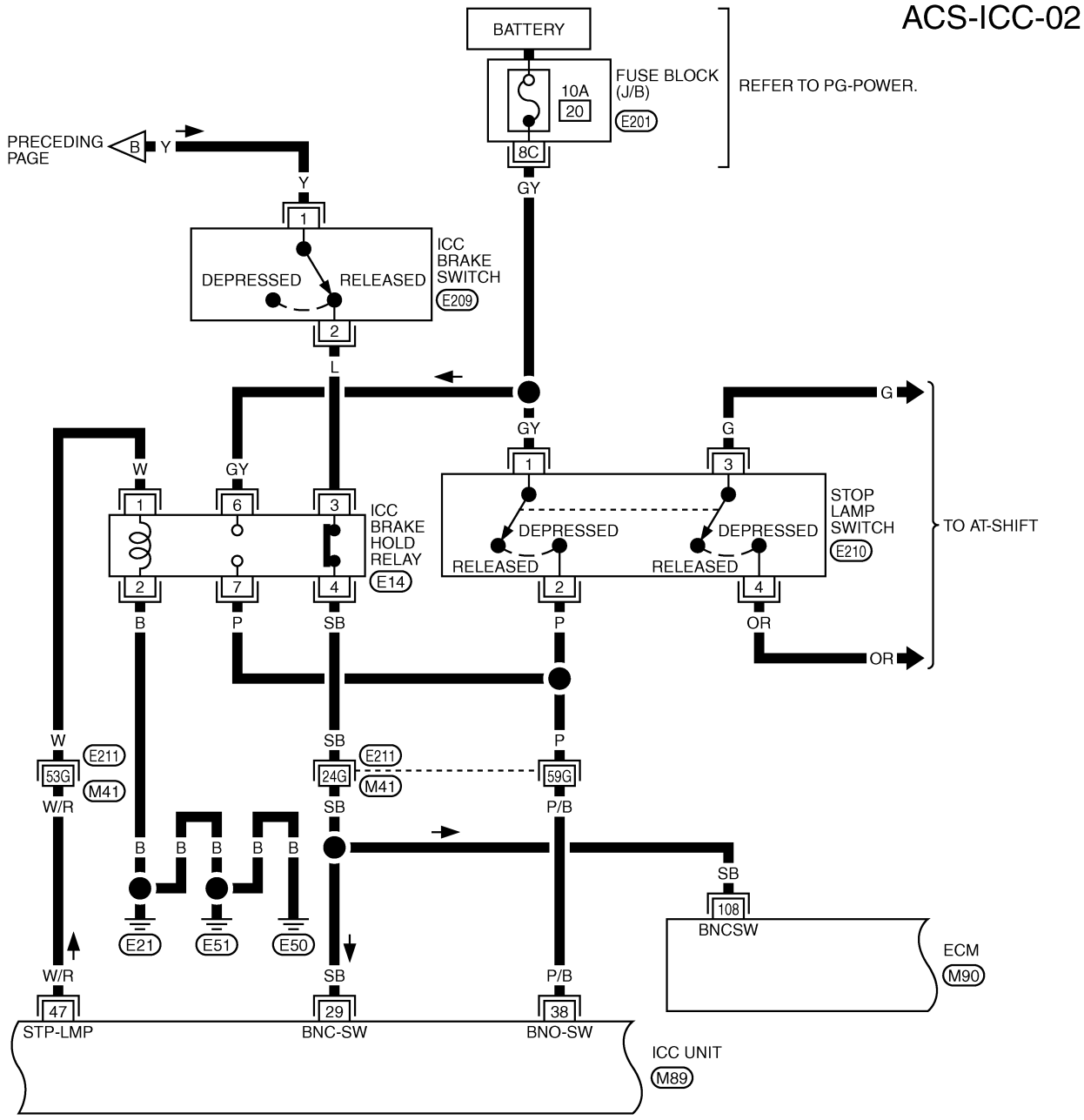


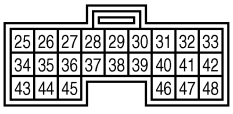





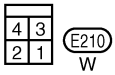


REFER TO THE FOLLOWING.

E211 -SUPER MULTIPLE JUNCTION (SMJ)

E201 -FUSE BLOCK-JUNCTION BOX (J/B)

M90 -ELECTRICAL UNITS

TKWM1090E

ACS-ICC-03

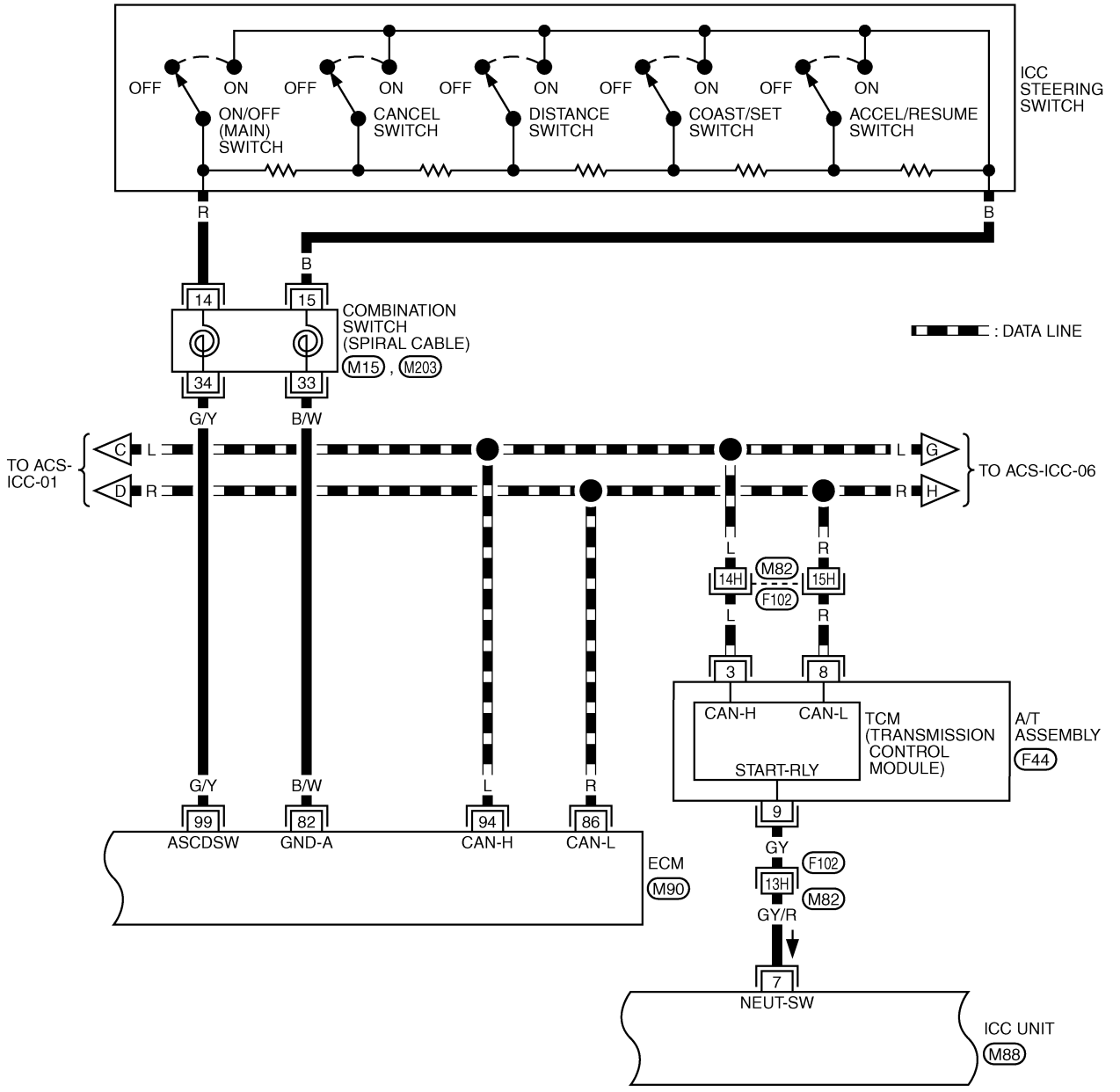


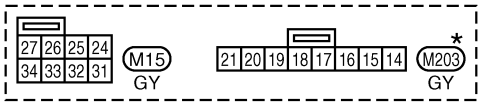


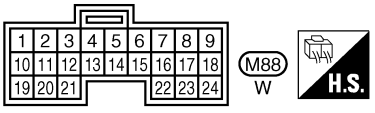





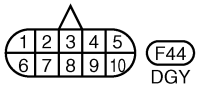


*: THIS CONNECTOR IS NOT SHOWN IN "HARNESS LAYOUT", PG SECTION.

REFER TO THE FOLLOWING.

F102 -SUPER MULTIPLE JUNCTION (SMJ)

M90 -ELECTRICAL UNITS

TKWM0650E

ACS-ICC-04

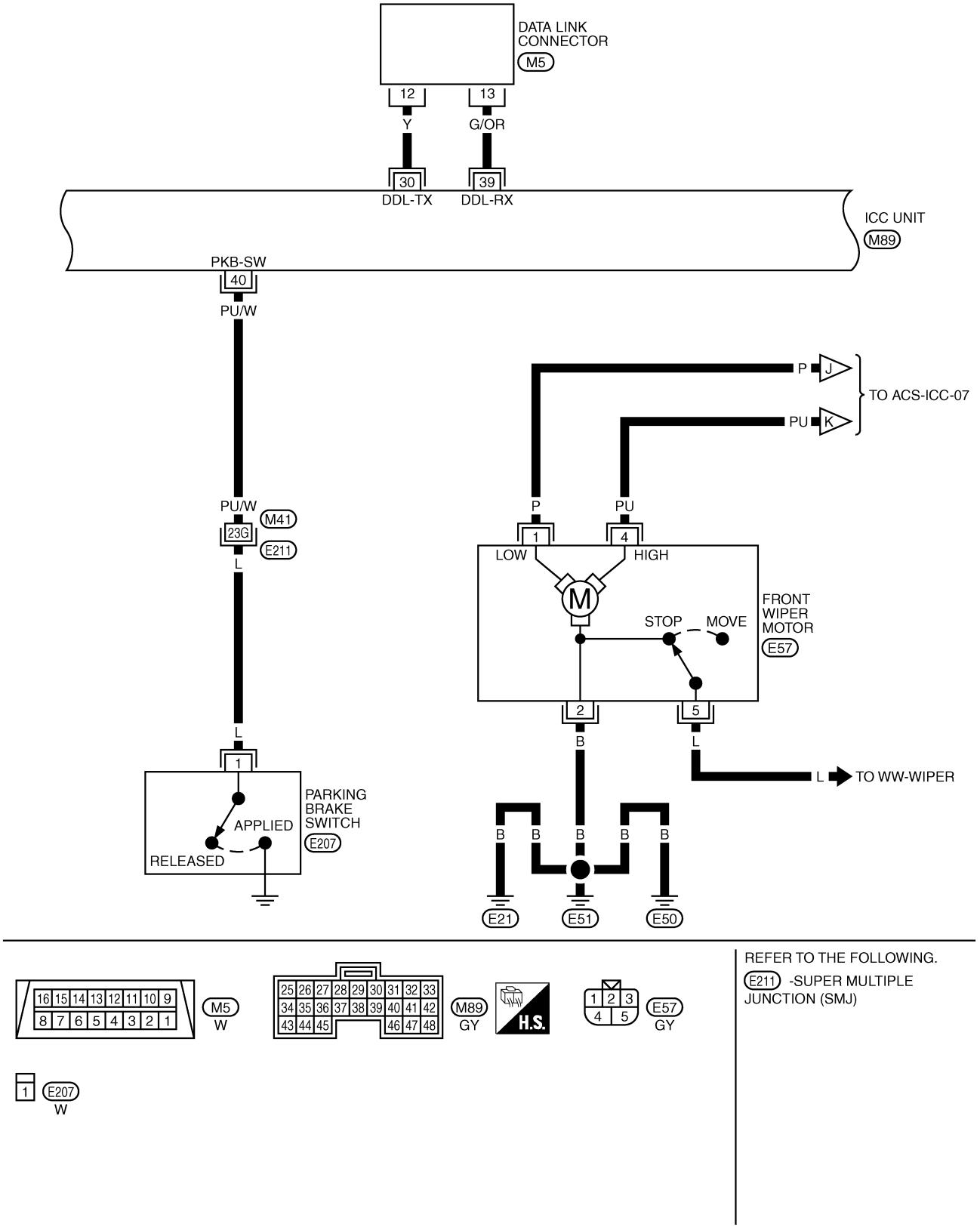


TKWM0651E

ACS-ICC-05

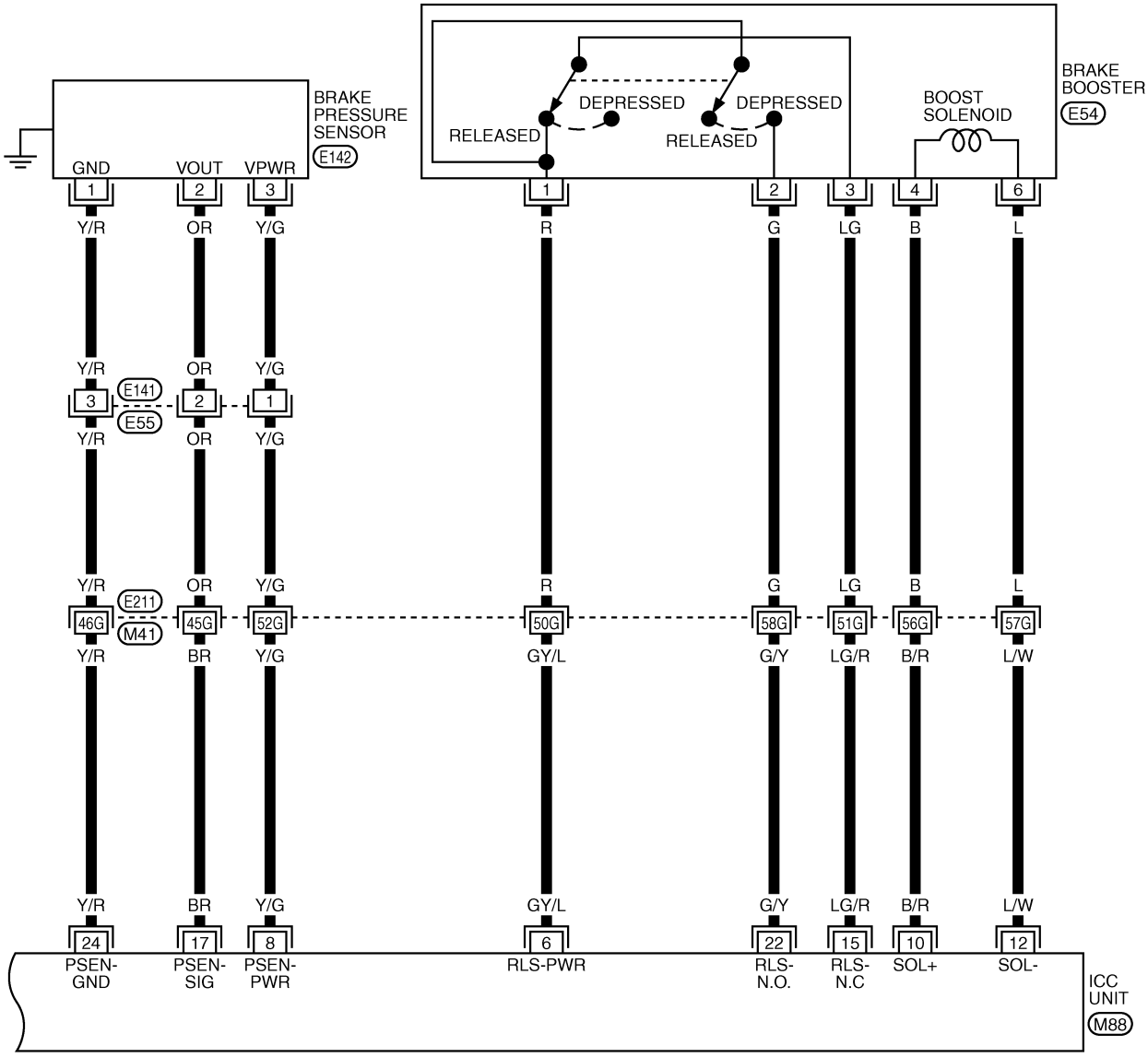


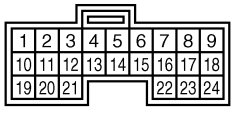



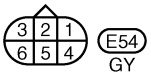


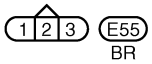


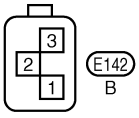


REFER TO THE FOLLOWING.

E211 -SUPER MULTIPLE JUNCTION (SMJ)

TKWM0652E

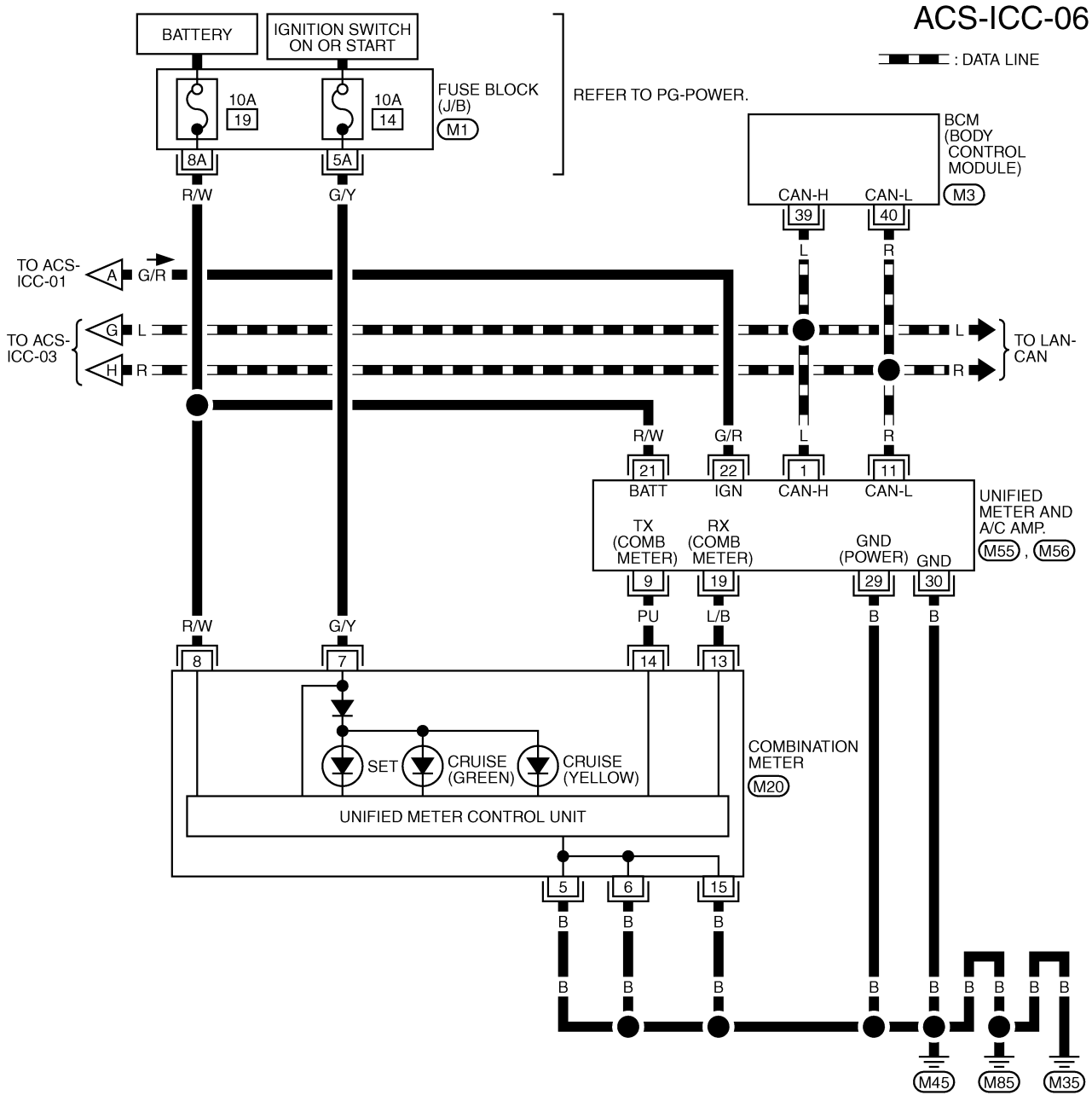


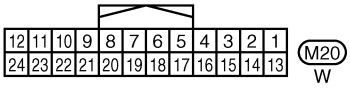


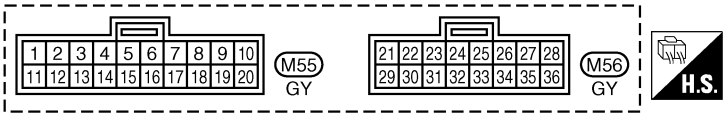


REFER TO THE FOLLOWING.

M1 -FUSE BLOCK-JUNCTION BOX (J/B)

M3 -ELECTRICAL UNITS

TKWH0246E

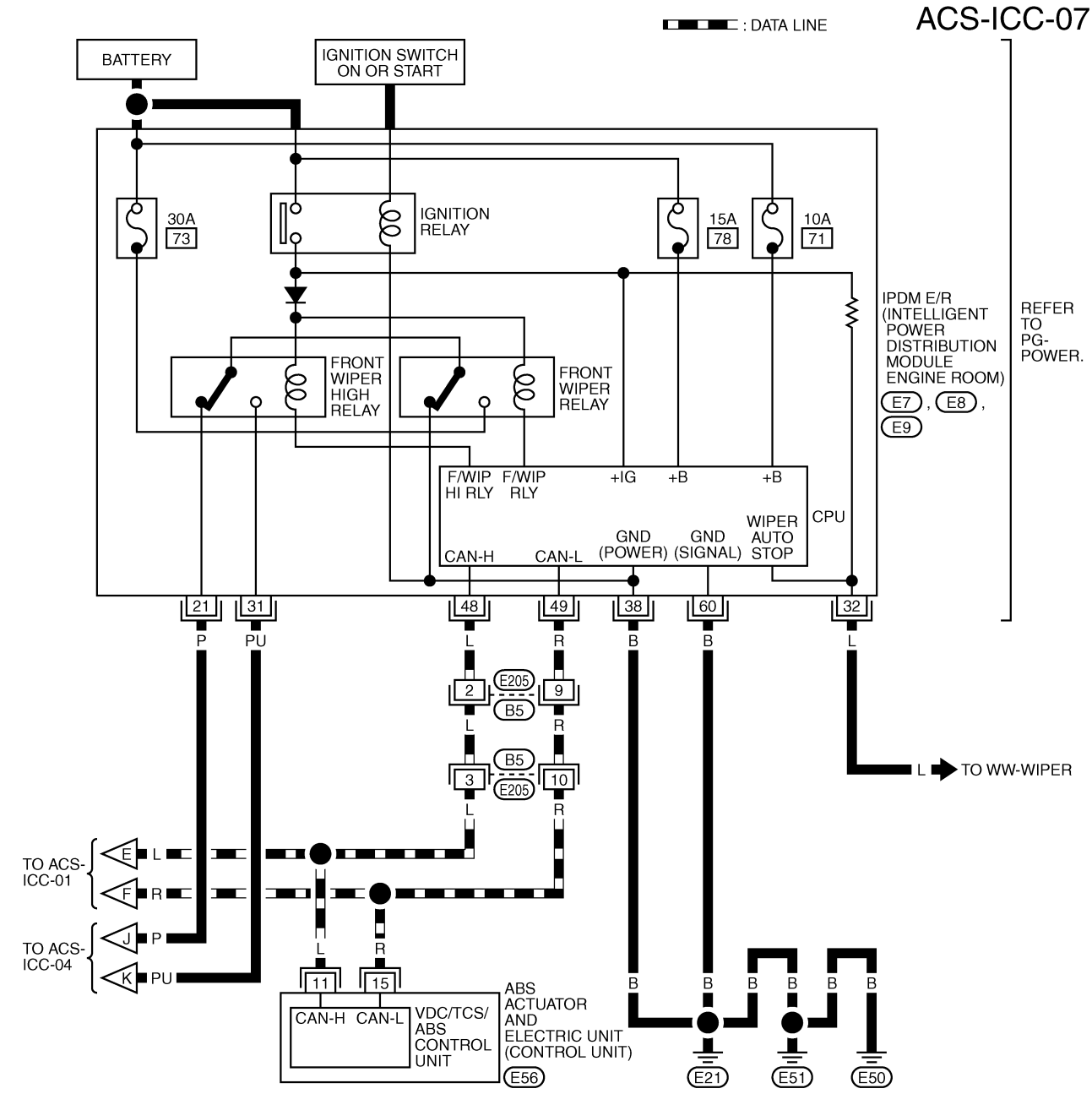
ACS-ICC-07
: DATA LINE
BATTERY
IGNITION SWITCH ON OR START
30A 73
IGNITION RELAY
15A 78
10A 71
FRONT WIPER HIGH RELAY
FRONT WIPER RELAY
IPDM E/R (INTELLIGENT POWER DISTRIBUTION MODULE ENGINE ROOM)
E7, E8, E9
REFER TO PG-POWER.
F/WIP HI RLY
F/WIP RLY
+IG
+B
+B
CAN-H
CAN-L
GND (POWER)
GND (SIGNAL)
WIPER AUTO STOP
CPU
21 P
31 PU
48 L
49 R
38 B
60 B
32 L
E205 2 9 B5
B5 3 10 E205
L TO WW-WIPER
TO ACS-ICC-01
E L
F R
TO ACS-ICC-04
J P
K PU
11 15
CAN-H CAN-L
VDC/TCS/ ABS CONTROL UNIT
ABS ACTUATOR AND ELECTRIC UNIT (CONTROL UNIT)
E56
E21
E51
E50
E7 GY
E8 W
E9 W
H.S.
B5 W
REFER TO THE FOLLOWING.
E56 -ELECTRICAL UNITS

TKWM0763E

# TERMINALS AND REFERENCE VALUE

PFP:00000

## Terminals and Reference Value for ICC Unit

AKS006YQ

| terminals (wire color) + | terminals (wire color) - | item | condition: ignition switch | condition: operation | voltage (V) |
|---|---|---|---|---|---|
| 1 (R/W)<br>2 (R/W) | Ground | Battery power supply | OFF | — | Power supply voltage (Approx. 12) |
| 5 (R) | | CAN L | ON | — | — |
| 6 (GY/L) | | Release switch power supply | ON | — | Approx. 10 |
| 7 (GY/R) | | NEUT-SW | — | — | — |
| 8 (Y/G) | 24 (Y/R) | Brake pressure sensor power supply | ON | — | Approx. 5 |
| 10 (B/R) | Ground | Brake booster solenoid (+) side | ON | — | 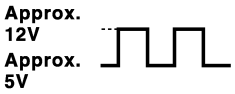  SKIA1243E |
| 12 (L/W) | | Brake booster solenoid (–) side | ON | — | 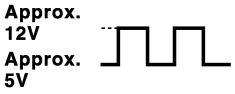  SKIA1243E |
| 14 (L) | | CAN H | ON | — | — |
| 15 (LG/R) | | Brake release switch (normal closed) | ON | Depress the brake pedal. | Approx. 0 |
| | | | | Release the brake pedal. | Approx. 10 |
| 17 (BR) | 24 (Y/R) | Brake pressure sensor signal | ON | Release the brake pedal. | Approx. 0.5 |
| | | | | Depress the brake pedal. | Approx. 0.5 - 5<br>(Note) Voltage becomes higher depending on effectiveness of depressing brakes. |
| 19 (B)<br>20 (B)<br>46 (B) | Ground | Ground | ON | — | Approx. 0 |
| 22 (G/Y) | | Brake release switch (normally open) | ON | Depress the brake pedal. | Approx. 10 |
| | | | | Release the brake pedal. | Approx. 0 |
| 29 (SB) | | ICC brake switch (normal closed) | ON | Selector lever: Not in “N” or “P” position; Depress the brake pedal. | Approx. 0 |
| | | | | Selector lever: Not in “N” or “P” position; Release the brake pedal. | Power supply voltage (Approx. 12) |
| 30 (Y) | | DDL-TX | — | — | — |

| terminals (wire color) | | item | condition | | voltage (V) |
|---|---|---|---|---|---|
| + | - | | ignition switch | operation | |
| 33 (G/R)<br>42 (G/R) | Ground | Ignition switch ON or START | ON | — | Battery voltage (Approx.12) |
| 38 (P/G) | | Stop lamp switch (normally open) | ON | Depress the brake pedal. | Battery voltage (Approx.12) |
| | | | | Release the brake pedal. | Approx. 0 |
| 39 (G/OR) | | DDL-RX | — | — | — |
| 40 (PU/W) | | parking brake signal | ON | Parking brake is ON | Power supply voltage (Approx. 12) |
| | | | | Parking brake is OFF | Approx. 0 |
| 47 (W/R) | | Stop lamp drive output signal | ON | Brake operating with ICC system | Battery voltage (Approx.12) |
| | | | | Brake not operating with ICC system | Approx. 0 |

## Terminals and Reference Value for ICC Sensor

AKS006YR

| terminals (wire color) | | item | condition | | voltage (V) |
|---|---|---|---|---|---|
| + | – | | ignition switch | operation | |
| 1 (Y) | Ground | ICC sensor power | ON | — | Battery voltage (Approx.12) |
| 3 (L) | | CAN H | ON | — | — |
| 6 (R) | | CAN L | ON | — | — |
| 4 (B) | | Ground | ON | — | Approx. 0 |

# TROUBLE DIAGNOSIS — GENERAL DESCRIPTION

PFP:00004

## Work Flow

AKS006YT

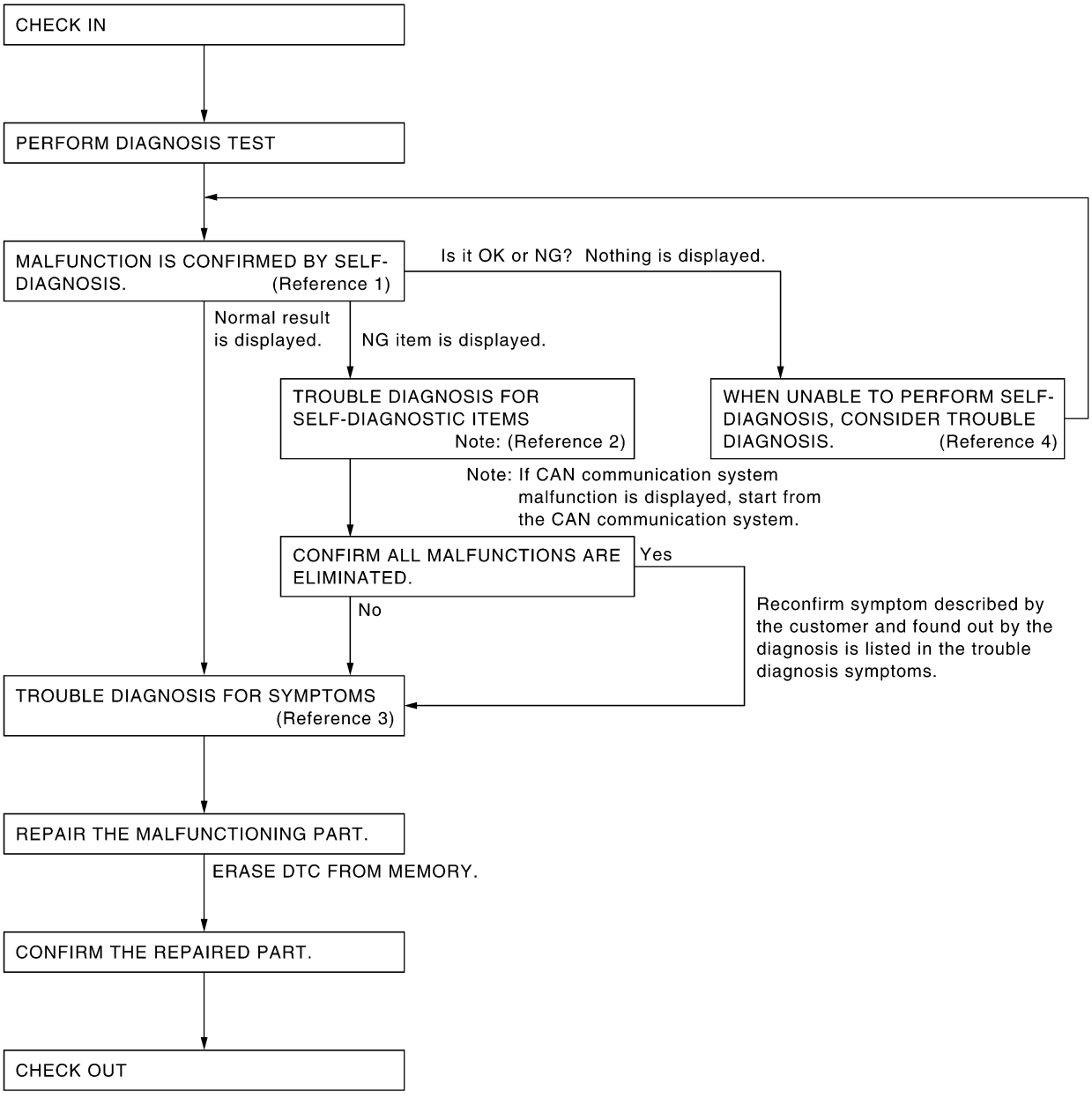


SKIA1227E

- Reference 1··· Refer to ACS-35, "Self-Diagnostic Function" .
- Reference 2··· Refer to ACS-40, "Diagnostic Trouble Code (DTC) Chart" .
- Reference 3··· Refer to ACS-59, "Symptom Chart" .
- Reference 4··· Refer to GI-40, "CONSULT-II Data Link Connector (DLC) Circuit" /ACS-37, "SELF-DIAGNOSIS BY ICC SYSTEM DISPLAY WILL NOT RUN." .

## CONSULT-II Function

AKS006YU

### DESCRIPTION

CONSULT-II executes following functions by combining data reception and command transmission via communication line from ICC unit.

| Test mode | Function |
|---|---|
| WORK SUPPORT | ● Monitors aiming direction to facilitate laser beam aiming operation.<br>● Indicates causes of automatic cancellation of the ICC system. |
| SELF-DIAGNOSTIC RESULTS | Displays malfunctioning system memorized in ICC unit. |
| DATA MONITOR | Displays real-time input/output data of ICC unit. |
| CAN DIAG SUPPORT MNTR | The results of transmit/receive diagnosis of CAN communication can be read. |
| ACTIVE TEST | Enables operation check of electrical loads by sending driving signal to them. |
| ECU PART NUMBER | Displays part number of ICC unit. |

### CONSULT-II INSPECTION PROCEDURE

**CAUTION:**

**If CONSULT-II is used with no connection of CONSULT-II CONVERTER, malfunctions might be detected in self-diagnosis depending on control unit which carry out CAN communication.**

1. Turn ignition switch OFF.
2. Connect “CONSULT-II” and “CONSULT-II CONVERTER” to data link connector, which is located under LH dash panel near the hood opener handle.
3. Turn ignition switch ON.

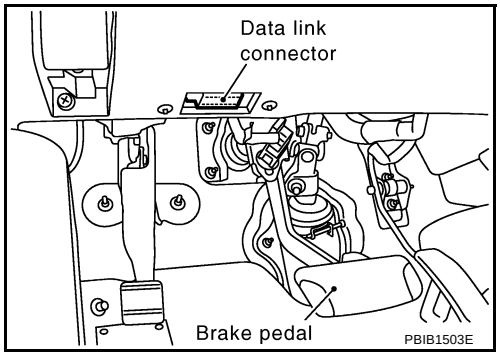


4. Touch “START (NISSAN BASED VHCL)”.

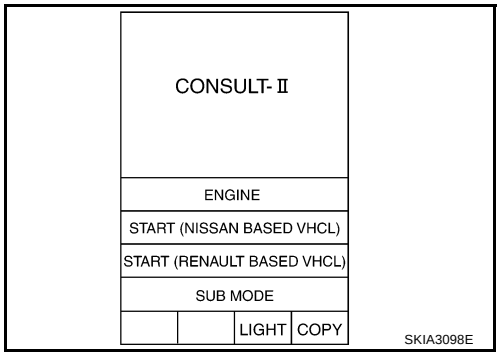


5. Touch “ICC” on the selection screen.
   If “ICC” is not indicated, go to GI-40, "CONSULT-II Data Link Connector (DLC) Circuit" .

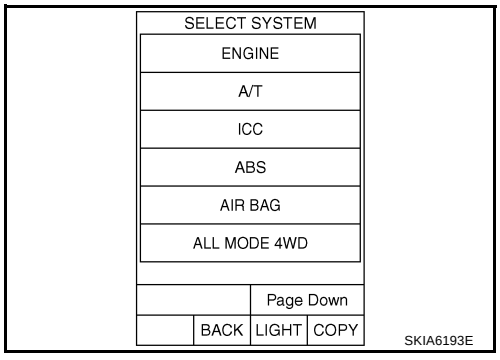

6. Touch any of “WORK SUPPORT”, “SELF-DIAG RESULTS”, “DATA MONITOR”, “CAN DIAG SUPPORT MNTR”, “ACTIVE TEST” and “ECU PART NUMBER” on selection screen.

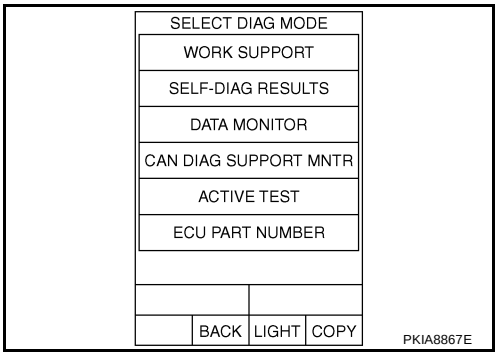


## WORK SUPPORT

### Work Item

| Operation | Function |
|---|---|
| CAUSE OF AUTO-CANCEL | Indicates causes of automatic cancellation of the ICC system. |
| LASER BEAM ADJUST | Outputs laser beam, calculates dislocation of the beam, and indicates adjustment direction. |

### Cause of Auto-Cancel

1. Touch “WORK SUPPORT” on the selection screen, refer to ACS-30, "CONSULT-II INSPECTION PROCEDURE" .
2. Touch “CAUSE OF AUTO-CANCEL” on the selection screen.
3. Cause of automatic cancellation screen will be shown.

**CAUTION:**
**Last five cancel (system cancel) causes are displayed.**

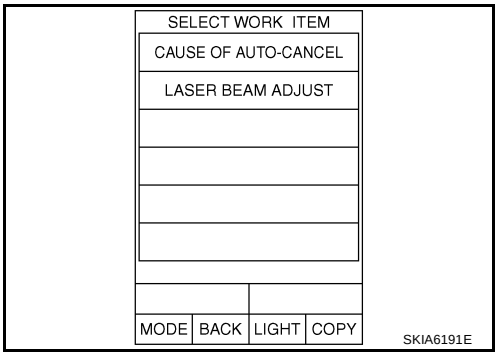


### Display Item List

| Cause of cancellation | Description |
|---|---|
| OPERATING WIPER | Windshield wipers were operated at HI or LO speed operation. |
| OPERATING ABS | ABS function was operated. |
| OPERATING TCS | TCS function was operated. |
| OPERATING VDC | VDC function was operated. |
| OPE SW VOLT CIRC | Outside the standard control switch input voltage was detected. |
| LASER SUN BEAM | Intense light such as sunlight entered ICC sensor light sensing part. |
| LASER TEMP | Temperature around ICC sensor became low. |
| OP SW DOUBLE TOUCH | ICC steering switches were pressed at the same time. |
| VDC/TCS OFF SW | VDC OFF switch was pressed. |
| WHEEL SPD UNMATCH | Wheel speed became different from AT vehicle speed. |
| TIRE SLIP | Wheel slipped. |
| PKB SW ON | Parking brake is applied. |
| IGN LOW VOLT | Power supply voltage became low. |
| NO RECORD | — |

### Laser Beam Adjust

For details, refer to ACS-12, "LASER BEAM AIMING ADJUSTMENT" .

## SELF-DIAGNOSTIC RESULTS

For details, refer to ACS-40, "Diagnostic Trouble Code (DTC) Chart" .

## DATA MONITOR

### Operation Procedure

1. Touch “DATA MONITOR” on the selection screenACS-30, "CONSULT-II INSPECTION PROCEDURE" .
2. Touch any of “ECU INPUT SIGNALS”, “MAIN SIGNALS”, and “SELECTION FROM MENU” on selection screen.
3. Touch “SETTING”.
4. Display the data monitor.
5. If necessary, touch “COPY” in turn, and print data.

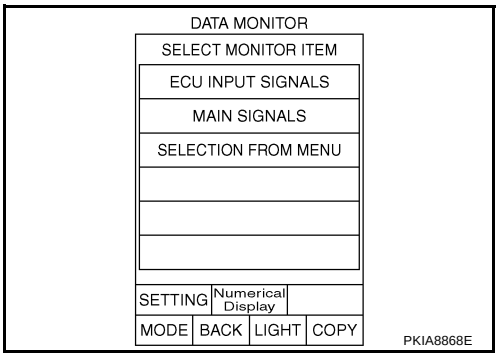


### Monitored Item

×: Applicable

| Monitored Item [unit] | MAIN SIGNALS | ECU INPUT SIGNALS | SELECTION FROM MENU | Description |
|---|---|---|---|---|
| VHCL SPEED SE [km/h] or [mph] | × | × | × | Indicates vehicle speed calculated from wheel speed sensor signal. |
| SET VHCL SPD [km/h] or [mph] | × | | × | Indicates set vehicle speed memorized in ICC unit. |
| THRTL OPENING [%] | × | × | × | Indicates throttle angle calculated from signal voltage of throttle position sensor. |
| ENGINE RPM [rpm] | | × | × | Indicates engine speed read by ICC unit via CAN communication (ECM transmits engine speed via CAN communication). |
| DISTANCE ADJ [SHOR/MID/LONG] | × | × | × | Indicates set distance memorized in ICC unit. |
| WIPER SW [OFF/LOW/HIGH] | | × | × | Indicates wiper [OFF/LOW/HIGH] status. |
| MAIN SW [ON/OFF] | × | × | × | Indicates [ON/OFF] status as judged from control switch signal. |
| SET/COAST SW [ON/OFF] | × | × | × | Indicates [ON/OFF] status as judged from control switch signal. |
| CANCEL SW [ON/OFF] | × | × | × | Indicates [ON/OFF] status as judged from control switch signal. |
| RESUME/ACC SW [ON/OFF] | × | × | × | Indicates [ON/OFF] status as judged from control switch signal. |
| CRUISE OPE [ON/OFF] | × | | × | Indicates whether controlling or not (ON means “controlling”). |
| BRAKE SW [ON/OFF] | × | × | × | Indicates [ON/OFF] status as judged from ICC brake switch signal. |
| STOP LAMP SW [ON/OFF] | × | × | × | Indicates [ON/OFF] status as judged from stop lamp switch signal. |
| RELEASE SW NO [ON/OFF] | | × | × | Indicates [ON/OFF] status as judged from release switch signal.<br>ON when brake is depressed.<br>OFF when brake is not depressed. |
| RELEASE SW NC [ON/OFF] | | × | × | Indicates [ON/OFF] status as judged from release switch signal.<br>OFF when brake is depressed.<br>ON when brake is not depressed. |

| Monitored Item [unit] | MAIN SIGNALS | ECU INPUT SIGNALS | SELECTION FROM MENU | Description |
|---|---|---|---|---|
| IDLE SW [ON/OFF] | | × | × | Indicates [ON/OFF] status of idle switch read by ICC unit via CAN communication (ECM transmits ON/OFF status via CAN communication). |
| GEAR [1, 2, 3, 4, 5] | | × | × | Indicates AT gear position read by ICC unit via CAN communication (TCM transmits gear position via CAN communication). |
| BUZZER O/P [ON/OFF] | | | × | Indicates [ON/OFF] status of ICC war output. |
| ICC WARNING | | | × | **NOTE:** This item is displayed, but cannot monitoring. |
| VHCL SPD AT [km/h] or [mph] | | | × | Indicates vehicle speed calculated from AT vehicle speed sensor by ICC unit via CAN communication (TCM transmits AT vehicle speed sensor signal via CAN communication). |
| PRESS SENS [bar] | × | × | × | Indicates brake fluid pressure value calculated from signal voltage of pressure sensor. |
| PRESS SENS 2 | | | × | **NOTE:** This item is displayed, but cannot monitoring. |
| D RANGE SW [ON/OFF] | | × | × | Indicates [ON/OFF] status of “D” position read by ICC unit via CAN communication (TCM transmits ON/OFF condition of “D” position via CAN communication). |
| AT OD OFF [ON/OFF] | | | × | Indicates [ON/OFF] status of OD cancel output under control. |
| NP RANGE SW [ON/OFF] | | × | × | Indicates PNP switch signal read by ICC unit via CAN communication. TCM transmits PNP switch signal via CAN communication. |
| DISTANCE | | | × | **NOTE:** This item is displayed, but cannot monitoring. |
| RELATIVE SPD | | | × | **NOTE:** This item is displayed, but cannot monitoring. |
| STP LMP DRIVE [ON/OFF] | × | | × | Indicates [ON/OFF] status of brake hold relay drive output. |

## ACTIVE TEST

### Caution

- Do not perform the active test while driving.
- Active test cannot be started while ICC system warning indicator illuminates.

1. Touch “ACTIVE TEST” on selection screenACS-30, "CONSULT-II INSPECTION PROCEDURE" .
2. Touch any of “ICC BUZZER 1”, “METER LAMP”, “STOP LAMP” and “BOOSTER SOL/V 3” on selection screen.
3. Touch necessary item and “START”.
4. Active test screen will be shown.

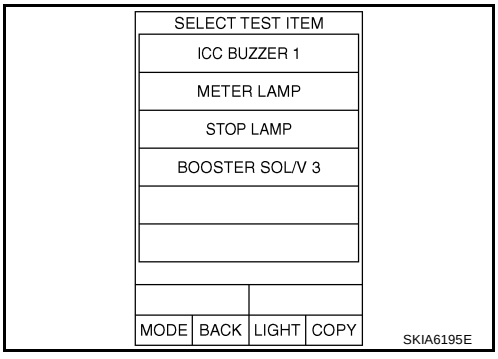

## ICC BUZZER 1

- Touch “ON” and “OFF” to check that ICC warning chime operates as in the following chart.

| BUZZER O/P | ON | OFF |
|---|---|---|
| Buzzer sound | Beep | Not activated |

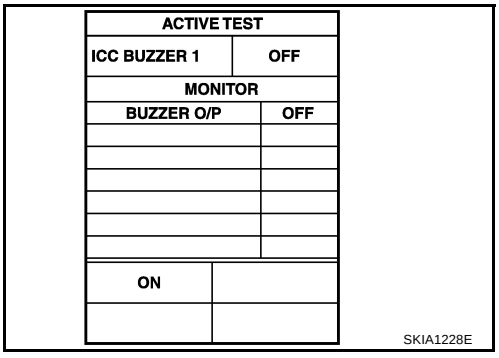

### METER LAMP

- Start engine.
- Touch “ON” and “OFF” to check that ICC system display operates as in the following chart.

| METER LAMP | ON | OFF |
|---|---|---|
| ICC system display | Full illumination | OFF |

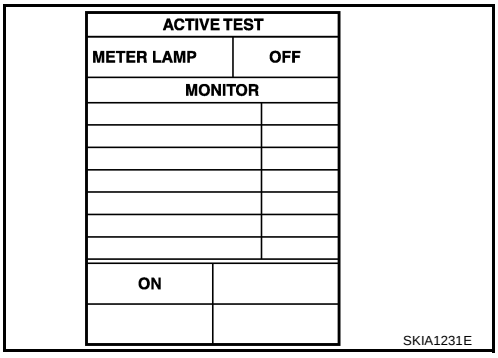


### STOP LAMP

- Touch “ON” and “OFF” to check that stop lamp operates as in the following chart.

| STP LMP DRIVE | ON | OFF |
|---|---|---|
| Stop lamp | Lamp ON | Lamp OFF |

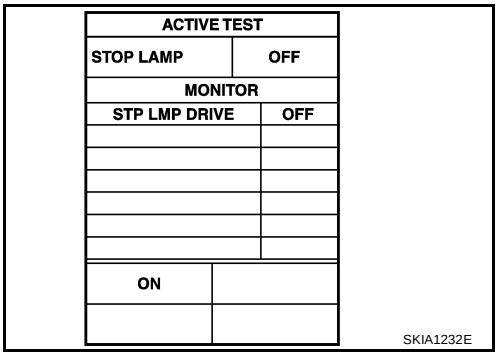


### BOOSTER SOL/V 3

- Touch any of “MODE 1”, “MODE 2”, “MODE 3” to check that following operation condition is caused by operating monitor and brake pedal.
- “START” is displayed 10 seconds after operation start. (Active test is completed.)

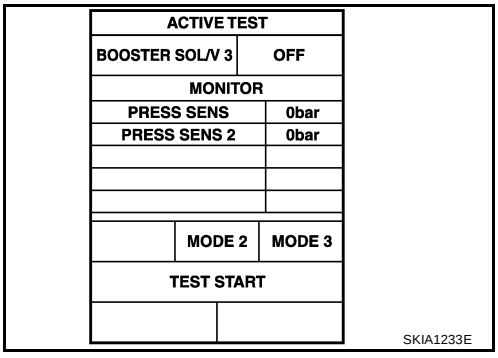


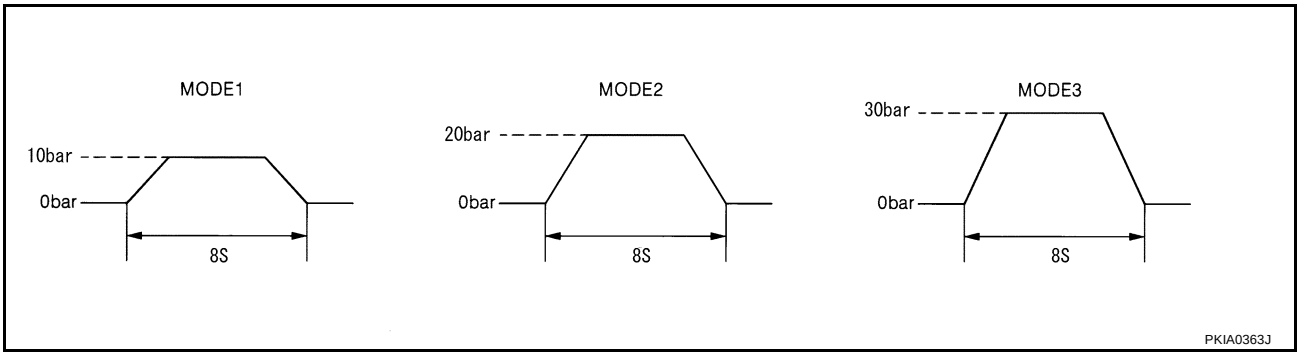


## Self-Diagnostic Function

AKS006YV

### WITH CONSULT-II

1. Go to operation check after asking the customer for symptom information. Refer to ACS-9, "ACTION TEST" .
2. Stop vehicle, turn ignition switch OFF, then connect CONSULT-II and CONSULT-II CONVERTER to data link connector.
3. With engine started, touch “START”, “ICC”, “SELF-DIAG RESULTS” on CONSULT-II screen in this order.

**CAUTION:**
**If "ICC" cannot be shown after several attempts, the ICC unit may have had malfunction. Repair or replace it. Refer to GI-40, "CONSULT-II Data Link Connector (DLC) Circuit" .**

4. Self-diagnostic result appears on screen. If "NO DTC ···" is shown, check ICC warning lamp. If any malfunction is indicated, GO TO step 5.
5. According to ACS-40, "Diagnostic Trouble Code (DTC) Chart" , perform appropriate check, and repair or replace malfunctioning part as necessary.
6. Turn ignition switch OFF.
7. Start engine and touch "START", "ICC", "SELF-DIAG RESULT", and "ERASE" on CONSULT-II display in turn to erase the memory.

   **CAUTION:**
   **If the memory does not erase, go to 5.**
8. Perform ICC system running test (drive vehicle with ICC system ON), and make sure that ICC warning lamp does not illuminate.

## WITHOUT CONSULT-II

1. Go to operation check after asking the customer for symptom information. Refer to ACS-9, "ACTION TEST" .
2. Stop the vehicle to start the self-diagnosis.
3. Turn ignition switch OFF.
4. Turn ignition switch ON, and within 5 to 10 seconds, press ACCEL/RES switch 5 times. Then press COAST/SET switch 5 times to start self-diagnosis.

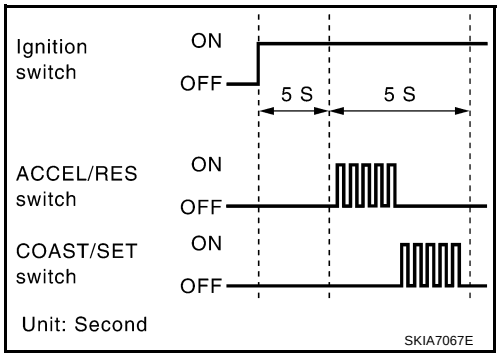


**CAUTION:**
- **Do not start the engine.**
- **Do not turn the ON/OFF switch ON.**
- **When operation above is not completed within 5 to 10 seconds, start again from above go to 3.**
- **If self-diagnosis mode cannot be started after several attempts, the ICC unit may have had malfunction. Repair or replace it. Refer to ACS-37, "SELF-DIAGNOSIS BY ICC SYSTEM DISPLAY WILL NOT RUN." .**

5. When self-diagnosis mode is started, DTC are shown on set vehicle speed indicator.

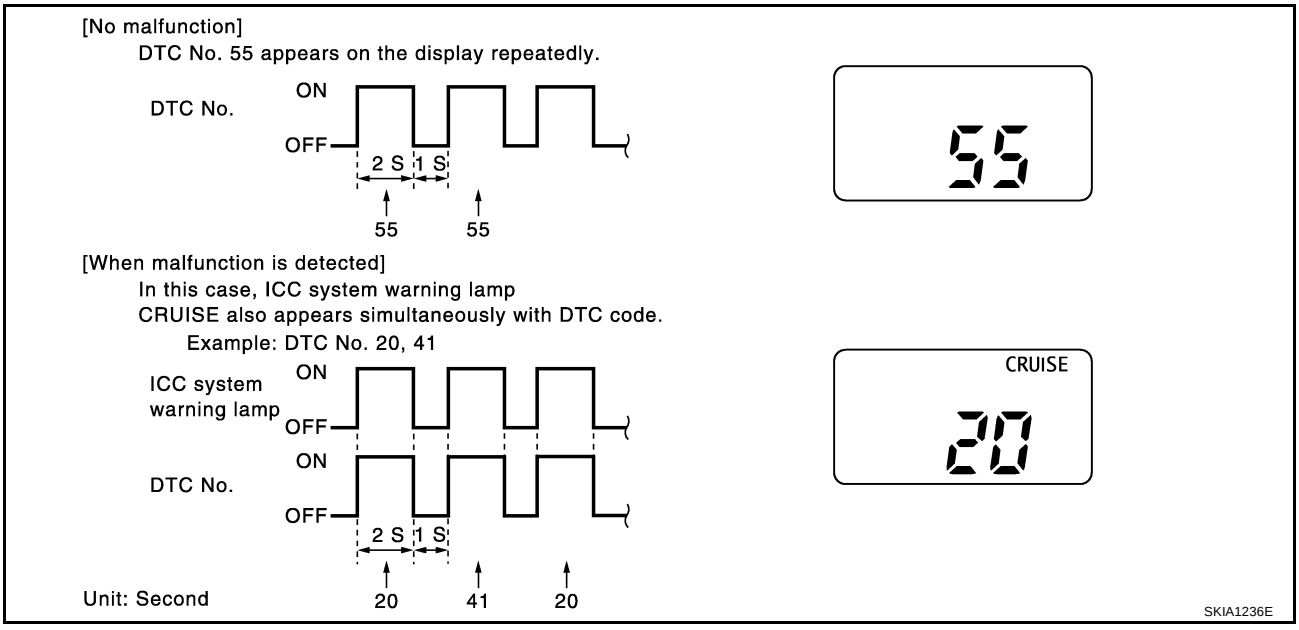


**CAUTION:**
- **DTC will disappear after 5 minutes.**

- **When more than one malfunctions are detected, a maximum of 3 code numbers can be stored; the latest malfunction will be displayed first.**

6. Check ACS-40, "Diagnostic Trouble Code (DTC) Chart" , and repair or replace if necessary.
7. After repair, erase DTC stored in the ICC unit.
8. DTC 55 will be shown.
9. Turn ignition switch OFF to exit the diagnosis.
10. Perform ICC system running test (drive vehicle with ICC system ON), and make sure that ICC warning lamp does not illuminate.

### Self-Diagnostic Erasing Method

1. Stop the vehicle and turn the ignition switch OFF.
2. Turn ignition switch ON and start self-diagnosis.
3. During self-diagnosis mode, press CANCEL switch 5 times, and DISTANCE switch 5 times in this order.

   **CAUTION:**
   - **Press them within 10 seconds after pressing CANCEL switch at first.**
   - **When operation is not completed within 10 seconds, start again from above go to 2.**
4. DTC 55 will be shown.

   **CAUTION:**
   **DTC of an existing malfunction will not be erased.**
5. Turn ignition switch OFF to exit the diagnosis.
6. Perform ICC system running test (drive vehicle with ICC system ON), and make sure that ICC system warning lamp (yellow) does not illuminate.

## SELF-DIAGNOSIS BY ICC SYSTEM DISPLAY WILL NOT RUN.

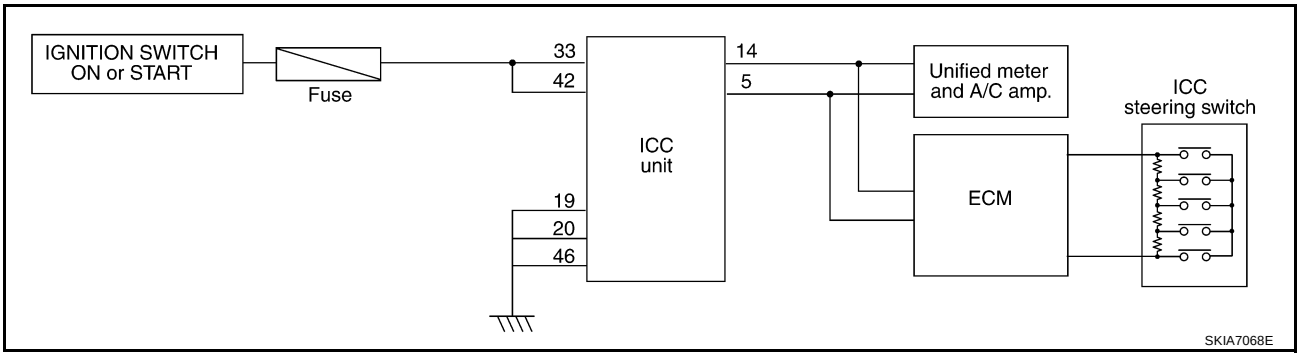


### Possible Irregular Condition

| Open or short lines | Trouble phenomenon | Malfunction causes |
|---|---|---|
| ICC unit power supply malfunction | No voltage supply from ignition switch | Fuse blown |
| | | Harness open |
| | | Harness shorted |
| | Ground cable not connected | Harness open |
| | | Harness shorted |
| ICC steering switch malfunction | No signal transmitted | Harness open |
| | | Harness shorted |
| | | Spiral cable open |
| | | Spiral cable shorted |
| | | Switch or ECM malfunction |
| CAN communication system malfunction | Signal not transmitted | Harness open |
| | | Harness shorted |
| | | CAN communication outside the standard. |

| Open or short lines | Trouble phenomenon | Malfunction causes |
|---|---|---|
| Combination meter system malfunction | Indication not possible | Indicator malfunction |
| | | Indicator segments disappear. |
| ICC unit malfunction | | |

## 1. CHECK ICC SYSTEM DISPLAY

- When ignition switch is ON, do all displays illuminate?

YES or NO

YES >> GO TO 2.
NO >> GO TO 5.

## 2. CHECK ICC STEERING SWITCH

- Check ICC steering switch. Refer to ACS-65, "ICC Steering Switch" .

OK or NG

OK >> GO TO 3.
NG >> Replace ICC steering switch.

## 3. CHECK HARNESS BETWEEN ECM AND ICC STEERING SWITCH

- Check harness and spiral cable between ECM and ICC steering switch for open or short circuit.

OK or NG

OK >> GO TO 4.
NG >> Repair or replace harness or spiral cable between ECM and ICC steering switch.

## 4. CHECK SELF-DIAGNOSIS

- Disconnect connector of ECM, and check terminals for bend and looseness. Securely connect it again.
- Enter self-diagnosis mode for ICC system?

YES or NO

YES >> INSPECTION END
NO >> GO TO 5.

## 5. CHECK POWER SUPPLY FOR ICC UNIT

- Check ICC unit power supply, and repair if necessary.
- When ignition switch is ON, do all displays illuminate?

YES or NO

YES >> Perform self-diagnosis again.
NO >> GO TO 6.

## 6. CHECK CONNECTOR FOR ICC UNIT

- Disconnect connector of ICC unit, and check terminals for bend and looseness. Securely connect it again.
- When ignition switch is ON, do all displays illuminate?

YES or NO

YES >> Perform self-diagnosis again.
NO >> GO TO 7.

## 7. CHECK CAN COMMUNICATION

- Perform self-diagnosis with CONSULT-II, and check CAN communication system for malfunction.

OK or NG

OK >> Replace combination meter.
NG >> CAN communication inspection. Refer to ACS-41, "DTC 20 CAN COMM CIRCUIT" .

# TROUBLE DIAGNOSIS FOR SELF-DIAGNOSTIC ITEMS

PFP:00000

## Diagnostic Trouble Code (DTC) Chart

AKS006YW

×:Applicable

| DTC No. | CONSULT-II screen terms | ICC system warning lamp | Fail-safe | | | Malfunctions detected where... | Reference page |
|---|---|---|---|---|---|---|---|
| | | | Vehicle-to-vehicle distance control mode | Conventional (fixed speed) cruise control mode | Brake assist (with preview function) | | |
| 11 | CONTROL UNIT | × | × | × | × | ● ICC unit internal malfunction | ACS-41 |
| 20 | CAN COMM CIRCUIT | × | × | × | × | ● ICC unit detected CAN communication malfunction. | ACS-41 |
| 31 | POWER SUPPLY CIR | × | × | × | × | ● ICC unit power supply voltage is excessively low. (less than 8V) | ACS-42 |
| 34 | POWER SUPPLY CIR2 | × | × | × | × | ● ICC unit power supply voltage is excessively high. | ACS-42 |
| 41 | VHCL SPEED SE CIRC | × | × | × | × | ● Wheel sensor malfunction.<br>● ABS actuator and electric unit ( control unit) malfunction<br>● AT vehicle speed sensor malfunction<br>● TCM malfunction | ACS-42 |
| 43 | ABS/TCS/VDC CIRC | × | × | × | × | ● VDC/TCS/ABS system malfunction | ACS-43 |
| 45 | BRAKE SW/ STOP L SW | × | × | × | × | ● Brake and stop lamp switch harness is open or shorted.<br>● Brake and stop lamp switch is ON or stuck to OFF.<br>● Brake and stop lamp switch is stuck to ON. | ACS-43 |
| 46 | OPERATION SW CIRC | × | × | × | | ● ICC steering switch harness or spiral cable is open or shorted.<br>● ICC steering switch malfunction | ACS-45 |
| 61 | PRESS SEN CIRCUIT | × | × | | × | ● Brake pressure sensor harness is open or shorted.<br>● Brake pressure sensor malfunction<br>● Brake pressure sensor input circuit malfunction | ACS-46 |
| 62 | BOOSTER SOL/V CIRCUIT | × | × | | × | ● Solenoid harness is open or shorted.<br>● Solenoid is open.<br>● Solenoid drive circuit malfunction | ACS-47 |
| 63 | RELEASE SW CIRCUIT | × | × | × | × | ● Release switch harness is open or shorted.<br>● Release switch malfunction<br>● Release switch input circuit malfunction | ACS-48 |
| 65 | PRESSURE CONTROL | × | × | | × | ● Booster malfunction | ACS-49 |
| 74 | LASER BEAM OFF CNTR | × | × | | × | ● Laser beam of ICC sensor is off the aiming point. | ACS-49 |

| DTC No. | CONSULT-II screen terms | ICC system warning lamp | Fail-safe | | | Malfunctions detected where... | Reference page |
|---|---|---|---|---|---|---|---|
| | | | Vehicle-to-vehicle distance control mode | Conventional (fixed speed) cruise control mode | Brake assist (with preview function) | | |
| 90 | STOP LAMP RLY FIX | × | × | | × | ● Normally open terminal of stop lamp relay is stuck. | ACS-50 |
| 92 | ECM CIRCUIT | × | × | × | × | ● ECM malfunction<br>● Accelerator pedal position sensor malfunction<br>● ICC unit malfunction | ACS-54 |
| 96 | NP RANGE | × | × | × | | ● Park/neutral position switch harness is open or shorted.<br>● Park/neutral position switch malfunction.<br>● TCM malfunction | ACS-55 |
| 97 | AT CIRCUIT | × | × | × | | ● TCM malfunction | ACS-56 |
| 98 | GEAR POSITION | × | × | × | | ● TCM malfunction<br>● AT turbine revolution sensor malfunction<br>● AT vehicle speed sensor malfunction | ACS-56 |
| 102 | RADAR STAIN | × | × | | × | ● ICC sensor body window has contamination. | ACS-57 |
| 103 | LASER SENSOR FAIL | × | × | | × | ● ICC sensor internal malfunction | ACS-58 |
| 104 | LASER AIMING INCMP | × | × | | × | ● Laser beam aiming of ICC sensor is not adjusted. | ACS-58 |
| 107 | LASER COMM FAIL | × | × | | × | ● CAN data received by ICC sensor is strange (from ICC unit, combination meter or ECM). | ACS-58 |
| 109 | LASER HIGH TEMP | × | × | | × | ● Temperature around ICC sensor is excessively high. | ACS-58 |

## DTC 11 CONTROL UNIT

AKS006YX

### 1. DIAGNOSTIC CHECK

1. Are any items other than “DTC 11 CONTROL UNIT” indicated on self-diagnosis display?

YES or NO

YES >> Repair or replace applicable item. Erase DTC and perform ICC system running test. Then perform self-diagnosis of ICC system again.

NO >> Replace ICC unit. Erase DTC and perform ICC system running test. Then perform self-diagnosis of ICC system again.

## DTC 20 CAN COMM CIRCUIT

AKS006YY

### 1. CHECK CAN COMMUNICATION

**With CONSULT-II**

1. Perform self-diagnosis.
2. Print self-diagnostic result.

>> After printing self-diagnostic result, go to “CAN system”. Refer to LAN-4, "Precautions When Using CONSULT-II" .

## DTC 31 POWER SUPPLY CIR, DTC 34 POWER SUPPLY CIR 2

AKS006YZ

### 1. CHECK CONNECTOR ICC UNIT

1. Turn ignition switch OFF.
2. Disconnect ICC unit connector, and connect it securely again. Then erase DTC. After that perform self-diagnosis of ICC system again.

OK or NG

OK >> GO TO 2.
NG >> ● Poor connector connection.
● Check connector. (Check connector housing for disconnected, loose, bent, and collapsed terminals. If any malfunction is detected, repair applicable part.) After repair, erase DTC, and perform ICC running test. Then perform self-diagnosis of ICC system again.

### 2. CHECK POWER SUPPLY CIRCUIT FOR ICC UNIT

1. Turn ignition switch ON.
2. Check voltage between ICC unit harness connector M89 terminal 33 (G/R), 42 (G/R) and ground.

**Battery voltage should exist.**

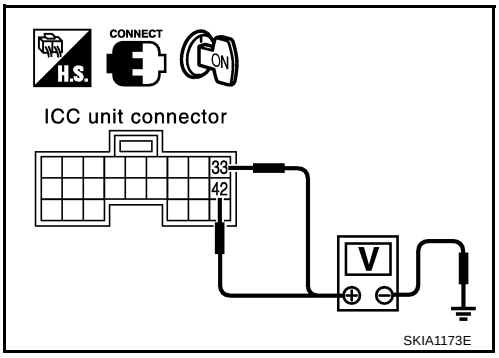


OK or NG

OK >> GO TO 3.
NG >> ● Repair ICC unit power supply harness.
● After repair, erase DTC and perform ICC system running test. Then, perform self-diagnosis of ICC system again.

### 3. CHECK GROUND CIRCUIT FOR ICC UNIT

1. Turn ignition switch OFF.
2. Disconnect ICC unit connector.
3. Check continuity between ICC unit harness connector M88 terminal 19 (B), 20 (B), M89 terminal 46 (B) and ground.

**Continuity should exist.**

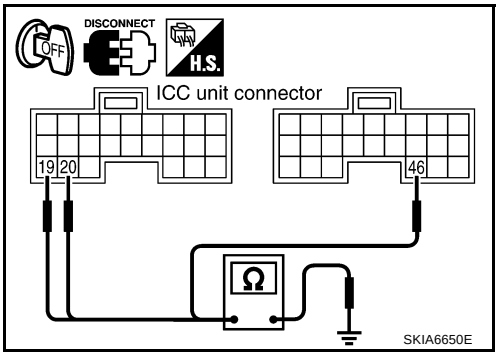


OK or NG

OK >> After replacing ICC unit, erase DTC, and perform ICC system running test. Then perform self-diagnosis of ICC system again.
NG >> ● Repair ICC unit ground harness.
● After repair, erase DTC and perform ICC system running test. Then, perform self-diagnosis of ICC system again.

## DTC 41 VHCL SPEED SE CIRC

AKS006Z0

### 1. PERFORM ICC UNIT SELF-DIAGNOSIS

1. Perform self-diagnosis. Is “DTC 43 ABS/TCS/VDC CIRC” or “DTC 20 CAN COMM CIRCUIT” indicated in self-diagnosis item display?

YES or NO

YES >> Repair or replace applicable item. Erase DTC and perform ICC system running test. Then perform self-diagnosis of ICC system again.
NO >> GO TO 2

## 2. CHECK AT VEHICLE SPEED SENSOR

**With CONSULT-II**

- With data monitor, check “VHCL SPD AT”operate normally. Refer to ACS-32, "DATA MONITOR" .

OK or NG

OK >> Replace ICC unit. Erase DTC and perform ICC system running test. Then perform self-diagnosis of ICC system again.

NG >>
- Check TCM.
- After repair, erase DTC and perform ICC system running test. Then, perform self-diagnosis of ICC system again.

# DTC 43 ABS/TCS/VDC CIRC

AKS006Z2

## 1. DIAGNOSIS CHECK 1

**With CONSULT-II**

- Perform self-diagnosis. Is “CAN COMM CIRCUIT” indicated?

YES or NO

YES >> Repair or replace applicable item. Erase DTC and perform ICC system running test. Then perform self-diagnosis of ICC system again.

NO >> GO TO 2.

## 2. DIAGNOSIS CHECK 2

**With CONSULT-II**

- Perform self-diagnosis of ABS actuator and electric unit (control unit). Is malfunction indicated?

YES or NO

YES >> Repair or replace applicable item. Erase DTC and perform ICC system running test. Then perform self-diagnosis of ICC system again.

NO >> Replace ICC unit. Erase DTC and perform ICC system running test. Then perform self-diagnosis of ICC system again.

# DTC 45 BRAKE SW/STOP L SW

AKS006Z3

## 1. CHECK CONNECTOR FOR ICC UNIT

1. Turn ignition switch OFF.
2. Disconnect ICC unit connector, and connect it securely again. Then erase DTC. After that, perform self-diagnosis of ICC system again.

OK or NG

OK >>
- Poor connector connection.
- Check connector. (Check connector housing for disconnected, loose, bent, and collapsed terminals. If any malfunction is detected, repair applicable part.) After repair, erase DTC, and perform ICC system running test. Then perform self-diagnosis of ICC system again.

NG >> GO TO 2.

## 2. CHECK STOP LAMP SWITCH AND ICC BRAKE SWITCH

**With CONSULT-II**

- With data monitor, check if “STOP LAMP SW” and “BRAKE SW” are operated normally. Refer to ACS-32, "DATA MONITOR" .

OK or NG

OK >> Replace ICC unit. Erase DTC and perform ICC system running test. Then perform self-diagnosis of ICC system again.

NG >>
- BRAKE SW: GO TO 3.
- STOP LAMP SW: GO TO 5.

## 3. BRAKE SWITCH INSTALLATION AND ADJUSTMENT INSPECTION

- Check brake switch for proper installation and adjust if necessary. Refer to BR-6, "BRAKE PEDAL" in BR.

OK or NG

OK >> GO TO 4.
NG >> After adjustment, erase DTC and perform ICC system running test. Then perform self-diagnosis of ICC system again.

## 4. CHECK ICC BRAKE SWITCH

- Check ICC brake switch. Refer to ACS-65, "ICC Brake Switch and Stop Lamp Switch" .

OK or NG

OK >> Replace ICC unit. Erase DTC and perform ICC system running test. Then perform self-diagnosis of ICC system again.
NG >> Replace ICC brake switch. Erase DTC and perform ICC system running test. Then perform self-diagnosis of ICC system again.

## 5. CHECK STOP LAMP ILLUMINATION

- Check stop lamp illumination.

OK or NG

OK >> GO TO 6.
NG >>
- Check stop lamp circuit.
- After repair, erase DTC and perform ICC system running test. Then, perform self-diagnosis of ICC system again.

## 6. CHECK ICC BRAKE HOLD RELAY

1. Turn ignition switch OFF.
2. Remove ICC brake hold relay.
3. Check continuity between ICC brake hold relay.

**6 - 7 Continuity should not exist.**
**3 - 4 Continuity should exist.**

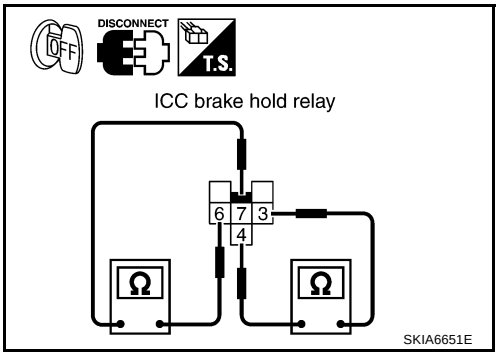


OK or NG

OK >> GO TO 7.
NG >> Replace brake hold relay. Erase DTC and perform ICC system running test. Then perform self-diagnosis of ICC system again.

## 7. CHECK ICC BRAKE HOLD RELAY CIRCUIT

1. Disconnect connectors of ICC unit and stop lamp switch.
2. Check continuity between ICC unit harness connector M89 terminal 38 (P/G) and ICC brake hold relay harness connector E14 terminal 7 (P).

   **Continuity should exist.**

3. Check continuity between ICC unit harness connector M89 terminal 38 (P/G) and stop lamp switch harness connector E210 terminal 2 (P).

   **Continuity should exist.**

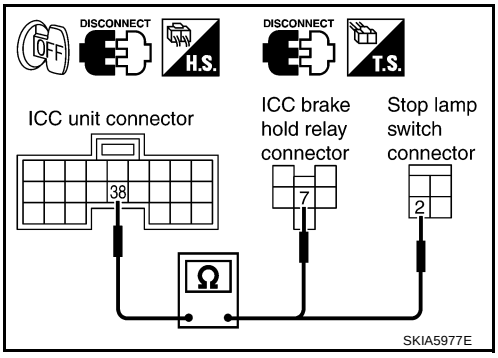


OK or NG

OK >> Replace ICC unit. Erase DTC and perform ICC system running test. Then perform self-diagnosis of ICC system again.

NG >>
- Repair harness between ICC unit and ICC brake hold relay.
- After repair, erase DTC and perform ICC system running test. Then, perform self-diagnosis of ICC system again.

# DTC 46 OPERATION SW CIRC

AKS007I0

## 1. CHECK CONNECTOR FOR ECM

1. Turn ignition switch OFF.
2. Disconnect ECM connector, and connect it securely again. Then erase DTC. After that, perform self-diagnosis of ICC system again.

OK or NG

OK >>
- Poor connector connection.
- Check connector. (Check connector housing for disconnected, loose, bent, and collapsed terminals. If any malfunction is detected, repair applicable part.) After repair, erase DTC, and perform ICC system running test. Then perform self-diagnosis of ICC system again.

NG >> GO TO 2.

## 2. CHECK ICC STEERING SWITCH

- Check ICC steering switch, refer to ACS-65, "ICC Steering Switch" .

OK or NG

OK >> GO TO 3.

NG >> Replace ICC steering switch (steering wheel assembly). Erase DTC and perform ICC system running test. Then perform self-diagnosis of ICC system again.

## 3. CHECK ICC STEERING SWITCH SIGNAL CIRCUIT

1. Turn ignition switch OFF.
2. Disconnect connectors of ECM and spiral cable.
3. Check continuity between ECM harness connector M90 terminal 82 (B/W), 99 (G/Y) and spiral cable M15 terminal 33 (B/W), 34 (G/Y).

**82 - 33, 99 - 34** **Continuity should exist.**

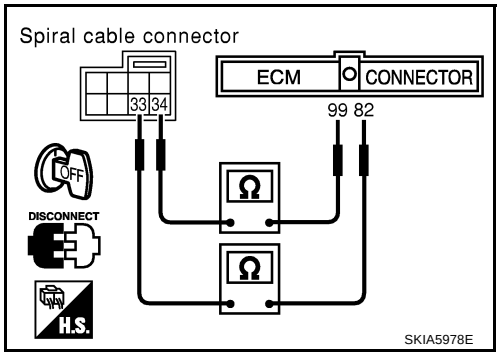


4. Check continuity between spiral cable (on vehicle) harness connector M15 terminal 33, 34 and spiral cable (on switch) harness connector M203 terminal 14,15.

**34 - 14, 33 - 15** **Continuity should exist.**

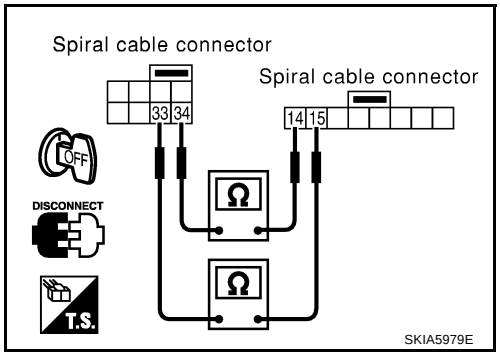


OK or NG

OK >> Replace ECM. Erase DTC and perform ICC system running test. Then perform self-diagnosis of ICC system again.

NG >>
- Repair harness between ICC unit and spiral cable.
- After repair, erase DTC and perform ICC system running test. Then, perform self-diagnosis of ICC system again.

# DTC 61 PRESS SEN CIRCUIT

AKS006Z5

## 1. CHECK CONNECTOR BRAKE PRESSURE SENSOR AND ICC UNIT

1. Turn ignition switch OFF.
2. Disconnect connectors of brake pressure sensor and ICC unit, and connect them securely again. Then erase DTC. After that, perform self-diagnosis of ICC system again.

OK or NG

OK >>
- Poor connector connection.
- Check connector. (Check connector housing for disconnected, loose, bent, and collapsed terminals. If any malfunction is detected, repair applicable part.) After repair, Erase DTC, and perform ICC system running test. Then perform self-diagnosis of ICC system again.

NG >> GO TO 2.

## 2. CHECK HARNESS BETWEEN BRAKE PRESSURE SENSOR AND ICC UNIT

1. Turn ignition switch OFF.
2. Disconnect connectors of ICC unit and brake pressure sensor.
3. Check continuity between ICC unit harness connector M88 terminal 8 (Y/G), 17 (BR), 24 (Y/R) and brake pressure sensor harness connector E142 terminal 3 (Y/G), 2 (OR), 1 (Y/R).

**8 - 3, 17 - 2, 24 - 1** **Continuity should exist.**

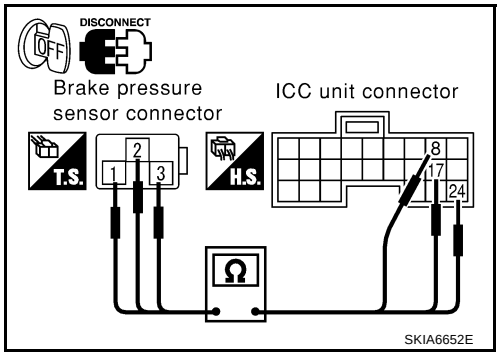


OK or NG

OK >> GO TO 3.

NG >>
- Repair harness between brake pressure sensor and ICC unit.
- After repair, erase DTC and perform ICC system running test. Then, perform self-diagnosis of ICC system again.

## 3. CHECK POWER SUPPLY CIRCUIT FOR BRAKE PRESSURE SENSOR

1. Connect ICC unit.
2. Turn ignition switch ON.
3. Check voltage between ICC unit harness connector M88 terminal 8 (Y/G) and 24 (Y/R).

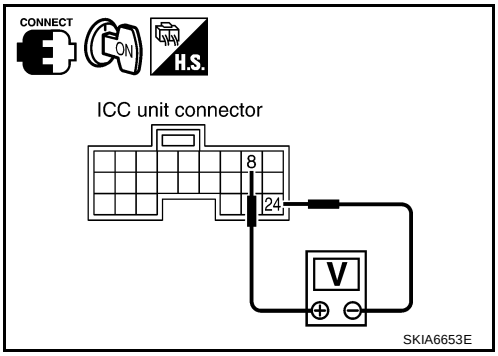


**8 (+) - 24 (–)** **Approx. 5V**

OK or NG

OK >> ● Brake pressure sensor malfunction.
● Replace brake pressure sensorBR-13, "BRAKE MASTER CYLINDER" . Erase DTC and perform ICC system running test. Then perform self-diagnosis of ICC system again.

NG >> Replace ICC unit. Clear DTC and perform driving check. Then perform self-diagnosis of ICC system again.

# DTC 62 BOOSTER SOL/V CIRCUIT

AKS006Z6

## 1. CHECK SOLENOID/RELEASE SWITCH AND ICC UNIT CHECK CONNECTOR

1. Turn ignition switch OFF.
2. Disconnect connectors of brake booster solenoid/release and ICC unit, and connect them securely again. Then erase DTC. After that perform self-diagnosis of ICC system again.

OK or NG

OK >> ● Poor connector connection.
● Check connector. (Check connector housing for disconnected, loose, bent, and collapsed terminals. If any malfunction is detected, repair applicable part.) After repair, erase DTC, and perform ICC system running test. Then perform self-diagnosis of ICC system again.

NG >> GO TO 2.

## 2. CHECK HARNESS BETWEEN SOLENOID/RELEASE SWITCH AND ICC UNIT

1. Turn ignition switch OFF.
2. Disconnect ICC unit connector and brake booster solenoid release switch connector.
3. Check continuity between ICC unit harness connector M88 terminal 10 (B/R), 12 (L/W) and brake booster harness connector E54 terminal 4 (B), 6 (L).

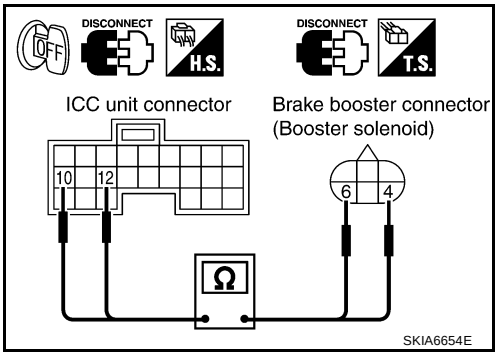


**10 - 4, 12 - 6** **Continuity should exist.**

OK or NG

OK >> GO TO 3.

NG >> ● Repair harness between brake booster solenoid/release switch and ICC unit.
● After repair, Erase DTC and perform ICC system running test. Then, perform self-diagnosis of ICC system again.

## 3. CHECK BOOSTER SOLENOID

● Check booster solenoid. Refer to ACS-65, "Booster Solenoid" .

OK or NG

OK >> Replace ICC unit. Erase DTC and perform ICC system running test. Then perform self-diagnosis of ICC system again.

NG >> ● Replace booster solenoid.
● Replace booster solenoid. Erase DTC and perform ICC system running test. Then perform self-diagnosis of ICC system again.

## DTC 63 RELEASE SW CIRCUIT

AKS006Z7

### 1. CHECK SOLENOID/RELEASE SWITCH AND ICC UNIT CHECK CONNECTOR

1. Turn ignition switch OFF.
2. Disconnect brake booster solenoid/release switch connector and ICC unit connector, and connect them securely again. Then erase DTC. After that, perform self-diagnosis of ICC system again.

OK or NG

OK >> ● Poor connector connection.
● Check connector. (Check connector housing for disconnected, loose, bent, and collapsed terminals. If any malfunction is detected, repair applicable part.) After repair, erase DTC, and perform ICC system running test. Then perform self-diagnosis of ICC system again.

NG >> GO TO 2.

### 2. CHECK HARNESS SOLENOID/RELEASE SWITCH AND ICC UNIT

1. Turn ignition switch OFF.
2. Disconnect brake booster solenoid/release switch connector and ICC unit connector.
3. Check continuity between ICC unit harness connector m88 terminal 6 (GY/L), 15 (LG/R), 22 (G/Y) and Brake booster harness connector E54 terminal 1 (R), 3 (LG), 2 (G).

**6 - 1, 15 - 3, 22 - 2 Continuity should exist.**

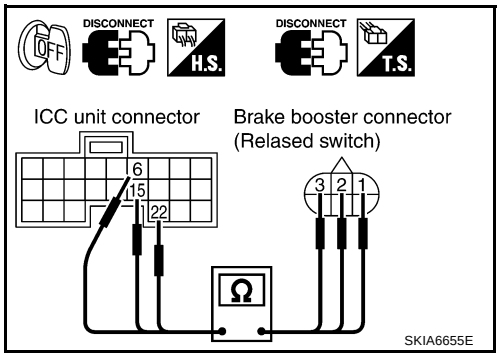


OK or NG

OK >> GO TO 3.

NG >> ● Repair harness between brake booster solenoid/release switch and ICC unit.
● After repair, Erase DTC and perform ICC system running test. Then, perform self-diagnosis of ICC system again.

### 3. CHECK RELEASE SWITCH POWER SUPPLY CIRCUIT

1. Connect ICC unit connector.
2. Turn ignition switch ON.
3. Check voltage between ICC unit harness connector M88 terminal 6 (GY/L) and ground.

**Approx. 10V**

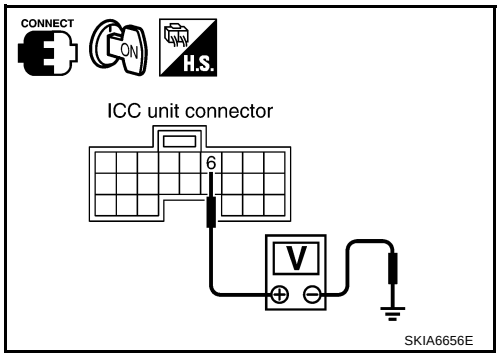


OK or NG

OK >> GO TO 4.

NG >> Replace ICC unit. Erase DTC and perform ICC system running test. Then perform self-diagnosis of ICC system again.

### 4. CHECK RELEASE SWITCH

● Check release switch. Refer to ACS-66, "Release Switch" .

OK or NG

OK >> Replace ICC unit. Erase DTC and perform ICC system running test. Then perform self-diagnosis of ICC system again.

NG >> ● Release switch malfunction.
● Replace booster. Erase DTC and perform ICC system running test. Then perform self-diagnosis of ICC system again.

## DTC 65 PRESSURE CONTROL

AKS006Z8

### 1. OPERATION CHECK

- Check foot brake pedal operates normally.

OK or NG

OK >> GO TO 2.
NG >> ● Check brake circuit.
● After repair, Erase DTC, and perform active test (BOOSTER SOL/V3) with CONSULT-II. Then perform self-diagnosis of ICC system again.

### 2. CHECK BOOSTER SOLENOID

- Check booster solenoid. Refer to ACS-65, "Booster Solenoid" .

OK or NG

OK >> GO TO 3.
NG >> ● Solenoid malfunction.
● Replace booster. Erase DTC and perform ICC system running test. Then perform self-diagnosis of ICC system again.

### 3. CHECK HARNESS BETWEEN SOLENOID/RELEASE SWITCH AND ICC UNIT

1. Turn ignition switch OFF.
2. Disconnect ICC unit connector and brake booster solenoid/release switch connector.
3. Check continuity between ICC unit harness connector M88 terminal 10 (B/R), 12 (L/W) and brake booster solenoid/release harness connector E54 terminal 4 (B), 6 (L).

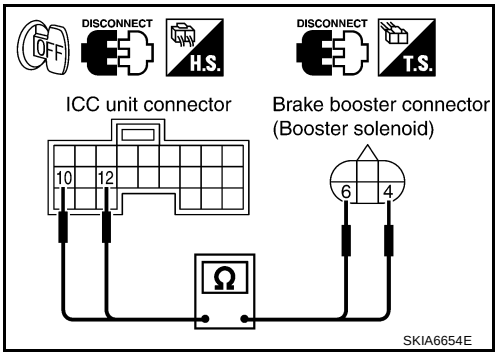


**10 - 4, 12 - 6** **Continuity should exist.**

OK or NG

OK >> Replace ICC unit. Erase DTC and perform ICC system running test. Then perform self-diagnosis of ICC system again.
NG >> ● Repair harness between brake booster solenoid/release switch and ICC unit.
● After repair, Erase DTC and perform ICC system running test. Then, perform self-diagnosis of ICC system again.

## DTC 74 LASER BEAM OFF CNTR

AKS006Z9

### 1. DIAGNOSTIC CHECK

1. Adjust laser beam aiming. Then erase DTC, and perform ICC system ICC system running test.
2. After that, perform self-diagnosis of ICC system. Is DTC 74 LASER BEAM OFF CNTR indicated?

YES or NO

YES >> ● Replace ICC sensor, and adjust laser beam aiming.
● After that, Erase DTC and perform ICC system running test. Then perform self-diagnosis of ICC system again.
NO >> INSPECTION END

## DTC 90 STOP LAMP RLY FIX

AKS006ZE

### 1. CHECK CONNECTOR ICC UNIT

1. Turn ignition switch OFF.
2. Disconnect and check ICC unit connector.

OK or NG

OK >> GO TO 2.
NG >> ● Connector malfunction.
● After repair, erase DTC, and perform ICC system running test. Then perform self-diagnosis of system.

### 2. CHECK STOP LAMP SWITCH, AND ICC BRAKE SWITCH

**With CONSULT-II**

1. Connect ICC unit connector and turn ignition switch ON.
2. With data monitor, check that “STOP LAMP SW” and “BRAKE SW” operate normally.Refer to ACS-32, "DATA MONITOR" .

OK or NG

OK >> GO TO 11.
NG >> ● BRAKE SW: GO TO 3.
● STOP LAMP SW: GO TO 8.

### 3. CHECK AND ADJUST BRAKE SWITCH

● Check brake switch for proper installation and adjust if necessary.Refer to BR-6, "BRAKE PEDAL" in “BR”.

OK or NG

OK >> GO TO 4.
NG >> After adjustment, erase DTC and perform ICC system running test. Then perform self-diagnosis of ICC system again.

### 4. CHECK ICC BRAKE SWITCH AND STOP LAMP SWITCH

● Check ICC brake switch and stop lamp switch. Refer to ACS-65, "ICC Brake Switch and Stop Lamp Switch" .

OK or NG

OK >> GO TO 5.
NG >> Replace ICC brake switch. Erase DTC and perform ICC system running test. Then perform self-diagnosis of ICC system again.

### 5. CHECK ICC BRAKE HOLD RELAY

● Disconnect ICC brake hold relay, and check continuity between ICC brake hold relay terminal 3 and terminal 4.

**Continuity should exist.**

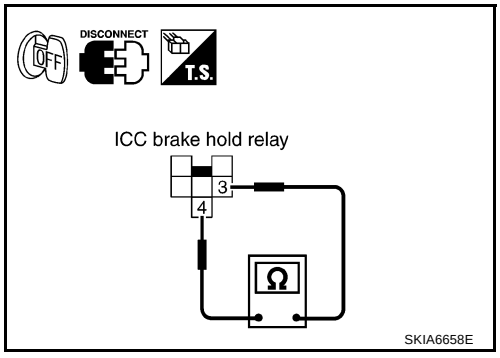


OK or NG

OK >> GO TO 6.
NG >> Replace ICC brake hold relay. Erase DTC and perform ICC system running test. Then perform self-diagnosis of ICC system again.

## 6. CHECK HARNESS THROUGH ICC BRAKE HOLD RELAY, ICC BRAKE SWITCH, ICC UNIT

1. Disconnect ICC brake hold relay, ICC brake switch, ECM and ICC unit harness connector.
2. Check continuity between ICC brake hold relay harness connector E14 terminal 3 (L) and ICC brake switch harness connector E209 terminal 2 (L).

   **Continuity should exist.**

3. Check continuity between ICC brake hold relay harness connector E14 terminal 3 (L) and ground.

   **Continuity should not exist.**

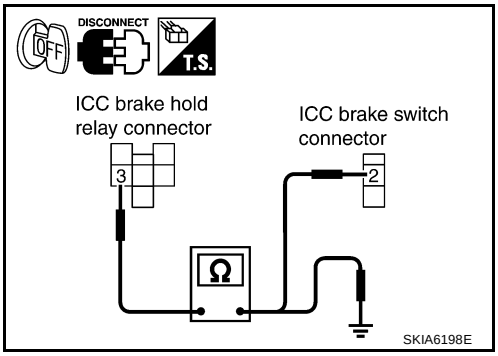


4. Check continuity between ICC brake hold relay harness connector E14 terminal 4 (SB) and ICC unit harness connector M89 terminal 29 (SB).

   **Continuity should exist.**

5. Check continuity between ICC unit harness connector M89 terminal 29 (SB) and ground.

   **Continuity should not exist.**

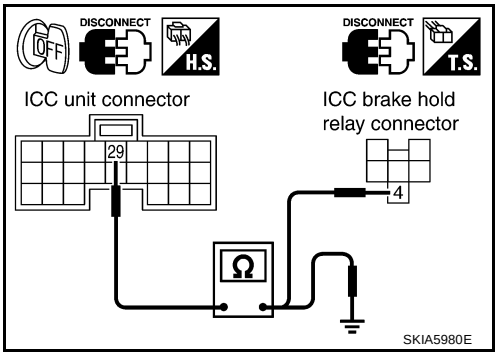


OK or NG

OK >> GO TO 7.

NG >>
- Repair harness between ICC brake hold relay and ICC brake switch.
- Repair harness between ICC brake switch and ICC unit.
- After repair, erase DTC and perform ICC system running test. Then, perform self-diagnosis of ICC system again.

## 7. CHECK ICC BRAKE SWITCH POWER SUPPLY CIRCUIT

1. Turn ignition switch ON.
2. Check voltage between ICC brake switch harness connector E209 terminal 1 (Y) and ground.

   **Approx. 12V**

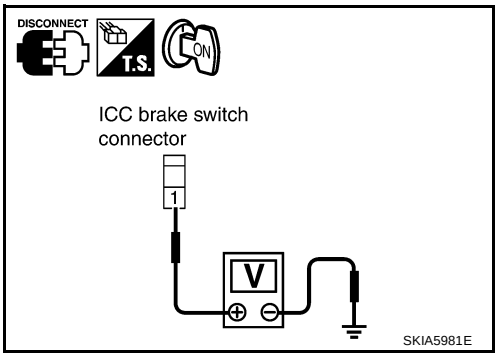


OK or NG

OK >> Replace ICC unit. Erase DTC and perform ICC system running test. Then perform self-diagnosis of ICC system again.

NG >>
- Malfunction of fuse, or ICC brake switch power supply system harness.
- After repair, erase DTC and perform ICC system running test. Then, perform self-diagnosis of ICC system again.

## 8. CHECK STOP LAMP ILLUMINATION

1. Turn ignition switch OFF.
2. Disconnect ICC brake hold relay connector.
3. Check stop lamp circuit.

OK or NG

OK >> GO TO 9.

NG >> After repair, erase DTC and perform ICC system running test. Then, perform self-diagnosis of ICC system again.

## 9. CHECK ICC BRAKE HOLD RELAY CIRCUIT

1. Connect ICC brake hold relay connector.
2. Disconnect stop lamp switch connector.
3. When brake pedal is not depressed, make sure that stop lamp does not illuminate.

OK or NG

OK >> Replace ICC unit. Erase DTC and perform ICC system running test. Then perform self-diagnosis of ICC system again.
NG >> GO TO 10.

## 10. CHECK ICC BRAKE HOLD RELAY

1. Disconnect ICC brake hold relay.
2. Check continuity between ICC brake hold relay E14 terminal 6 and terminal 7.

**Continuity should not exist.**

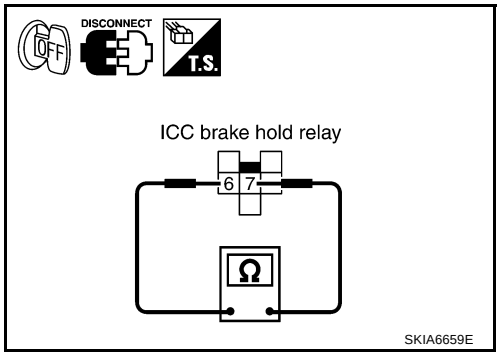


OK or NG

OK >> Replace ICC unit. Erase DTC and perform ICC system running test. Then perform self-diagnosis of ICC system again.
NG >> Replace ICC brake hold relay. Erase DTC and perform ICC system running test. Then perform self-diagnosis of ICC system again.

## 11. CHECK HARNESS THROUGH ICC UNIT, ICC BRAKE HOLD RELAY, AND GROUND

1. Disconnect connectors of ICC unit and ICC brake hold relay.
2. Check continuity between ICC unit harness connector M89 terminal 47 (W/R) and ICC brake hold relay harness connector E14 terminal 1 (W).

**47 - 1** **Continuity should exist.**

3. Check continuity between ICC unit harness connector M89 terminal 47 (W/R) and ground.

**47 - Ground** **Continuity should not exist.**

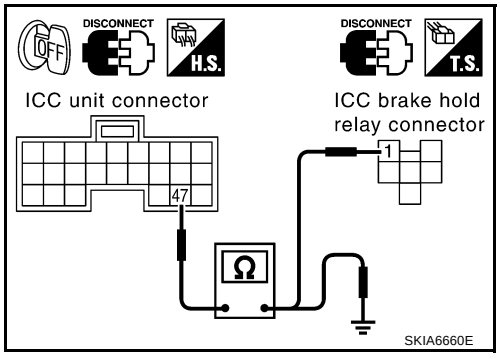


4. Check continuity between ICC brake hold relay harness connector E14 terminal 2 (B) and ground.

**Continuity should exist.**

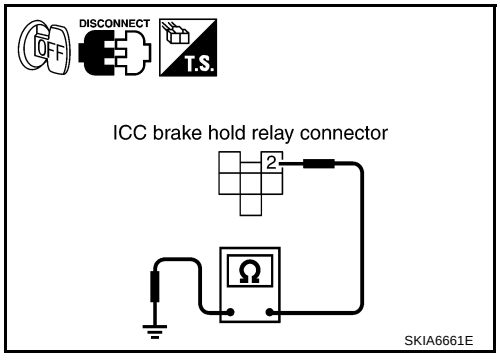


OK or NG

OK >> GO TO 12.
NG >>
- Repair harness through ICC unit, ICC brake hold relay, and ground.
- After repair, erase DTC and perform ICC system running test. Then, perform self-diagnosis of ICC system again.

## 12. CHECK ICC BRAKE HOLD RELAY

- Check continuity between ICC brake hold relay terminal 1 and terminal 2.

  **Continuity should exist.**

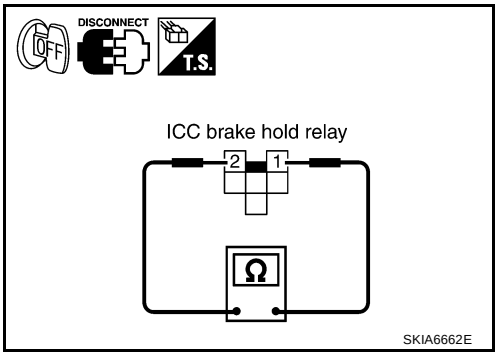


OK or NG

OK >> GO TO 13.
NG >> Replace ICC brake hold relay. Erase DTC and perform ICC system running test. Then perform self-diagnosis of ICC system again.

## 13. CHECK ICC UNIT STANDARD VOLTAGE

**With CONSULT-II**

1. Connect connectors of ICC unit and stop lamp switch.
2. Active test (STOP LAMP: STP LMP DRIVE ON) with CONSULT-II, check voltage between ICC unit harness connector M89 terminal 47 (W/R) and ground.

| | |
|---|---|
| **47 - Ground** | **Approx. 12V (during active test)** |

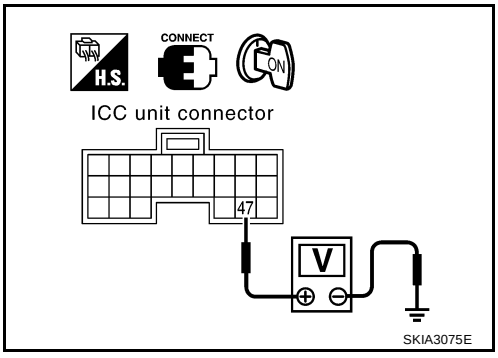


OK or NG

OK >> GO TO 14.
NG >> Replace ICC unit. Erase DTC and perform ICC system running test. Then perform self-diagnosis of ICC system again.

## 14. CHECK ICC BRAKE HOLD RELAY POWER SUPPLY CIRCUIT

1. Check voltage between ICC brake hold relay harness connector E14 terminal 6 (GY) and ground.

| | |
|---|---|
| **6 - Ground** | **Approx. 12V** |

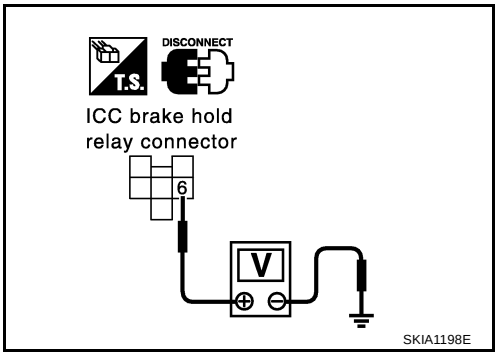


OK or NG

OK >> GO TO 15.
NG >>
- Malfunctions of fuse or ICC brake hold relay power supply harness.
- After repair, erase DTC and perform ICC system running test. Then, perform self-diagnosis of ICC system again.

## 15. CHECK HARNESS BETWEEN ICC BRAKE HOLD RELAY AND ICC UNIT

1. Turn ignition switch OFF.
2. Disconnect connectors of ICC brake hold relay and ICC unit.
3. Check continuity between ICC brake hold relay harness connector E14 terminal 7 (P) and ICC unit harness connector M89 terminal 38 (P/G).

| | |
|---|---|
| **7 - 38** | **Continuity should exist.** |

4. Check continuity between ICC unit harness connector M89 terminal 38 (P/G) and ground.

| | |
|---|---|
| **38 - Ground** | **Continuity should not exist.** |

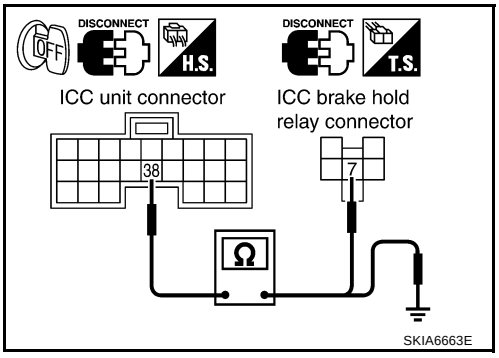


OK or NG

OK >> GO TO 16.
NG >> ● Repair harness between ICC brake hold relay and ICC unit.
● After repair, erase DTC and perform ICC system running test. Then, perform self-diagnosis of ICC system again.

## 16. CHECK ICC BRAKE HOLD RELAY

**With CONSULT-II**

1. Connect connectors of ICC unit and ICC brake hold relay.
2. Disconnect stop lamp switch connector.
3. Perform active test (STOP LAMP) with CONSULT-II, and make sure that stop lamp is illuminated.

OK or NG

OK >> GO TO 17.
NG >> Replace ICC brake hold relay. Erase DTC and perform ICC system running test. Then perform self-diagnosis of ICC system again.

## 17. CHECK ICC UNIT STANDARD VOLTAGE

**With CONSULT-II**

1. Connect stop lamp switch connector.
2. Perform active test (STOP LAMP: STP LMP DRIVE ON) with CONSULT-II, check voltage between ICC unit harness connector M89 terminal 29 (SB) and ground.

| | |
|---|---|
| **29 - Ground** | **Approx. 0V (during active test)** |

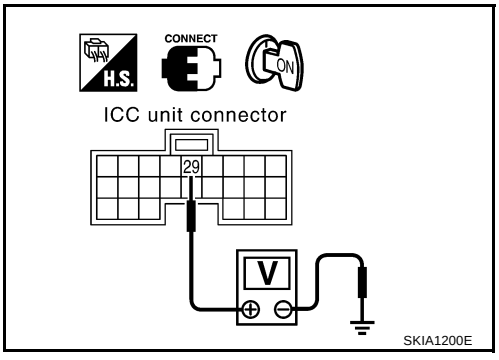


OK or NG

OK >> Replace ICC unit. Erase DTC and perform ICC system running test. Then perform self-diagnosis of ICC system again.
NG >> Replace stop lamp switch.Erase DTC and perform ICC system running test. Then perform self-diagnosis of ICC system again.

# DTC 92 ECM CIRCUIT

AKS006ZF

## 1. DIAGNOSIS CHECK 1

**With CONSULT-II**

● Perform self-diagnosis with CONSULT-II. Is “CAN COMM CIRCUIT” indicated?

YES or NO

YES >> Repair or replace applicable item. Erase DTC and perform ICC system running test. Then perform self-diagnosis of ICC system again.
NO >> GO TO 2.

## 2. DIAGNOSIS CHECK 2

**With CONSULT-II**

- Perform ECM self-diagnosis with CONSULT-II. Is malfunction indicated?

YES or NO

YES >> Repair or replace applicable item. Erase DTC and perform ICC system running test. Then perform self-diagnosis of ICC system again.

NO >> Replace ICC unit. Erase DTC and perform ICC system running test. Then perform self-diagnosis of ICC system again.

# DTC 96 NP RANGE

AKS007HD

## 1. CHECK CONNECTOR ICC UNIT

1. Turn ignition switch OFF.
2. Disconnect connector of ICC unit, and connect them securely again. Then erase DTC. After that, perform self-diagnosis of ICC system again.

OK or NG

OK >>
- Poor connector connection.
- Check connector. (Check connector housing for disconnected, loose, bent, and collapsed terminals. If any malfunction is detected, repair applicable part.) After repair, erase DTC, and perform ICC system running test. Then perform self-diagnosis of ICC system again.

NG >> GO TO 2.

## 2. CHECK NP RANGE SWITCH SIGNAL

**With CONSULT-II**

- With data monitor, check that “NP RANGE SW” operate normally.Refer to ACS-32, "DATA MONITOR" .

OK or NG

OK >> GO TO 4.

NG >> GO TO 3.

## 3. CHECK HARNESS BETWEEN ICC UNIT AND TCM

1. Turn ignition switch OFF.
2. Disconnect ICC unit harness connector and A/T assembly harness connector.
3. Check continuity between ICC unit harness connector M88 terminal 7 (GY/R) and A/T assembly harness connector F44 terminal 9 (GY).

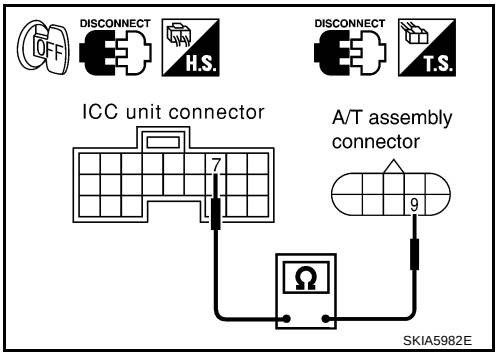


**7 - 9** **Continuity should exist.**

OK or NG

OK >> Replace ICC unit. Erase DTC and perform ICC system running test. Then perform self-diagnosis of ICC system again.

NG >>
- Repair harness between ICC unit and TCM.
- After repair, erase DTC and perform ICC system running test. Then, perform self-diagnosis of ICC system again.

### 4. CHECK SHIFT POSITION SIGNAL

**With CONSULT-II**

- With TCM diagnosis, check that shift operates normally. Refer to AT-114, "DTC P0705 PARK/NEUTRAL POSITION SWITCH" .

OK or NG

OK >> ● Check harness between park/neutral position switch and smart entrance control unit.
● After repair, erase DTC and perform ICC system running test. Then, perform self-diagnosis of ICC system again.

NG >> ● Perform TCM diagnosis.
● After repair, erase DTC and perform ICC system running test. Then, perform self-diagnosis of ICC system again.

## DTC 97 AT CIRCUIT

AKS007IC

### 1. CHECK AT CIRCUIT

**With CONSULT-II**

- With TCM diagnosis, check that shift operates normally. Refer to AT-114, "DTC P0705 PARK/NEUTRAL POSITION SWITCH" .

OK or NG

OK >> Replace ICC unit. erase DTC and perform self-diagnosis of ICC system again.
NG >> ● Perform TCM diagnosis.
● After repair, erase DTC and perform self-diagnosis of ICC system again.

## DTC 98 GEAR POSITION

AKS007ID

### 1. DIAGNOSTIC CHECK

**With CONSULT-II**

- Is “DTC 43 ABS/TCS/VDC CIRC” or “DTC 41 VHCL SPEED SE CIRC” indicated in self-diagnosis display item?

YES or NO

YES >> Repair or replace applicable item. Erase DTC and perform self-diagnosis of ICC system again.
NO >> GO TO 2.

### 2. CHECK VEHICLE SPEED SIGNAL

**With CONSULT-II**

- With data monitor, check that “VHCL SPEED SE” is normal.

OK or NG

OK >> GO TO 3.
NG >> Replace ICC unit. Erase DTC and perform self-diagnosis of ICC system again.

### 3. CHECK SHIFT GEAR POSITION

- Check that gear positions are correct in A/T.

OK or NG

OK >> GO TO 5.
NG >> GO TO 4.

## 4. CHECK TCM GEAR POSITION SIGNAL

**With CONSULT-II**

- With TCM data monitor with CONSULT-II, check that gear positions are correct.

OK or NG

OK >> Replace ICC unit. Erase DTC and perform self-diagnosis of ICC system again.
NG >>
- Perform TCM diagnosis.
- After repair, erase DTC and perform self-diagnosis of ICC system again.

## 5. CHECK TCM TURBINE ROTATION

**With CONSULT-II**

- With TCM diagnosis, check that turbine rpm is normal. Refer to AT-141, "DTC P1716 TURBINE REVOLUTION SENSOR" .

OK or NG

OK >> Replace ICC unit. Erase DTC and perform self-diagnosis of ICC system again.
NG >>
- Perform TCM diagnosis.
- After repair, erase DTC and perform self-diagnosis of ICC system again.

# DTC 102 RADAR STAIN

AKS006ZI

## 1. VISUAL INSPECTION (1)

- Check that there is no contamination and foreign material on ICC sensor body window.

OK or NG

OK >> GO TO 2.
NG >>
- If any, remove them.
- After that, erase DTC and perform ICC system running test. Then perform self-diagnosis of ICC system again.

## 2. VISUAL INSPECTION (2)

- Check ICC sensor body window for cracks.

OK or NG

OK >> GO TO 3.
NG >>
- Replace ICC sensor, and adjust laser beam.
- After that, erase DTC and perform ICC system running test. Then perform self-diagnosis of ICC system again.

## 3. ASKING COMPLAINTS

1. Is there any trace of contamination or foreign material on ICC sensor?
2. Is there any possibility that vehicle was driven in snow or ICC sensor was frosted?
3. Is there any possibility that ICC sensor was fogged temporarily? (Front window glass may have also tended to be fogged.)

Yes or No

Yes >> Explain difference in displays between contamination detection result and current indication to customer, and tell them “This is not malfunction”.
No >>
- Replace ICC sensor, and adjust laser beam aiming.
- After that, erase DTC and perform ICC system running test. Then perform self-diagnosis of ICC system again.

## DTC 103 LASER SENSOR FAIL

AKS006ZJ

### 1. DIAGNOSTIC CHECK

- Are “DTC 11 CONTROL UNIT” or “DTC 20 CAN COMM CIRCUIT” item indicated in self-diagnosis display item?

YES or NO

YES >> GO TO APPLICABLE ITEM INSPECTION. Refer to ACS-41, "DTC 11 CONTROL UNIT" , and ACS-41, "DTC 20 CAN COMM CIRCUIT" .

NO >>
- Replace ICC sensor, and adjust laser beam aiming.
- After that, erase DTC and perform ICC system running test. Then perform self-diagnosis of ICC system again.

## DTC 104 LASER AIMING INCMP

AKS006ZK

### 1. DIAGNOSTIC CHECK

1. Adjust laser beam aiming. Erase DTC and perform ICC system running test.
2. After that, perform self-diagnosis of ICC system. Is “DTC 104 LASER AIMING INCMP” indicated?

YES or NO

YES >>
- Replace ICC sensor, and adjust laser beam aiming.
- After that, erase DTC and perform ICC system running test. Then perform self-diagnosis of ICC system again.

NO >> INSPECTION END

## DTC 107 LASER COMM FAIL

AKS006ZL

### 1. DIAGNOSTIC CHECK

- Is “DTC 11 CONTROL UNIT” or “DTC 20 CAN COMM CIRCUIT” items other than “DTC 107 LASER COMM FAIL” indicated in the self-diagnosis display item?

YES or NO

YES >> GO TO APPLICABLE ITEM INSPECTION. Refer to ACS-41, "DTC 11 CONTROL UNIT" , and ACS-41, "DTC 20 CAN COMM CIRCUIT" .

NO >>
- Replace ICC sensor. Adjust laser beam aiming.
- After that, erase DTC and perform ICC system running test. Then perform self-diagnosis of ICC system again.

## DTC 109 LASER HIGH TEMP

AKS006ZM

### 1. CHECK SYMPTOM

- Is cooling system malfunctioning?

YES or NO

YES >>
- Repair cooling system.
- After that, erase DTC and perform ICC system running test. Then perform self-diagnosis of ICC system again.

NO >>
- Replace ICC sensor, and adjust laser beam aiming.
- After repair, erase DTC. Then perform ICC system running test, and perform self-diagnosis of ICC unit.

# TROUBLE DIAGNOSIS FOR SYMPTOMS

PFP:00007

## Symptom Chart

AKS006ZN

| Symptoms | | Reference page |
|---|---|---|
| Operation | ON/OFF switch does not switch ON. | Symptom 1<br>ACS-60 |
| | ON/OFF switch does not switch OFF. | Symptom 1<br>ACS-60 |
| | Cruise does not function for setting (powering functions). | Symptom 2<br>ACS-60 |
| | CANCEL switch does not function. | Symptom 3<br>ACS-61 |
| | Resume does not function. | Symptom 3<br>ACS-61 |
| | The set speed does not increase. | Symptom 3<br>ACS-61 |
| | The set distance to the vehicle ahead cannot be changed. | Symptom 3<br>ACS-61 |
| | The ICC is not cancelled when the gear is in other than D. | Symptom 4<br>ACS-62 |
| Display/Chime | The ICC system display does not appear. | Check combination meter.<br>Refer to DI-14, "How to Proceed With Trouble Diagnosis" |
| | Chime does not function. | Symptom 5<br>ACS-62 |
| Control | Driving force is hunting. | Symptom 6<br>ACS-63 |
| Function to detect the vehicle ahead | The system frequently cannot detect the vehicle ahead. | Symptom 7<br>ACS-63 |
| | The distance to detect the vehicle ahead is short. | Symptom 7<br>ACS-63 |
| | The system misidentifies a vehicle even though there is no vehicle ahead. | ● Refer to ACS-12, "LASER BEAM AIMING ADJUSTMENT"<br>● Refer to ACS-9, "ICC System Running Test" |
| | The system misidentifies a vehicle in the next lane. | ● Refer to ACS-12, "LASER BEAM AIMING ADJUSTMENT"<br>● Refer to ACS-9, "ICC System Running Test" |
| | The system does not detect a vehicle at all. | Symptom 8<br>ACS-63 |

## Symptom 1: ON/OFF Switch Does Not Switch ON*1 . ON/OFF Switch Does Not Switch OFF*2 .

AKS006ZO

**NOTE:**
- *1:The ICC system display in the combination meter does not illuminate.
- *2:The ICC system display in the combination meter remains powered.

### 1. CHECK ON/OFF SWITCH

**With CONSULT-II**
- With data monitor, check that ON/OFF switch operates normally.

OK or NG

OK >> GO TO 2.
NG >> GO TO 3.

### 2. CHECK CONNECTOR ICC UNIT

1. Turn ignition switch OFF.
2. Disconnect ICC unit connector.
3. Check connector housing for disconnected, loose, bent, and collapsed terminals.

OK or NG

OK >> GO TO 3.
NG >>
- Poor connector connection.
- Repair ICC unit connector. After repair, erase DTC and perform ICC system running test. Then perform self-diagnosis of ICC system again.

### 3. DIAGNOSIS CHECK

**With CONSULT-II**
- Perform self-diagnosis with CONSULT-II.Is“CAN COMM CIRCUIT”indicated?

YES or NO

YES >> Refer toACS-41, "DTC 20 CAN COMM CIRCUIT"
NO >> Refer toACS-45, "DTC 46 OPERATION SW CIRC"

## Symptom 2: The ICC System Cannot Be Set (ON/OFF Switch Turns On/Off).

AKS006ZP

The ICC cannot be set in the following cases.
- When the vehicle speed is not in range of approx. 25 MPH (40 km/h) to 90 MPH (144 km/h).
- When the A/T selector lever is in gears other than ‘D’.
- While the brake is in operation.

### 1. CHECK OF CAUSE OF AUTOMATIC CANCELLATION

**With CONSULT-II**

1. With “CAUSE OF AUTO-CANCEL” in work support, check if any cause of cancellation exists.

OK or NG

OK >>
- Cancel with appropriate cause.
- For causes A, B, or C, go to specified diagnosis.
  A:“OPE SW VOLT CIRC” : Refer to ACS-45, "DTC 46 OPERATION SW CIRC" .
  B:“ VHCL SPD UNMATCH” : Refer to ACS-42, "DTC 41 VHCL SPEED SE CIRC" .
  C:“IGN LOW VOLT” : Refer to ACS-42, "DTC 31 POWER SUPPLY CIR, DTC 34 POWER SUPPLY CIR 2" .

NG >> GO TO 2.

## 2. PERFORM SELF-DIAGNOSIS

**With CONSULT-II**

1. Perform CONSULT-II self-diagnosis to check for malfunctioning items.

OK or NG

OK >> GO TO 3.
NG >> After repairing or replacing malfunctioning part, erase DTC. Perform ICC system running test, and then perform self-diagnosis of ICC system again.

## 3. CHECK SWITCHES AND VEHICLE SPEED SIGNAL

**With CONSULT-II**

1. With data monitor, check that switches and vehicle speed signal operate normally. Refer to ACS-32, "DATA MONITOR" .
   A: VHCL SPEED SE B: D RANGE SW
   C: BRAKE SW D: SET/COAST SW

OK or NG

OK >> After replacing ICC unit, erase DTC. Perform ICC system running test, and then perform self-diagnosis of ICC system again.
NG >>
- A: Refer to ACS-42, "DTC 41 VHCL SPEED SE CIRC" .
- B: Refer to ACS-62, "Symptom 4: The ICC System Is Not Cancelled When the Gear Is in Other Than 'D'." .
- C: Refer to ACS-43, "DTC 45 BRAKE SW/STOP L SW" .
- D: Refer to ACS-45, "DTC 46 OPERATION SW CIRC" .

# Symptom 3: The ICC System Cannot Be Operated by the CANCEL Switch, ACCEL/RES Switch, or DISTANCE Switch.

AKS006ZQ

RESUME does not function in the following cases:

- When ON/OFF switch is turned off once.
- When the vehicle speed is less than 25 MPH (40 km/h).

## 1. CHECK SWITCH

**With CONSULT-II**

1. With data monitor, check that switches operate normally.
   "RESUME/ACC SW", "CANCEL SW", "DISTANCE ADJ".Refer to ACS-32, "DATA MONITOR" .

OK or NG

OK >> After replacing ICC unit, erase DTC. Perform ICC system running test, and then perform self-diagnosis of ICC system again.
NG >> GO TO 2.

## 2. CHECK DIAGNOSIS

**With CONSULT-II**

- Perform self-diagnosis with CONSULT-II. Is "CAN COMM CIRCUIT" indicated?

YES or NO

YES >> Refer to ACS-41, "DTC 20 CAN COMM CIRCUIT" .
NO >> Refer to ACS-45, "DTC 46 OPERATION SW CIRC" .

## Symptom 4: The ICC System Is Not Cancelled When the Gear Is in Other Than 'D'.

AKS006ZR

### 1. CHECK D RANGE SWITCH

**With CONSULT-II**

1. With data monitor, check that "D RANGE SW" operates normally.Refer to ACS-32, "DATA MONITOR" .

OK or NG

OK >> After replacing ICC unit, erase DTC. Perform ICC system running test, and then perform self-diagnosis of ICC system again.
NG >> GO TO 2.

### 2. CHECK CAN COMMUNICATION

**With CONSULT-II**

1. With CONSULT-II self-diagnosis, check that "CAN COMM CIRCUIT" item exists.

OK or NG

OK >> GO TO 3.
NG >> Refer to ACS-41, "DTC 20 CAN COMM CIRCUIT" .

### 3. CHECK D RANGE SWITCH

1. With TCM data monitor, check that "D" position switch operates normally.

OK or NG

OK >> After replacing ICC unit. Perform ICC system running test, and then perform self-diagnosis of ICC system again.
NG >> After repairing or replacing malfunctioning part. Perform ICC system running test, and then perform self-diagnosis of ICC system again.

## Symptom 5: Chime Does Not Sound.

AKS006ZS

The chime may not sound occasionally in the following cases even if the distance from the vehicle ahead is short:

- When the speed difference from that of the vehicle ahead is small (both vehicles driving at similar speed).
- When the vehicle ahead drives at faster speed (the actual distance is increasing).
- When depressing the accelerator.
- Chime does not sound when the vehicle is not driving.
- Chime does not sound when the system does not detect any vehicle ahead. (Diagnose the conditions under which the system is detecting the vehicle ahead and when the system is malfunctioning. If there is any malfunction in detecting the vehicle ahead, check the system following the ACS-63, "Symptom 7: The ICC System Frequently Cannot Detect the Vehicle Ahead/The Detection Zone Is Short." .

### 1. CHECK ICC WARNING CHIME

**With CONSULT-II**

1. With active test, check that ICC warning chime operates normally.

OK or NG

OK >> Determine preceding vehicle detection status when malfunction occurred. If chime should have sounded: after replacing ICC unit. Perform ICC system running test, and then perform self-diagnosis of ICC system again.
NG >> GO TO 2.

## 2. CAN COMMUNICATION INSPECTION

**With CONSULT-II**

1. With CONSULT-II self-diagnosis, check that “CAN COMM CIRCUIT” item exists.

OK or NG

OK >> Refer to ACS-41, "DTC 20 CAN COMM CIRCUIT" .
NG >> After replacing combination meter, erase DTC. Perform ICC system running test, and then perform self-diagnosis of ICC system again.

# Symptom 6: Driving Force Is Hunting.

AKS006ZU

## 1. CHECK ECM

1. Perform self-diagnosis of ECM.

OK or NG

OK >> Refer toACS-63, "Symptom 7: The ICC System Frequently Cannot Detect the Vehicle Ahead/The Detection Zone Is Short." .
NG >> After repairing applicable parts, erase DTC. Perform ICC system running test, and then perform self-diagnosis of ICC system again.

# Symptom 7: The ICC System Frequently Cannot Detect the Vehicle Ahead/The Detection Zone Is Short.

AKS006ZV

The detection function may become unstable in the following cases:

- When the reflector of the vehicle ahead is deficient/ not clean enough to reflect the radar.
- When driving a road with extremely sharp corners.
- When the radar cannot detect the reflector of the vehicle ahead as the vehicle ahead is passing a hill or passing the peak.

## 1. VISUAL CHECK

1. Check ICC sensor body window for contamination and foreign materials.

OK or NG

OK >> If any contamination or foreign materials are found, remove them. Then perform ICC system running test.
NG >> GO TO 2.

## 2. CHECK FUNCTION

1. After adjusting ICC sensor beam aiming, perform ICC system running test. Check that preceding vehicle detection performance has been improved.

OK or NG

OK >> INSPECTION END
NG >>
- Replace ICC sensor, and perform laser beam aiming adjustment.
- After performing above. Perform ICC system running test, and then perform self-diagnosis of ICC system again.

# Symptom 8: The System Does Not Detect the Vehicle Ahead at All.

AKS006ZW

## 1. VISUAL CHECK

1. With ignition switch turned ON (engine not started), check that all indicator lamps in ICC system display are continuously lit. (Check for a missing segment in preceding vehicle detection display.)

OK or NG

OK >> GO TO 2.
NG >> Check for combination meter. Refer to DI-14, "How to Proceed With Trouble Diagnosis" in DI.

## 2. VISUAL CHECK

- Check ICC sensor body window for contamination and foreign materials.

OK or NG

OK >> If any contamination or foreign materials are found, remove them. Perform ICC system running test.
NG >> GO TO 3.

## 3. VISUAL CHECK

- Check ICC sensor body window for cracks and scratches.

OK or NG

OK >> GO TO 4.
NG >>
- Replace ICC sensor, and perform laser beam aiming adjustment.
- After performing above. Perform ICC system running test, and then perform self-diagnosis of ICC system again.

## 4. ADJUST ICC SENSOR

1. After adjusting ICC sensor beam aiming, perform ICC system running test. Check that preceding vehicle detection performance has been improved.

OK or NG

OK >> INSPECTION END
NG >>
- Replace ICC sensor, and perform laser beam aiming adjustment.
- After performing above. Perform ICC system running test, and then perform self-diagnosis of ICC system again.

# ELECTRICAL COMPONENT INSPECTION

PFP:00000

## ICC Steering Switch

AKS006ZX

1. Disconnect ICC steering switch.
2. Check resistance between M203 terminals 14 and 15 by depressing each switch.

| Switch | Condition | Resistance [Ω] |
|---|---|---|
| ON/OFF | Depressed | Approx. 0 |
| | Released | Approx. 5,456 |
| DISTANCE | Depressed | Approx. 741 |
| | Released | Approx. 5,456 |
| ACCEL/RES | Depressed | Approx. 2,586 |
| | Released | Approx. 5,456 |
| COAST/SET | Depressed | Approx. 1,406 |
| | Released | Approx. 5,456 |
| CANCEL | Depressed | Approx. 309 |
| | Released | Approx. 5,456 |

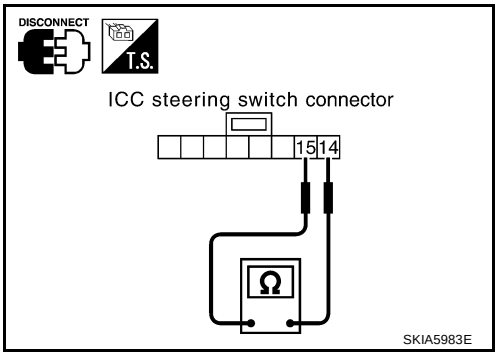


## ICC Brake Switch and Stop Lamp Switch

AKS006ZY

| | Continuity | |
|---|---|---|
| | ICC brake switch | Stop lamp switch |
| When brake pedal is depressed | No | Yes |
| When brake pedal is released | Yes | No |

**Check each switch after adjusting brake pedal, refer to BR-6, "BRAKE PEDAL" .**

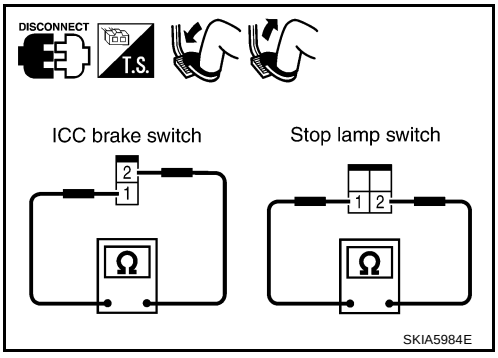


## Booster Solenoid

AKS006ZZ

Disconnect booster solenoid/release switch connector, and check resistance value between terminals 4 and 6.

**4 - 6 :Approx. 1.4Ω**

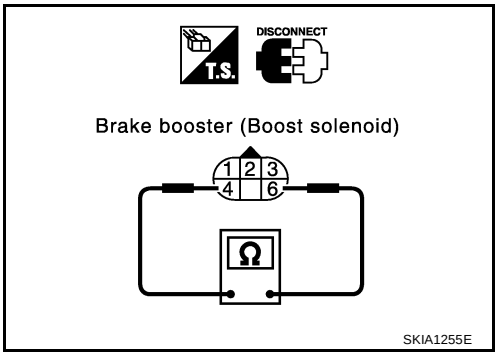

## Release Switch

AKS00700

Disconnect booster solenoid/release switch connector and check resistance between the terminals.

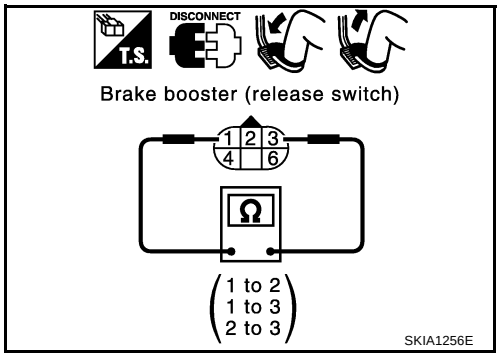


| Condition | 1 - 3 | 1 - 2 | 2 - 3 |
|---|---|---|---|
| Release the brake pedal. | Continuity should exist. | Continuity should not exist. | Continuity should not exist. |
| Depress the brake pedal. | Continuity should not exist. (Note) | Continuity should exist. (Note) | Continuity should not exist. |

**NOTE:**

If pedal is depressed insufficiently, resistance value may remain unchanged.

# REMOVAL AND INSTALLATION

PFP:00000

## ICC Unit

AKS00704

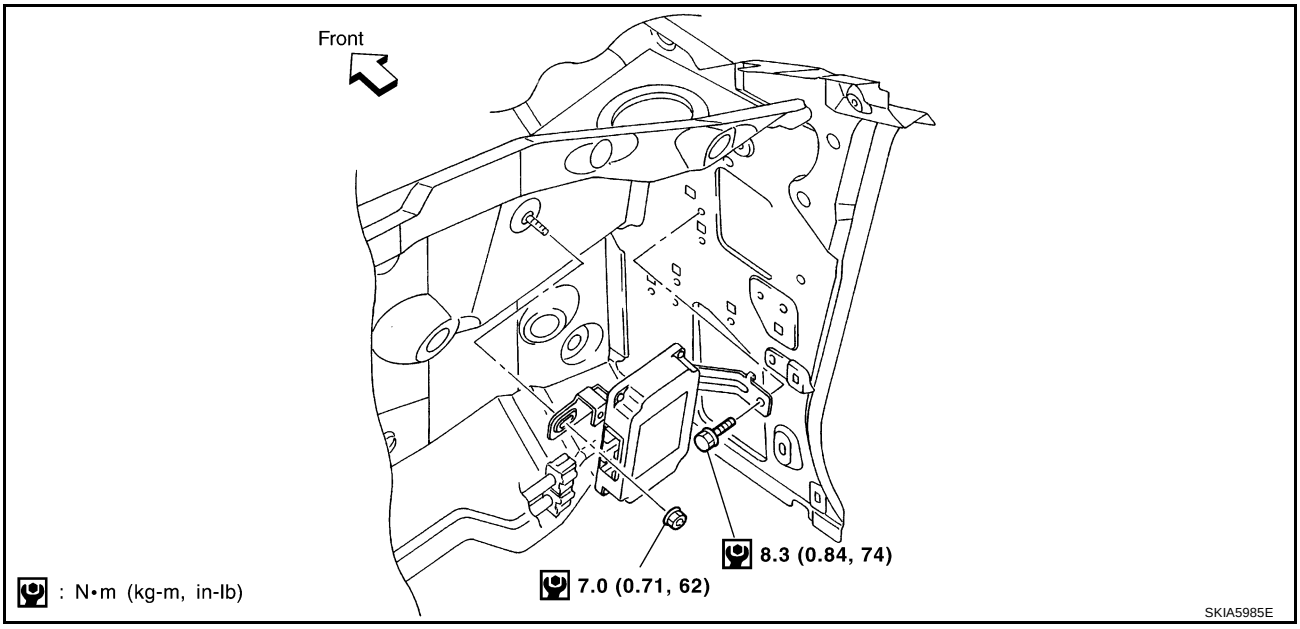


## ICC Sensor

AKS00705

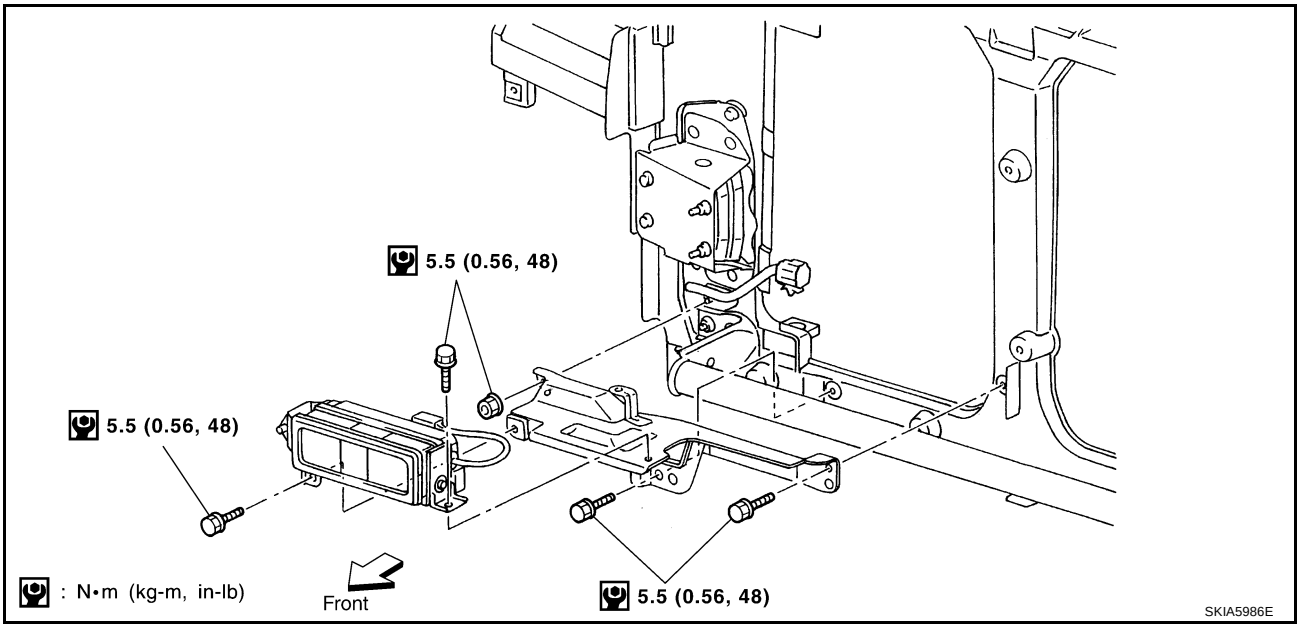


**CAUTION:**

**Adjust the laser beam aiming every time the ICC sensor is removed or installed.**

## ICC Steering Switch

AKS00707

Replace ICC steering switch as steering wheel assembly. Refer to PS-11, "Removal and Installation" .