SECTION LU

ENGINE LUBRICATION SYSTEM

CONTENTS

PRECAUTIONS

PFP:00001

Precautions for Liquid Gasket

ABS008HR

LIQUID GASKET APPLICATION PROCEDURE

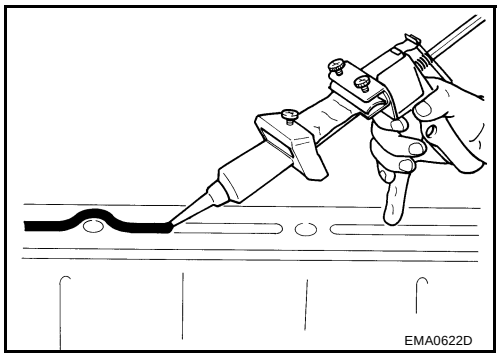

1. Remove the old liquid gasket adhering to the gasket application surface and the mating surface.
2. Wipe the liquid gasket application surface and the mating surface with white gasoline (lighting and heating use) to remove adhering moisture, grease and foreign materials.
3. Attach the liquid gasket tube to the tube presser (special service tool).
   Use Genuine Thread Sealant or equivalent. Refer to **GI-47, "RECOMMENDED CHEMICAL PRODUCTS AND SEALANTS"**.
4. Apply the liquid gasket without breaks to the specified location with the specified dimensions.
   - Within five minutes of gasket application, install the mating component.
   - If the liquid gasket protrudes, wipe it off immediately.
   - Do not retighten after the installation.
   - After 30 minutes or more have passed from the installation, fill the engine oil and engine coolant.

PREPARATION

PFP:00002

Special Service Tools

ABS000Q8

The actual shapes of Kent-Moore tools may differ from those of special service tools illustrated here.

Tool number (Kent-Moore No.) Tool name	Description
ST25051001 (J25695-1) Oil pressure gauge 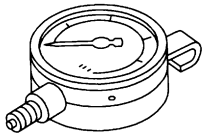 NT050	Measuring oil pressure **Maximum measuring range: 2,452 kPa (25 kg/cm^2 , 356 psi)**
ST25052000 (J25695-2) Hose 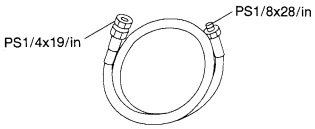 S-NT559	Adapting oil pressure gauge to upper oil pan
KV10115801 (J38956) Oil filter wrench 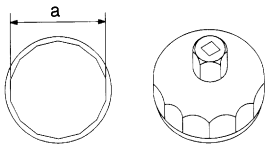 S-NT375	Removing oil filter **a : 64.3 mm (2.531 in)**
WS39930000 (—) Tube presser 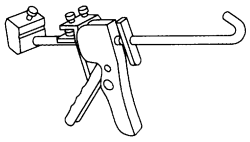 NT052	Pressing the tube of liquid gasket

Commercial Service Tools

ABS000Q9

Tool name	Description
Deep socket 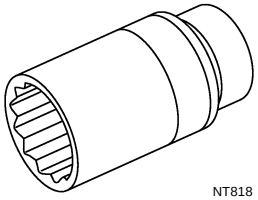 NT818	Removing and installing oil pressure switch Deep socket 24 mm (0.94 in)
Power tool 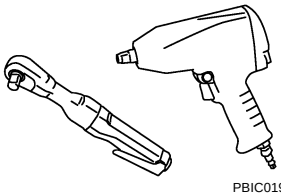 PBIC0190E	Loosening nuts and bolts

LUBRICATION SYSTEM

PFP:15010

Lubrication Circuit

ABS000QA

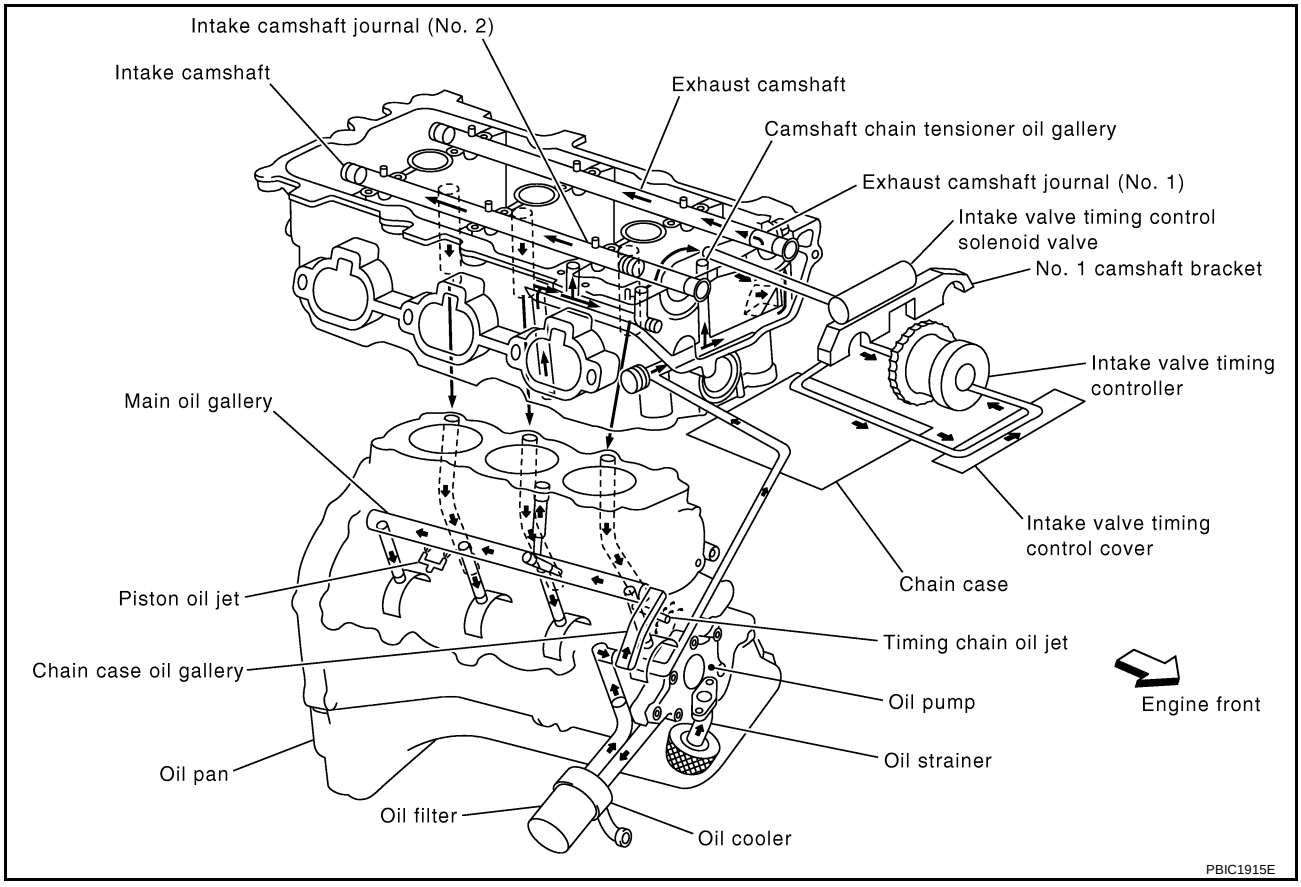

System Drawing

ABS000QB

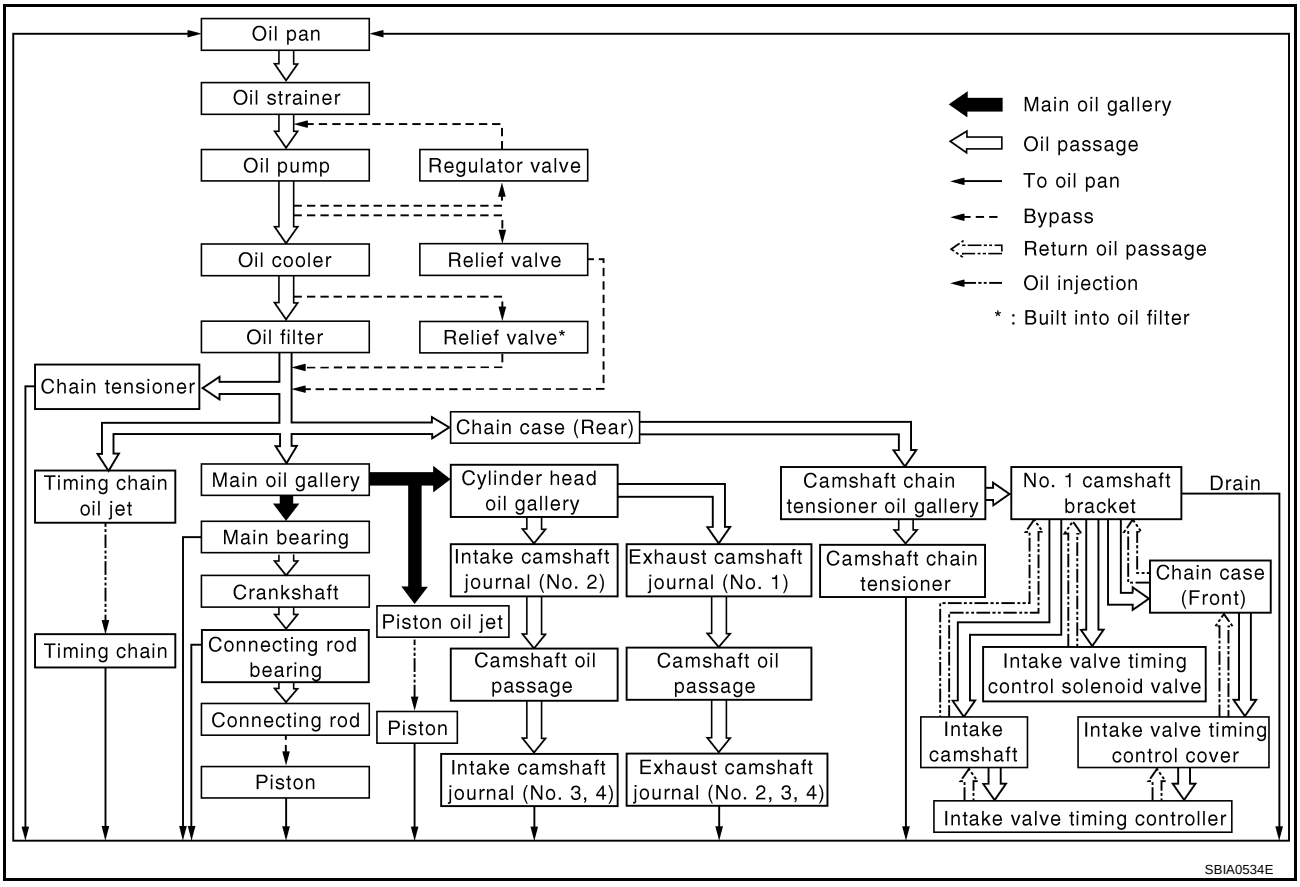

ENGINE OIL

PFP:KLA92

Inspection

ABS000QC

OIL LEVEL

NOTE:

- Before starting engine, put vehicle horizontally and check the oil level. If engine is already started, stop it and allow 10 minutes before checking.
- Check that the oil level is within the range as indicated on the dipstick.
- If it is out of the range, add oil as necessary.

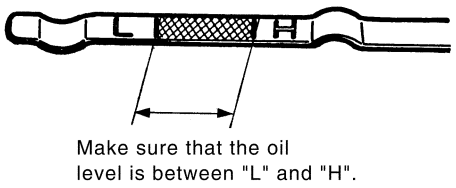

NOTE:

When checking oil level, insert level gauge with its tip aligned with oil level gauge guide on cylinder head. (In the figure, air cleaner case and air duct are removed.)

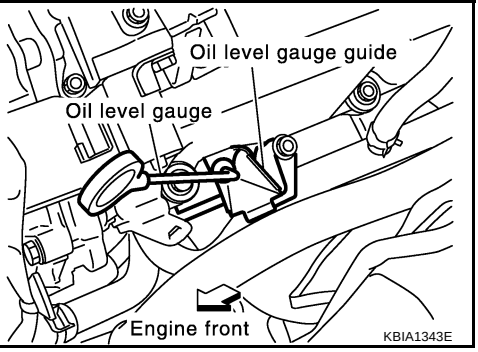

OIL APPEARANCE

- Check the oil for white turbidity or heavy contamination.
- If the oil becomes turbid and white, it is highly probable that it is contaminated with engine coolant.

OIL LEAKAGE

Check for oil leakage around the following areas:

- Oil pan
- Oil pan drain plug
- Oil pressure sensor
- Oil filter
- Oil cooler
- Intake valve timing control cover and intake valve timing control solenoid valve
- Mating surface between cylinder block and cylinder head
- Mating surface between cylinder head and rocker cover
- Mating surface between front timing chain case and rear timing chain case
- Mating surface between rear timing chain case and cylinder block

OIL PRESSURE CHECK

WARNING:

- **Be careful not to burn yourself, as engine oil may be hot.**
- **Put the selector lever in the “N” or Park “P” position.**

1. Check oil level. Refer to LU-6, "Inspection" .
2. Remove undercover with power tool.
3. Disconnect oil pressure sensor harness connector.
4. Remove oil pressure sensor.

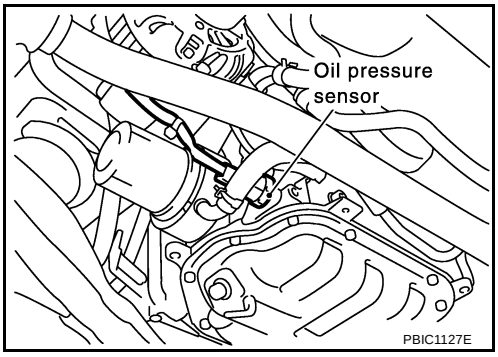

5. Install oil pressure gauge (special service tool) and hose (special service tool).
6. Start engine and warm it up to normal operating temperature.
7. Check oil pressure with engine running under no-load.

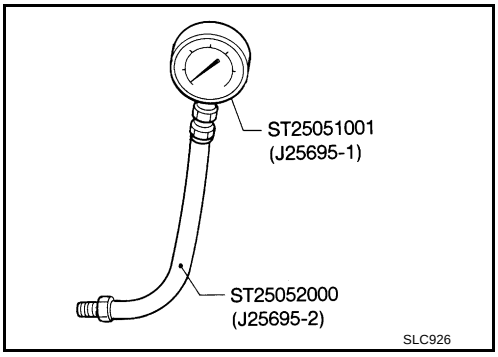

Engine speed rpm	Approximate discharge pressure kPa (kg/cm^2 , psi)
Idle speed	More than 98 (1.0, 14)
2,000	More than 294 (3.0, 43)
6,000	More than 392 (4.0, 57)

If difference is extreme, check oil passage and oil pump for oil leaks.

8. After the inspections, install oil pressure sensor as follows:

a. Remove the old liquid gasket adhering to sensor and engine.

b. Apply thread sealant and tighten oil pressure sensor to specification.
Use Genuine Thread Sealant or equivalent. Refer to GI-47, "RECOMMENDED CHEMICAL PRODUCTS AND SEALANTS" .

: 12.3 - 17.2 N·m (1.25 - 1.75 kg-m, 9 - 12 ft-lb)

Changing Engine Oil

ABS000QD

WARNING:

- **Be careful not to burn yourself, as the engine oil may be hot.**
- **Prolonged and repeated contact with used engine oil may cause skin cancer; try to avoid direct skin contact with used engine oil. If skin contact is made, wash thoroughly with soap or hand cleaner as soon as possible.**

1. Warm up engine, put vehicle horizontally and check for engine oil leakage from engine components.
2. Stop engine and wait for 10 minutes.
3. Remove drain plug and oil filler cap.
4. Drain engine oil.
5. Install drain plug.

   CAUTION:

   - **Be sure to clean drain plug and install with new washer.**

   Oil pan drain plug:

   : 29.4 - 39.2 N·m (3.0 - 4.0 kg-m, 22 - 28 ft-lb)

6. Refill with new engine oil.
   Oil specification and viscosity:
   Refer to MA-11, "RECOMMENDED FLUIDS AND LUBRICANTS" .
   Oil capacity (Approximate):

Unit: ℓ (US qt, Imp qt)

Drain and refill	With oil filter change	4.7 (5, 4-1/8)
	Without oil filter change	4.4 (4-5/8, 3-7/8)
Dry engine (Overhaul)		5.4 (5-3/4, 4-3/4)

   CAUTION:

   - **When filling engine oil, do not pull out oil level gauge.**
   - **The refill capacity depends on the engine oil temperature and drain time. Use these specifications for reference only.**
   - **Always use oil level gauge to determine the proper amount of engine oil in the engine.**

7. Warm up engine and check area around drain plug and oil filter for oil leakage.
8. Stop engine and wait for 10 minutes.
9. Check engine oil level. Refer to LU-6, "Inspection" .

OIL FILTER

PFP:15208

Removal and Installation

ABS000QE

REMOVAL

1. Remove undercover with power tool.
2. Using an oil filter wrench (special service tool), remove oil filter.

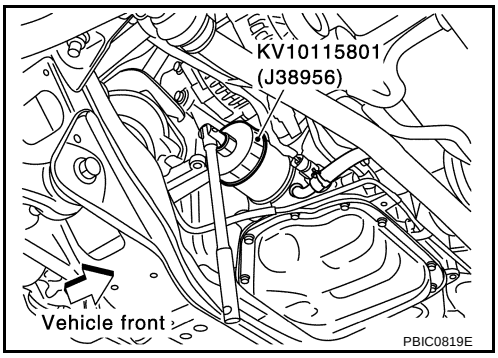

CAUTION:

- **Oil filter is provided with a relief valve. Use genuine NISSAN oil filter or equivalent.**
- **Be careful not to get burned, the engine oil may be hot.**
- **When removing, prepare a shop cloth to absorb any engine oil leakage or spillage.**
- **Do not allow engine oil to adhere to the drive belts.**
- **Completely wipe off any engine oil that adheres to engine and vehicle.**

INSTALLATION

1. Remove foreign materials adhering to the oil filter installation surface.
2. Apply engine oil to the oil seal contact surface of new oil filter.

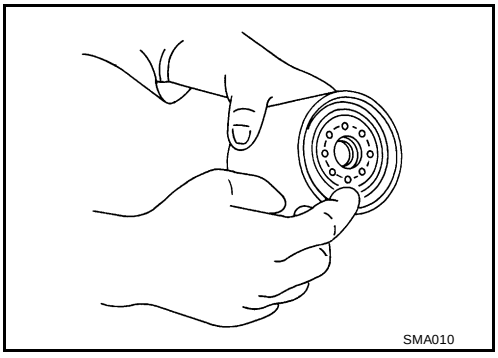

3. Screw oil filter manually until it touches the installation surface, then tighten it by 2/3 turn. Or tighten to specification.

   Oil filter:

   : 14.7 - 20.5 N·m (1.5 - 2.0 kg-m, 11 - 15 ft-lb)

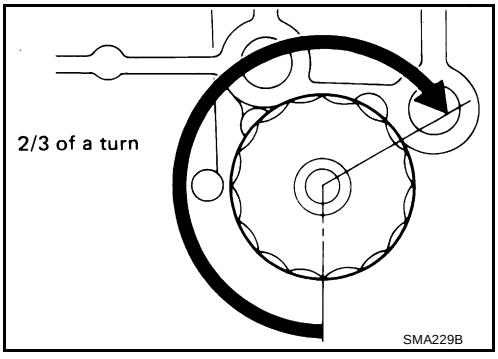

INSPECTION AFTER INSTALLATION

1. Check engine oil level. Refer to LU-6, "ENGINE OIL" .
2. Start engine, and check there is no leak of engine oil.
3. Stop engine, and check engine oil level again. Refer to LU-6, "ENGINE OIL" .

OIL COOLER

PFP:21305

Removal and Installation

ABS009R7

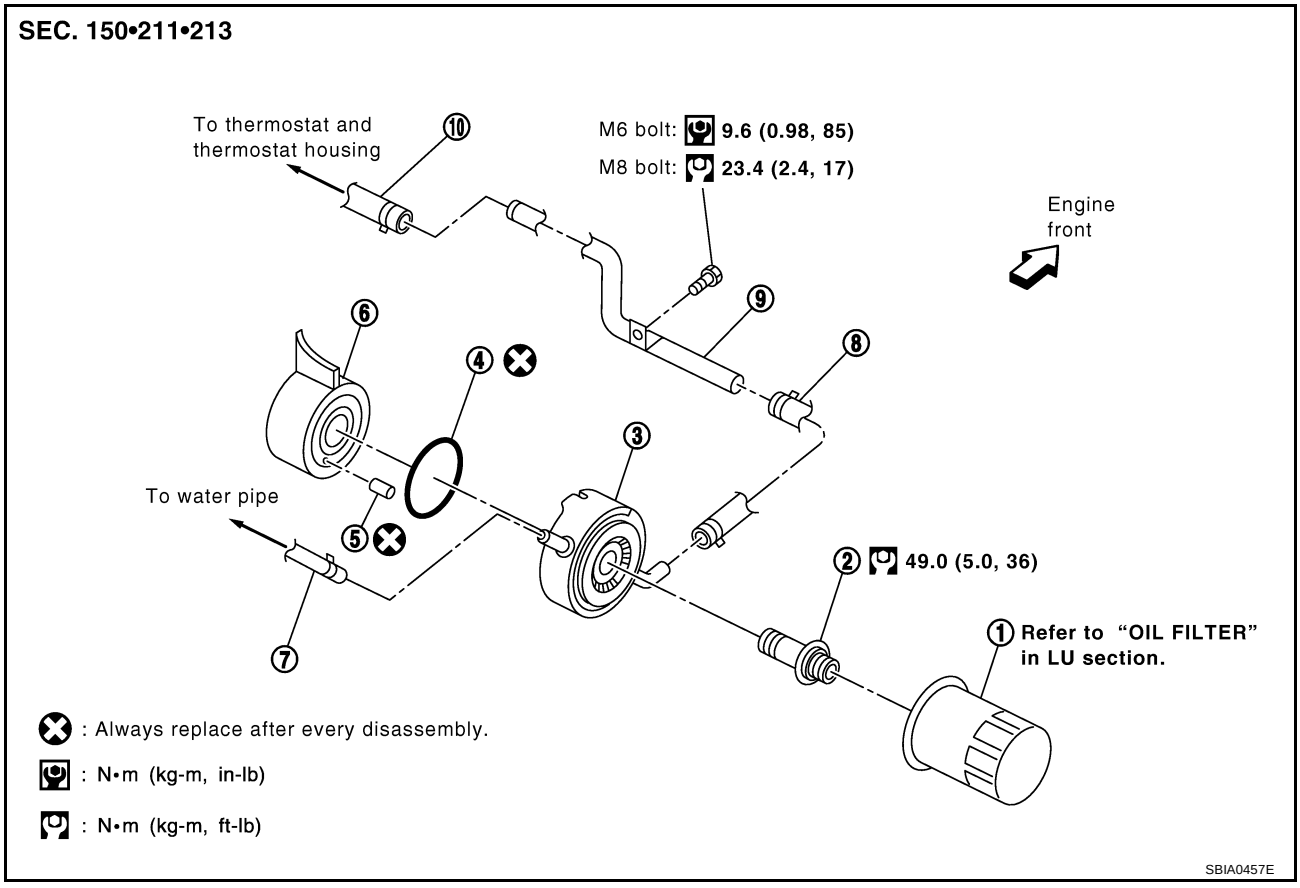

1. Oil filter
2. Connector bolt
3. Oil cooler
4. O-ring
5. Relief valve
6. Oil pan (upper) right side
7. Water hose
8. Water hose
9. Water pipe
10. Water hose

REMOVAL

1. Remove undercover with power tool.
2. Drain engine coolant. Refer to CO-8, "Changing Engine Coolant" .

   CAUTION:
   - **Do not spill engine coolant on the drive belt.**
3. Remove oil filter. Refer to LU-9, "OIL FILTER" .
4. Remove water hoses from oil cooler.
   - Remaining engine coolant in piping will come out. Use a tray to collect it.
5. Remove connector bolt, and remove oil cooler.

INSPECTION AFTER REMOVAL

Oil Cooler

Check oil cooler for cracks. Check oil cooler for clogging by blowing through engine coolant inlet. If necessary, replace oil cooler.

Relief Valve

Inspect relief valve for movement, cracks and breaks by pushing the ball. If replacement is necessary, remove relief valve by prying it out with a suitable tool. Install a new relief valve in place by tapping it.

INSTALLATION

Install in the reverse order of removal paying attention to the following.

- Align cutout on oil cooler with protrusion on oil pan (upper) side, and tighten connector bolt.

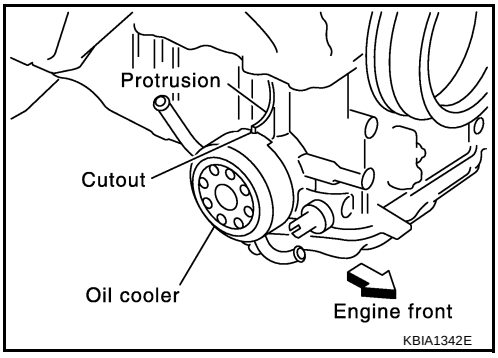

INSPECTION AFTER INSTALLATION

1. Check level of engine oil and engine coolant, and add engine oil and engine coolant. Refer to LU-6, "ENGINE OIL" and CO-8, "ENGINE COOLANT" .
2. Start engine, and check there is no leak of engine oil or engine coolant.
3. Check engine oil level and engine coolant level again. Refer to LU-6, "ENGINE OIL" and CO-8, "ENGINE COOLANT" .

OIL PUMP

PFP:15010

Removal and Installation

ABS000QG

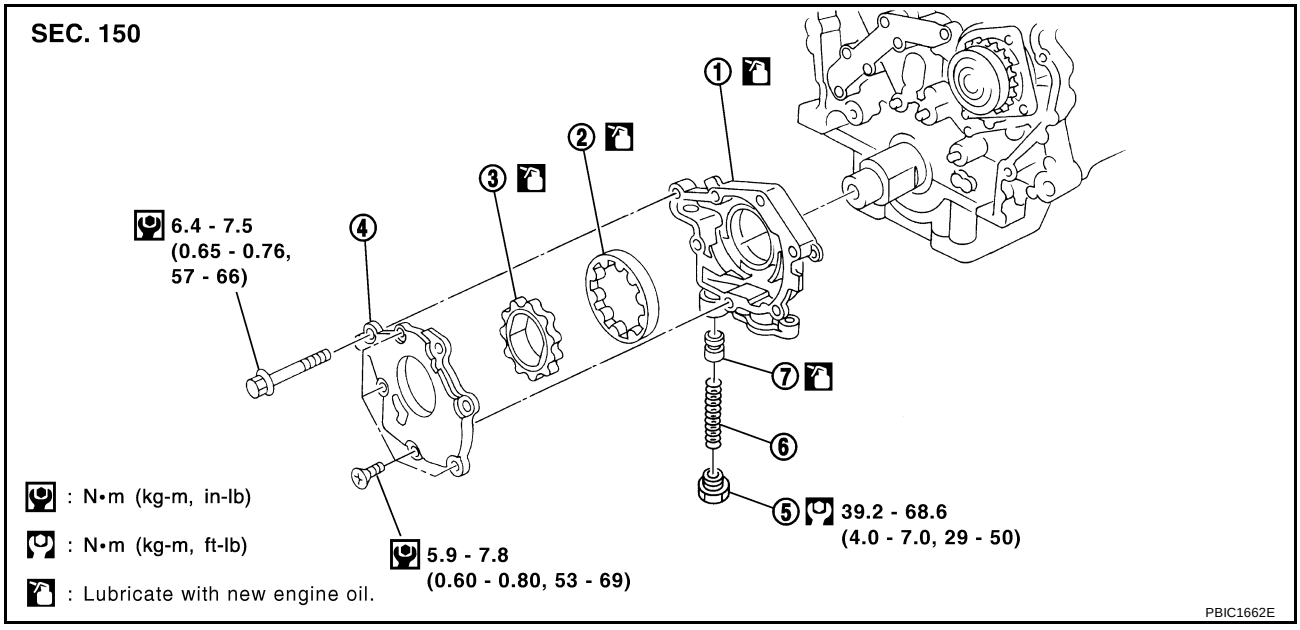

1. Oil pump body
2. Outer rotor
3. Inner rotor
4. Oil pump cover
5. Regulator valve plug
6. Spring
7. Regulator valve

REMOVAL

1. Remove oil pan and oil strainer. Refer to EM-26, "OIL PAN AND OIL STRAINER" .
2. Remove front timing chain case and timing chain (primary). Refer to EM-49, "TIMING CHAIN" .
3. Remove oil pump assembly.

INSTALLATION

Install in the reverse order of removal paying attention to the following:

- When installing, align crankshaft flat faces with inner rotor flat faces.

INSPECTION AFTERT INSTALLATION

1. Start engine and check for engine oil leakage.
2. Check oil level and add engine oil. Refer to LU-6, "ENGINE OIL" .

Disassembly and Assembly

ABS000QH

DISASSEMBLY

1. Remove oil pump cover.
2. Remove inner rotor and outer rotor from oil pump body.
3. After removing regulator plug, remove regulator spring and regulator valve.

INSPECTION AFTER DISASSEMBLY

Clearance of Oil Pump Parts

- Measure the clearance with feeler gauge.
  The clearance between outer rotor and oil pump body (position 1)

  Standard : 0.114 - 0.260 mm (0.0045 - 0.0102 in)

  The tip clearance between inner rotor and outer rotor (position 2)

  Standard : Below 0.180 mm (0.0071in)

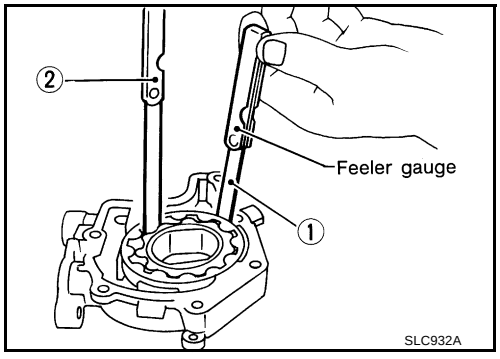

- Measure the clearance with feeler gauge and straightedge.
  The side clearance between inner rotor and oil pump body (position 3)

  Standard : 0.030 - 0.070 mm (0.0012 - 0.0028 in)

  The side clearance between outer rotor and oil pump body (position 4)

  Standard : 0.050 - 0.110 mm (0.0020 - 0.0043 in)

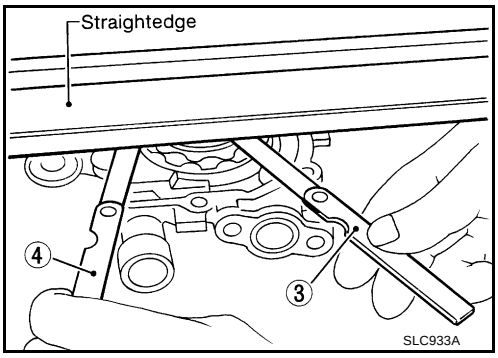

Calculate the clearance between inner rotor and oil pump body as follows.

- Measure the inner diameter of oil pump body with inside micrometer (Position 5)
- Measure the outer diameter of protruded portion of inner rotor (Position 6)
- (Clearance) = (Inner diameter of oil pump body) – (Outer diameter of inner rotor)

  Standard : 0.045 - 0.091 mm (0.0018 - 0.0036 in)

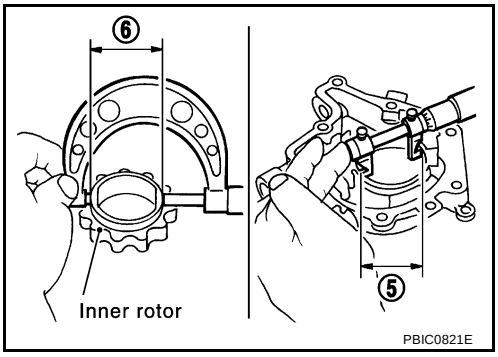

Regulator Valve Clearance

(Clearance) = (Valve hole diameter) – (Outer diameter of valve)

Standard : 0.040 - 0.097 mm (0.0016 - 0.0038 in)

CAUTION:
Coat regulator valve with engine oil.
Check that it falls smoothly into the valve hole by its own weight.

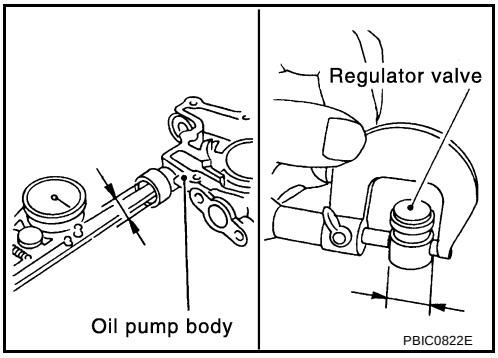

ASSEMBLY

Install in the reverse order of removal paying attention to the following.

- Install inner rotor with the groove faced to the oil pump cover side.

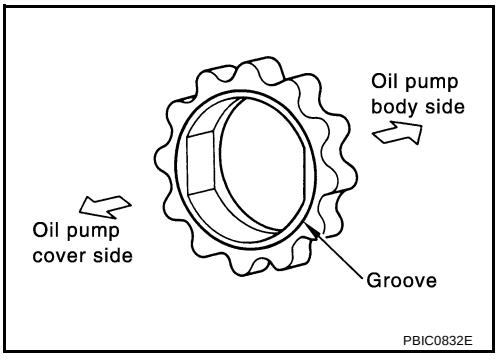

SERVICE DATA AND SPECIFICATIONS (SDS)

PFP:00030

Standard and Limit

ABS000QI

OIL PRESSURE

Engine speed rpm	Approximate discharge pressure kPa (kg/cm^2 , psi)
Idle speed	More than 98 (1.0, 14)
2,000	More than 294 (3.0, 43)
6,000	More than 392 (4.0, 57)

OIL PUMP

Unit: mm (in)

Body to outer rotor radial clearance	0.114 - 0.260 (0.0045 - 0.0102)
Inner rotor to outer rotor tip clearance	Below 0.180 (0.0071)
Body to inner rotor axial clearance	0.030 - 0.070 (0.0012 - 0.0028)
Body to outer rotor axial clearance	0.050 - 0.110 (0.0020 - 0.0043)
Inner rotor to brazed portion of housing clearance	0.045 - 0.091 (0.0018 - 0.0036)

REGULATOR VALVE

Unit: mm (in)

Regulator valve to oil pump cover clearance	0.040 - 0.097 (0.0016 - 0.0038)

OIL CAPACITY (APPROXIMATE)

Unit: ℓ (US qt, Imp qt)

With oil filter change	4.7 (5, 4-1/8)
Without oil filter change	4.4 (4-5/8, 3-7/8)
Dry engine (Overhaul)	5.4 (5-3/4, 4-3/4)

Tightening Torque

ABS000QJ

Unit: N·m (kg-m, ft-lb)
Unit: N·m (kg-m, in-lb)*

Oil pressure sensor	12.3 - 17.2 (1.25 - 1.75, 9 - 12)
Oil pan drain plug	29.4 - 39.2 (3.0 - 4.0, 22 - 28)
Oil cooler connector bolt	49.0 (5.0, 36)
Oil pump body	6.4 - 7.5 (0.65 - 0.76, 57 - 66)*
Oil pump cover	5.9 - 7.8 (0.60 - 0.80, 53 - 69)*
Regulator valve plug	39.2 - 68.6 (4.0 - 7.0, 29 - 50)