SECTION BL

BODY, LOCK & SECURITY SYSTEM

CONTENTS

PRECAUTIONS 4
Precautions for Supplemental Restraint System (SRS) “AIR BAG” and “SEAT BELT PRE-TENSIONER” 4
Precautions for Battery Service 4
Precautions for Work 4
Wiring Diagnosis and Trouble Diagnosis 4
PREPARATION 5
Special Service Tools 5
Commercial Service Tools 5
SQUEAK AND RATTLE TROUBLE DIAGNOSIS 6
Work Flow 6
CUSTOMER INTERVIEW 6
DUPLICATE THE NOISE AND TEST DRIVE 7
CHECK RELATED SERVICE BULLETINS 7
LOCATE THE NOISE AND IDENTIFY THE ROOT CAUSE 7
REPAIR THE CAUSE 7
CONFIRM THE REPAIR 8
Generic Squeak and Rattle Troubleshooting 8
INSTRUMENT PANEL 8
CENTER CONSOLE 8
DOORS 8
TRUNK 9
SUNROOF/HEADLINER 9
SEATS 9
UNDERHOOD 9
Diagnostic Worksheet 10
HOOD 12
Fitting Adjustment 12
FRONT END HEIGHT ADJUSTMENT AND LATERAL/LONGITUDINAL CLEARANCE ADJUSTMENT 12
SURFACE HEIGHT ADJUSTMENT 12
Removal and Installation of Hood Assembly 13
REMOVAL 13
INSTALLATION 13
Removal and Installation of Hood Lock Control 14
REMOVAL 14
INSTALLATION 15
Hood Lock Control Inspection 15
RADIATOR CORE SUPPORT 16
Removal and Installation 16
REMOVAL 16
INSTALLATION 17
POWER DOOR LOCK SYSTEM 18
Component Parts and Harness Connector Location 18
System Description 19
POWER WINDOW SERIAL LINK 20
OUTLINE 20
Schematic 21
Wiring Diagram -D/LOCK- 22
FIG. 1 22
FIG. 2 23
FIG. 3 24
FIG. 4 25
FIG. 5 26
Terminals and Reference Value for BCM 27
Terminal and Reference Value for Power Window Main Switch 27
Work Flow 28
Preliminary Check 28
FUSE CHECK 28
CONSULT-II Function 29
CONSULT-II BASIC OPERATION PROCEDURE 29
DATA MONITOR 30
ACTIVE TEST 30
WORK SUPPORT 30
Trouble Diagnoses Symptom Chart 31
Door Switch Check 32
Key Switch (insert) Check 33
Door Lock and Unlock Switch Check 35
Driver Side Door Lock Actuator Check 38
Passenger Side Door Lock Actuator Check 40
Door Key Cylinder Switch Check 42
Back Door Opener Switch Check 44
Back Door Opener Actuator Check 45

FUEL FILLER LID OPENER 47
Wiring Diagram –F/LID– 47
REMOTE KEYLESS ENTRY SYSTEM 48
Component Parts and Harness Connector Location.. 48
System Description 49
INPUTS 49
OPERATED PROCEDURE 49
CAN Communication System Description 51
TYPE 1 51
TYPE 2/TYPE3 53
TYPE 4/TYPE5 55
TYPE 6/TYPE7 56
Schematic 59
Wiring Diagram — KEYLES— 60
FIG. 1 60
FIG. 2 61
FIG. 3 62
Terminals and Reference Value for BCM 63
Terminals and Reference Value for IPDM E/R 63
CONSULT-II Function 64
CONSULT-II Inspection Procedure 64
“MULTI REMOTE ENT” 64
CONSULT-II Application Items 65
“MULTI REMOTE CONTENT” 65
Work Flow 67
Trouble Diagnosis Chart by Symptom 67
Key Fob Battery and Function Check 69
ACC Switch Check 70
Door Switch Check 71
DRIVER SIDE DOOR SWITCH AND PASSENGER SIDE DOOR SWITCH CHECK 71
BACK DOOR SWITCH CHECK 72
Key Switch Check 73
IPDM E/R Operation Check 74
Horn Function Check 75
Headlamp Alarm Check 75
Interior Lamp and Step Lamp Operation Check 75
ID Code Entry Procedure 76
KEY FOB ID SETUP WITH CONSULT-II 76
KEY FOB ID SETUP WITHOUT CONSULT-II 78
Key Fob Battery Replacement 79
DOOR 80
Fitting Adjustment 80
DOOR 80
STRIKER ADJUSTMENT 80
Removal and Installation 81
REMOVAL 81
INSTALLATION 81
Door Weather-strip 82
DOOR LOCK 83
Component Structure 83
Inspection and Adjustment. 83
EXTERIOR HANDLE ROD ADJUSTMENT 83
Removal and Installation 83
REMOVAL 83
INSTALLATION 84
Disassembly and Assembly 84
DISASSEMBLY 84
ASSEMBLY 84
BACK DOOR 85
Fitting Adjustment 85
VERTICAL/LATERAL CLEARANCE ADJUSTMENT 85
Back Door Assembly 86
REMOVAL 86
INSTALLATION 86
INSPECTION 86
Removal and Installation of Back Door Striker 87
REMOVAL 87
INSTALLATION 87
Removal and Installation of Back Door Stay 87
REMOVAL 87
INSTALLATION 87
Removal and Installation of Back Door Weatherstrip.. 88
BACK DOOR LOCK 89
Removal and Installation of Back Door Lock & Back Door Opener Actuator 89
REMOVAL 89
INSTALLATION 89
INSPECTION 89
Removal and Installation of Back Door Opener Switch (External) 90
REMOVAL 90
INSTALLATION 90
VEHICLE SECURITY (THEFT WARNING) SYSTEM.. 91
Component Parts and Harness Connector Location.. 91
System Description 92
DESCRIPTION 92
POWER SUPPLY 93
INITIAL CONDITION TO ACTIVATE THE SYSTEM 93
VEHICLE SECURITY SYSTEM ALARM OPERATION 93
VEHICLE SECURITY SYSTEM DEACTIVATION.. 94
PANIC ALARM OPERATION 94
CAN Communication System Description 94
TYPE 1 95
TYPE 2/TYPE3 96
TYPE 4/TYPE5 98
TYPE 6/TYPE7 100
Schematic 102
Wiring Diagram -VEHSEC- 103
FIG. 1 103
FIG. 2 104
FIG. 3 105
FIG. 4 106
FIG. 5 107
Terminals and Reference Value for BCM 108
Terminals and Reference Value for IPDM E/R 108
CONSULT-II Function 109
CONSULT-II BASIC OPERATION PROCEDURE .109
CONSULT-II APPLICATION ITEM 110
Trouble Diagnosis 111
WORK FLOW 111
Preliminary Check 112
Symptom Chart 113
Diagnostic Procedure 1 114

1 – 1 DOOR SWITCH CHECK 114
1 – 2 HOOD SWITCH CHECK 116
Diagnostic Procedure 2 118
SECURITY INDICATOR LAMP CHECK 118
Diagnostic Procedure 3 119
DOOR KEY CYLINDER SWITCH CHECK 119
Diagnostic Procedure 4 119
VEHICLE SECURITY HORN ALARM CHECK .. 119
Diagnostic Procedure 5 119
VEHICLE SECURITY HEADLAMP ALARM CHECK 119
Diagnostic Procedure 6 120
DOOR LOCK AND UNLOCK SWITCH CHECK 120
NVIS (NISSAN VEHICLE IMMOBILIZER SYSTEM-NATS) 121
Component Parts and Harness Connector Location 121
System Description 122
System Composition 123
ECM Re-communicating Function 123
Wiring Diagram — NATS — 124
Terminals and Reference Value for BCM 125
CONSULT-II 125
CONSULT-II INSPECTION PROCEDURE 125
CONSULT-II DIAGNOSTIC TEST MODE FUNCTION 126
HOW TO READ SELF-DIAGNOSTIC RESULTS 127
NVIS (NATS) SELF-DIAGNOSTIC RESULTS ITEM CHART 127
Work Flow 128
Trouble Diagnoses 130
SYMPTOM MATRIX CHART 1 130
SYMPTOM MATRIX CHART 2 131
DIAGNOSTIC SYSTEM DIAGRAM 131
Diagnostic Procedure 1 132
Diagnostic Procedure 2 133
Diagnostic Procedure 3 134
Diagnostic Procedure 4 136
Diagnostic Procedure 5 137
Diagnostic Procedure 6 138
How to Replace NATS Antenna Amp. 139
INTEGRATED HOMELINK TRANSMITTER 140
Wiring Diagram —TRNSCV— 140
Trouble Diagnoses 141
DIAGNOSTIC PROCEDURE 141
BODY REPAIR 143
Body Exterior Paint Color 143
Body Component Parts 144
UNDERBODY COMPONENT PARTS 144
BODY COMPONENT PARTS 146
Corrosion Protection 148
DESCRIPTION 148
ANTI-CORROSIVE WAX 149
UNDERCOATING 150
STONE GUARD COAT 151
Body Sealing 152
DESCRIPTION 152
Body Construction 156
BODY CONSTRUCTION 156
Body Alignment 157
BODY CENTER MARKS 157
PANEL PARTS MATCHING MARKS 158
DESCRIPTION 159
ENGINE COMPARTMENT 160
UNDERBODY 162
PASSENGER COMPARTMENT 164
REAR BODY 166
Handling Precautions For Plastics 168
HANDLING PRECAUTIONS FOR PLASTICS . 168
LOCATION OF PLASTIC PARTS 169
Precautions In Repairing High Strength Steel 171
HIGH STRENGTH STEEL (HSS) USED IN NISSAN VEHICLES 171
Replacement Operations 174
DESCRIPTION 174
HOODLEDGE 177
FRONT SIDE MEMBER 178
FRONT SIDE MEMBER (PARTIAL REPLACEMENT) 180
FRONT PILLAR 181
OUTER SILL 183
REAR FENDER 184
REAR PANEL 185
REAR FLOOR REAR 186
REAR SIDE MEMBER EXTENSION 188

PRECAUTIONS

PFP:00001

Precautions for Supplemental Restraint System (SRS) “AIR BAG” and “SEAT BELT PRE-TENSIONER”

AIS000BP

The Supplemental Restraint System such as “AIR BAG” and “SEAT BELT PRE-TENSIONER”, used along with a front seat belt, helps to reduce the risk or severity of injury to the driver and front passenger for certain types of collision. This system includes seat belt switch inputs and dual stage front air bag modules. The SRS system uses the seat belt switches to determine the front air bag deployment, and may only deploy one front air bag, depending on the severity of a collision and whether the front occupants are belted or unbelted.
Information necessary to service the system safely is included in the SRS and SB section of this Service Manual.

WARNING:

- **To avoid rendering the SRS inoperative, which could increase the risk of personal injury or death in the event of a collision which would result in air bag inflation, all maintenance must be performed by an authorized NISSAN/INFINITI dealer.**
- **Improper maintenance, including incorrect removal and installation of the SRS, can lead to personal injury caused by unintentional activation of the system. For removal of Spiral Cable and Air Bag Module, see the SRS section.**
- **Do not use electrical test equipment on any circuit related to the SRS unless instructed to in this Service Manual. SRS wiring harnesses can be identified by yellow and/or orange harnesses or harness connectors.**

Precautions for Battery Service

AIS003N6

Before disconnecting the battery, lower both the driver and passenger windows. This will prevent any interference between the window edge and the vehicle when the door is opened/closed. During normal operation, the window slightly raises and lowers automatically to prevent any window to vehicle interference. The automatic window function will not work with the battery disconnected.

Precautions for Work

AIS000BQ

- After removing and installing the opening/closing parts, be sure to carry out fitting adjustments to check their operation.
- Check the lubrication level, damage, and wear of each part. If necessary, grease or replace it.

Wiring Diagnosis and Trouble Diagnosis

AIS000BR

When you read wiring diagrams, refer to the following:

- GI-15, "How to Read Wiring Diagrams"
- PG-4, "POWER SUPPLY ROUTING CIRCUIT"

When you perform trouble diagnosis, refer to the following:

- GI-11, "HOW TO FOLLOW TEST GROUPS IN TROUBLE DIAGNOSES"
- GI-27, "How to Perform Efficient Diagnosis for an Electrical Incident"
  Check for any Service bulletins before servicing the vehicle.

PREPARATION

PFP:00002

Special Service Tools

AIS000BS

The actual shapes of Kent-Moore tools may differ from those of special service tools illustrated here.

Tool number (Kent-Moore No.) Tool name		Description
(J-39570) Chassis ear	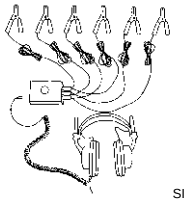 SIIA0993E	Locating the noise
(J-43980) NISSAN Squeak and Rattle Kit	 SIIA0994E	Repairing the cause of noise

Commercial Service Tools

AIS000BT

Tool name		Description
Engine ear	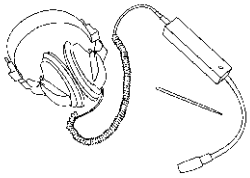 SIIA0995E	Locating the noise

SQUEAK AND RATTLE TROUBLE DIAGNOSIS

PFP:00000

Work Flow

AIS000BU

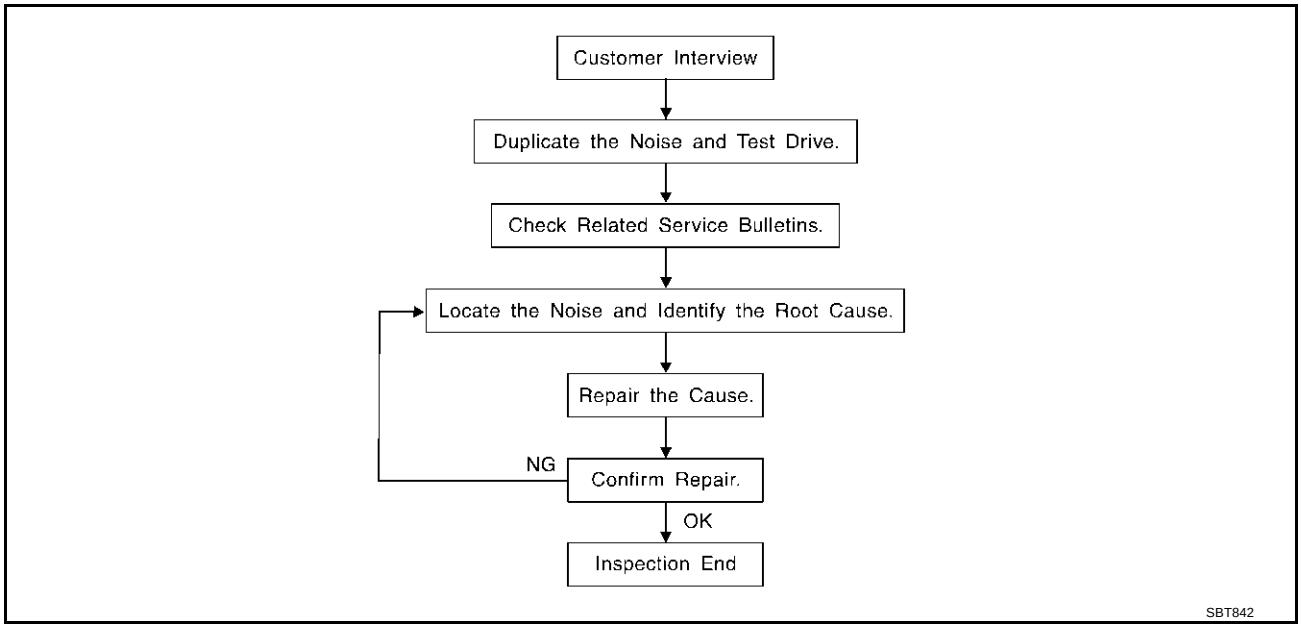

CUSTOMER INTERVIEW

Interview the customer if possible, to determine the conditions that exist when the noise occurs.Use the Diagnostic Worksheet during the interview to document the facts and conditions when the noise occurs and any customer's comments; refer to BL-10, "Diagnostic Worksheet" . This information is necessary to duplicate the conditions that exist when the noise occurs.

- The customer may not be able to provide a detailed description or the location of the noise. Attempt to obtain all the facts and conditions that exist when the noise occurs (or does not occur).
- If there is more than one noise in the vehicle, be sure to diagnose and repair the noise that the customer is concerned about. This can be accomplished by test driving the vehicle with the customer.
- After identifying the type of noise, isolate the noise in terms of its characteristics. The noise characteristics are provided so the customer, service adviser and technician are all speaking the same language when defining the noise.
- Squeak —(Like tennis shoes on a clean floor)
  Squeak characteristics include the light contact/fast movement/brought on by road conditions/hard surfaces=higher pitch noise/softer surfaces=lower pitch noises/edge to surface=chirping
- Creak—(Like walking on an old wooden floor)
  Creak characteristics include firm contact/slow movement/twisting with a rotational movement/pitch dependent on materials/often brought on by activity.
- Rattle—(Like shaking a baby rattle)
  Rattle characteristics include the fast repeated contact/vibration or similar movement/loose parts/missing clip or fastener/incorrect clearance.
- Knock —(Like a knock on a door)
  Knock characteristics include hollow sounding/sometimes repeating/often brought on by driver action.
- Tick—(Like a clock second hand)
  Tick characteristics include gentle contacting of light materials/loose components/can be caused by driver action or road conditions.
- Thump—(Heavy, muffled knock noise)
  Thump characteristics include softer knock/dead sound often drought on by activity.
- Buzz—(Like a bumble bee)
  Buzz characteristics include high frequency rattle/firm contact.
- Often the degree of acceptable noise level will vary depending upon the person. A noise that you may judge as acceptable may be very irritating to the customer.
- Weather conditions, especially humidity and temperature, may have a great effect on noise level.

DUPLICATE THE NOISE AND TEST DRIVE

If possible, drive the vehicle with the customer until the noise is duplicated. Note any additional information on the Diagnostic Worksheet regarding the conditions or location of the noise. This information can be used to duplicate the same conditions when you confirm the repair.
If the noise can be duplicated easily during the test drive, to help identify the source of the noise, try to duplicate the noise with the vehicle stopped by doing one or all of the following:

1) Close a door.
2) Tap or push/pull around the area where the noise appears to be coming from.
3) Rev the engine.
4) Use a floor jack to recreate vehicle "twist".
5) At idle, apply engine load (electrical load, half-clutch on M/T model, drive position on A/T model).
6) Raise the vehicle on a hoist and hit a tire with a rubber hammer.

- Drive the vehicle and attempt to duplicate the conditions the customer states exist when the noise occurs.
- If it is difficult to duplicate the noise, drive the vehicle slowly on an undulating or rough road to stress the vehicle body.

CHECK RELATED SERVICE BULLETINS

After verifying the customer concern or symptom, check ASIST for Technical Service Bulletins (TSBs) related to that concern or symptom.
If a TSB relates to the symptom, follow the procedure to repair the noise.

LOCATE THE NOISE AND IDENTIFY THE ROOT CAUSE

1. Narrow down the noise to a general area. To help pinpoint the source of the noise, use a listening tool (Chassis Ear: J-39570, Engine Ear and mechanics stethoscope).
2. Narrow down the noise to a more specific area and identify the cause of the noise by:

- removing the components in the area that you suspect the noise is coming from.
  Do not use too much force when removing clips and fasteners, otherwise clips and fastener can be broken or lost during the repair, resulting in the creation of new noise.
- tapping or pushing/pulling the component that you suspect is causing the noise.
  Do not tap or push/pull the component with excessive force, otherwise the noise will be eliminated only temporarily.
- feeling for a vibration with your hand by touching the component(s) that you suspect is (are) causing the noise.
- placing a piece of paper between components that you suspect are causing the noise.
- looking for loose components and contact marks.
  Refer to BL-8, "Generic Squeak and Rattle Troubleshooting" .

REPAIR THE CAUSE

- If the cause is a loose component, tighten the component securely.
- If the cause is insufficient clearance between components:
  - separate components by repositioning or loosening and retightening the component, if possible.
  - insulate components with a suitable insulator such as urethane pads, foam blocks, felt cloth tape or urethane tape. A Nissan Squeak and Rattle Kit (J-43980) is available through your authorized Nissan Parts Department.

CAUTION:
Do not use excessive force as many components are constructed of plastic and may be damaged.
Always check with the Parts Department for the latest parts information.
The following materials are contained in the Nissan Squeak and Rattle Kit (J-43980). Each item can be ordered separately as needed.
URETHANE PADS [1.5 mm (0.059 in) thick]
Insulates connectors, harness, etc.
76268-9E005: 100 × 135 mm (3.94 × 5.31 in)/76884-71L01: 60 × 85 mm (2.36 × 3.35 in)/76884-71L02: 15 × 25 mm(0.59 × 0.98 in)
INSULATOR (Foam blocks)
Insulates components from contact.Can be used to fill space behind a panel.
73982-9E000: 45 mm (1.77 in) thick, 50 × 50 mm (1.97 × 1.97 in)/73982-50Y00: 10 mm (0.39 in) think, 50 × 50 mm (1.97 × 1.97 in)

INSULATOR (Light foam block)
80845-71L00: 30 mm (1.18 in) thick, 30 × 50 mm (1.18×1.97 in)
FELT CLOTHTAPE
Used to insulate where movement does not occur. Ideal for instrument panel applications.
68370-4B000: 15 × 25 mm (0.59 × 0.98 in) pad/68239-13E00: 5 mm (0.20 in) wide tape roll The following materials, not found in the kit, can also be used to repair squeaks and rattles.
UHMW(TEFLON) TAPE
Insulates where slight movement is present. Ideal for instrument panel applications.
SILICONE GREASE
Used in of UHMW tape that will be visible or not fit.
Note: Will only last a few months.
SILICONE SPRAY
Use when grease cannot be applied.
DUCT TAPE
Use to eliminate movement.

CONFIRM THE REPAIR

Confirm that the cause of a noise is repaired by test driving the vehicle. Operate the vehicle under the same conditions as when the noise originally occurred. Refer to the notes on the Diagnostic Worksheet.

Generic Squeak and Rattle Troubleshooting

AIS000BV

Refer to Table of Contents for specific component removal and installation information.

INSTRUMENT PANEL

Most incidents are caused by contact and movement between:

1. The cluster lid A and instrument panel
2. Acrylic lens and combination meter housing
3. Instrument panel to front pillar garnish
4. Instrument panel to windshield
5. Instrument panel mounting pins
6. Wiring harnesses behind the combination meter
7. A/C defroster duct and duct joint

These incidents can usually be located by tapping or moving the components to duplicate the noise or by pressing on the components while driving to stop the noise. Most of these incidents can be repaired by applying felt cloth tape or silicon spray (in hard to reach areas). Urethane pads can be used to insulate wiring harness.

CAUTION:
Do not use silicone spray to isolate a squeak or rattle. If you saturate the area with silicone, you will not be able to recheck the repair.

CENTER CONSOLE

Components to pay attention to include:

1. Shifter assembly cover to finisher
2. A/C control unit and cluster lid C
3. Wiring harnesses behind audio and A/C control unit

The instrument panel repair and isolation procedures also apply to the center console.

DOORS

Pay attention to the:

1. Finisher and inner panel making a slapping noise
2. Inside handle escutcheon to door finisher
3. Wiring harnesses tapping
4. Door striker out of alignment causing a popping noise on starts and stops

Tapping or moving the components or pressing on them while driving to duplicate the conditions can isolate many of these incidents. You can usually insulate the areas with felt cloth tape or insulator foam blocks from the Nissan Squeak and Rattle Kit (J-43980) to repair the noise.

TRUNK

Trunk noises are often caused by a loose jack or loose items put into the trunk by the owner.
In addition look for:

1. Trunk lid dumpers out of adjustment
2. Trunk lid striker out of adjustment
3. The trunk lid torsion bars knocking together
4. A loose license plate or bracket

Most of these incidents can be repaired by adjusting, securing or insulating the item(s) or component(s) causing the noise.

SUNROOF/HEADLINER

Noises in the sunroof/headliner area can often be traced to one of the following:

1. Sunroof lid, rail, linkage or seals making a rattle or light knocking noise
2. Sunvisor shaft shaking in the holder
3. Front or rear windshield touching headliner and squeaking

Again, pressing on the components to stop the noise while duplicating the conditions can isolate most of these incidents. Repairs usually consist of insulating with felt cloth tape.

SEATS

When isolating seat noise it's important to note the position the seat is in and the load placed on the seat when the noise is present. These conditions should be duplicated when verifying and isolating the cause of the noise.
Cause of seat noise include:

1. Headrest rods and holder
2. A squeak between the seat pad cushion and frame
3. The rear seatback lock and bracket

These noises can be isolated by moving or pressing on the suspected components while duplicating the conditions under which the noise occurs. Most of these incidents can be repaired by repositioning the component or applying urethane tape to the contact area.

UNDERHOOD

Some interior noise may be caused by components under the hood or on the engine wall. The noise is then transmitted into the passenger compartment.
Causes of transmitted underhood noise include:

1. Any component mounted to the engine wall
2. Components that pass through the engine wall
3. Engine wall mounts and connectors
4. Loose radiator mounting pins
5. Hood bumpers out of adjustment
6. Hood striker out of adjustment

These noise can be difficult to isolate since they cannot be reached from the interior of the vehicle. The best method is to secure, move or insulate one component at a time and test drive the vehicle. Also, engine RPM or load can be changed to isolate the noise. Repairs can usually be made by moving, adjusting securing, or insulating the component causing the noise.

Diagnostic Worksheet

AIS000BW

SQUEAK & RATTLE DIAGNOSTIC WORKSHEET

Dear Nissan Customer:
We are concerned about your satisfaction with your Nissan vehicle. Repairing a squeak or rattle sometimes can be very difficult. To help us fix your Nissan right the first time, please take a moment to note the area of the vehicle where the squeak or rattle occurs and under what conditions. You may be asked to take a test drive with a service advisor or technician to ensure we confirm the noise you are hearing.

I. WHERE DOES THE NOISE COME FROM? (circle the area of the vehicle)
The illustrations are for reference only, and may not reflect the actual configuration of your vehicle.

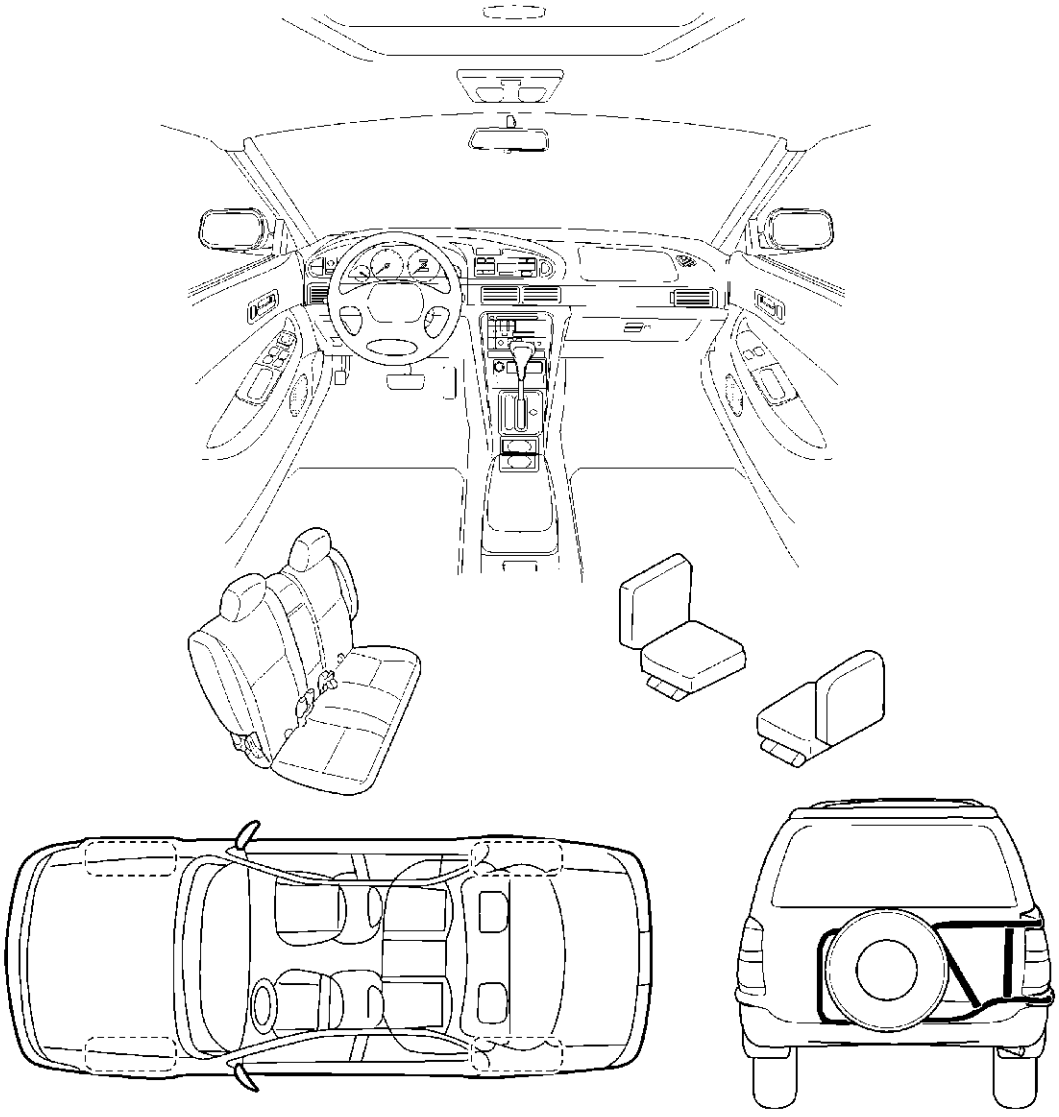

Continue to the back of the worksheet and briefly describe the location of the noise or rattle. In addition, please indicate the conditions which are present when the noise occurs.

PIIB0723E

SQUEAK & RATTLE DIAGNOSTIC WORKSHEET- page 2

Briefly describe the location where the noise occurs:

_____

_____

II. WHEN DOES IT OCCUR? (check the boxes that apply)

- ❏ anytime
- ❏ 1st time in the morning
- ❏ only when it is cold outside
- ❏ only when it is hot outside
- ❏ after sitting out in the sun
- ❏ when it is raining or wet
- ❏ dry or dusty conditions
- ❏ other: _____

III. WHEN DRIVING:

- ❏ through driveways
- ❏ over rough roads
- ❏ over speed bumps
- ❏ only at about ____ mph
- ❏ on acceleration
- ❏ coming to a stop
- ❏ on turns : left, right or either (circle)
- ❏ with passengers or cargo
- ❏ other: _____
- ❏ after driving ____ miles or ____ minutes

IV. WHAT TYPE OF NOISE?

- ❏ squeak (like tennis shoes on a clean floor)
- ❏ creak (like walking on an old wooden floor)
- ❏ rattle (like shaking a baby rattle)
- ❏ knock (like a knock on a door)
- ❏ tick (like a clock second hand)
- ❏ thump (heavy, muffled knock noise)
- ❏ buzz (like a bumble bee)

TO BE COMPLETED BY DEALERSHIP PERSONNEL
Test Drive Notes:

_____

_____

	YES	NO	Initials of person performing
Vehicle test driven with customer	❏	❏	_____
- Noise verified on test drive	❏	❏	
- Noise source located and repaired	❏	❏	_____
- Follow up test drive performed to confirm repair	❏	❏	_____

VIN: _____ Customer Name: _____

W.O. #: _____ Date: _____

SBT844

This form must be attached to Work Order

HOOD

PFP:F5100

Fitting Adjustment

AIS000BX

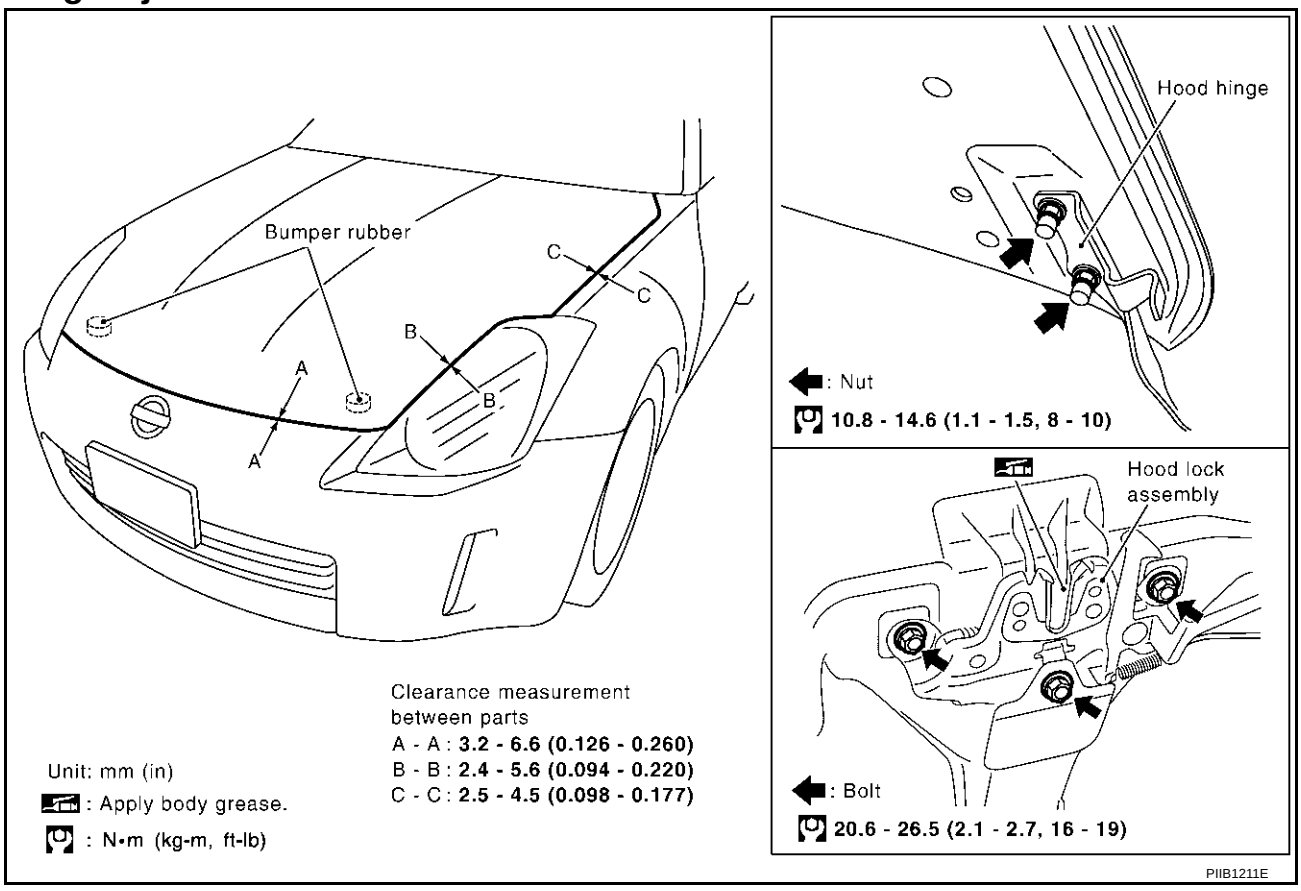

FRONT END HEIGHT ADJUSTMENT AND LATERAL/LONGITUDINAL CLEARANCE ADJUSTMENT

1. Remove the hood lock and adjust the height by rotating the bumper rubber until the hood becomes 1 to 1.5 mm (0.04 to 0.059 in) lower than the fender.
2. Temporarily tighten the hood lock, and position it by engaging it with the hood striker. Check the lock and striker for looseness, and tighten the lock mounting bolt to the specified torque.

CAUTION:

Adjust right/left gap between hood and each part to the following specification.

Hood and head lamp (B–B) : Less than 2.0mm

Hood and fender (C–C) : Less than 1.0mm

SURFACE HEIGHT ADJUSTMENT

1. Remove the hood lock, and adjust the surface height difference of the hood and fender according to the fitting standard dimension, by rotating RH and LH bumper rubbers.
2. Install the hood lock temporarily, and align the hood striker and lock so that the centers of striker and lock become vertical viewed from the front, by moving the hood lock laterally.
3. Check that the secondary latch is properly engaged with the secondary striker with hood's own weight by dropping it from approx. 200 mm (7.87 in) height or by pressing it lightly approx. 3 kg (29 N).

   CAUTION:

   Do not drop the hood from 300 mm (11.81 in) height or higher.
4. Move the hood lock up and down so that the striker and lock are engaged firmly with the hood closed.
5. Tighten the lock mounting bolts to the specified torque.

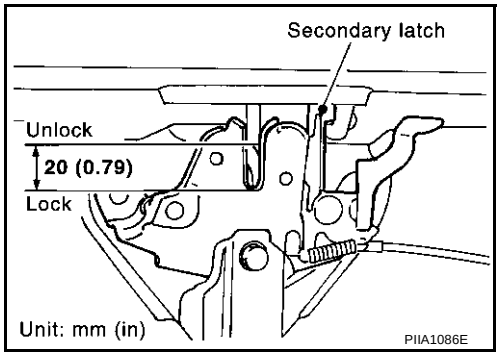

Removal and Installation of Hood Assembly

AIS000BY

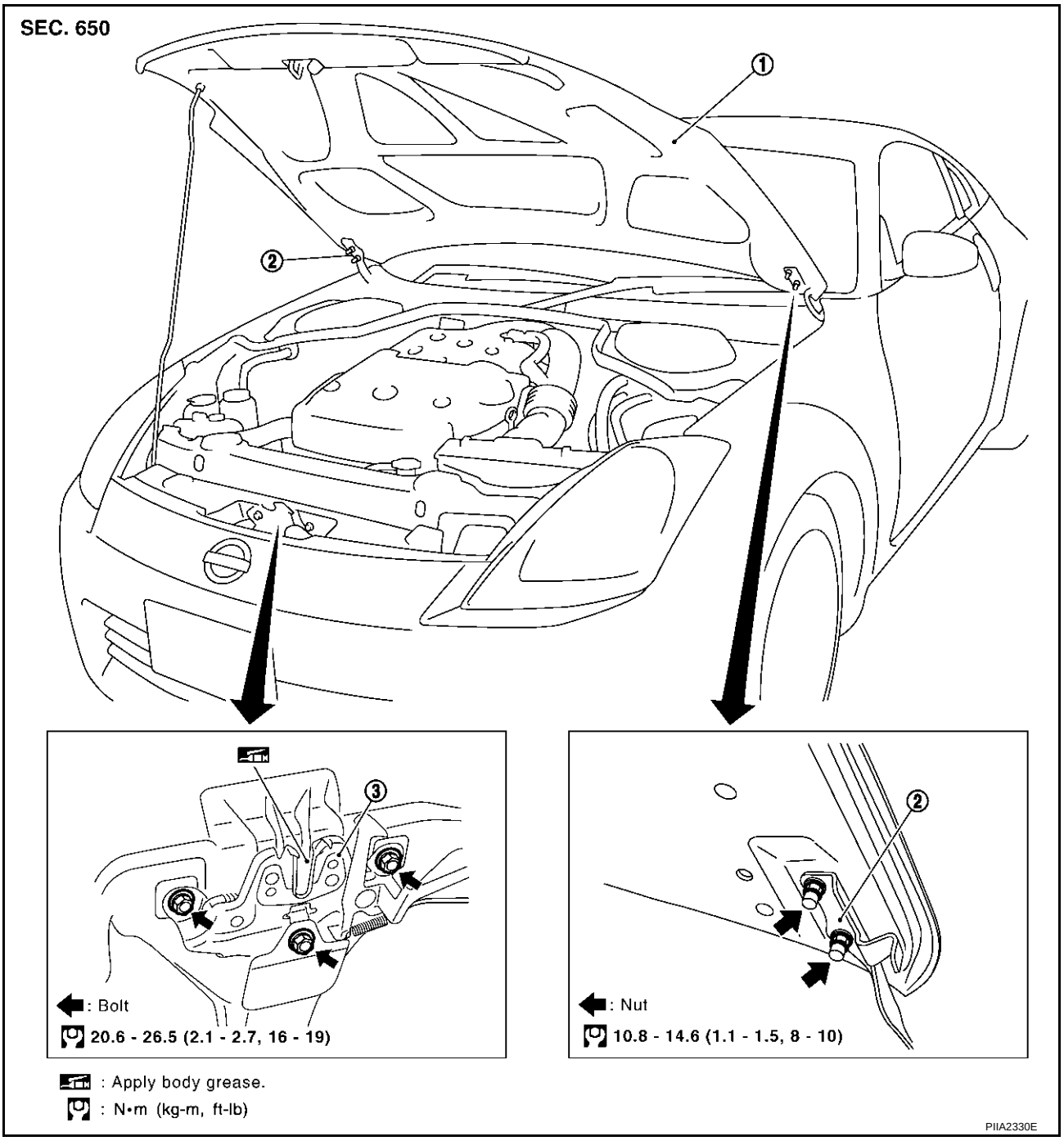

1. Hood assembly
2. Hood hinge
3. Hood lock assembly

REMOVAL

1. Remove the hinge mounting nuts on the hood to remove the hood assembly.

CAUTION:

Operate with two workers, because of its heavy weight.

INSTALLATION

Install in the reverse order of removal.

Removal and Installation of Hood Lock Control

AIS000BZ

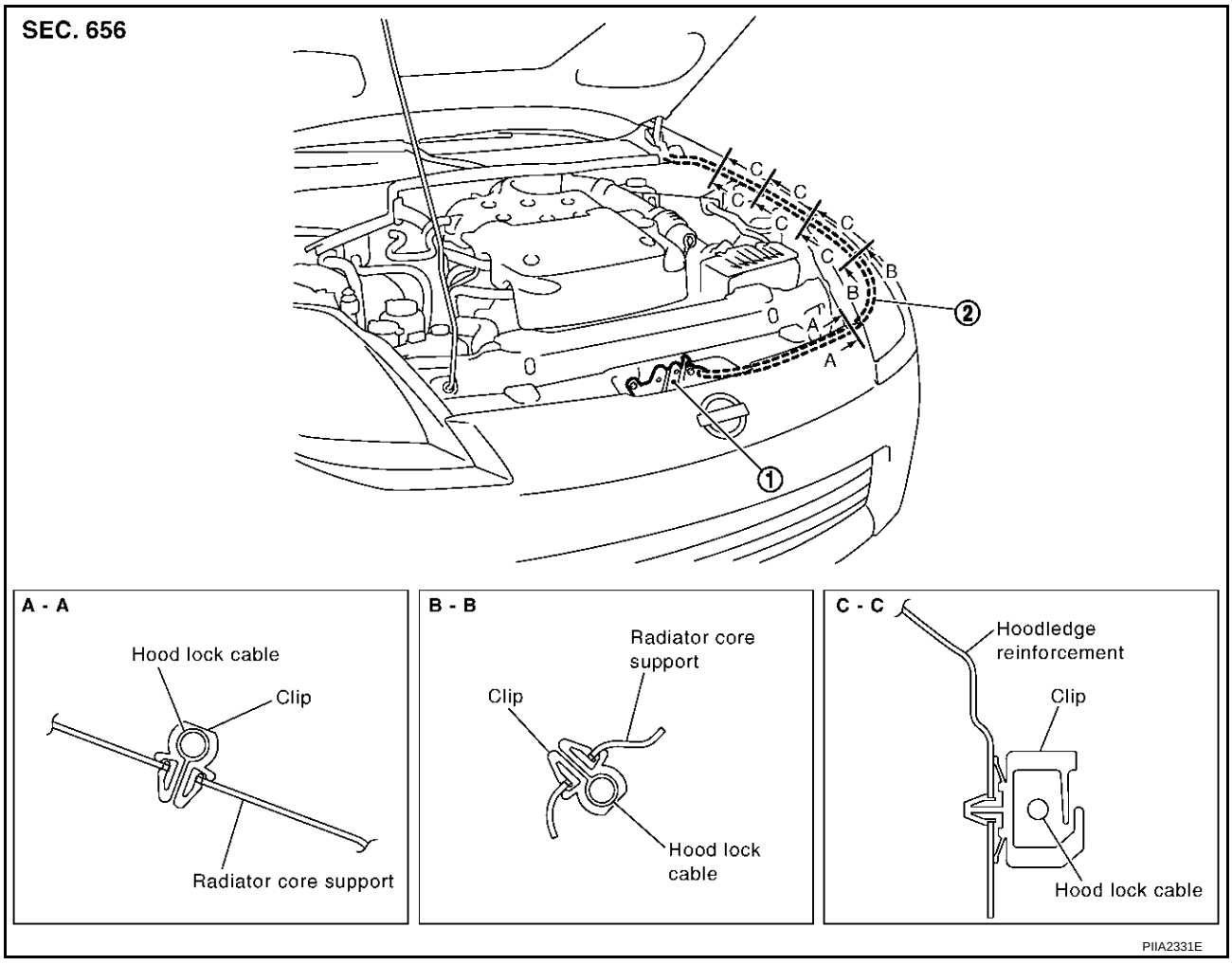

1. Hood lock assembly
2. Hood lock cable

REMOVAL

1. Remove the fender protector (LH). Refer to EI-21, "Removal and Installation" .
2. Remove the hood lock assembly.
3. Remove the dash side finisher. Refer to IP-11, "Removal and Installation" .
4. Remove hood lock cable and unclip it from portion of radiator core support.
5. While pulling the hood lock cable, remove hood lock cable connected to hood opener handle.
6. Remove grommet on dash board, and pull hood lock cable toward passenger compartment.

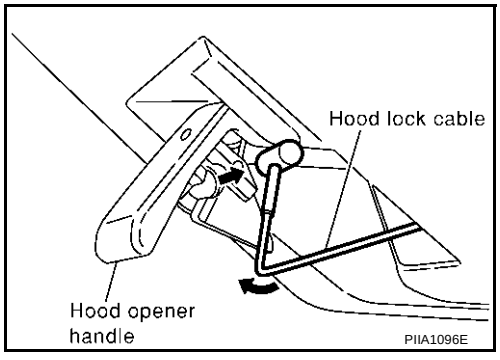

CAUTION:

While pulling, be careful not to damage (peeling) the outside of the hood lock cable.

INSTALLATION

1. Pull the hood lock cable through the panel hole to the engine compartment.
   Be careful not to bend the cable too much, keeping the radius 100 mm (3.94 in) or more.
2. Check that the cable is not offset from the positioning grommet, and push the grommet into the panel hole securely.
3. Apply the sealant to the grommet (at * mark) properly.
4. Install while pulling hood lock cable.

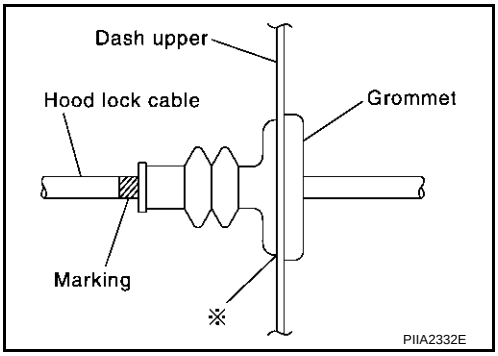

5. Install the hood lock cable securely to the hood lock.
6. Install hood lock assembly.
7. After installing, check the hood lock adjustment and hood opener operation.

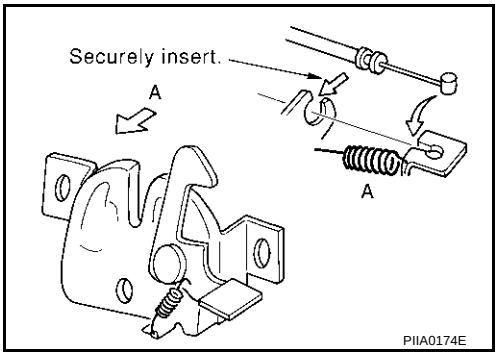

Hood Lock Control Inspection

AIS000C0

CAUTION:

If the hood lock cable is bent or deformed, replace it.

1. Check that the secondary latch is properly engaged with the secondary striker with hood's own weight by dropping it from approx. 200 mm (7.87 in) height.
2. While operating the hood opener, carefully check that the front end of the hood is raised by approx. 20 mm (0.79 in). Also check that the hood opener returns to the original position.

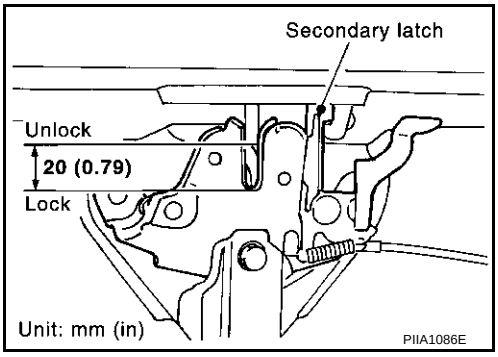

3. Check the hood lock lubrication condition. If necessary, apply “body grease” to the points shown in the figure.

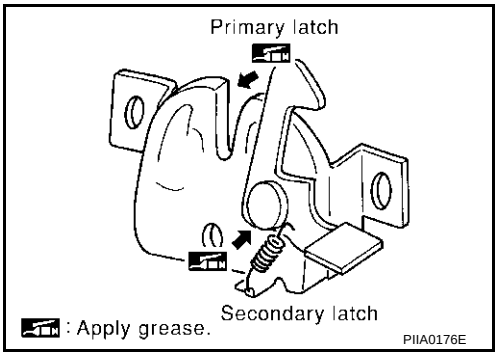

RADIATOR CORE SUPPORT

PFP:62500

Removal and Installation

AIS000C1

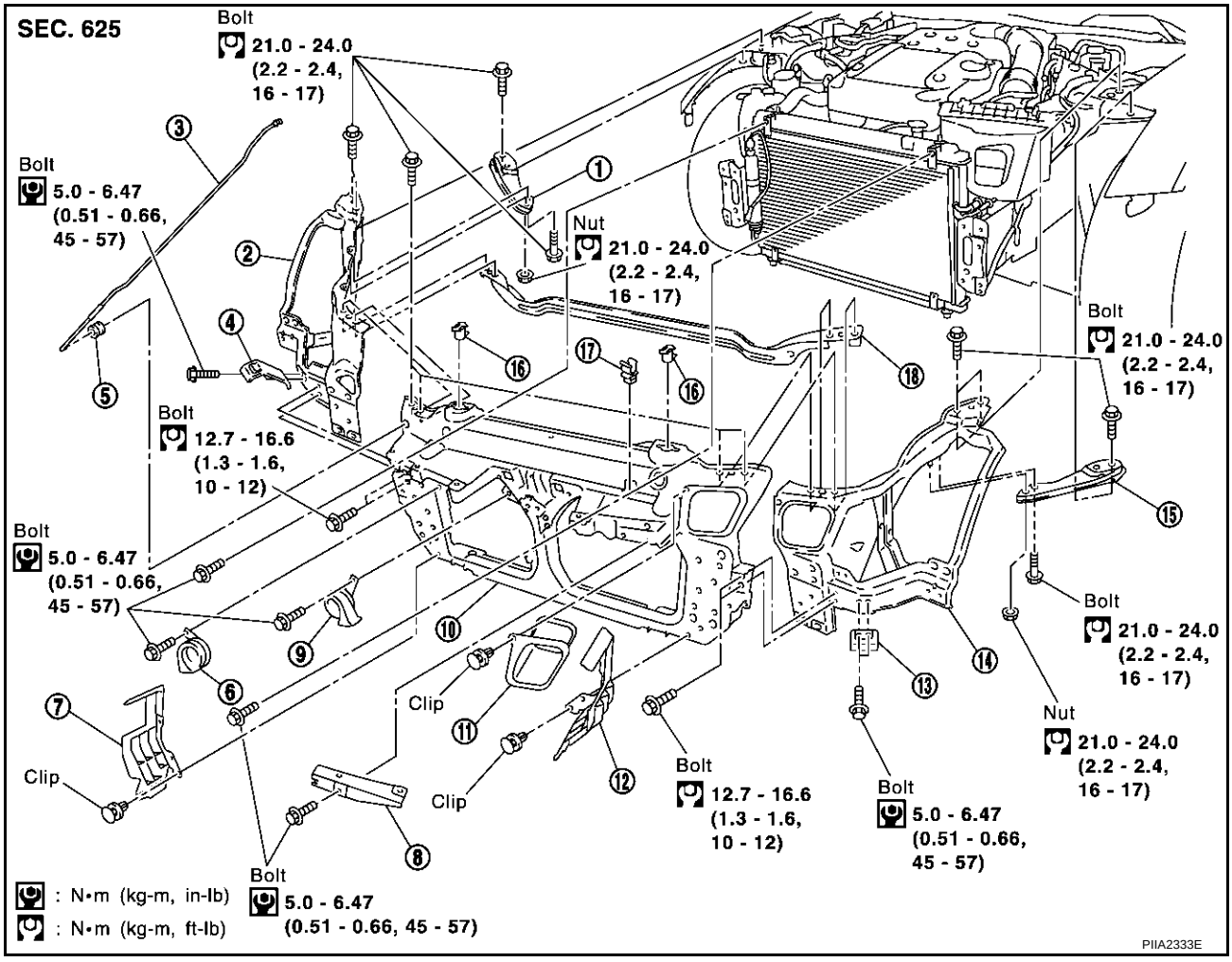

1.	Radiator core support side stay (RH)	2.	Radiator core support side (RH)	3.	Hood stay
4.	Bumper retainer (RH)	5.	Grommet	6.	Horn (High)
7.	Air guide (RH)	8.	Bumper fascia stay radiator core support center	9.	Horn (Low)
10.	Radiator core support center	11.	Air duct	12.	Air guide (LH)
13.	Bumper retainer (LH)	14.	Radiator core support side (LH)	15.	Radiator core support side stay (LH)
16.	Radiator upper bracket	17.	Hood rod clamp	18.	Radiator core support bar

REMOVAL

1. Remove hood assembly. Refer to BL-13, "Removal and Installation of Hood Assembly" .
2. Remove front bumper. Refer to EI-14, "Removal and Installation" .
3. Remove head lamp (LH/RH). Refer to LT-34, "Removal and Installation" .
4. Remove hood lock assembly, and then hood lock cable. Refer to BL-14, "Removal and Installation of Hood Lock Control" .
5. Remove washer tank. Refer to WW-36, "Removal and Installation for Washer Tank" .
6. Remove crash zone sensor. Refer to SRS-45, "Removal and Installation" .
7. Remove washer tank inlet clip. Refer to WW-36, "Removal and Installation for Washer Tank" .
8. Remove the oil cooler. Refer to PS-34, "Removal and Installation" .
9. Remove horn connectors.
10. Remove mounting harness clip on radiator core support center and side to separate the harness.
11. Remove resonator mounting screws.

12. Remove radiator upper bracket, and radiator core support side and radiator core support hood ledge stay bolts. Remove radiator core support center and side together.

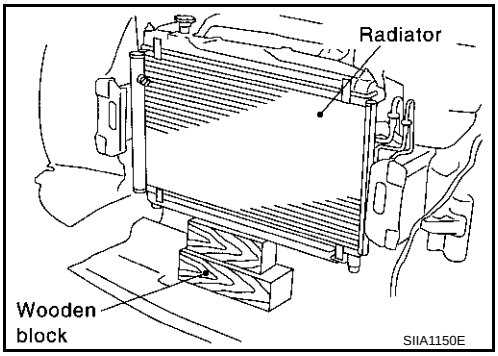

CAUTION:
Put a wooden block under the radiator assembly to prevent the radiator assembly from falling.

13. Remove radiator core support center and side together.
14. After removing radiator core support center and side together, the following parts are separated.
    - Remove the hood stay, grommet and hood rod clamp
    - Horn (High/Low)
    - Air duct
    - Air guide (LH/RH)
    - Bumper fascia stay radiator core support center
    - Bumper retainer (LH/RH)
    - Radiator core support side and radiator core support side bar
    - Radiator core support side hood ledge stay (LH/RH)
    - Ambient sensor

INSTALLATION

Install in the reverse order of removal.

CAUTION:
After installing, check the hood lock adjustment and hood opener operation. **BL-12, "Fitting Adjustment"** **.**

POWER DOOR LOCK SYSTEM

PFP:24814

Component Parts and Harness Connector Location

AIS000C2

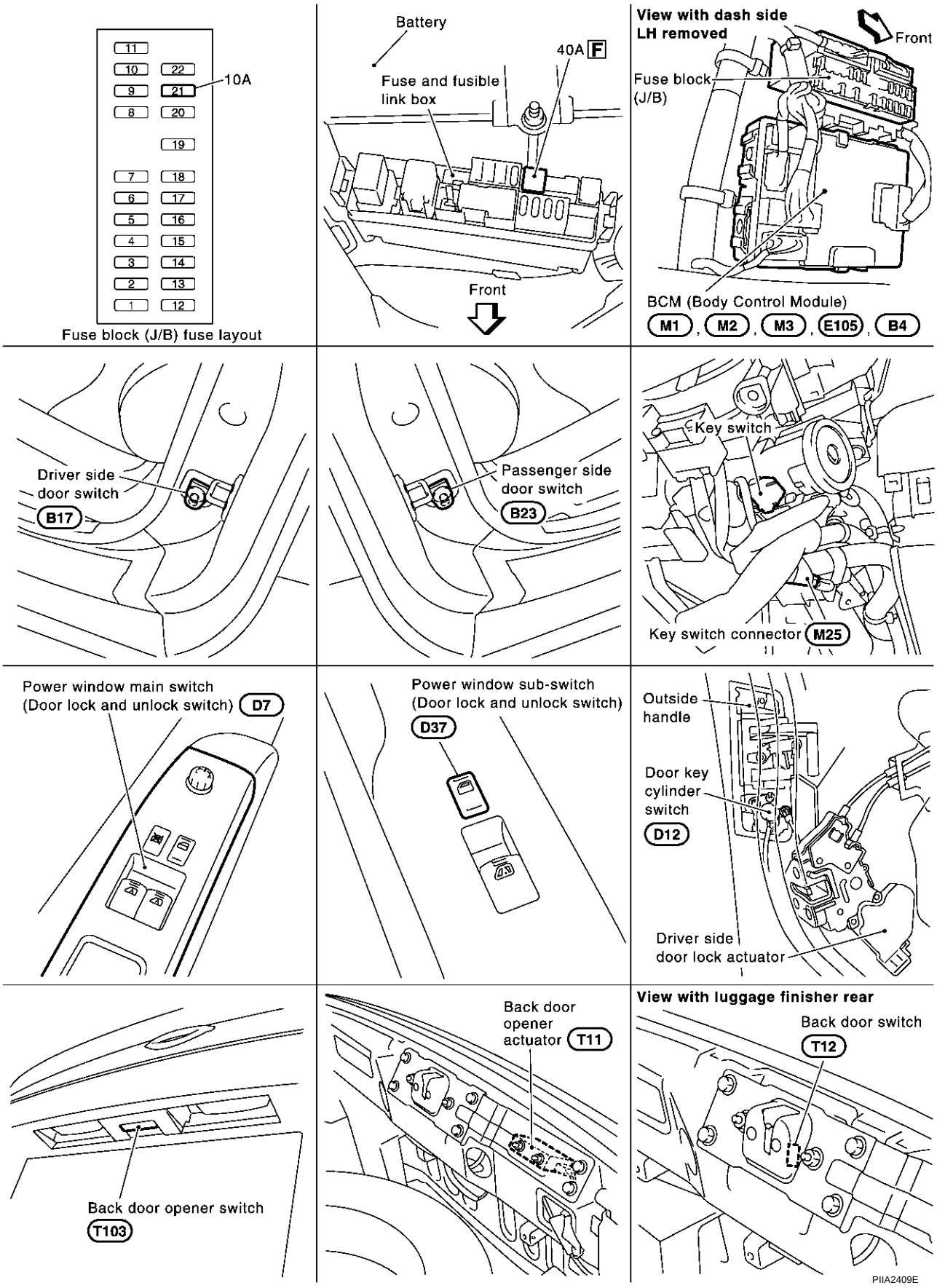

System Description

AIS000C3

Power is supplied at all times

- through 40A fusible link (letter **F** , located in the fuse and fusible link box)
- to BCM terminal 7, and
- through 10A fuse [No. 21, located in the fuse block (J/B)]
- to key switch terminal 2.

With ignition key inserted, power is supplied

- through key switch terminal 1
- to BCM terminal 62.

Ground is supplied to terminal 8 of BCM through grounds E17, E43 and F152.

When the door is locked and unlocked with power window main switch (door lock and unlock switch), ground is supplied

- to power window main switch (door lock and unlock switch) terminal 15
- through grounds M30 and M66.

Power window main switch (door lock and unlock switch) operation signal is supplied

- through power window main switch (door lock and unlock switch) terminal 12
- to BCM terminal 74.

When the door is locked and unlocked with power window sub-switch (door lock and unlock switch), ground is supplied

- to power window sub-switch (door lock and unlock switch) terminal 11
- through grounds M30 and M66.

Power window sub-switch (door lock and unlock switch) operation signal is supplied

- through power window sub-switch (door lock and unlock switch) terminal 16
- to BCM terminal 74.

When the door is locked with door key cylinder switch, ground is supplied

- to power window main switch (door lock and unlock switch) terminal 6
- through door key cylinder switch terminal 3
- through door key cylinder switch terminal 2
- through grounds M30 and M66.

Door key cylinder switch operation signal is supplied

- through power window main switch (door lock and unlock switch) terminal 12
- to BCM terminal 74.

When the door is unlocked with door key cylinder switch, ground is supplied

- to power window main switch (door lock and unlock switch) terminal 7
- through door key cylinder switch terminal 1
- through door key cylinder switch terminal 2
- through grounds M30 and M66.

Door key cylinder switch operation signal is supplied

- through power window main switch (door lock and unlock switch) terminal 12
- to BCM terminal 74.

BCM is connected to power window main switch (door lock and unlock switch) and power window sub-switch (door lock and unlock switch) as serial link.

POWER WINDOW SERIAL LINK

Power window main switch, power window sub-switch and BCM transmit and receive the signal by power window serial link.
The under mentioned signal is transmitted from power window main switch to BCM.

- Door lock and unlock switch signal.

The under mentioned signal is transmitted from power window sub-switch to BCM.

- Door lock and unlock switch signal.

OUTLINE

Functions available by operating the door lock and unlock switches on driver's door and passenger's door

- With the locking operation of door lock and unlock switch, door lock actuators of driver's and passenger's doors are locked.
- With the unlocking operation of door lock and unlock switch, door lock actuators of driver's and passenger's doors are unlocked.

Functions available by operating the key cylinder switch

- With the locking operation of door key cylinder, door lock actuators of all doors are locked.
- When door key cylinder is unlocked, door lock actuator (driver side) is unlocked.
- When door key cylinder is unlocked for the second time within 5 seconds after the first operation, door lock actuators on driver's and passenger's doors are unlocked.

Unlock mode can be changed using “WORK SUPPORT” mode in “DOOR LOCK-UNLOCK SET”.
Refer to BL-30, "WORK SUPPORT" .

Key reminder door system

When door lock and unlock switch is operated to lock doors with ignition key put in key cylinder and driver's and passenger's door open, driver and passenger door lock actuators are locked and then unlocked.

Back door opener operation

When back door opener switch is ON with driver's door unlocked,
power is supplied

- through BCM terminal 19.

Then back door opener actuator opens back door.

Schematic

AIS000C4

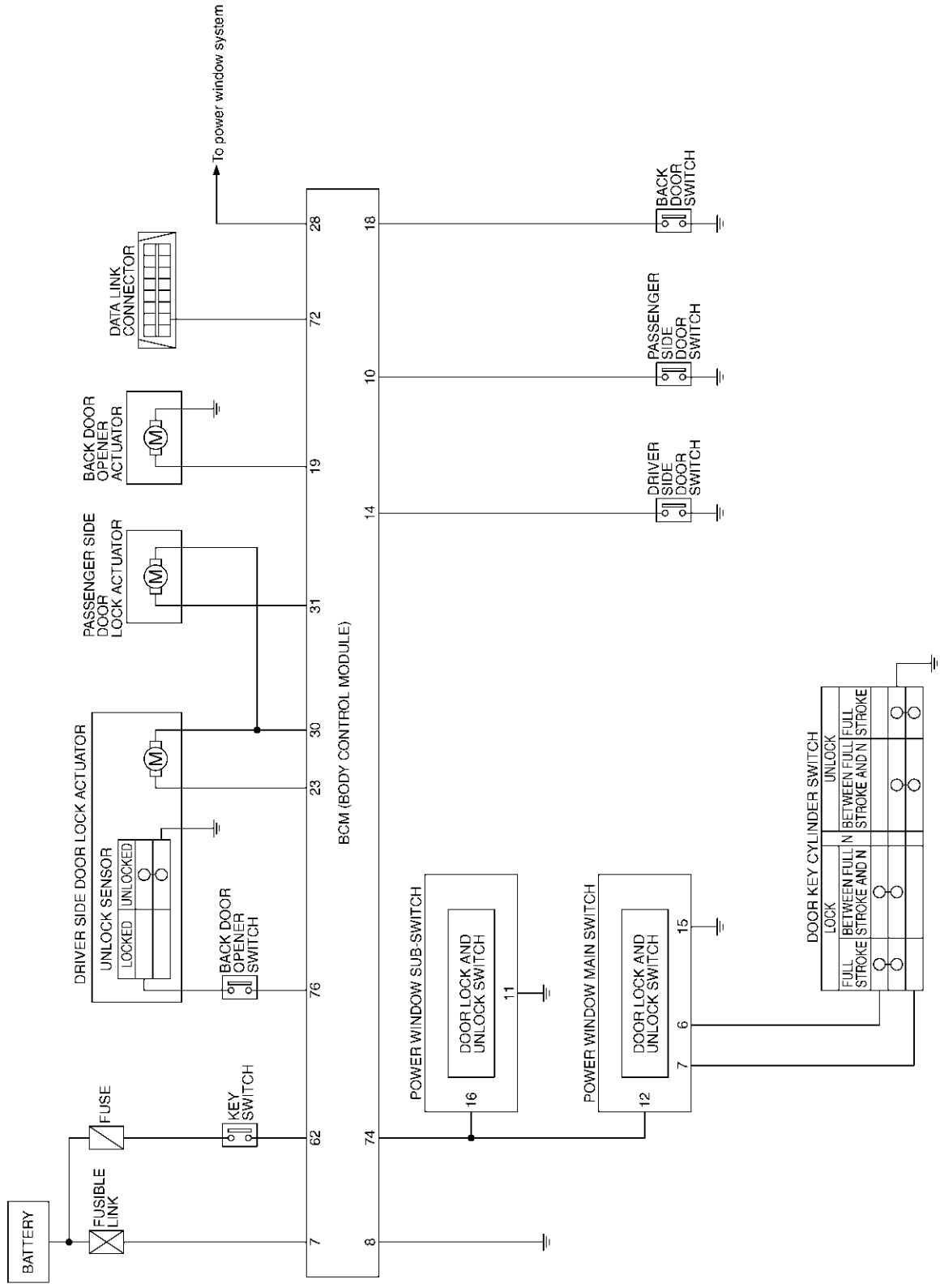

TIWT0266E

Wiring Diagram -D/LOCK-

AIS000C5

FIG. 1

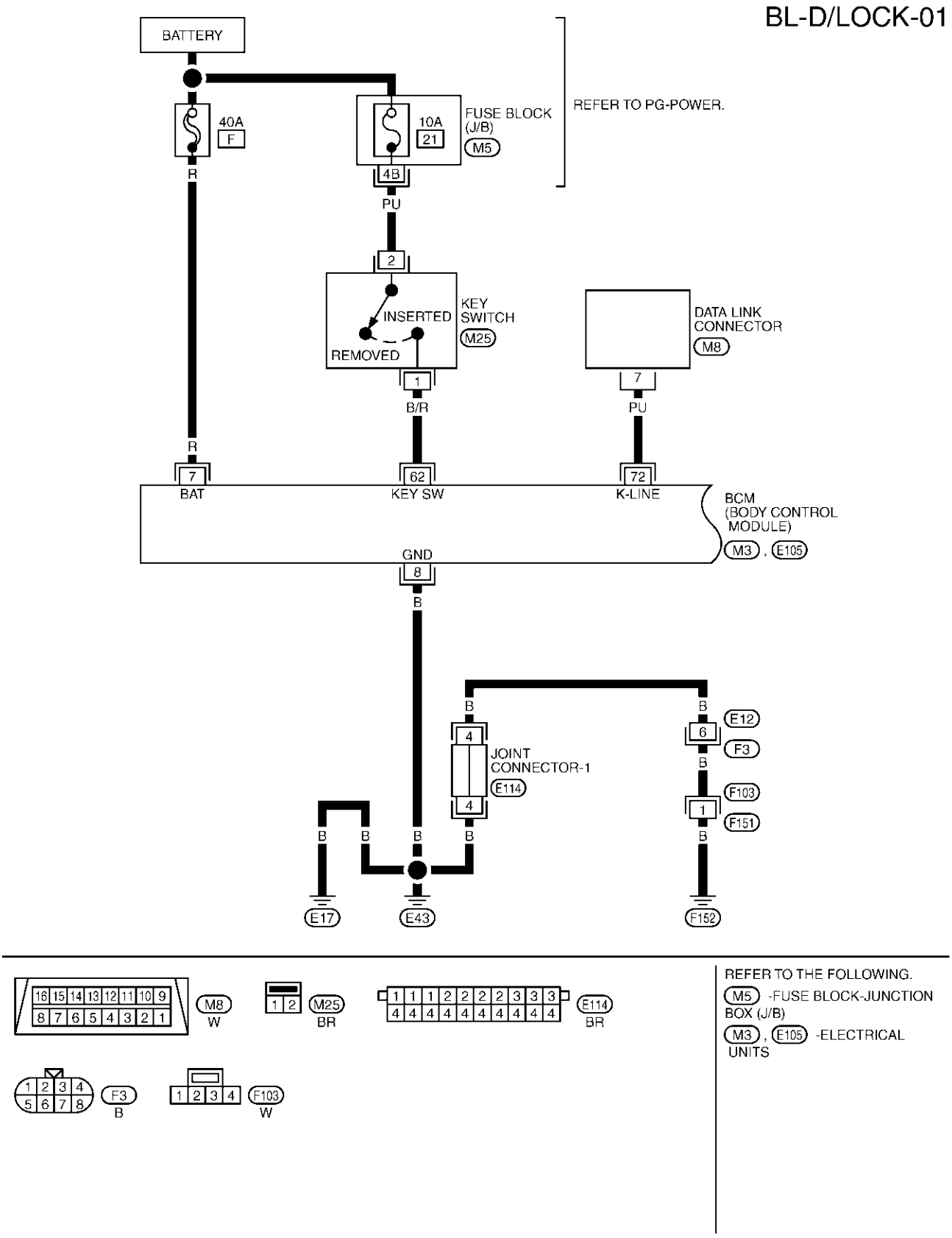

FIG. 2

BL-D/LOCK-02

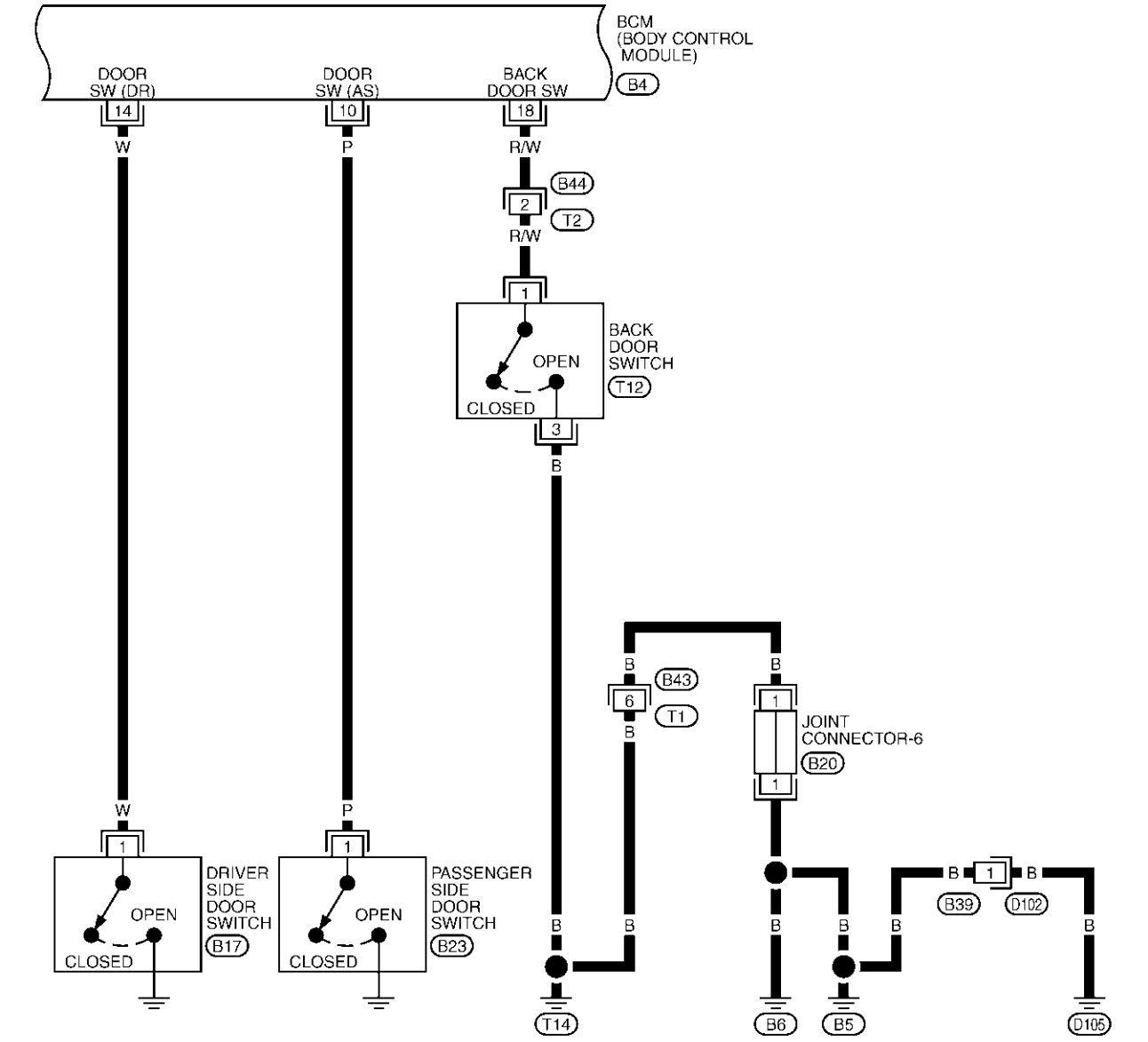

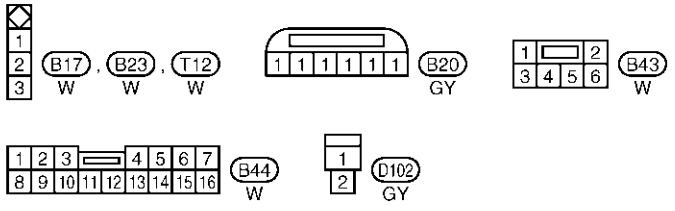

REFER TO THE FOLLOWING.
B4 -ELECTRICAL UNITS

TIWT0268E

FIG. 3

BL-D/LOCK-03

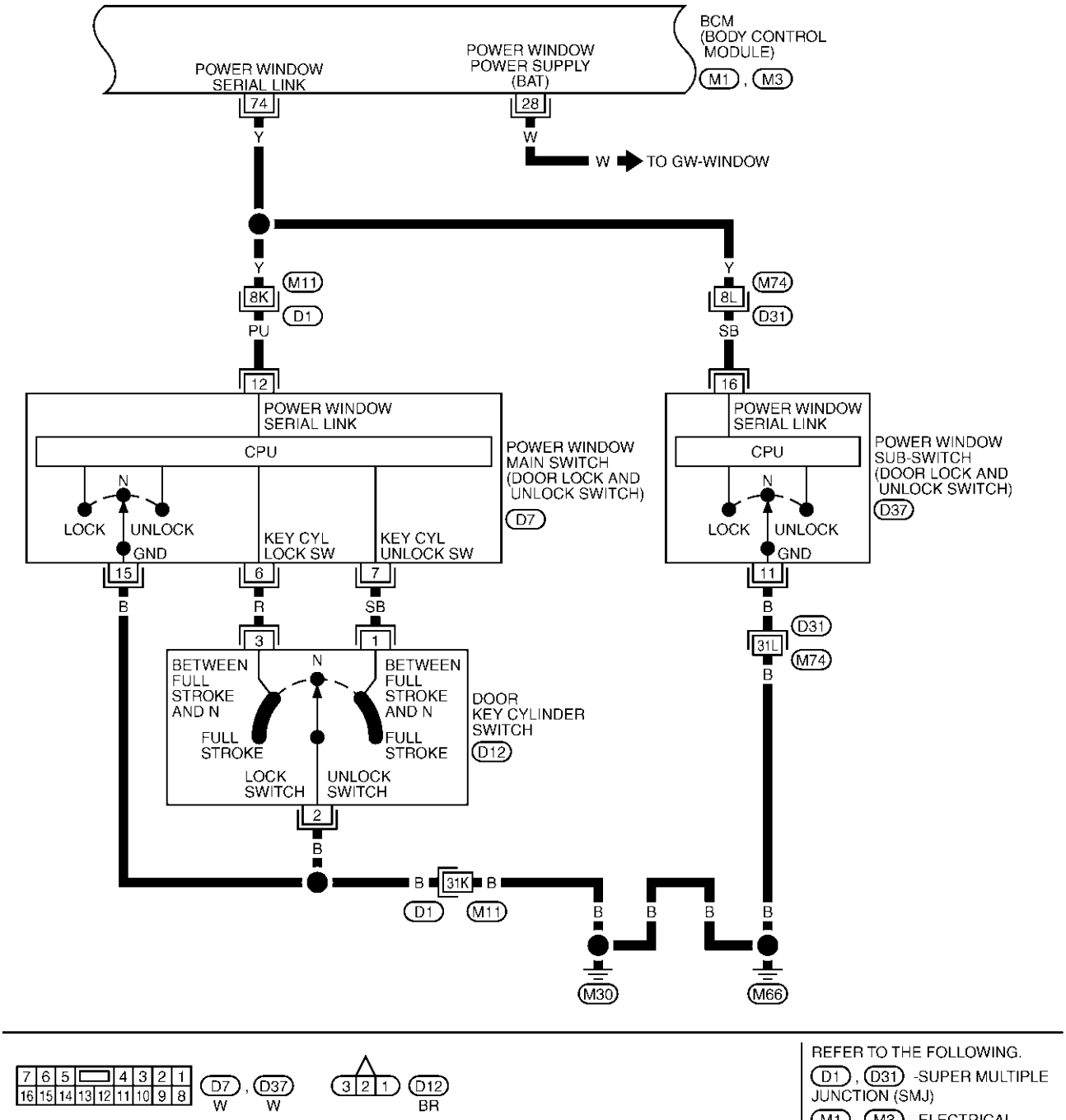

REFER TO THE FOLLOWING.

D1 , D31 -SUPER MULTIPLE JUNCTION (SMJ)

M1 , M3 -ELECTRICAL UNITS

TIWT0269E

FIG. 4

BL-D/LOCK-04

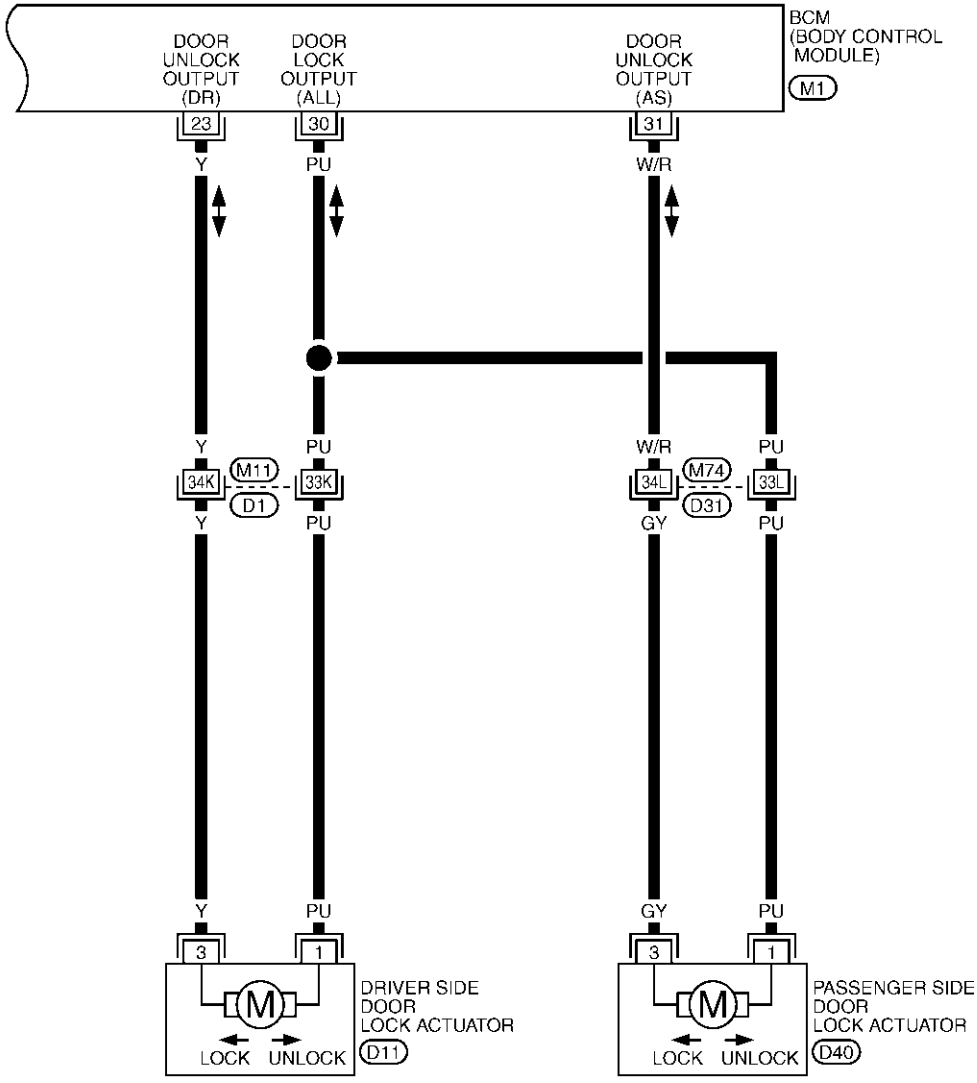

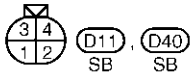

REFER TO THE FOLLOWING.
D1 , D31 -SUPER MULTIPLE JUNCTION (SMJ)
M1 -ELECTRICAL UNITS

TIWT0270E

FIG. 5

BL-D/LOCK-05

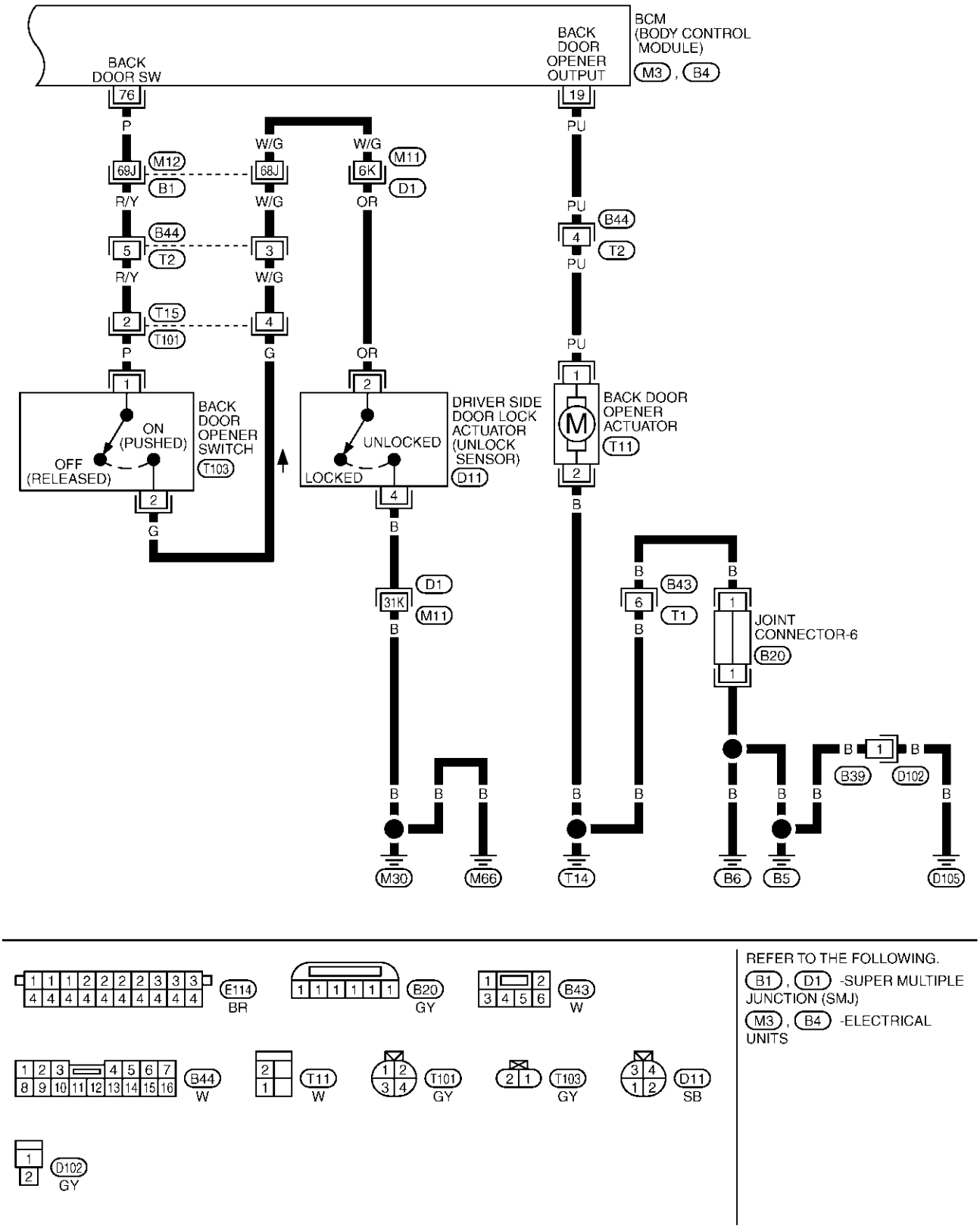

Terminals and Reference Value for BCM

AIS000C6

TERMI-NAL	WIRE COLOR	ITEM	CONDITION	VOLTAGE (V) (Approx.)
7	R	Power source (Fusible link)	—	Battery voltage
8	B	Ground	—	0
10	P	Passenger side door switch	ON (Open) → OFF (Closed)	0 → 5
14	W	Driver side door switch	ON (Open) → OFF (Closed)	0 → 5
18	R/W	Back door switch	ON (Open) → OFF (Closed)	0 → Battery voltage *
19	PU	Back door opener output	Press the back door opener switch when driver side door is unlocked	0 → Battery voltage
23	Y	Driver side door lock actuator (unlock)	Door lock / unlock switch (Free → Unlock)	0 → Battery voltage
28	W	Battery power supply	—	Battery voltage
30	PU	All door lock actuator (lock)	Door lock / unlock switch (Free → Lock)	0 → Battery voltage
31	W/R	Passenger side door lock actuator (unlock)	Door lock / unlock switch (Free → Unlock)	0 → Battery voltage
62	B/R	Ignition key switch (insert)	ON (Key inserted) → OFF (Key removed from IGN key cylinder)	Battery voltage → 0
72	PU	Data link connector	—	—
74	Y	Power window switch serial link	—	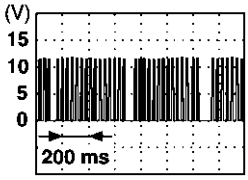 PIIA2344J
76	P	Back door opener switch	Press the back door opener switch when driver side door is unlocked	5 → 0

*When interior lamp battery saver control is in OFF: Approx. 5V

Terminal and Reference Value for Power Window Main Switch

AIS0014J

TERMI-NAL	WIRE COLOR	ITEM	CONDITION	VOLTAGE (V) (Approx.)
6	R	Key cylinder switch lock signal	Key position (Neutral → Locked)	5 → 0
7	SB	Key cylinder switch unlock signal	Key position (Neutral → Unlocked)	5 → 0
12	PU	Power window switch serial link	—	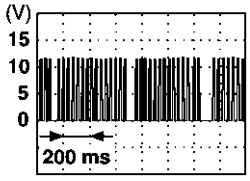 PIIA2344J
15	B	Ground	—	0

Work Flow

AIS000C7

1. Check the symptom and customer's requests.
2. Understand the outline of system. Refer to BL-19, "System Description" .
3. Perform the preliminary check. Refer to BL-28, "Preliminary Check" .
4. Does power window system operate normally? If Yes GO TO 5, If No Refer to GW-28, "Preliminary Check"
5. According to the trouble diagnosis chart, repair or replace the cause of the malfunction. Refer to BL-31, "Trouble Diagnoses Symptom Chart" .
6. Does power door lock system operate normally? If Yes, GO TO 7, If No, GO TO 5.
7. INSPECTION END.

Preliminary Check

AIS000C8

FUSE CHECK

1. FUSE INSPECTION

- Check 40A fusible link (letter F located in the fuse and fusible link box).

  NOTE:
  Refer to BL-18, "Component Parts and Harness Connector Location" .

OK or NG

OK >> GO TO 2
NG >> If fuse is blown, be sure to eliminate cause of malfunction before installing new fuse. Refer to PG-4, "POWER SUPPLY ROUTING CIRCUIT" .

2. CHECK POWER SUPPLY CIRCUIT

1. Turn ignition switch OFF.
2. Disconnect BCM connector.
3. Check voltage between BCM connector E105 terminal 7 and ground.

7 (R) – Ground **Battery voltage should exist.**

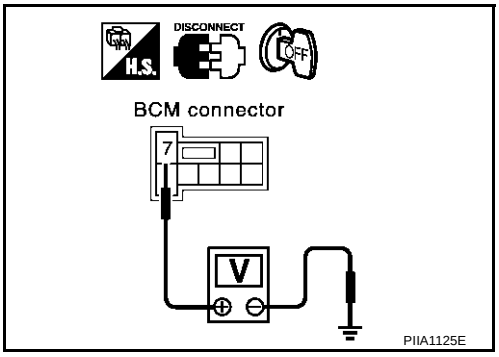

OK or NG

OK >> GO TO 3
NG >> Check BCM power supply circuit for open or short.

3. CHECK GROUND CIRCUIT

Check continuity between BCM connector E105 terminal 8 and ground.

8 (B) – Ground **Continuity should exist.**

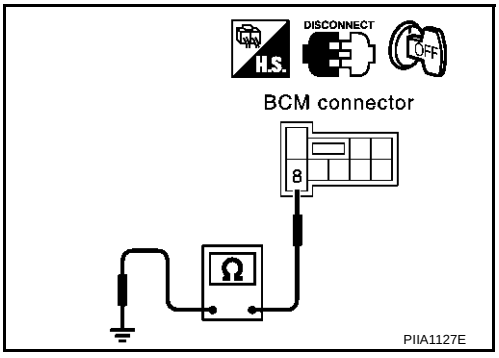

OK or NG

OK >> Power supply and ground circuit is OK.
NG >> Check BCM ground circuit for open or short.

CONSULT-II Function

AIS000C9

Power door lock system check with data monitor and active test can be executed by combining data reception and command transmission via communication line from BCM.

BCM diagnosis part	Inspection item, self-diagnosis mode	Content
Door lock	Work support	Changes the setting for each function.
	Data monitor	Displays BCM input data on real-time basis.
	Active test	Sends drive signals to door lock actuator to perform operation check.

CONSULT-II BASIC OPERATION PROCEDURE

CAUTION:

If CONSULT-II is used with no connection of CONSULT-II CONVERTER, malfunctions might be detected in self-diagnosis depending on control unit which carry out CAN communication.

1. Turn ignition switch “OFF”.
2. Connect “CONSULT-II” and CONSULT-II CONVERTER to data link connector.

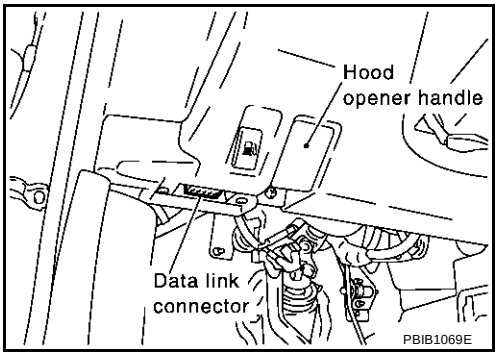

3. Turn ignition switch “ON”.
4. Touch “START(NISSAN BASED VHCL)”.

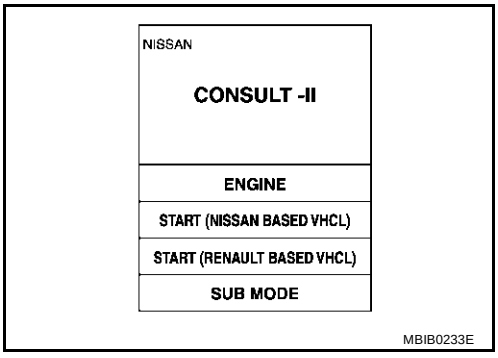

5. Touch “BCM”.
   If “BCM” is not indicated, go to GI-39 , “CONSULT-II Date Link Connector (DLC) Circuit”

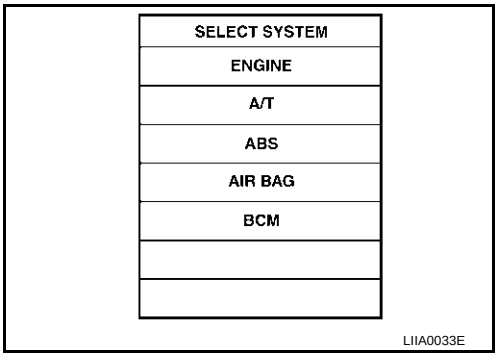

6. Touch “DOOR LOCK”.
7. Select diagnosis mode.
   “DATA MONITOR”, “ACTIVE TEST” and “WORK SUPPORT”

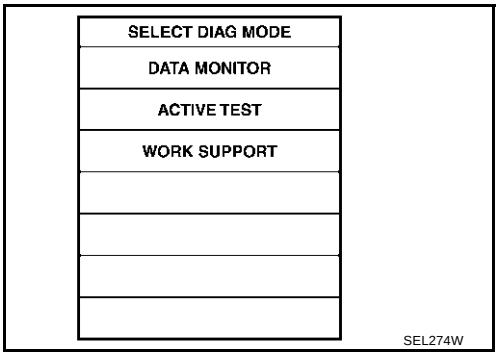

DATA MONITOR

Monitor item “operation”		Content
KEY ON SW	“ON/OFF”	Indicates [ON/OFF] condition of key switch.
LOCK SW DR/AS	“ON/OFF”	Indicates [ON/OFF] condition of lock signal from lock/unlock switch driver and passenger side.
UNLK SW DR/AS	“ON/OFF”	Indicates [ON/OFF] condition of unlock signal from lock/unlock switch driver and passenger side.
KEY CYL LK-SW	“ON/OFF”	Indicates [ON/OFF] condition of lock signal from key cylinder.
KEY CYL UN-SW	“ON/OFF”	Indicates [ON/OFF] condition of unlock signal from key cylinder.
LK BUTTON/SIG	“ON/OFF”	Indicates [ON/OFF] condition of lock signal from key fob.
UN BUTTON/SIG	“ON/OFF”	Indicates [ON/OFF] condition of unlock signal from key fob.
IGN ON SW	“ON/OFF”	Indicates [ON/OFF] condition of ignition switch.
DOOR SW-DR	“ON/OFF”	Indicates [ON/OFF] condition of driver side door switch.
DOOR SW-AS	“ON/OFF”	Indicates [ON/OFF] condition of passenger side door switch.
BACK DOOR SW	“ON/OFF”	Indicates [ON/OFF] condition of back door switch.

ACTIVE TEST

Test item	Content
ALL D/LK MTR	This test is able to check all door lock actuators lock operation. These actuators lock when “ON” on CONSULT-II screen is touched.
DR D/UN MTR	This test is able to check driver side door lock actuator unlock operation. This actuator unlock when “ON” on CONSULT-II screen is touched.
NON DR D/UN	This test is able to check door lock actuators (except driver side door lock actuator) unlock operation. These actuator unlock when “ON” on CONSULT-II screen is touched.

WORK SUPPORT

Work item	Description
DOOR LOCK-UNLOCK SET	Select unlock mode can be changed in this mode. Selects ON-OFF of select unlock mode.
ANTI-LOCK OUT SET	Key reminder door mode can be changed in this mode. Selects ON-OFF of key reminder door mode.

Trouble Diagnoses Symptom Chart

AIS000CA

Symptom	Diagnoses service procedure	Refer to page
Key reminder door system does not operate properly.	1. Preliminary check.	BL-28
	2. Key switch (Insert) check.	BL-33
	3. Door switch check.	BL-32
	4. Replace BCM.	BCS-20
Power door lock does not operate with door lock and unlock switch on power window main switch or power window sub-switch.	1. Preliminary check.	BL-28
	2. Door lock and unlock switch check.	BL-35
	3. Driver side door lock actuator check.	BL-38
	4. Passenger side door lock actuator check.	BL-40
	5. Replace BCM	BCS-20
Driver side door lock actuator does not operate.	1. Preliminary check.	BL-28
	2. Driver side door lock actuator check.	BL-38
Passenger side door lock actuator does not operate.	1. Preliminary check.	BL-28
	2. Passenger side door lock actuator check.	BL-40
Power door lock does not operate with door key cylinder operation, but operates with door lock and unlock switch.	1. Preliminary check.	BL-28
	2. Door key cylinder switch check.	BL-42
	3. Replace power window main switch.	BCS-20
Back door opener does not operate.	1. Preliminary check.	BL-28
	2. Back door opener switch check.	BL-44
	3. Back door opener actuator check.	BL-45

Door Switch Check

AIS000CB

1. CHECK DOOR SWITCH INPUT SIGNAL

With CONSULT-II

Check door switches (“DOOR SW-AS” and “DOOR SW-DR”) in “DATA MONITOR” mode with CONSULT-II.

Monitor item	Condition	
DOOR SW-DR	OPEN	: ON
	CLOSE	: OFF
DOOR SW-AS	OPEN	: ON
	CLOSE	: OFF

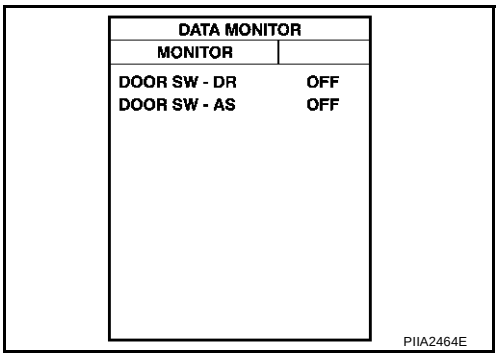

Without CONSULT-II

Check voltage between BCM connector and ground.

Item	Terminals			Condition	Voltage (V) (Approx.)
	Con-nector	(+) Terminal (Wire color)	(–)		
Passenger side door switch	B4	10 (P)	Ground	OPEN	0
				CLOSE	5
Driver side door switch		14 (W)	Ground	OPEN	0
				CLOSE	5

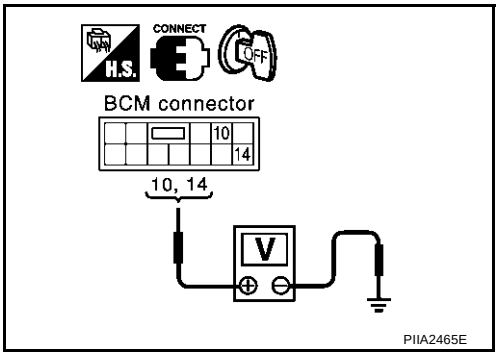

OK or NG

OK >> Door switch is OK.
NG >> GO TO 2.

2. CHECK DOOR SWITCH

1. Turn ignition switch OFF.
2. Disconnect door switch and BCM connector.
3. Check continuity between door switch connector B17, B23, terminals 1 and BCM connector B4 terminals 10, 14.

   Driver side door switch – BCM

   1 (W) – 14 (W) :Continuity should exist.

   Passenger door switch – BCM

   1 (P) – 10 (P) :Continuity should exist.

4. Check continuity between door switch harness connector B17, B23, terminals 1 and ground.

   1 (W or R) – Ground :Continuity should not exist.

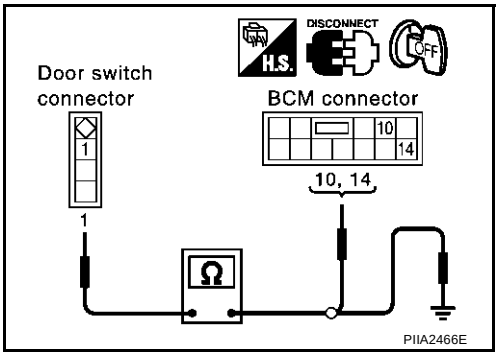

OK or NG

OK >> GO TO 3.
NG >> Repair or replace harness.

3. CHECK DOOR SWITCH

Check continuity between door switch connector B17 (driver side) or B23 (passenger side) terminal 1 (R/W) and ground.

Terminal		Door switch	Continuity
1	Ground	Pushed	No
		Released	Yes

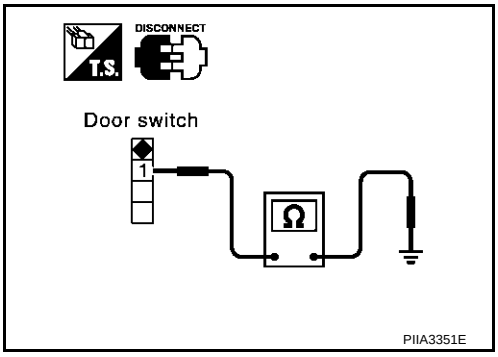

OK or NG

OK >> Further inspection is necessary. Refer to symptom chart.

NG >> Replace malfunction door switch.

Key Switch (insert) Check

AIS000CD

1. CHECK KEY SWITCH INPUT SIGNAL

With CONSULT-II

Check ignition key cylinder switch “IGN ON SW” in “DATE MONITOR” mode with CONSULT-II

- When key is inserted in ignition key cylinder

  IGN KEY SW :ON

- When key is removed in ignition key cylinder

  IGN KEY SW :OFF

Without CONSULT-II

Check voltage between BCM connector and ground.

Terminals			Condition	Voltage (V) (Approx.)
(+)		(–)		
Connector	Terminal (Wire color)	Ground		
M3	62 (B/R)		Key is inserted	Battery voltage
			Key is removed	0

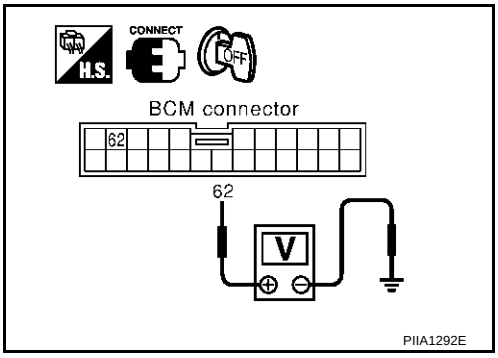

OK or NG

OK >> Key switch is OK.

NG >> GO TO 2.

2. CHECK KEY SWITCH (INSERT)

1. Turn ignition switch OFF.
2. Disconnect key switch connector.
3. Check continuity between key switch terminals 1 and 2.

Terminals		Condition	Continuity
1	2	Key is inserted	Yes
		Key is removed	No

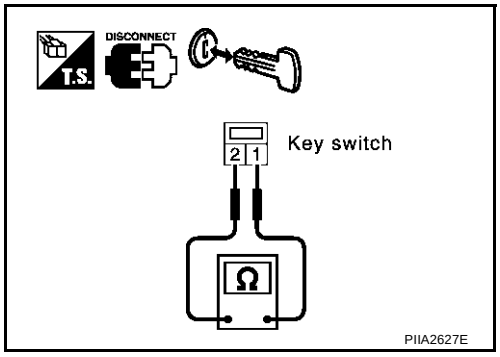

OK or NG

OK >> Check the following.
- 10A fuse [No. 21, located in fuse block (J/B)]
- Harness for open or short between key switch and fuse
- Harness for open or short between BCM and key switch

NG >> Replace key switch.

Door Lock and Unlock Switch Check

AIS000CE

1. CHECK POWER WINDOW OPERATION

Does power window system operate normally?

YES or NO?

YES >> GO TO 2
NO >> Refer to GW-31, "Trouble Diagnoses Symptom Chart" .

2. CHECK DOOR LOCK AND UNLOCK SWITCH OUTPUT SIGNAL

With CONSULT-II

Check door lock and unlock switch (“LOCK SW DR/AS”, “UNLK SW DR/AS”) in DATA MONITOR mode with CONSULT-II. Refer to BL-30, "DATA MONITOR" .

- When door lock and unlock switch is turned to LOCK

  LOCK SW DR/AS :ON

- When door lock and unlock switch is turned to UNLOCK

  UNLK SW DR/AS :ON

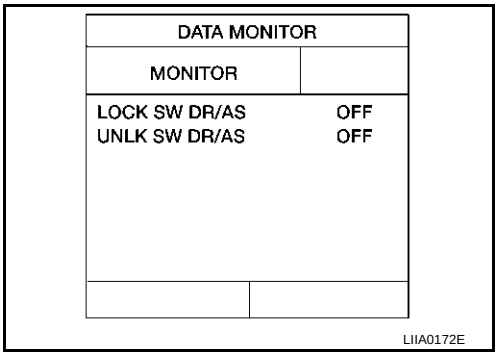

Without CONSULT-II

1. Remove key from ignition switch, and the door of driver side and passenger side is closed.
2. Check the signal between BCM connector and ground with oscilloscope when door lock and unlock switch (driver side and passenger side) is turned “LOCK” or “UNLOCK”.
3. Make sure signals which are shown in the figure below can be detected during 10 second just after door lock and unlock switch (driver side and passenger side) is turned “LOCK” or “UNLOCK”.

Terminals			Signal
(+)		(–)	
Connector	Terminal (Wire color)		
M3	74 (Y)	Ground	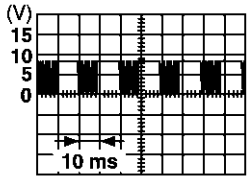

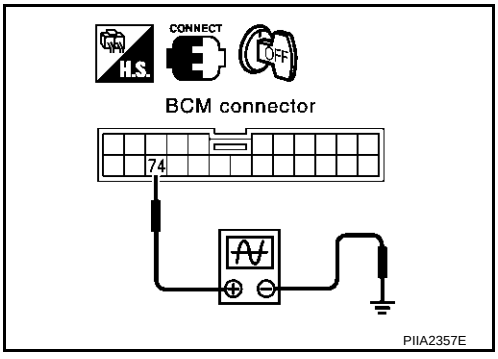

OK or NG

OK >> GO TO 3.
NG >> GO TO 4.

3. CHECK BCM OUTPUT SIGNAL

Check power window serial link (“POWER WINDOW DOWN”) in “ACTIVE TEST” mode with CONSULT-II. Refer to BL-66, "Active Test" .
When “ACTIVE TEST” is executed, the window of driver side and passenger side is lowered.

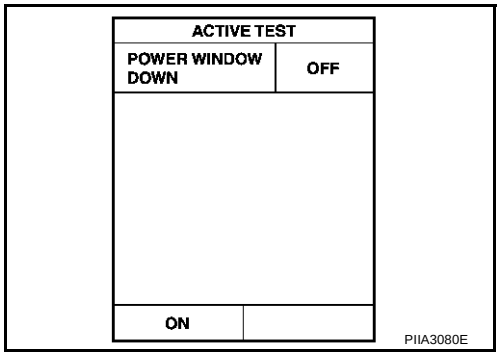

OK or NG

OK >> Further inspection is necessary. Refer to symptom chart.
NG >> Replace BCM.

4. CHECK DOOR LOCK AND UNLOCK SWITCH GROUND HARNESS

1. Turn ignition switch OFF.
2. Disconnect power window main switch (door lock and unlock switch) and power window sub-switch (door lock and unlock switch) connector.
3. Check continuity between power window main switch (door lock and unlock switch) connector D7 terminal 15 and ground.

15 (B) – Ground :Continuity should exist.

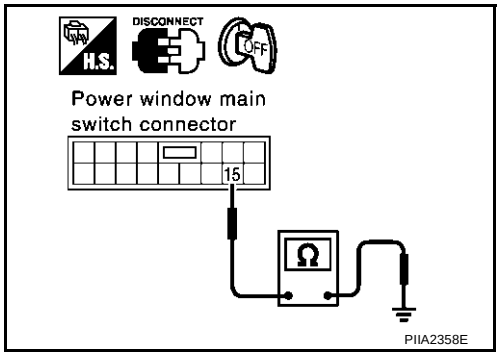

4. Check continuity between power window sub-switch (door lock and unlock switch) connector D37 terminal 11 and ground.

11 (B) – Ground :Continuity should exist.

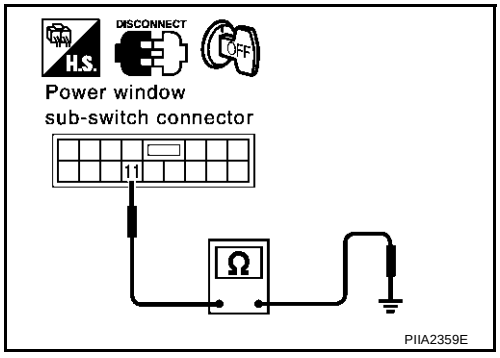

OK or NG

OK >> GO TO 5.
NG >> Repair or replace harness.

5. CHECK POWER WINDOW SERIAL LINK CIRCUIT

1. Disconnect BCM connector.
2. Check continuity between BCM connector M3 terminal 74 and power window main switch (door lock and unlock switch) connector D7 terminal 12.

74 (Y) – 12 (PU) **:Continuity should exist.**

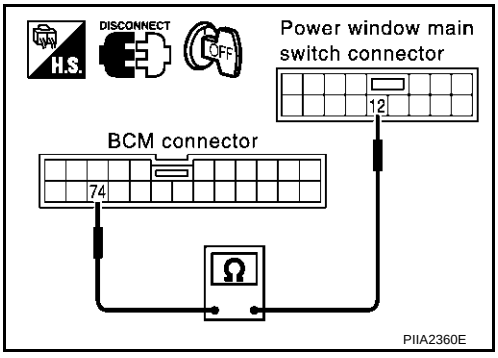

3. Check continuity between BCM connector M3 terminal 74 and power window sub-switch (door lock and unlock switch) connector D37 terminal 16.

74 (Y) – 16 (SB) **:Continuity should exist.**

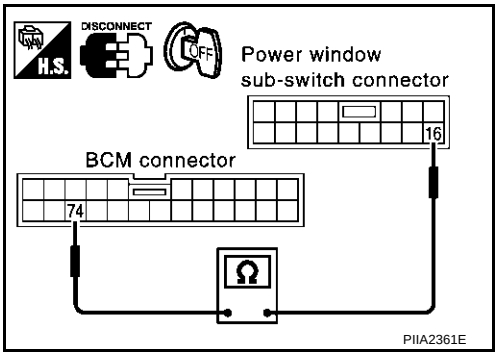

OK or NG

OK >> Replace power window main switch.
NG >> Repair or replace harness.

Driver Side Door Lock Actuator Check

AIS000CG

1. CHECK DOOR LOCK ACTUATOR SIGNAL

1. Turn ignition switch OFF.
2. Disconnect driver side door lock actuator connector.
3. Check voltage between driver side door lock actuator connector and ground.

Terminals			Condition	Voltage (V) (Approx.)
(+)		(–)		
Connector	Terminal (Wire color)			
D11	1 (PU)	Ground	Driver door lock/unlock switch is turned to LOCK.	0 → Battery voltage
	3 (Y)		Driver door lock/unlock switch is turned to UNLOCK.	0 → Battery voltage

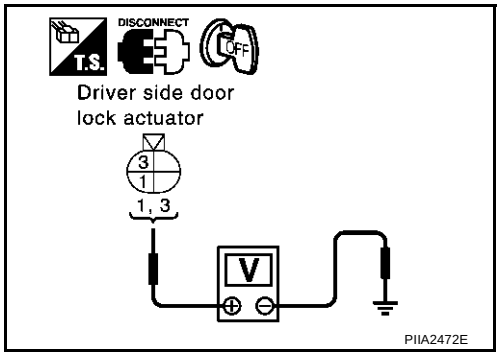

OK or NG

OK >> Replace driver side door lock actuator.
NG >> GO TO 2.

2. CHECK DOOR LOCK ACTUATOR HARNESS

1. Disconnect BCM connector.
2. Check continuity between BCM connector M1 terminals 23, 30 and driver side door lock actuator connector D11 terminals 1, 3 and ground.

BCM – Driver side door lock actuator

23 (Y) – 3 (Y) :Continuity should exist.

30 (PU) – 1 (PU) :Continuity should exist.

BCM – Ground

23 (Y) – Ground :Continuity should not exist.

30 (PU) – Ground :Continuity should not exist.

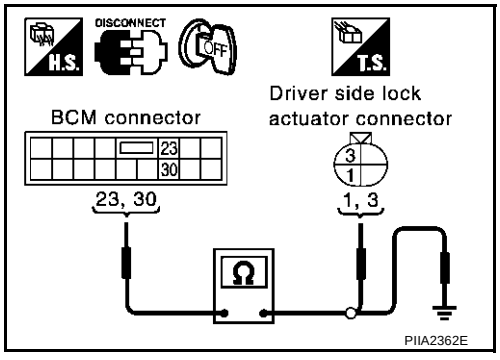

OK or NG

OK >> GO TO 3.
NG >> Repair or replace harness between BCM and driver side door lock actuator.

3. CHECK OUTPUT SIGNAL

1. Connect BCM connector.
2. Check voltage between BCM connector and ground.

Terminals			Condition	Voltage (V) (Approx.)
(+)		(–)		
Connector	Terminal (Wire color)			
M1	23 (Y)	Ground	Driver door lock/unlock switch is turned to UNLOCK.	0 → Battery voltage
	30 (PU)		Driver door lock/unlock switch is turned to LOCK.	0 → Battery voltage

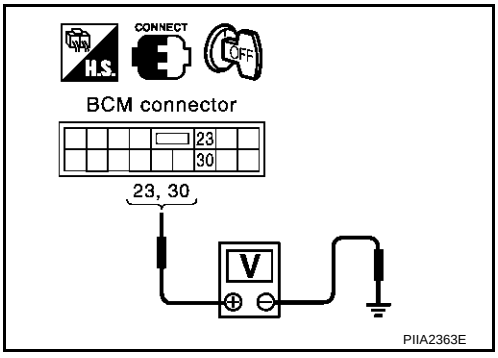

OK or NG

OK >> Check the condition of the harness and the connector.
NG >> GO TO 4

4. BCM CHECK

Check continuity between BCM connector E105 terminal 8 and connector M1 terminal 23,30.

8 (B) – 23 (Y) :Continuity should exist.
8 (B) – 30 (PU) :Continuity should exist.

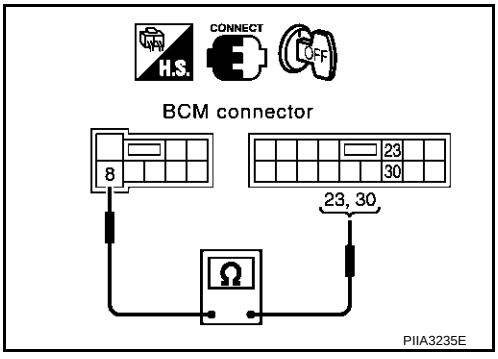

OK or NG

OK >> Check the condition of the harness and the connector.
NG >> Replace BCM.

Passenger Side Door Lock Actuator Check

AIS000CH

1. CHECK DOOR LOCK ACTUATOR SIGNAL

1. Turn ignition switch OFF.
2. Disconnect passenger side door lock actuator connector.
3. Check voltage between passenger side door lock actuator connector and ground.

Terminals			Condition	Voltage (V) (Approx.)
(+)		(–)		
Connector	Terminal (Wire color)			
D40	1 (PU)	Ground	Driver door lock/unlock switch is turned to LOCK.	0 → Battery voltage
	3 (GY)		Driver door lock/unlock switch is turned to UNLOCK.	0 → Battery voltage

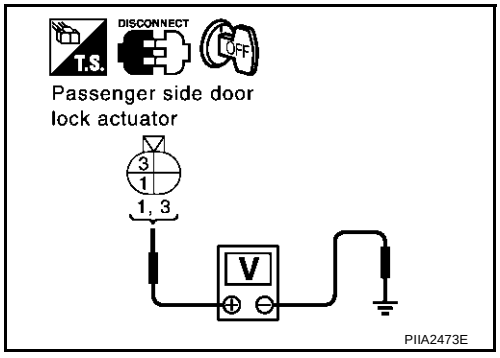

OK or NG

OK >> Replace passenger side door lock actuator.
NG >> GO TO 2.

2. CHECK DOOR LOCK ACTUATOR HARNESS

1. Disconnect BCM connector.
2. Check continuity between BCM connector M1 terminals 30, 31 and passenger side door lock actuator connector D40 terminals 1, 3 and ground.

BCM – Passenger side door lock actuator

30 (PU) – 1 (PU) :Continuity should exist.

31 (W/R) – 3 (GY) :Continuity should exist.

BCM – Ground

30 (PU) – Ground :Continuity should not exist.

31 (W/R) – Ground :Continuity should not exist.

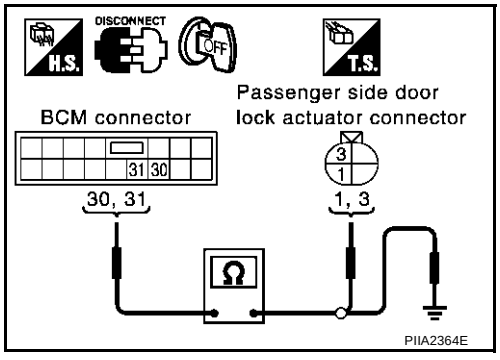

OK or NG

OK >> GO TO 3.
NG >> Repair or replace harness between BCM and passenger side door lock actuator.

3. CHECK OUTPUT SIGNAL

1. Connect BCM harness connector.
2. Check voltage between BCM connector and ground.

Terminals			Condition	Voltage (V) (Approx.)
(+)		(–)		
Connector	Terminal (Wire color)			
M1	30 (PU)	Ground	Driver door lock/unlock switch is turned to LOCK.	0 → Battery voltage
	31 (W/R)		Driver door lock/unlock switch is turned to UNLOCK.	0 → Battery voltage

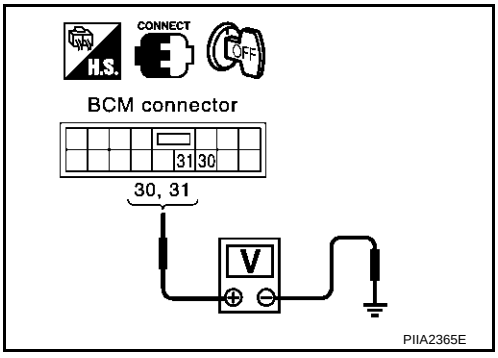

OK or NG

OK >> Check the condition of the harness and the connector.
NG >> GO TO 4

4. BCM CHECK

Check continuity between BCM connector E105 terminal 8 and connector M1 terminals 30, 31.

8 (B) – 30 (PU) :Continuity should exist.
8 (B) – 31 (W/R) :Continuity should exist.

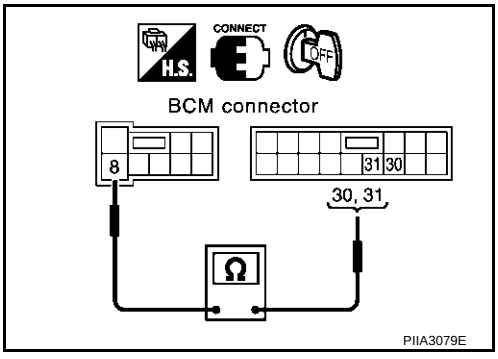

OK or NG

OK >> Check the condition of the harness and the connector.
NG >> Replace BCM.

Door Key Cylinder Switch Check

AIS000CJ

1. CHECK DOOR KEY CYLINDER SWITCH INPUT SIGNAL

With CONSULT-II

- Check door key cylinder switch ("KEY CYL LK SW") in "DATA MONITOR" mode with CONSULT-II.

  "KEY CYL LK-SW" should be "ON" when key inserted in door key cylinder is turned to lock.

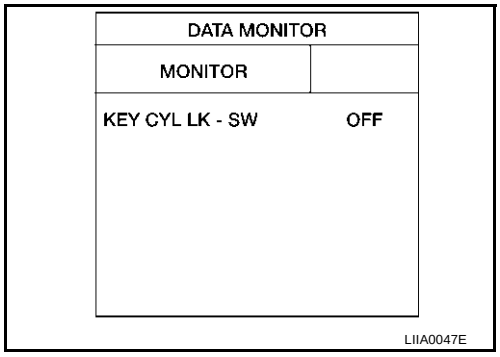

- Check door key cylinder switch ("KEY CYL UN-SW") in "DATA MONITOR" mode with CONSULT-II.

  "KEY CYL UN-SW" should be "ON" when key inserted in door key cylinder was turned to unlock.

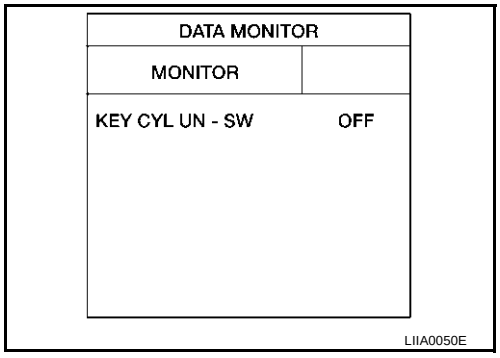

Without CONSULT-II

Check voltage between power window main switch (door lock and unlock switch) connector and ground.

Terminals			Key position	Voltage (V) (Approx.)
(+)		(–)		
Connector	Terminal (Wire color)			
D7	6 (R)	Ground	Neutral/Unlock	5
			Lock	0
	7 (SB)		Neutral/Lock	5
			Unlock	0

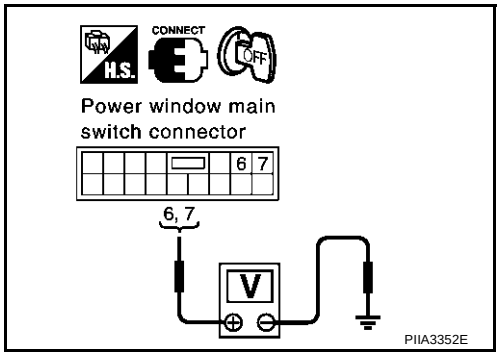

OK or NG

OK >> Further inspection is necessary. Refer to symptom chart.
NG >> GO TO 2.

2. CHECK DOOR KEY CYLINDER SWITCH CIRCUIT

1. Turn ignition switch OFF.
2. Disconnect power window main switch (door lock and unlock switch) and door key cylinder switch connector.
3. Check continuity between power window main switch (door lock and unlock switch) connector D7 terminal 6, 7 and door key cylinder switch connector D12 terminals 1, 3.

6 (R) – 3 (R) :Continuity should exist.
7 (SB) – 1 (SB) :Continuity should exist.

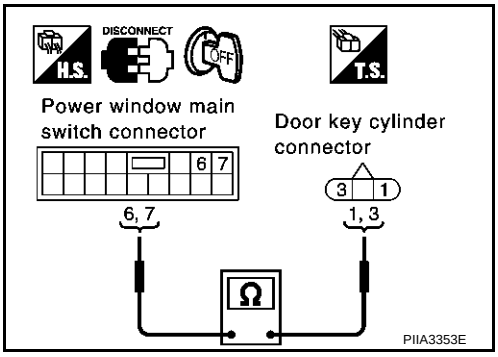

OK or NG

OK >> GO TO 3.
NG >> Repair or replace harness between power window main switch and door key cylinder switch.

3. CHECK DOOR KEY CYLINDER SWITCH GROUND CHECK

Check continuity between door key cylinder switch connector D12 terminal 2 and ground.

2 (B) – Ground :Continuity should exist.

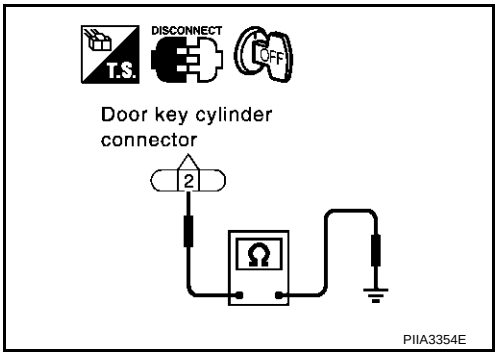

OK or NG

OK >> GO TO 4.
NG >> Repair or replace harness.

4. CHECK DOOR KEY CYLINDER SWITCH

Check continuity between door key cylinder switch terminal 1, 3 and 2.

Terminals		Key position	Continuity
1	2	Neutral/Lock	No
		Unlock	Yes
3		Neutral/Unlock	No
		Lock	Yes

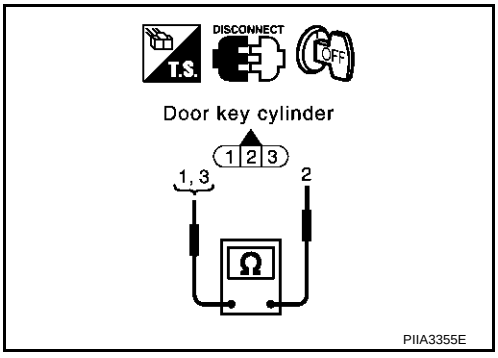

OK or NG

OK >> Further inspection is necessary. Refer to symptom chart.
NG >> Replace door key cylinder switch.

Back Door Opener Switch Check

AIS0013L

1. CHECK BACK DOOR OPENER SIGNAL

Check voltage between BCM connector and ground.
Press back door opener switch when driver side door is unlocked.

Terminals			Condition	Voltage (V) (Approx.)
(+)		(–)		
Connector	Terminal (Wire color)			
M3	76 (P)	Ground	Back door opener switch ON	0
			Back door opener switch OFF	Battery voltage*

*: When interior lamp battery saver control is in OFF. →Approx.5V

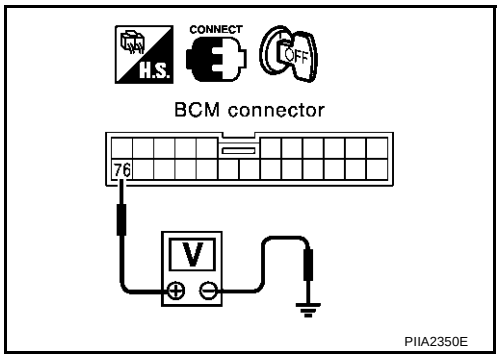

OK or NG

OK >> GO TO 2.
NG >> Replace BCM.

2. CHECK BACK DOOR OPENER SWITCH HARNESS

1. Turn ignition switch OFF.
2. Disconnect BCM and back door opener switch connector.
3. Check continuity between BCM connector M3 terminal 76 and back door opener switch connector T103 terminal 1.

76 (P) – 1 (P) :Continuity should exist.

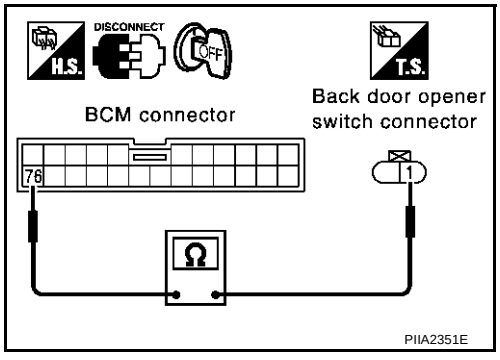

OK or NG

OK >> GO TO 3.
NG >> Repair or replace harness between BCM and back door opener switch.

3. CHECK BACK DOOR OPENER SWITCH

Check continuity between back door opener switch terminals 1 and 2.

Terminals		Condition	Continuity
1	2	Back door opener switch: ON	Yes
		Back door opener switch: OFF	No

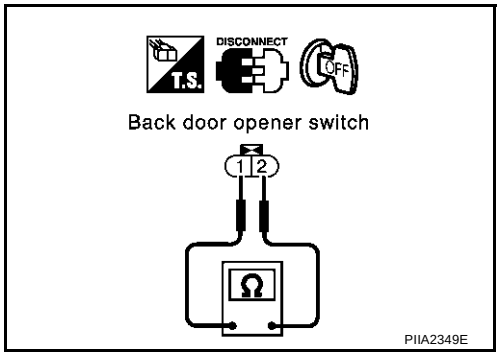

OK or NG

OK >> GO TO 4.
NG >> Replace back door opener switch.

4. CHECK DOOR LOCK ACTUATOR HARNESS

1. Disconnect driver side door lock actuator connector.
2. Check continuity between back door opener switch connector T103 terminal 2 and driver side door lock actuator connector D11 terminal 2.

2 (G) – 2 (OR) :Continuity should exist.

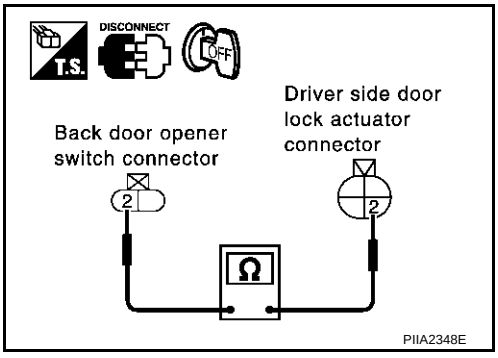

OK or NG

OK >> GO TO 5.
NG >> Repair or replace harness between back door opener switch and driver side door lock actuator.

5. CHECK DOOR LOCK ACTUATOR GROUND HARNESS

Check continuity between driver side door lock actuator connector D11 terminal 4 and ground.

4 (B) – Ground :Continuity should exist.

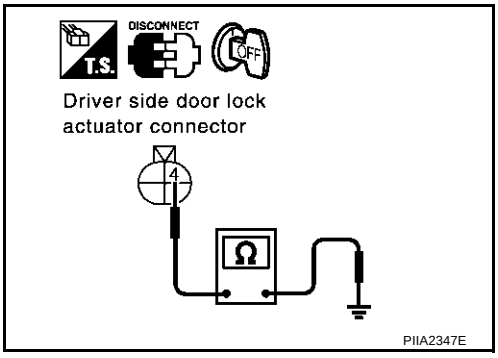

OK or NG

OK >> Replace driver side door lock actuator.
NG >> Repair or replace harness.

Back Door Opener Actuator Check

AIS0013O

1. CHECK BACK DOOR OPENER ACTUATOR SIGNAL

Check voltage between BCM connector and ground.
Press the back door opener switch when driver side door is unlocked.

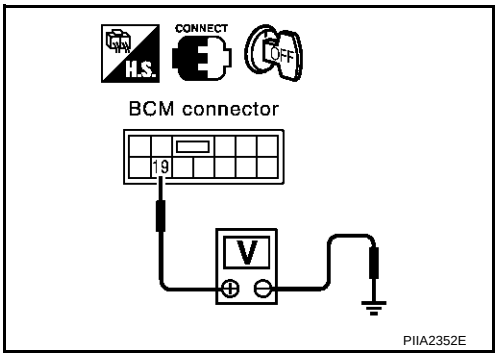

Terminals			Condition	Voltage (V) (Approx.)
(+)		(–)		
Connector	Terminal (Wire color)			
B4	19 (PU)	Ground	Back door opener switch ON	Battery voltage
			Back door opener switch OFF	0

OK or NG

OK >> GO TO 2.
NG >> Replace BCM.

2. CHECK BACK DOOR OPENER ACTUATOR HARNESS

1. Turn ignition switch OFF.
2. Disconnect BCM and back door opener actuator connector.
3. Check continuity between BCM connector B4 terminal 19 and back door opener actuator connector T11 terminal 1.

19 (PU) – 1 (PU) :Continuity should exist.

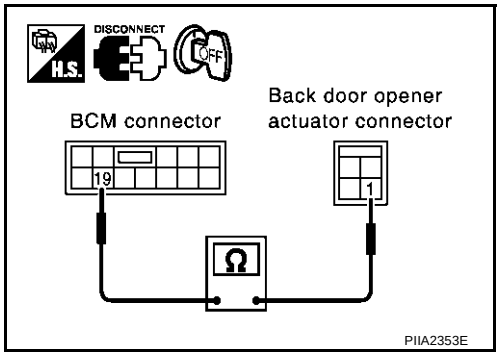

OK or NG

OK >> GO TO 3.
NG >> Repair or replace harness between BCM and back door opener actuator.

3. CHECK BACK DOOR OPENER ACTUATOR GROUND HARNESS

Check continuity between back door opener actuator connector T11 terminal 2 and ground.

2 (B) – Ground :Continuity should exist.

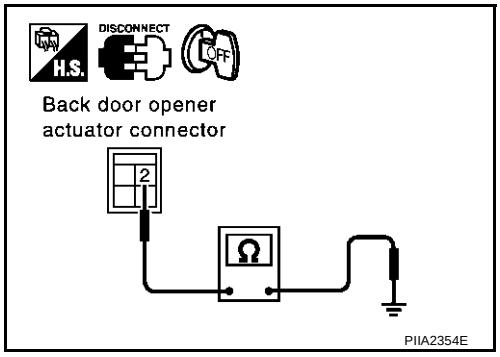

OK or NG

OK >> Replace back door opener actuator.
NG >> Repair or replace.

FUEL FILLER LID OPENER

PFP:78820

Wiring Diagram –F/LID–

AIS001O9

BL-F/LID-01

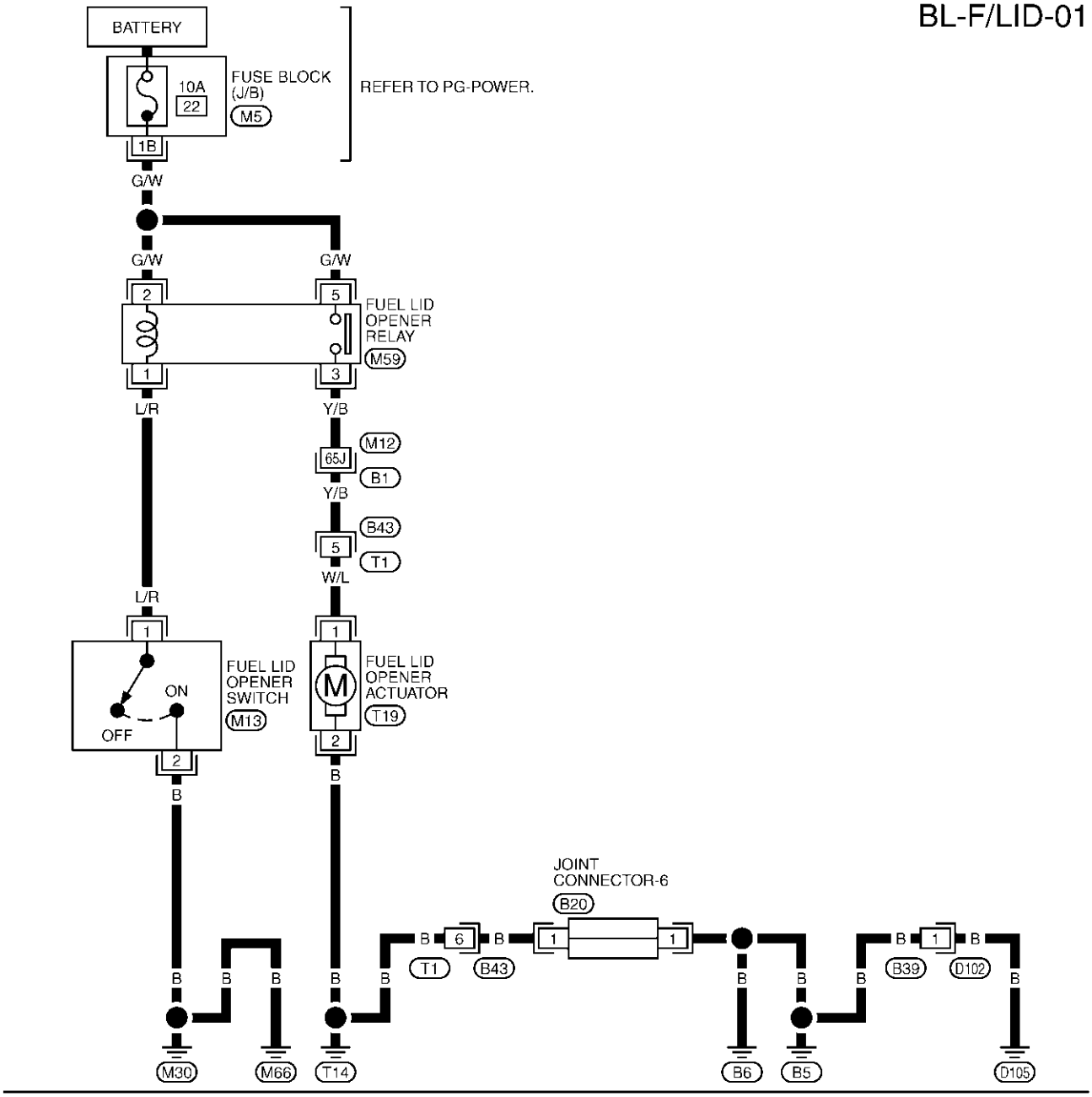

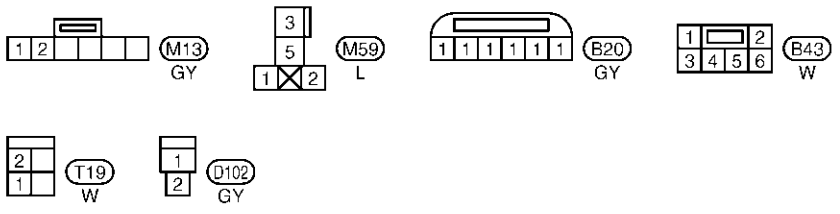

REFER TO THE FOLLOWING.

B1 -SUPER MULTIPLE JUNCTION (SMJ)

M5 -FUSE BLOCK-JUNCTION BOX (J/B)

TIWT0277E

REMOTE KEYLESS ENTRY SYSTEM

PFP:28596

Component Parts and Harness Connector Location

AIS000CK

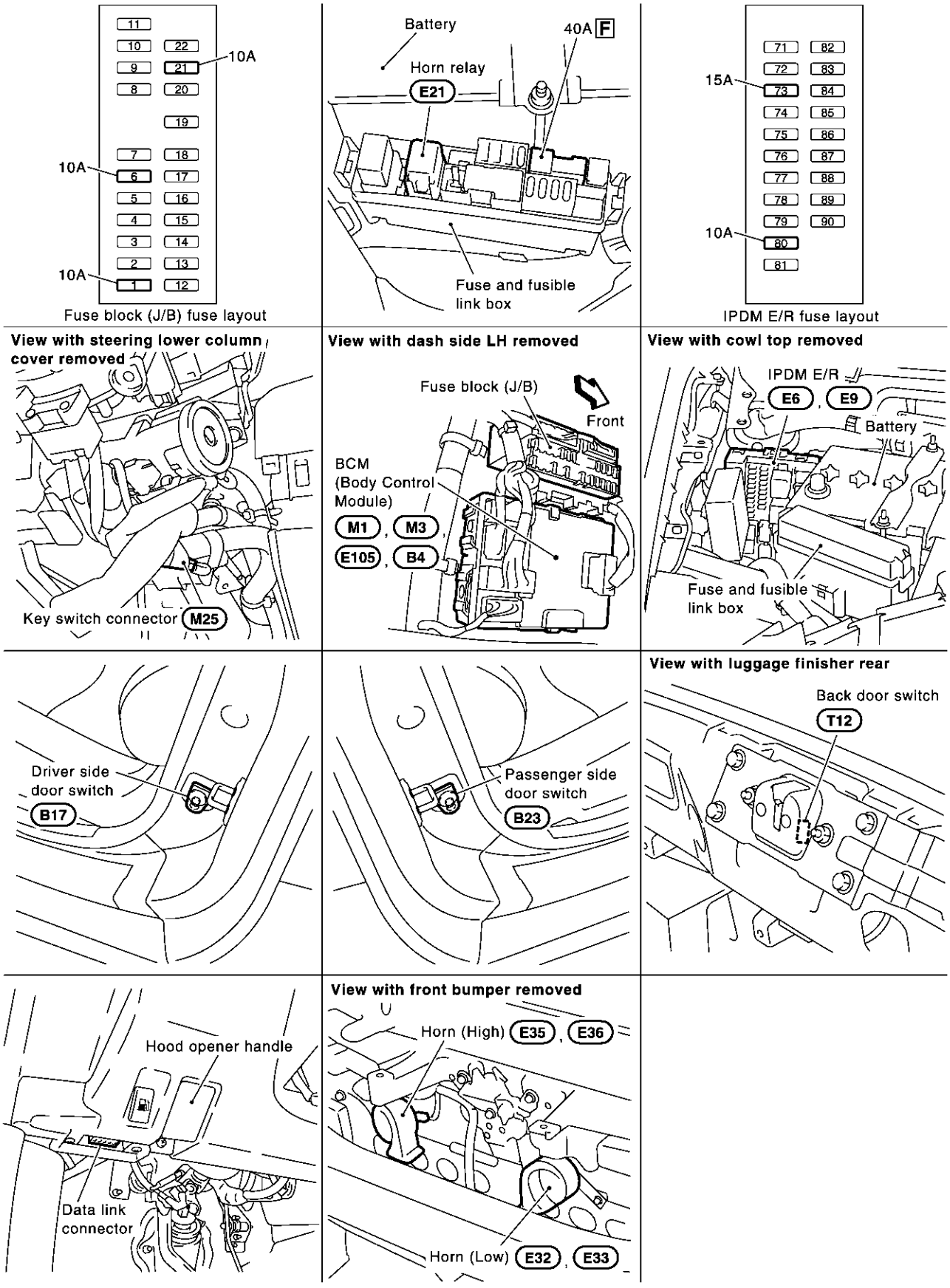

PIIA2509E

System Description

AIS000CL

INPUTS

Power is supplied at all times

- to BCM terminal 7
- through 40A fusible link (letter **F** , located in the fuse and fusible link box).
- to key switch terminal 2
- through 10A fuse (No.21,located in the fuse and fusible link box).

When the ignition switch is ON, power is supplied

- to BCM terminal 35
- through 10A fuse [No.1,located in the fuse block (J/B)].

When the ignition switch is ACC, power is supplied

- to BCM terminal 36
- through 10A fuse [No.6,located in the fuse block (J/B)].

When the driver side door switch is ON (door is OPEN), ground is supplied

- to BCM terminal 14
- through driver side door switch terminal 1
- to driver door switch case ground.

When the passenger side door switch is ON (door is OPEN), ground is supplied

- to BCM terminal 10
- through passenger side door switch terminal 1
- to passenger side door switch case ground.

When the back door switch is ON (door is OPEN), ground is supplied

- to BCM terminal 18
- through the back door switch terminal 1 and 3
- to body grounds B5,B6,D105 and T14.

When the key switch is ON (key is inserted in ignition key cylinder), power is supplied

- through key switch terminal 1
- to BCM terminal 1.

Key fob signal is inputted to BCM (the antenna of the system is combined with BCM).
The remote keyless entry system controls operation of the

- power door lock
- hazard and horn reminder
- auto door lock
- interior lamp and step lamp
- panic alarm
- back door opener
- keyless power window down (open)

OPERATED PROCEDURE

Power Door Lock Operation

BCM receives a LOCK signal from key fob. BCM locks all doors with input of LOCK signal from key fob.
When an UNLOCK signal is sent from key fob once, driver's door will be unlocked.
Then, if an UNLOCK signal is sent from key fob again within 5 seconds, all other door will be unlocked.

Hazard Reminder

When the doors are locked or unlocked by key fob, supply power to hazard warning lamp flashes as follows

- LOCK operation: C mode (flash twice) or S mode (flash twice)
- UNLOCK operation: C mode (flash once) or S mode (does not flash)

Horn Reminder

BCM output to IPDM E/R for horn reminder signal as DATA LINE (CAN H line and CAN L line).
The horn reminder has C mode (horn chirp mode) and S mode (non-horn chirp mode).

Operating function of hazard and horn reminder

	C mode		S mode	
Remote controller operation	Lock	Unlock	Lock	Unlock
Hazard warning lamp flash	Twice	Once	Twice	—
Horn sound	Once	—	—	—

Hazard and horn reminder does not operate if any door switches are ON (any doors are OPEN).

How to change hazard and horn reminder mode

With CONSULT-II

Hazard and horn reminder can be changed using “WORK SUPPORT” mode in “MULTI ANSWER BACK SET”.
Refer to BL-66, "Work Support" .

Without CONSULT-II

When LOCK and UNLOCK signals are sent from the key fob for more than 2 seconds at the same time, the hazard and horn reminder mode is changed and hazard warning lamp flashes and horn sounds as follows:

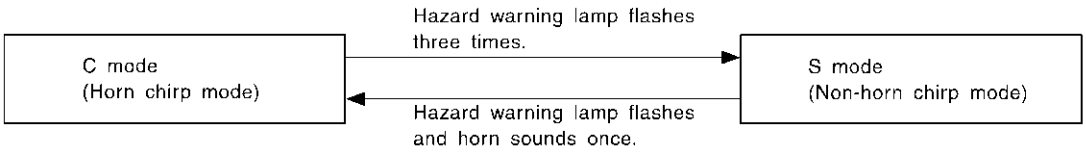

SEL153WA

Auto Door Lock Operation

Auto lock function signal is sent for operation when any of the following signals are not sent within 1 minute after the unlock signal is sent from the key fob:

- when door switch is turned ON for open.
- when the key switch is turned ON.
- when the lock signal is sent from the key fob.

Auto door lock mode can be changed using “WORK SUPPORT” mode in “AUTO LOCK SET”.
Refer to BL-66, "Work Support" .

Interior Lamp and Step Lamp Operation

When the following conditions come:

- condition of interior lamp switch is DOOR position;
- door switch OFF (when all the doors are closed);

Remote keyless entry system turns on interior lamp (for 30 seconds) with input of UNLOCK signal from key fob.
For detailed description, refer to LT-210, "SPOT LAMP TIMER OPERATION" .

Panic Alarm Operation

When key switch is OFF (when ignition key is not inserted in key cylinder), BCM turns on and off horn and headlamp intermittently with input of PANIC ALARM signal from key fob.
The alarm automatically turns off after 25 seconds or when BCM receives any signal from key fob.
For detailed description, refer to BL-94, "PANIC ALARM OPERATION" .

Back Door Opener Operation

When a BACK DOOR OPEN signal is sent with key OFF (ignition key removed from key cylinder) from key fob, power is supplied through BCM terminal 19.
When power and ground are supplied, back door opener actuator opens back door.

Keyless Power Window Down (open) Operation

When key fob unlock switch is turned ON with ignition switch OFF, and key fob unlock switch is detected to be on continuously for 3 seconds, the driver's door and passenger's door power windows are simultaneously opened.
Power window is operated to open and the operation continues as long as the key fob unlock switch is pressed.

CAN Communication System Description

AIS001O4

CAN (Controller Area Network) is a serial communication line for real time application. It is an on-vehicle multiplex communication line with high data communication speed and excellent error detection ability. Many electronic control units are equipped onto a vehicle, and each control unit shares information and links with other control units during operation (not independent). In CAN communication, control units are connected with 2 communication lines (CAN H line, CAN L line) allowing a high rate of information transmission with less wiring. Each control unit transmits/receives data but selectively reads required data only.

Body type	Coupe						
Axle	2WD						
Engine	VQ35DE						
Transmission	A/T	M/T					
Brake control	TCS	ABS		TCS		VDC	
Low tire pressure warning system	Not applicable	Not applicable	Applicable	Not applicable	Applicable	Not applicable	Applicable
CAN communication unit							
ECM	×	×	×	×	×	×	×
TCM	×						
Data link connector	×	×	×	×	×	×	×
Unified meter and A/C amp.	×	×	×	×	×	×	×
BCM	×	×	×	×	×	×	×
Low tire pressure warning control unit			×		×		×
Steering angle sensor						×	×
ABS actuator and electric unit (control unit)	×	×	×	×	×		
VDC/TCS/ABS control unit						×	×
IPDM E/R	×	×	×	×	×	×	×
CAN communication type	BL-51, "TYPE 1"	BL-53, "TYPE 2/ TYPE3"		BL-55, "TYPE 4/ TYPE5"		BL-56, "TYPE 6/ TYPE7"	

×: Applicable

TYPE 1

System diagram

- Type1

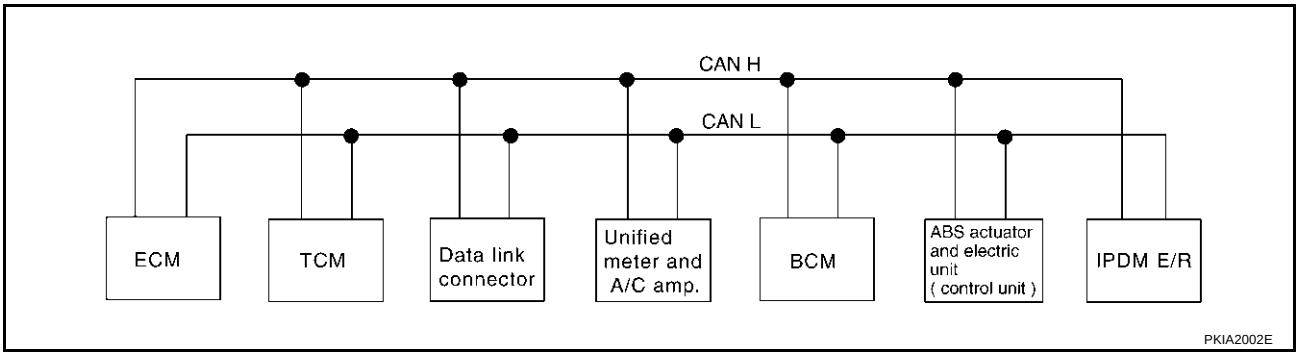

Input/output signal chart

T: Transmit R: Receive

Signals	ECM	TCM	Unified meter and A/C amp.	BCM	ABS actuator and electric unit (control unit)	IPDM E/R
Engine speed signal	T	R	R		R	
Engine torque signal	T	R			R	
Engine coolant temperature signal	T	R	R			
Accelerator pedal position signal	T	R			R	
Closed throttle position signal	T	R				
Wide open throttle position signal	T	R				
Battery voltage signal	T	R				
Stop lamp switch signal		R	T			
Fuel consumption monitor signal	T		R			
A/T self-diagnosis signal	R	T				
A/T CHECK indicator lamp signal		T	R			
A/T position indicator signal		T	R		R	
Manual mode gear position signal		T	R			
ABS operation signal		R			T	
A/T shift schedule change demand signal		R			T	
A/C switch signal	R			T		
A/C compressor request signal	T					R
A/C compressor feedback signal	T		R			
Blower fan motor switch signal	R			T		
Cooling fan speed request signal	T					R
Position lights request signal			R	T		R
Low beam request signal				T		R
Low beam status signal	R					T
High beam request signal			R	T		R
High beam status signal	R					T
Vehicle speed signal			R		T	
	R	R	T	R		
Sleep request 1 signal			R	T		
Sleep request 2 signal				T		R
Wake up request 1 signal			R	T		
Door switch signal			R	T		R
Turn indicator signal			R	T		
Seat belt buckle switch signal			T	R		
Buzzer output signal			R	T		
Fuel level sensor signal	R		T			
Malfunction indicator lamp signal	T		R			
ASCD SET lamp signal	T		R			
ASCD operation signal	T	R				
ASCD CRUISE lamp signal	T		R			
ASCD OD cancel request signal	T	R				

Signals	ECM	TCM	Unified meter and A/C amp.	BCM	ABS actuator and electric unit (control unit)	IPDM E/R
Output shaft revolution signal	R	T				
Turbine revolution signal	R	T				
Front wiper request signal				T		R
Front wiper stop position signal				R		T
Rear window defogger switch signal				T		R
Rear window defogger control signal	R					T
Manual mode signal		R	T			
Not manual mode signal		R	T			
Manual mode shift up signal		R	T			
Manual mode shift down signal		R	T			
Manual mode indicator signal		T	R			
Hood switch signal				R		T
Theft warning horn request signal				T		R
Horn chirp signal				T		R
ABS warning lamp signal			R		T	
TCS OFF indicator lamp signal			R		T	
SLIP indicator lamp signal			R		T	
Brake warning lamp signal			R		T	

TYPE 2/TYPE3

System diagram

- Type2

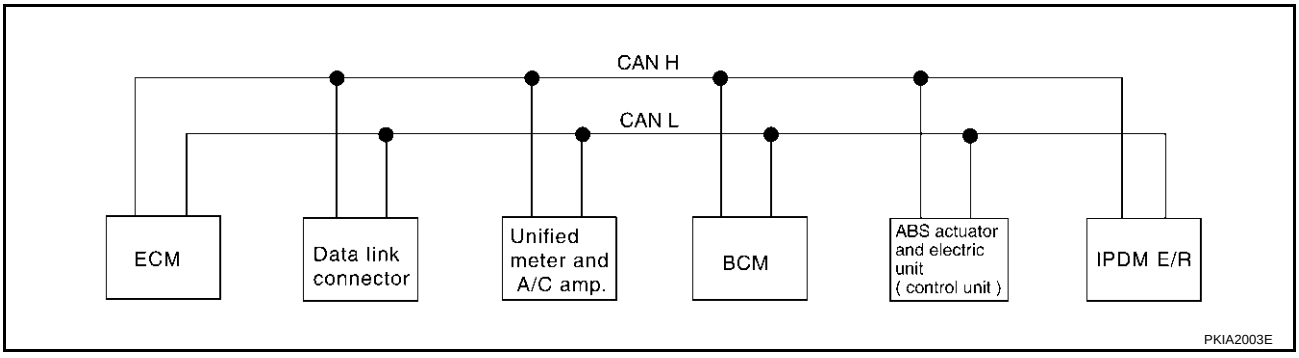

- Type3

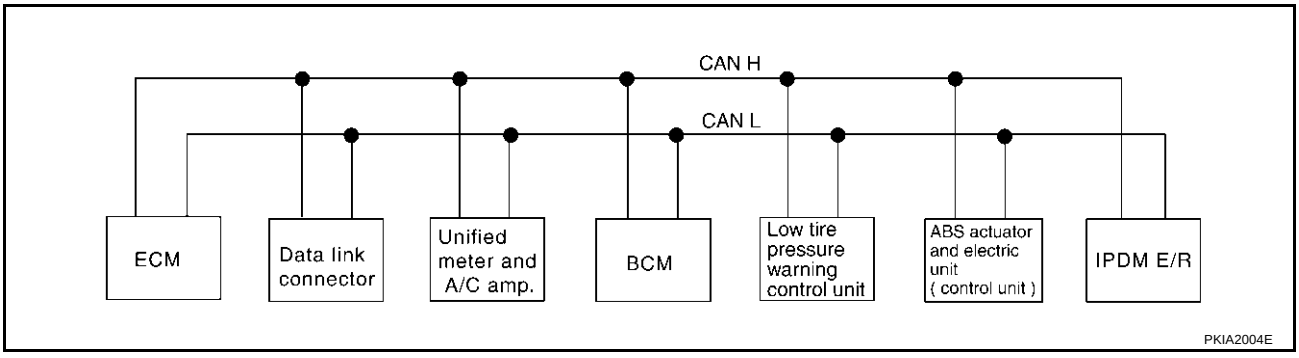

Input/output signal chart

T: Transmit R: Receive

Signals	ECM	Unified meter and A/C amp.	BCM	Low tire pressure warning control unit	ABS actuator and electric unit (control unit)	IPDM E/R
Engine speed signal	T	R			R	
Engine coolant temperature signal	T	R				
Accelerator pedal position signal	T				R	
Fuel consumption monitor signal	T	R				
A/Cswitch signal	R		T			
A/C compressor request signal	T					R
A/C compressor feedback signal	T	R				
Blower fan motor switch signal	R		T			
Cooling fan speed request signal	T					R
Position lights request signal			R	T		R
Low beam request signal			T			R
Low beam status signal	R					T
High beam request signal		R	T			R
High beam status signal	R					T
Vehicle speed signal		R			T	
	R	T	R	R		
Sleep request 1 signal		R	T			
Sleep request 2 signal			T			R
Wake up request 1 signal		R	T			
Door switch signal		R	T			R
Turn indicator signal		R	T			
Seat belt buckle switch signal		T	R			
Buzzer output signal		R	T			
Fuel level sensor signal	R	T				
Malfunction indicator lamp signal	T	R				
ASCD SET lamp signal	T	R				
ASCD CRUISE lamp signal	T	R				
Front wiper request signal			T			R
Front wiper stop position signal			R			T
Rear window defogger switch signal			T			R
Rear window defogger control signal	R					T
Hood switch signal			R			T
Theft warning horn request signal			T			R
Horn chirp signal			T			R
Tire pressure signal		R		T		
ABS warning lamp signal		R			T	
Brake warning lamp signal		R			T	

TYPE 4/TYPE5

System diagram

- Type4

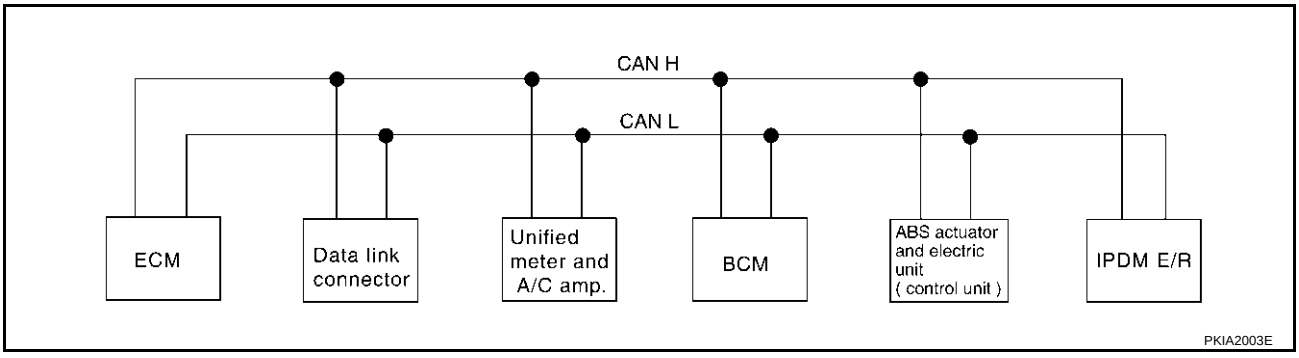

- Type5

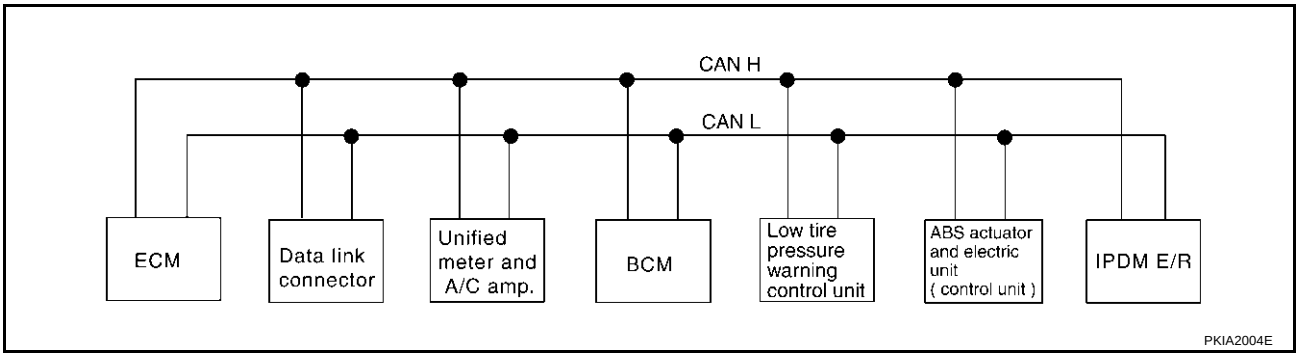

Input/output signal chart

T: Transmit R: Receive

Signals	ECM	Unified meter and A/C amp.	BCM	Low tire pressure warning control unit	ABS actuator and electric unit (control unit)	IPDM E/R
Engine speed signal	T	R			R	
Engine torque signal	T				R	
Engine coolant temperature signal	T	R				
Accelerator pedal position signal	T				R	
Fuel consumption monitor signal	T	R				
A/C switch signal	R		T			
A/C compressor request signal	T					R
A/C compressor feedback signal	T	R				
Blower fan motor switch signal	R		T			
Cooling fan speed request signal	T					R
Position lights request signal		R	T			R
Low beam request signal			T			R
Low beam status signal	R					T
High beam request signal		R	T			R
High beam status signal	R					T
Vehicle speed signal		R			T	
	R	T	R	R		
Sleep request 1 signal		R	T			
Sleep request 2 signal			T			R

Signals	ECM	Unified meter and A/C amp.	BCM	Low tire pressure warning control unit	ABS actuator and electric unit (control unit)	IPDM E/R
Wake up request 1 signal		R	T			
Door switch signal		R	T			R
Turn indicator signal		R	T			
Seat belt buckle switch signal		T	R			
Buzzer output signal		R	T			
Fuel level sensor signal	R	T				
Malfunction indicator lamp signal	T	R				
ASCD SET lamp signal	T	R				
ASCD CRUISE lamp signal	T	R				
Front wiper request signal			T			R
Front wiper stop position signal			R			T
Rear window defogger switch signal			T			R
Rear window defogger control signal	R					T
Hood switch signal			R			T
Theft warning horn request signal			T			R
Horn chirp signal			T			R
Tire pressure signal		R		T		
ABS warning lamp signal		R			T	
TCS OFF indicator lamp signal		R			T	
SLIP indicator lamp signal		R			T	
Brake warning lamp signal		R			T	

TYPE 6/TYPE7

System diagram

- Type6

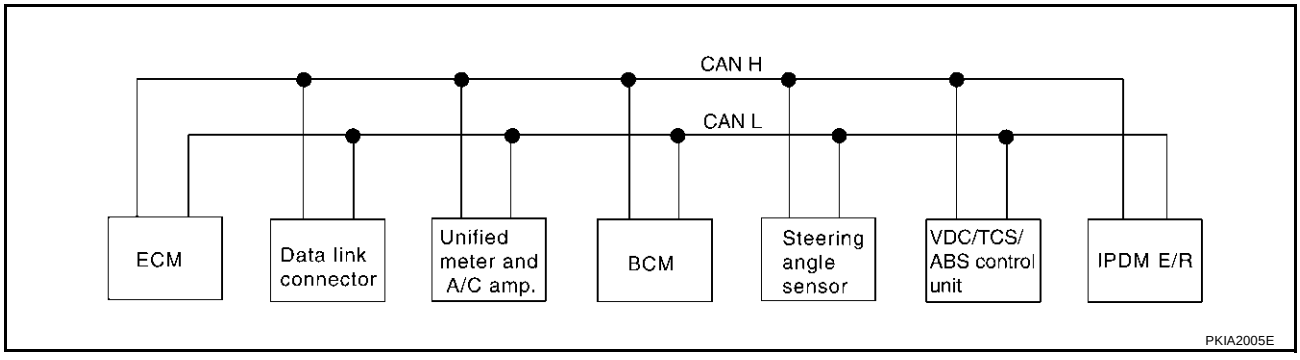

- Type7

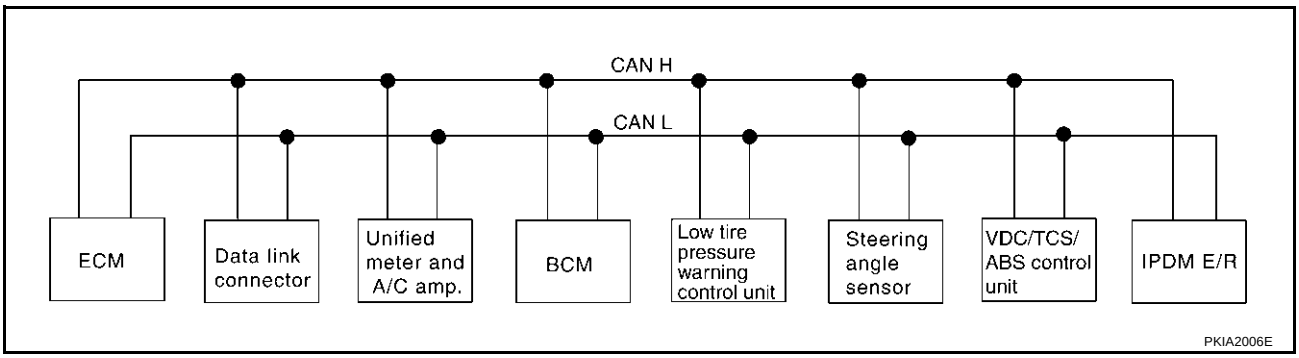

Input/output signal chart

T: Transmit R: Receive

Signals	ECM	Unified meter and A/C amp.	BCM	Low tire pressure warning control unit	Steering angle sensor	VDC/TCS/ ABS control unit	IPDM E/R
Engine speed signal	T	R				R	
Engine torque signal	T					R	
Engine coolant temperature signal	T	R					
Accelerator pedal position signal	T					R	
Fuel consumption monitor signal	T	R					
A/C switch signal	R		T				
A/C compressor request signal	T						R
A/C compressor feedback signal	T	R					
Blower fan motor switch signal	R		T				
Cooling fan speed request signal	T						R
Position lights request signal		R	T				R
Low beam request signal			T				R
Low beam status signal	R						T
High beam request signal		R	T				R
High beam status signal	R						T
Vehicle speed signal		R				T	
	R	T	R	R			
Sleep request 1 signal		R	T				
Sleep request 2 signal			T				R
Wake up request 1 signal		R	T				
Door switch signal		R	T				R
Turn indicator signal		R	T				
Seat belt buckle switch signal		T	R				
Buzzer output signal		R	T				
Fuel level sensor signal	R	T					
Malfunction indicator signal	T	R					
ASCD SET lamp signal	T	R					
ASCD CRUISE lamp signal	T	R					
Front wiper request signal			T				R
Front wiper stop position signal			R				T
Rear window defogger switch signal			T				R

Signals	ECM	Unified meter and A/C amp.	BCM	Low tire pressure warning control unit	Steering angle sensor	VDC/TCS/ ABS control unit	IPDM E/R
Rear window defogger control signal	R						T
Hood switch signal			R				T
Theft warning horn request signal			T				R
Horn chirp signal			T				R
Steering angle sensor signal					T	R	
Tire pressure signal		R		T			
ABS warning lamp signal		R				T	
VDC OFF indicator lamp signal		R				T	
SLIP indicator lamp signal		R				T	
Brake warning lamp signal		R				T	

Schematic

AIS000CN

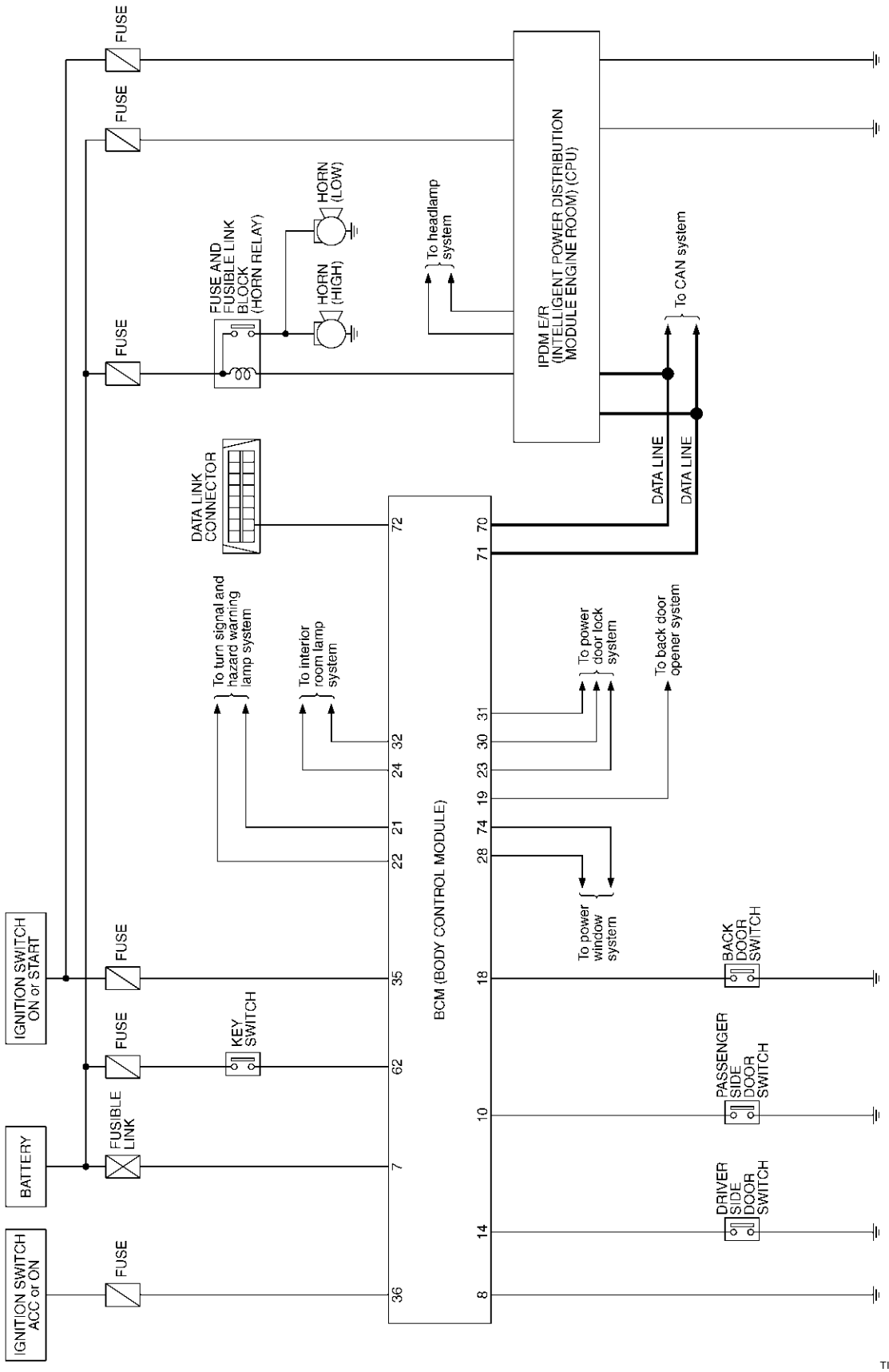

TIWT0273E

Wiring Diagram — KEYLES—

AIS000CO

FIG. 1

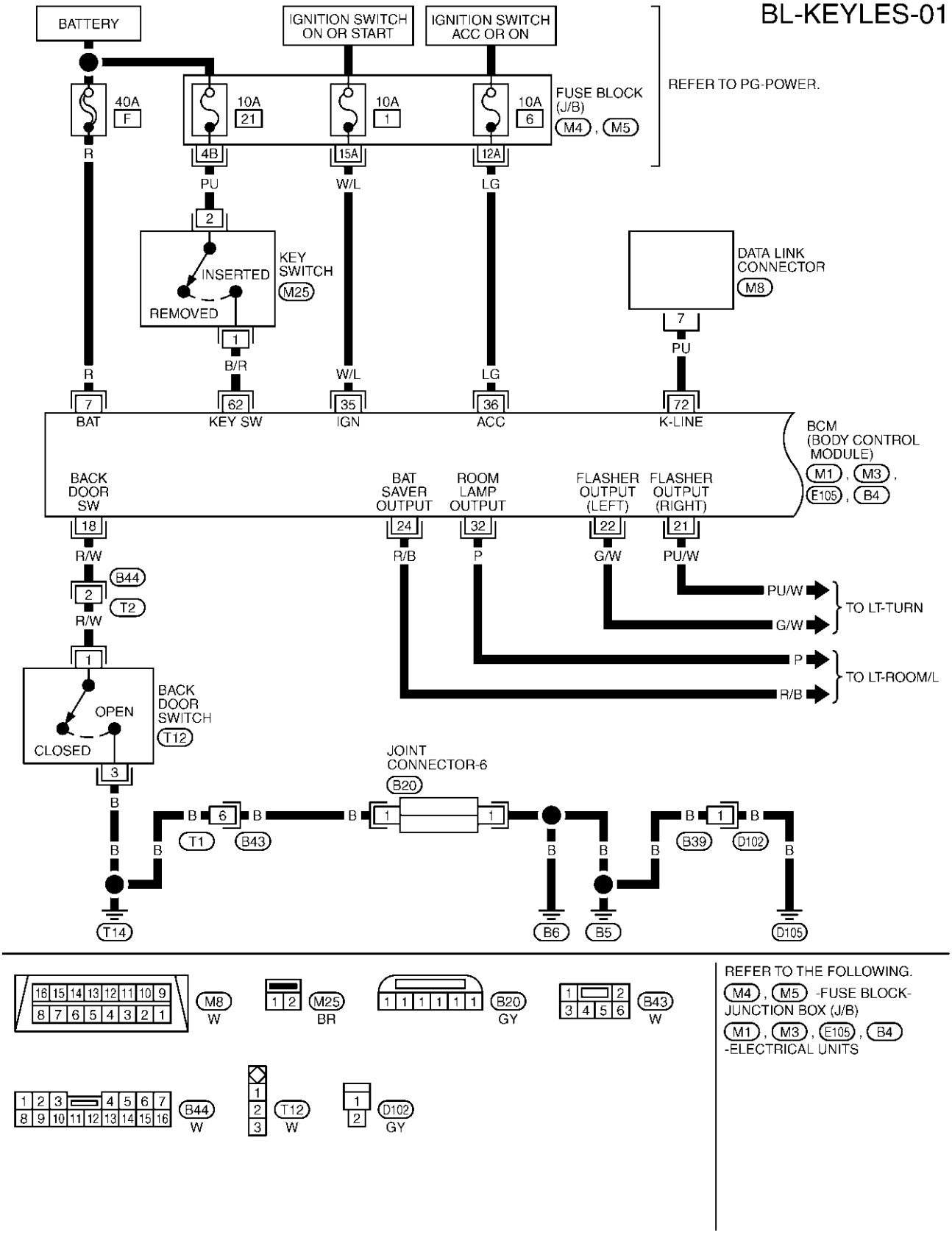

FIG. 2

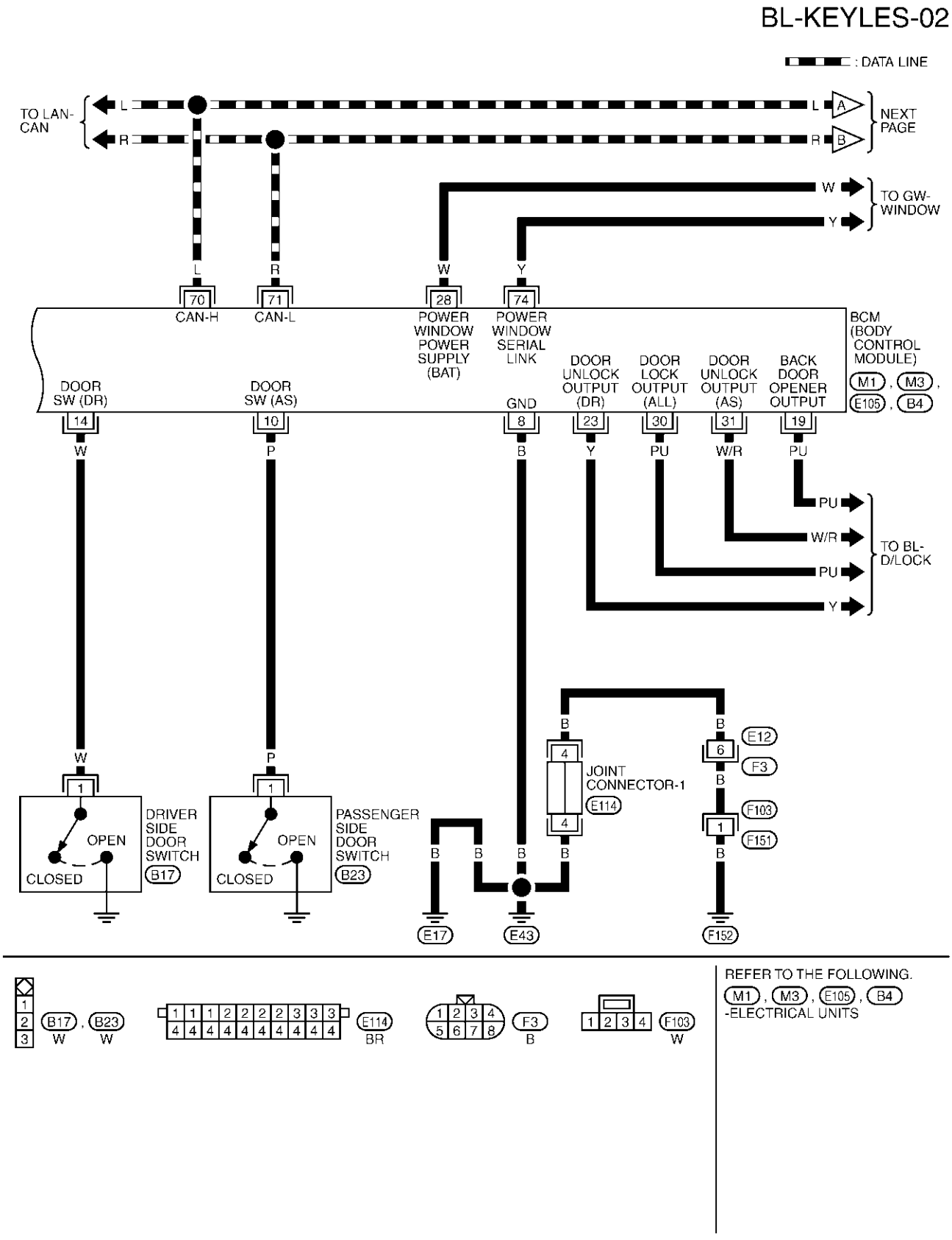
BL-KEYLES-02
: DATA LINE
TO LAN-CAN
L
R
NEXT PAGE
TO GW-WINDOW
W
Y
70
71
28
74
CAN-H
CAN-L
POWER WINDOW POWER SUPPLY (BAT)
POWER WINDOW SERIAL LINK
BCM (BODY CONTROL MODULE)
M1, M3, E105, B4
DOOR SW (DR)
DOOR SW (AS)
GND
DOOR UNLOCK OUTPUT (DR)
DOOR LOCK OUTPUT (ALL)
DOOR UNLOCK OUTPUT (AS)
BACK DOOR OPENER OUTPUT
14
10
8
23
30
31
19
PU
W/R
TO BL-D/LOCK
DRIVER SIDE DOOR SWITCH
B17
PASSENGER SIDE DOOR SWITCH
B23
OPEN
CLOSED
JOINT CONNECTOR-1
E114
E12
F3
F103
F151
E17
E43
F152
REFER TO THE FOLLOWING.
M1, M3, E105, B4
-ELECTRICAL UNITS
TIWT0275E

FIG. 3

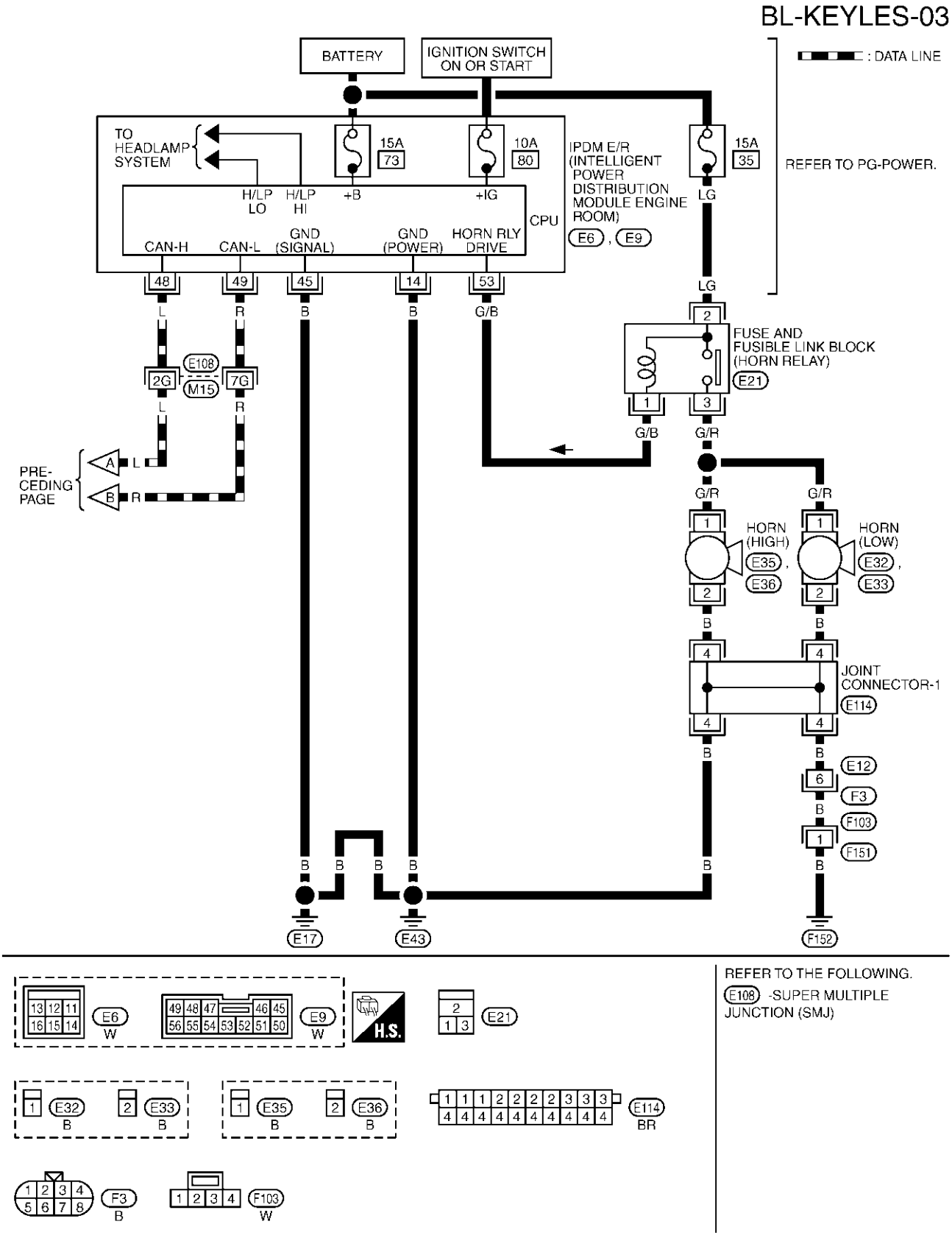
BL-KEYLES-03
BATTERY
IGNITION SWITCH ON OR START
: DATA LINE
TO HEADLAMP SYSTEM
15A 73
10A 80
15A 35
IPDM E/R (INTELLIGENT POWER DISTRIBUTION MODULE ENGINE ROOM)
E6 , E9
REFER TO PG-POWER.
H/LP LO
H/LP HI
+B
+IG
CPU
CAN-H
CAN-L
GND (SIGNAL)
GND (POWER)
HORN RLY DRIVE
48
49
45
14
53
L
R
B
B
G/B
LG
FUSE AND FUSIBLE LINK BLOCK (HORN RELAY)
E21
E108
M15
2G
7G
G/B
G/R
PRE-CEDING PAGE
A
B
G/R
HORN (HIGH)
E35 , E36
HORN (LOW)
E32 , E33
JOINT CONNECTOR-1
E114
E12
F3
F103
F151
E17
E43
F152
REFER TO THE FOLLOWING.
E108 -SUPER MULTIPLE JUNCTION (SMJ)
E6
W
E9
W
H.S.
E21
E32
B
E33
B
E35
B
E36
B
E114
BR
F3
B
F103
W
TIWT0276E

Terminals and Reference Value for BCM

AIS000CP

TERMINAL	WIRE COLOR	ITEM	CONDITION	VOLTAGE
7	R	Power source (Fusible link)	—	Battery voltage
8	B	Ground	—	0V
10	P	Passenger side door switch	ON (Open) → OFF (Closed)	0V → Approx. 5V
14	W	Driver side door switch	ON (Open) → OFF (Closed)	0V → Approx. 5V
18	R/W	Back door switch	ON (Open) → OFF (Closed)	0V →Battery voltage*1
19	PU	Back door lock actuator	Locked (OFF) → Unlocked (ON)	0V → Battery voltage
21	PU/W	Right turn signal lamp	When door lock or unlock is operated using key fob*2 (ON → OFF)	Battery voltage → 0V
22	G/W	Left turn signal lamp	When door lock or unlock is operated using key fob*2 (ON → OFF)	Battery voltage → 0V
23	Y	Driver side door lock actuator (Unlock)	Door lock / unlock switch (Free → Unlock)	0V → Battery voltage
28	W	Battery power supply	—	Battery voltage
30	PU	Door lock actuators	Door lock / unlock switch (Free → Lock)	0V → Battery voltage
31	W/R	Passenger side door lock actuator	Door lock / unlock switch (Free → Unlock)	0V → Battery voltage
35	W/L	Ignition switch (ON or START)	Ignition switch (ON or START position)	Battery voltage
36	LG	ACC power supply (ACC or ON)	Ignition switch (ACC position)	Battery voltage
62	B/R	Ignition key switch (Insert)	ON (Key inserted) → OFF (Key removed from IGN key cylinder)	Battery voltage → 0V
70	L	CAN – H	—	—
71	R	CAN – L	—	—
72	PU	Data link connector	—	—
74	Y	Power window switch (Serial link)	Driver side door and passenger side door are closed. (Each door switches are OFF.)	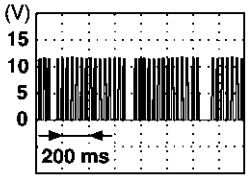 PIIA2344J

*1 : When interior lamp battery saver control is in OFF. →Approx.5

*2 : In the state that hazard reminder operates.

Terminals and Reference Value for IPDM E/R

AIS001MF

TERMINAL	WIRE COLOR	ITEM	CONDITION	VOLTAGE
14	B	Ground	—	0V
45	B	Ground	—	0V
48	L	CAN – H	—	0V

TERMINAL	WIRE COLOR	ITEM	CONDITION	VOLTAGE
49	R	CAN – L	—	0V
53	G/B	Horn relay	When door lock is operated using key fob* (ON → OFF)	Battery voltage → 0V

*: In the state that horn reminder operates.

CONSULT-II Function

AIS000CQ

- The following functions are executed by combining data received and command transmitted via the communication line from the BCM.

BCM diagnosis position	Inspection items and diagnosis mode		Description
BCM C/U*	Self-diagnosis results		Carries out the self-diagnosis.
	Date monitor	Selection from menu	Displays the input data to BCM on real-time basis.
	CAN diagnostic support monitor		The results transmit / receive diagnosis of CAN communication can be read.
MULTI REMOTE ENT	Data monitor		Displays the input remote keyless entry system data to BCM on real–time basis.
	Active test		Gives a drive to a load to check the operation.
	Work support		Changes the setting for each function.

*:Refer to BCS-18, "CAN Communication Inspection Using CONSULT-II (Self-Diagnosis)" .

CONSULT-II Inspection Procedure

AIS000CR

CAUTION:

If CONSULT-II is used with no connection of CONSULT-II CONVERTER, malfunctions might be detected in self-diagnosis depending on control unit which carry out CAN communication.

“MULTI REMOTE ENT”

1. Turn ignition switch “OFF”.
2. Connect “CONSULT-II” and “CONSULT-II CONVERTER” to the data link connector.

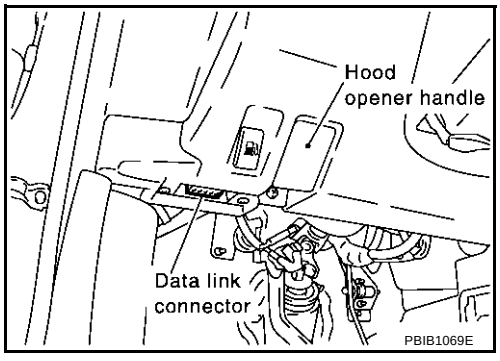

3. Turn ignition switch “ON”.
4. Touch “START(NISSAN BASED VHCL)”.

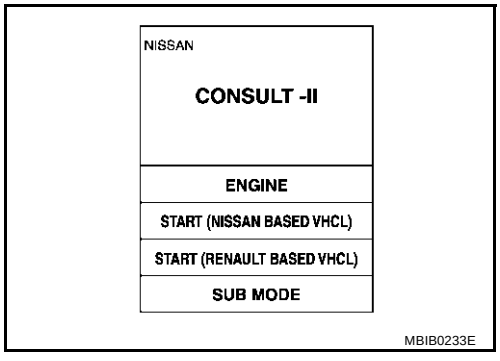

5. Touch “BCM”.
If “BCM” is not indicated, go to GI-39, "CONSULT-II Data Link Connector (DLC) Circuit" .

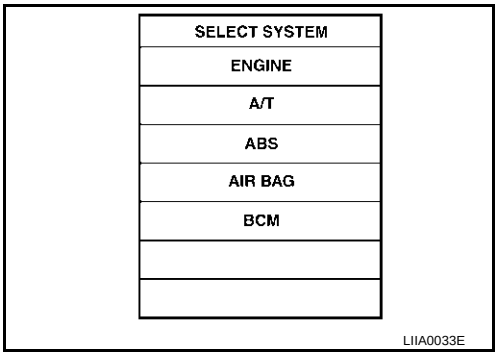

6. Touch “MULTI REMOTE ENT”.

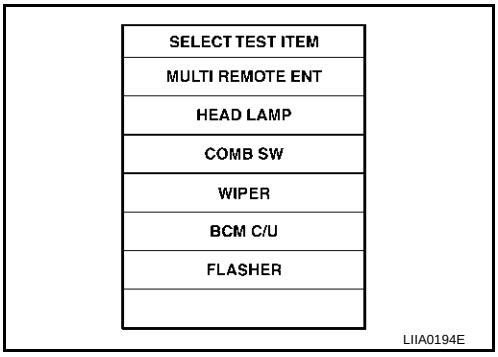

7. Select diagnosis mode.
“DATA MONITOR”, “ACTIVE TEST” and “WORK SUPPORT” are available.

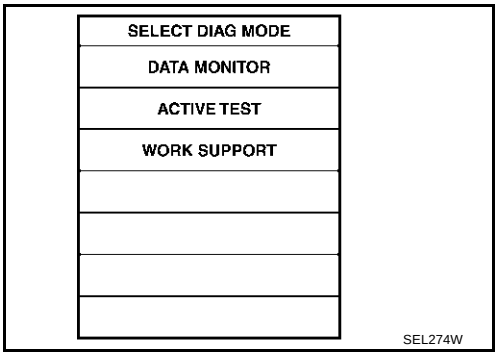

CONSULT-II Application Items

AIS000CS

“MULTI REMOTE CONTENT”

Data Monitor

Monitored Item	Description
IGN ON SW	Indicates [ON/OFF] condition of ignition switch in ON position.
ACC ON SW	Indicates [ON/OFF] condition of ignition switch in ACC position.
KEY ON SW	Indicates [ON/OFF] condition of key switch.
DOOR SW-DR	Indicates [ON/OFF] condition of driver side door switch.
DOOR SW-AS	Indicates [ON/OFF] condition of passenger side door switch.
BACK DOOR SW	Indicates [ON/OFF] condition of back door switch.
LOCK SW DR/AS	Indicates [ON/OFF] condition of lock signal from lock/unlock switch.
UNLK SW DR/AS	Indicates [ON/OFF] condition of unlock signal from lock/unlock switch.
KEY CYL LK SW	Indicates [ON/OFF] condition of lock signal from door key cylinder switch.
LK BUTTON/SIG	Indicates [ON/OFF] condition of lock signal from key fob.
UN BUTTON/SIG	Indicates [ON/OFF] condition of unlock signal from key fob.
PANIC BTN	Indicates [ON/OFF] condition of panic signal from key fob.
TRUNK BTN/SIG	Indicates [ON/OFF] condition of back door open signal from key fob.
TRUNK OPN MNTR	This is displayed even when it is not equipped.

Monitored Item	Description
UN BUTTON ON	Indicates [ON/OFF] condition of unlock signal from key fob.
LK/UN BTN ON	Indicates [ON/OFF] condition of lock/unlock signal at the same time from key fob.
DOOR SW-RR	This is displayed even when it is not equipped.

Active Test

Test Item	Description
INT LAMP	This test is able to check interior lamp operation. The interior lamp is turned on when “ON” on CONSULT-II screen is touched.
IGN ILLUM	This is displayed even when it is not equipped.
TRUNK/BACK DOOR	This test is able to check back door opener actuator operation. The back door is unlocked when “ON” on CONSULT-II screen is touched.
HORN	This test is able to check panic alarm and horn reminder operations. The horn activate for 0.02 seconds after “ON” on CONSULT-II screen is touched.
HEAD LAMP(HI)	This test is able to check headlamps panic alarm operation. The headlamp illuminates for 0.5 seconds after “ON” on CONSULT-II screen is touched.
POWER WINDOW DOWN	This test is able to check power window open operation. The front power windows activate for 10 seconds after “ON” or CONSULT-II screen is touched.
FLASHER RIGHT	This test is able to check hazard reminder operation. The right hazard lamp turns on when “ON” on CONSULT-II screen is touched.
FLASHER LEFT	This test is able to check hazard reminder operation. The left hazard lamp turns on when “ON” on CONSULT-II screen is touched.
FLASHER RIGHT (CAN)	This test is able to check hazard reminder operation. The right hazard indicator lamp turns on when “ON” on CONSULT-II screen is touched.
FLASHER LEFT (CAN)	This test is able to check hazard reminder operation. The left hazard indicator lamp turns on when “ON” on CONSULT-II screen is touched.

Work Support

Test Item	Description
REMO CONT ID CONFIR	It can be checked whether key fob ID code is registered or not in this mode.
REMO CONT ID REGIST	Key fob ID code can be registered.
REMO CONT ID ERASUR	Key fob ID code can be erased.
MULTI ANSWER BACK SET	Hazard and horn reminder mode can be changed in this mode. The reminder mode will be changed when “MODE SET” on CONSULT-II screen is touched.
AUTO LOCK SET	Auto locking function mode can be changed in this mode. The function mode will be changed when “MODE SET” on CONSULT-II screen is touched.
PANIC ALRM SET	Panic alarm operation mode can be changed in this mode. The operation mode will be changed when “MODE SET” on CONSULT-II screen is touched.
TRUNK OPEN SET	Trunk lid opener operation mode can be changed in this mode. The operation mode will be changed when “MODE SET” on CONSULT-II screen is touched.
PW DOWN SET	Keyless power window down (open) operation mode can be changed in this mode. The operation mode will be changed when“MODE SET” on CONSULT-II screen is touched.

Hazard and horn reminder mode

	ON (C mode)		OFF (S mode)		MODE 3		MODE 4		MODE 5		MODE 6	
Key fob operation	Lock	Unlock	Lock	Unlock	Lock	Unlock	Lock	Unlock	Lock	Unlock	Lock	Unlock
Hazard warning lamp flash	Twice	Once	Twice	—	—	—	Twice	Once	Twice	—	—	Once
Horn sound	Once	—	—	—	—	—	—	—	Once	—	Once	—

Auto door lock operation mode

	MODE 1	MODE 2	MODE 3
Auto locking function	1 minutes	Nothing	5 minutes

Panic alarm operation mode

	MODE 1	MODE 2	MODE 3
Key fob operation	0.5 seconds	Nothing	1.5 seconds

Back door open operation mode

	MODE 1	MODE 2	MODE 3
Key fob operation	0.5 seconds	Nothing	1.5 seconds

Power window down (open) operation mode

	MODE 1	MODE 2	MODE 3
Key fob operation	3 seconds	Nothing	5 seconds

Work Flow

AIS000CT

1. Check the trouble symptom and customer's requests.
2. Understand outline of system. Refer to BL-49, "System Description" .
3. Confirm that power door lock system operates normally. Refer to BL-18, "POWER DOOR LOCK SYSTEM" .
4. Refer to trouble diagnosis chart by symptom, repair or replace any malfunctioning parts. Refer to BL-67, "Trouble Diagnosis Chart by Symptom" .
5. Inspection end.

Trouble Diagnosis Chart by Symptom

AIS000CV

NOTE:

- Always check the “Work Flow” before troubleshooting. Refer to BL-67, "Work Flow" .
- Always check key fob battery before replacing key fob.
- The panic alarm operation, back door opener operation and keyless power window down operation of remote keyless entry system do not activate with the ignition key inserted in the ignition key cylinder.

Symptom	Diagnoses/service procedure	Reference page
All function of remote keyless entry system do not operate.	1. Key fob battery and function check	BL-69
	2. Replace key fob. Refer to ID Code Entry Procedure. **NOTE:** If the result of key fob function check with CONSULT-II is OK, key fob is not malfunctioning.	BL-76
	3. Replace BCM	BCS-20

Symptom	Diagnoses/service procedure	Reference page
The new ID of key fob cannot be entered without CONSULT-II.	1. Key fob battery and function check	BL-69
	2. Key switch check	BL-73
	3. Door switch check	BL-71
	4. ACC switch check	BL-70
	5. Door lock and unlock switch check	BL-35
	6. Replace key fob. Refer to ID Code Entry Procedure. **NOTE:** If the result of key fob function check with CONSULT-II is OK, key fob is not malfunctioning.	BL-76
	7. Replace BCM	BCS-20
Door lock or unlock does not function.	1. Door lock operation check.	BL-19
	2. Key fob battery and function check.	BL-69
	3. Replace key fob. Refer to ID Code Entry Procedure. **NOTE:** If the result of key fob function check with CONSULT-II is OK, key fob is not malfunctioning.	BL-76
	4. Replace BCM	BCS-20
Back door does not open when back door opener button is continuously pressed.	1. Back door opener operation check.	BL-19
	2. Back door open operation mode check.	BL-66
	3. Key fob battery and function check	BL-69
	4. Key switch check	BL-73
	5. Replace BCM	BCS-20
Hazard reminder does not activate properly when pressing lock or unlock button of key fob.	1. Hazard reminder mode check* *: Hazard reminder can be activated or deactivated. First check the hazard reminder setting.	BL-66
	2. Check hazard warning lamp function with hazard switch.	LT-135
	3. Door switch check	BL-71
	4. Replace BCM	BCS-20
Horn reminder does not activate properly when pressing lock button of key fob.	1. Horn reminder mode check* *: Horn reminder can be activated or deactivated. First check the horn chirp setting.	BL-66
	2. Check horn chirp function with horn switch.	BL-75
	3. Door switch check	BL-71
	4. IPDM E/R operation check	BL-74
	5. Replace BCM	BCS-20
Interior lamp and step lamp operation do not activate properly.	1. Interior lamp and step lamp operation check	BL-75
	2. Door switch check	BL-71
	3. Replace BCM	BCS-20

Symptom	Diagnoses/service procedure	Reference page
Panic alarm (horn and headlamp) does not activate when panic alarm button is continuously pressed.	1. Panic alarm mode check* *: Panic alarm can be activated or deactivated. First check the Panic alarm setting.	BL-66
	2. Key fob battery and function check	BL-69
	3. Headlamp alarm check	BL-75
	4. Check horn chirp function with horn switch.	BL-75
	5. IPDM E/R operation check	BL-74
	6. Key switch check	BL-73
	7. Replace key fob. Refer to ID Code Entry Procedure. **NOTE:** If the result of key fob function check with CONSULT-II is OK, key fob is not malfunctioning.	BL-76
	8. Replace BCM	BCS-20
Auto door lock operation does not activate properly. (All other remote keyless entry system function is OK.)	1.Auto door lock operation mode check* *: Auto door lock operation can be activated or deactivated. First check the auto door lock operation setting.	BL-66
	2. Replace BCM	BCS-20
Keyless power window down (open) operation does not activate properly. (All other remote keyless entry system function is OK.)	1. Power window down operation mode check* *: Power window down operation can be activated or deactivated. First check the power window down setting.	BL-66
	2. Check power window function	GW-17
	3. Replace BCM	BCS-20

Key Fob Battery and Function Check

AIS000CW

1. CHECK KEY FOB BATTERY

1. Remove key fob battery. Refer to BL-79, "Key Fob Battery Replacement" .
2. Measure voltage between battery positive and negative terminals.

Voltage : 2.5V - 3.0V

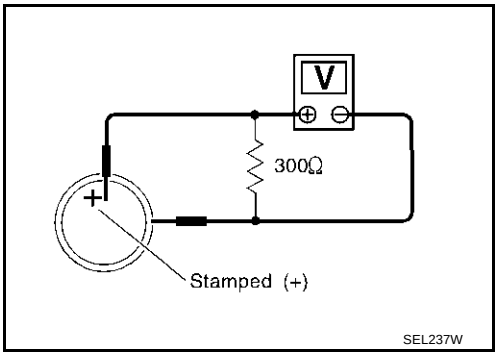

NOTE:
Key fob does not function if battery is not set correctly.

OK or NG

OK >> GO TO 2
NG >> Replace battery.

2. CHECK KEY FOB FUNCTION

With CONSULT-II

Check key fob function in “DATA MONITOR” mode with CONSULT-II.

When pushing each button of key fob, the corresponding monitor item should be turned as follows.

Condition	Monitor item	
Pushing LOCK	LK BUTTON/SIG	: ON
Pushing UNLOCK	UN BUTTON/SIG	: ON
Keep pushing UNLOCK	UN BUTTON/SIG *: UN BUTTON/SIG stays ON while keep pushing UNLOCK button.	: ON*
Pushing BACK DOOR	TRUNK BTN/SIG	: ON
Pushing PANIC	PANIC BTN	: ON
Pushing LOCK and UNLOCK at the same time	LK/UN BTN ON	: ON

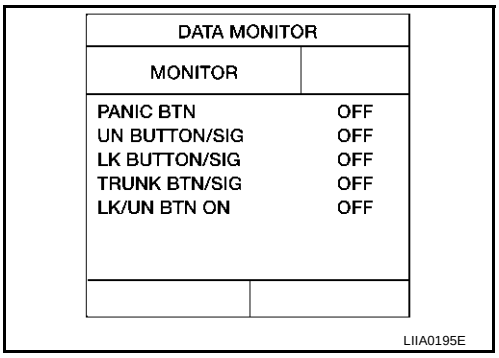

OK or NG

OK >> Key fob is OK.
NG >> Replace key fob.

ACC Switch Check

AIS001OV

1. CHECK ACC SWITCH

With CONSULT-II

Check ACC switch (“ACC SW”) in “DATA MONITOR” mode with CONSULT-II.

Monitor item	Condition	
ACC SW	Ignition switch position is ACC or ON	: ON
	Ignition switch position is OFF	: OFF

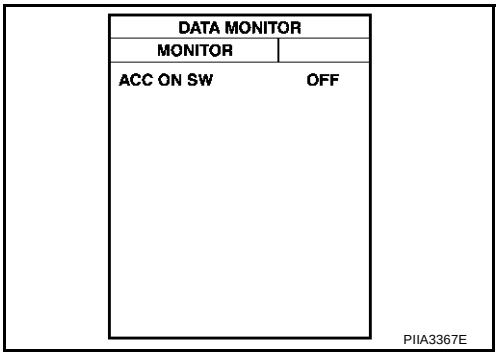

Without CONSULT-II

Check voltage between BCM connector and ground.

Item	Terminals (Wire color)			Condition	Voltage [V]
	(+)		(–)		
	Con-nector	Terminal (Wire color)			
Ignition switch	M1	36 (LG)	Ground	ACC or ON	Battery voltage
				OFF	0

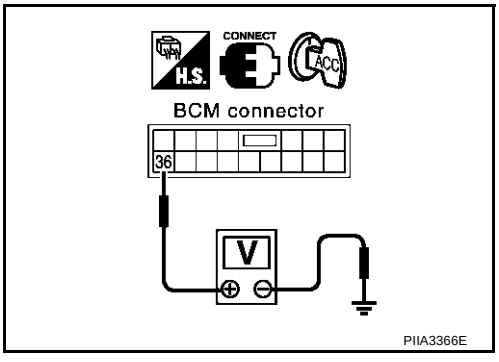

OK or NG

OK >> ACC switch is OK.
NG >> Check the following.

- 10A fuse [No. 6, located in fuse block (J/B)]
- Harness for open or short between BCM and fuse.

Door Switch Check

AIS000CX

DRIVER SIDE DOOR SWITCH AND PASSENGER SIDE DOOR SWITCH CHECK

1. CHECK DOOR SWITCH INPUT SIGNAL

With CONSULT-II

Check door switches (“DOOR SW-DR” and “DOOR SW-AS”) in “DATA MONITOR” mode with CONSULT-II.

Monitor item	Condition	
DOOR SW-DR	OPEN	: ON
	CLOSE	: OFF
DOOR SW-AS	OPEN	: ON
	CLOSE	: OFF

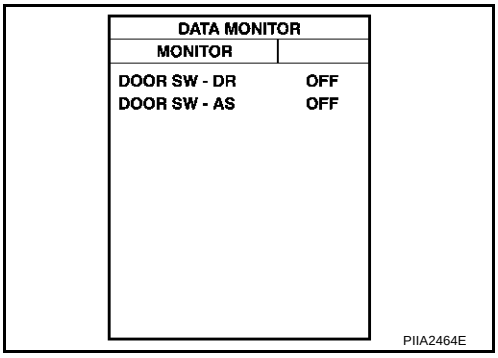

Without CONSULT-II

Check voltage between BCM connector and ground.

Item	Terminals (Wire color)			Condition	Voltage [V]
	(+)		(–)		
	Con-nector	Terminal (Wire color)			
Passenger side door switch	B4	10 (P)	Ground	OPEN	0
				CLOSE	Approx. 5
Driver side door switch		14 (W)		OPEN	0
				CLOSE	Approx. 5

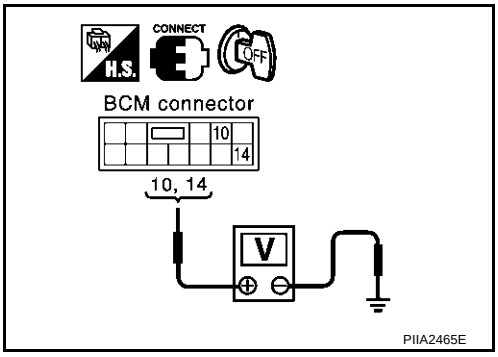

OK or NG

OK >> Door switch is OK.
NG >> GO TO 2

2. CHECK DOOR SWITCH

1. Turn ignition switch OFF.
2. Disconnect door switch and BCM connector.
3. Check continuity between door switch connector B17, B23 terminal 1 (P, W) and BCM connector B4 terminal 10 (P), 14 (W).

Passenger side door

1 (P) - 10 (P) :Continuity should exist.

Driver side door

1 (W) - 14 (W) :Continuity should exist.

4. Check continuity between door switch connector B17, B23 terminal 1(P, W) and ground.

Each door switch

1 (P, W) - Ground :Continuity should not exist.

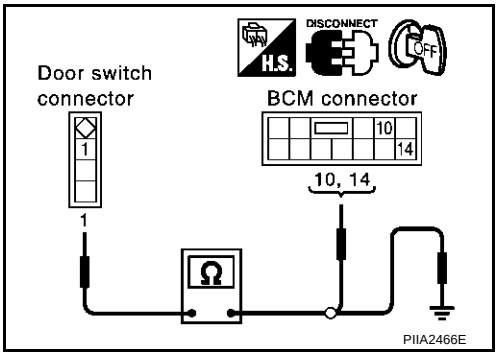

OK or NG

OK >> Check door switch.
NG >> Repair or replace door switch harness.

BACK DOOR SWITCH CHECK

1. CHECK BACK DOOR SWITCH INPUT SIGNAL

With CONSULT-II

Check back door switch (“BACK DOOR SW”) in “DATA MONITOR” mode with CONSULT-II.

Monitor item	Condition	
BACK DOOR SW	OPEN	: ON
	CLOSE	: OFF

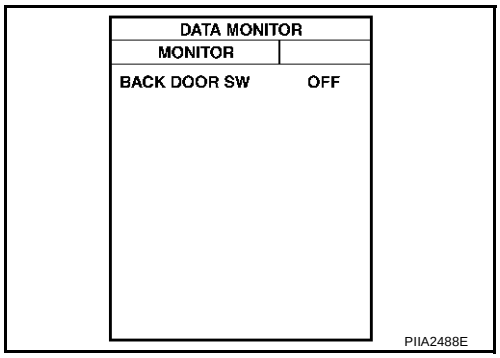

Without CONSULT-II

Check voltage between BCM connector and ground.

Item	Terminals (Wire color)			Condition	Voltage [V]
	(+)		(–)		
	Con-nector	Terminal (Wire color)			
Back door switch	B4	18 (R/W)	Ground	OPEN	0
				CLOSE	Approx. 12*

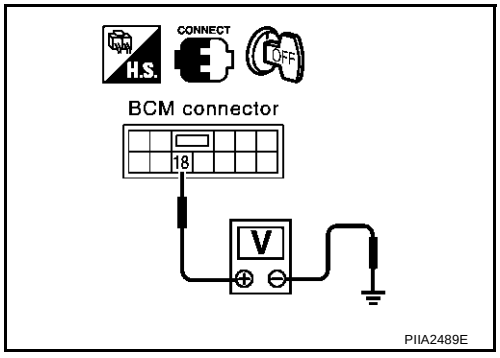

*: When interior lamp battery saver control is in OFF. →Approx. 5V

OK or NG

OK >> Back door switch is OK.
NG >> GO TO 2

2. CHECK DOOR SWITCH HARNESS

1. Turn ignition switch OFF.
2. Disconnect back door switch and BCM connector.
3. Check continuity between back door switch connector T12 terminal 1 (R/W) and BCM connector B4 terminal 18 (R/W).

   Back door

   1 (R/W) - 18 (R/W) :Continuity should exist.

4. Check continuity between back door switch connector T12 terminal 1(R/W) and ground.

   Back door switch

   1 (R/W) - Ground :Continuity should not exist.

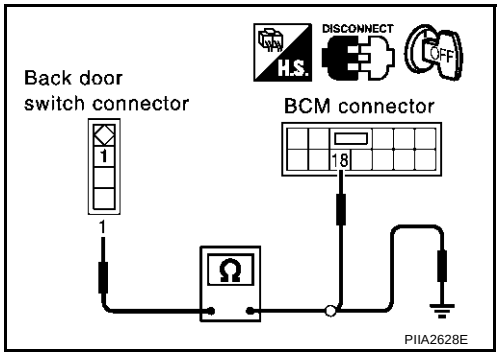

OK or NG

OK >> GO TO 3
NG >> Repair or replace back door switch harness.

3. CHECK BACK DOOR SWITCH

1. Turn ignition switch OFF.
2. Disconnect door switch and BCM connector.
3. Check continuity between door switch connector T12 terminal 3 (B) and ground.

Back door

3 (B) - Ground :Continuity should exist.

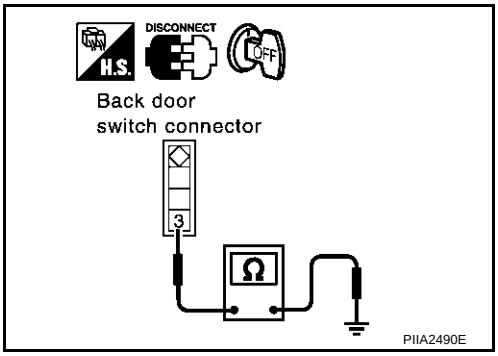

OK or NG

OK >> Check back door switch.
NG >> Repair or replace back door switch harness.

Key Switch Check

AIS000CZ

1. CHECK KEY SWITCH INPUT SIGNAL

Check voltage between BCM connector and ground.

Connector	Terminal (Wire color)		Condition of key switch	Voltage (V)
	(+)	(–)		
M3	62 (B/R)	Ground	Key is inserted.	Approx. 12
			Key is removed.	0

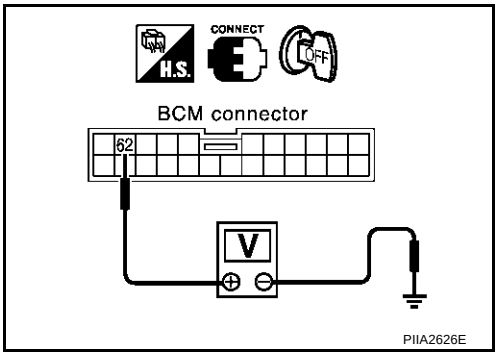

OK or NG

OK >> Key switch is OK.
NG >> GO TO 2

2. CHECK KEY SWITCH

Check continuity key switch terminal.

Connector	Terminal	Condition of key switch	Continuity
M25	1 – 2	Key is inserted.	Yes
		Key is removed.	No

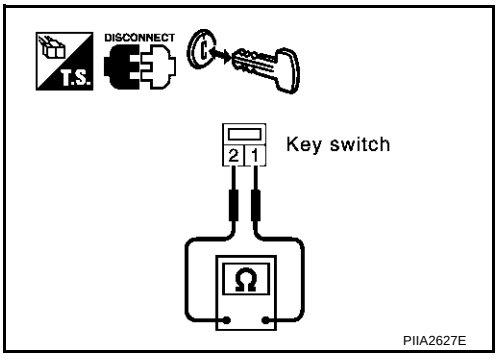

OK or NG?

OK >> Check the following.
- 10A fuse [No. 21, located in fuse block (J/B)]
- Harness for open or short between key switch and fuse
- Harness for open or short between BCM and key switch

NG >> Replace key switch.

IPDM E/R Operation Check

AIS001NY

1. CHECK IPDM E/R INPUT VOLTAGE

Check voltage between IPDM E/R connector and ground.

Connector	Terminal (Wire color)		Voltage (V)
	(+)	(–)	
E9	53 (G/B)	Ground	Approx. 12

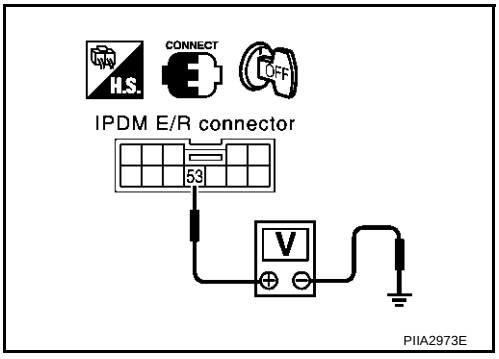

OK or NG

OK >> Replace IPDM E/R.
NG >> GO TO 2

2. CHECK IPDM E/R HARNESS

1. Turn ignition switch OFF.
2. Disconnect IPDM E/R and horn relay connector.
3. Check continuity between IPDM E/R connector E9 terminal 53 (G/B) and horn relay connector E21 terminal 1 (G/B).

1 (G/B) - 53(G/B) :Continuity should exist.

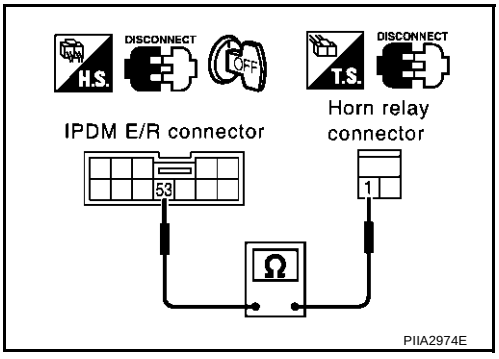

OK or NG?

OK >> Check harness connection.
NG >> Repair or replace harness.

Horn Function Check

AIS000D2

First perform the “SELF-DIAG RESULTS” in “BCM” with CONSULT-II, then perform the trouble diagnosis of malfunction system indicated “SELF-DIAG RESULTS” of “BCM”. Refer to BCS-18, "CAN Communication Inspection Using CONSULT-II (Self-Diagnosis)" .

1. CHECK HORN OPERATION

Check if horn sounds with horn switch.

Does horn operate?

Yes >> Check harness for open or short between IPDM E/R and horn relay.
No >> Check horn circuit. Refer to WW-55, "Wiring Diagram — HORN —" .

Headlamp Alarm Check

AIS001OW

First perform the “SELF-DIAG RESULTS” in “BCM” with CONSULT-II, then perform the trouble diagnosis of malfunction system indicated “SELF-DIAG RESULTS” of “BCM”. Refer to BCS-18, "CAN Communication Inspection Using CONSULT-II (Self-Diagnosis)" .

1. CHECK HEADLAMP OPERATION

Does headlamp come on when turning lighting switch “ON”.

YES or NO

Yes >> Headlamp alarm circuit is OK.
No >> Check headlamp system. Refer to LT-7, "HEADLAMP (FOR USA) - XENON TYPE -" , LT-37, "HEADLAMP (FOR USA) - CONVENTIONAL TYPE -" , LT-66, "HEADLAMP (FOR CANADA) - XENON TYPE -" , LT-101, "HEADLAMP (FOR CANADA) - CONVENTIONAL TYPE -" .

Interior Lamp and Step Lamp Operation Check

AIS000D3

1. CHECK ILLUMINATION OPERATION

When interior lamp switch is in “DOOR” position, open the door (driver side or passenger side).

Interior lamp and step lamp should illuminate.

OK or NG

OK >> Replace BCM.
NG >> Check illumination circuit. Refer to LT-213, "Wiring Diagram — ROOM/L —" .

ID Code Entry Procedure

AIS000D4

KEY FOB ID SETUP WITH CONSULT-II

CAUTION:

If CONSULT-II is used with no connection of CONSULT-II CONVERTER, malfunctions might be detected in self-diagnosis depending on control unit which carry out CAN communication.

NOTE:

If a key fob is lost, the ID code of the lost key fob must be erased to prevent unauthorized use. When the ID code of a lost key fob is not known, all controller ID codes should be erased. After all ID codes are erased, the ID codes of all remaining and/or new key fobs must be re-registered.

1. Turn ignition switch “OFF”.
2. Connect “CONSULT-II” and “CONSULT-II CONVERTER” to the data link connector.

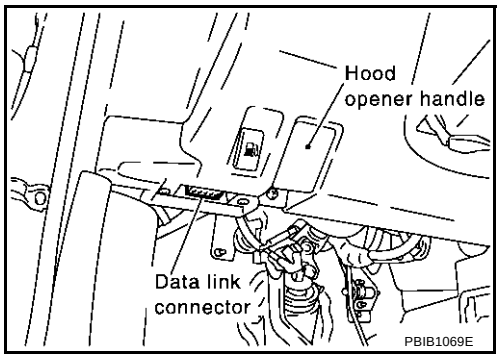

3. Turn ignition switch ON.
4. Touch “START (NISSAN BASED VHCL)”.

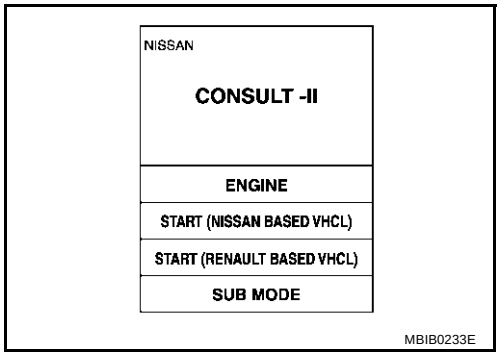

5. Touch “BCM”.
   If “BCM” is not indicated, go to GI-39, "CONSULT-II Data Link Connector (DLC) Circuit" .

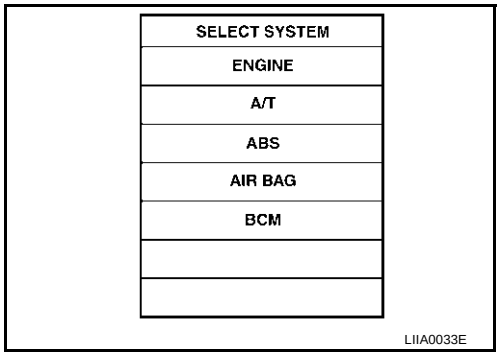

6. Touch “MULTI REMOTE ENT”.

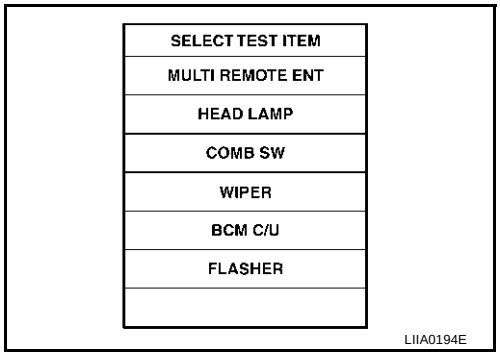

7. Touch “WORK SUPPORT”.

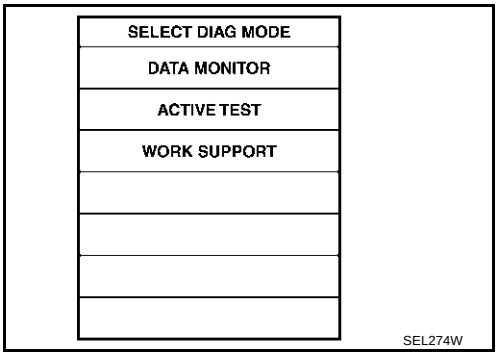

8. The items shown on the figure can be set up.
   - “REMO CONT ID CONFIR”
     Use this mode to confirm if a key fob ID code is registered or not.
   - “REMO CONT ID REGIST”
     Use this mode to register a key fob ID code.

     NOTE:
     Register the ID code when key fob or BCM is replaced, or when additional key fob is required.
   - “REMO CONT ID ERASUR”
     Use this mode to erase a key fob ID code.

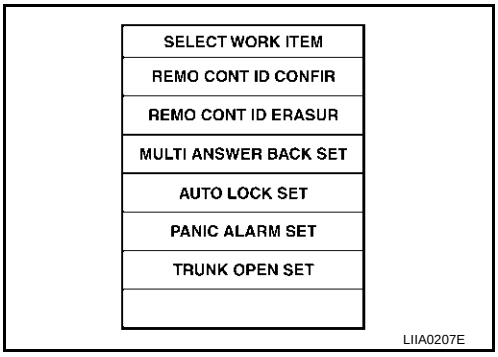

KEY FOB ID SETUP WITHOUT CONSULT-II

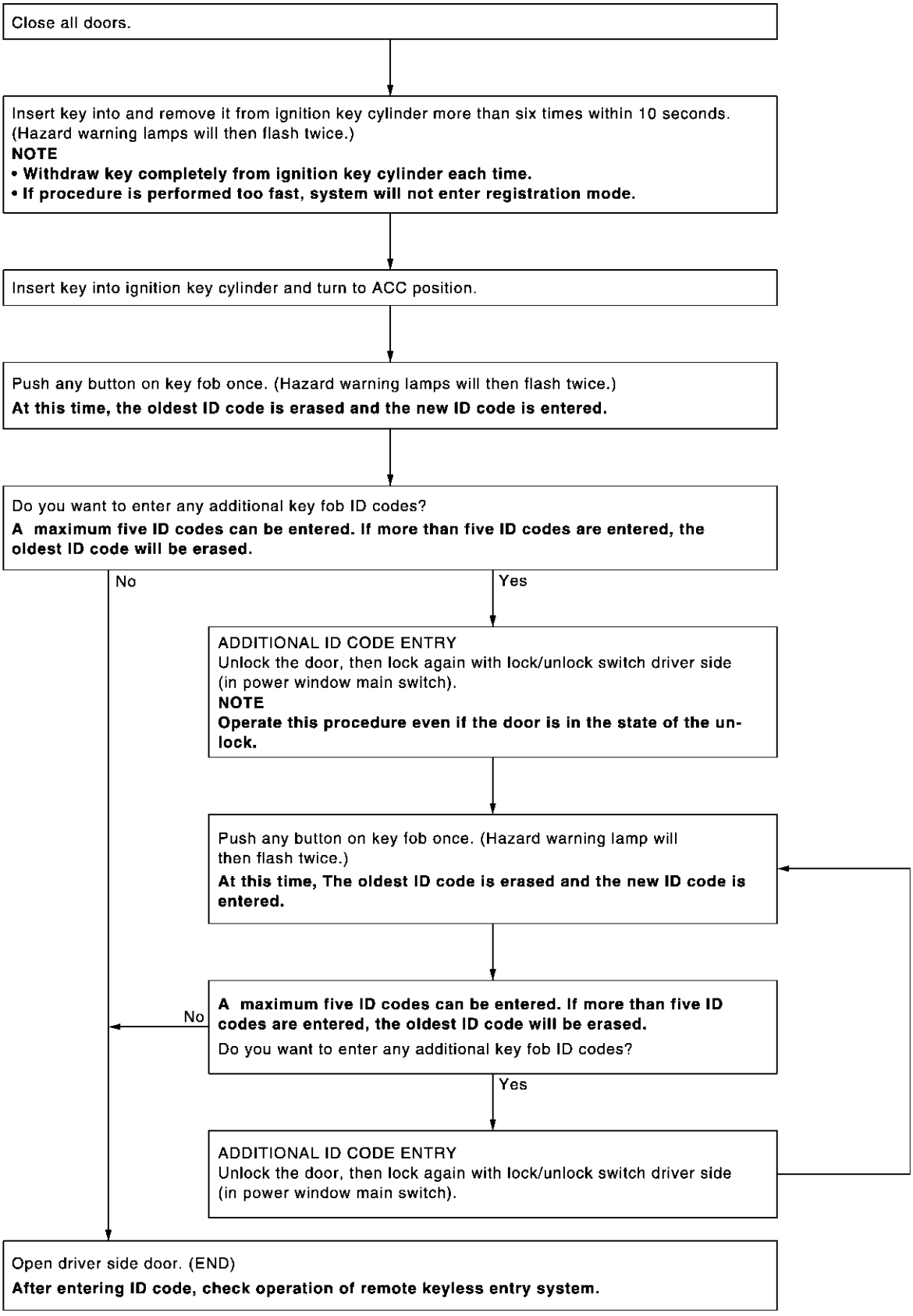

PIIA2839E

NOTE:

- If a key fob is lost, the ID code of the lost key fob must be erased to prevent unauthorized use. A specific ID code can be erased with CONSULT-II. However, when the ID code of a lost key fob is not known, all controller ID codes should be erased. After all ID codes are erased, the ID codes of all remaining and/or new key fobs must be re-registered.
  To erase all ID codes in memory, register one ID code (key fob) five times. After all ID codes are erased, the ID codes of all remaining and/or new key fobs must be re-registered.
- When registering an additional key fob, the existing ID codes in memory may or may not be erased. If five ID codes are stored in memory, when an additional code is registered, only the oldest code is erased. If less than five ID codes are stored in memory, when an additional ID code is registered, the new ID code is added and no ID codes are erased.
- If you need to activate more than two additional new key fobs, repeat the procedure “Additional ID code entry” for each new key fob.
- Entry of maximum five ID codes is allowed. When more than five ID codes are entered, the oldest ID code will be erased.
- Even if same ID code that is already in the memory is input, the same ID code can be entered. The code is counted as an additional code.

Key Fob Battery Replacement

AIS000D5

NOTE:

- Be careful not to touch the circuit board or battery terminal.
- The keyfob is water-resistant. However, if it does get wet, immediately wipe it dry.

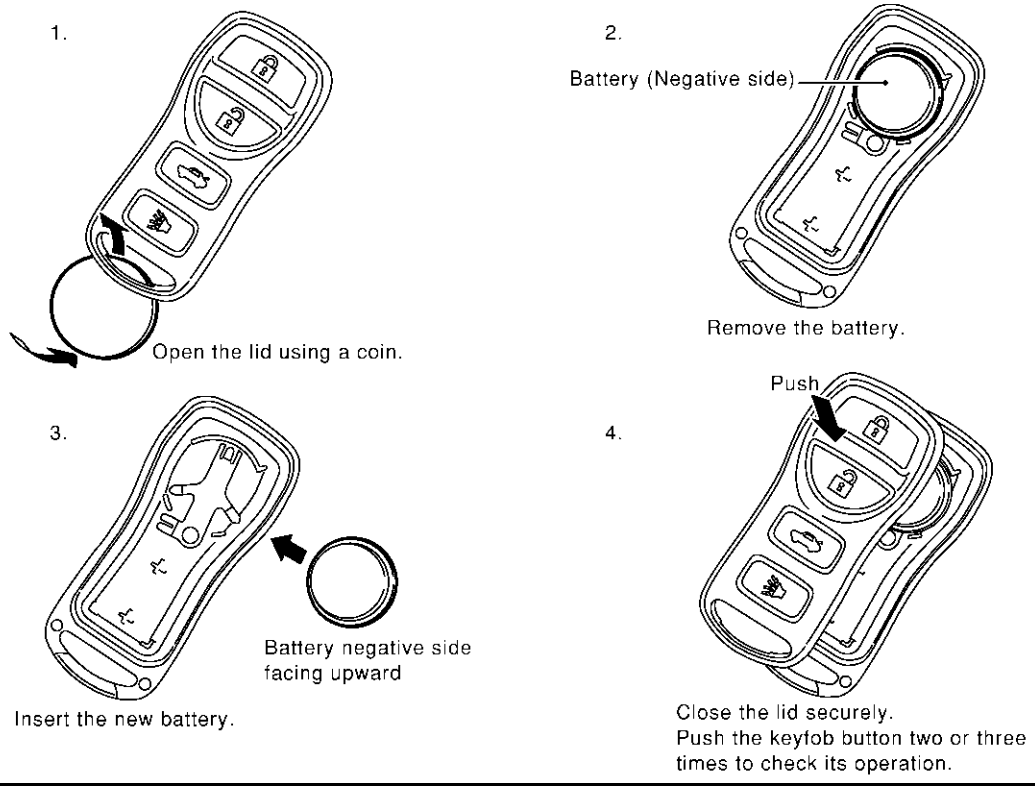

DOOR

PFP:80100

Fitting Adjustment

AIS000D6

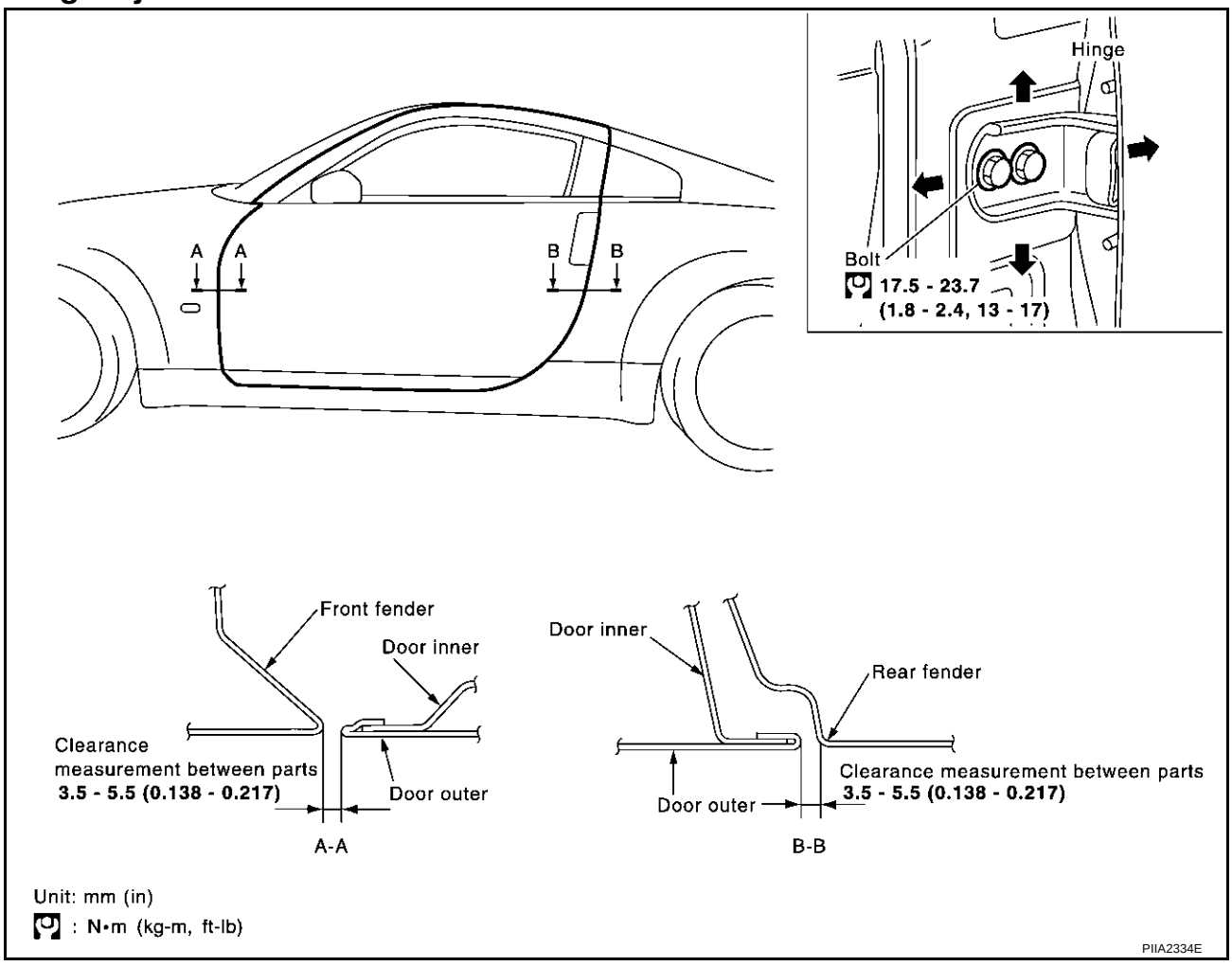

DOOR

Longitudinal clearance and surface height adjustment at front end

1. Remove the fender protector. Refer to EI-21, "Removal and Installation" .
2. Loosen the hinge mounting bolts. Raise the door at rear end to adjust.

STRIKER ADJUSTMENT

1. Adjust the striker so that it becomes parallel with the lock insertion direction.

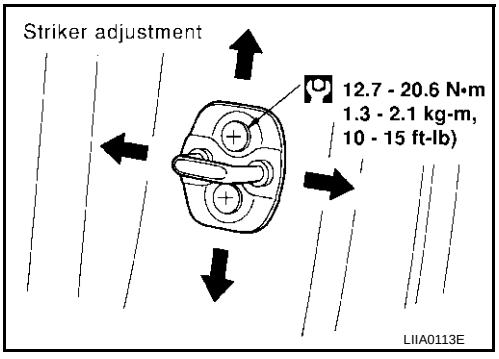

Removal and Installation

AIS000D7

CAUTION:

- **When removing and installing the door assembly, support the door with a jack and shop cloth to protect the door and body.**
- **When removing and installing door assembly, be sure to carry out the fitting adjustment.**
- **Check the hinge rotating part for poor lubrication. If necessary, apply “body grease”.**
- **After installing, check operation.**

REMOVAL

1. Pull the lever and remove the door harness connector while removing tabs of door harness connector.

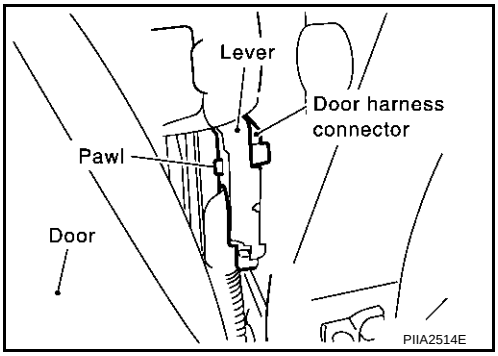

2. Remove the mounting bolts of the check link on the vehicle.

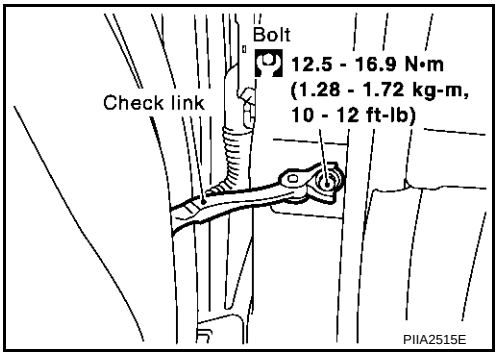

3. Remove the door-side hinge mounting nuts, and remove the door assembly.

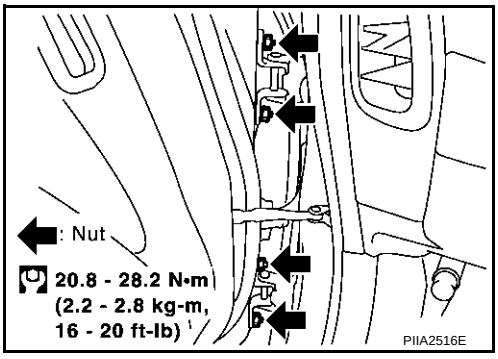

INSTALLATION

Install in the reverse order of removal.

Door Weather-strip

AIS000D8

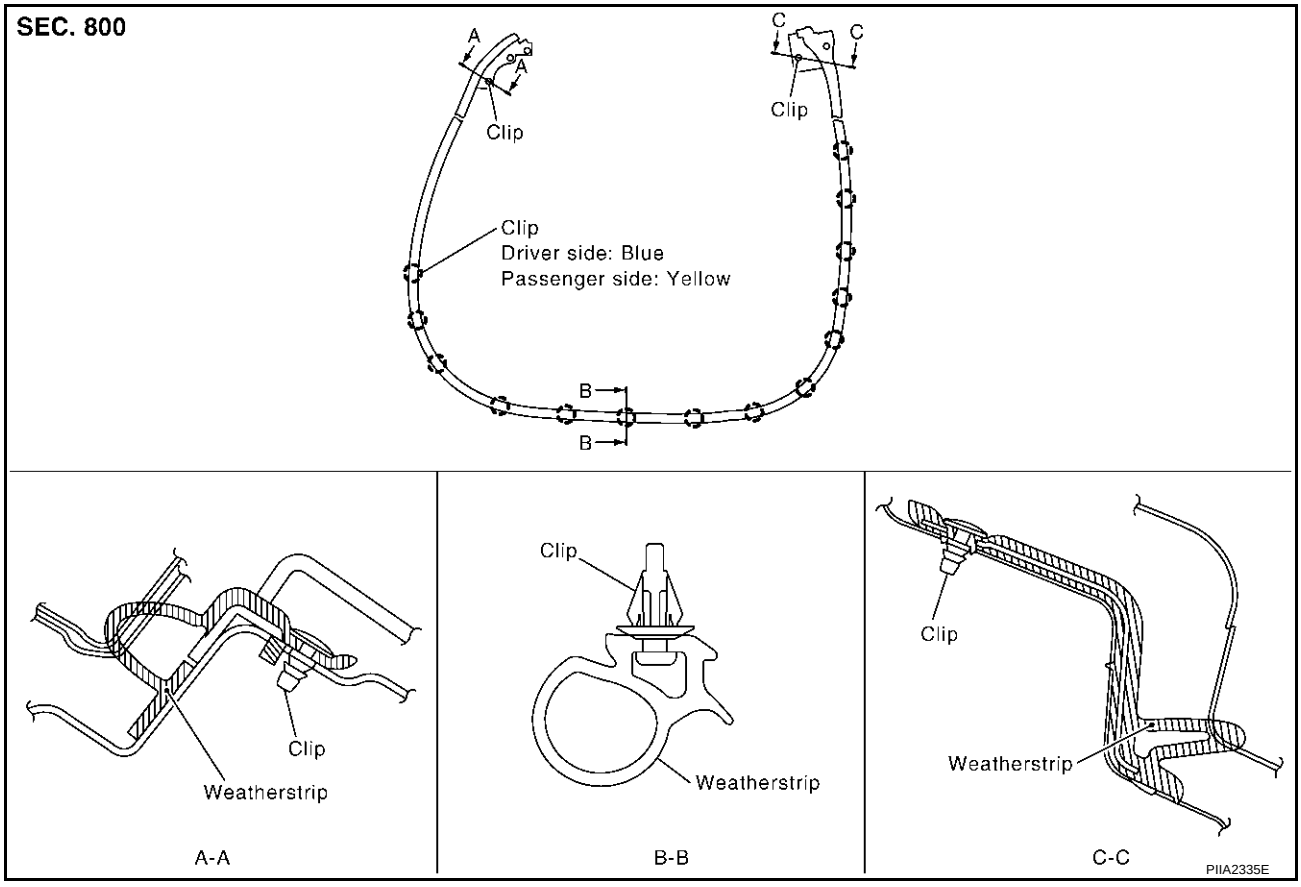

DOOR LOCK

PFP:80502

Component Structure

AIS000D9

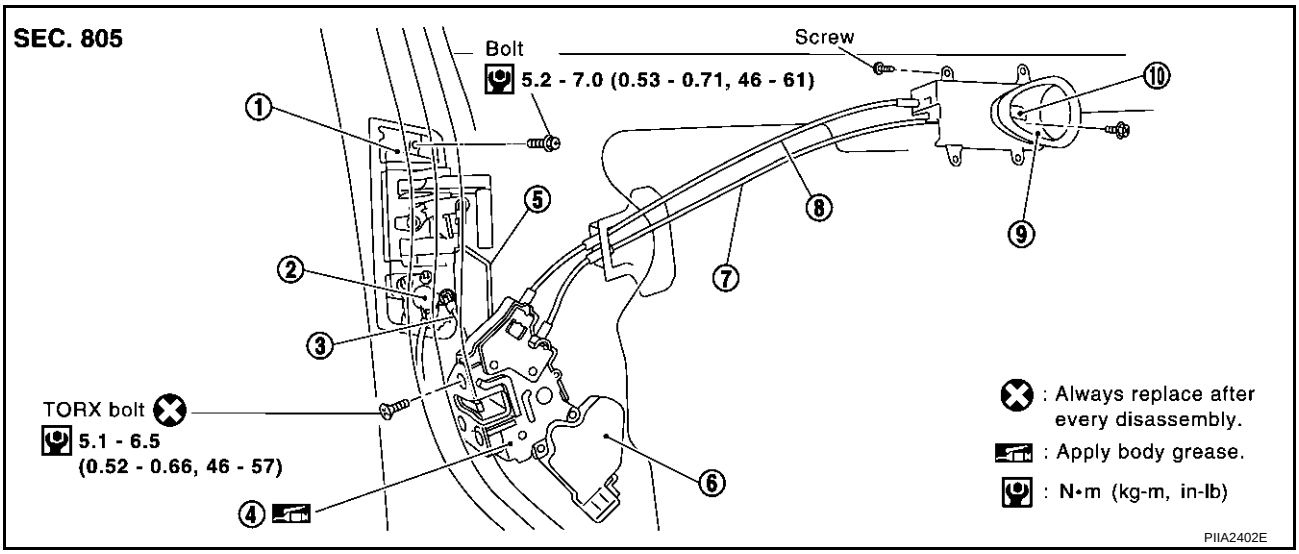

1. Outside handle
2. Key cylinder (driver side only)
3. Key lock rod (driver side only)
4. Door lock assembly
5. Outside handle rod
6. Door lock actuator
7. Lock knob cable
8. Inside handle cable
9. Inside handle
10. Lock knob

Inspection and Adjustment.

AIS000DA

1. Remove the door finisher. Refer to EI-30, "Removal and Installation" .
2. Remove the door window and door module assembly. Refer to GW-52, "Removal and Installation" .

EXTERIOR HANDLE ROD ADJUSTMENT

Rotate the bushing to adjust so that the clearance between the bushing and rod becomes as shown in the figure.

CAUTION:

Be careful not to make the clearance 0 mm (0 in) or the rod will be pressed continuously.

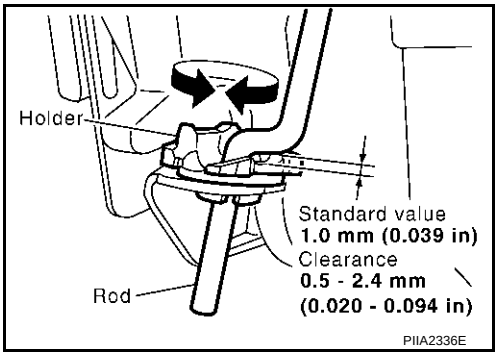

Removal and Installation

AIS000DB

REMOVAL

1. Remove the door finisher. Refer to EI-30, "Removal and Installation" .
2. Remove the door window and door module assembly. Refer to GW-52, "Removal and Installation" .
3. Disconnect the inside handle cable and locking knob cable from the back side of the door finisher.

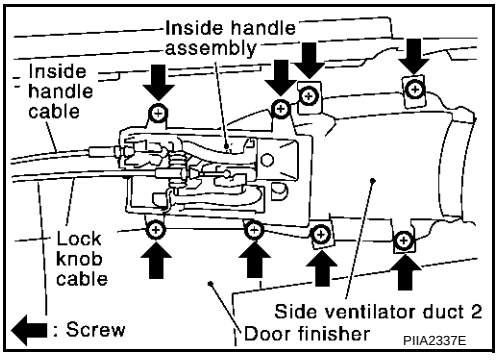

4. Reach to separate the key cylinder (driver side only) rod and outside handle rod connection (on the handle).
5. Disconnect the door lock actuator connector.
6. Remove the mounting screws (TORX T30), remove the door lock assembly.

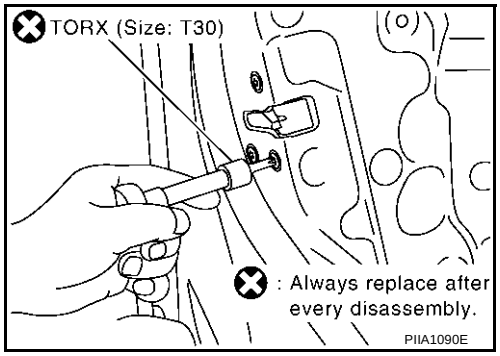

7. Remove the outside handle mounting bolts, remove the outside handle.

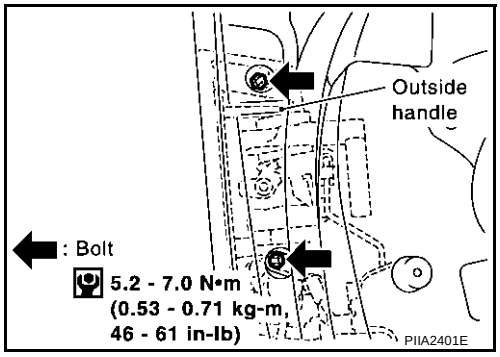

INSTALLATION

Install in the reverse order of removal.

CAUTION:

- **To install each rod, be sure to rotate the rod holder until a click is felt.**
- **After installing, check operation.**
- **After installing, perform fitting adjustment. Refer to** **BL-80, "Fitting Adjustment"** **.**

Disassembly and Assembly

AIS000DC

DISASSEMBLY

CAUTION:

Be sure to remove or install the actuator with the door lock assembly removed.

1. Remove the mounting screws, and remove the actuator from the door lock assembly.
2. Pull the actuator straight downward to separate it from the door lock assembly.

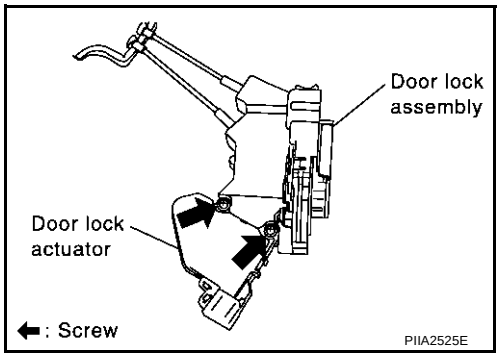

ASSEMBLY

1. Align the actuator pivot with the cutout on the knob lever of the door lock assembly, then assemble the actuator.
2. Move the knob lever and the actuator pivot toward the lock-on direction, and check that it engages securely.

BACK DOOR

PFP:90100

Fitting Adjustment

AIS0013P

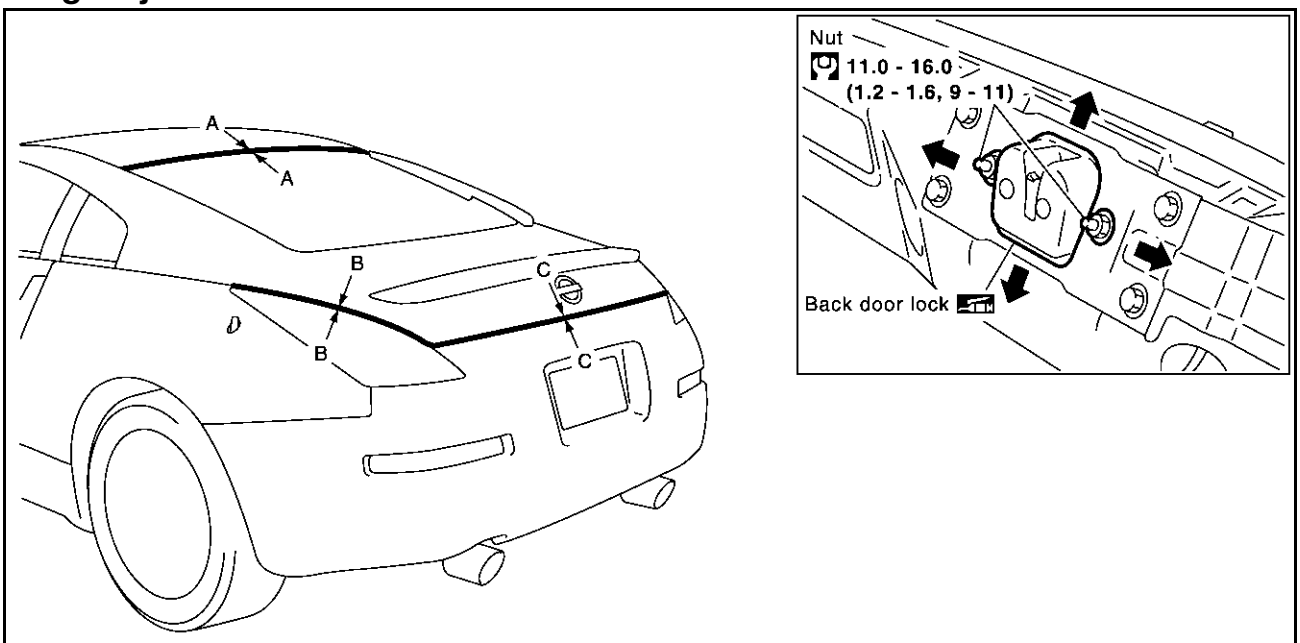

Clearance measurement between parts

A–A : 5.4 - 8.6 (0.213 - 0.331)
B–B : 3.0 - 7.0 (0.118 - 0.276)
C–C : 3.0 - 7.0 (0.118 - 0.276)

Unit : mm (in)

: Apply body grease.

: N•m (kg-m, ft-lb)

PIIA2403E

VERTICAL/LATERAL CLEARANCE ADJUSTMENT

1. Remove back door weatherstrip. Refer to BL-88, "Removal and Installation of Back Door Weatherstrip" .
2. Remove the luggage finisher lower (center). Refer to EI-35, "LUGGAGE FLOOR TRIM" .
3. Loosen the back door lock mounting bolts. Raise the back door lock to the top position, and temporarily tighten the back door lock mounting bolt at the position.
4. Close the back door lightly and adjust the surface height and, then open the back door to finally tighten the back door lock mounting bolts to the specified torque.

Back Door Assembly

AIS0013Q

REMOVAL

1. Remove the headlining. Refer to EI-37, "Removal and Installation" .
2. Disconnect each harness connector, which is out to body from back door.
3. Support the back door striker with a proper material to prevent it from falling.

   WARNING:
   Body injury may occur if no supporting rod is holding the back door open when removing the damper stay.

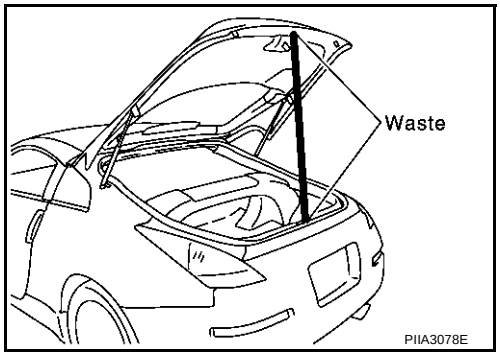

4. Remove stud balls on back door.

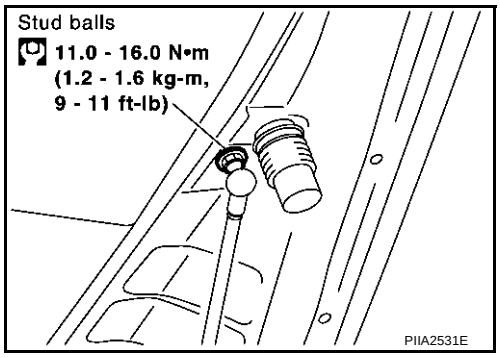

5. Remove hinge mount nuts of the body and remove back door assembly.

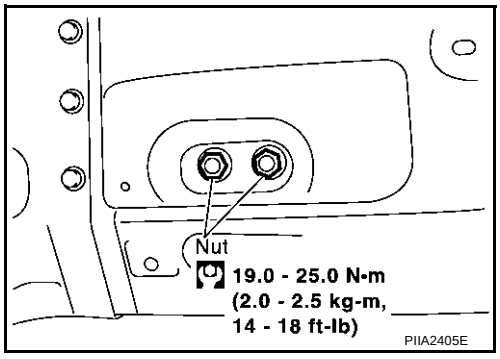

INSTALLATION

Install in the reverse order of removal.

CAUTION:

- **After installing, check operation.**
- **After installing, perform fitting adjustment.**

INSPECTION

1. Check hinges for the following items:
   - Malfunction noise or door closing and opening effort
   - Component wear or damage
2. Apply Grease to the rotating part of the hinge.

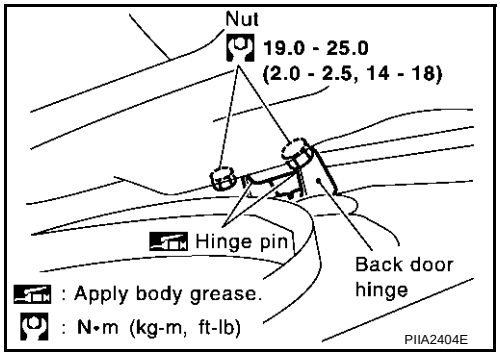

Removal and Installation of Back Door Striker

AIS0013R

REMOVAL

1. Remove back door finisher lower. Refer to EI-39, "BACK DOOR FINISHER" .
2. Remove mounting screws, and remove striker from the vehicle.

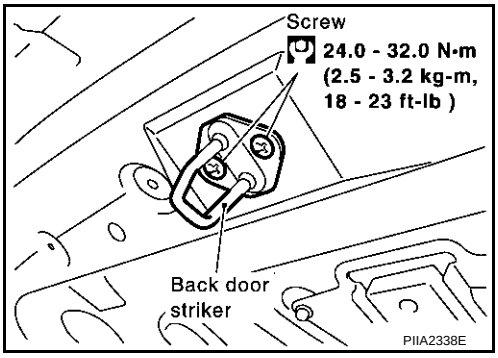

INSTALLATION

Install in the reverse order of removal.

CAUTION:

After installing, perform fitting adjustment.

Removal and Installation of Back Door Stay

AIS0013S

REMOVAL

1. Support the back door striker with a proper material to prevent it from falling.

   WARNING:

   Body injury may occur if no supporting rod is holding the back door open when removing the damper stay.

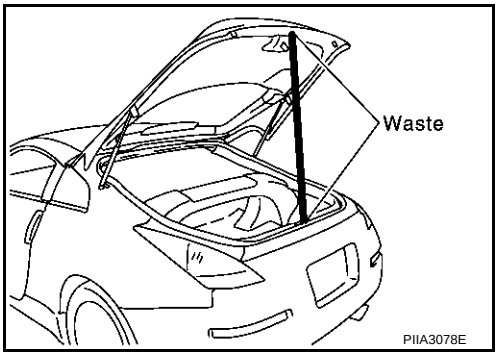

2. Remove stud balls on back door.

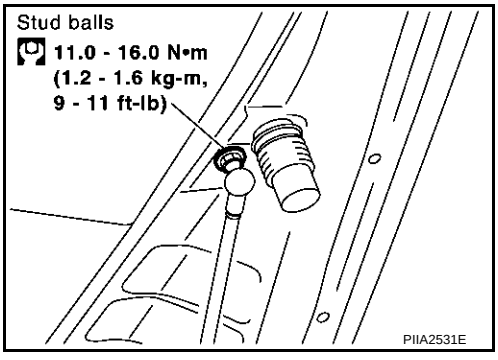

3. Remove back door stay assembly (gas stay) bracket adjusting nuts and remove back door stay assembly.

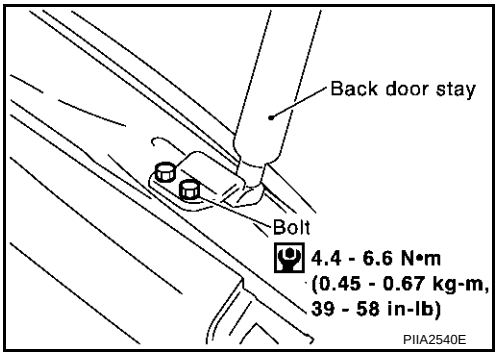

INSTALLATION

Install in the reverse order of removal.

CAUTION:
After installing, check operation.

Removal and Installation of Back Door Weatherstrip

AIS0013T

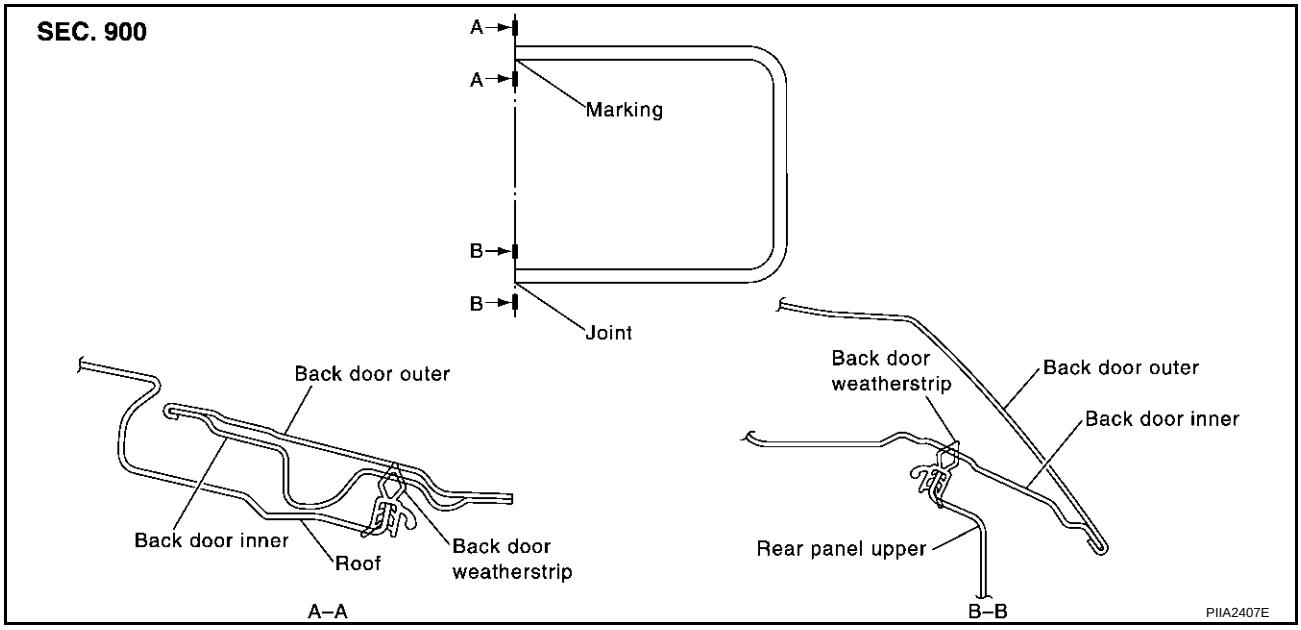

1. Working from the upper section, align weatherstrip mark with vehicle center position mark and install weatherstrip onto the vehicle.
2. For the lower section, align the weatherstrip seam with center of the striker.
3. After installation, pull the weatherstrip gently to ensure that there is no loose section.

   NOTE:
   Make sure the weatherstrip is fit tightly at each corner and back door rear plate.

BACK DOOR LOCK

PFP:90504

Removal and Installation of Back Door Lock & Back Door Opener Actuator

AIS0013U

REMOVAL

1. Remove back door weatherstrip. Refer to BL-88, "Removal and Installation of Back Door Weatherstrip" .
2. Remove luggage finisher lower (center). Refer to EI-35, "LUGGAGE FLOOR TRIM" .
3. Disconnect the connector and the clip of the back door opener.
4. Remove the mounting bolts.

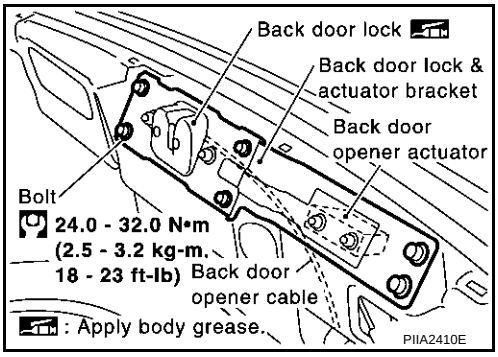

5. Disconnect the connector of the back door opener actuator and back door opener cable, remove the bracket.
6. Remove the mounting nuts, remove back door lock and back door opener actuator.

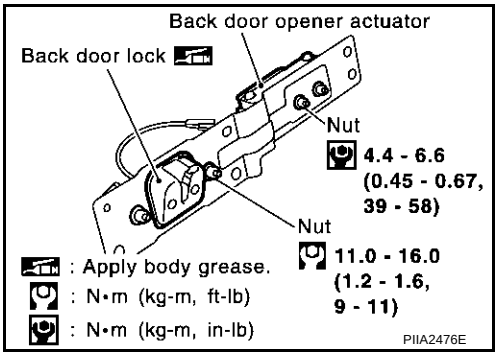

INSTALLATION

Install in the reverse order of removal.

CAUTION:

- **After installing, check operation.**
- **After installing, perform fitting adjustment. Refer to BL-85, "Fitting Adjustment" .**

INSPECTION

1. Check back door lock for the following items.
   - Malfunction noise or door closing and opening effort
   - Component wear or damage
2. Apply body grease to the rotating part of the back door lock.

Removal and Installation of Back Door Opener Switch (External)

AIS0013V

REMOVAL

1. Remove rear bumper fascia assembly. Refer to EI-17, "Removal and Installation" .
2. Remove the mounting screws of the license plate bracket.

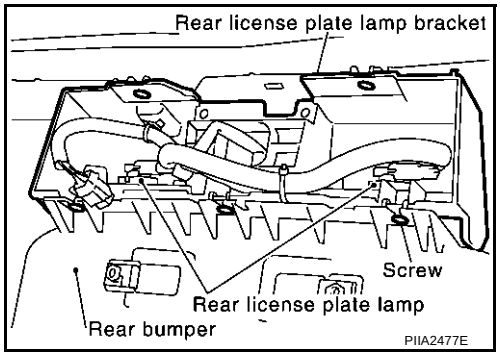

3. Remove the mounting screws and connector of the back door opener switch.

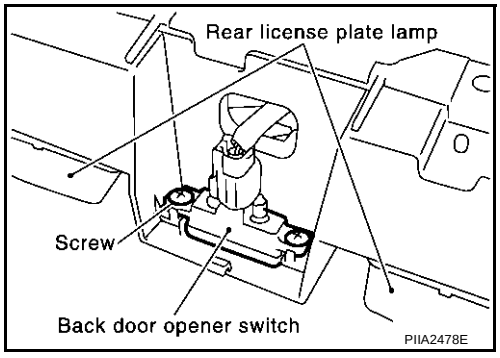

INSTALLATION

Install in the reverse order of removal.

CAUTION:

- **After installing, check operation.**

VEHICLE SECURITY (THEFT WARNING) SYSTEM

PFP:28491

Component Parts and Harness Connector Location

AIS0014P

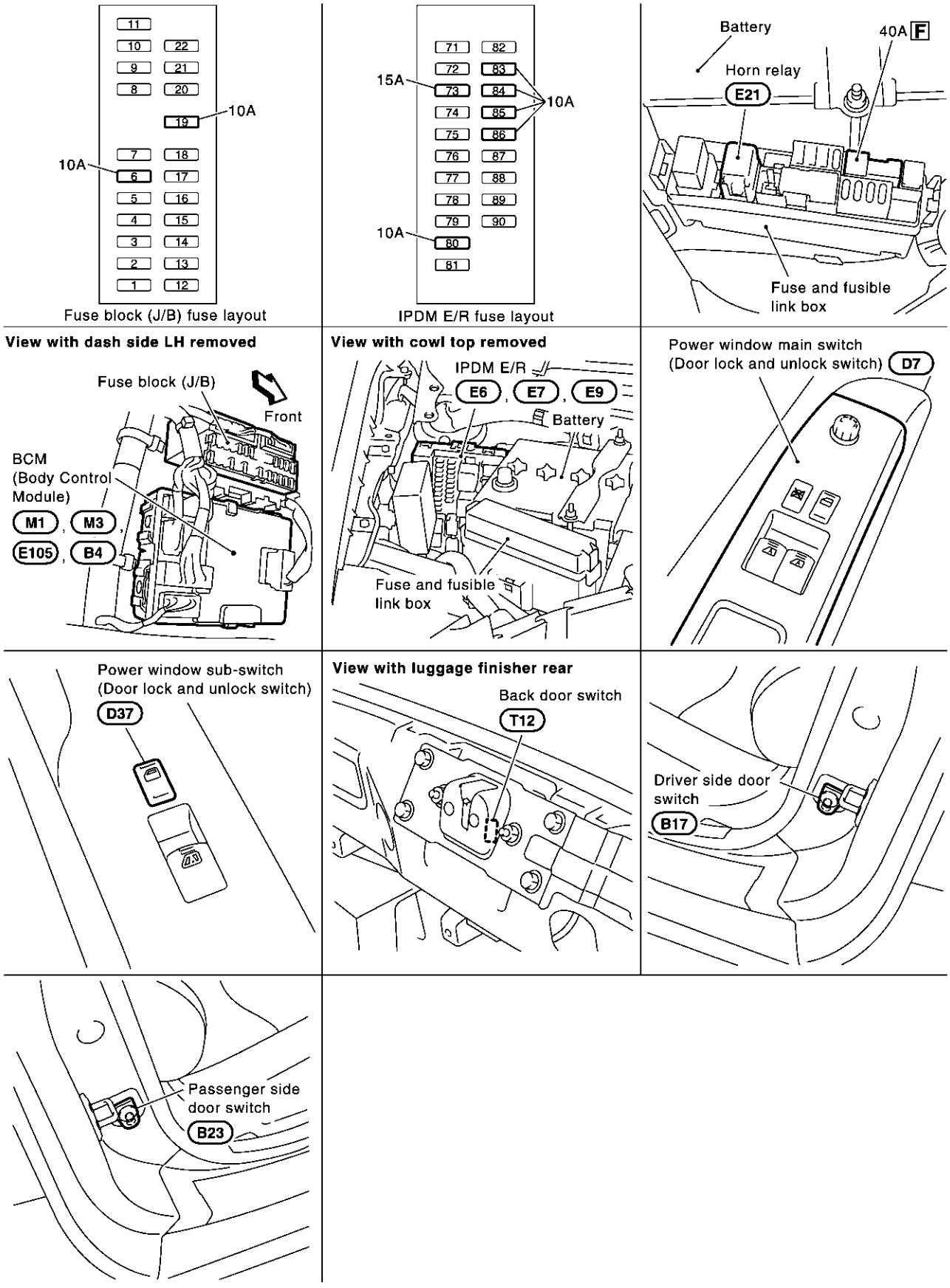

PIIA2508E

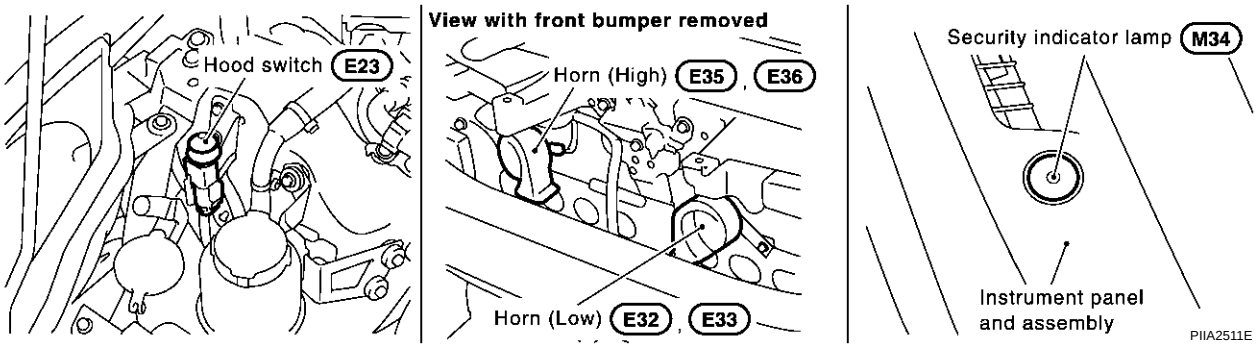

System Description

AIS0014Q

DESCRIPTION

Operation Flow

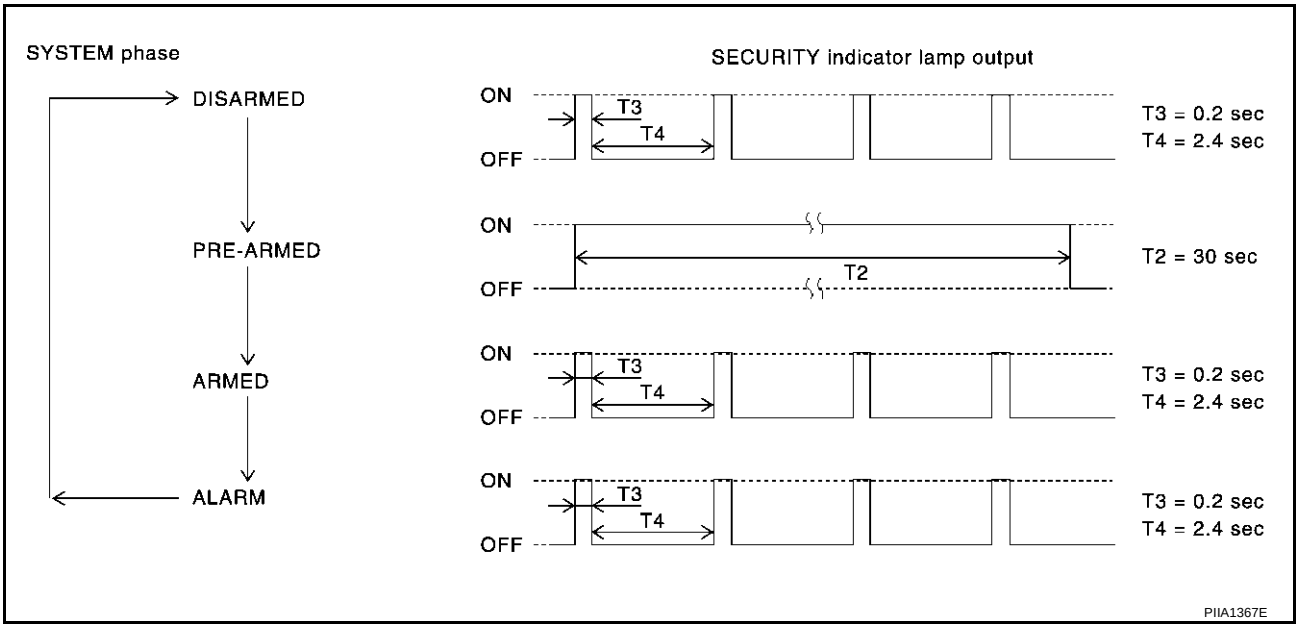

Setting the vehicle security system

Initial condition

- Ignition switch is in OFF position.

Disarmed phase

- When hood, doors or back door is open, the vehicle security system is set in the disarmed phase on the assumption that the owner is inside or near the vehicle.
- When the vehicle security system is in the disarmed phase, the security indicator lamp blinks every 2.4 seconds.

Pre-armed phase and armed phase

When the following operation 1 or 2 is performed, the vehicle security system turns into the “pre-armed” phase. (The security indicator lamp illuminates.)

1. BCM receives LOCK signal from door key cylinder switch or key fob after hood, back door and all doors are closed.
2. Hood and all doors are closed after doors are locked by key or door lock and unlock switch.
   The security indicator lamp illuminates for 30 seconds. Then, the system automatically shifts into the “armed” phase.

Canceling the set vehicle security system

When one of the following operations is performed, the armed phase is canceled.

1. Unlock the doors with the key or the key fob.
2. Open the back door with the key fob.
3. Turn ignition switch to “ON” or “ACC” position.

Canceling the alarm operation of the vehicle security system

When one of the following operations is performed, the alarm operation is canceled.

- Unlock the door with the key or key fob.
- Open the back door with the key fob.

Activating the alarm operation of the vehicle security system

Make sure the system is in the armed phase. (The security indicator lamp blinks every 2.4 seconds.)
When the following operation 1 or 2 is performed, the system sounds the horns and flashes the headlamps for about 50 seconds.

1. Hood or any door is opened during armed phase.
2. Disconnecting and connecting the battery connector before canceling armed phase.

POWER SUPPLY

Power is supplied at all times

- through 10A fuse [No.19, located in the fuse block (J/B)]
- to security indicator lamp terminal 1.

Power is supplied at all times

- through 40A fusible link (letter **F** , located in the fuse and fusible link box)
- to BCM terminal 7.

With the ignition switch in the ACC or ON position, power is supplied

- through 10A fuse [No. 6, located in the fuse block (J/B)]
- to BCM terminal 36.

INITIAL CONDITION TO ACTIVATE THE SYSTEM

The operation of the vehicle security system is controlled by the doors and hood.
To activate the vehicle security system, BCM must receive signals indicating the doors and hood are closed and the doors are locked by key or key fob.
When a door is open, BCM terminals 10, 14 or 18 receives a ground signal from each door switch.
When driver side door is unlocked by power window main switch (door lock and unlock switch), BCM terminal 74 receives a signal from terminal 12 of power window main switch.
When passenger side door is unlocked by power window sub-switch (door lock and unlock switch), BCM terminal 74 receives a signal from terminal 16 of power window sub-switch.
When the hood is open, IPDM E/R receives a ground signal

- from hood switch terminal 1
- to IPDM E/R terminal 51
- through body grounds E17, E43 and F152.

The IPDM E/R then sends a signal to the BCM through the CAN SYSTEM.
When the back door is open, BCM terminal 18 receives a ground signal

- from terminal 1 of the back door switch
- through body grounds B5, B6,T14 and D105.

VEHICLE SECURITY SYSTEM ALARM OPERATION

The vehicle security system is triggered by

- opening a driver and passenger side door
- opening the back door
- opening the hood
- detection of battery disconnect and connect.

The vehicle security system will be triggered once the system is in armed phase,
When BCM receives a ground signal at terminals 10, 14 (door switch), 18 (back door switch) or IPDM E/R receives a ground signal at terminal 51 (hood switch).
Power is supplied at all times

- to horn relay terminal 2
- through 15A fuse (No. 35, located in fuse and fusible link box).

When the vehicle security system is triggered, ground is supplied intermittently from IPDM E/R terminals 14 and 45.

When both headlamp relay (with built-in IPDM E/R) and horn relay are energized and then power is supplied to headlamps (high beam and low beam) and horns (HIGH and LOW).
The headlamps flash and the horn sounds intermittently.
The alarm automatically turns off after 50 seconds, but will reactivate if the vehicle is tampered with again.

VEHICLE SECURITY SYSTEM DEACTIVATION

To deactivate the vehicle security system, a door must be unlocked or back door must be opened with the key or key fob.
When the key is used to unlock a door, BCM terminal 74 receives signal

- from terminal 12 of the power window main switch (door lock and unlock switch).

When the BCM receives either above signal or unlock signal from key fob, the vehicle security system is deactivated. (Disarmed phase)

PANIC ALARM OPERATION

Remote keyless entry system may or may not operate vehicle security system (horn and headlamps) as required.
When the remote keyless entry system is triggered, ground is supplied intermittently from IPDM E/R terminals 14 and 45.
When both headlamp relay (with built-in IPDM E/R) and horn relay are energized and then power is supplied to headlamps (high beam and low beam) and horns (HIGH and LOW).
The headlamp flashes and the horn sounds intermittently.
The alarm automatically turns off after 25 seconds or when BCM receives any signal from key fob.

CAN Communication System Description

AIS0014R

CAN (Controller Area Network) is a serial communication line for real time application. It is an on-vehicle multiplex communication line with high data communication speed and excellent error detection ability. Many electronic control units are equipped onto a vehicle, and each control unit shares information and links with other control units during operation (not independent). In CAN communication, control units are connected with 2 communication lines (CAN H line, CAN L line) allowing a high rate of information transmission with less wiring. Each control unit transmits/receives data but selectively reads required data only.

Body type	Coupe						
Axle	2WD						
Engine	VQ35DE						
Transmission	A/T	M/T					
Brake control	TCS	ABS		TCS		VDC	
Low tire pressure warning system	Not Applica-ble	Not Applica-ble	Applica-ble	Not Applica-ble	Applica-ble	Not Applica-ble	Applica-ble
CAN communication unit							
ECM	×	×	×	×	×	×	×
TCM	×						
Data link connector	×	×	×	×	×	×	×
Unified meter and A/C amp.	×	×	×	×	×	×	×
BCM	×	×	×	×	×	×	×
Low tire pressure warning control unit			×		×		×
Steering angle sensor						×	×
ABS actuator and electric unit (control unit)	×	×	×	×	×		
VDC/TCS/ABS control unit						×	×
IPDM E/R	×	×	×	×	×	×	×
CAN communication type	BL-95, "TYPE 1"	BL-96, "TYPE 2/ TYPE3"		BL-98, "TYPE 4/ TYPE5"		BL-100, "TYPE 6/ TYPE7"	

×: Applicable

TYPE 1

System diagram

- Type1

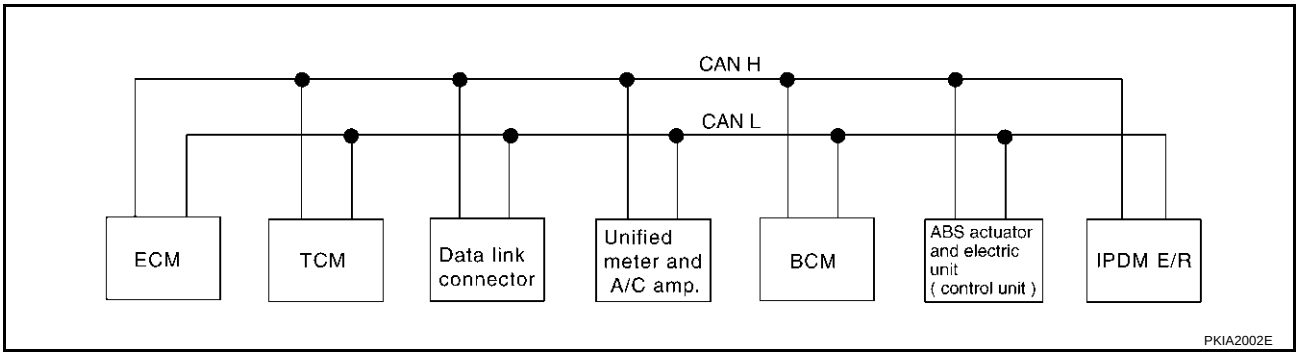

Input/output signal chart

T: Transmit R: Receive

Signals	ECM	TCM	Unified meter and A/C amp.	BCM	ABS actuator and electric unit (control unit)	IPDM E/R
Engine speed signal	T	R	R		R	
Engine torque signal	T	R				
Engine coolant temperature signal	T	R	R			
Accelerator pedal position signal	T	R			R	
Closed throttle position signal	T	R				
Wide open throttle position signal	T	R				
Battery voltage signal	T	R				
Stop lamp switch signal		R	T			
Fuel consumption monitor signal	T		R			
A/T self-diagnosis signal	R	T				
A/T CHECK indicator lamp signal		T	R			
A/T position indicator signal		T	R		R	
ABS operation signal		R			T	
A/T shift schedule change demand signal		R			T	
Air conditioner switch signal	R			T		
A/C compressor request signal	T					R
A/C compressor feedback signal	T		R			
Blower fan motor switch signal	R			T		
Cooling fan speed request signal	T					R
Position lights request signal			R	T		R
Low beam request signal				T		R
Low beam status signal	R					T
High beam request signal			R	T		R
High beam status signal	R					T
Vehicle speed signal			R		T	
	R	R	T	R		
Sleep request 1 signal			R	T		
Sleep request 2 signal				T		R

Signals	ECM	TCM	Unified meter and A/C amp.	BCM	ABS actuator and electric unit (control unit)	IPDM E/R
Wake up request 1 signal			R	T		
Door switch signal			R	T		R
Turn indicator signal			R	T		
Seat belt buckle switch signal			T	R		
Buzzer output signal			R	T		
Fuel level sensor signal	R		T			
Malfunction indicator lamp signal	T		R			
ASCD SET lamp signal	T		R			
ASCD operation signal	T	R				
ASCD CRUISE lamp signal	T		R			
Overdrive cancel signal	T	R				
Output shaft revolution signal	R	T				
Turbine revolution signal	R	T				
Front wiper request signal				T		R
Front wiper stop position signal				R		T
Rear window defogger switch signal				T		R
Rear window defogger control signal	R					T
Manual mode signal		R	T			
Not manual mode signal		R	T			
Manual mode shift up signal		R	T			
Manual mode shift down signal		R	T			
Manual mode indicator signal		T	R			
Hood switch signal				R		T
Theft warning horn request signal				T		R
Horn chirp signal				T		R
ABS warning lamp signal			R		T	
TCS OFF indicator lamp signal			R		T	
SLIP indicator lamp signal			R		T	
Brake (EBD) warning lamp signal			R		T	

TYPE 2/TYPE3

System diagram

- Type2

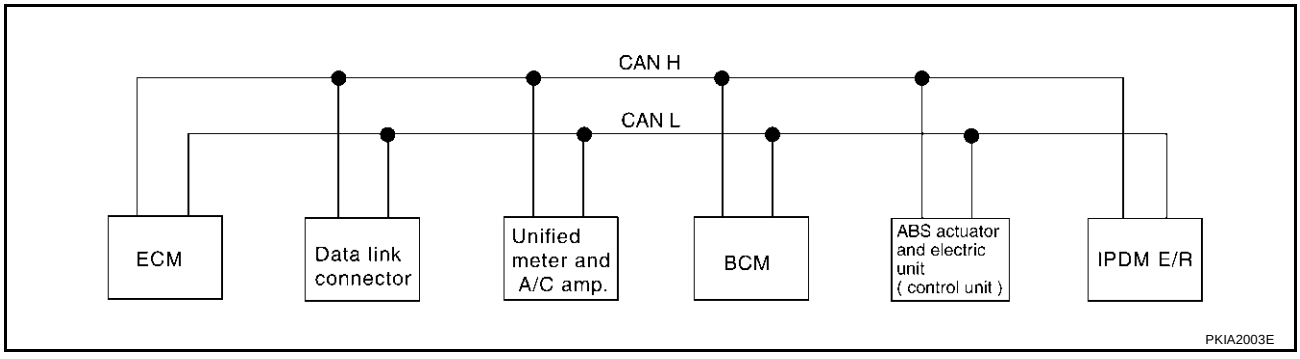

- Type3

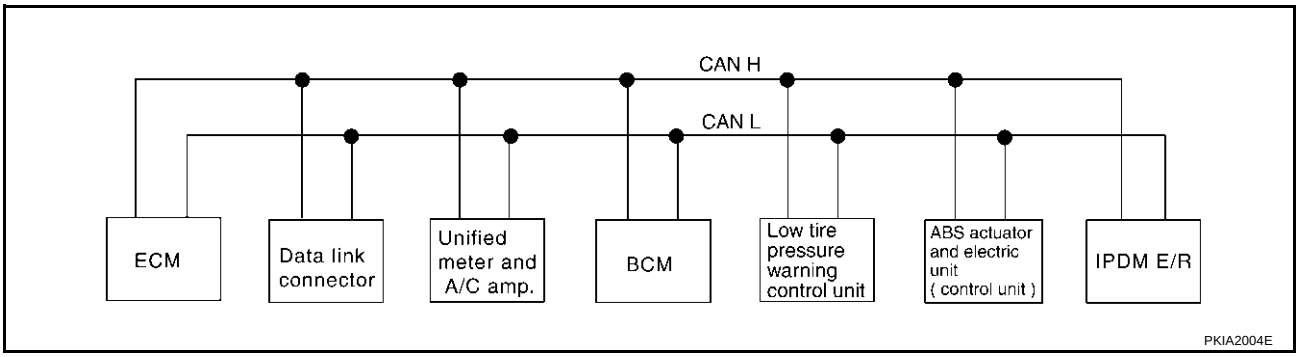

Input/output signal chart

T: Transmit R: Receive

Signals	ECM	Unified meter and A/C amp.	BCM	Low tire pressure warning control unit	ABS actuator and electric unit (control unit)	IPDM E/R
Engine speed signal	T	R			R	
Engine coolant temperature signal	T	R				
Accelerator pedal position signal	T				R	
Fuel consumption monitor signal	T	R				
Air conditioner switch signal	R		T			
A/C compressor request signal	T					R
A/C compressor feedback signal	T	R				
Blower fan motor switch signal	R		T			
Cooling fan speed request signal	T					R
Position lights request signal			R	T		R
Low beam request signal			T			R
Low beam status signal	R					T
High beam request signal		R	T			R
High beam status signal	R					T
Vehicle speed signal		R			T	
	R	T	R	R		
Sleep request 1 signal		R	T			
Sleep request 2 signal			T			R
Wake up request 1 signal		R	T			
Door switch signal		R	T			R
Turn indicator signal		R	T			
Seat belt buckle switch signal		T	R			
Buzzer output signal		R	T			
Fuel level sensor signal	R	T				
Malfunction indicator lamp signal	T	R				
ASCD SET lamp signal	T	R				
ASCD CRUISE lamp signal	T	R				
Front wiper request signal			T			R
Front wiper stop position signal			R			T
Rear window defogger switch signal			T			R

Signals	ECM	Unified meter and A/C amp.	BCM	Low tire pressure warning control unit	ABS actuator and electric unit (control unit)	IPDM E/R
Rear window defogger control signal	R					T
Hood switch signal			R			T
Theft warning horn request signal			T			R
Horn chirp signal			T			R
Tire pressure signal		R		T		
ABS warning lamp signal		R			T	
Brake (EBD) warning lamp signal		R			T	

TYPE 4/TYPE5

System diagram

- Type4

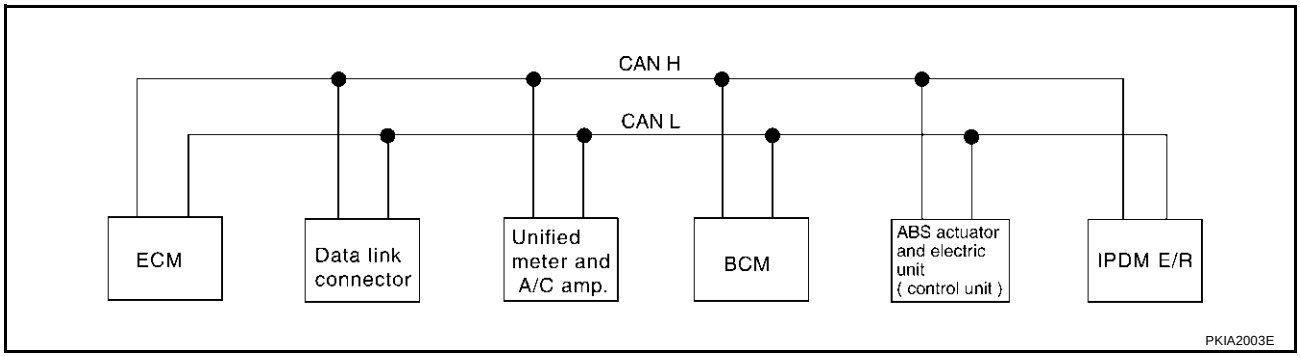

- Type5

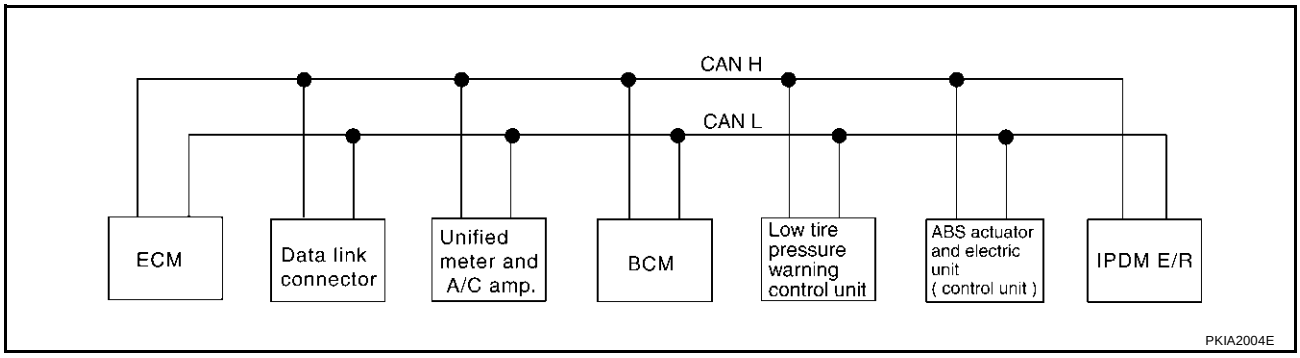

Input/output signal chart

T: Transmit R: Receive

Signals	ECM	Unified meter and A/C amp.	BCM	Low tire pressure warning control unit	ABS actuator and electric unit (control unit)	IPDM E/R
Engine speed signal	T	R			R	
Engine coolant temperature signal	T	R				
Accelerator pedal position signal	T				R	
Fuel consumption monitor signal	T	R				
Air conditioner switch signal	R		T			
A/C compressor request signal	T					R
A/C compressor feedback signal	T	R				
Blower fan motor switch signal	R		T			

Signals	ECM	Unified meter and A/C amp.	BCM	Low tire pressure warning control unit	ABS actuator and electric unit (control unit)	IPDM E/R
Cooling fan speed request signal	T					R
Position lights request signal		R	T			R
Low beam request signal			T			R
Low beam status signal	R					T
High beam request signal		R	T			R
High beam status signal	R					T
Vehicle speed signal		R			T	
	R	T	R	R		
Sleep request 1 signal		R	T			
Sleep request 2 signal			T			R
Wake up request 1 signal		R	T			
Door switch signal		R	T			R
Turn indicator signal		R	T			
Seat belt buckle switch signal		T	R			
Buzzer output signal		R	T			
Fuel level sensor signal	R	T				
Malfunction indicator lamp signal	T	R				
ASCD SET lamp signal	T	R				
ASCD CRUISE lamp signal	T	R				
Front wiper request signal			T			R
Front wiper stop position signal			R			T
Rear window defogger switch signal			T			R
Rear window defogger control signal	R					T
Hood switch signal			R			T
Theft warning horn request signal			T			R
Horn chirp signal			T			R
Tire pressure signal		R		T		
ABS warning lamp signal		R			T	
TCS OFF indicator lamp signal		R			T	
SLIP indicator lamp signal		R			T	
Brake (EBD) warning lamp signal		R			T	

TYPE 6/TYPE7

System diagram

- Type6

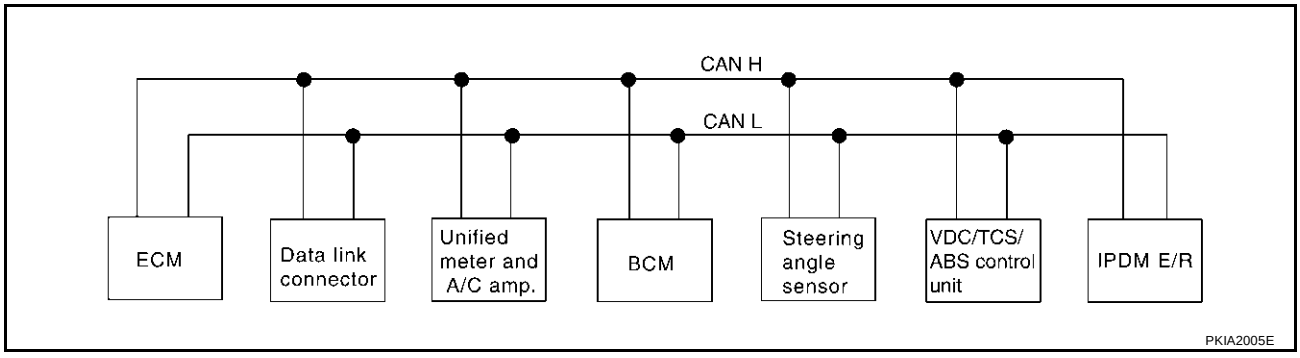

- Type7

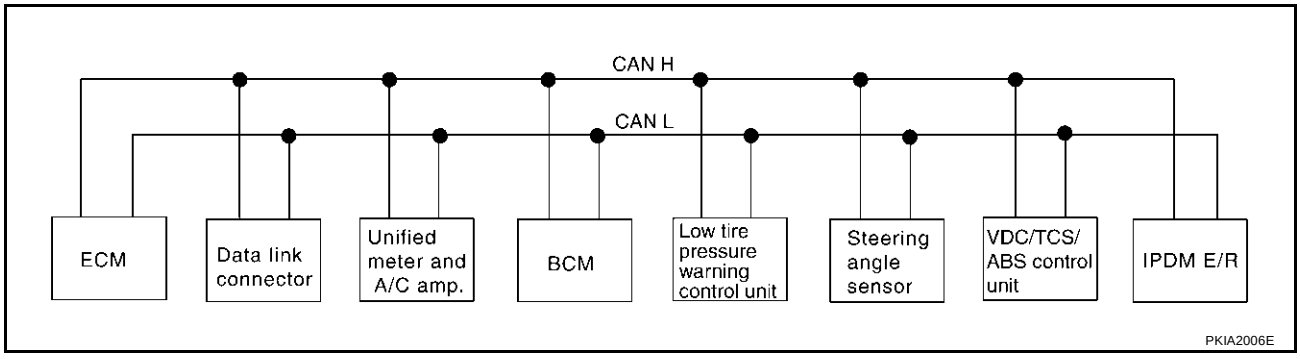

Input/output signal chart

T: Transmit R: Receive

Signals	ECM	Unified meter and A/C amp.	BCM	Low tire pressure warning control unit	Steering angle sensor	VDC/TCS/ ABS control unit	IPDM E/R
Engine speed signal	T	R				R	
Engine coolant temperature signal	T	R					
Accelerator pedal position signal	T					R	
Fuel consumption monitor signal	T	R					
Air conditioner switch signal	R		T				
A/C compressor request signal	T						R
A/C compressor feedback signal	T	R					
Blower fan motor switch signal	R		T				
Cooling fan speed request signal	T						R
Position lights request signal		R	T				R
Low beam request signal			T				R
Low beam status signal	R						T
High beam request signal		R	T				R
High beam status signal	R						T
Vehicle speed signal		R				T	
	R	T	R	R			
Sleep request 1 signal		R	T				
Sleep request 2 signal			T				R
Wake up request 1 signal		R	T				

Signals	ECM	Unified meter and A/C amp.	BCM	Low tire pressure warning control unit	Steering angle sensor	VDC/TCS/ ABS control unit	IPDM E/R
Door switch signal		R	T				R
Turn indicator signal		R	T				
Seat belt buckle switch signal		T	R				
Buzzer output signal		R	T				
Fuel level sensor signal	R	T					
Malfunction indicator signal	T	R					
ASCD SET lamp signal	T	R					
ASCD CRUISE lamp signal	T	R					
Front wiper request signal			T				R
Front wiper stop position signal			R				T
Rear window defogger switch signal			T				R
Rear window defogger control signal	R						T
Hood switch signal			R				T
Theft warning horn request signal			T				R
Horn chirp signal			T				R
Steering angle sensor signal					T	R	
Tire pressure signal		R		T			
ABS warning lamp signal		R				T	
VDC OFF indicator lamp signal		R				T	
SLIP indicator lamp signal		R				T	
Brake (EBD) warning lamp signal		R				T	

Schematic

AIS0014S

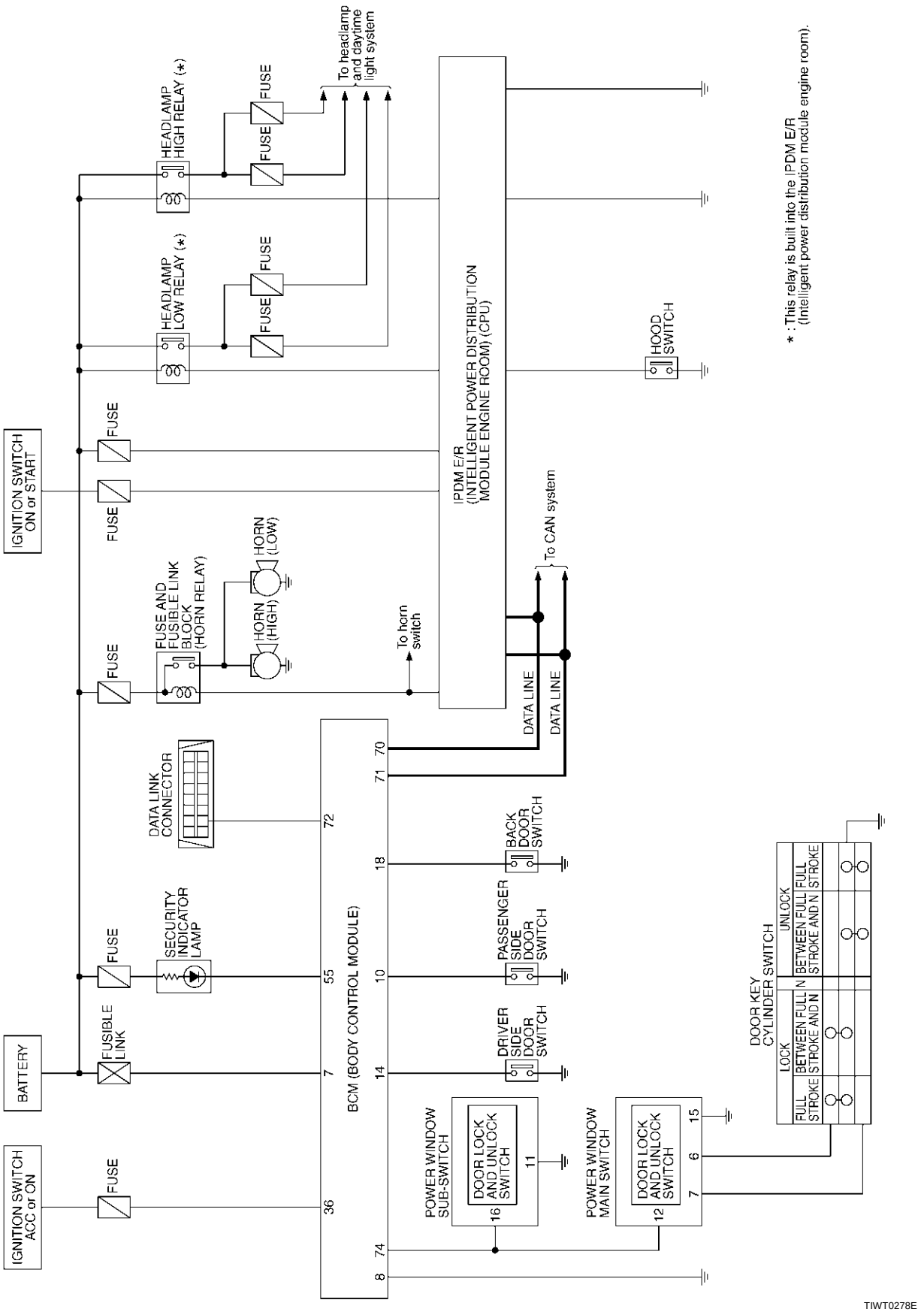

Wiring Diagram -VEHSEC-

AIS0014T

FIG. 1

BL-VEHSEC-01

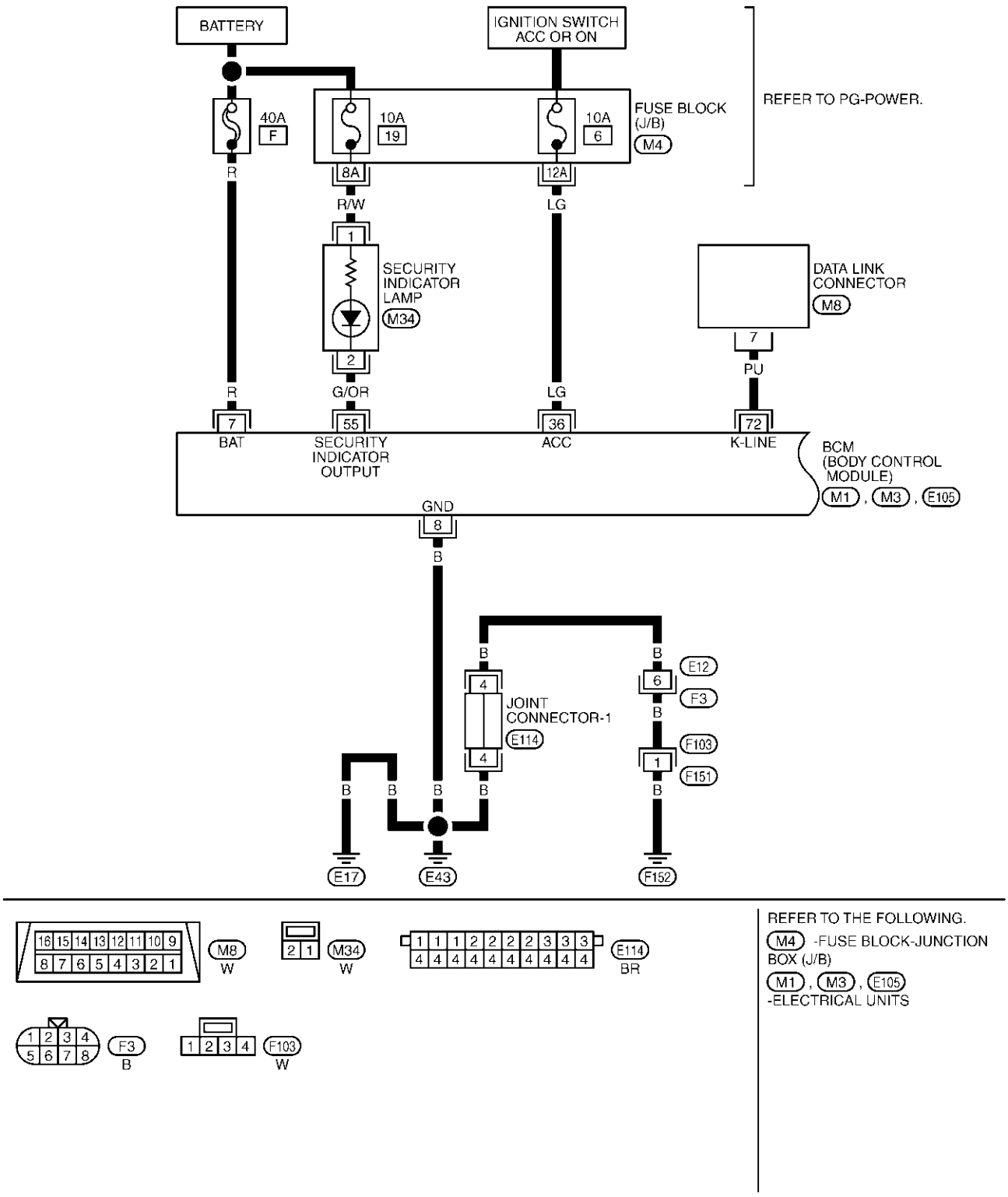

FIG. 2

BL-VEHSEC-02

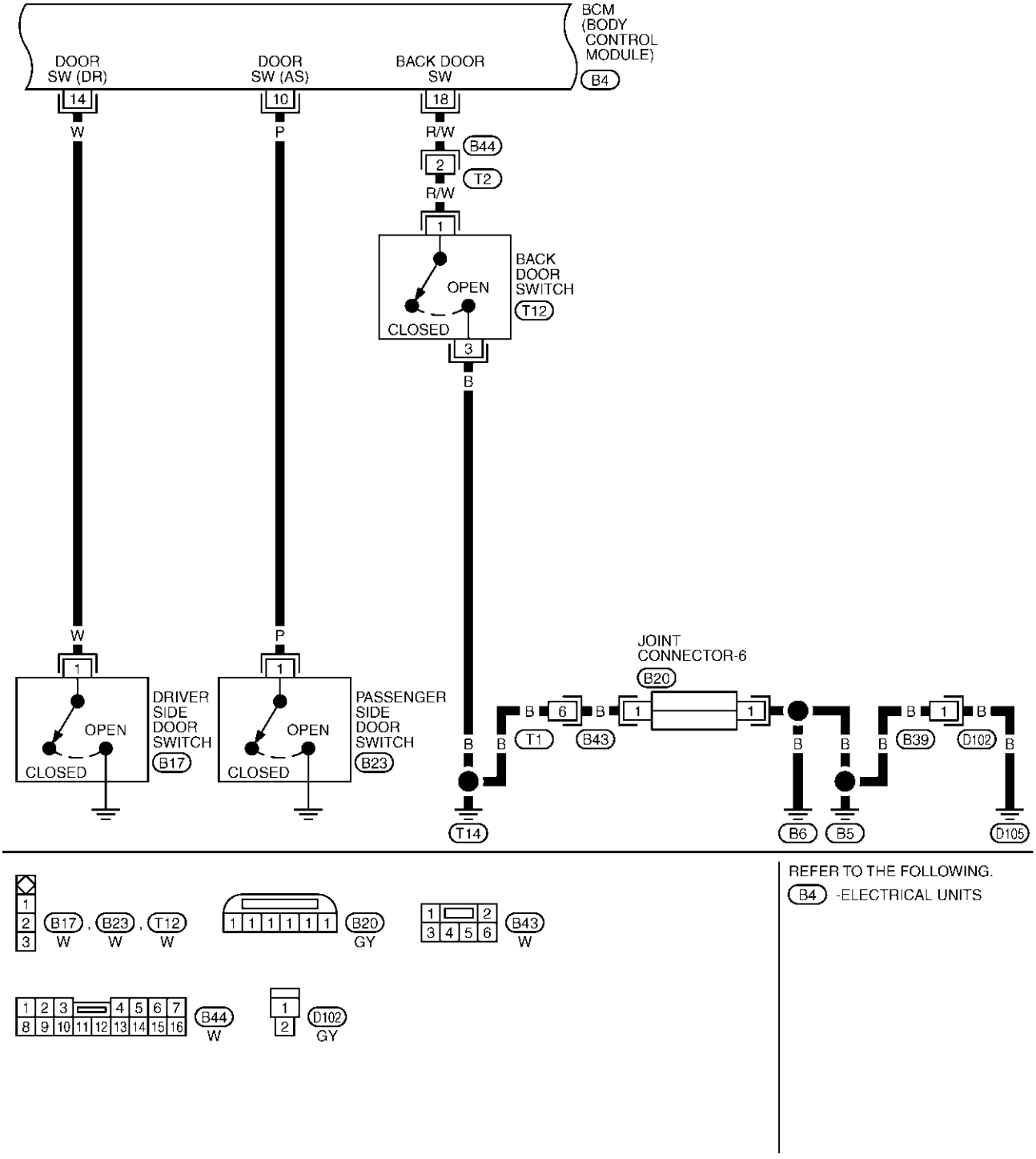

FIG. 3

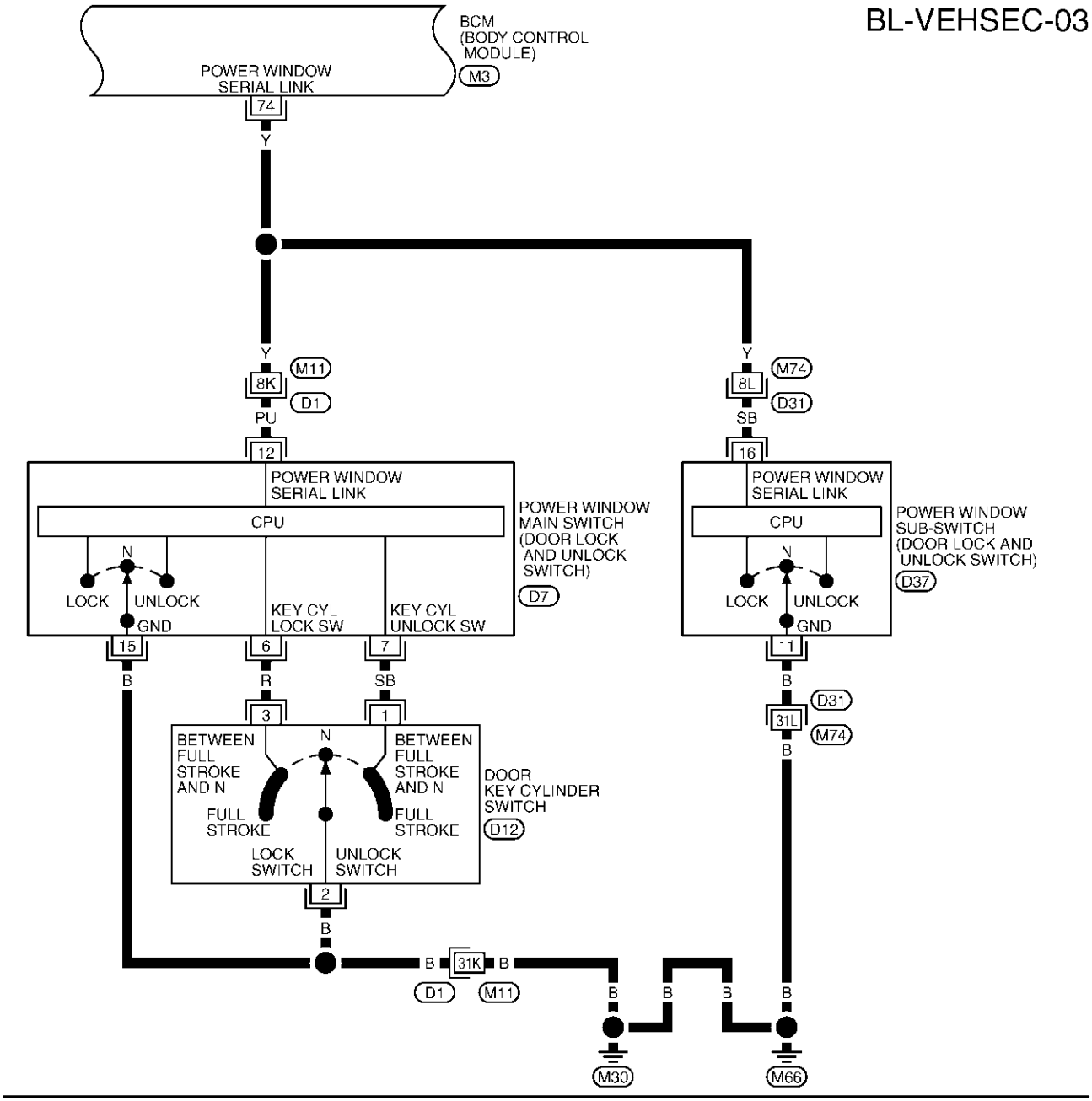
BL-VEHSEC-03
BCM
(BODY CONTROL
MODULE)
M3
POWER WINDOW
SERIAL LINK
74
Y
Y
8K
M11
D1
PU
12
Y
8L
M74
D31
SB
16
POWER WINDOW
SERIAL LINK
CPU
N
LOCK
UNLOCK
GND
KEY CYL
LOCK SW
KEY CYL
UNLOCK SW
POWER WINDOW
MAIN SWITCH
(DOOR LOCK
AND UNLOCK
SWITCH)
D7
POWER WINDOW
SERIAL LINK
CPU
N
LOCK
UNLOCK
GND
POWER WINDOW
SUB-SWITCH
(DOOR LOCK AND
UNLOCK SWITCH)
D37
15
6
7
11
B
R
SB
B
3
1
D31
31L
M74
B
BETWEEN
FULL
STROKE
AND N
N
BETWEEN
FULL
STROKE
AND N
FULL
STROKE
FULL
STROKE
LOCK
SWITCH
UNLOCK
SWITCH
DOOR
KEY CYLINDER
SWITCH
D12
2
B
B
31K
B
D1
M11
B
B
B
B
M30
M66
7 6 5 4 3 2 1
16 15 14 13 12 11 10 9 8
D7 , D37
W W
3 2 1
D12
BR
REFER TO THE FOLLOWING.
D1 , D31 -SUPER MULTIPLE
JUNCTION (SMJ)
M3 -ELECTRICAL UNITS
TIWT0281E

FIG. 4

BL-VEHSEC-04

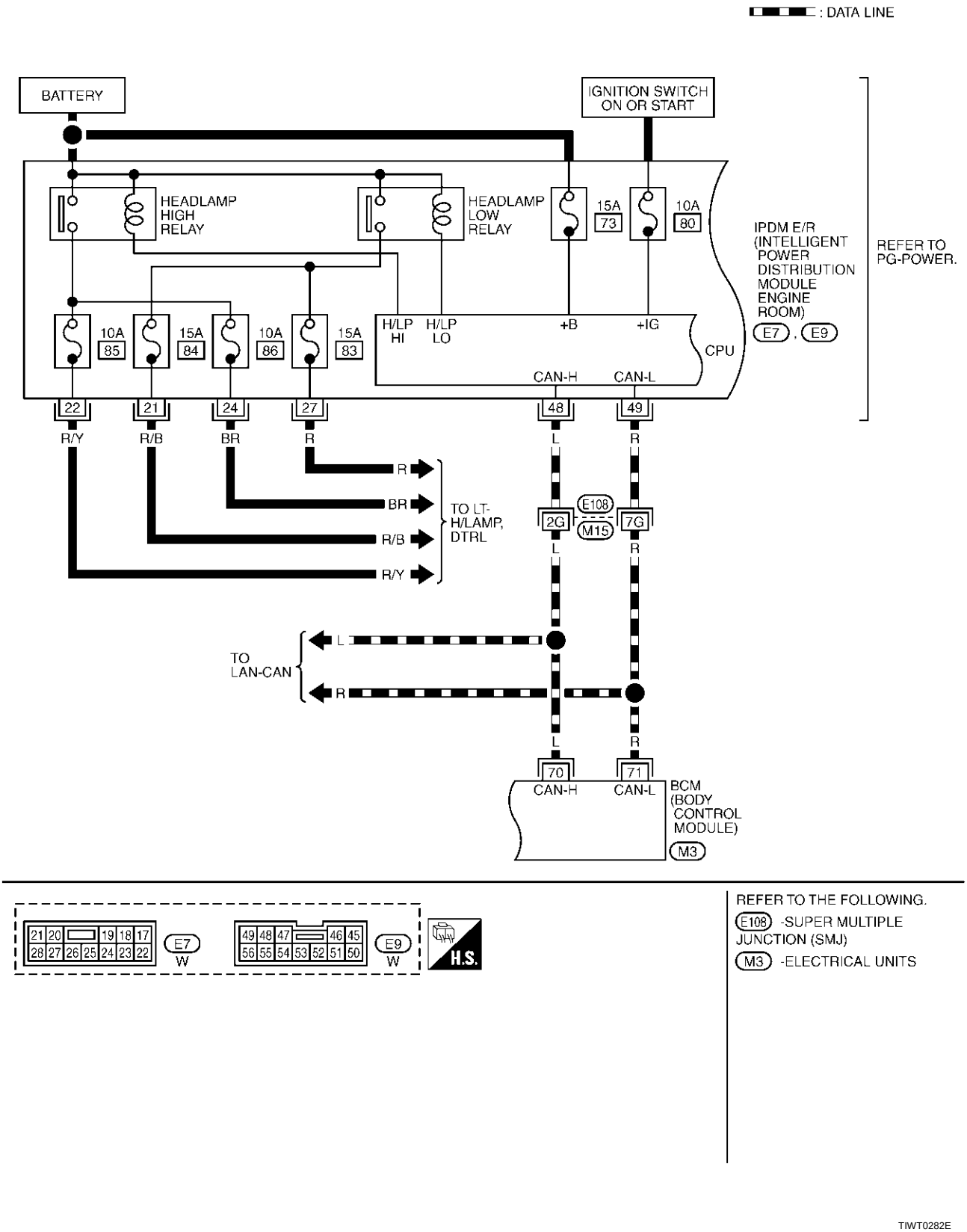

FIG. 5

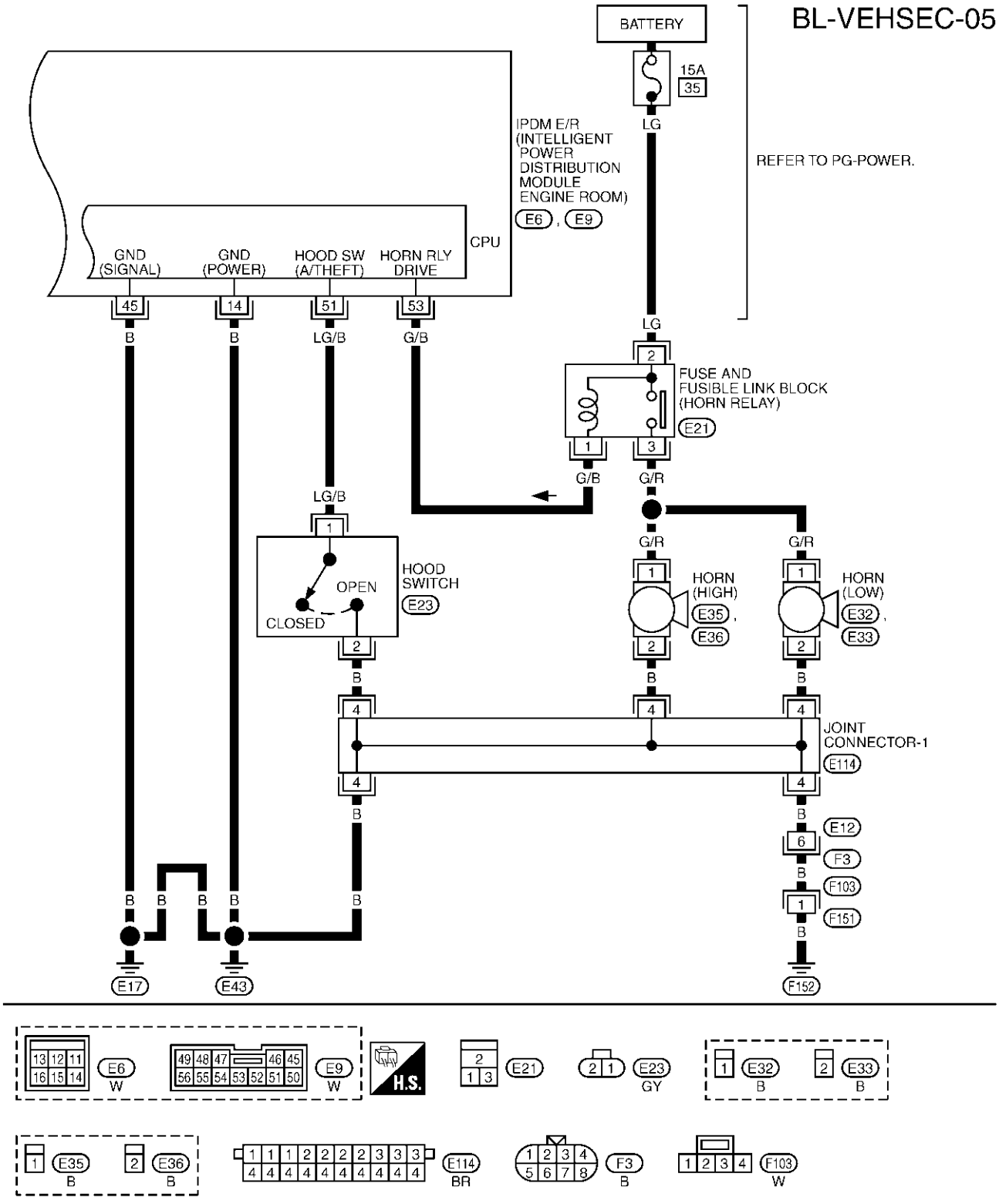
BL-VEHSEC-05
BATTERY
15A
35
LG
REFER TO PG-POWER.
IPDM E/R
(INTELLIGENT
POWER
DISTRIBUTION
MODULE
ENGINE ROOM)
E6 , E9
CPU
GND
(SIGNAL)
GND
(POWER)
HOOD SW
(A/THEFT)
HORN RLY
DRIVE
45
14
51
53
B
B
LG/B
G/B
LG
FUSE AND
FUSIBLE LINK BLOCK
(HORN RELAY)
E21
G/B
G/R
LG/B
HOOD
SWITCH
E23
OPEN
CLOSED
G/R
G/R
HORN
(HIGH)
E35 ,
E36
HORN
(LOW)
E32 ,
E33
B
B
B
JOINT
CONNECTOR-1
E114
E12
F3
F103
F151
E17
E43
F152
E6
W
E9
W
H.S.
E21
E23
GY
E32
B
E33
B
E35
B
E36
B
E114
BR
F3
B
F103
W
TIWT0283E

Terminals and Reference Value for BCM

AIS0014U

TERMINAL	WIRE COLOR	ITEM	CONDITION	VOLTAGE (Approx.)
7	R	Power source (Fusible link)	—	Battery voltage
8	B	Ground	—	0V
10	P	Passenger side door switch	ON (Open) → OFF (Closed)	0V → 5
14	W	Driver side door switch	ON (Open) → OFF (Closed)	0V → 5
18	R/W	Back door switch	ON (Open) → OFF (Closed)	0V → Battery voltage*
36	LG	ACC power supply (ACC or ON)	Ignition switch (ACC position)	Battery voltage
55	G/OR	Security indicator lamp	Goes off → Illuminates (Every 2.4 seconds)	Battery voltage → 0V
70	L	CAN-H	—	—
71	R	CAN-L	—	—
72	PU	Data link connector	—	—
74	Y	Power window switch (Serial link)	Driver side door and passenger side door are closed. (Each door switch is OFF)	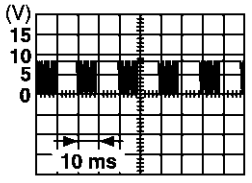 PIIA1297E

*: When interior lamp battery saver control is in OFF. →Approx. 5V

Terminals and Reference Value for IPDM E/R

AIS0014V

TERMINAL	WIRE COLOR	ITEM	CONDITION	VOLTAGE (Approx.)
14	B	Ground	—	0V
45	B	Ground	—	0V
48	L	CAN-H	—	—
49	R	CAN-L	—	—
51	LG/B	Hood switch	ON (Open) → OFF (closed)	0V → Battery voltage
53	G/B	Horn relay	ON → OFF	0V → Battery voltage

CONSULT-II Function

AIS0014W

CONSULT-II BASIC OPERATION PROCEDURE

CAUTION:

If CONSULT-II is used with no connection of CONSULT-II CONVERTER, malfunctions might be detected in self-diagnosis depending on control unit which carry out CAN communication.

1. Turn ignition switch “OFF”.
2. Connect CONSULT-II and CONSULT-II CONVERTER to data link connector.

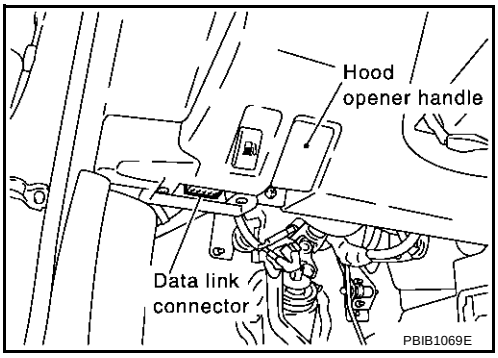

3. Turn ignition switch “ON”.
4. Touch “START(NISSAN BASED VHCL)”.

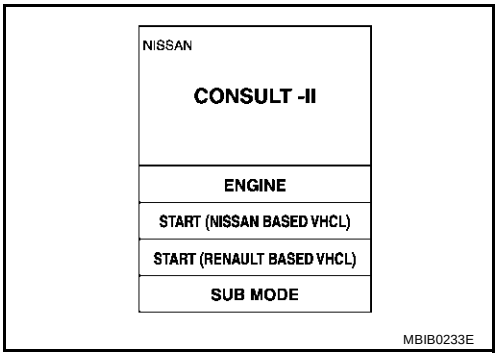

5. Touch “BCM”.
   If “BCM” is not indicated, go to GI-39, "CONSULT-II Data Link Connector (DLC) Circuit" .

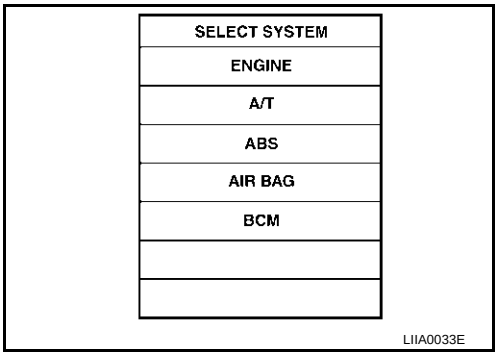

6. Touch “THEFT ALM”.

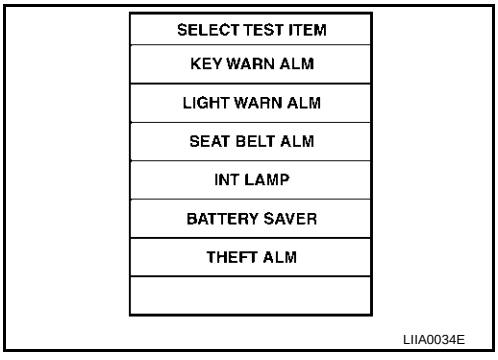

7. Select diagnosis mode.
   “DATE MONITOR”, “ACTIVE TEST” and “WORK SUPPORT”

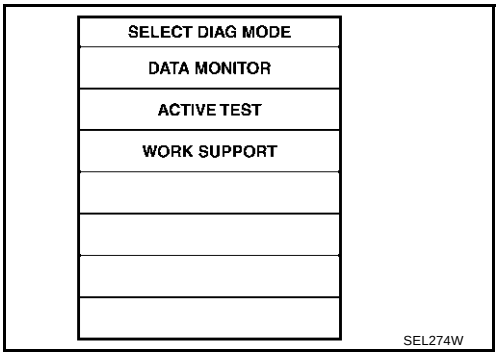

CONSULT-II APPLICATION ITEM

Data Monitor

Monitored Item	Description
IGN ON SW	Indicates [ON/OFF] condition of ignition switch.
ACC ON SW	Indicates [ON/OFF] condition of ignition switch in ACC position.
KEY CYL LK SW	Indicates [ON/OFF] condition of lock signal from key cylinder switch.
KEY CYL UN SW	Indicates [ON/OFF] condition of unlock signal from key cylinder switch.
DOOR SW-DR	Indicates [ON/OFF] condition of driver side door switch.
DOOR SW-AS	Indicates [ON/OFF] condition of passenger side door switch.
BACK DOOR SW	Indicates [ON/OFF] condition of back door switch.
TRUNK OPNR SW	This is displayed even when it is not equipped.
TRUNK OPN MNTR	This is displayed even when it is not equipped.
TRUNK KEY SW	This is displayed even when it is not equipped.
DOOR SW-RR	This is displayed even when it is not equipped.
HOOD SW	Indicates [ON/OFF] condition of hood switch.
LOCK SW DR/AS	Indicates [ON/OFF] condition of lock signal from driver and passenger side door lock/unlock switch.
UNLK SW DR/AS	Indicates [ON/OFF] condition of unlock signal from driver and passenger side door lock/unlock switch.
LK BUTTON/SIG	Indicates [ON/OFF] condition of lock signal from key fob.
UN BUTTON/SIG	Indicates [ON/OFF] condition of unlock signal from key fob.
TRUNK BTN/SIG	Indicates [ON/OFF] condition of back door open signal from key fob.

Active Test

Test Item	Description
THEFT IND	This test is able to check security indicator lamp operation. The lamp will be turned on when “ON” on CONSULT-II screen is touched.
HEAD LAMP	This test is able to check vehicle security lamp (headlamp alarm) operation. The headlamps will be activated for 0.5 seconds after “ON” on CONSULT-II screen is touched.
HORN	This test is able to check vehicle security horn (horn alarm) operation. The horns will be activated for 0.5 seconds after “ON” on CONSULT-II screen is touched.

Work Support

Test Item	Description
SECURITY ALARM SET	This mode is able to confirm and change security alarm ON-OFF setting.
THEFT ALM TRG	The switch which triggered vehicle security alarm is recorded. This mode is able to confirm and erase the record of vehicle security alarm. The trigger data can be erased by touching “CLEAR” on CONSULT-II screen.

Trouble Diagnosis

AIS0014X

WORK FLOW

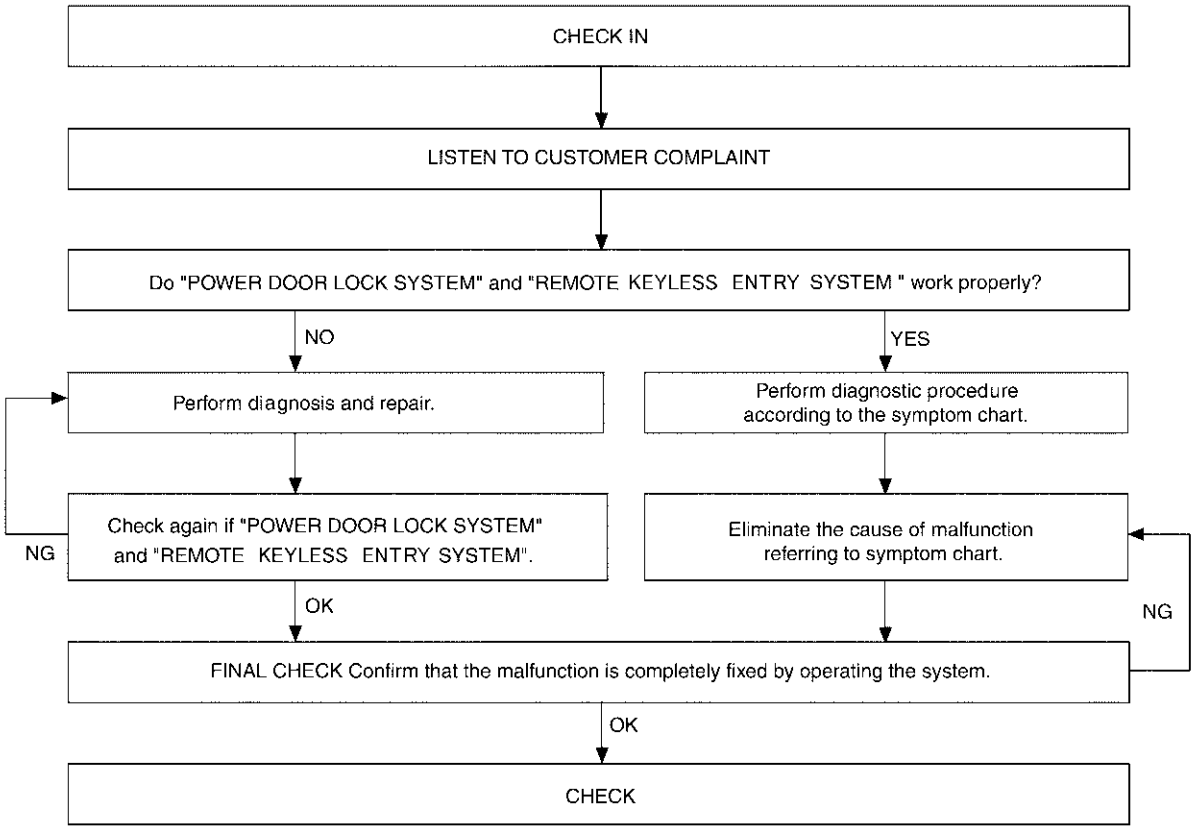

LIIA0123E

- “POWER DOOR LOCK SYSTEM” Diagnosis; refer to BL-28, "Work Flow" .
- “REMOTE KEYLESS ENTRY” Diagnosis; refer to BL-67, "Work Flow" .

Preliminary Check

AIS0014Y

The system operation is canceled by turning ignition switch to “ACC” at any step between START and ARMED in the following flow chart.

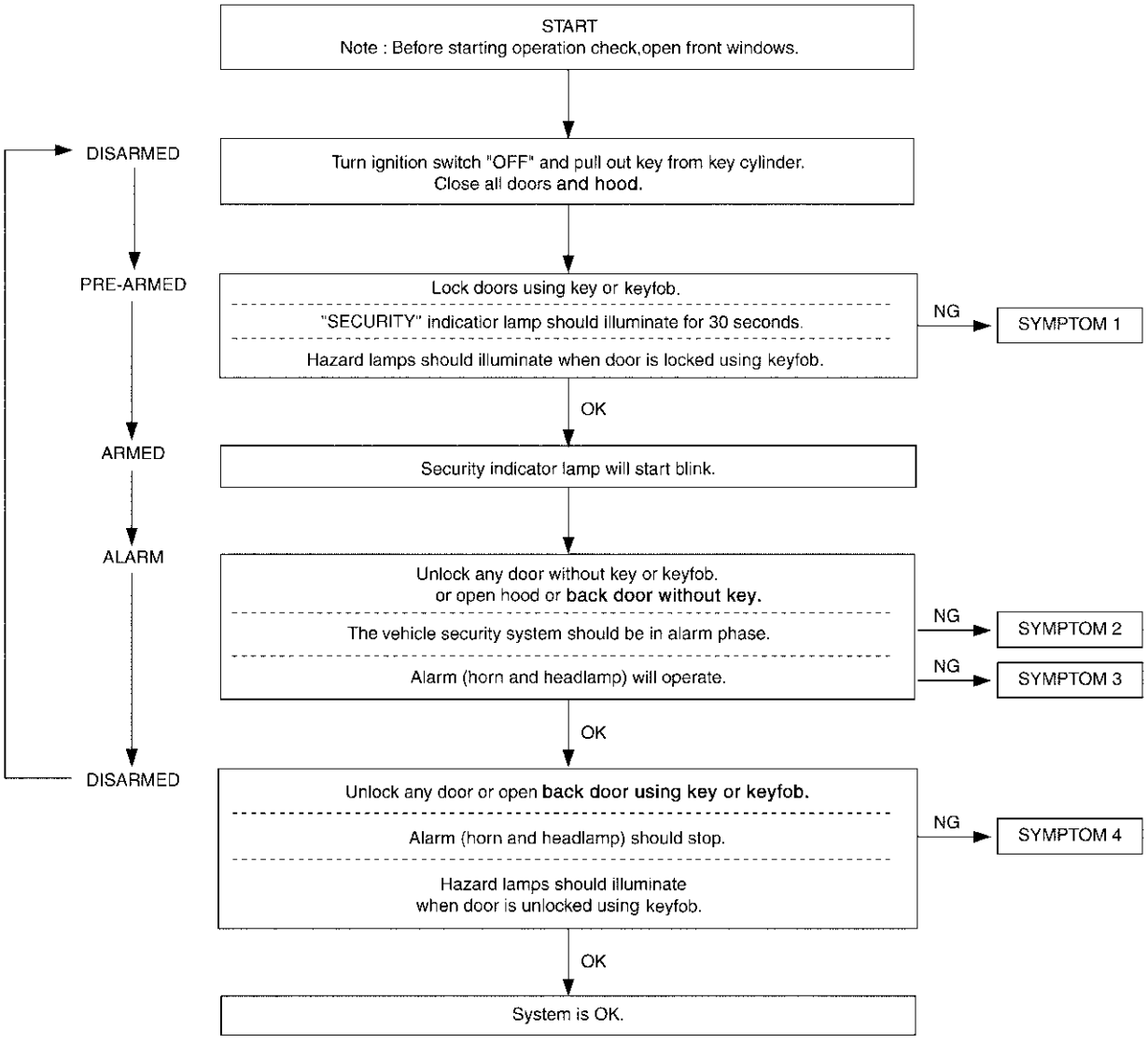

PIIA2494E

After performing preliminary check, go to symptom chart. Refer to BL-113, "Symptom Chart" .

Symptom Chart

AIS0014Z

PROCEDURE / SYMPTOM			Diagnostic procedure	Reference page
1	Vehicle security system cannot be set by ····	Door switch	Diagnostic Procedure 1 (Door, hood and back doors witch check)	BL-114
		Lock/unlock switch	Diagnostic Procedure 6 (Door lock/unlock switch check)	BL-120
		Door outside key	Diagnostic Procedure 3 (Door key cylinder switch check)	BL-119
		Key fob	Check remote keyless entry system function.	BL-49
		BCM	If the above systems are “OK”, replace BCM.	BCS-20
	Security indicator does not turn “ON”.		Diagnostic Procedure 2 (Security indicator lamp check)	BL-118
			If the above systems are “OK”, replace BCM.	BCS-20
2	*1 Vehicle security system does not alarm when ….	Any door is opened.	Diagnostic Procedure 1 (Door, hood and back door switch check)	BL-114
			If the above systems are “OK”, replace BCM.	BCS-20
3	Vehicle security alarm does not activate.	Horn alarm	Diagnostic Procedure 4 (Vehicle security horn alarm check)	BL-119
			If the above systems are “OK”, replace BCM.	BCS-20
		Headlamp alarm	Diagnostic Procedure 5 (Vehicle security headlamp alarm check)	BL-119
			If the above systems are “OK”, replace BCM.	BCS-20
4	Vehicle security system cannot be canceled by ….	Door outside key	Diagnostic Procedure 3 (Door key cylinder switch check)	BL-119
		Key fob	Check remote keyless entry system function.	BL-49
			If the above systems are “OK”, replace BCM.	BCS-20

*1: Make sure the system is in the armed phase.

Diagnostic Procedure 1

AIS00150

1 – 1 DOOR SWITCH CHECK

Driver side door switch and passenger side door switch check

1. CHECK DOOR SWITCH INPUT SIGNAL

With CONSULT-II

Check door switches (“DOOR SW-DR” and “DOOR SW-AS”) in “DATA MONITOR” mode with CONSULT-II.

Monitor item	Condition	
DOOR SW-DR	OPEN	: ON
	CLOSE	: OFF
DOOR SW-AS	OPEN	: ON
	CLOSE	: OFF

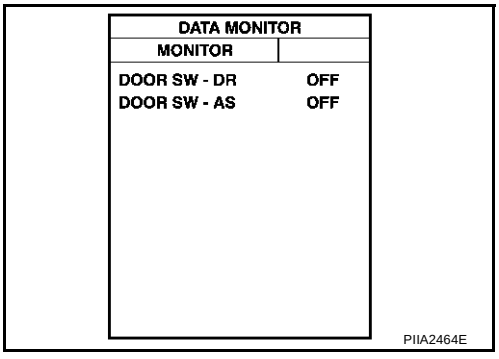

Without CONSULT-II

Check voltage between BCM connector and ground.

Item	Terminals (Wire color)			Condition	Voltage [V]
	(+)		(–)		
	Con-nector	Terminal (Wire color)			
Passenger side door switch	B4	10 (P)	Ground	OPEN	0
				CLOSE	Approx. 5
Driver side door switch		14 (W)		OPEN	0
				CLOSE	Approx. 5

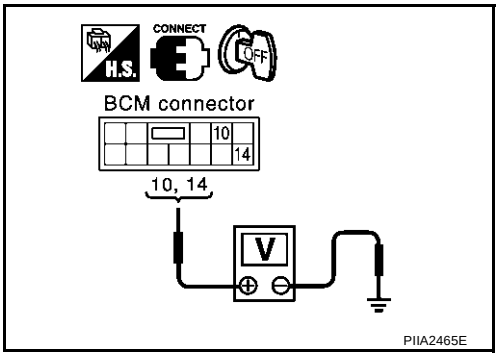

OK or NG

OK >> Door switch is OK.
NG >> GO TO 2

2. CHECK DOOR SWITCH

1. Turn ignition switch OFF.
2. Disconnect door switch and BCM connector.
3. Check continuity between door switch connector B17, B23 terminal 1 (P, W) and BCM connector B4 terminal 10 (P), 14 (W).

Passenger side door

1 (P) - 10 (P) :Continuity should exist.

Driver side door

1 (W) - 14 (W) :Continuity should exist.

4. Check continuity between door switch connector B17, B23 terminal 1(P, W) and ground.

Each door switch

1 (P, W) - Ground :Continuity should not exist.

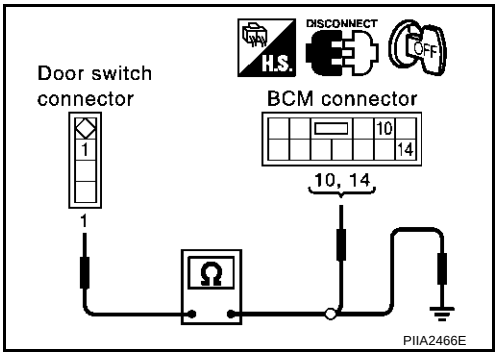

OK or NG

OK >> Check door switch.
NG >> Repair or replace door switch harness.

Back door switch check

1. CHECK BACK DOOR SWITCH INPUT SIGNAL

1. Turn ignition switch OFF.
2. Check voltage between BCM connector and ground.

Item	Terminals (Wire color) (+) Con-nector	Terminal (Wire color)	(–)	Condition	Voltage [V]
Back door switch	B4	18 (R/W)	Ground	OPEN	0
				CLOSE	Approx. 12*

*: When interior lamp battery saver control is in OFF. →Approx. 5V

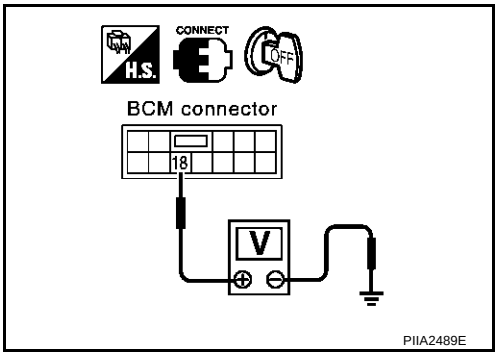

OK or NG

OK >> Back door switch is OK.
NG >> GO TO 2

2. CHECK BACK DOOR SWITCH HARNESS

1. Turn ignition switch OFF.
2. Disconnect back door switch and BCM connector.
3. Check continuity between back door switch connector T12 terminal 1 (R/W) and BCM connector B4 terminal 18 (R/W).

   Back door

   1 (R/W) - 18 (R/W) :Continuity should exist.

4. Check continuity between back door switch connector T12 terminal 1(R/W) and ground.

   Back door switch

   1 (R/W) - Ground :Continuity should not exist.

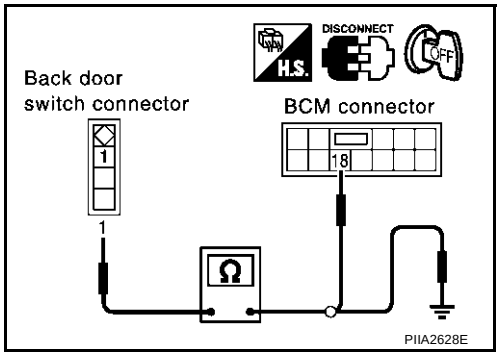

OK or NG

OK >> GO TO 3
NG >> Replace back door switch harness.

3. CHECK BACK DOOR SWITCH

1. Turn ignition switch OFF.
2. Disconnect door switch and BCM connector.
3. Check continuity between door switch connector T12 terminal 3 (B) and ground.

   Back door

   3 (B) - Ground :Continuity should exist.

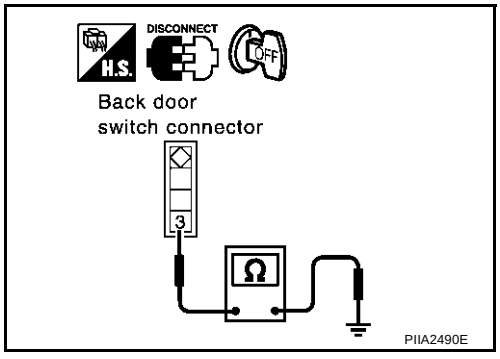

OK or NG

OK >> Check back door switch.
NG >> Repair or replace back door switch harness.

1 – 2 HOOD SWITCH CHECK

First perform the "SELF-DIAG RESULTS" in "BCM" with CONSULT-II, then perform the trouble diagnosis of malfunction system indicated "SELF-DIAG RESULTS" of "BCM". Refer to BCS-18, "CAN Communication Inspection Using CONSULT-II (Self-Diagnosis)" .

1. CHECK HOOD SWITCH

Check hood switch and hood fitting condition.

OK or NG

OK >> GO TO 2.
NG >> Adjust installation of hood switch.

2. CHECK HOOD SWITCH INPUT SIGNAL

With CONSULT-II

- Check “HOOD SW” in “DATA MONITOR” mode with CONSULT-II.

Monitor item	Condition	
HOOD SW	Hood open	: ON
	Hood closed	: OFF

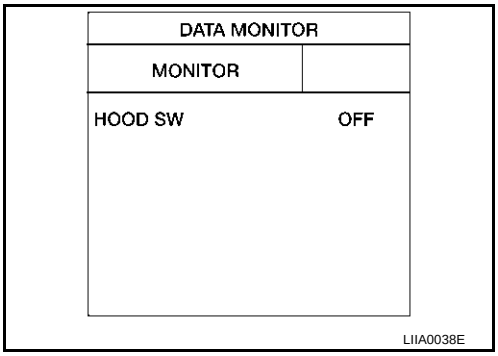

Without CONSULT-II

- Check voltage between IPDM E/R connector and ground.

Terminals (Wire color)			Condition	Voltage (V)
(+)		(–)		
Con-nector	Terminal (Wire color)			
E9	51 (LG/B)	Ground	Closed	Approx. 12
			Open	0

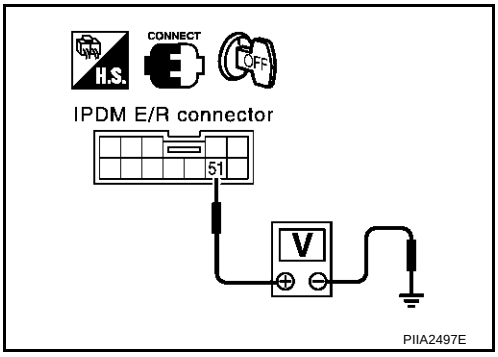

OK or NG

OK >> Hood switch is OK.
NG >> GO TO 3.

3. CHECK HOOD SWITCH HARNESS

1. Turn ignition switch OFF.
2. Disconnect IPDM E/R and hood switch connector.
3. Check continuity between hood switch connector E23 terminal 1 (LG/B) and IPDM E/R connector E9 terminal 51 (LG/B).

   1 (LG/B) - 51 (LG/B) : Continuity should exist.

4. Check continuity between hood switch connector E23 terminal 1(LG/B) and ground.

   1 (LG/B) - Ground : Continuity should not exist.

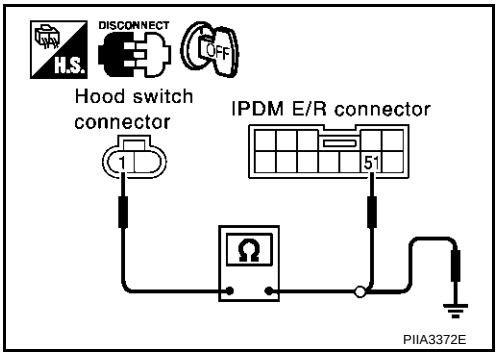

OK or NG

OK >> GO TO 4.
NG >> Repair or replace hood switch harness.

4. CHECK HOOD SWITCH GROUND CIRCUIT

Check continuity between hood switch connector E23 terminal 2 and ground.

Continuity should exist.

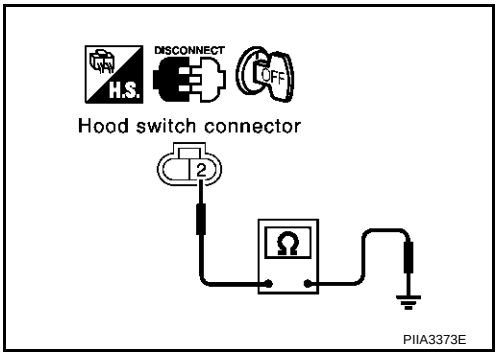

OK or NG

OK >> GO TO 5.
NG >> Repair or replace hood switch harness.

5. CHECK HOOD SWITCH

Check continuity between hood switch connector E23 terminals 1 and 2.

Terminals	Condition	Continuity
1 – 2	Pressed	No
	Released	Yes

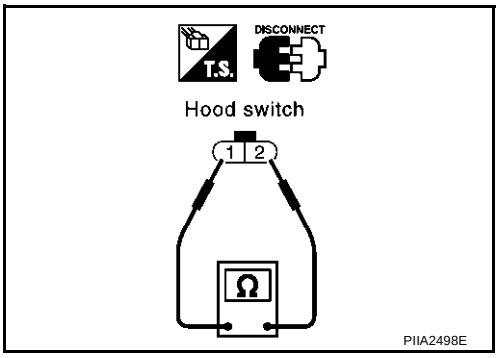

OK or NG

OK >> Replace IPDM E/U.
NG >> Replace hood switch.

Diagnostic Procedure 2

AIS00151

SECURITY INDICATOR LAMP CHECK

1. SECURITY INDICATOR LAMP ACTIVE TEST

With CONSULT-II

Check “THEFT IND” in “ACTIVE TEST” mode with CONSULT-II.

Perform operation shown on display.
Indicator lamp should illuminate.

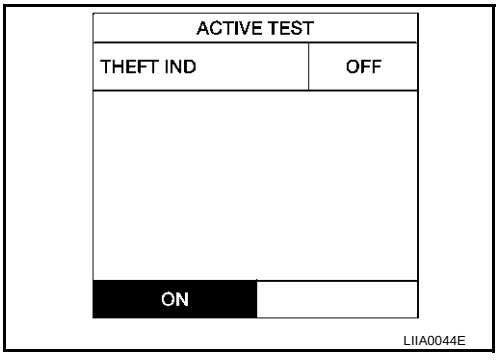

Without CONSULT-II

1. Disconnect BCM connector M3.
2. Check voltage between BCM connector M3 terminal 55 (G/OR) and ground.

Battery voltage should exist.

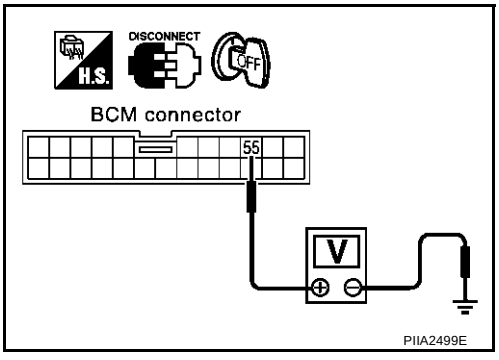

OK or NG

OK >> Security indicator lamp is OK.
NG >> GO TO 2.

2. CHECK POWER SUPPLY CIRCUIT FOR SECURITY INDICATOR LAMP

1. Disconnect security indicator lamp connector.
2. Check voltage between security indicator lamp connector M34 terminal 1 (R/W) and ground.

Battery voltage should exist.

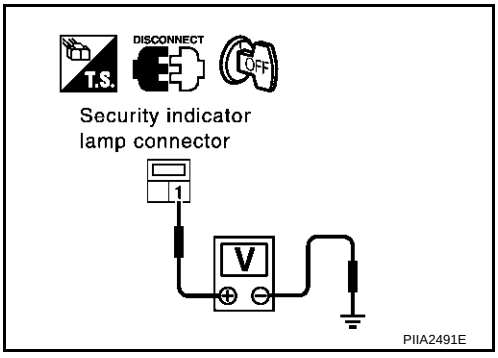

OK or NG

OK >> Check the following.
- Harness for open or short between security indicator lamp and BCM.
- Indicator lamp condition

NG >> Check the following.
- 10A fuse [No. 19, located in fuse block (J/B)]
- Harness for open or short between security indicator lamp and fuse

Diagnostic Procedure 3

AIS00152

DOOR KEY CYLINDER SWITCH CHECK

1. CHECK DOOR KEY CYLINDER SWITCH DRIVER SIDE OPERATION

Do doors lock/unlock when using the key?

YES or NO

YES >> Door key cylinder switch operation is OK.
NO >> Check door key cylinder switch circuit. Refer to BL-42, "Door Key Cylinder Switch Check" .

Diagnostic Procedure 4

AIS00153

VEHICLE SECURITY HORN ALARM CHECK

First perform the “SELF-DIAG RESULTS” in “BCM” with CONSULT-II, then perform the trouble diagnosis of malfunction system indicated “SELF-DIAG RESULTS” of “BCM”. Refer to BCS-18, "CAN Communication Inspection Using CONSULT-II (Self-Diagnosis)" .

1. CHECK HORN OPERATION

Check if horn sounds with horn switch.

Does horn operate?

Yes >> Check harness for open or short between IPDM E/R and horn relay.
No >> Check horn circuit. Refer to WW-55, "HORN" .

Diagnostic Procedure 5

AIS00154

VEHICLE SECURITY HEADLAMP ALARM CHECK

1. CHECK HEAD LAMP OPERATION

Does headlamp come on when turning lighting switch “ON”?

YES or NO

YES >> Headlamp alarm circuit is OK.
NO >> Check headlamp system. Refer to LT-7, "HEADLAMP (FOR USA) - XENON TYPE -" , LT-37, "HEADLAMP (FOR USA) - CONVENTIONAL TYPE -" , LT-66, "HEADLAMP (FOR CANADA) - XENON TYPE -" , LT-101, "HEADLAMP (FOR CANADA) - CONVENTIONAL TYPE -" .

Diagnostic Procedure 6

AIS00155

DOOR LOCK AND UNLOCK SWITCH CHECK

1. CHECK DOOR LOCK AND UNLOCK SWITCH INPUT SIGNAL

Do doors lock/unlock when using power window main switch (door lock and unlock switch) or power window sub-switch (door lock and unlock switch)?

YES or NO?

YES >> Door lock and unlock switch is OK.
NO >> Refer to BL-35, "Door Lock and Unlock Switch Check" .

NVIS (NISSAN VEHICLE IMMOBILIZER SYSTEM-NATS)

PFP:25386

Component Parts and Harness Connector Location

AIS00143

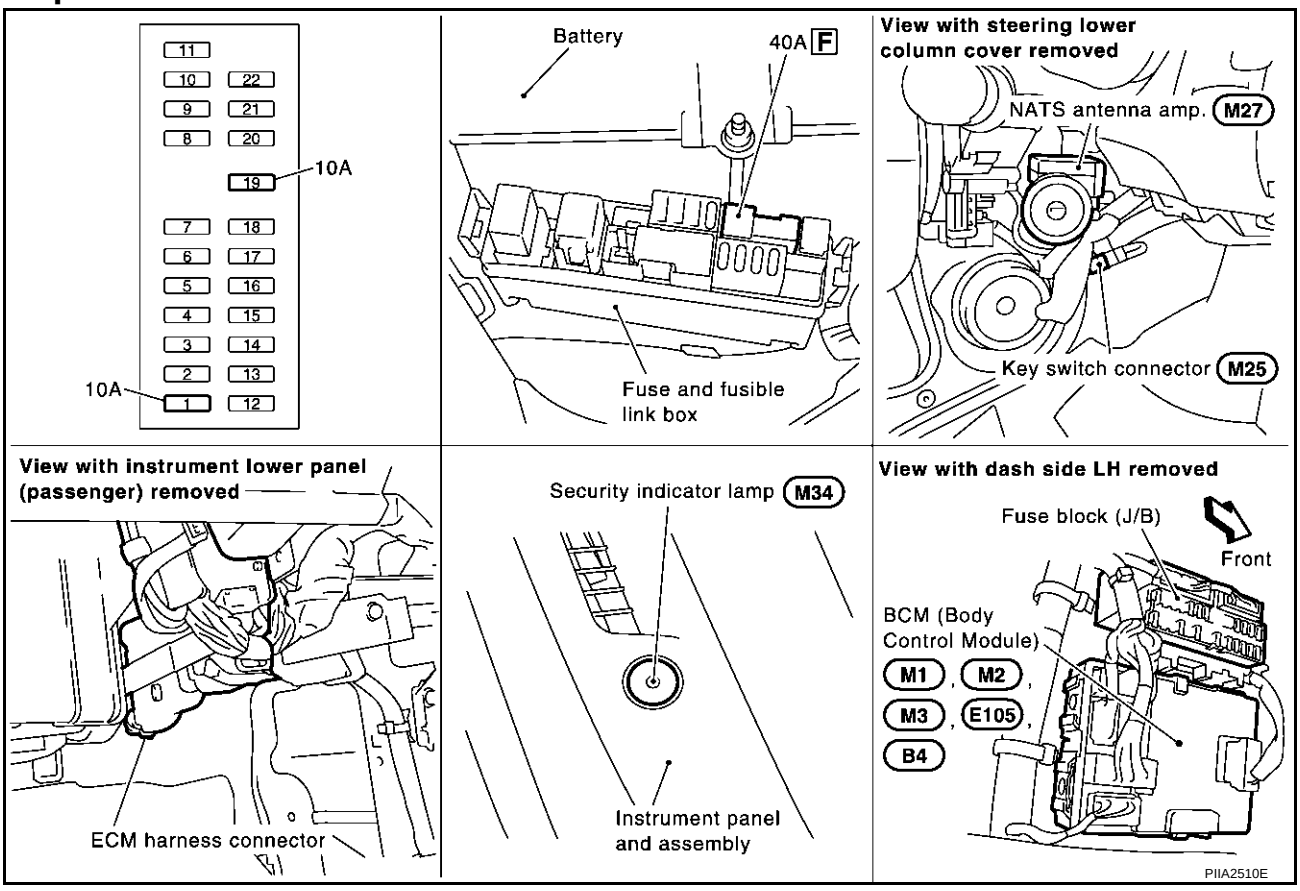

NOTE:
If customer reports a “No start” condition, request ALL KEYS to be brought to an NISSAN dealer in case of a NVIS (NATS) malfunction.

System Description

AIS00144

NVIS (Nissan Vehicle Immobilizer System-NATS) has the following immobilizer functions:

- Since only NVIS (NATS) ignition keys, whose ID nos. have been registered into the ECM and BCM (NATS control unit), allow the engine to run, operation of a stolen vehicle without a NVIS (NATS) registered key is prevented by NVIS (NATS).
  That is to say, NVIS (NATS) will immobilize the engine if someone tries to start it without the registered key of NVIS (NATS).
- All of the originally supplied ignition key IDs (except for card plate key) have been NVIS (NATS) registered.
  If requested by the vehicle owner, a maximum of five key IDs can be registered into the NVIS (NATS) components.
- The security indicator blinks when the ignition switch is in “OFF” or “ACC” position. Therefore, NVIS (NATS) warns outsiders that the vehicle is equipped with the anti-theft system.
- When NVIS (NATS) detects trouble, the security indicator lamp lights up while ignition key is in the “ON” position.
- NVIS (NATS) trouble diagnoses, system initialization and additional registration of other NVIS (NATS) ignition key IDs must be carried out using CONSULT-II hardware and CONSULT-II NVIS (NATS) software.
  When NVIS (NATS) initialization has been completed, the ID of the inserted ignition key is automatically NVIS (NATS) registered. Then, if necessary, additional registration of other NVIS (NATS) ignition key IDs can be carried out.
  Regarding the procedures of NVIS (NATS) initialization and NVIS (NATS) ignition key ID registration, refer to CONSULT-II Operation Manual NATS-IVIS/NVIS.
- **When servicing a malfunction of the NVIS (NATS) (indicated by lighting up of Security Indicator Lamp) or registering another NVIS (NATS) ignition key ID no., it may be necessary to re-register original key identification. Therefore, be sure to receive ALL KEYS from vehicle owner.**

System Composition

AIS00145

The immobilizer function of the NVIS (NATS) consists of the following:

- NATS ignition key
- NATS antenna amp. located in the ignition key cylinder
- BCM (NATS control unit)
- Engine control module (ECM)
- Security indicator

NOTE:
The communication between ECM and BCM uses the CAN communication system.

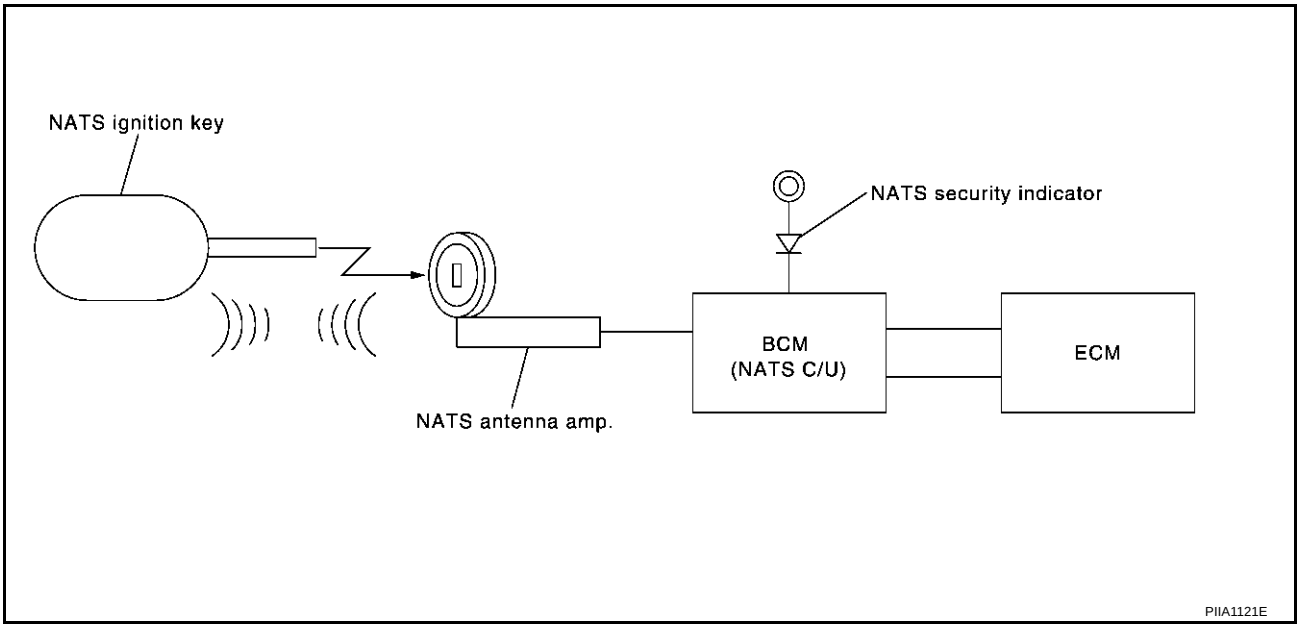

ECM Re-communicating Function

AIS00146

Performing following procedure can automatically perform re-communication of ECM and BCM, but only when the ECM has been replaced with a new one (*1).
*1: New one means a virgin ECM which has never been energized on-board.
(In this step, initialization procedure by CONSULT-II is not necessary)

NOTE:

- **When registering new Key IDs or replacing the ECM other than brand new, refer to CONSULT-II Operation Manual NATS-IVIS/NVIS.**
- **If multiple keys are attached to the key holder, separate them before work.**
- **Distinguish keys with unregistered key ID from those with registered ID.**

1. Install ECM.
2. Using a registered key (*2), turn ignition switch to “ON”.
   *2: To perform this step, use the key (except for card plate key) that has been used before performing ECM replacement.
3. Maintain ignition switch in “ON” position for at least 5 seconds.
4. Turn ignition switch to “OFF”.
5. Start engine.
   If engine can be started, procedure is completed.
   If engine cannot be started, refer to CONSULT-II Operation Manual NATS-IVIS/NVIS and initialize control unit.

Wiring Diagram — NATS —

AIS00147

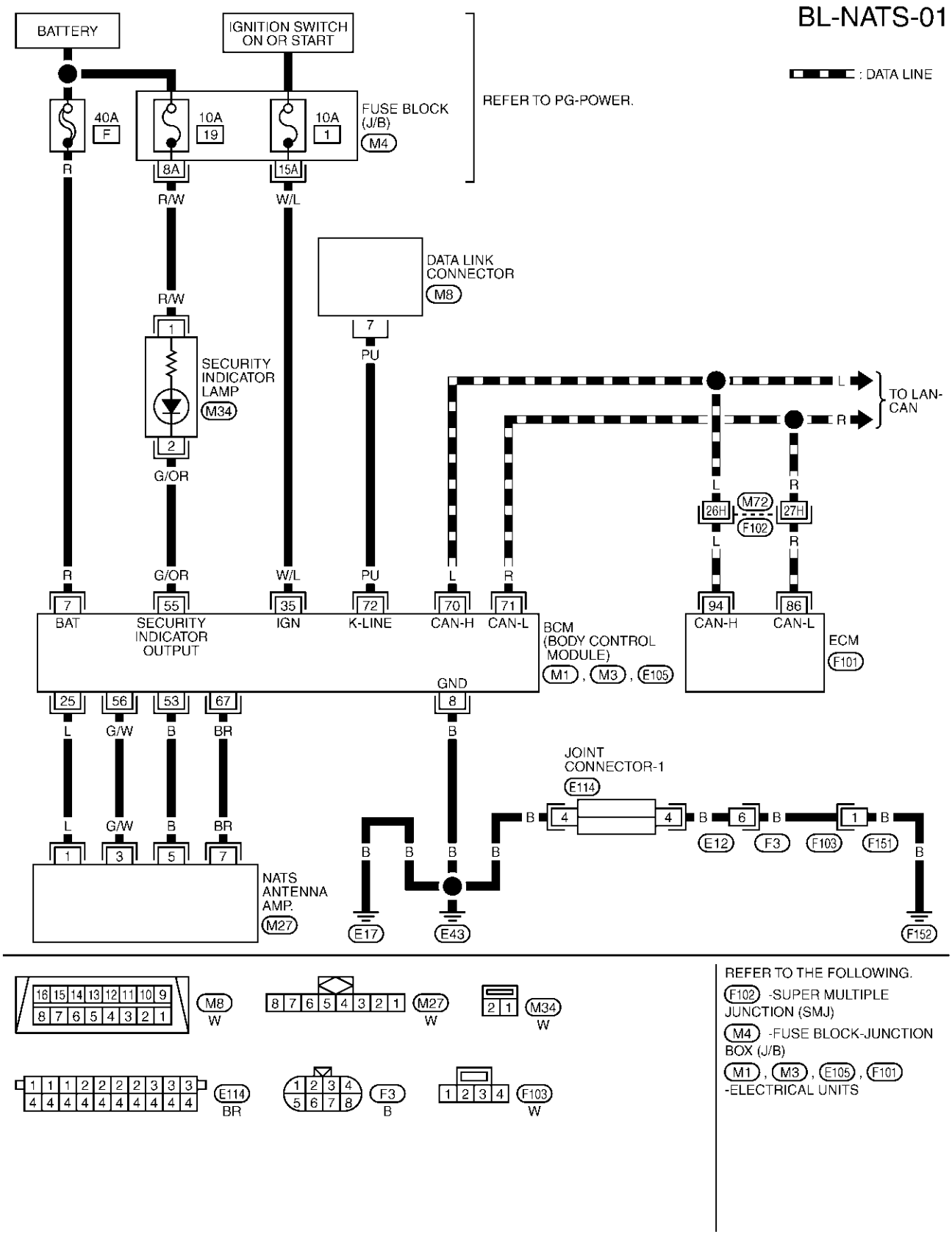

Terminals and Reference Value for BCM

AIS00148

TERMINAL	WIRE COLOR	ITEM	CONDITION	VOLTAGE
7	R	Power source (Fusible link)	—	Battery voltage
8	B	Ground	—	0V
25	L	NATS antenna amp.	Ignition switch: OFF → ON	0V → 5V (for 3 seconds)
35	W/L	Ignition switch (ON or START)	Ignition switch (ON or START position)	Battery voltage
53	B	NATS antenna amp.	—	0V
55	G/OR	Security indicator lamp	Goes OFF → illuminates (Every 2.4 seconds)	Battery voltage → 0V
56	G/W	NATS antenna amp.	Ignition switch (OFF → ON)	Just after turning ignition switch “ON”: Pointer of tester should move.
67	BR	NATS antenna amp.	Ignition switch (OFF → ON)	Just after turning ignition switch “ON”: Pointer of tester should move.
70	L	CAN-H	—	—
71	R	CAN-L	—	—
72	PU	Data link connector	—	—

CONSULT-II

AIS00149

CONSULT-II INSPECTION PROCEDURE

CAUTION:

If CONSULT-II is used with no connection of CONSULT-II CONVERTER, malfunctions might be detected in self-diagnosis depending on control unit which carry out CAN communication.

1. Turn ignition switch OFF.
2. Insert NVIS (NATS) program card into CONSULT-II.

   Program card : NATS (AEN02A)

3. Connect CONSULT-II and CONSULT-II CONVERTER to data link connector.

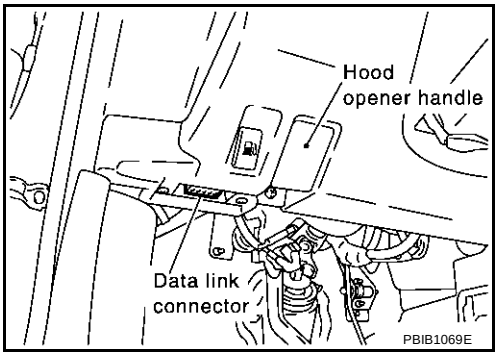

4. Turn ignition switch ON.
5. Touch “START”.

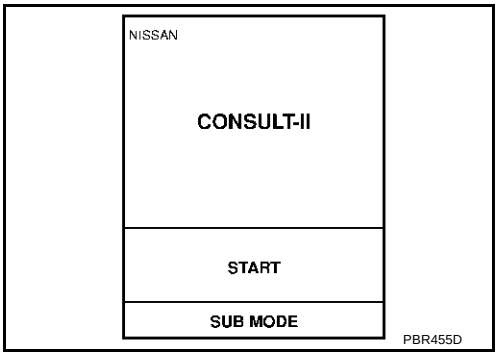

6. Select “NATS V.5.0”.
   If “NATS V5.0” is not indicated, go to GI-39, "CONSULT-II Data Link Connector (DLC) Circuit" .

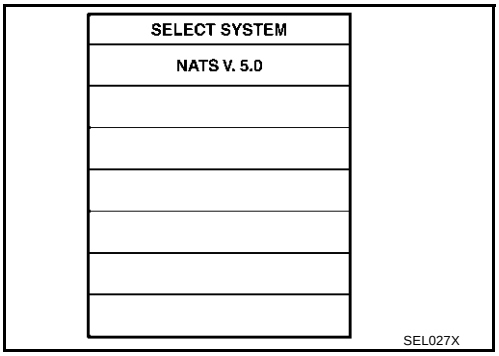

7. Perform each diagnostic test mode according to each service procedure.

For further information, see the CONSULT-II Operation Manual NATS-IVIS/NVIS.

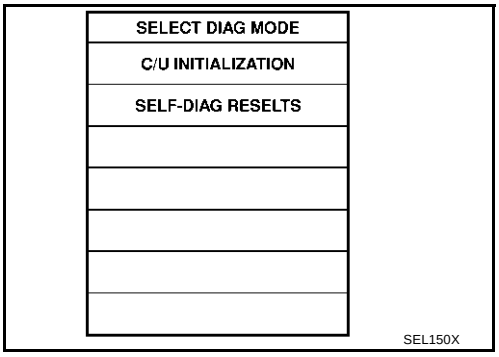

CONSULT-II DIAGNOSTIC TEST MODE FUNCTION

CONSULT-II DIAGNOSTIC TEST MODE	Description
C/U INITIALIZATION	When replacing any of the following components, C/U initialization and re-registration of all NATS ignition keys are necessary. [(NATS ignition key/ BCM (NATS control unit)/ ECM]
SELF-DIAG RESULTS	Detected items (screen terms) are as shown in the chart. Refer to BL-127, "NVIS (NATS) SELF-DIAGNOSTIC RESULTS ITEM CHART" .

NOTE:

- When any initialization is performed, all ID previously registered will be erased and all NATS ignition keys must be registered again.
- The engine cannot be started with an unregistered key. In this case, the system will show “DIFFERENCE OF KEY” or “LOCK MODE” as a self-diagnostic result on the CONSULT-II screen.
- In rare case, “CHAIN OF ECM-IMMU” might be stored as a self-diagnostic result during key registration procedure, even if the system is not malfunctioning.

HOW TO READ SELF-DIAGNOSTIC RESULTS

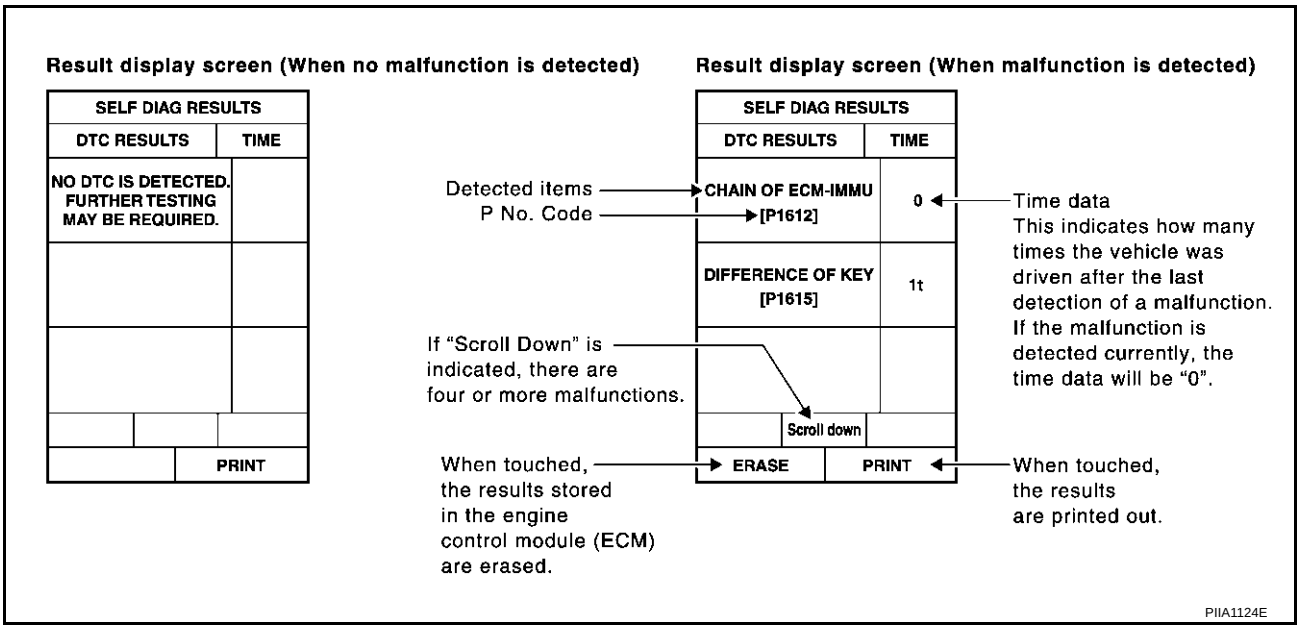

NVIS (NATS) SELF-DIAGNOSTIC RESULTS ITEM CHART

Detected items [NVIS (NATS) program card screen terms]	P No. Code (Self-diagnostic result of "ENGINE")	Malfunction is detected when.....	Reference page
CHAIN OF ECM-IMMU [P1612]	NATS MALFUNCTION P1612	Communication impossible between ECM and BCM (NATS control unit) In rare case, "CHAIN OF ECM-IMMU" might be stored during key registration procedure, even if the system is not malfunctioning.	Refer to BL-132, "Diagnostic Procedure 1" .
DIFFERENCE OF KEY [P1615]	NATS MALFUNCTION P1615	BCM (NATS control unit) can receive the key ID signal but the result of ID verification between key ID and BCM (NATS control unit) is NG.	Refer to BL-133, "Diagnostic Procedure 2" .
CHAIN OF IMMU-KEY [P1614]	NATS MALFUNCTION P1614	BCM (NATS control unit) cannot receive the key ID signal.	Refer to BL-134, "Diagnostic Procedure 3" .
ID DISCORD, IMM-ECM [P1611]	NATS MALFUNCTION P1611	The result of ID verification between BCM (NATS control unit) and ECM is NG. System initialization is required.	Refer to BL-136, "Diagnostic Procedure 4" .
LOCK MODE [P1610]	NATS MALFUNCTION P1610	When the starting operation is carried out five or more times consecutively under the following conditions, NVIS (NATS) will shift the mode to one which prevents the engine from being started. ● Unregistered ignition key is used. ● BCM (NATS control unit) or ECM's malfunctioning.	Refer to BL-138, "Diagnostic Procedure 6" .
DON'T ERASE BEFORE CHECKING ENG DIAG	—	All engine trouble codes except NVIS (NATS) trouble code has been detected in ECM.	Refer to BL-128, "Work Flow" .

Work Flow

AIS0014A

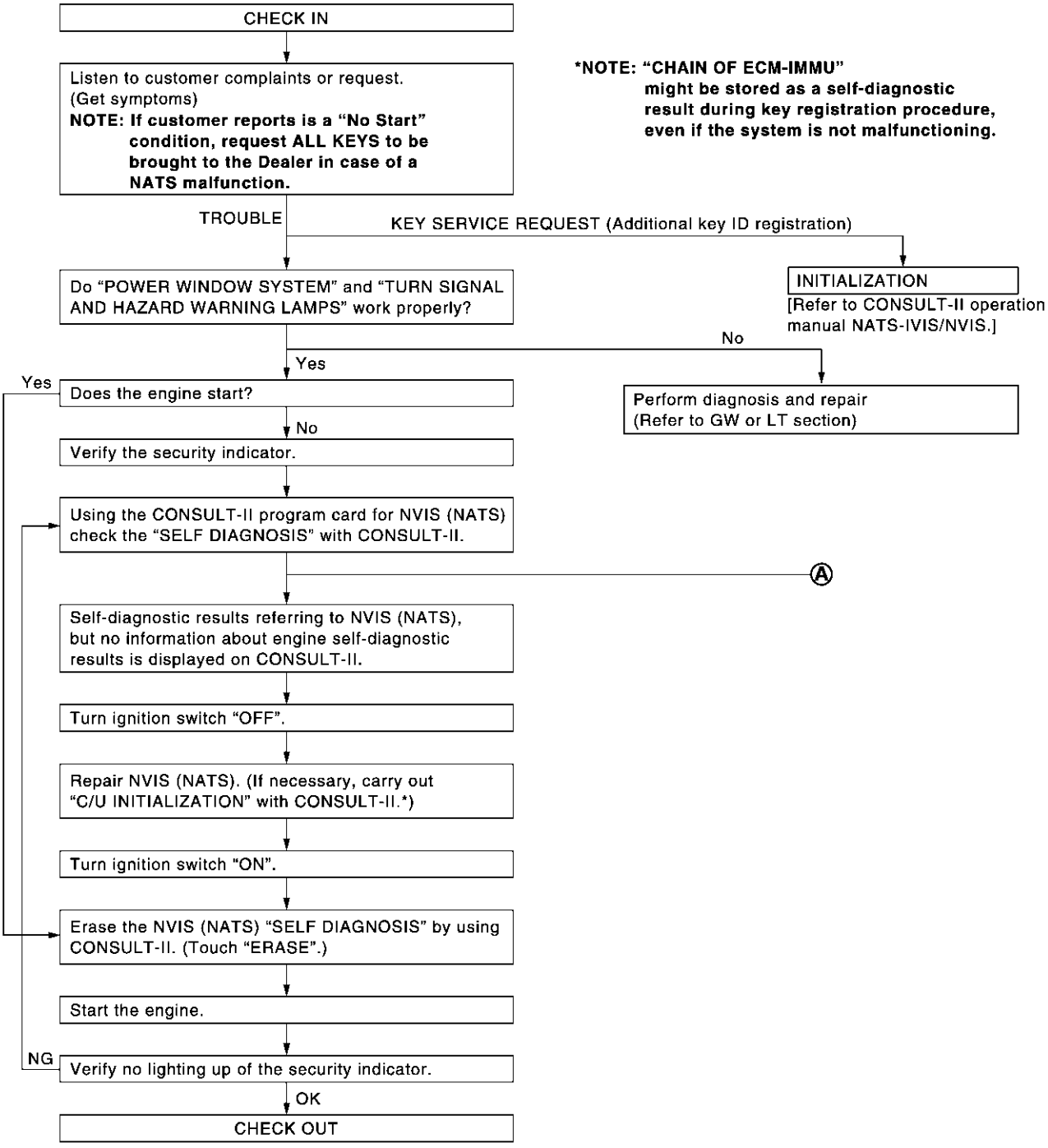

PIIA3528E

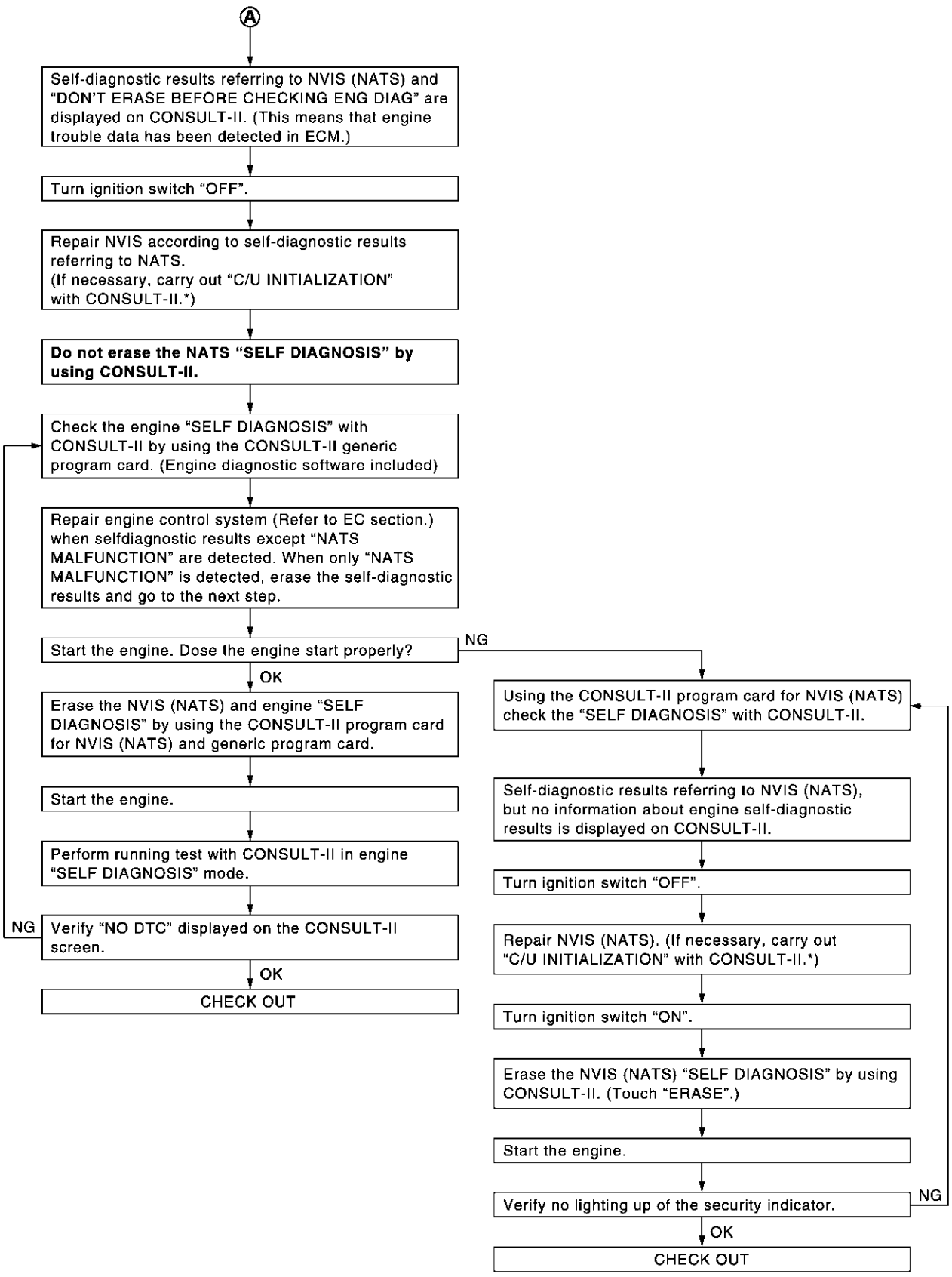
A
Self-diagnostic results referring to NVIS (NATS) and "DON'T ERASE BEFORE CHECKING ENG DIAG" are displayed on CONSULT-II. (This means that engine trouble data has been detected in ECM.)
Turn ignition switch "OFF".
Repair NVIS according to self-diagnostic results referring to NATS.
(If necessary, carry out "C/U INITIALIZATION" with CONSULT-II.*)
Do not erase the NATS "SELF DIAGNOSIS" by using CONSULT-II.
Check the engine "SELF DIAGNOSIS" with CONSULT-II by using the CONSULT-II generic program card. (Engine diagnostic software included)
Repair engine control system (Refer to EC section.) when selfdiagnostic results except "NATS MALFUNCTION" are detected. When only "NATS MALFUNCTION" is detected, erase the self-diagnostic results and go to the next step.
Start the engine. Dose the engine start properly?
NG
OK
Erase the NVIS (NATS) and engine "SELF DIAGNOSIS" by using the CONSULT-II program card for NVIS (NATS) and generic program card.
Start the engine.
Perform running test with CONSULT-II in engine "SELF DIAGNOSIS" mode.
NG
Verify "NO DTC" displayed on the CONSULT-II screen.
OK
CHECK OUT
Using the CONSULT-II program card for NVIS (NATS) check the "SELF DIAGNOSIS" with CONSULT-II.
Self-diagnostic results referring to NVIS (NATS), but no information about engine self-diagnostic results is displayed on CONSULT-II.
Turn ignition switch "OFF".
Repair NVIS (NATS). (If necessary, carry out "C/U INITIALIZATION" with CONSULT-II.*)
Turn ignition switch "ON".
Erase the NVIS (NATS) "SELF DIAGNOSIS" by using CONSULT-II. (Touch "ERASE".)
Start the engine.
Verify no lighting up of the security indicator.
NG
OK
CHECK OUT
PIIA3529E

Trouble Diagnoses

AIS0014B

SYMPTOM MATRIX CHART 1

Self-diagnosis related item

SYMPTOM	Displayed "SELF-DIAG RESULTS" on CONSULT-II screen.	DIAGNOSTIC PROCEDURE (Reference page)	SYSTEM (Malfunctioning part or mode)	REFERENCE PART NO. OF ILLUSTRATION ON SYSTEM DIAGRAM
● Security indicator lighting up* ● Engine cannot be started	CHAIN OF ECM-IMMU [P1612]	PROCEDURE 1 (BL-132)	In rare case, "CHAIN OF ECM-IMMU" might be stored during key registration procedure, even if the system is not malfunctioning.	—
			Open circuit in battery voltage line of BCM (NATS control unit) circuit	C1
			Open circuit in ignition line of BCM (NATS control unit) circuit	C2
			Open circuit in ground line of BCM (NATS control unit) circuit	C3
			Open or short circuit between BCM (NATS control unit) and ECM communication line	C4
			ECM	B
			BCM (NATS control unit)	A
	DIFFERENCE OF KEY [P1615]	PROCEDURE 2 (BL-133)	Unregistered key	D
			BCM (NATS control unit)	A
	CHAIN OF IMMU-KEY [P1614]	PROCEDURE 3 (BL-134)	Malfunction of key ID chip	E5
			Communication line between ANT/ AMP and BCM (NATS control unit): Open circuit or short circuit of battery voltage line or ground line	E1
				E2
			Open circuit in power source line of ANT/ AMP circuit	E3
			Open circuit in ground line of ANT/ AMP circuit	E4
			NATS antenna amp.	E6
			BCM (NATS control unit)	A
	ID DISCORD, IMM-ECM [P1611]	PROCEDURE 4 (BL-136)	System initialization has not yet been completed.	F
			ECM	B
	LOCK MODE [P1610]	PROCEDURE 6 (BL-138)	LOCK MODE	D
Security indicator lighting up*	DON'T ERASE BEFORE CHECKING ENG DIAG	WORK FLOW (BL-128)	Engine trouble data and NVIS (NATS) trouble data have been detected in ECM	—

*: When NVIS (NATS) detects trouble, the security indicator lights up while ignition key is in the "ON" position.

SYMPTOM MATRIX CHART 2

Non self-diagnosis related item

SYMPTOM	DIAGNOSTIC PROCEDURE (Reference page)	SYSTEM (Malfunctioning part or mode)	REFERENCE PART NO. OF ILLUSTRATION ON SYSTEM DIAGRAM
Security indicator does not light up*.	PROCEDURE 5 (BL-137)	Security indictor.	—
		Open circuit between Fuse and BCM (NATS control unit)	—
		BCM (NATS control unit)	A

*: CONSULT-II self-diagnostic results display screen “no malfunction is detected”.

DIAGNOSTIC SYSTEM DIAGRAM

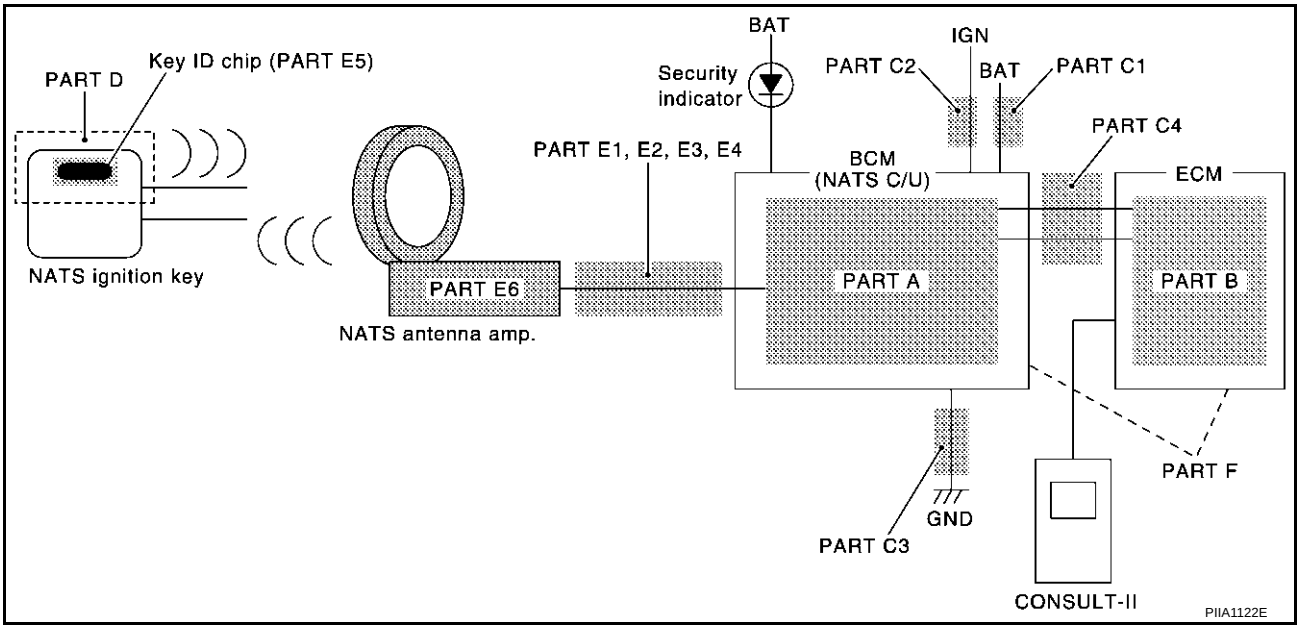

Diagnostic Procedure 1

AIS0014C

Self-diagnostic results:
“CHAIN OF ECM-IMMU” displayed on CONSULT-II screen
First perform the “SELF-DIAG RESULTS” in “BCM” with CONSULT-II, then perform the trouble diagnosis of malfunction system indicated “SELF-DIAG RESULTS” of “BCM”. Refer to BCS-18, "CAN Communication Inspection Using CONSULT-II (Self-Diagnosis)" .

1. CONFIRM SELF-DIAGNOSTIC RESULTS

Confirm SELF-DIAGNOSTIC RESULTS “CHAIN OF ECM-IMMU” displayed on CONSULT-II screen.

NOTE:
In rare case, “CHAIN OF ECM-IMMU” might be stored during key registration procedure, even if the system is not malfunctioning.

Is CONSULT-II screen displayed as above?

Yes >> GO TO 2.
No >> GO TO BL-130, "SYMPTOM MATRIX CHART 1" .

SELF DIAGNOSIS	
DTC RESULTS	TIME
CHAIN OF ECM-IMMU [P1612]	0

PIIA1260E

2. CHECK POWER SUPPLY CIRCUIT FOR BCM (NATS CONTROL UNIT)

1. Disconnect BCM (NATS control unit) connector.
2. Check voltage between BCM (NATS control unit) connector E105 terminal 7 (R) and ground with CONSULT-II or tester.

Battery voltage should exist.

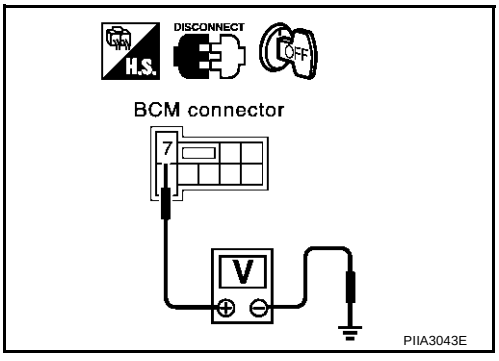

PIIA3043E

OK or NG

OK >> GO TO 3.
NG >> Check the following.
- 40A fusible link (letter **F** , located in fuse and fusible link box)
- Harness for open or short between fuse and BCM (NATS control unit) connector
  Ref. Part No. C1

3. CHECK IGN SW. ON SIGNAL

1. Turn ignition switch ON.
2. Check voltage between BCM (NATS control unit) connector M1 terminal 35 (W/L) and ground with CONSULT-II or tester.

Battery voltage should exist.

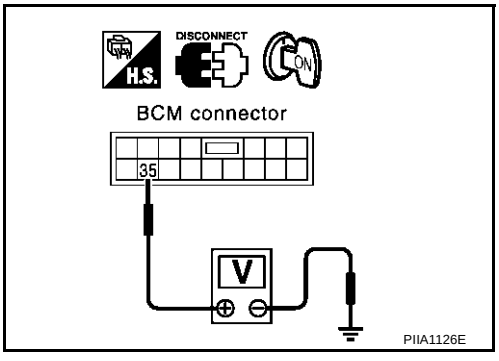

PIIA1126E

OK or NG

OK >> GO TO 4.
NG >> Check the following.
- 10A fuse [No. 1, located in the fuse block (J/B)]
- Harness for open or short between fuse and BCM (NATS control unit) connector
  Ref. part No. C2

4. CHECK GROUND CIRCUIT FOR BCM (NATS CONTROL UNIT)

1. Turn ignition OFF.
2. Check continuity between BCM (NATS control unit) connector E105 terminal 8 (B) and ground.

Continuity should exist.

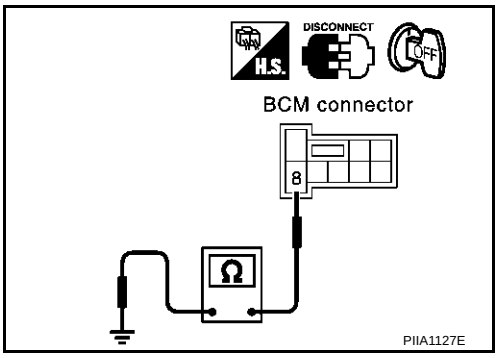

OK or NG

OK >> GO TO 5.
NG >> Repair harness. **Ref. part No. C3**

5. REPLACE BCM (NATS CONTROL UNIT)

1. Replace BCM (NATS control unit) **Ref. part No. A**
2. Perform initialization with CONSULT-II.
   For initialization, refer to “CONSULT-II Operation Manual NATS-IVIS/NVIS”.

Does the engine start?

Yes >> BCM (NATS control unit) is malfunctioning.
No >>
- ECM is malfunctioning.
- Replace ECM. **Ref. part No. B**
- Perform initialization or re-communicating function.
- For initialization, refer to “CONSULT-II Operation Manual NATS-IVIS/NVIS”.
- For re-communicating function, refer to BL-123, "ECM Re-communicating Function" .

Diagnostic Procedure 2

AIS0014D

Self-diagnostic results:
“DIFFERENCE OF KEY” displayed on CONSULT-II screen

1. CONFIRM SELF-DIAGNOSTIC RESULTS

Confirm SELF-DIAGNOSTIC RESULTS “DIFFERENCE OF KEY” displayed on CONSULT-II screen.

Is CONSULT-II screen displayed as above?

Yes >> GO TO 2.
No >> GO TO BL-130, "SYMPTOM MATRIX CHART 1" .

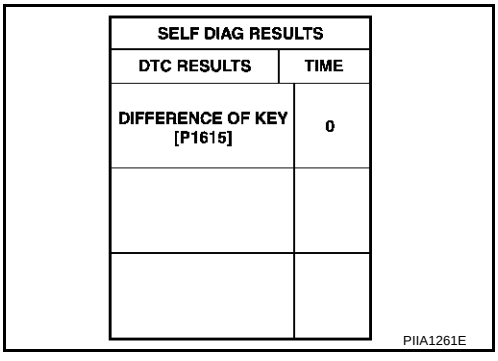

SELF DIAG RESULTS	
DTC RESULTS	TIME
DIFFERENCE OF KEY [P1615]	0

PIIA1261E

2. PERFORM INITIALIZATION WITH CONSULT-II

Perform initialization with CONSULT-II. Re-register all NATS ignition key IDs.
For initialization and registration of NATS ignition key IDs, refer to “CONSULT-II Operation Manual NATS-IVIS/NVIS”.

NOTE:
If the initialization is not completed or malfunctions, CONSULT-II shows message on the screen.

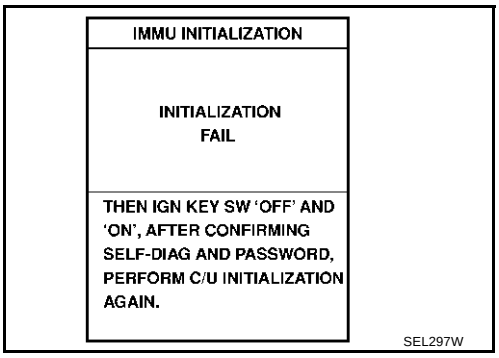

Can the system be initialized and can the engine be started with re-registered NATS ignition key?

Yes >> ● Ignition key ID was unregistered. **Ref. part No. D**

No >> ● BCM (NATS control unit) is malfunctioning.
- Replace BCM (NATS control unit). **Ref. part No. A**
- Perform initialization with CONSULT-II.
- For initialization, refer to “CONSULT-II Operation Manual NATS-IVIS/NVIS”.

Diagnostic Procedure 3

AIS0014E

Self-diagnostic results:
“CHAIN OF IMMU-KEY” displayed on CONSULT-II screen

1. CONFIRM SELF-DIAGNOSTIC RESULTS

Confirm SELF-DIAGNOSTIC RESULTS “CHAIN OF IMMU-KEY” displayed on CONSULT-II screen.

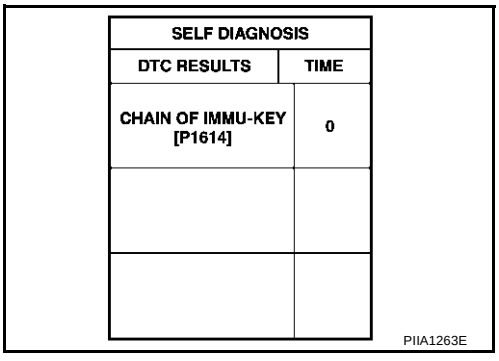

Is CONSULT-II screen displayed as above?

Yes >> GO TO 2.
No >> GO TO BL-130, "SYMPTOM MATRIX CHART 1" .

2. CHECK NATS ANTENNA AMP. INSTALLATION

Check NATS antenna amp. installation. Refer to BL-139, "How to Replace NATS Antenna Amp." .

OK or NG

OK >> GO TO 3.
NG >> Reinstall NATS antenna amp. correctly.

3. CHECK NVIS (NATS) IGNITION KEY ID CHIP

Start engine with another registered NATS ignition key.

Does the engine start?

Yes >> ● Ignition key ID chip is malfunctioning.
- Replace the ignition key.
  Ref. part No, E5
- Perform initialization with CONSULT-II.
  For initialization, refer to “CONSULT-II Operation Manual NATS-IVIS/NVIS”.

No >> GO TO 4.

4. CHECK POWER SUPPLY FOR NATS ANTENNA AMP.

1. Turn ignition switch “ON”.
2. Check voltage between NATS antenna amp. connector M27 terminal 1 (L) and ground with CONSULT-II or tester.

Just after turning ignition switch “ON”

Voltage: Approx. 5V (For 3 seconds)

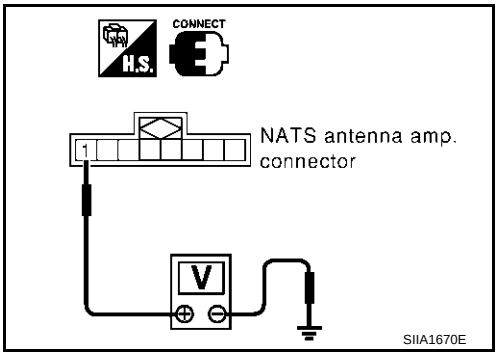

OK or NG

OK >> GO TO 5.

NG >> ● Check harness for open or short between NATS antenna amp. and BCM (NATS control unit).

NOTE:
If harness is OK, replace BCM (NATS control unit), perform initialization with CONSULT-II. For initialization, refer to “CONSULT-II Operation Manual NATS-IVIS/NVIS”.

5. CHECK NATS ANTENNA AMP. SIGNAL LINE- 1

Check voltage between NATS antenna amp. connector M27 terminal 3 (G/W) and ground with analogue tester.

Before turning ignition switch “ON”

Voltage: 0V

Just after turning ignition switch “ON”

: Pointer of tester should move.

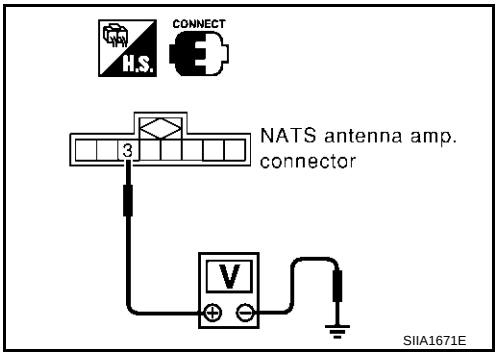

OK or NG

OK >> GO TO 6.

NG >> ● Check harness for open or short between NATS antenna amp. and BCM (NATS control unit).

NOTE:
If harness is OK, replace BCM (NATS control unit), perform initialization with CONSULT-II. For initialization, refer to “CONSULT-II Operation Manual NATS-IVIS/NVIS”.

6. CHECK NATS ANTENNA AMP. SIGNAL LINE- 2

Check voltage between NATS antenna amp. connector M27 terminal 7 (BR) and ground with analogue tester.

Before turning ignition switch “ON”

Voltage: 0V

Just after turning ignition switch “ON”

: Pointer of tester should move.

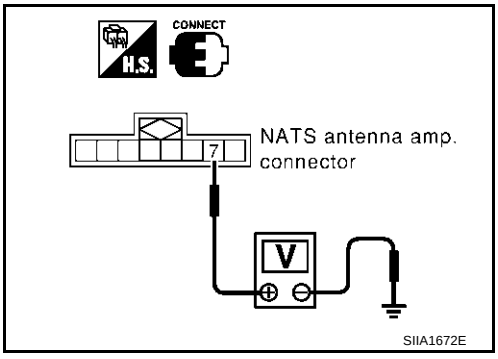

OK or NG

OK >> GO TO 7.

NG >> ● Check harness for open or short between NATS antenna amp. and BCM (NATS control unit).

NOTE:
If harness is OK, replace BCM (NATS control unit), perform initialization with CONSULT-II. For initialization, refer to “CONSULT-II Operation Manual NATS-IVIS/NVIS”.

7. CHECK NATS ANTENNA AMP. GROUND LINE CIRCUIT

1. Turn ignition switch “OFF”.
2. Check continuity between NATS antenna amp. connector M27 terminal 5 (B) and ground.

Continuity should exist.

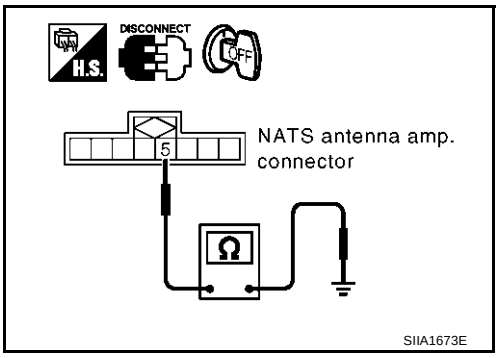

OK or NG

OK >> ● NATS antenna amp. is malfunctioning.
Ref. part No. E6

NG >> ● Check harness for open or short between NATS antenna amp. and BCM (NATS control unit).

NOTE:
If harness is OK, replace BCM (NATS control unit), perform initialization with CONSULT-II. For initialization, refer to “CONSULT-II Operation Manual NATS-IVIS/NVIS”.

Diagnostic Procedure 4

AIS0014F

Self-diagnostic results:
“ID DISCORD, IMM-ECM” displayed on CONSULT-II screen

1. CONFIRM SELF-DIAGNOSTIC RESULTS

Confirm SELF-DIAGNOSTIC RESULTS “ID DISCORD, IMM-ECM” displayed on CONSULT-II screen.

NOTE:
“ID DISCORD IMM-ECM”:
Registered ID of BCM (NATS control unit) is in discord with that of ECM.

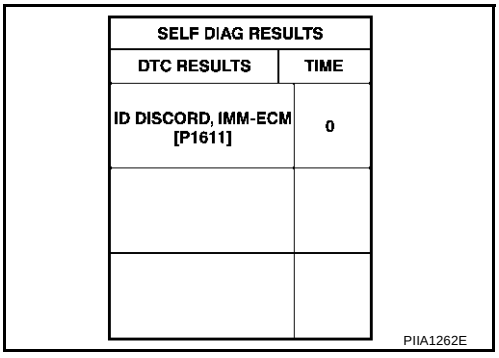

SELF DIAG RESULTS	
DTC RESULTS	TIME
ID DISCORD, IMM-ECM [P1611]	0

PIIA1262E

Is CONSULT-II screen displayed as above?

Yes >> GO TO 2.
No >> GO TO BL-130, "SYMPTOM MATRIX CHART 1" .

2. PERFORM INITIALIZATION WITH CONSULT-II

Perform initialization with CONSULT-II. Re-register all NATS ignition key IDs.
For initialization, refer to “CONSULT-II Operation Manual NATS-IVIS/NVIS”.

NOTE:
If the initialization is not completed or malfunctions, CONSULT-II shows message on the screen.

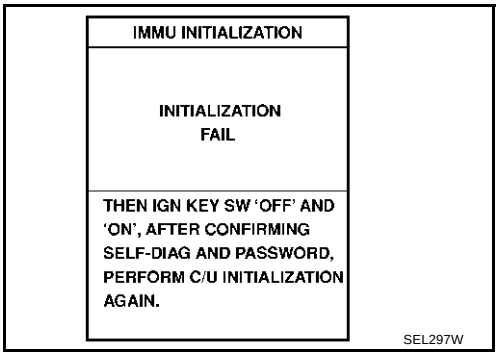

IMMU INITIALIZATION
INITIALIZATION FAIL
THEN IGN KEY SW ‘OFF’ AND ‘ON’, AFTER CONFIRMING SELF-DIAG AND PASSWORD, PERFORM C/U INITIALIZATION AGAIN.

SEL297W

Can the system be initialized?

Yes >> ● Start engine. (END)
● (System initialization had not been completed. **Ref. part No. F**)

No >> ● ECM is malfunctioning.
● Replace ECM. **Ref. part No. B**
● Perform initialization with CONSULT-II.
For initialization, refer to “CONSULT-II Operation Manual NATS-IVIS/NVIS”.

Diagnostic Procedure 5

AIS0014G

“SECURITY INDICATOR LAMP DOES NOT LIGHT UP”

1. CHECK FUSE

Check 10A fuse [No.19, located in the fuse block (J/B)]

OK or NG

OK >> GO TO 2.
NG >> Replace fuse.

2. CHECK SECURITY INDICATOR LAMP

1. Install 10A fuse.
2. Start engine and turn ignition switch OFF.
3. Check the security indicator lamp lights up.

Security indicator lamp should light up.

OK or NG

OK >> Inspection END.
NG >> GO TO 3.

3. CHECK SECURITY INDICATOR LAMP POWER SUPPLY CIRCUIT

1. Disconnect security indicator lamp connector.
2. Check voltage between security indicator lamp connector M34 terminal 1 (R/W) and ground.

Battery voltage should exist.

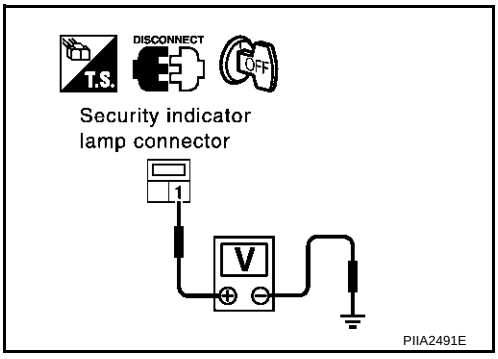

OK or NG

OK >> GO TO 4.
NG >> Check harness for open or short between fuse and security indicator lamp.

4. CHECK BCM (NATS CONTROL UNIT) FUNCTION

1. Connect security indicator lamp connector.
2. Disconnect BCM (NATS control unit) connector M3.
3. Check voltage between BCM (NATS control unit) connector M3 terminal 55 (G/OR) and ground.

Battery voltage should exist.

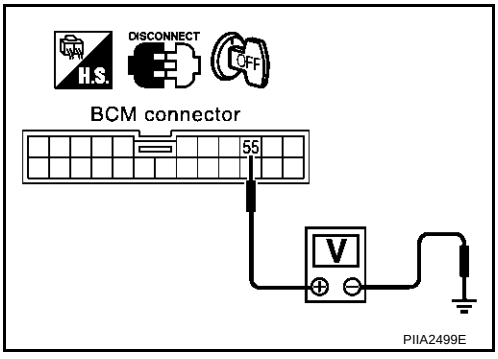

OK or NG

OK >> BCM (NATS control unit) is malfunctioning.
- Replace BCM (NATS control unit).
  Ref. part No. A
- Perform initialization with CONSULT-II.
- For initialization, refer to “CONSULT-II Operation Manual NATS-IVIS/NVIS”.

NG >> Check the following.
- Harness for open or short between security indicator lamp and BCM (NATS control unit).
- Indicator lamp condition

Diagnostic Procedure 6

AIS0014H

Self-diagnostic results:
“LOCK MODE” displayed on CONSULT-II screen

1. CONFIRM SELF-DIAGNOSTIC RESULTS

Confirm SELF-DIAGNOSTIC RESULTS “LOCK MODE” is displayed on CONSULT-II screen.

Is CONSULT-II screen displayed as above?

Yes >> GO TO 2.
No >> GO TO BL-130, "SYMPTOM MATRIX CHART 1" .

SELF DIAG RESULTS	
DTC RESULTS	TIME
LOCK MODE [P1610]	0

PIIA1264E

2. ESCAPE FROM LOCK MODE

1. Turn ignition switch OFF.
2. Turn ignition switch ON with registered key. (Do not start engine.) Wait 5 seconds.
3. Return the key to OFF position. Wait 5 seconds.
4. Repeat steps 2 and 3 twice (total of three cycles).
5. Start the engine.

Does engine start?

Yes >> System is OK (Now system is escaped from “LOCK MODE”).
No >> GO TO 3.

3. PERFORM INITIALIZATION WITH CONSULT-II

Perform initialization with CONSULT-II.
For initialization, refer to “CONSULT-II Operation Manual NATS-IVIS/NVIS”.

NOTE:
If the initialization is not completed or malfunctions, CONSULT-II shows the message on the screen.

Can the system be initialized?

Yes >> System is OK.
No >> GO TO 4

IMMU INITIALIZATION
INITIALIZATION FAIL
THEN IGN KEY SW ‘OFF’ AND ‘ON’, AFTER CONFIRMING SELF-DIAG AND PASSWORD, PERFORM C/U INITIALIZATION AGAIN.

SEL297W

4. PERFORM INITIALIZATION WITH CONSULT-II AGAIN

1. Replace BCM (NATS control unit).
2. Perform initialization with CONSULT-II.
   For initialization, refer to “CONSULT-II Operation Manual NATS-IVIS/NVIS”.

NOTE:
If the initialization is not completed or malfunctions, CONSULT-II shows the message on the screen.

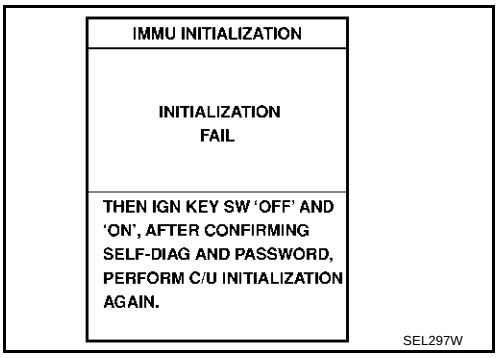

Can the system be initialized?

Yes >> System is OK. (BCM (NATS control unit) is malfunctioning. **Ref. part No. A**)

No >> ● ECM is malfunctioning.
Replace ECM. **Ref. part No. B**
Perform initialization with CONSULT-II.
For initialization, refer to “CONSULT-II Operation Manual NATS-IVIS/NVIS”.

How to Replace NATS Antenna Amp.

AIS0014I

NOTE:

- **If NATS antenna amp. is not installed correctly, NVIS (NATS) system will not operate properly and SELF-DIAG RESULTS on CONSULT-II screen will show “LOCK MODE” or “CHAIN OF IMMU-KEY”.**
- **Initialization is not necessary only when NATS antenna amp. is replaced with a new one.**

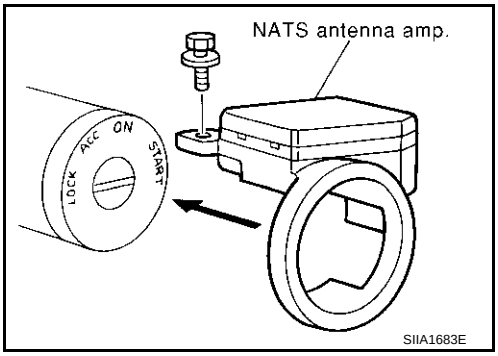

INTEGRATED HOMELINK TRANSMITTER

PFP:96401

Wiring Diagram —TRNSCV—

AIS000EK

BL-TRANSCV-01

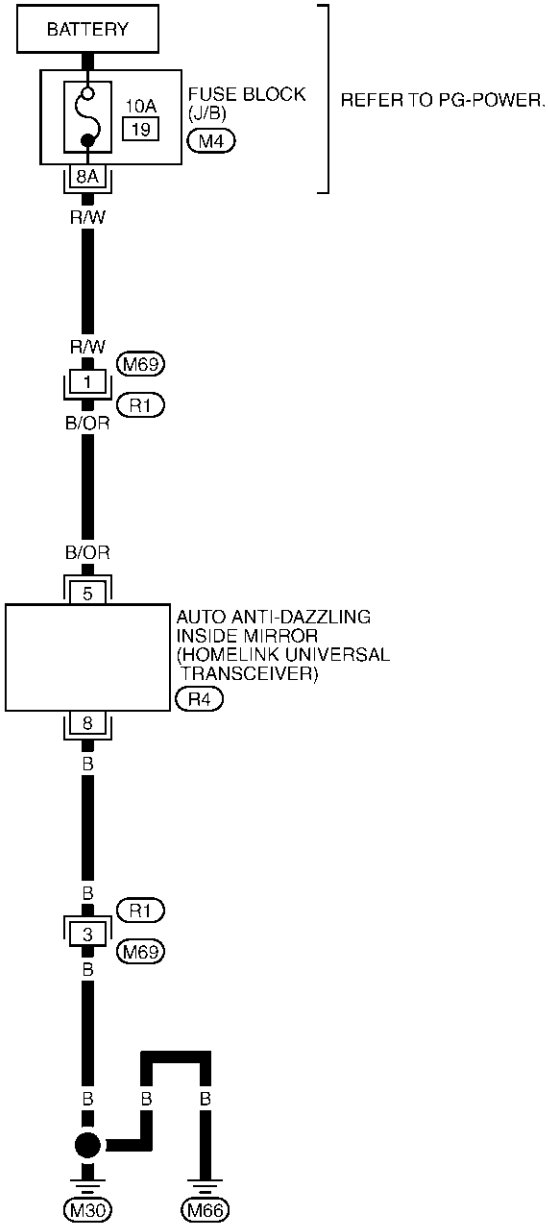

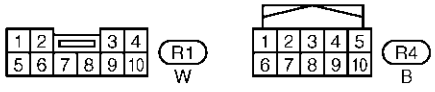

REFER TO THE FOLLOWING.

M4 -FUSE BLOCK-JUNCTION BOX (J/B)

TIWT0285E

Trouble Diagnoses

AIS000EL

DIAGNOSTIC PROCEDURE

SYMPTOM: Transmitter does not activate receiver.

Before conducting the procedure given below, make sure that system receiver (garage door opener, etc.) operates with original, hand-held transmitter. If NG, receiver or hand-held transmitter is malfunctioning, not vehicle related.

1. ILLUMINATION CHECK

1. Turn ignition switch “OFF”.
2. Does red light (LED) of transmitter illuminate when any transmitter button is pressed?

YES or NO

YES >> GO TO 2.
NO >> GO TO 3.

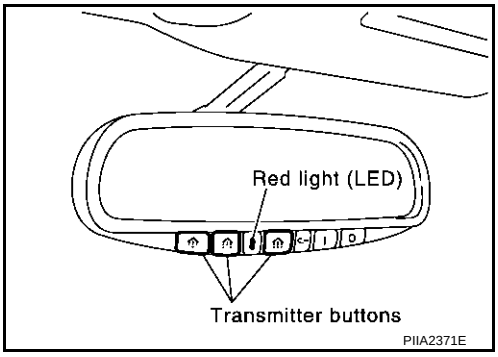

2. TRANSMITTER CHECK

Check transmitter with Tool*.
*:For details, refer to Technical Service Bulletin.

OK or NG

OK >> Receiver or hand-held transmitter malfunction, not vehicle related.
NG >> Replace inside mirror assembly.

3. CHECK POWER SUPPLY

1. Disconnect transmitter connector.
2. Turn ignition switch “OFF”.
3. Check voltage between auto anti-dazzling inside mirror (integrated homelink transmitter) connector R4 terminal 5 (B/OR) and ground.

5 (B/OR) – Ground : Battery voltage

OK or NG

OK >> GO TO 4.
NG >>
- Check 10A fuse. [No. 19 located in the fuse block (J/B)]
- Harness for open or short between fuse and anti-dazzling inside mirror (integrated homelink transmitter).

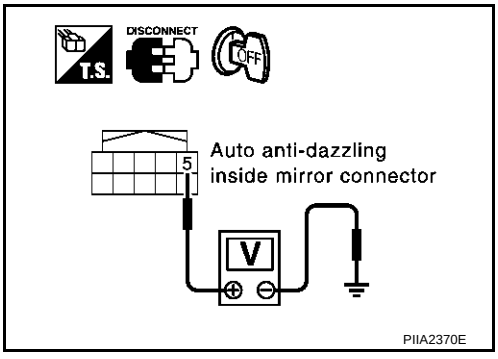

4. GROUND CIRCUIT CHECK

Check continuity between anti-dazzling inside mirror (integrated homelink transmitter) connector R4 terminal 8 (B) and ground.

8 (B) – Ground :Continuity should exist.

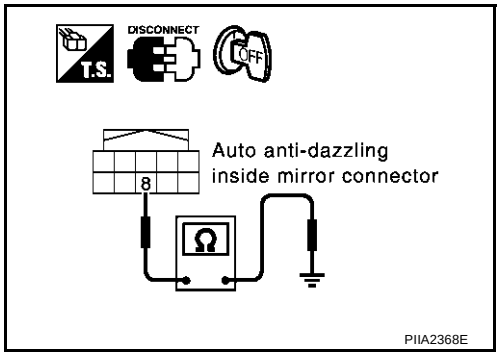

OK or NG

OK >> Replace inside mirror assembly.
NG >> Harness for open or short between anti-dazzling inside mirror (integrated homelink transmitter) body ground.

BODY REPAIR

PFP:60100

Body Exterior Paint Color

AIS00446

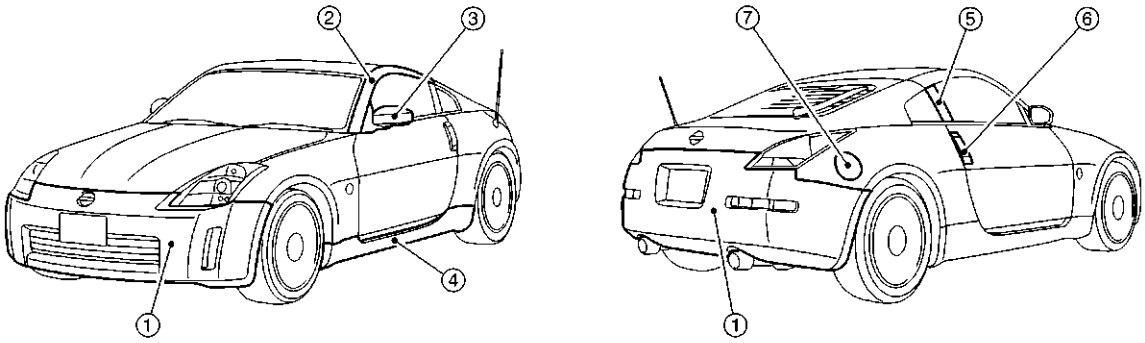

SIIA1975E

Component											
			Color code	BA17	BAX6	BAX8	BB17	BKH3	BKY0	BQX1	BWV2
			Description	Orange	Red	Red	Blue	Black	Silver	White	Silver
			Paint type	2P	2S	2P	CPM	2S	M	3P	M
			Hard clear coat	-	X	X	X	X	-	-	-
1	Bumper fascia		Body color	BA17	BAX6	BAX8	BB17	BKH3	BKY0	BQX1	BWV2
2	Front pillar finisher		Body color	BA17	BAX6	BAX8	BB17	BKH3	BKY0	BQX1	BWV2
3	Door outside mirror	Case	Body color	BA17	BAX6	BAX8	BB17	BKH3	BKY0	BQX1	BWV2
		Base	Body color	BA17	BAX6	BAX8	BB17	BKH3	BKY0	BQX1	BWV2
4	Center mudguard		Body color	BA17	BAX6	BAX8	BB17	BKH3	BKY0	BQX1	BWV2
5	Door sash		Black	GROSS 88	GROSS 88	GROSS 88	GROSS 88	GROSS 88	GROSS 88	GROSS 88	GROSS 88
6	Door outside handle and escutcheon		Velour chromium-plate	Cr2p	Cr2p	Cr2p	Cr2p	Cr2p	Cr2p	Cr2p	Cr2p
7	Fuel filler lid		Body color	BA17	BAX6	BAX8	BB17	BKH3	BKY0	BQX1	BWV2

2S:Solid + Clear, M:Metallic, 2P:2-Coat pearl, 3P:3-Coat pearl, CPM:Clear pearl metallic

Body Component Parts

AIS00447

UNDERBODY COMPONENT PARTS

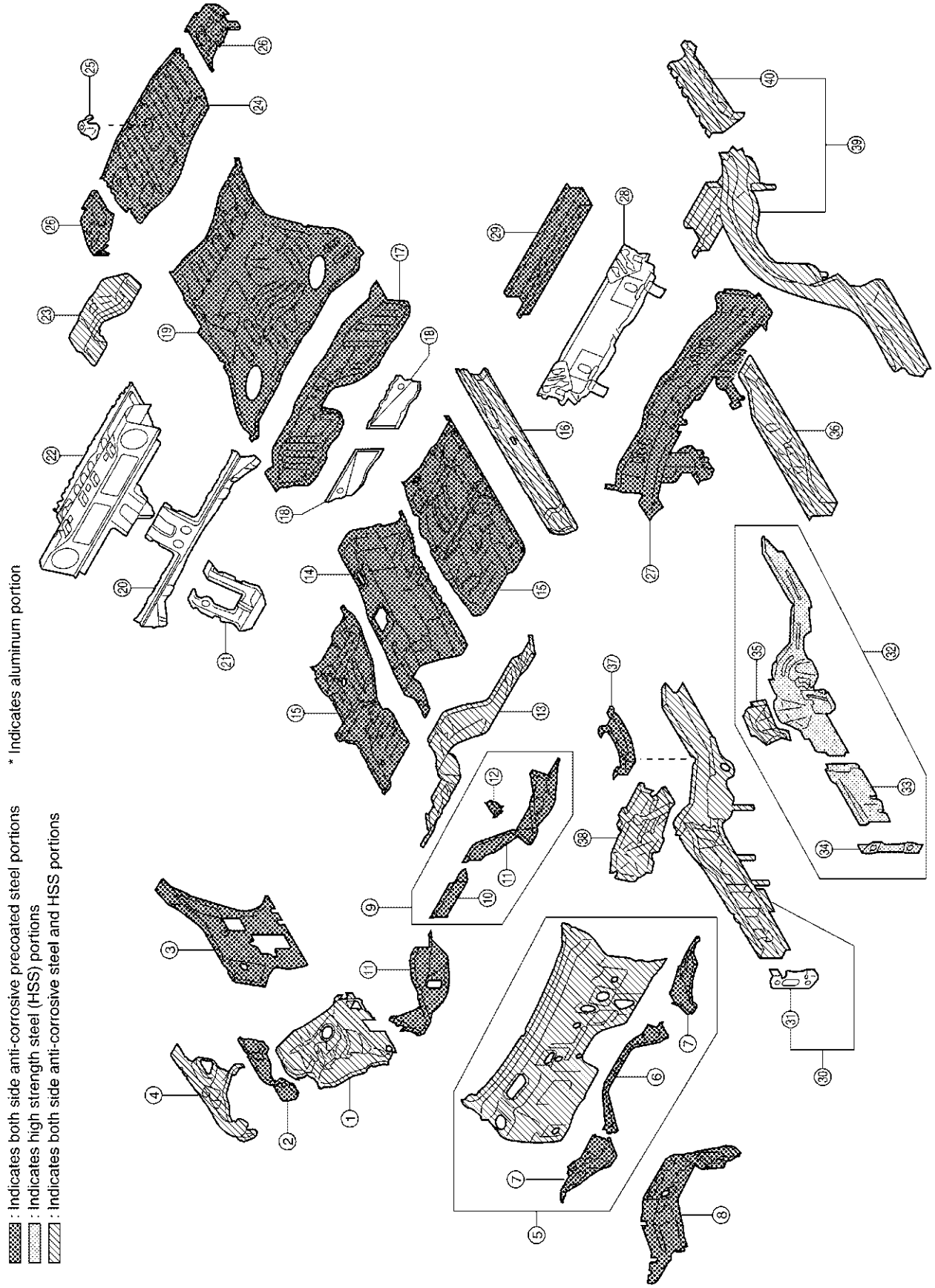

SIIA1972E

1. Front strut housing (RH&LH)
2. Upper front hoodledge (RH&LH)
3. Upper rear hoodledge (RH&LH)
4. Hoodledge reinforcement (RH&LH)
5. Upper dash assembly
6. Lower dash crossmember center reinforcement
7. Lower dash crossmember reinforcement
8. Cowl top
9. Lower dash crossmember assembly
10. Front crossmember center
11. Lower dash crossmember
12. Steering column mounting reinforcement
13. Lower dash
14. Front floor center
15. Front floor
16. Inner sill (RH&LH)
17. Rear seat crossmember reinforcement assembly
18. Rear floor gusset
19. Rear floor front
20. Rear step upper panel assembly
21. Rear step lower panel assembly
22. Inside step panel
23. Rear floor seat belt anchor reinforcement
24. Rear floor rear
25. Spare tire clamp bracket
26. Rear floor side
27. Rear seat crossmember
28. 2ND rear crossmember
29. Rear center crossmember assembly
30. Front side member assembly (RH&LH)
31. Inner front towing hook bracket (RH&LH)
32. Front side member closing plate assembly (RH&LH)
33. Front side member front closing plate (RH&LH)
34. Outer front towing hook bracket (RH&LH)
35. Front side member center closing plate (RH&LH)
36. Front side member rear extension (RH&LH)
37. Front side member rear reinforcement (RH&LH)
38. Front side member outrigger assembly (RH&LH)
39. Rear side member assembly (RH&LH)
40. Rear side member extension (RH&LH)

BODY COMPONENT PARTS

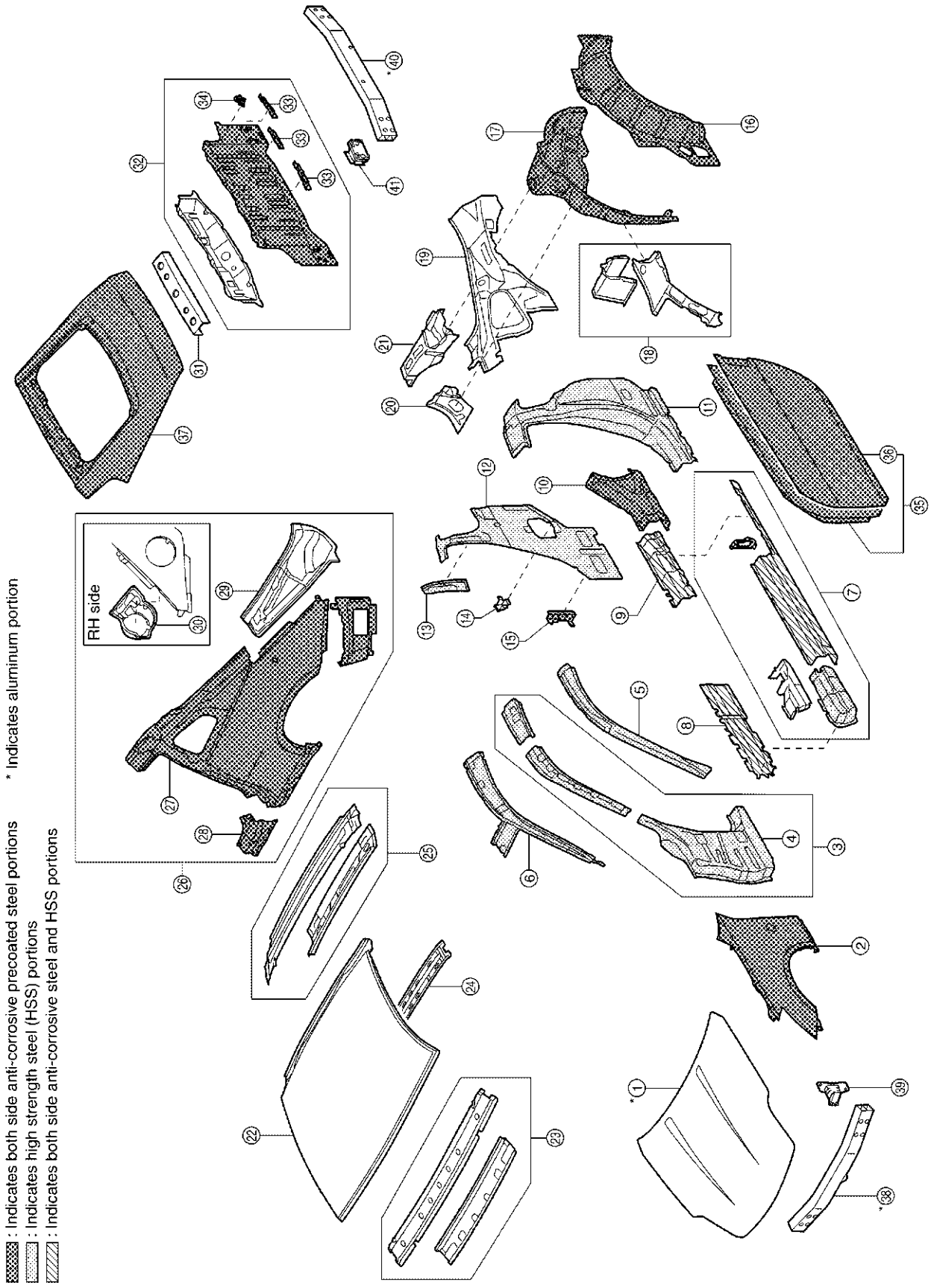

1. Hood
2. Front fender (RH&LH)
3. Front pillar reinforcement assembly (RH&LH)
4. Front pillar hinge brace (RH&LH)
5. Outer front pillar (RH&LH)
6. Inner side roof rail (RH&LH)
7. Outer sill reinforcement assembly (RH&LH)
8. Lower front pillar reinforcement (RH&LH)
9. Lower center pillar bulkhead assembly (RH&LH)
10. Outer rear wheel house extension (RH&LH)
11. Outer lock pillar reinforcement (RH&LH)
12. Inner lock pillar assembly (RH&LH)
13. Inner lock pillar reinforcement (RH&LH)
14. Seat belt anchor assembly (RH&LH)
15. Outer sill brace (RH&LH)
16. Outer rear wheel house (RH&LH)
17. Inner rear wheel house (RH&LH)
18. Inner rear pillar joint (RH&LH)
19. Inner rear pillar (RH&LH)
20. Seat back support (RH&LH)
21. Side parcel shelf (RH&LH)
22. Roof
23. Front roof rail assembly
24. Roof bow No.1
25. Rear roof rail assembly
26. Rear fender assembly (RH&LH)
27. Rear fender (RH&LH)
28. Outer sill extension (RH&LH)
29. Rear fender corner (RH&LH)
30. Fuel filler lid base
31. Parcel shelf
32. Rear panel assembly
33. Rear bumper fascia bracket
34. Rear bumper fascia center bracket (RH&LH)
35. Front door assembly (RH&LH)
36. Outer front door panel (RH&LH)
37. Back door
38. Front bumper reinforcement
39. Front bumper stay (RH&LH)
40. Rear bumper reinforcement
41. Rear bumper stay (RH&LH)

Corrosion Protection

AIS00448

DESCRIPTION

To provide improved corrosion prevention, the following anti-corrosive measures have been implemented in NISSAN production plants. When repairing or replacing body panels, it is necessary to use the same anti-corrosive measures.

Anti-corrosive precoated steel (Galvannealed steel)

To improve repairability and corrosion resistance, a new type of anti-corrosive precoated steel sheet has been adopted replacing conventional zinc-coated steel sheet.
Galvannealed steel is electroplated and heated to form Zinc-iron alloy, which provides excellent and long term corrosion resistance with cationic electrodeposition primer.

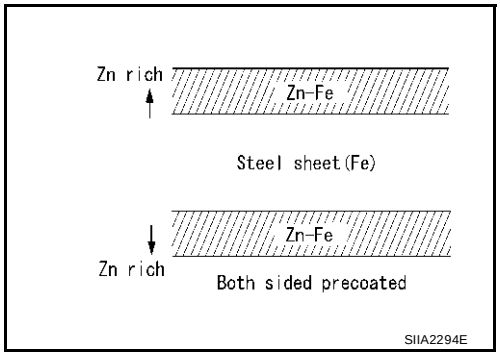

Nissan Genuine Service Parts are fabricated from galvannealed steel. Therefore, it is recommended that GENUINE NISSAN PARTS or equivalent be used for panel replacement to maintain the anti-corrosive performance built into the vehicle at the factory.

Phosphate coating treatment and cationic electrodeposition primer

A phosphate coating treatment and a cationic electrodeposition primer, which provide excellent corrosion protection, are employed on all body components.

CAUTION:

Confine paint removal during welding operations to an absolute minimum.

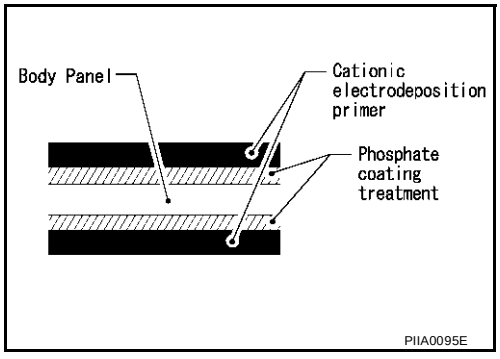

Nissan Genuine Service Parts are also treated in the same manner. Therefore, it is recommended that GENUINE NISSAN PARTS or equivalent be used for panel replacement to maintain anti-corrosive performance built into the vehicle at the factory.

ANTI-CORROSIVE WAX

To improve corrosion resistance, anti-corrosive wax is applied inside the body sill and inside other closed sections. Accordingly, when replacing these parts, be sure to apply anti-corrosive wax to the appropriate areas of the new parts. Select an excellent anti-corrosive wax which will penetrate after application and has a long shelf life.

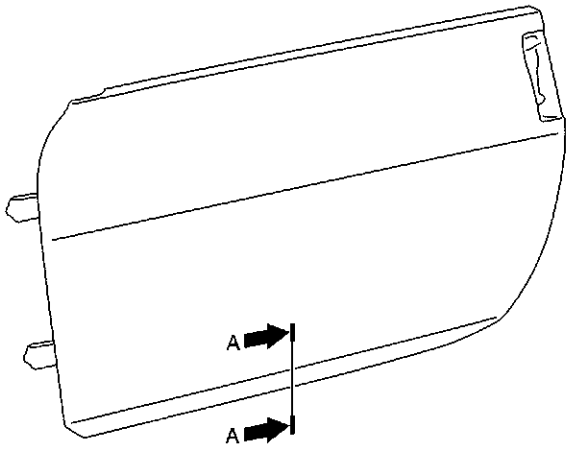

: Indicates anti-corrosive wax coated portions.

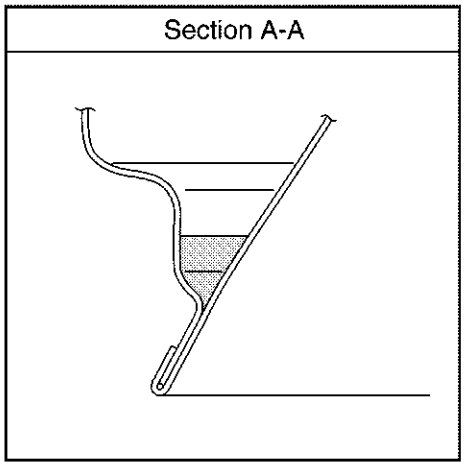

SIIA1979E

UNDERCOATING

The underside of the floor and wheelhouse are undercoated to prevent rust, vibration, noise and stone chipping. Therefore, when such a panel is replaced or repaired, apply undercoating to that part. Use an undercoating which is rust preventive, soundproof, vibration-proof, shock-resistant, adhesive, and durable.

Precautions in undercoating

1. Do not apply undercoating to any place unless specified (such as the areas above the muffler and three way catalyst which are subjected to heat).
2. Do not undercoat the exhaust pipe or other parts which become hot.
3. Do not undercoat rotating parts.
4. Apply bitumen wax after applying undercoating.
5. After putting seal on the vehicle, put undercoating on it.

: Indicates undercoated portions.

: Indicates sealed portions.

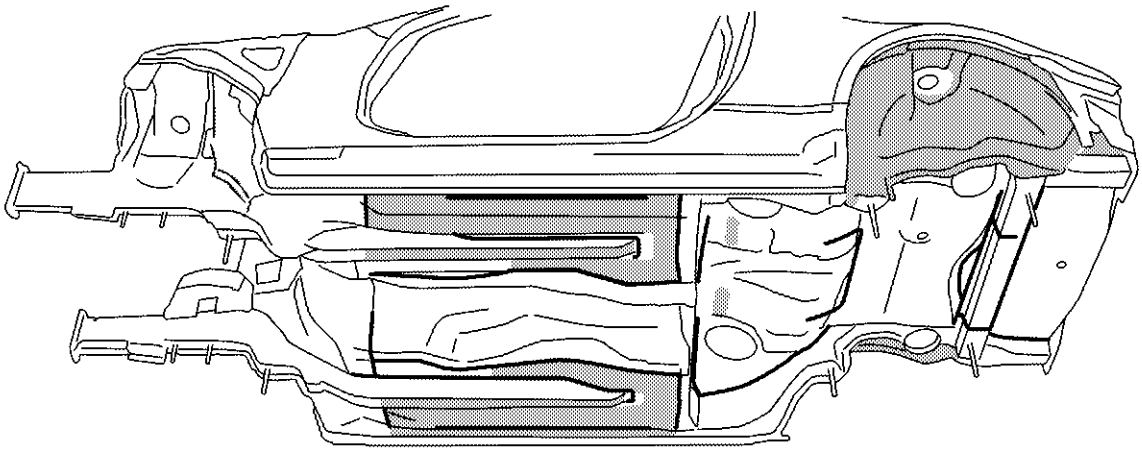

SIIA2298E

STONE GUARD COAT

To prevent damage caused by stones, the lower outer body panel (fender, door, etc.) have an additional layer of Stone Guard Coating over the ED primer coating. When replacing or repairing these panels, apply Stone Guard coating to the same portions as before. Use a coating which is rust preventive, durable, shock-resistant and has a long shelf life.

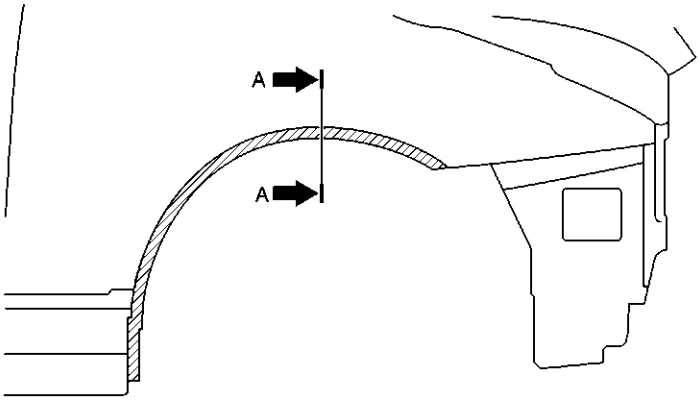

: Indicates stone guard coated portions.

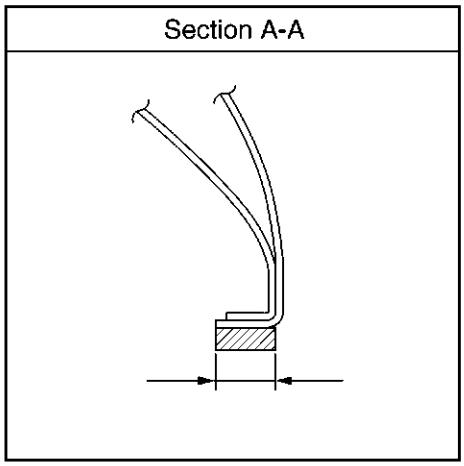

SIIA2299E

Body Sealing

AIS00449

DESCRIPTION

The following figure shows the areas which are sealed at the factory. Sealant which has been applied to these areas should be smooth and free from cuts or gaps. Care should be taken not to apply an excess amount of sealant and not to allow other unaffected parts to come into contact with the sealant.

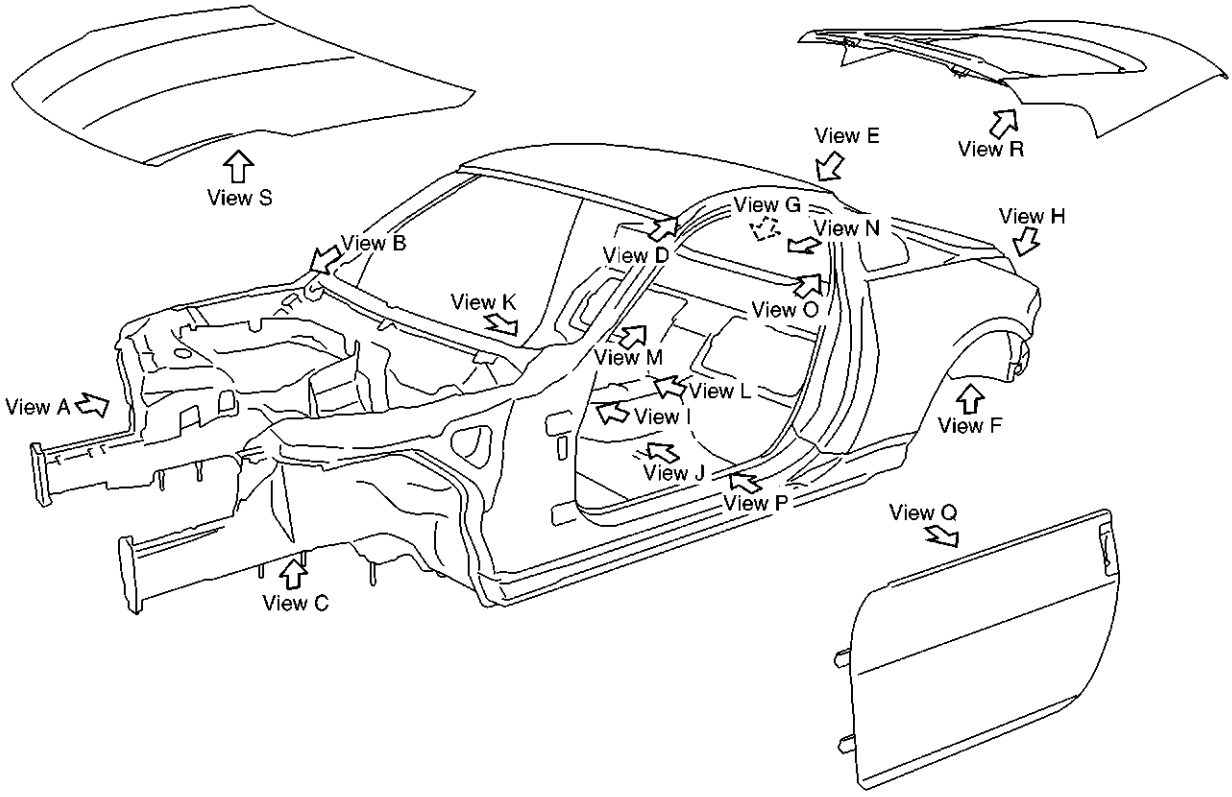

View A	View B
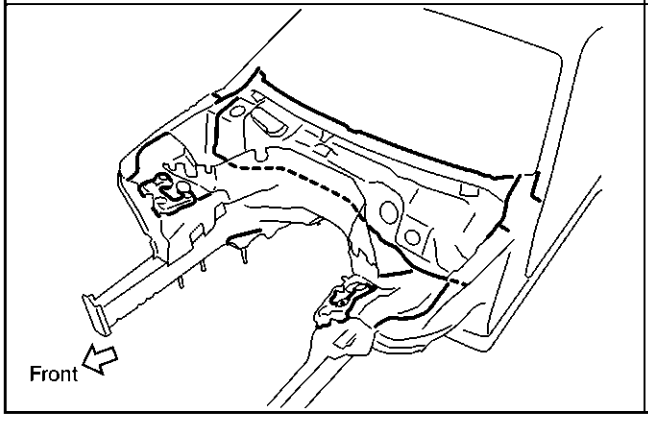	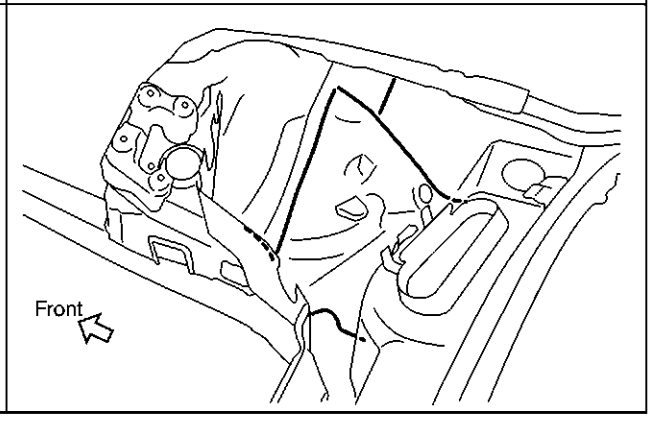

SIIA1976E

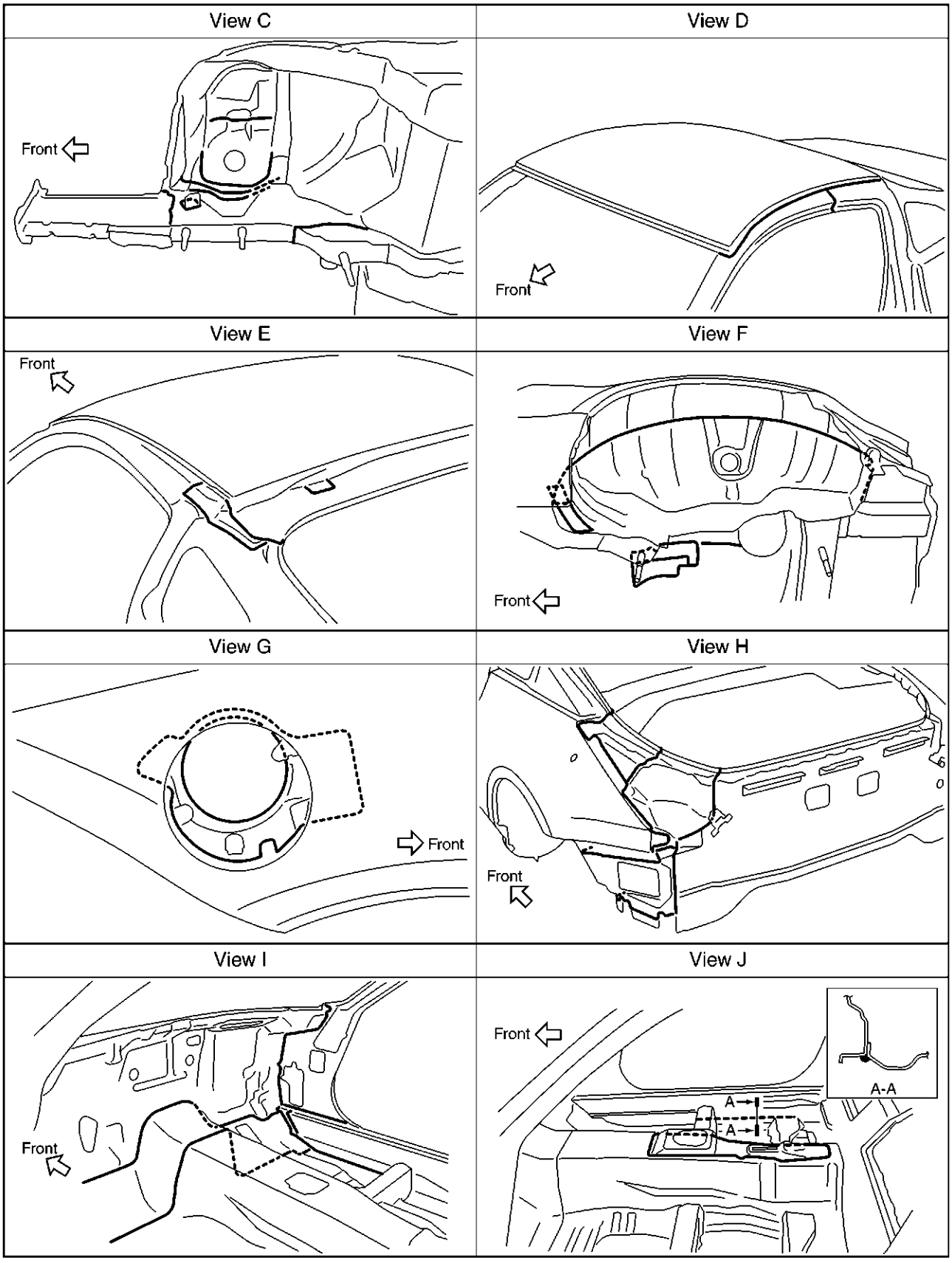
View C
Front
View D
Front
View E
Front
View F
Front
View G
Front
View H
Front
View I
Front
View J
Front
A
A
A-A

SIIA1977E

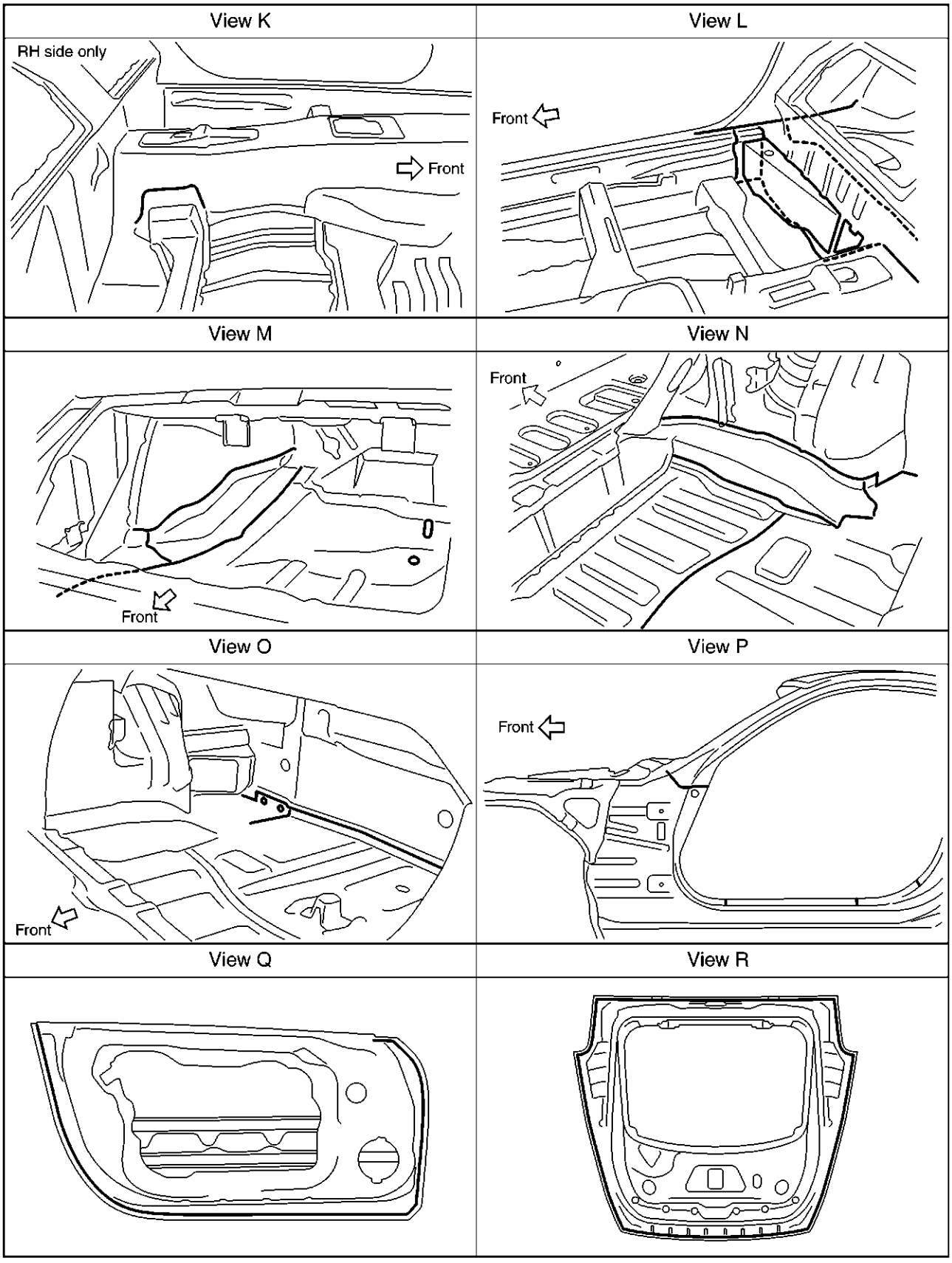
View K
RH side only
Front
View L
Front
View M
Front
View N
Front
View O
Front
View P
Front
View Q
View R

SIIA1978E

View S

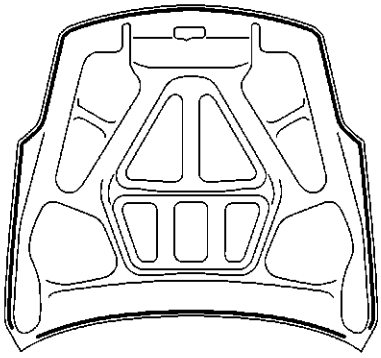

SIIA2335E

Body Construction
BODY CONSTRUCTION

AIS0044A

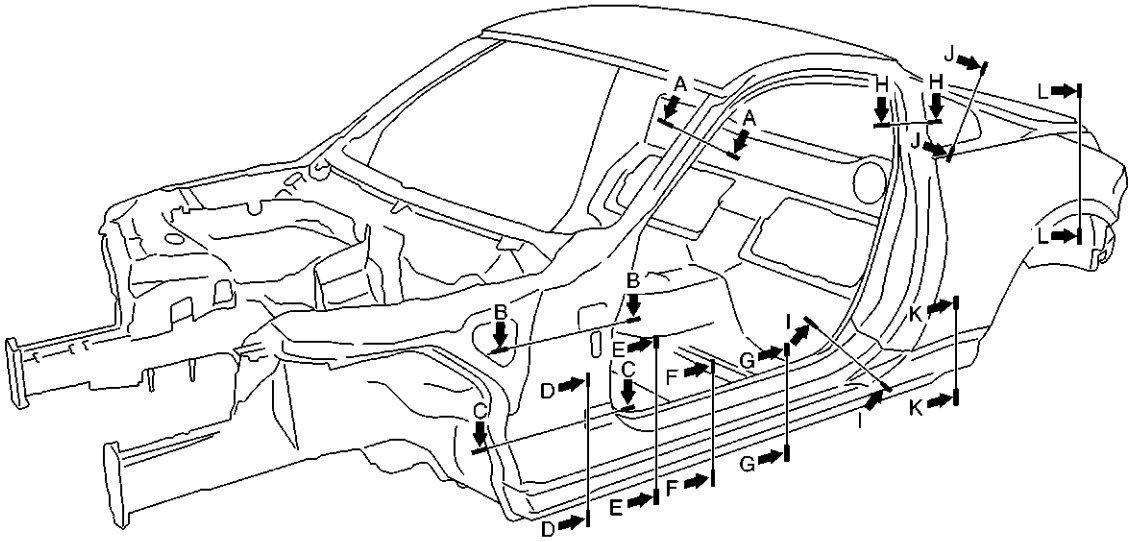

Section A-A	Section B-B	Section C-C	Section D-D
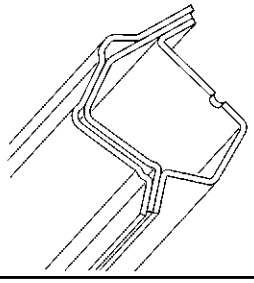	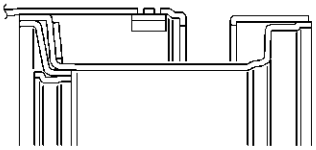	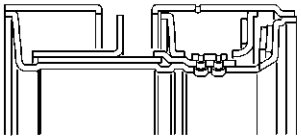	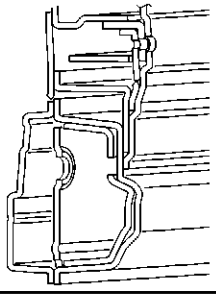
Section E-E	**Section F-F**	**Section G-G**	**Section H-H**
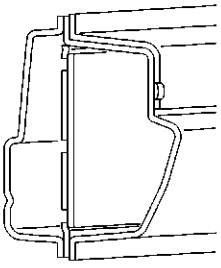	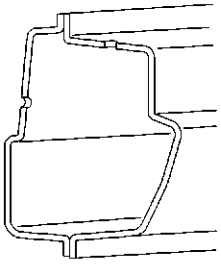	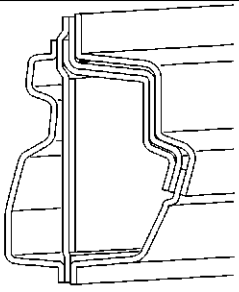	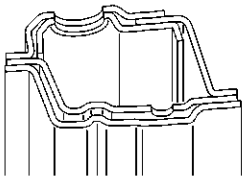
Section I-I	**Section J-J**	**Section K-K**	**Section L-L**
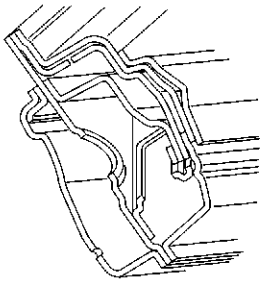	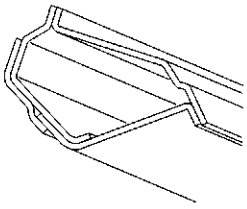	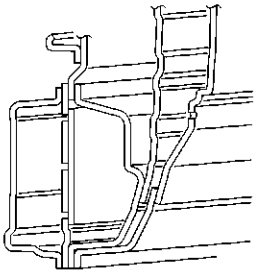	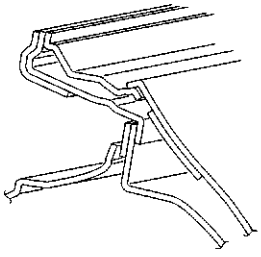

SIIA1971E

Body Alignment

AIS0044B

BODY CENTER MARKS

A mark has been placed on each part of the body to indicate the vehicle center. When repairing parts damaged by an accident which might affect the vehicle frame (members, pillars, etc.), more accurate and effective repair will be possible by using these marks together with body alignment specifications.

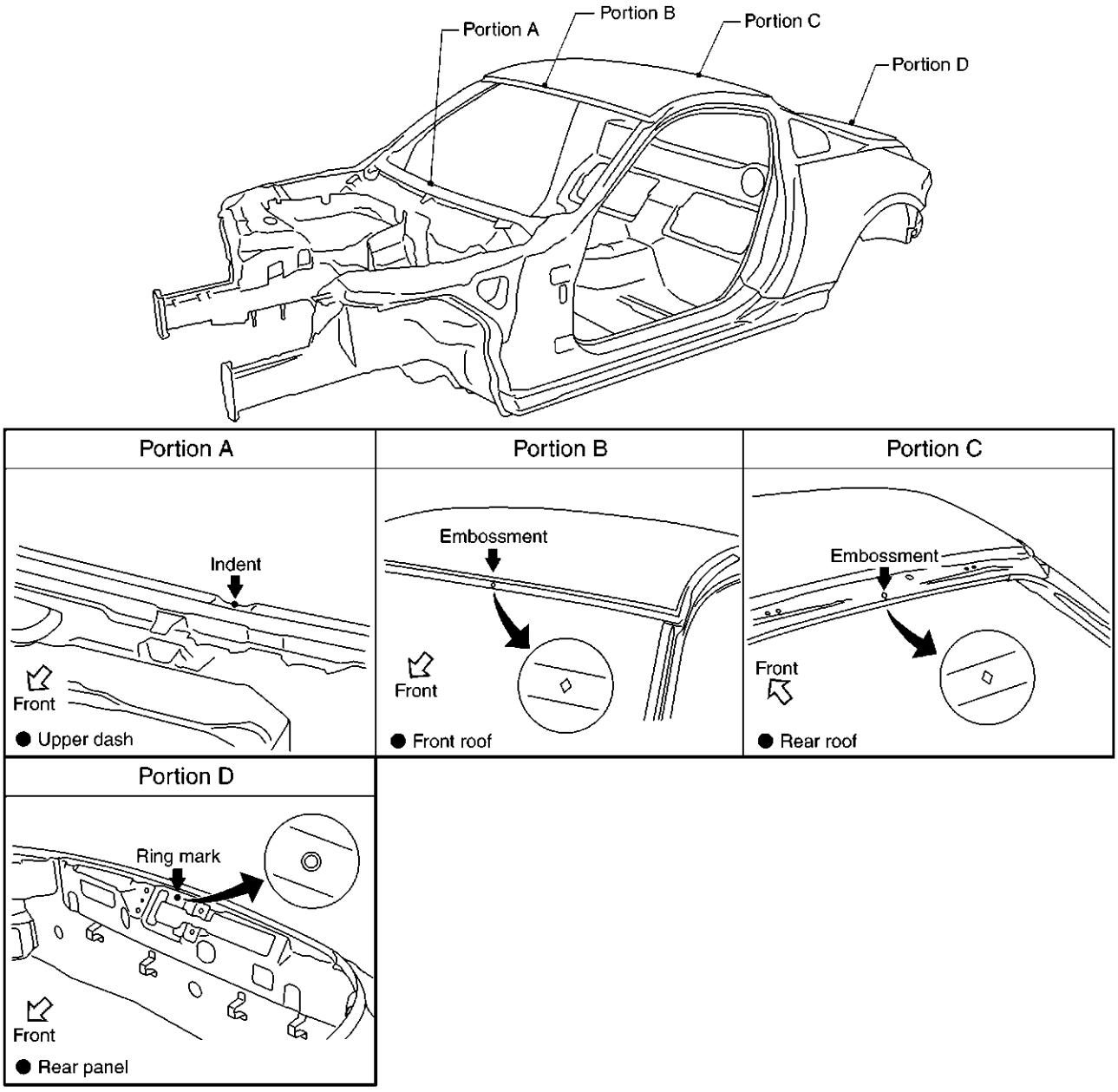

SIIA1974E

PANEL PARTS MATCHING MARKS

A mark has been placed on each body panel to indicate the parts matching positions. When repairing parts damaged by an accident which might affect the vehicle structure (members, pillars, etc.), more accurate and effective repair will be possible by using these marks together with body alignment specifications.

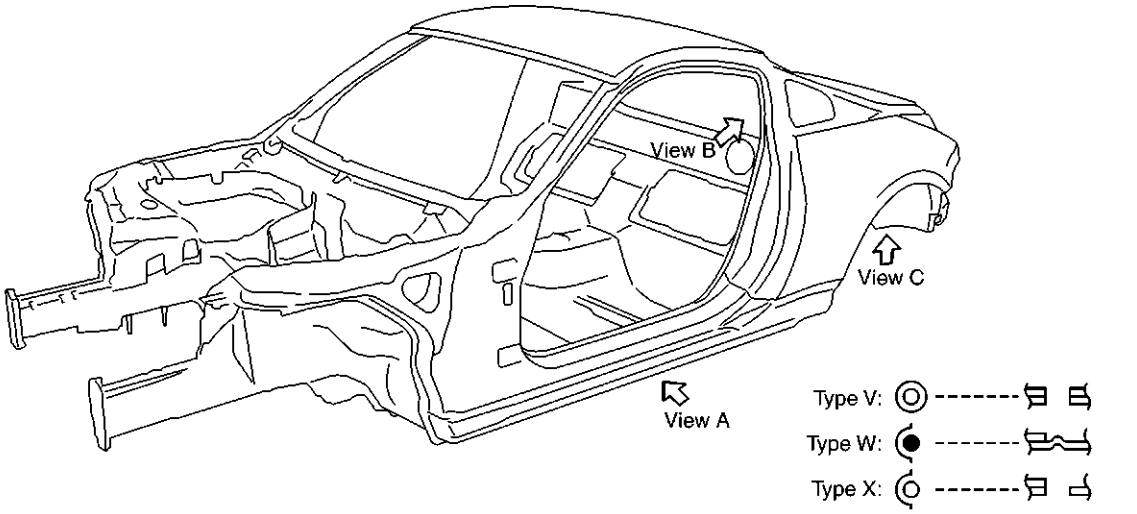

View A	View B	View C
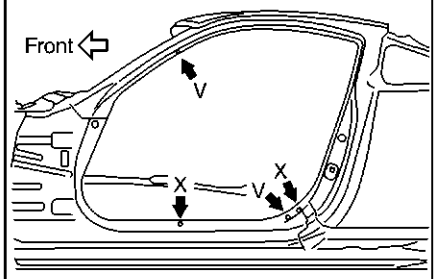	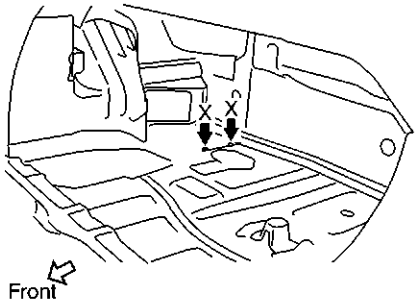	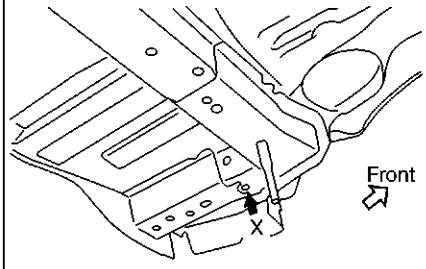

SIIA1981E

DESCRIPTION

- All dimensions indicated in the figures are actual.
- When using a tracking gauge, adjust both pointers to equal length. Then check the pointers and gauge itself to make sure there is no free play.
- When a measuring tape is used, check to be sure there is no elongation, twisting or bending.
- Measurements should be taken at the center of the mounting holes.
- An asterisk (*) following the value at the measuring point indicates that the measuring point on the other side is symmetrically the same value.
- The coordinates of the measurement points are the distances measured from the standard line of ″X″, ″Y″ and ″Z″.

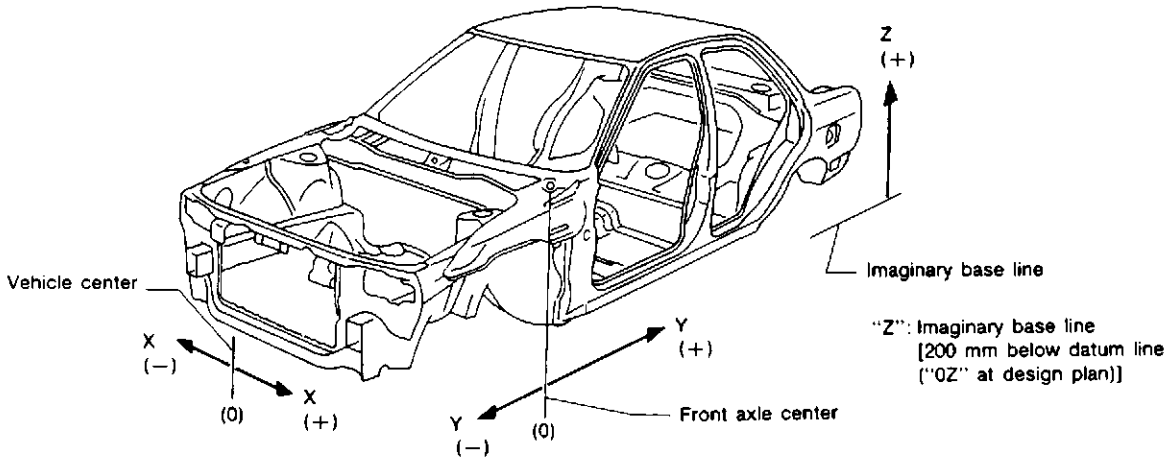

PIIA0104E

ENGINE COMPARTMENT

Measurement

Figures marked with a (*) indicate symmetrically identical dimensions on both right and left hand sides of the vehicle.

Unit : mm

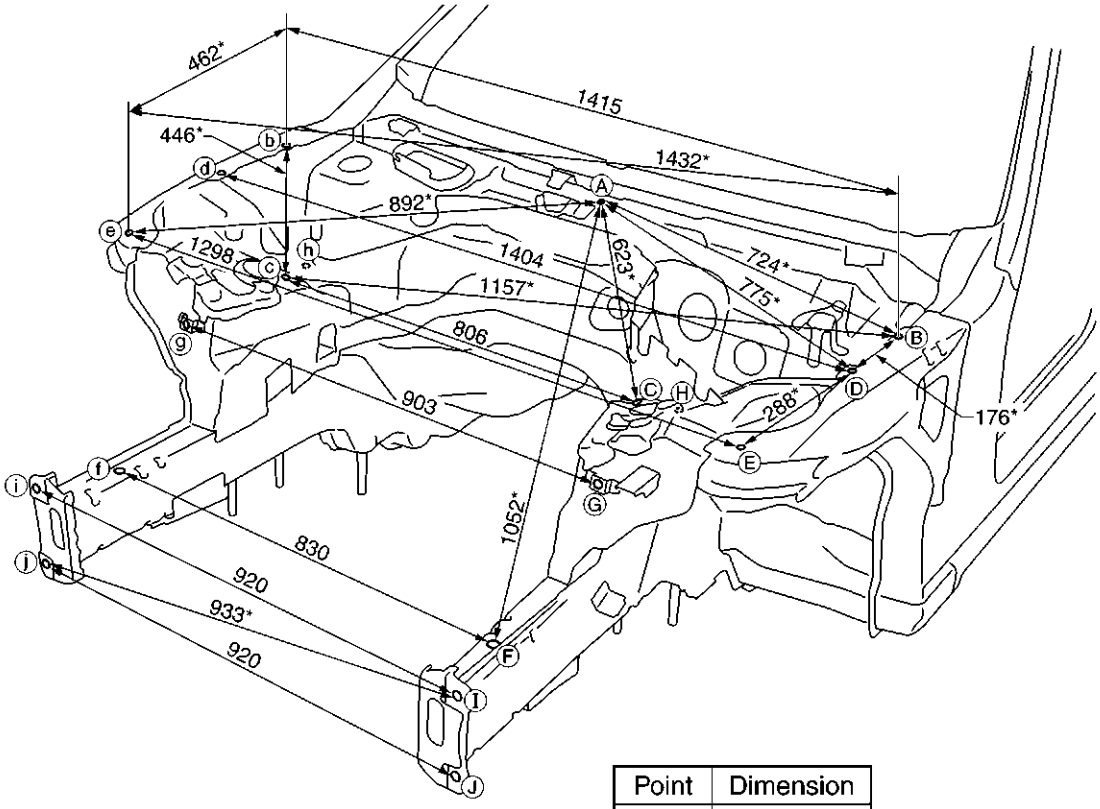

Point	Dimension
Ⓒ~ⓖ	883*
Ⓗ~ⓗ	903

SIIA2306E

Measurement points

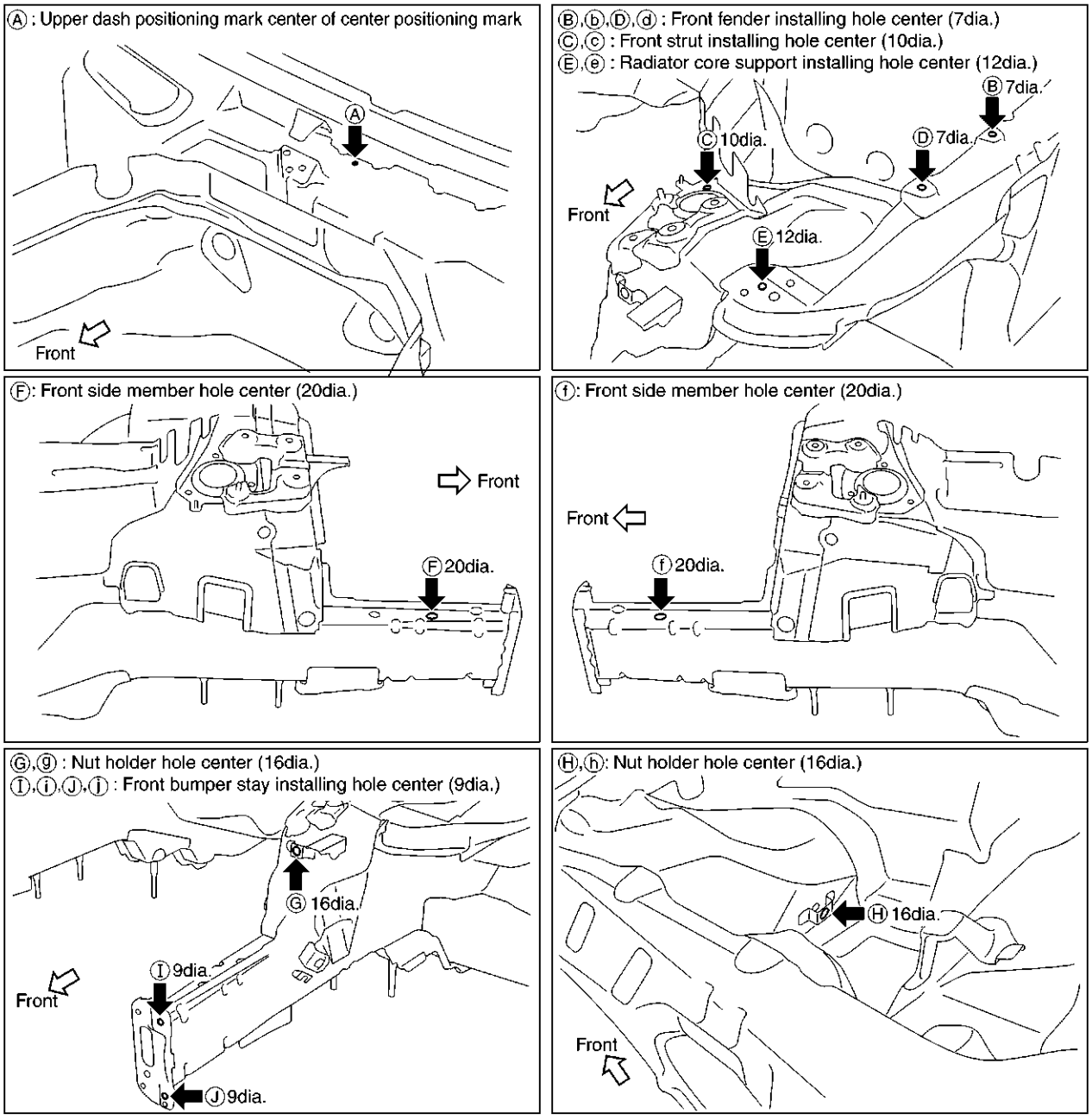

SIIA2307E

UNDERBODY
Measurement

Unit : mm

Figures marked with a (*) indicate symmetrically identical dimensions on both right and left hand sides of the vehicle.

As viewed from underside.

★ : Bolt head

All dimensions indicated in this figure are actual.

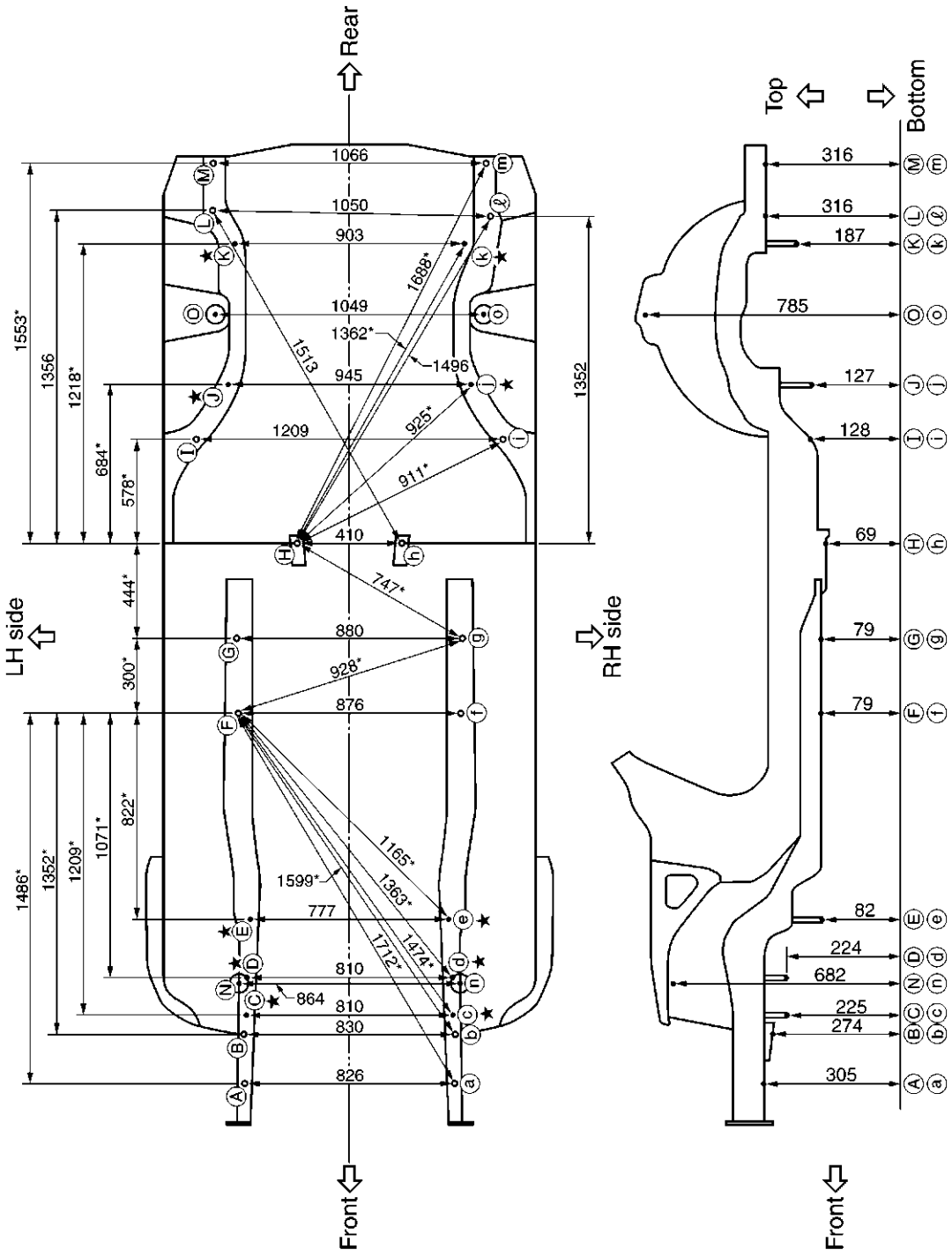

SIIA1986E

Measurement points

Unit : mm

As viewed from underside.

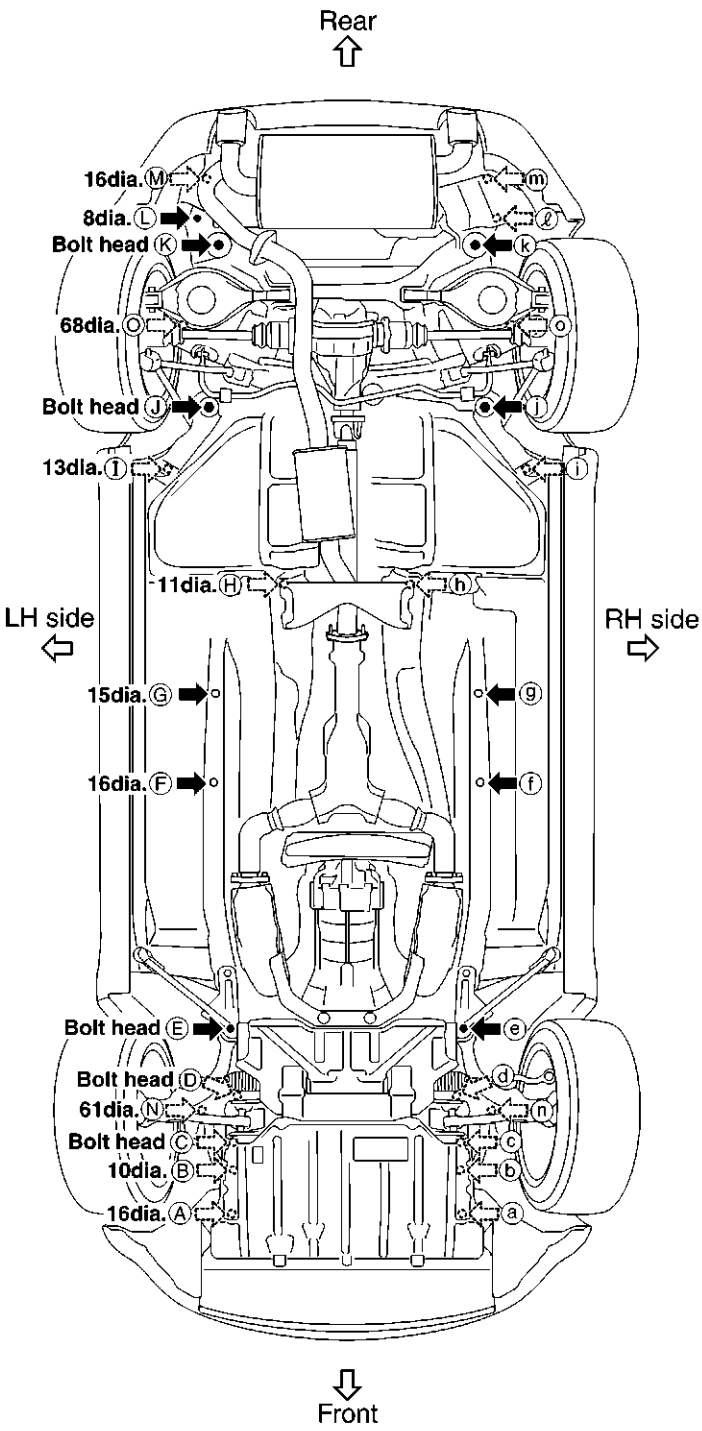

Coordinates:

Ⓐ,ⓐ	Ⓘ,ⓘ
X:413	X:605
Y:-368	Y:2191
Z:305	Z:128
Ⓑ,ⓑ	Ⓙ,ⓙ
X:415	X:473
Y:-238	Y:2404
Z:274	Z:127
Ⓒ,ⓒ	Ⓚ,ⓚ
X:405	X:452
Y:-100	Y:2964
Z:225	Z:187
Ⓓ,ⓓ	Ⓛ
X:405	X:550
Y:39	Y:3065
Z:224	Z:316
Ⓔ,ⓔ	ⓛ
X:388	X:-500
Y:279	Y:3073
Z:82	Z:316
Ⓕ,ⓕ	Ⓜ,ⓜ
X:438	X:533
Y:1100	Y:3275
Z:79	Z:316
Ⓖ,ⓖ	
X:440	
Y:1400	
Z:79	
Ⓗ,ⓗ	
X:205	
Y:1777	
Z:69	

Front and rear strut tower centers

Coordinates:

Ⓝ,ⓝ
X:432
Y:28
Z:682

Ⓞ,ⓞ
X:524
Y:2682
Z:785

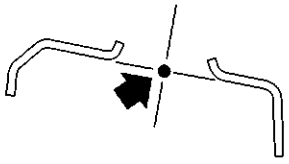

Front: Ⓝ,ⓝ 61dia.
Rear: Ⓞ,ⓞ 68dia.

SIIA1987E

PASSENGER COMPARTMENT
Measurement

Unit : mm

Figures marked with a (*) indicate symmetrically identical dimensions on both right and left hand sides of the vehicle.

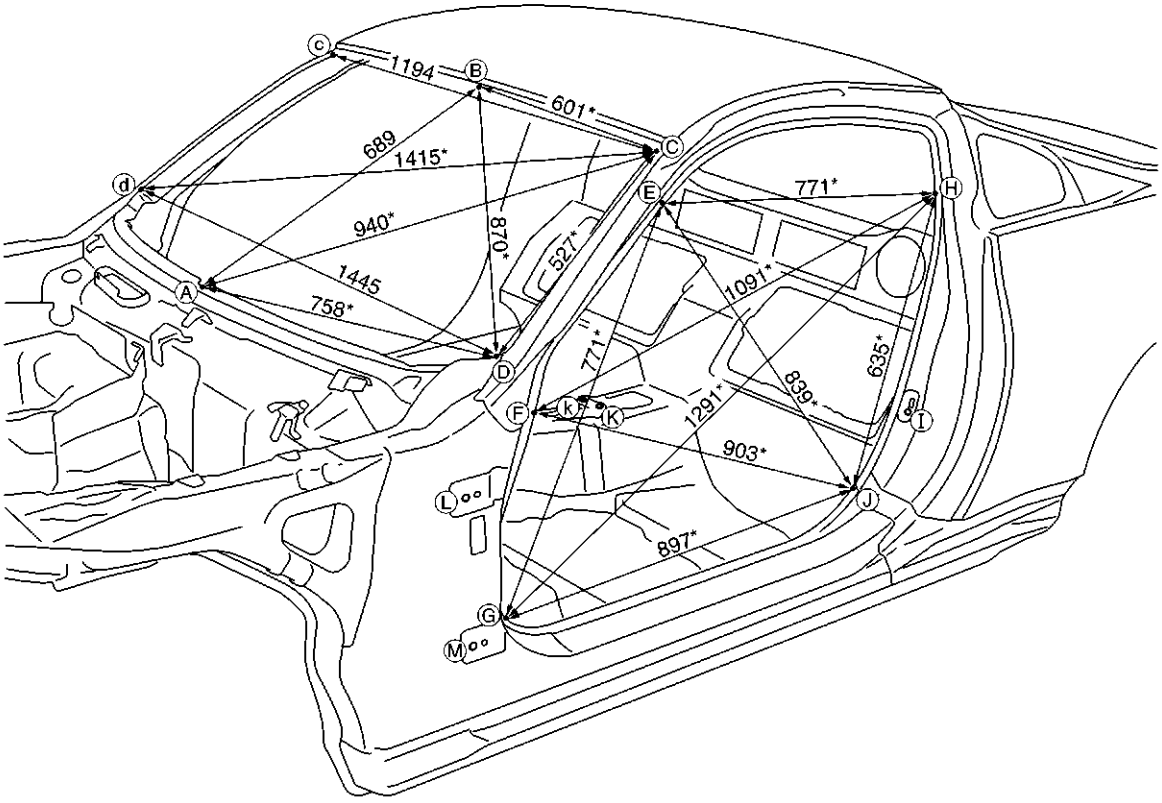

Point	Dimension	Point	Dimension	Point	Dimension
Ⓔ~ⓔ	1,317	Ⓖ~ⓗ	1,909*	Ⓚ~Ⓕ	1,052*
Ⓔ~ⓖ	1,583*	Ⓖ~ⓙ	1,707*	Ⓚ~Ⓖ	1,043*
Ⓔ~ⓗ	1,546*	Ⓗ~ⓗ	1,363	Ⓚ~Ⓗ	956*
Ⓔ~ⓙ	1,618*	Ⓗ~ⓙ	1,543*	Ⓚ~Ⓙ	715*
Ⓕ~ⓕ	1,440	Ⓙ~ⓙ	1,452	Ⓛ~Ⓘ	1,178*
Ⓖ~ⓖ	1,452	Ⓚ~Ⓔ	993*	Ⓜ~Ⓘ	1,181*

SIIA1988E

Measurement points

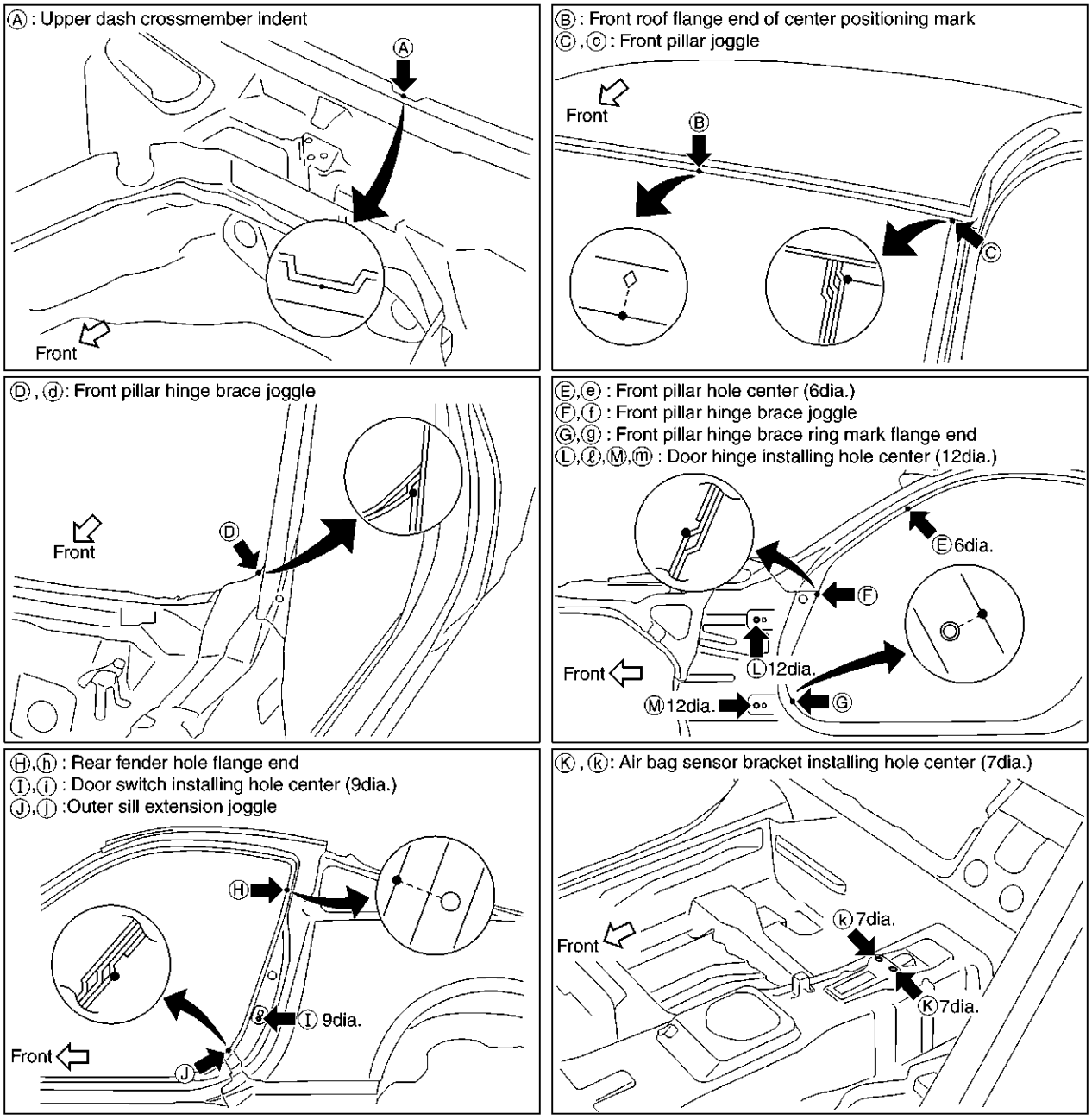

SIIA1989E

REAR BODY
Measurement

Figures marked with a (*) indicate symmetrically identical dimensions on both right and left hand sides of the vehicle.

Unit : mm

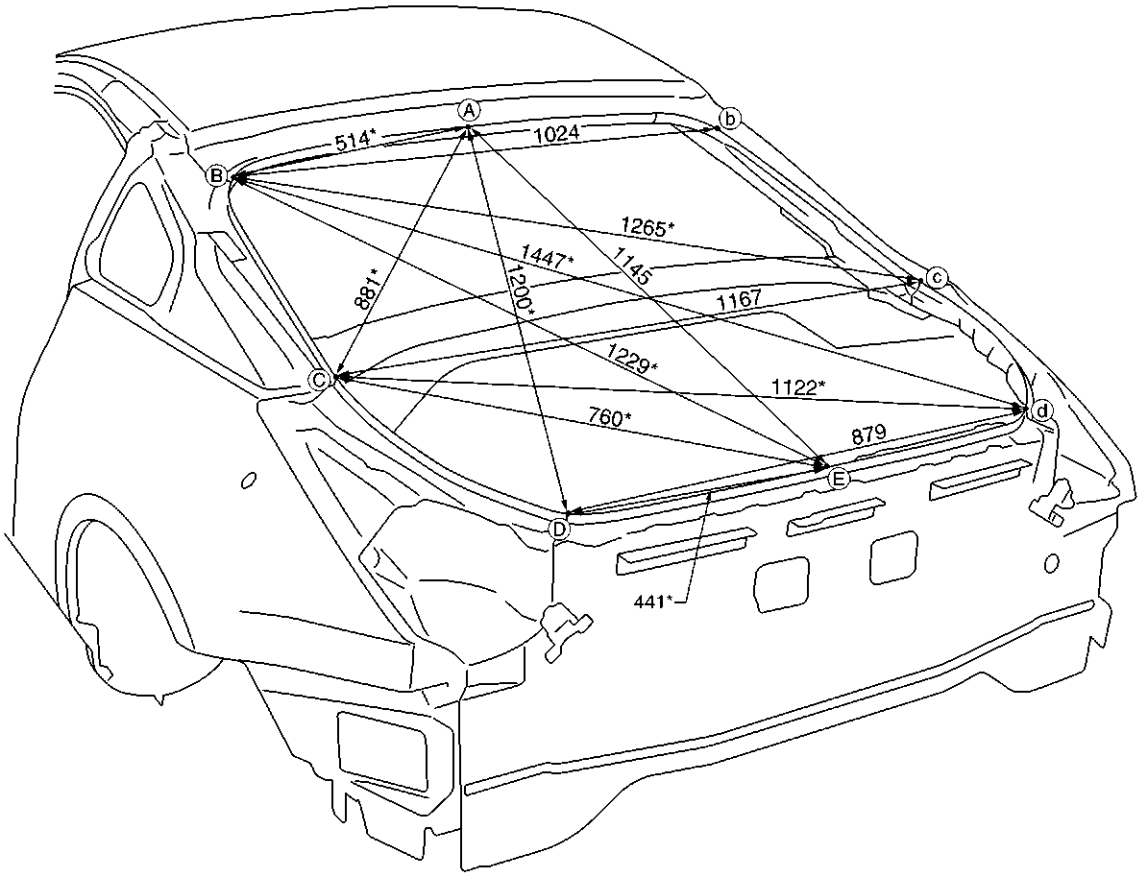

SIIA1990E

Measurement points

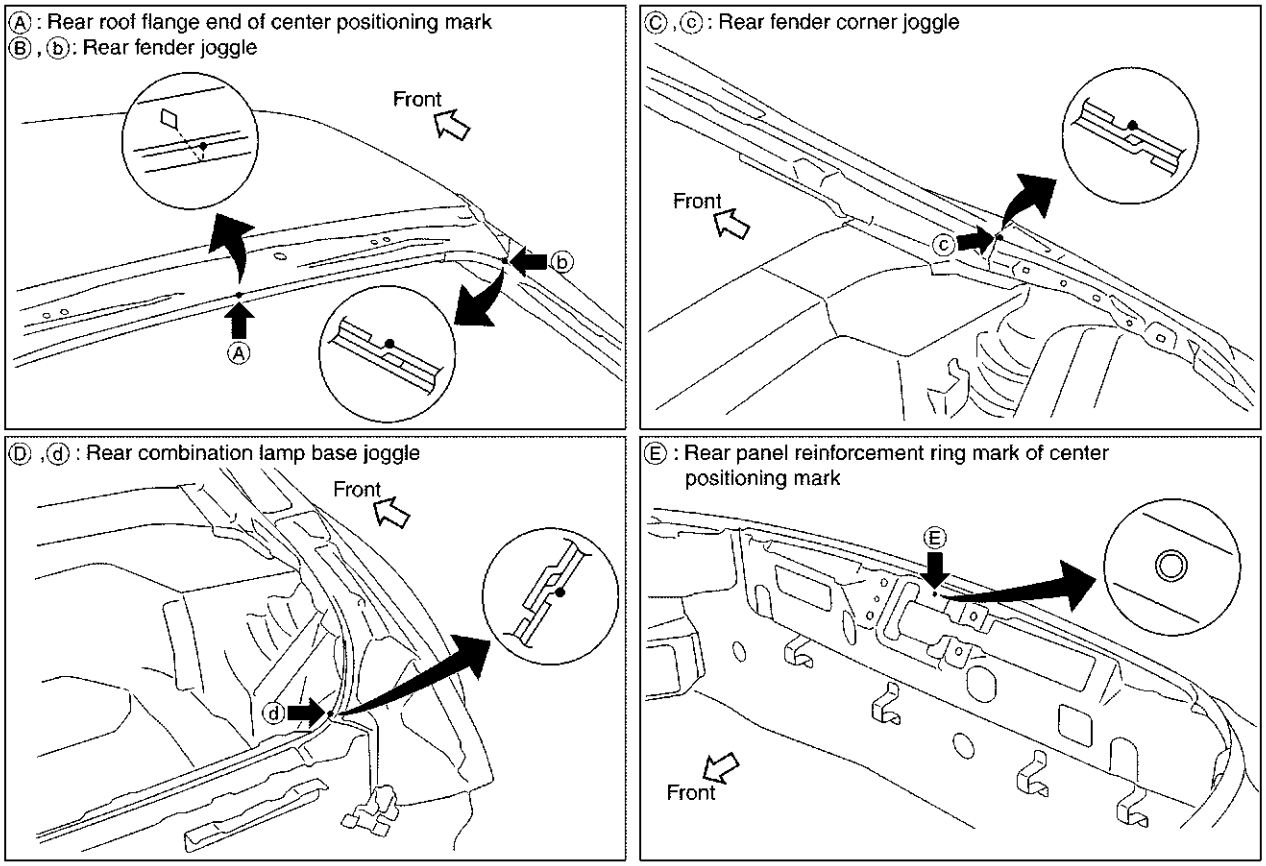

SIIA1991E

Handling Precautions For Plastics

AIS0044C

HANDLING PRECAUTIONS FOR PLASTICS

Abbre-viation	Material name	Heat resisting temperature °C(°F)	Resistance to gasoline and solvents	Other cautions
PE	Polyethylene	60(140)	Gasoline and most solvents are harmless if applied for a very short time (wipe up quickly).	Flammable
PVC	Poly Vinyl Chloride	80(176)	Same as above.	Poison gas is emitted when burned.
EPM/ EPDM	Ethylene Propylene (Diene) copolymer	80(176)	Same as above.	Flammable
PP	Polypropylene	90(194)	Same as above.	Flammable, avoid battery acid.
UP	Unsaturated Polyester	90(194)	Same as above.	Flammable
PS	Polystyrene	80(176)	Avoid solvents.	Flammable
ABS	Acrylonitrile Butadiene Styrene	80(176)	Avoid gasoline and solvents.	
AES	Acrylonitrile Ethylene Styrene	80(176)	Same as above.	
PMMA	Poly Methyl Methacrylate	85(185)	Same as above.	
EVAC	Ethylene Vinyl Acetate	90(194)	Same as above.	
ASA	Acrylonitrile Styrene Acrylate	100(222)	Same as above.	Flammable
PPE	Poly Phenylene Ether	110(230)	Same as above.	
PC	Polycarbonate	120(248)	Same as above.	
PAR	Polyarylate	180(356)	Same as above.	
PUR	Polyurethane	90(194)	Same as above.	
POM	Poly Oxymethylene	120(248)	Same as above.	Avoid battery acid.
PBT+ PC	Poly Butylene Terephthalate + Polycarbonate	120(248)	Same as above.	Flammable
PA	Polyamide	140(284)	Same as above.	Avoid immersing in water.
PBT	Poly Butylene Terephthalate	140(284)	Same as above.	
PET	Polyester	180(356)	Same as above.	
PEI	Polyetherimide	200(392)	Same as above.	

1. When repairing and painting a portion of the body adjacent to plastic parts, consider their characteristics (influence of heat and solvent) and remove them if necessary or take suitable measures to protect them.
2. Plastic parts should be repaired and painted using methods suiting the materials' characteristics.

LOCATION OF PLASTIC PARTS

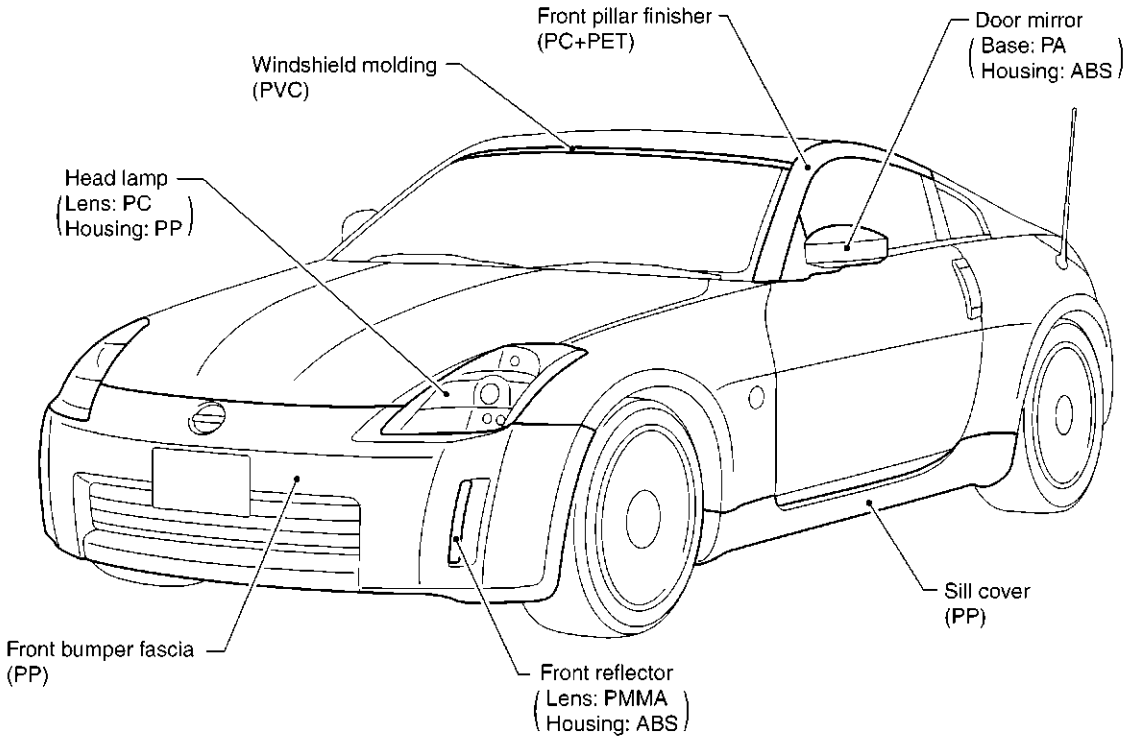

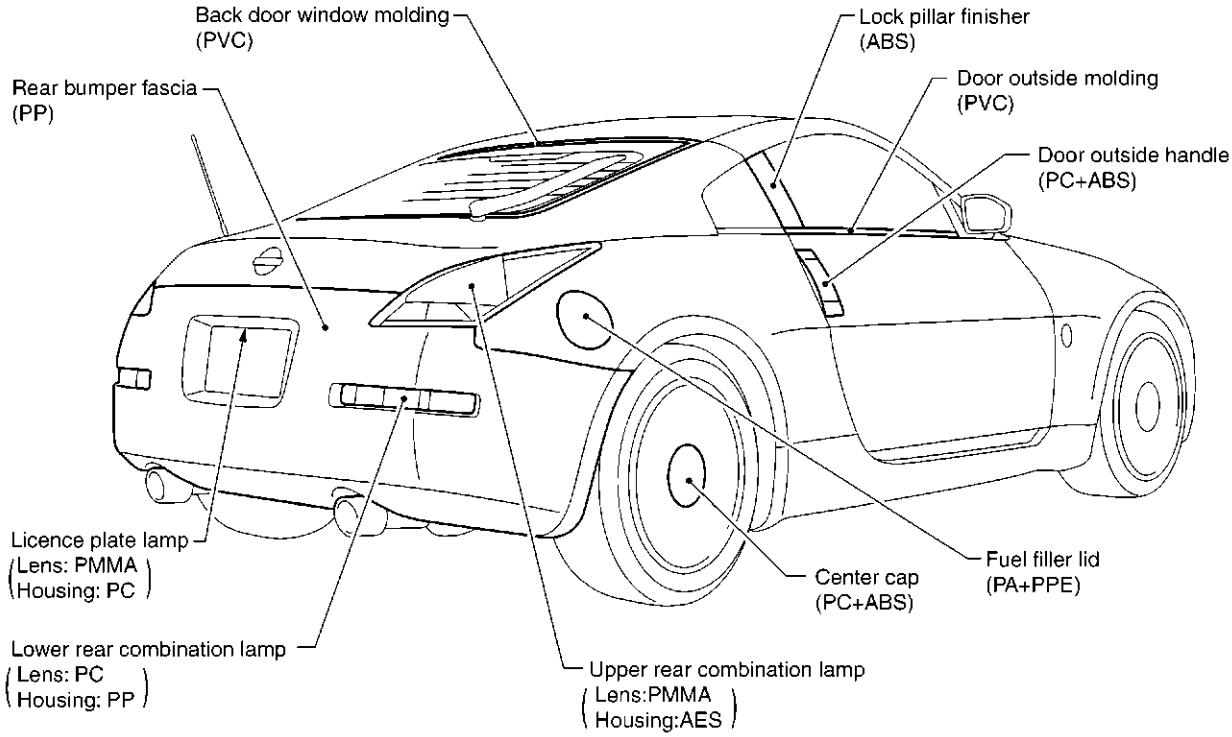

SIIA1982E

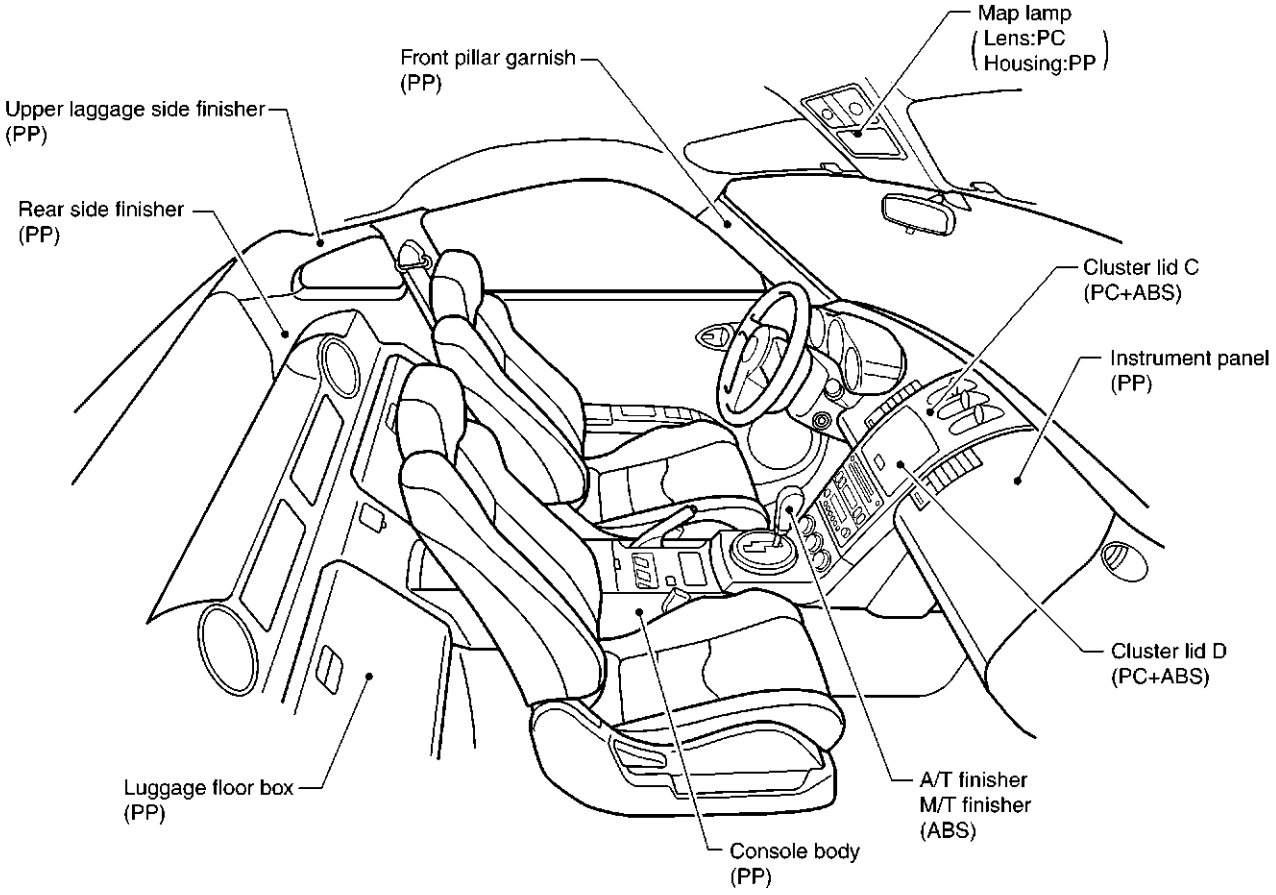
Map lamp
(Lens:PC
Housing:PP)
Front pillar garnish
(PP)
Upper laggage side finisher
(PP)
Rear side finisher
(PP)
Cluster lid C
(PC+ABS)
Instrument panel
(PP)
Cluster lid D
(PC+ABS)
Luggage floor box
(PP)
A/T finisher
M/T finisher
(ABS)
Console body
(PP)

SIIA1983E

Precautions In Repairing High Strength Steel

AIS0044D

High strength steel is used for body panels in order to reduce vehicle weight.
Accordingly, precautions in repairing automotive bodies made of high strength steel are described below:

HIGH STRENGTH STEEL (HSS) USED IN NISSAN VEHICLES

Tensile strength	Nissan/Infiniti designation	Major applicable parts
373 N/mm^2 (38kg/mm^2 ,54klb/sq in)	SP130	● Front & rear side member assembly ● Hoodledge assembly ● Upper dash ● Body side ● Other reinforcements
785-981 N/mm^2 (80-100kg/mm^2 ,114-142klb/sq in)	SP150	● Front door guard beam

SP130 is the most commonly used HSS.

Read the following precautions when repairing HSS:

1. Additional points to consider

- The repair of reinforcements (such as side members) by heating is not recommended since it may weaken the component. When heating is unavoidable, do not heat HSS parts above 550°C (1,022°F).
  Verify heating temperature with a thermometer.
  (Crayon-type and other similar type thermometer are appropriate.)

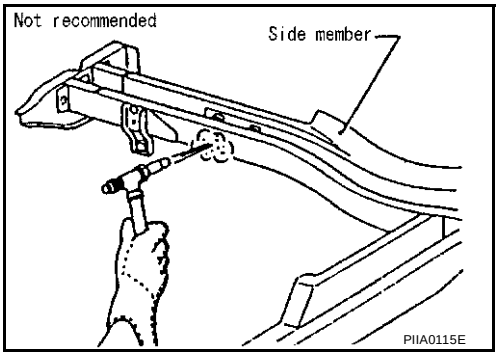

- When straightening body panels, use caution in pulling any HSS panel. Because HSS is very strong, pulling may cause deformation in adjacent portions of the body. In this case, increase the number of measuring points, and carefully pull the HSS panel.

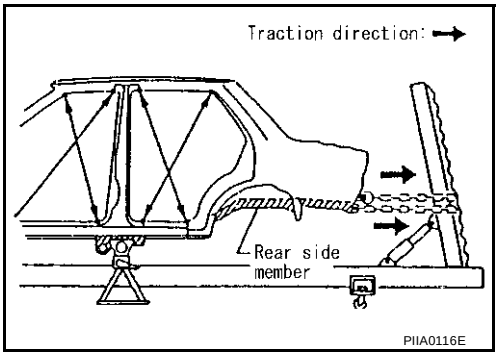

- When cutting HSS panels, avoid gas (torch) cutting if possible. Instead, use a saw to avoid weakening surrounding areas due to heat. If gas (torch) cutting is unavoidable, allow a minimum margin of 50 mm (1.97in).

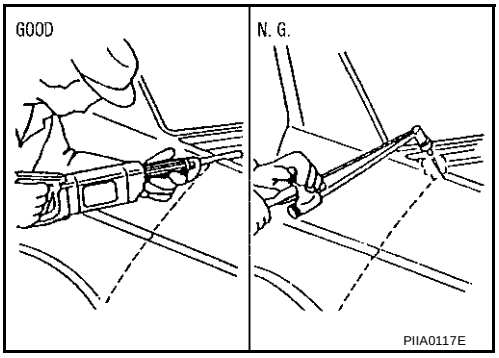

- When welding HSS panels, use spot welding whenever possible in order to minimize weakening surrounding areas due to heat.
  If spot welding is impossible, use M.I.G. welding. Do not use gas (torch) welding because it is inferior in welding strength.

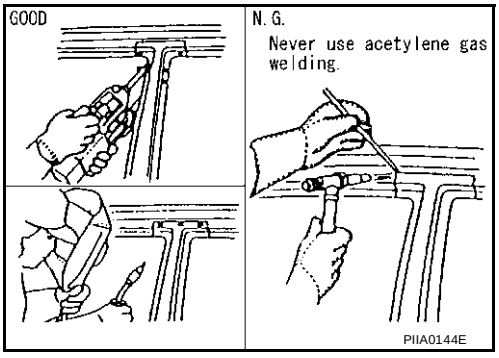

- The spot weld on HSS panels is harder than that of an ordinary steel panel.
  Therefore, when cutting spot welds on a HSS panel, use a low speed high torque drill (1,000 to 1,200 rpm) to increase drill bit durability and facilitate the operation.

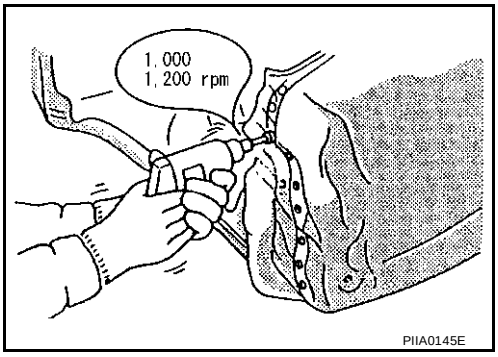

2. Precautions in spot welding HSS
   This work should be performed under standard working conditions. Always note the following when spot welding HSS:
   - The electrode tip diameter must be sized properly according to the metal thickness.

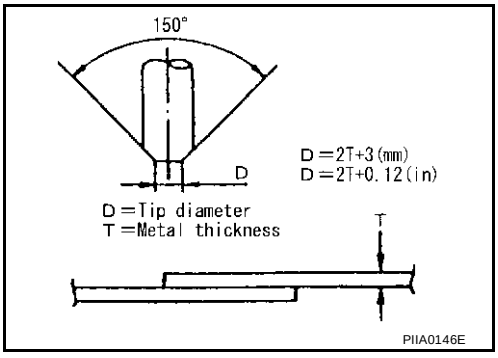

- The panel surfaces must fit flush to each other, leaving no gaps.

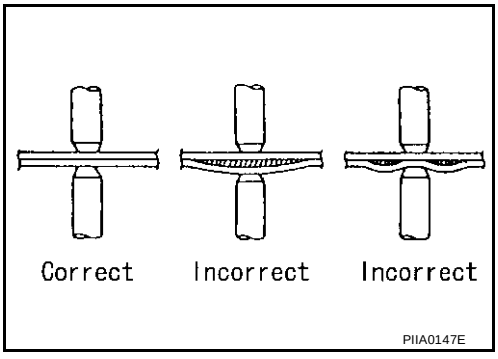

- Follow the specifications for the proper welding pitch.

Unit:mm

Thickness (t)	Minimum pitch (l)
0.6 (0.024)	10 (0.39) or over
0.8 (0.031)	12 (0.47) or over
1.0 (0.039)	18 (0.71) or over
1.2 (0.047)	20 (0.79) or over
1.6 (0.063)	27 (1.06) or over
1.8 (0.071)	31 (1.22) or over

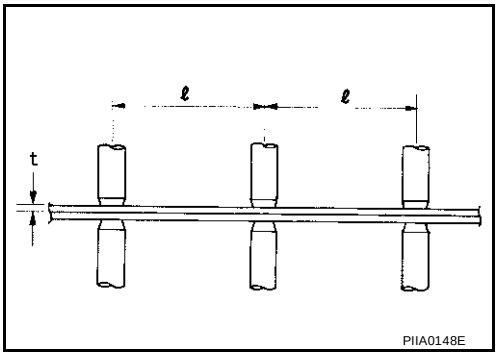

Replacement Operations

AIS0044E

DESCRIPTION

This section is prepared for technicians who have attained a high level of skill and experience in repairing collision-damaged vehicles and also use modern service tools and equipment. Persons unfamiliar with body repair techniques should not attempt to repair collision-damaged vehicles by using this section.

Technicians are also encouraged to read Body Repair Manual (Fundamentals) in order to ensure that the original functions and quality of the vehicle can be maintained. The Body Repair Manual (Fundamentals) contains additional information, including cautions and warning, that are not including in this manual. Technicians should refer to both manuals to ensure proper repairs.

Please note that these information are prepared for worldwide usage, and as such, certain procedures might not apply in some regions or countries.

The symbols used in this section for cutting and welding / brazing operations are shown below.

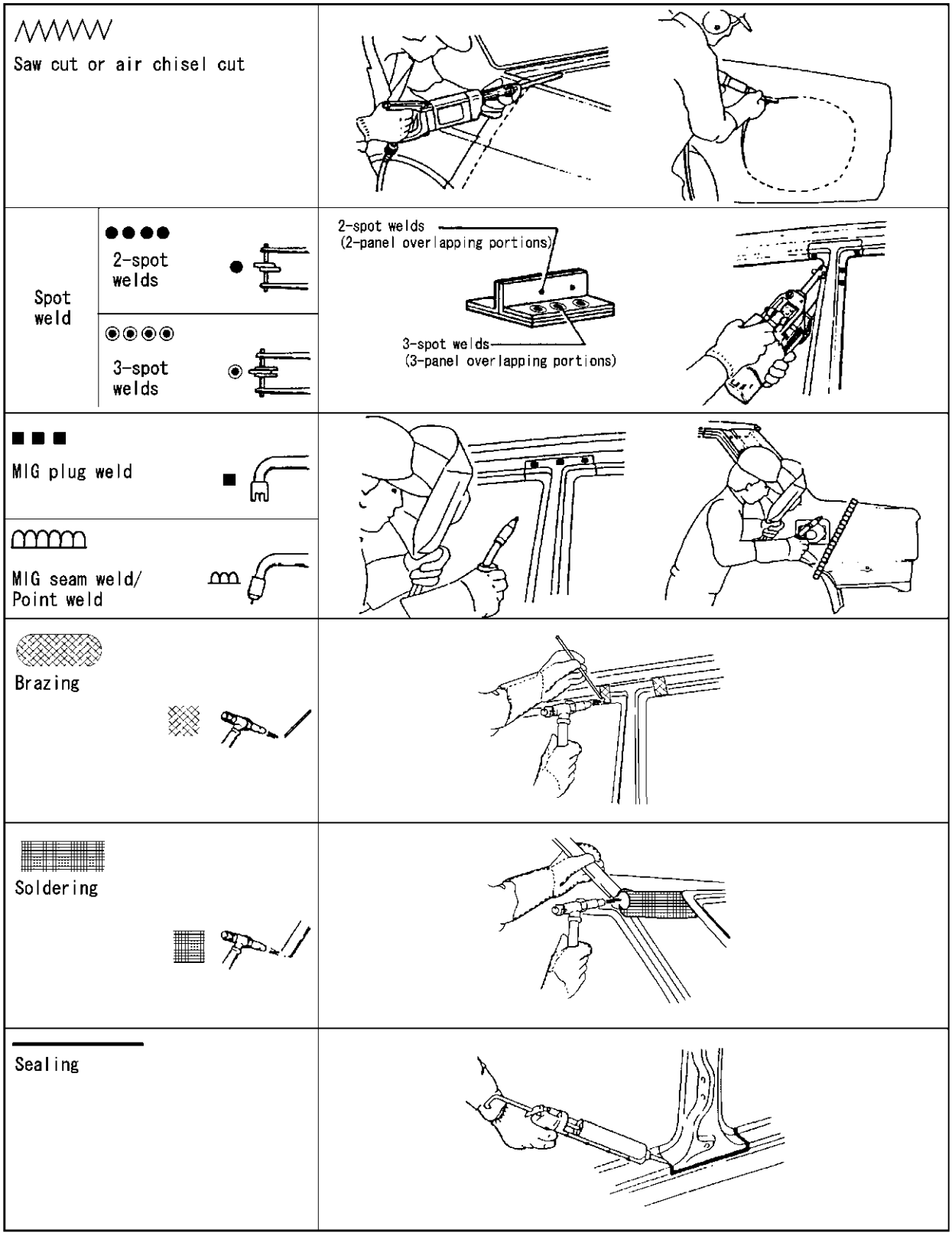

PIIA0149E

- Front pillar butt joint can be determined anywhere within shaded area as shown in the figure. The best location for the butt joint is at position A due to the construction of the vehicle. Refer to the front pillar section.

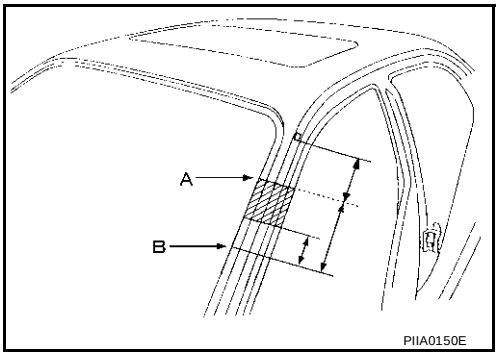

- Determine cutting position and record distance from the locating indent. Use this distance when cutting the service part. Cut outer front pillar over 60 mm above inner front pillar cut position.

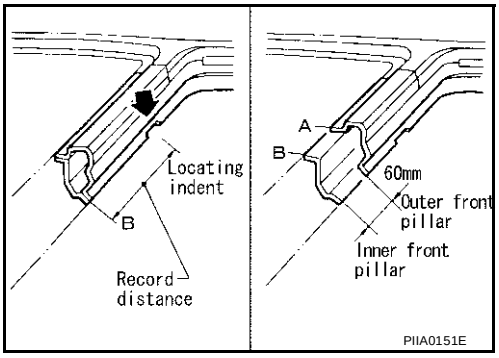

- Prepare a cutting jig to make outer pillar easier to cut. Also, this will permit service part to be accurately cut at joint position.

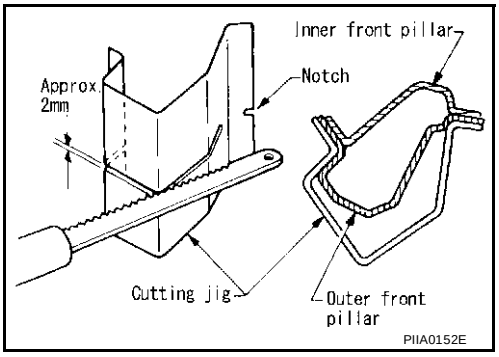

- An example of cutting operation using a cutting jig is as follows.

1. Mark cutting lines.
   A: Cut position of outer pillar
   B: Cut position of inner pillar
2. Align cutting line with notch on jig. Clamp jig to pillar.
3. Cut outer pillar along groove of jig. (At position A)
4. Remove jig and cut remaining portions.
5. Cut inner pillar at position B in same manner.

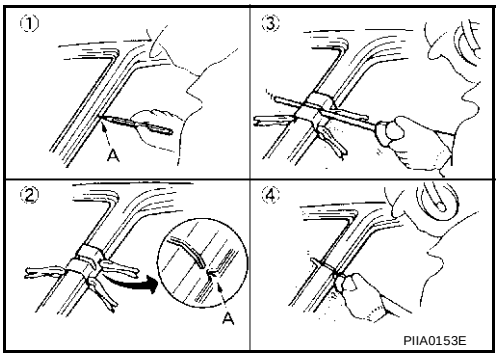

HOODLEDGE

Service Joint

Remove front side member center closing plate for easier installation.

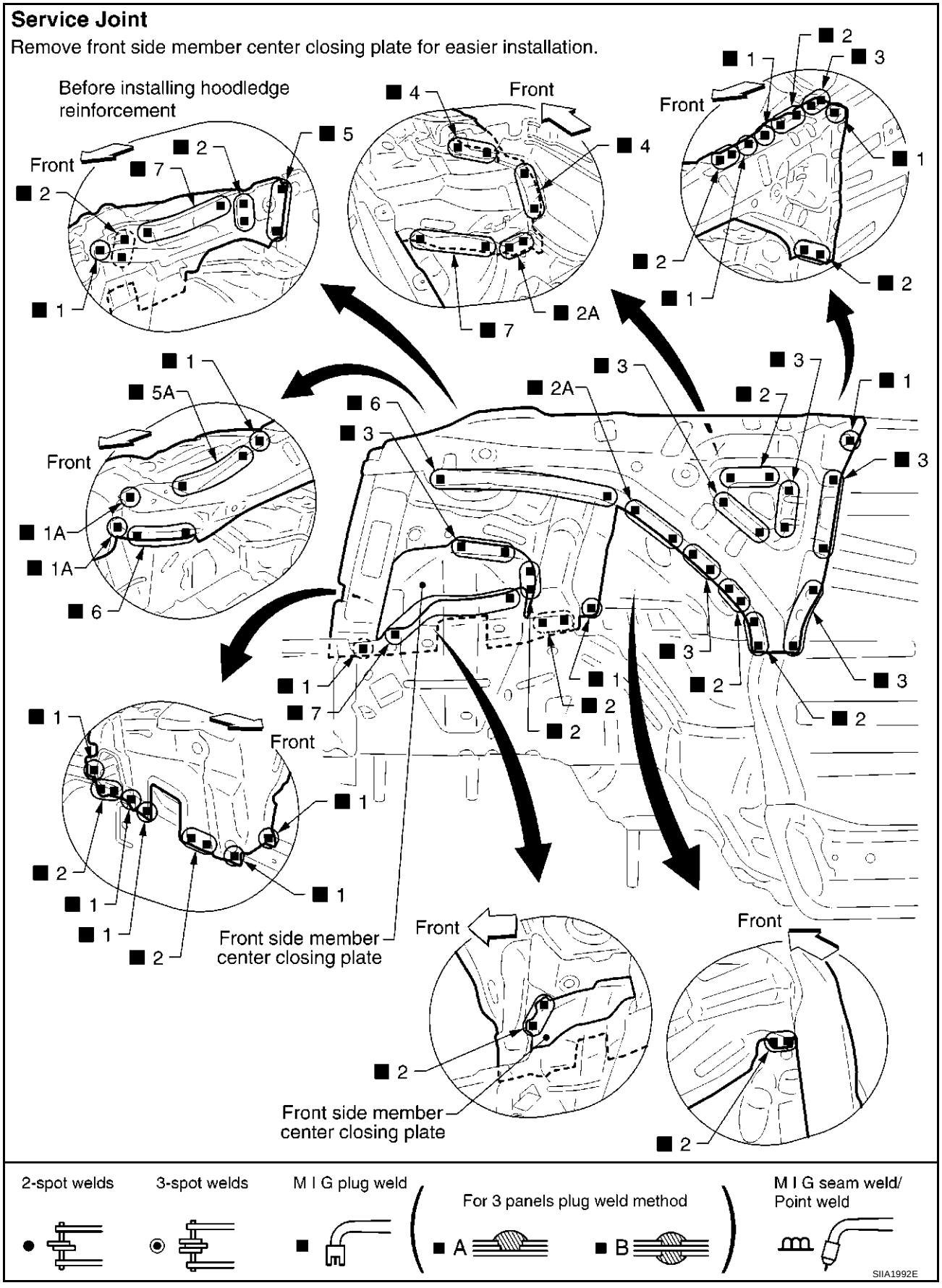

Change parts

- Front strut housing (LH)
- Upper front hoodledge (LH)
- Hoodledge reinforcement (LH)

FRONT SIDE MEMBER

- Work after hoodledge has been removed.

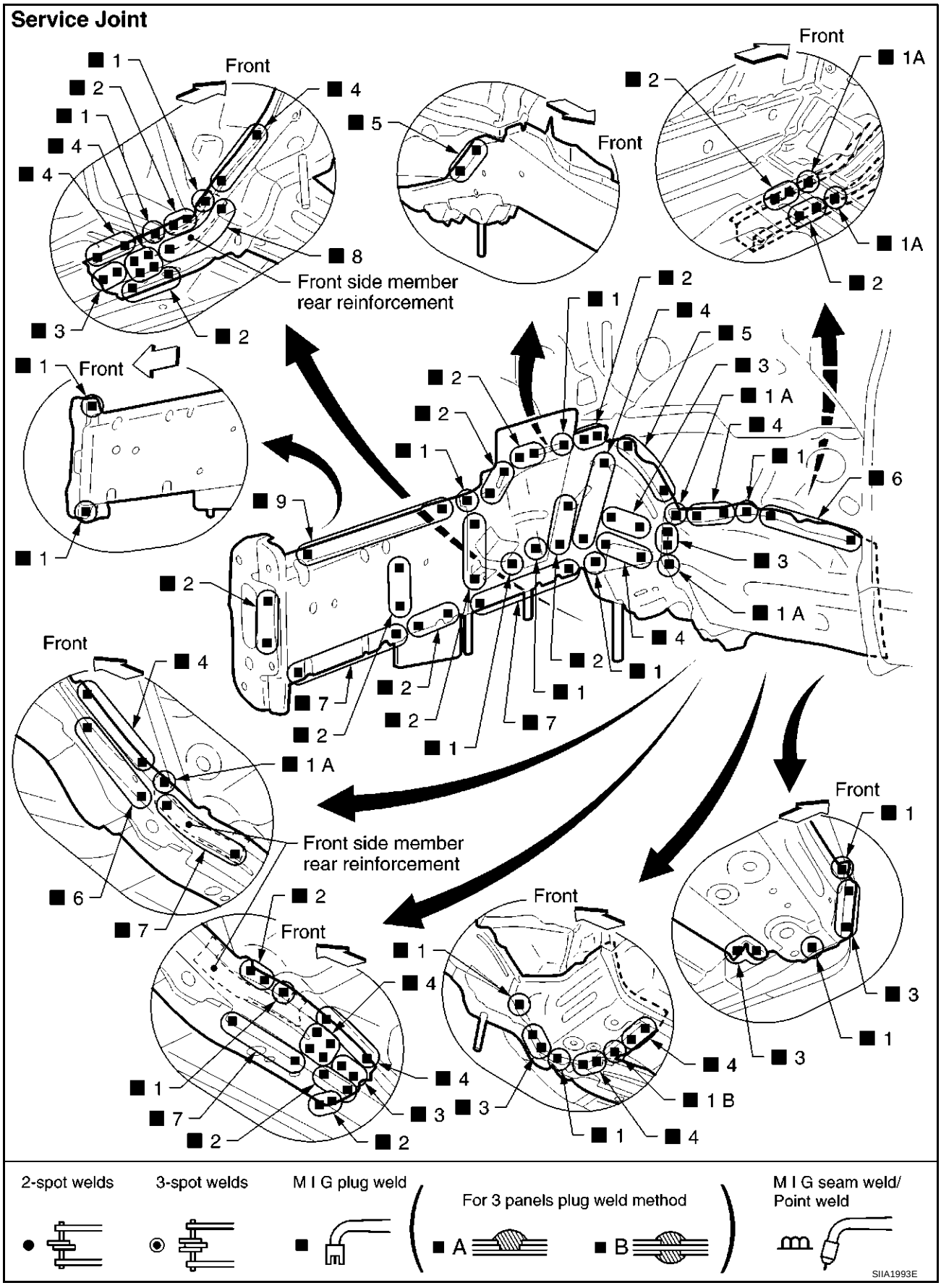

Change parts

- Front side member assembly (LH)
- Front side member outrigger assembly (LH)
- Front side member closing plate assembly (LH)
- Front side member rear reinforcement (LH)

FRONT SIDE MEMBER (PARTIAL REPLACEMENT)

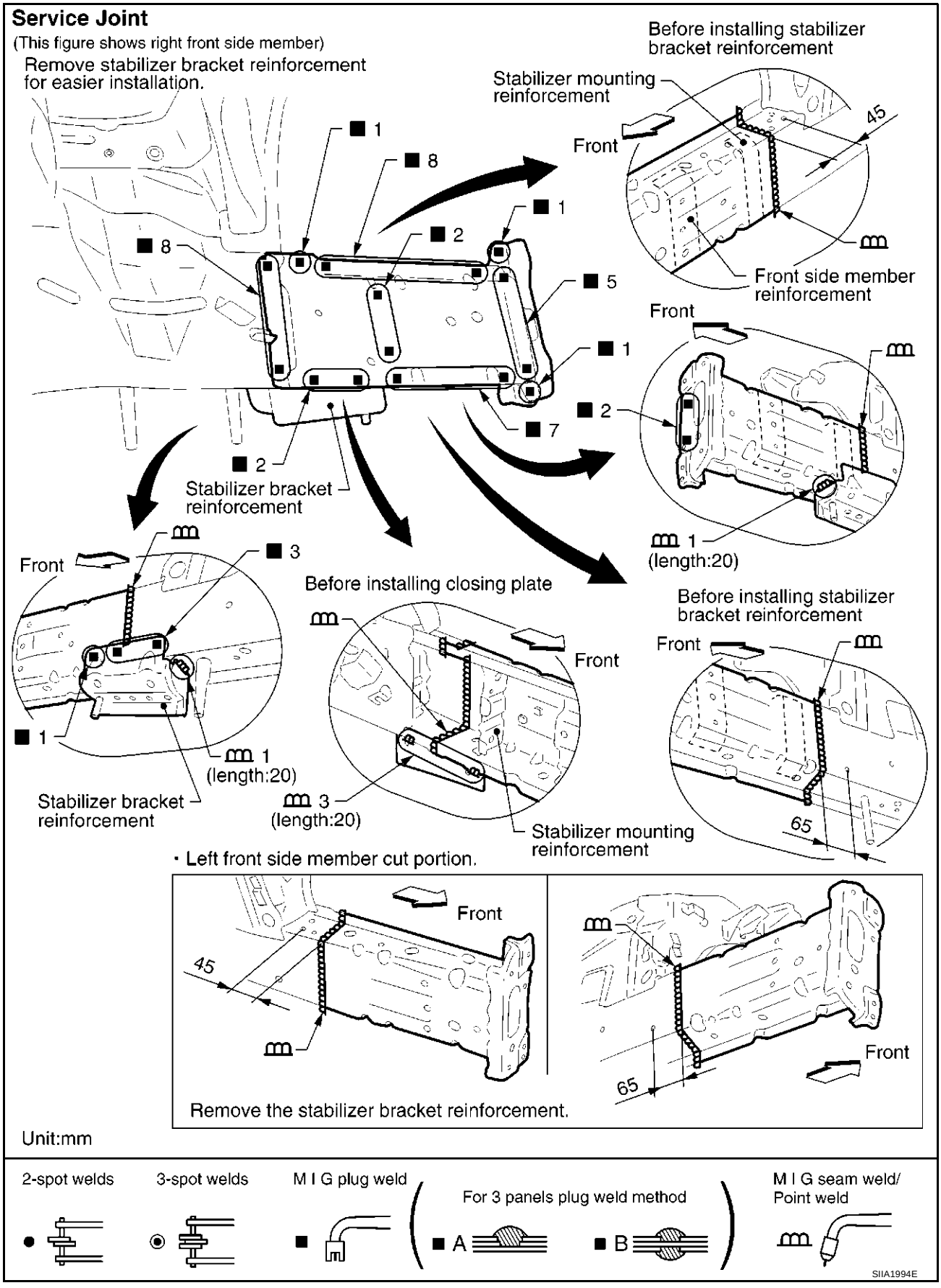

Change parts

- Front side member assembly (RH)
- Front side member front closing plate (RH)
- Outer front towing hook bracket (RH)

FRONT PILLAR

- Work after hoodledge reinforcement has been removed.

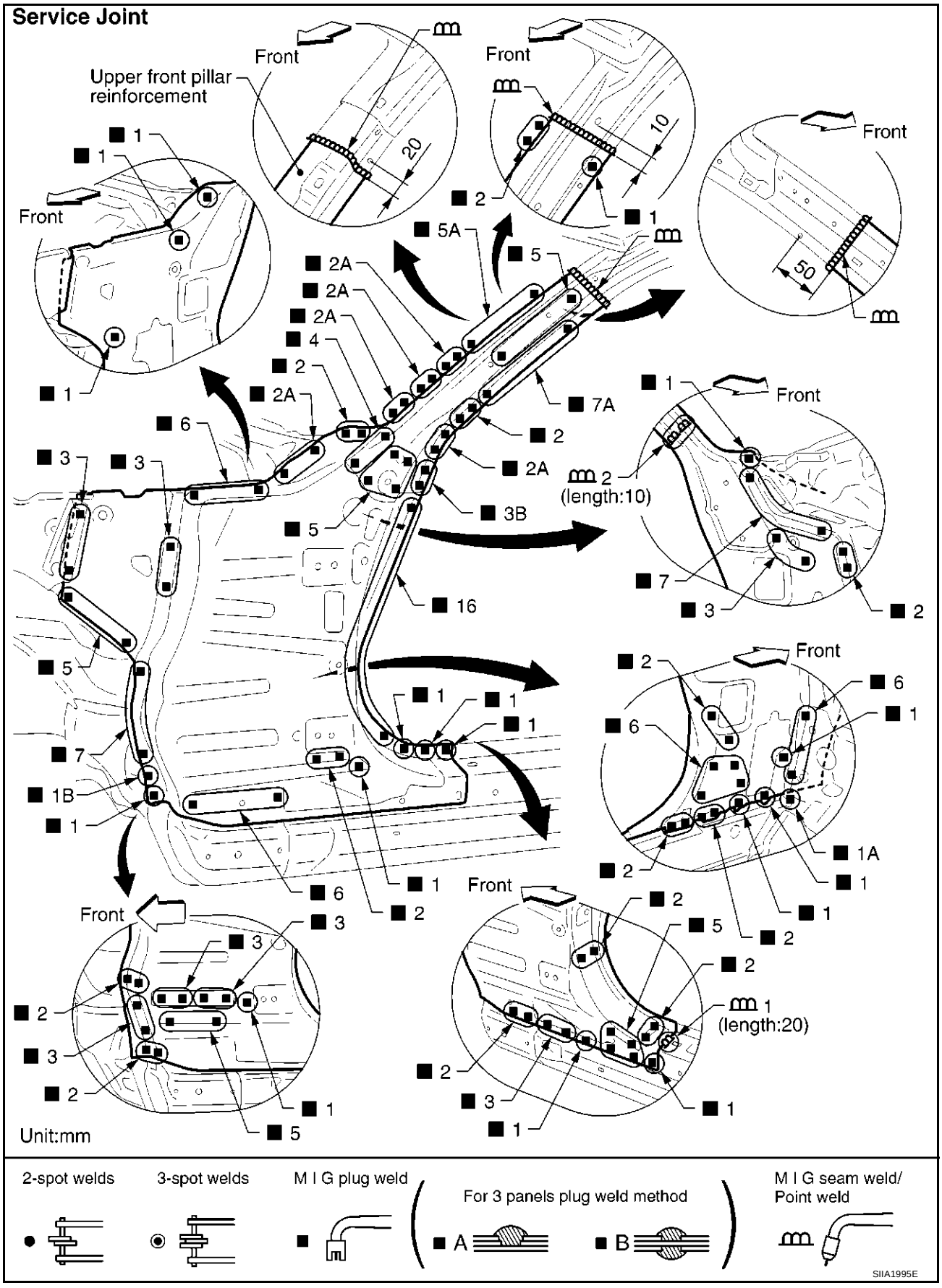

Change parts

- Front pillar reinforcement assembly (LH)
- Outer front pillar (LH)
- Inner side roof rail (LH)
- Upper rear hoodledge (LH)

OUTER SILL

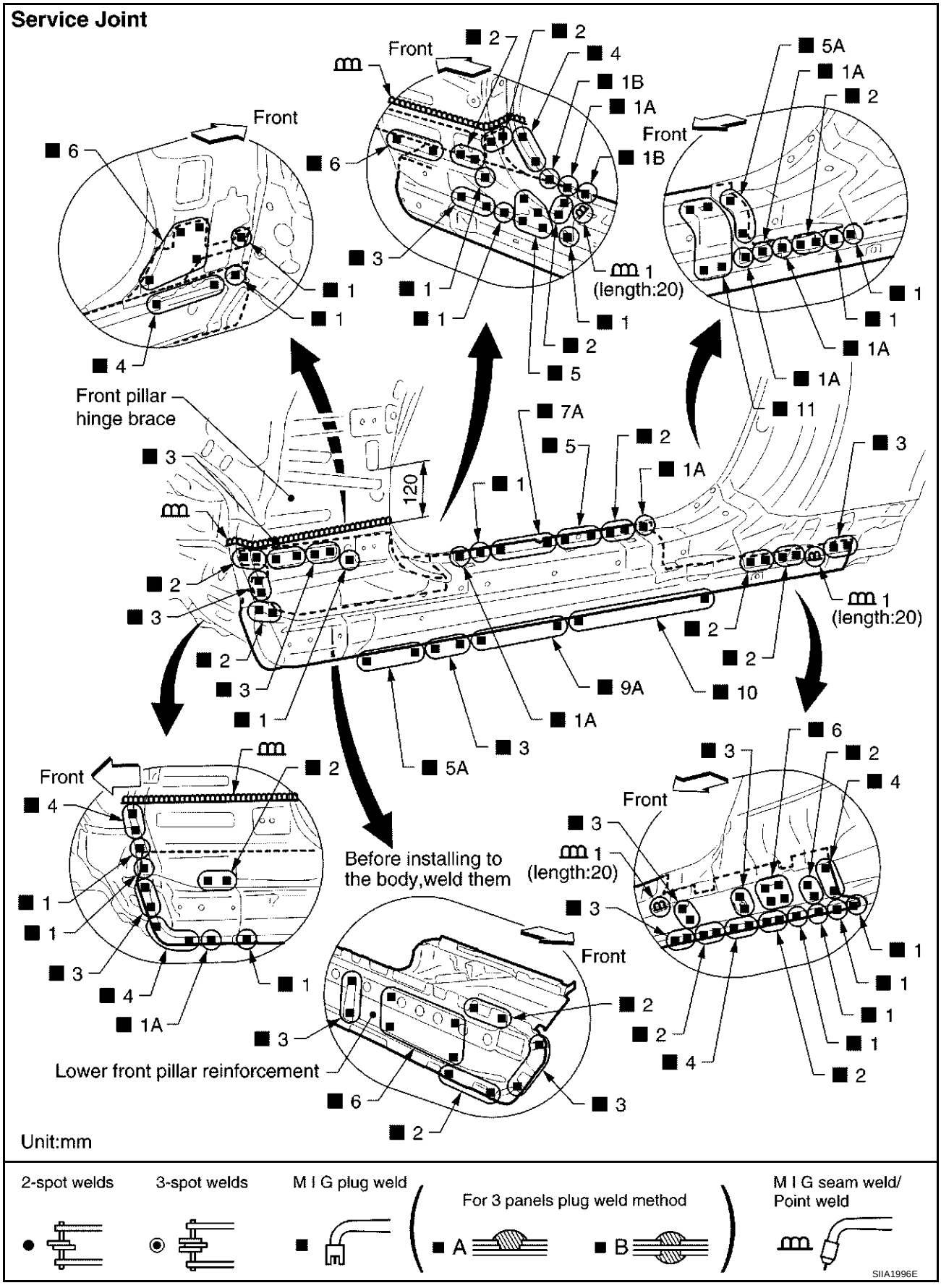

Change parts

- Outer sill reinforcement assembly (LH)
- Lower front pillar reinforcement (LH)

REAR FENDER

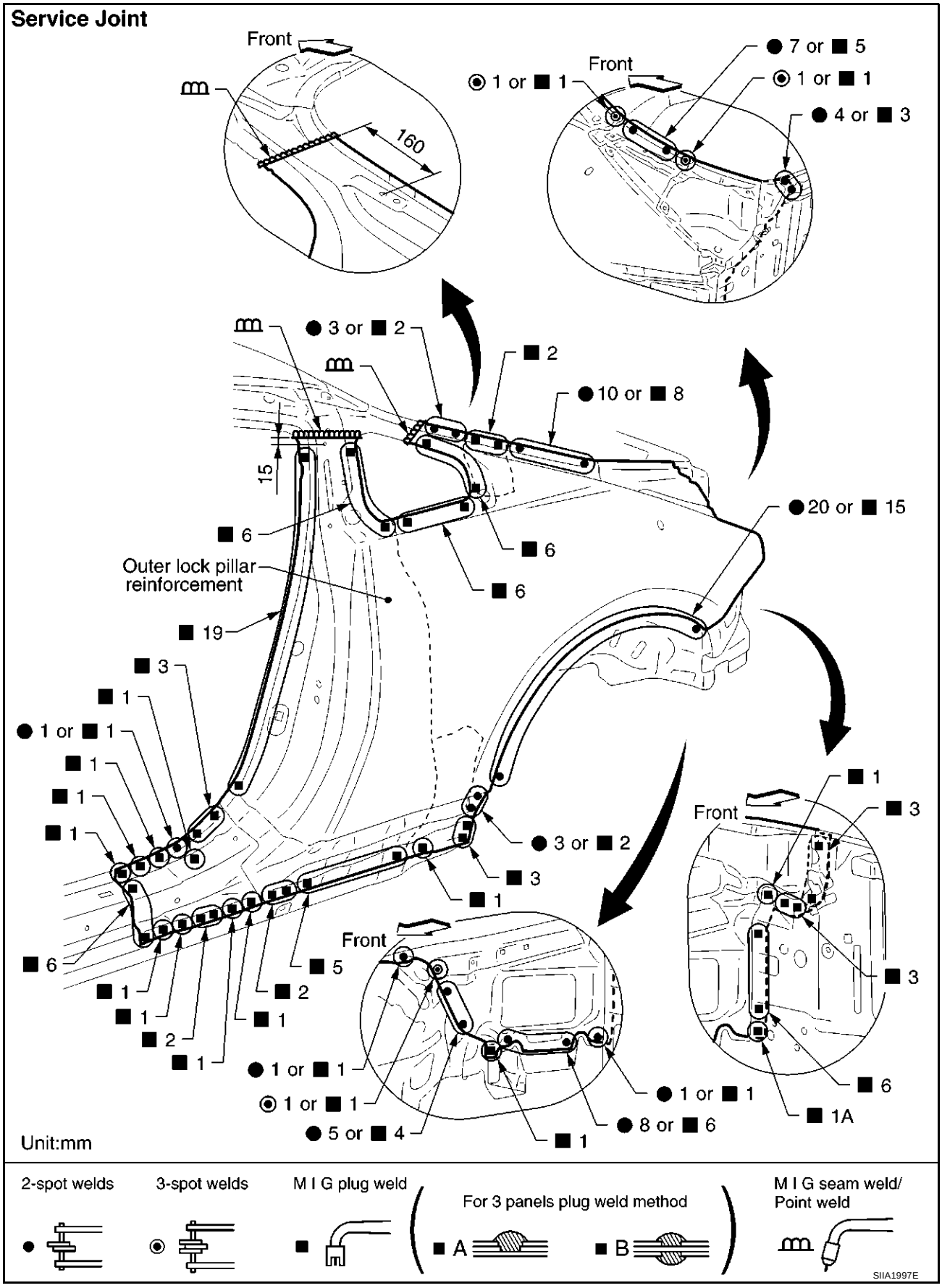

Change parts

- Rear fender assembly (LH)

REAR PANEL

Service Joint

★ indicates that there is an equivalent welding portion with the same dimensions on the opposite side.

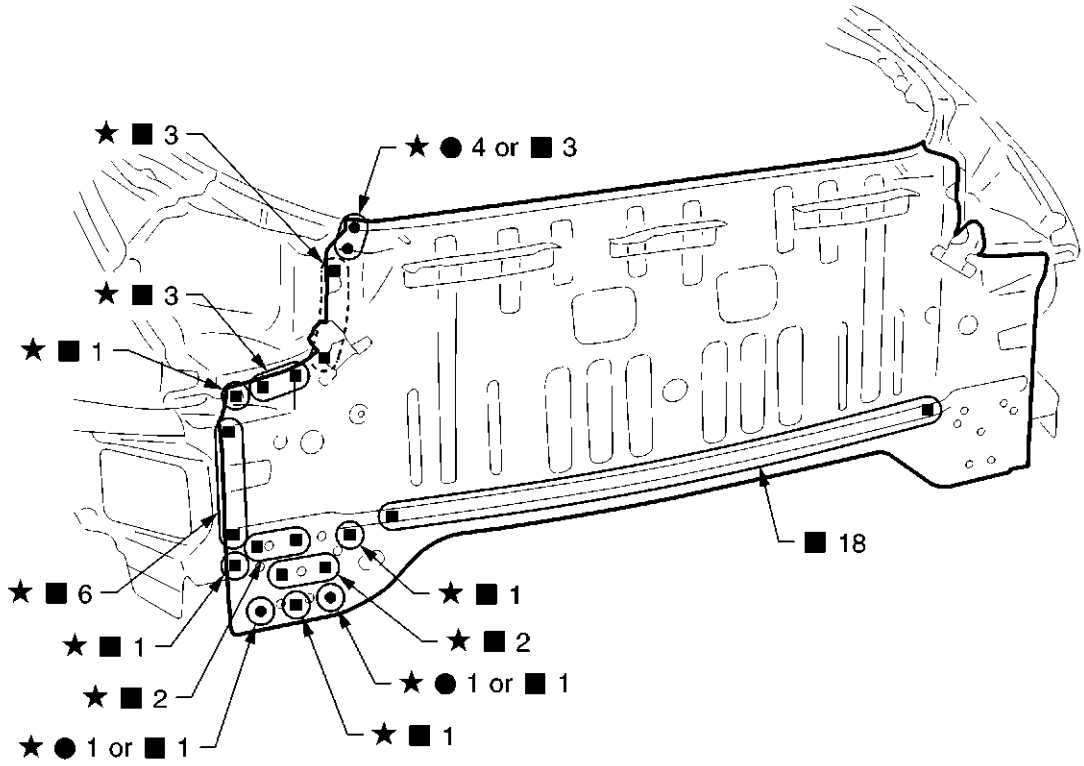

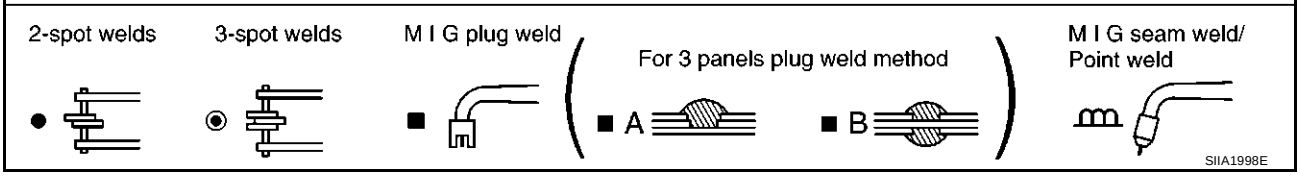

Change parts

- ● Rear panel assembly

REAR FLOOR REAR

- Work after rear panel assembly has been removed.

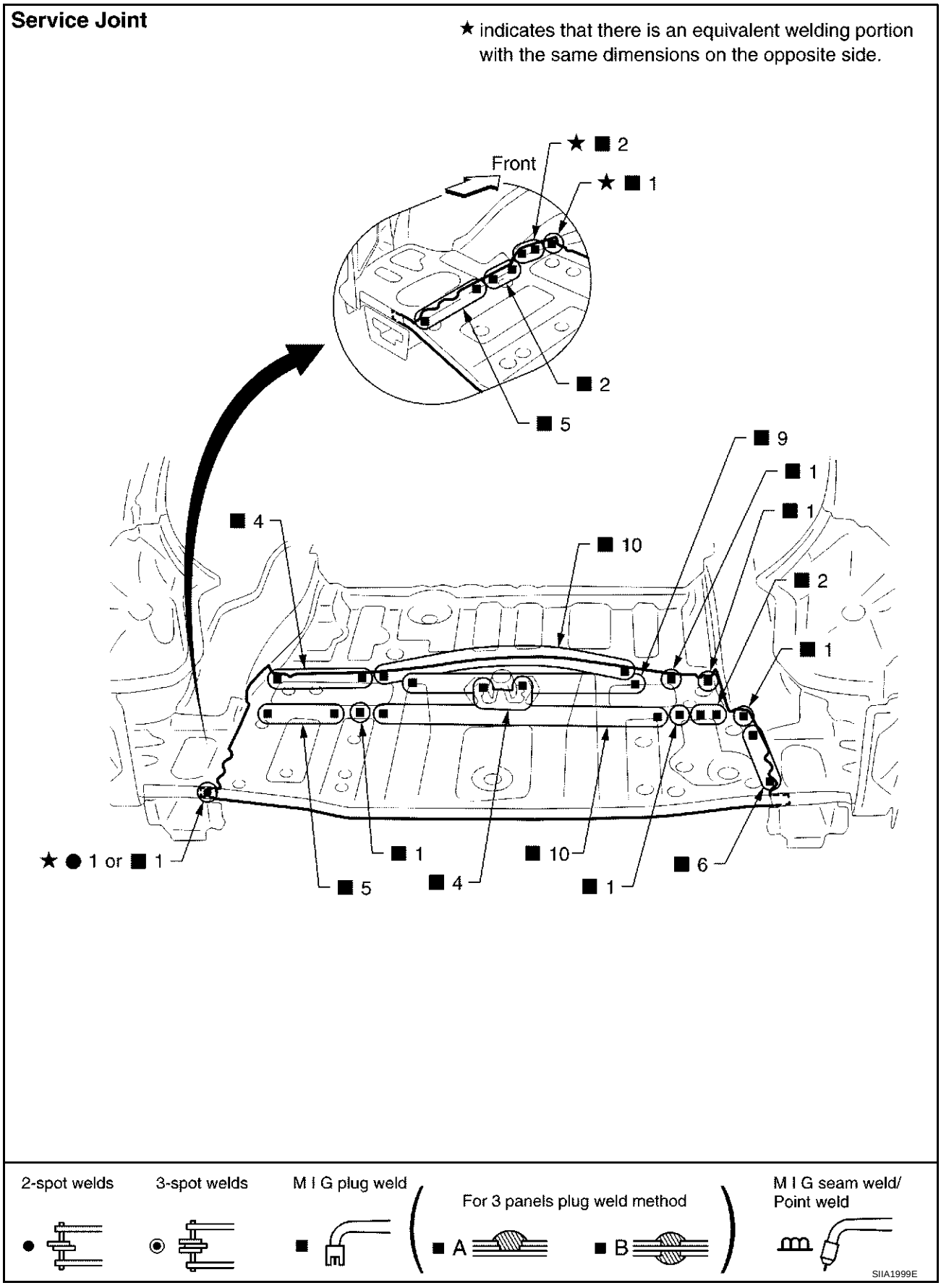

Change parts

- Rear floor rear
- Spare tire clamp bracket

REAR SIDE MEMBER EXTENSION

- Work after rear panel assembly has been removed.

Service Joint

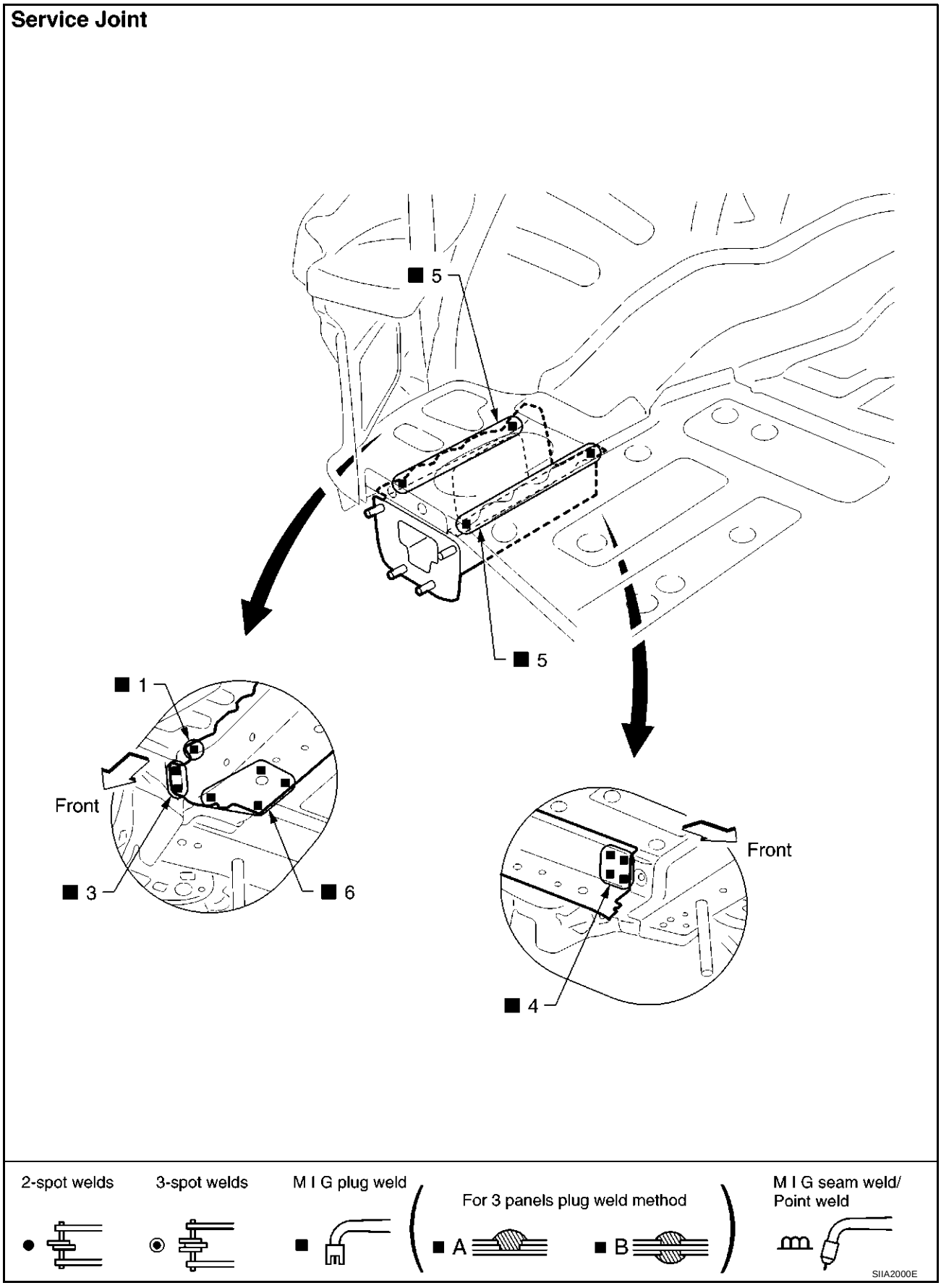

Change parts

- Rear side member extension (LH)