FEB 26 19[illegible]

TM-047

Operation · Maintenance · Service Manual

SHARK JAWS

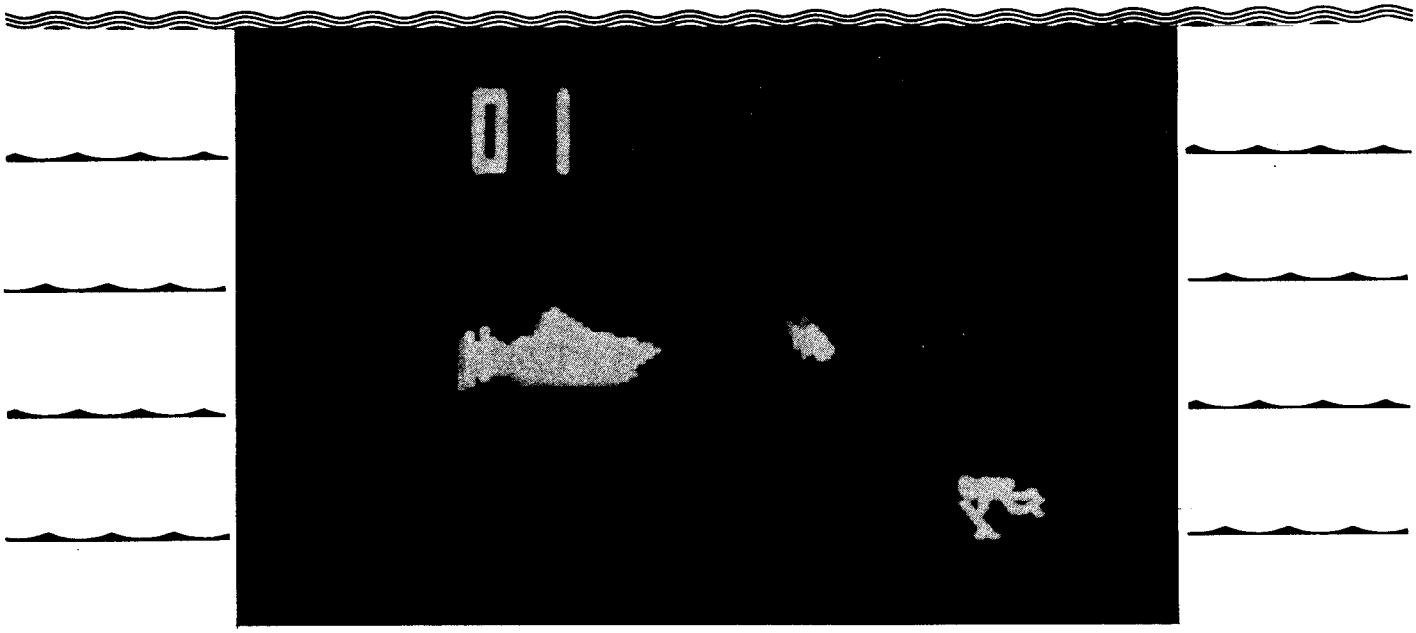

HORROR GAMES 14600 WINCHESTER BLVD, LOS GATOS, CA 95030 • (408) 374-2440 • TELEX 357-488

Table of Contents

Subject	*Page*
I. INTRODUCTION	
1.1 Physical Description of Game	1
1.2 Brief Description of Play	1
II. SPECIFICATIONS	
General	3
Electrical	3
Environmental	3
Owner/Operator Options for Structuring of Play	3
Accessories Available on Separate Order	3
III. THEORY OF OPERATION	
3.1 Functional Description of Game	5
3.2 General Information	5
3.2.1 Energizing the Game	5
3.2.2 TV Monitor	
3.2.3 Picture on TV Screen	5
3.3 Game Sequence	
3.3.1 Operating Modes	5
3.3.2 Attract Mode	5
3.3.3 Game Sequence in Play Mode	7
3.3.4 Owner/Operator Options	7
3.4 Detailed Technical Description of Operation	
3.4.1 General Comments	7
3.4.2 Coin and Credit	8
3.4.3 TV Synchronization and Blanking Information	8
3.4.4 Small Fish Motion	8
3.4.5 Diver Motion	9
3.4.6 Shark Motion	9
3.4.7 Catch Detection	10
3.4.8 ROM Addressing and Read-Out	10
3.4.9 Score Register and Display	10
3.4.10 Video Mix	11
3.4.11 Circuitry for Generating Sound	11
IV. INSTALLATION INSTRUCTIONS	
4.1 Unpacking Instructions	13
4.1.1 Examination for Shipping Damage	13
4.1.2 Mechanical Inspection	13
4.2 Energizing the Game	
4.2.1 Application of AC Power	13
4.2.2 Check on Operation of Interlock Switch	13
	13
4.3 Game Structuring	13
4.4 Functional Check of Game Operation	14
V. MAINTENANCE AND ADJUSTMENTS	
5.1 Routine Maintenance	17
5.1.1 Cleaning	17
5.1.2 Lubrication	17
5.2 Adjustments on TV Monitor	17
5.3 Adjustment of Speaker Volume	19
VI. TROUBLESHOOTING AND REPAIR	
6.1 General Procedure	21
6.1.1 Identifying the Trouble Area	21
6.1.2 Locating the Trouble Cause	21
6.1.3 Correcting the Trouble Cause	21
6.1.4 Verifying Correct Game Operation	22
6.2 Test Equipment	
6.2.1 Basic Test Equipment	22
6.2.2 Optional Test Equipment	23
6.3 Specific Troubleshooting Information	23
6.3.1 Antenna	23
6.3.1 TV Monitor	24
6.3.3 Coin Mechanism	24
VII. SCHEMATICS, DRAWINGS, AND PARTS LISTS	

I. Introduction

1.1 PHYSICAL DESCRIPTION OF GAME

"Shark Jaws" is a one-player video action game packaged in its own distinctively-styled cabinet. The upright cabinet rests directly on the floor and the player stands in front. (Drawing number A004150 in Section VII of this manual shows an external view of the game.) A 23-inch black-and-white TV monitor surrounded by attractive color graphics is mounted at the top front of the cabinet.

The player-operated controls are located just below the TV screen and consist of a joystick lever and a "START" push-button switch. Two identical coin mechanisms, located below the player-operated controls, accept quarters only and are connected effectively in series so that either one can initiate play. (The Shark Jaws game features an owner/operator-adjustable option that permits on-site game structuring for either one or two plays per quarter.) The cash box is located behind the access door to the coin mechanisms.

A speaker, located near the coin mechanisms, produces various echotype sounds during play.

1.2 BRIEF DESCRIPTION OF PLAY

In the Shark Jaws game three images appear on the TV screen: a little fish, a skin diver and a large shark. The little fish swims about randomly on the screen, often changing direction and sometimes even going off the edge of the screen. The diver moves his arms and legs continuously, but his location on the screen is completely under the control of the joystick operated by the player. By moving the joystick back and forth, the player causes the diver to move up and down; by moving it to the left or right, he causes the diver to move to the left or right. The shark swims back and forth, continually opening and closing its jaws, and tracks the diver's movements.

The object in the Shark Jaws game is for the player (the diver) to chase and get the little fish, before the shark catches him. Each time the diver gets a fish, the fish image disappears and one point is added to the player's score. (This score is continually displayed on the TV screen.) Then a new fish appears somewhere else on the screen. But anytime the shark catches the diver, the diver image first blurs and then disappears. After a few moments a new diver appears somewhere else on the screen and the shark starts tracking again. The loss of a few seconds of game play time before a new diver appears is the player's penalty for getting caught by the shark. The game ends when the internal game timer elapses. (The Shark Jaws game features an owner/operator-adjustable option that permits on-site adjustment of game time from 1 minute to 3½ minutes.)

During play the following sounds are produced by the speaker. A short, repetitive sonar "ping" provides a background sound heard throughout play. A twang-like sound is made whenever the diver gets the little fish. But there is a long screeching sound whenever the shark catches the diver.

II. Specifications

General

Cabinet Dimensions: Height 53-5/8 inches, width 25-1/4 inches, depth 23-1/2 inches
Cabinet Weight: 205 lbs.
TV Monitor: Motorola Model XM701, black and white, with 23-inch screen.
Coin Mechanisms: Two identical mechanisms connected effectively in series; accept quarters only.
Cash Box: Removable, located behind locked access door to coin mechanism assembly.
Power Cord: Approximately 6 ft. long, extending from rear of cabinet and having rounded three-prong plug for conventional wall outlets.

ELECTRICAL

Power Requirement: Uses conventional wall outlet providing 60-cycle AC (60-Hz, single-phase) at 110 volts; power consumption rated at 85 watts.
Fusing: All fusing located inside cabinet; TV monitor has two 1-amp fuses and remainder of game is protected by a single 1.5-amp fuse.
Power Interrupt Switch: This is a safety switch located inside the game cabinet. It interrupts AC power to the game whenever the rear panel service access door is unlocked and opened.

ENVIRONMENTAL

Operating and Storage Temperature Range: from 32°F to 120°F (ambient temperature)
Relative Humidity: from 0% to 80% *without* condensation

OWNER/OPERATOR OPTIONS FOR STRUCTURING OF PLAY

- Choice of 1 or 2 plays per coin
- Length of game time: Adjustable from approximately 1 minute to approximately 3-1/2 minutes

ACCESSORIES AVAILABLE ON SEPARATE ORDER

Video Probe: order from factory
Universal Test Fixture: order catalog number TF101 from factory.

III. Theory of Operation

3.1 FUNCTIONAL DESCRIPTION OF GAME

The block diagram in Figure 3-1 shows the major functional parts of the Shark Jaws game and how they are interconnected. The TV monitor is a self-contained unit housed in its own chassis inside the game cabinet. The game control circuitry combines synchronization, blanking and picture information and sends it on a single composite video signal to the TV monitor. Similarly, the game control circuitry combines all sound information and sends it on a single "audio" signal to the speaker, which is a separate unit and not part of the TV monitor.

The coin mechanisms send a signal to the game control circuitry whenever a player deposits a coin and it passes through one of the mechanisms and on into the cash box. In response to this coin signal, the game control circuitry causes the front panel "START" switch to light up. This indicates to the player that he has received game credit and that play will start as soon as he depresses the push button.

When the player depresses the button, the signal sent by the switch causes the game control circuitry to respond as follows: the light behind the "START" switch is extinguished, and game time begins.

The front panel joystick sends out four signals which indicate the position of the joystick lever. During play the game control circuitry responds to these signals by causing the diver image on the TV screen to move in the direction commanded by the joystick position. In the attract mode the game control circuitry ignores signals from the joystick.

3.2 GENERAL INFORMATION

The general information about the Shark Jaws game given in this section provides a background for understanding the Installation Instructions in Section IV of this manual, and the descriptions of game operation in paragraphs 3.3 and 3.4.

3.2.1 ENERGIZING THE GAME: The Shark Jaws game does not have an external "power on" switch. Instead the game is energized as soon as the power cord is plugged into an active AC wall outlet. This outlet must provide the AC power listed in the Specifications (Section II of this manual).

3.2.2 TV MONITOR: The TV monitor is a self-contained transistorized television monitor supplied by Motorola. Because the composite video signal supplied to the monitor by the game control circuitry differs in certain important respects from the signal derived from commercial TV broadcasts, the monitor does not produce any sound and the picture appearing on its screen is unlike that of a home TV set. The game's sound is produced by a speaker mounted separately from the monitor and driven directly by the game control circuitry. (The separate audio and composite video connections shown in Figure 3-1 point out this difference.)

3.2.3 PICTURE ON TV SCREEN: The game's composite video signal is constructed to produce only two video levels —medium white and white—instead of the more or less continuous shades of gray (between the extremes of black and white) seen on a home TV screen. Also the horizontal scan lines on the screen will be more noticeable than those on a home TV set. This is explained by the fact that the composite video signal contains synchronization information that causes the monitor to produce about half as many lines, without interlace, from top to bottom of the screen as are seen on a home TV. A commercial TV broadcast signal produces a picture having 525 lines, with interlace.

During play the player's score—the number of times the diver got the little fish—appears in the form of a two-digit number at the upper-center of the TV screen. The numerals are white video level against a medium white background. The score changes each time the player earns a point, and the final score remains showing after the game time elapses. The score is reset to zero at the start of each play sequence.

The little fish, the diver and the shark are each white video level; the background is medium white video level.

3.3 GAME SEQUENCE

3.3.1 OPERATING MODES: During use the Shark Jaws game can be described as operating in either of two modes, attract or play. Plugging the power cord into an active AC outlet energizes the game and it starts out in the attract mode. It remains in the attract mode until a player deposits a coin and the coin clears the coin mechanism, at which point a signal derived from the coin mechanisms causes the game to go into the play mode. The game remains in this mode until play ends, at which point the game reverts back to the attract mode.

3.3.2 ATTRACT MODE: During this mode the game's three images (the little fish, skin diver and shark) plus the score from the just-completed play mode appear on the TV screen. The little fish swims about randomly, often changing direction and sometimes even going off the edge of the screen. The diver moves his arms and legs continuously, but his location on the screen does not change. The joystick is inoperative in this mode; moving the joystick lever produces no response from the game.

If the little fish happens to swim into the diver, the little fish disappears, but the number displayed as the score does not change. After a few moments another little fish appears in some random location on the screen and swims about. The shark swims back and forth, continually open-

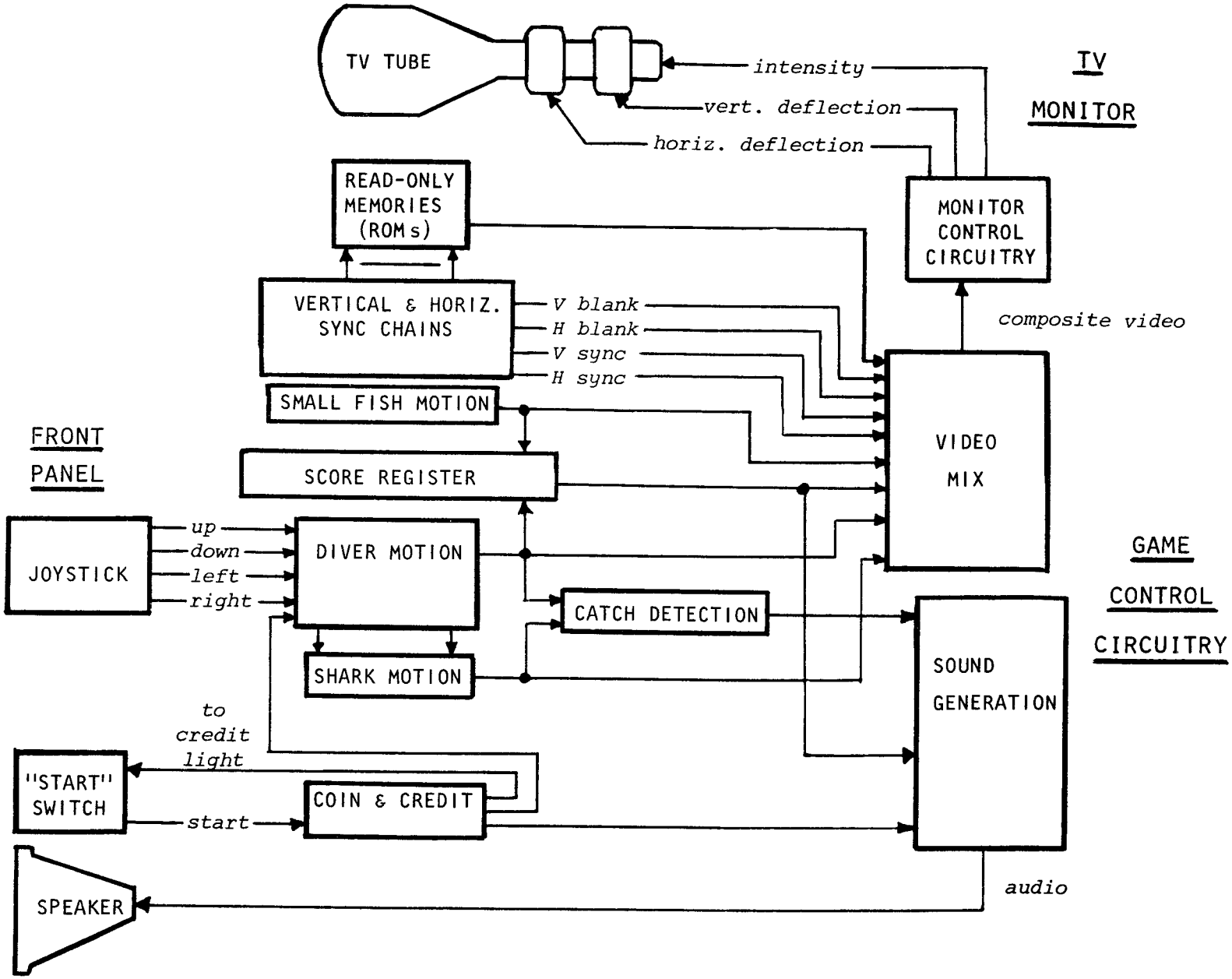

Figure 3-1 Functional Block Diagram of Game

; and closing its jaws and tracking closer and closer toward
: diver. Eventually the shark catches the diver. When this
ppens, the diver image briefly blurs and then disappears.
ter a few moments a new diver image appears in some
ıdom location on the screen and the shark begins to track
: new diver. This tracking and catch cycle continues as
ıg as the game remains in this mode. The shark ignores
: little fish. If the little fish happens to swim into the
ark, there is no interaction and both merely continue
swim.

The speaker does not produce any sound during this
ode.

3.3 GAME SEQUENCE IN PLAY MODE: A player
ıses the game to change over from the attract mode to the
ıy mode when he deposits a coin and it clears the coin
:chanism. A signal from the coin mechanism goes to the
ne control circuitry; the latter responds by bringing on
: credit light that backlights the "START" switch. To
ntinue the play sequence the player must now depress
: "START" push button. After he does this a signal from
: switch goes to the game control circuitry, which pro-
ces the following responses:

(a) The game timer starts to count down,
(b) The speaker starts to produce the game sounds,
(c) The score displayed on the TV screen during the previous attract mode disappears (because the score is reset to zero),
(d) The joystick is made operative so that the player can change the diver's location on the TV screen.

Now the player must try to get the little fish as many
ıes as he can—while at the same time not allowing him-
f to be caught by the shark—before the game time runs
t. A feature of the game control circuitry prevents the
ark from catching the diver anytime during the first four
:onds of play. This feature gives the player a chance to
ıve away from the shark, should the player have happened
depress the "START" button when the shark had been
the verge of catching the diver. Another feature of the
ne causes the horizontal component of the shark's
cking motion to speed up after the first 25 seconds of
ne time have elapsed. This introduces additional chal-
ge for the player.

Each time the player gets the little fish, it disappears
d the player's score is increased by one point. Soon after
s, a new little fish appears elsewhere on the screen and
: player must try to get the new fish. Each time the diver
:aught by the shark, the diver image blurs and then dis-
ɔears. As a penalty for being caught the player loses a few
ɔments of game time before a new diver appears elsewhere
the screen. Both the little fish and the shark can swim
: either the left or right edge of the TV screen. But move-
:nt of the diver image is limited to the screen only; the
game control circuitry will not recognize any command from the joystick that would force the diver past any of the four edges of the screen.

During the play mode the speaker produces sounds as follows. A short, repetitive sonar "ping" begins as soon as the "START" button is depressed, and continues throughout play until the game time elapses. A brief twang-like sound is added each time the diver gets the little fish (that is, each time the player scores a point). And a long "screeching" sound is added each time the shark catches the diver.

If the game is structured for 1 play/coin, the play mode ends when the game time elapses; the game then reverts back to attract mode. But the player's final score continues to appear on the TV screen until the start of the next succeeding play mode.

If the game is structured for 2 plays/coin, the play sequence also ends when the game time elapses. However, under this structuring the game control circuitry next brings on the credit light and the player can initiate a second play sequence merely by depressing the "START" button. The final score from the play just completed continues to be displayed until the player does depress the button, however.

3.3.4 OWNER/OPERATOR OPTIONS: The Shark Jaws game features two options which the owner/operator can adjust at the game site in order to structure the game play, that is, to change some of the rules or to alter the timing of the game sequence. The game time option consists of a potentiometer (Trimpot) that can be manually adjusted to either increase or decrease the game time (within the maximum and minimum limits listed in the Specifications in Section II of this manual). The 1 play/coin—2 plays/coin option consists of a 2-position switch. One position of the switch structures the game for one play sequence per coin, and the other position for two play sequences per coin.

Section IV of this manual gives instructions for making these adjustments.

3.4 DETAILED TECHNICAL DESCRIPTION OF OPERATION

3.4.1 GENERAL COMMENTS: This section 3.4 gives a component-level technical description of the game's control circuitry. Drawing number 003806 (in two sheets) is a schematic diagram of the circuitry located on the printed circuit board; drawing number A003806 is an assembly diagram showing the location of the components mounted on the PCB; and drawing number 004145 is a schematic of the harness wiring. These drawings are included in Section VII of this manual, along with a schematic diagram of the TV monitor's circuitry.

On the PCB and on its schematic each integrated circuit device location is identified by a column letter designation (A thru N) and by a row number designation (1 thru 10).

On the PCB schematic the symbol *p* (appearing at various inputs to logic gates and other integrated circuits) indicates a connection to +5 volts through a pull-up resistor.

3.4.2 COIN AND CREDIT (SHEET 1, ZONES BB THROUGH 5): As shown on drawing number 004145, certain contacts on the two coin switches have been wired together so that a coin passing through either coin mechanism will cause a signal to be sent to the printed circuit board via edge connector pin 13. This signal is de-bounced by an inverter configuration in location 8B, and the output signal at 8B pin 4 is applied to various input pins of flip-flop 8C and to pin 11 of gate 7E. Under action of the 128V timing signal from the vertical sync chain, a "coin pulse" is then produced at 8C pin 6. This "coin pulse" signal is applied via diode CR2 to the Q latch configuration formed by transistors Q5 and Q4, and to the credit shift register at pins 1 and 13 of flip-flop 8D. The CREDIT signal at 8D pin 8 going high turns on the credit light LED, which provides backlighting for the "START" switch via edge connector pin T. This backlighting indicates to the player that he must now depress the "START" button in order to continue the play sequence.

Whenever a player depresses the "START" button, a signal is sent to the PCB edge connector pin S. After debouncing by an inverter configuration in location 8B, the output at 8B pin 10 is gated with ATTRACT and the resulting signal is applied at pin 2 of the start flip-flop in location 8E. Provided that the gate 7E pin 13 output is at low, the 256V timing signal from the vertical sync chain will clock the start information into the start flip-flop. The gating at 7B pin 6 and at 7E pin 13 insures that a player depressing the "START" switch can cause generation of a START signal at 8E pin 6 only when there is game credit. The $\overline{\text{START}}$ signal applied at pin 6 of the type-556 device in location N9 causes the long time duration $\overline{\text{END GAME}}$ signal to be produced at N9 pin 5. Potentiometer R39 provides the length-of-game-time owner/operator option because its setting determines the time duration of the $\overline{\text{END GAME}}$ signal that clocks into the attract flip-flop through inverter 8F pin 10. The ATTRACT signal at 8E pin 9 going to low puts the game in the play mode.

After game time elapses, the $\overline{\text{END GAME}}$ signal goes to low, causing the ATTRACT signal to go to high. The ATTRACT signal changing state causes the credit shift register to shift once. If switch S1, the 1 play/coin-2 plays/coin owner/operator option, is in the 1 play/coin position this shift will cancel the game credit. But if S1 is in the 2 plays/coin position, game credit remains and the player can initiate a second game sequence by depressing the backlighted "START" switch. However, after the second game sequence ends, the ATTRACT signal changing state causes the credit shift register to shift a second time and game credit is canceled.

3.4.3 TV SYNCHRONIZATION AND BLANKING INFORMATION (SHEET 1, ZONES CC, DD 5 THROUGH 8): The output of a crystal-controlled oscillator is divided down by the horizontal sync chain formed by flip-flop 4E, counters 5D and 5C, and flip-flop 4D. Through use of additional gating and flip-flop 5A, the H RESET signal at 5A pin 8 and H SYNC signal at 5A pin 6 are produced. These signals serve as the basis for the horizontal synchronization information sent on the composite video signal to the TV monitor.

A vertical sync chain, formed by counters 5F and 5E, then divides down the H RESET signal. Through use of additional gating at 4F pin 10, flip-flops 4D and 4E, and latch 4A, the signal V SYNC is produced at 4A pin 3. This signal serves as the basis for the vertical synchronization information sent on the composite video signal to the TV monitor. Signals from the counters in the horizontal sync chain are gated at 7D pin 11 and 7B pin 12, and after this, the H BLANK signal is produced at the pin 6 output of flip-flop 7C. In a similar manner, the V BLANK signal is produced at the pin 8 output of flip-flop 7C.

Signals from the horizontal and vertical sync chains are also used for timing in various parts of the image generation circuitry for the little fish, diver, shark and score video signals.

3.4.4 SMALL FISH MOTION (SHEET 2, ZONES HH 5 THROUGH 8): The small fish's motion seen on the TV screen can be described in terms of direction, horizontal and vertical components. While the little fish image is being written on the screen, the SMALL FISH DIRECTION signal produced at pin 2 of inverter 8J is held at a steady state; but at other times this signal is free to change state. The $\overline{\text{CLOCK}}$ signal applied to pin 3 of the quad latch in location 8M is sampled under control of the 1/2 SEC signal to provide randomization of direction via the connection from 8M pin 15 to gate 7L pin 1.

Flip-flop 6N and the type-9316 devices in locations 1L and 1M form the vertical motion counter for the little fish. This counter is driven by the H SYNC signal that comes from the horizontal sync chain and that changes state once per horizontal scan line on the TV screen. The CV WINDOW signal is produced at pin 8 of gate 3M by decoding certain states of the counter.

The type-9316 devices in locations 2N and 1N from the horizontal motion counter for the little fish. This counter is driven by the $\overline{\text{1H}}$ signal that comes from the horizontal

sync chain and that is obtained by dividing the CLOCK signal by 4. The CH WINDOW signal is produced at the terminal count of the last stage of the counter, 1N pin 15.

The connections to the preset inputs at pins 3 and 4 of the type-9316 devices in locations 1L and 2N are specially designed. To be specific, the randomization logic shown in zone HH 8 on the schematic can lengthen or shorten the full counting sequence of both the horizontal and vertical motion counters. Changes at these counter preset inputs produce the little fish's random movement on the TV screen. The reason is that the combined timing of the CV WINDON and CH WINDOW signals determines where the little fish image will appear on the TV screen. The little fish image is derived from data read out from ROM $1D_A$.

3.4.5 DIVER MOTION (SHEET 2, ZONES GG, FF 5 THROUGH 8): During the play mode, movement of the joystick lever will cause the diver image to change its location on the TV screen, but during the attract mode the joystick has no effect. Four miniature switches, designated "UP," "DOWN," "RIGHT," and "LEFT," are mounted on the joystick assembly. Their "common" contacts are all connected to ground, but their normally closed contacts are brought to separate edge connector points (pin 7 for the "UP" switch, pin H for the "DOWN" switch, etc.). On the printed circuit board the inputs from the "UP" and "DOWN" switches are gated with timing signals from the vertical sync chain to produce the STOP V signal at pin 8 of flip-flop 7F. Similarly, the "RIGHT" and "LEFT" switch inputs are gated with signals from the horizontal sync chain to produce the STOP H signal at 7F pin 6. The ATTRACT signal applied at 7F pins 2 and 12 insures that STOP V and STOP H will be high during the attract mode.

The type-9316 devices in locations 5H and 5J and flip-flop 6K form the vertical motion counter for the diver. This counter is driven by the H SYNC signal that comes from the horizontal sync chain and that changes state once per horizontal scan line on the TV screen. The AV WINDOW signal is produced at pin 7 of the device in location 5L by decoding certain states of the counter.

The type-9316 devices in locations 4J and 4K form the horizontal motion counter for the diver. This counter is driven by the 1H signal that comes from the horizontal sync chain and that is obtained by dividing the CLOCK signal by 4. The AH WINDOW signal is produced at the terminal count of the last stage of the counter (4K pin 15).

During the play mode, the length of the full counting sequence for both the vertical and horizontal motion counters can be altered by signals derived from the joystick. When the player moves the joystick lever to cause leftward movement of the diver image, he causes the horizontal motion counter to shorten each full counting sequence by one count, via the preset line at 4J pin 4. Similarly, for rightward movement the counter lengthens each full counting sequence by one count, via the preset line at 4J pin 3. The combined timing of the AV WINDOW and the AH WINDOW signals determines where the diver image, derived from data read out from ROM $1D_B$, will appear on the TV screen.

3.4.6 SHARK MOTION (SHEET 2, ZONES EE, FF 5 THROUGH 8): The type-9316 counters in locations 2K and 2J and flip-flop 3N form the vertical motion counter for the shark. The counter is driven by the H SYNC signal that comes from the horizontal sync chain and that changes state once per horizontal scan line on the TV screen. The LV WINDOW signal is produced at gate 3M pin 11 by decoding certain states of the counter. The length of the counter's full counting sequence can be altered by the A_L and B_L signals applied to the preset inputs, pins 3 and 4, of the type-9316 device in location 2K.

The type-9316 counters in locations 4N and 4M and flip-flop 3N form the horizontal motion counter for the shark. The counter is driven by the $\overline{\text{CLOCK}}$ signal derived from the 14-MHz crystal-controlled oscillator. The LH WINDOW signal is produced at pin 2 of flip-flop 3N. The length of the counter's full counting sequence can be altered by the signals applied to the preset inputs, pins 3 and 4, of the type-9316 device in location 4N.

The signal applied at 4N pin 3 is developed in the timed speed-up configuration shown in zone EE 7 and 8 on the schematic. When a play sequence begins, the $\overline{\text{START}}$ signal applied at pin 2 of the type-555 timer device in location 8N causes the timer to begin its count down. After 25 seconds have elapsed the countdown is completed and the shark's horizontal motion is speeded up for the remainder of the game time.

The signal applied at 4N pin 4 is the product of gating the above signal, from the timed speed-up configuration, with the signal produced at 3L pin 15. This latter signal controls the direction of the shark's motion. The A_L and B_L signals, applied to the pin 3 and 4 preset inputs of the type-9316 counter in location 2K, come from the shark tracking configuration formed by the type-7485 devices in locations 3J, 3K and 3L, and the type-9314 device in location 3L. In this configuration the type-7485 device in location 4L compares the various MH signals from the diver horizontal motion counter with the various LH signals from the shark horizontal motion counter. The output signal produced at 4L pin 7 is the result of this comparison and is used to cause the shark to move in closer to the diver.

Similarly, the type-7485 devices in locations 3J and 3K compare the various MV signals from the diver vertical motion counter with the various BV and LV signals from the

shark motion counter. The signal at 3J pin 6 is produced when the vertical position of the diver matches the vertical position of the shark. The signal produced at 3J pin 7 indicates whether the shark has to move up or down in order to track the diver.

The combined timing of the LV WINDOW and LH WINDOW signals determines where the shark image will appear on the TV screen.

3.4.7 CATCH DETECTION (SHEET 2, ZONE FF 4): The counter configuration consisting of the type-9310 counter in location 7J, flip-flop 6H, inverter 8J and gate 6J serves as a catch detection circuit for recognizing when the shark has caught the diver. The 1/2 SEC signal applied at 7J pin 2 and at 6H pin 3 provides clocking to drive the counter configuration.

When the shark catches the diver on the TV screen, there is a coincidence of the diver and shark video signals that are gated at 6J pins 9 and 11. The CATCH signal then produced at 8L pin 10 is in synchronization with the 1/2 SEC signal. This CATCH signal is applied to the Sound Generation circuitry at 10C pin 4 (see sheet 1, zone AA 6), to produce the screeching sound, and at pin 12 of flip-flop 6H to produce the RESET signal. The RESET signal is applied to pin 6 of gate 3C (zone HH2) and causes the diver image to disappear from the screen just after the shark catches the diver.

3.4.8. ROM ADDRESSING AND READ-OUT (SHEET 2, ZONES FF, GG, HH 2 THROUGH 5): The game has two read-only memory devices (ROMs). The ROM in location $1D_B$ has been programmed with two diver figures that are alternately read out in such a way that on the TV screen the diver's arms and legs seem to be moving continuously. The ROM in location $1D_A$ has been programmed with three figures: one little fish figure and two shark figures. The shark figures are read out alternately in such a way that the shark will open and close his jaws from time to time, but not continuously. The timing of the $\overline{\text{DIVER ENABLE}}$ signal, applied at pins 13 and 14 of ROM $1D_B$, and the $\overline{\text{SHARK ENABLE}}$, applied at pins 13 and 14 of ROM $1D_A$, is mutually exclusive; both ROMs cannot be read out at the same time.

During those horizontal scans on the TV screen when figures are read out from the ROMs, picture information is transferred through the IC devices in locations 1A, 1B and 1C to produce the 8 parallel lines of data labeled on the schematic as 2^0 (at 1B pin 9) thru 2^7 (at 1A pin 4). These 8 parallel lines of data are applied to the parallel inputs of three parallel-in, serial-out shift registers:

- The type-74165 devices in locations 2A, 2B, and 2C form the register of the diver image;
- The devices in 2H, 2F, and 2E form the register for the shark image; and
- The device in 2D forms the register for the little fish image.

The signals applied at pin 1 of each type-74165 device control the time when the data are loaded into each register. Each register is made to load data at a different time, but all the loading will occur only during horizontal blanking when no picture information is being sent to the TV monitor. This is the case because all signals applied at pin 1 of the type-74165 devices in the registers are derived from the $\overline{\text{H RESET}}$ signal applied at 3B pin 9 and at 3F pin 13.

The rate at which data are read out serially from the registers is under control of the $\overline{\text{CLOCK}}$ signal applied at pin 2 of each type-74165 device. This $\overline{\text{CLOCK}}$ signal comes from the 14-MHz crystal-controlled oscillator. The control signals determining when data from a register are to be read out are applied at pin 15 of each type-74165 device. These control signals are different for each of the three registers. For the diver image the control signals are AV WINDOW and AH WINDOW; for the shark they are LV WINDOW and LH WINDOW; and for the little fish they are CV WINDOW and CH WINDOW. These three pairs of AV and AH signals are produced by the respective vertical and horizontal motion counters. There is one pair of counters for the diver image, one pair for the shark, and one pair for the little fish (see paragraphs 3.4.5, 3.4.6 and 3.4.4, respectively).

3.4.9 SCORE REGISTER AND DISPLAY (SHEET 1, ZONES BB, CC 5 THROUGH 7): The player scores one point each time the diver gets the little fish. This event is detected in gate 8K by gating the diver and little fish video signals to produce an output signal at pin 11 that exercises the type-556 device in location 9C. The signal then produced at 9C pin 5 is sent to the sound-generating circuitry (zone AA 6) at 10C pin 10 to produce the twang-like sound. This signal is also gated with the $\overline{\text{ATTRACT}}$ signal to produce an output at 7D pin 3 that drives the score register formed by the type-7490 counters in locations 6F and 6E. This gating keeps the counter from changing state during the attract mode.

Under control of the $\overline{256H}$ signal applied at pin 1, the type-9322 device in location 6D decodes the counter states into a set of four BCD outputs. These outputs are further decoded by the type-7448 device in location 6C to produce the 7-segment data needed for developing the numerals that will appear on the TV screen.

The SCORE WINDOW signal, produced by the gating configuration shown in zone CC 6 and 7 on the schematic, is applied at 6C pin 4 in order to blank the 7-segment data except in those portions of the line scans that lie in the score region on the TV screen.

The type-9312 devices in locations 6A and 6B synchronize the 7-segment data with timing signals from the horizontal and vertical sync chains in order to construct the score portion of the video in a serial form. The result of this construction is the $\overline{\text{SCORE}}$ signal produced at pin 15 of flip-flop 1E.

3.4.10 VIDEO MIX (SHEET 1, ZONE CC 4): The junction of resistors R3 thru R7 forms the video summing point. The composite video signal is coupled through capacitor C15 and sent out to the TV monitor via edge connector pin 16. The synchronization information is applied through resistor R45 to the base of transistor Q6. When conducting, Q6 pulls the video summing point down towards ground potential. The signals applied to resistors R4 thru R7 come from the outputs of inverter or logic gates, and these signals produce the various images seen on the TV screen: little fish, diver, shark, and the numerals in the player's score display.

3.4.11 CIRCUITRY FOR GENERATING SOUND (SHEET 1, ZONES AA 4 THROUGH 8): During the play mode three separate sounds are generated: a sonar "ping," a twang-like and a screeching sound. The signals which cause these sounds are combined at the summing point formed by resistors R12, R13 and R43. The resulting signal is then applied, via edge connector pin 11, to the reverb unit mounted on the electronics tray.

(a) Sonar "ping" sound. A type-556 function generator device in location 9C produces a very slow clocking signal at pin 9. After an inversion stage, this becomes the $\overline{1/2\ \text{SEC}}$ signal that drives gate 7B and certain other logic inputs. Counter 7A divides down the clock signal, and at its output pin 11 produces a signal that resets latch 8A at pin 12. This resetting occurs four seconds after the START signal applied at 8A pin 8 had set the latch. The latch's output, the NO CATCH signal, is used to prevent the shark from catching the diver during the first four seconds of game play.

The pin 9 and pin 12 outputs from counter 7A are gated with the 1/2 SEC signal to produce a very low repetition rate pulse that is applied to the base of transistor Q1. Each time Q1 goes into conduction, it sends current through resistor R12 and on to the reverb unit.

(b) Twang-like sound. The signal produced at pin 12 of counter 7A passes through the RC-network formed by R42 and C5, and on to the pin 11 input of the type-556 device in location 10C. This device acts as a gated oscillator. Each time the player gets the little fish, the FISH SCORE signal applied at 10C pin 10 allows the type-556 device to briefly produce a signal at pin 9. The frequency of this signal is influenced by the timing of the signal coming from counter 7A through the RC-network. The twang-like sound, heard during play when the player gets the little fish, originates from the current passing through R13 and into the reverb unit.

(c) Screeching sound. The frequency content of the third sound heard during the play sequence, the screeching sound when the shark catches the diver, arises in the noise-generating transistor Q7, which is connected as a diode in Zener mode. The signal from this noise source is then amplified and the level set by amplifiers M9, two type-747 devices with outputs at pins 12 and 10, and the resulting noise signal is applied at pin 3 of the type-556 device in location 10C. Each time the shark catches the diver, the CATCH signal applied at 10C pin 4 allows the type-556 device to produce a signal at pin 5. The screeching sound originates from the current passing through R43 and into the reverb unit.

(d) Output stages. While passing through the reverb unit, the sound signals undergo considerable attenuation. The type-741 amplifier in location 9J acts as an audio amplifying stage to boost up the signal coming from the reverb unit via edge connector pin 8. This amplifier's output then passes through potentiometer R24, the speaker volume adjustment point, and on to the type-LM380 amplifier in location 10F. The output at pin 8 of the LM380 is coupled through capacitor C13 and, via edge connector pin L, on to the speaker.

Transistor Q2 provides the means for disabling the final LM380 amplifier when the game is in the attract mode. When the ATTRACT signal is high, transistor Q2 goes into conduction, bringing pin 1 of the LM380 close to a ground potential. This prevents the amplifier from producing an output at pin 8.

IV. Installation Instructions

4.1 UNPACKING INSTRUCTIONS

4.1.1 EXAMINATION FOR SHIPPING DAMAGE: Before shipment from the factory, components and sub-assemblies of each game are carefully checked for proper operation. However, during shipment some adjustments may have changed or parts may have been damaged. Upon initial removal of the game from the shipping container, examine the exterior of the cabinet; then open the rear panel access door and also examine the interior. Any shipping damage such as a dented, cracked or broken cabinet, sub-assemblies broken loose, etc., should be reported immediately to the shipper and to the factory. Don't forget also to examine the joystick on the front panel.

4.1.2 MECHANICAL INSPECTION: Once it has been determined that the game has been received in good condition, next carefully inspect the interior parts and verify the following:

(a) All slip-on and plug-in connectors are firmly seated (particularly the PCB edge connector)
(b) The fuses are all seated in their holders
(c) No loose foreign objects are present (especially metal objects which could cause electrical short circuits)
(d) No harness wires have become disconnected or pulled loose.

Be sure *all* major assemblies have been checked the TV monitor, the printed circuit board, the electronics tray, the joystick and "START" push button switch on the front panel, the speaker, the coin mechanisms, and the interlock switch activated by the rear panel access door.

Do not go on to the remaining paragraphs in this section until the above mechanical inspection has been thoroughly performed.

4.2 ENERGIZING THE GAME

4.2.1 APPLICATION OF AC POWER: Close the rear panel access door, making sure that it is completely shut at the bottom, and remove the key from the lock. Plug the power cord into an AC outlet providing the AC power listed in the Specifications (Section II of this manual). The wall outlet must accept a three-prong plug and the receptacle must be connected to a good earth ground. After the power cord has been plugged in, the proper response from the game is that the TV screen should light up and images should begin to appear.

If there is no response at all from the game, unplug the power cord and check the AC wall outlet. A simple, safe way to check for presence of AC power at the wall outlet is to plug in an appliance known to be working properly, such as a table lamp, radio, or an electric clock. If the wall outlet passes the check, then presume that the trouble is with the game and refer to Section VI of this manual.

CAUTION: No troubleshooting steps should be attempted inside the cabinet by anyone not familiar with safety measures and repair procedures on electrical equipment.

Do not go on to the remaining paragraphs in this section until the proper response described above has been observed.

4.2.2 CHECK ON OPERATION OF INTERLOCK SWITCH: The interlock switch is a safety switch mounted inside the cabinet, near the bottom edge of the rear panel access door. At the factory this switch is mechanically adjusted so that it will automatically transfer to its "off" position (switch contacts open) whenever the rear panel access door is opened. When the interlock switch is in its "off" position, the AC power leading to the game's power supply is interrupted. When the access door is closed, the interrupt switch is adjusted to be in the "on" position (switch contacts closed) and AC power is allowed to reach the game's power supply, meaning that the game can operate.

After application of AC power per paragraph 4.2.1 above, correct operation of the interlock switch can be checked as follows: unlock the rear panel access door and slowly open the door. The correct response is that by the time the edge of the door has moved about 2 to 3 inches away from the cabinet, the TV screen should go dark. This verifies that the interlock switch has automatically transferred to "off." While opening the access door, do not insert fingers inside the cabinet, and do not allow foreign objects to fall inside. If the TV screen continues to be lighted up even after the door has been opened, immediately close and lock the door, and unplug the power cord from the wall outlet. Then refer to Section VI of this manual to replace and/or adjust the interlock switch.

Do not go on to the remaining paragraphs in this section until the operation of the interlock switch has been checked and found to be correct.

4.3 GAME STRUCTURING

Before putting the Shark Jaws game into operation at the game site, the game structuring should be defined by the owner/operator. The term "game structuring" refers to the game rules and length of the overall elapsed time per play. Game structuring is under control of the owner/operator options described in para. 3.3.4 of Section III in this manual.

In the Shark Jaws game the adjustment of both options is done inside the game cabinet. While they are being performed, the game should be de-energized or not operating. Further, it is recommended that the power cord be unplugged beforehand.

Unlock and open the rear panel access door; this should cause the interlock switch to de-energize the game, as described in para. 4.2.2. But if the switch fails to de-energize the game, immediately close and lock the door, unplug the power cord, and refer to Section VI of this manual to adjust and/or replace the switch.

While being careful to avoid touching any parts of the body against the TV chassis components or other wiring connections inside the cabinet, find the printed circuit board and examine its surface. If game time is to be adjusted, locate the potentiometer (R39) near the large heat sink for the LM309 power transistor. The words "GAME TIMER" are engraved on the board artwork alongside the potentiometer. The stud on the potentiometer body should be moved as shown in Figure 4–1.

If the 1 play/coin–2 plays/coin option is to be adjusted, locate the switch S1 near the large capacitors at the edge connector end of the PCB. Slide the stud on top of the switch toward the edge connector to structure the game for 2 plays per coin, and in the opposite direction for 1 play per coin.

After these physical adjustments have been made, close and lock the rear panel access door and energize the game.

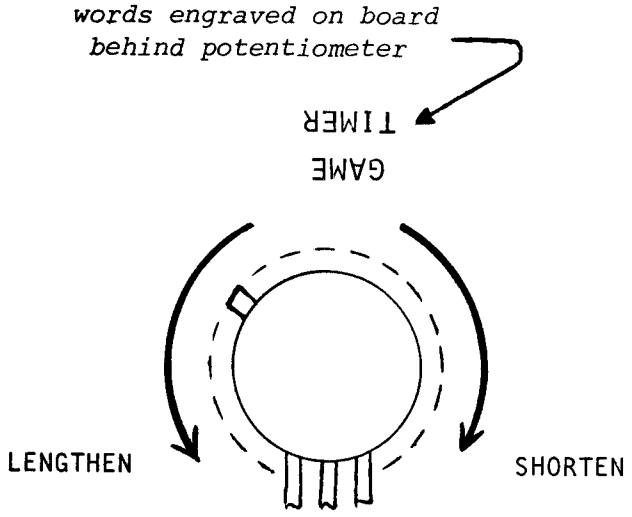

Figure 4–1 Game Time Potentiometer

4.4 FUNCTIONAL CHECK OF GAME OPERATION

The following procedure provides a simple check that can be quickly performed at the game site and that does not require external test equipment. If at any point during this procedure the game's response is observed to be other than the response called for herein, assume the game is not operating correctly and refer to Section VI of this manual. If all the responses are as described here, then all major parts of the game can be assumed to be functioning correctly.

After performing the adjustments described in para. 4.3, Game Structuring, and in para. 4.2, Energizing the Game, the game should be operating in the attract mode, as per para. 3.3.2. The speaker should not be producing any sound. Observe the TV screen.

Just after the game is energized, the score display region in the upper-center portion of the screen may be blank, or some random number may be showing. Either type of response is considered correct. The little fish, diver and shark images should all be present, and their motion should be as described in para. 3.3.2, Attract Mode.

While observing the diver image on the TV screen, move the joystick lever into its fully-forward position, and then into its other fully-extended positions (all the way to the left, right, and rear). Doing this should not produce any change in the diver's location on the TV screen. The diver will continue to move his arms and legs, however.

Look at the "START" switch; no backlighting should be visible. Next depress the button. Doing this should not produce any response from the game.

Depress the coin rejector button on each of the two coin acceptors; make sure that the linkage is operating smoothly. Deposit a coin; no genuine coin should be rejected. Upon acceptance of a coin, the game should respond by changing over to the play mode.

The backlighting to the "START" switch should now come on. However, the speaker still should not be producing any sound, the motion of the images on the screen should be as before, and the score display should remain unchanged.

Depress the "START" button. The speaker should begin to produce the "sonar ping" sound and the other sounds as described in para. 3.3.3, Play Mode. Backlighting should no longer be visible on the "START" switch. On the TV screen the score display region should be blank, indicating that the score has been reset to zero. While observing the diver image on the TV screen, move the joystick lever. The game should respond to the joystick commands and cause the diver to change location on the screen.

Operate the joystick so that the diver gets the little fish. When this occurs, the speaker should produce the brief "twang" sound, the little fish should disappear and a new little fish reappear elsewhere on the screen, and the numeral "1" should appear in the score display region of the screen. Verify that these responses have taken place.

Allow the shark to catch the diver. When this occurs, the speaker should produce the long screeching sound, the diver image should blur and disappear, and a new diver appear elsewhere on the screen after a few seconds.

Next let the game time run out. This will be apparent when the speaker ceases to produce sounds and movement of the joystick lever no longer causes the diver image to change location on the TV screen.

If the game is structured for 1 play/coin, the game will now have reverted back to the attract mode.

If the game is structured for 2 plays/coin, the back-lighting should be visible on the "START" switch. Depress the "START" switch. The game should respond in the same manner as when the switch had been depressed earlier in this procedure. However, after the game time runs out for the second time, no backlighting should become visible on the "START" switch and the game should revert back to the attract mode.

V. Maintenance and Adjustments

5.1 ROUTINE MAINTENANCE

Due to its solid-state electronic circuitry, the Shark Jaws game should require very little periodic maintenance and only occasional adjustment.

5.1.1 CLEANING: Game cabinets and glass may be cleaned with any non-abrasive household cleaner. If desired, special coin machine cleaners which leave no residue can be obtained from distributors.

5.1.2 LUBRICATION: About once every three months lightly spray the rejector linkage portion of the coin acceptor inside the coin mechanisms. Use WD-40® or similar lubricant, and *avoid* spraying the entire coin acceptor. Neither the joystick nor any potentiometer shafts must ever be lubricated in any way.

5.2 ADJUSTMENTS ON TV MONITOR

The TV monitor need be adjusted *only* when the picture is distorted, or if the contrast or brightness seem out of adjustment.

> *NOTE: Access to the TV monitor is possible only from inside the cabinet, and these adjustments are made while the game is energized. Therefore only those familiar with safety measures and repair procedures on electrical equipment should make these adjustments.*

The TV monitor's adjustments function like those of a conventional commercial TV set, except that the volume adjustment has no effect. The Shark Jaws game produces its sound in a speaker separate from the TV monitor. Figure 5–1 shows the location of these adjustments on the rear of the TV monitor chassis. The following are general guidelines to follow while making these adjustments:

BRITE (Brightness)—This should be adjusted before the contrast. Adjust the brightness so that the white lines covering the screen just barely disappear, when the brightness is turned up.

CONT (Contrast)—Adjust so that the images are as bright as possible against the dark background without being blurred.

HORIZ HOLD (Horizontal Hold)—Adjust if the picture is slightly off-center horizontally, if the images appear warped, or if the picture is broken up into a series of diagonal lines. Adjust for a stable, centered picture.

VERT HOLD (Vertical Hold)—This needs adjustment only if the picture appears to be rolling up or down the screen. Adjust for a stable, centered picture.

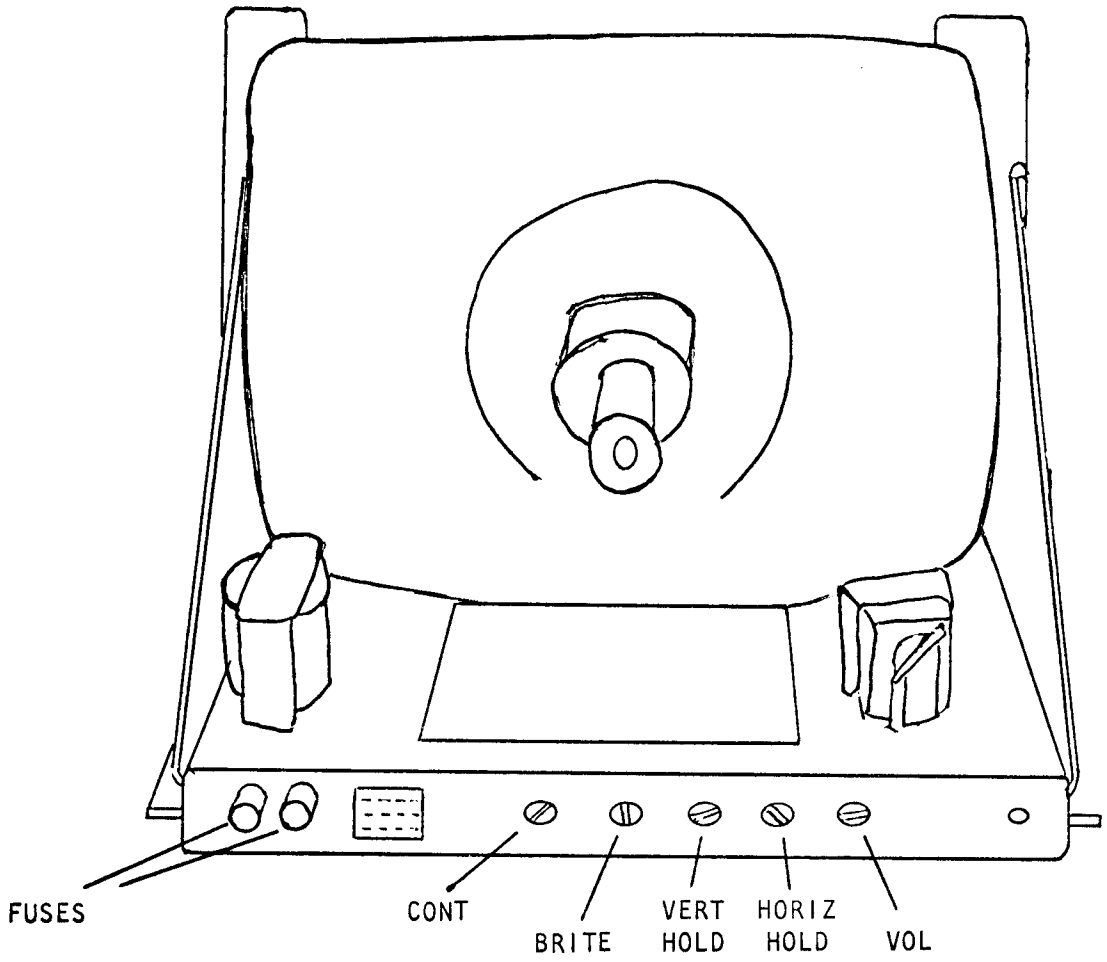

Figure 5–1 Location of Adjustments on TV Chassis

5.3 ADJUSTMENT OF SPEAKER VOLUME

The loudness of sounds produced by the speaker during game play can be adjusted with the potentiometer (Trimpot) R24, which is described in para. 3.4.11 part (d) in Section III of this manual. This potentiometer is mounted on the printed circuit board inside the game cabinet. It is located near the center, at the edge-connector end of the board. Drawing number A003806 in Section VII of this manual shows the exact location of R24.

To make the adjustment, manually move the stud on top of the potentiometer body in one of the two directions shown in Figure 5–2.

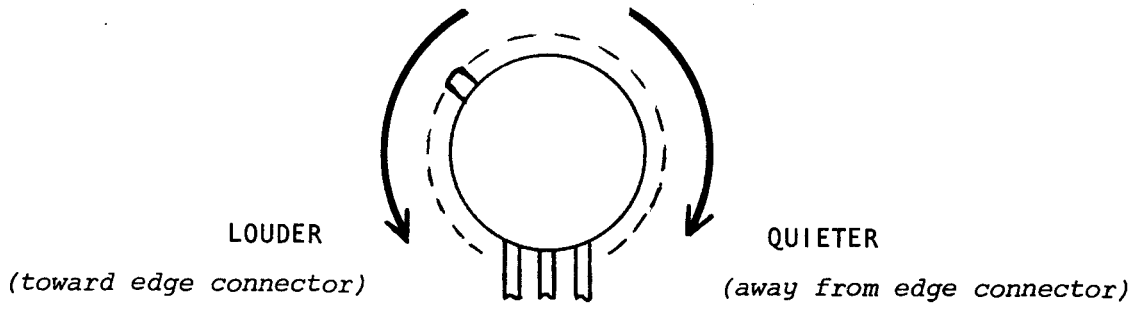

Figure 5–2 Speaker Volume Potentiometer

VI. Troubleshooting and Repair

6.1 GENERAL PROCEDURE

NOTE: This section describes troubleshooting procedures in detail sufficient for a person with moderate technical ability to understand. However, for those interested in gaining more information on video game technology, especially the electronics, we recommend reading the **Video Game Operator's Handbook,** *manual no. TM-043. This book is available from Customer Service, 2175 Martin Avenue, Santa Clara, CA 95050, for $5.00 each, or from your distributor.*

6.1.1 IDENTIFYING THE TROUBLE AREA: The first troubleshooting step should be to note all observable trouble symptoms. Examples of symptoms are: depositing a coin produces no game response, no sound coming out of the speaker at any time, no picture on the TV screen. At the same time also note the game features that still work. A systematic way of checking game operation is to perform the functional check given in Section IV of this manual. Carefully train your eye to pick up all clues; by doing this an experienced troubleshooter can often spot the cause of a trouble even before he opens the cabinet.

Keeping these observations in mind, next apply the understanding of game operation gained from the Theory of Operation (Section III) and from the schematic drawings (Section VII). Narrow down the suspected cause of the trouble to a specific area or areas of the game: the coin mechanisms, TV monitor, harness and front panel components (joystick, "START" switch and the LED which provides backlighting), electronics tray, printed circuit board, and power cord. Be careful not to overlook possible trouble areas that may seem too obvious: a power cord plug that has worked loose from the wall outlet and no longer is fully seated in the receptacle, or a rear panel access door that is not fully closed (thus causing the interrupt switch to block the AC power path to the game).

6.1.2 LOCATING THE TROUBLE CAUSE: Once a problem has been narrowed down to one or more areas, the next step is to perform various tests and measurements to isolate a specific cause of the trouble. Remember that sometimes a very complicated problem, such as erratic game operation, can be traced to a simple cause—the printed circuit board not being fully seated in its edge connector. Start with the most suspect area and trace backwards from the point where the trouble is first observable, using a process of elimination to eventually locate the faulty component, connection, etc. For example, if no sound is audible during game play, first check for a signal at the speaker leads. If no signal is present there, go back through the wiring harness connections to the printed circuit board. If there is still no signal, then systematically check back through the various components of the sound generation circuit.

Substitution of parts is a legitimate and easy way to isolate the cause. For instance, if the PCB is the suspected trouble area, remove it and substitute a known-to-be-good PCB. Then check for correct game operation. Similarly, to check the TV monitor, connect the game to a known-to-be-good monitor. The harness can often be checked by substitution also. Substitute both a known-to-be-good PCB and TV monitor. If the trouble still persists, the harness must be at fault.

While locating the trouble cause, use the technical descriptions in Section III as guides for correct circuit-level operation, and the schematic drawings of Section VII as roadmaps for tracing signal flow paths.

The test equipment for use in troubleshooting is discussed in para. 6.2.

6.1.3 CORRECTING THE TROUBLE CAUSE: In practice, the steps required to correct troubles can range from simple adjustments (fully seating the PCB in its edge connector, changing the setting on a potentiometer, adjusting the picture controls on the TV monitor) to repair of loose connections and replacement of defective parts. Extreme care should be exercised when removing integrated circuit devices and discrete components. Use a 40-watt soldering iron with a small tip designed especially for IC work. To remove an IC device, follow this procedure:

Remove all solder from *both* sides of the PCB, first melting it with the hot iron and then sucking up the molten solder with a Soldapullt® solder sucker. After all the solder is gone, remove the IC device by gently prying up. Afterwards clean the area thoroughly, using an approved PCB cleaning solution to remove any traces of flux and dirt. Alcohol will do in a pinch, if necessary.

Insert the new IC device using an IC insertion tool, making sure that the reference notch is oriented correctly and that the device's leads are not bent during insertion into the board. Afterwards, be sure to solder each lead on *both* sides of the PCB, using as little solder as possible. After soldering, clean the area thoroughly to remove the flux.

Observe the same removal and insertion procedures when replacing discrete components. Trim the leads as close as possible and be sure to orient diodes and capacitors correctly.

6.1.4 VERIFYING CORRECT GAME OPERATION:

After locating and correcting the cause of a trouble, re-energize the game and perform a final check on correct game operation. Doing this will verify that your troubleshooting was correct. If the game operation is still not correct, go back and double-check your work. Make sure that any replaced components were installed correctly. If this was done properly, then start the troubleshooting steps over again. Keep in mind that there may be more than one trouble at a time, and that correcting one trouble can sometimes bring previously undetectable troubles to light.

This verification is especially important when the original trouble had been intermittent, that is, was not happening all the time.

6.2 TEST EQUIPMENT

Electronic troubleshooting of a video game essentially consists of checking for the presence of various signals and of examining their condition. A signal can be thought of as acting like a "messenger" that carries instructions from one unit or circuit to another. Many different types of signals are produced in a video game, and for this reason several unusual and perhaps unfamiliar types of test instruments are used during troubleshooting.

Each instrument has its own set of advantages and disadvantages for examining a given type of signal, and both the depth of the intended troubleshooting capability and budget will determine what instruments will be needed. Some instruments are basic and essential, no matter what size of service facility, while other optional instruments are desirable because they make troubleshooting easier and quicker.

6.2.1 BASIC TEST EQUIPMENT:

(a) The Video Probe. This is a simple but invaluable instrument having two leads--a test-clip lead and a test-probe lead. During troubleshooting of video signals the test-clip lead is left connected to the game side of the video coupling capacitor. On the Shark Jaws game this point is the junction of resistors R3 thru R7 on the PCB. When the test-probe lead is then connected to any video developmental signal, that signal will be coupled to the video signal going to the TV monitor and a video probe picture will appear on the TV screen. The shape and other characteristics of this picture will give information about the signal being probed. The video probe is suited for troubleshooting synchronization and image signals, but will not be useful for extremely fast signals (such as the clock) or for very slow analog or digital signals.

A video probe can be constructed in a few minutes from these common electrical components: a length of 20 AWG (American Wire Gauge) rubber-coated wire, a 4.7K-ohm, 1/4-watt carbon resistor, and two test leads. For the leads, use a single Mouser test clip (Mouser #131C 301 or 302) attached to one end of the wire, and a test prod containing the resistor on the other.

To assemble the video probe, proceed as follows: remove the cap from the test clip and strip 3/16 inch off each end of the wire. Solder one end to the post in the test clip, thread the other end through the hole in the cap, and snap on the cap. Next unscrew the plastic body of the test prod from the point and trim both leads of the resistor to a 3/16-inch length. Solder one resistor lead to the inside of the point. Thread the other end of the wire through the hole in the body and solder it to the other resistor lead; screw the body back onto the point.

(b) The Logic Probe. This is a test instrument designed for fast verification of digital IC outputs. It is small, convenient to carry, easy to read, and relatively inexpensive. The logic probe derives its power from the system under test; it has two power leads, one for connection to ground and the other to +5 volts DC. When the logic probe's tip is held against a digital signal point, three colored lamps in the tip will indicate the signal's condition or state, as follows:

- The red lamp lit indicates a high or logic level 1 (for TTL components, this is +2.4 to +5 volts)
- The white lamp lit indicates a low or logic level 0 (for TTL components, this is 0 to +0.8 volt)
- The blue lamp lit indicates that the signal is changing states
- No lamps lit indicate the grey region between 0 and 1 (for TTL this is between +0.8 and +2.4 volts)

A circuit shorted to ground will illuminate the white lamp and an open circuit will illuminate the red lamp.

The logic probe is readily available from electronic supply sources; a commercial model found satisfactory is the Kurz-Kasch model LP 520.

(c) The Logic Pulser. This test instrument is similar in size and shape to the logic probe, and it also derives its power from the system under test. When the logic pulser's tip is held against a digital signal point, the source and sink capabilities of the pulser override any IC output and the point is driven to the opposite logic level. If the point that the logic pulser is held against is low, pressing the switch on the side of the pulser will introduce a high pulse. Conversely, pulsing a high line will pull that line low momentarily.

During troubleshooting the logic pulser allows stimulation of in-circuit ICs with a shaped digital pulse. For example, a certain feature of the game may not be working and you suspect that a circuit is not receiving the necessary signal. Use the pulser to imitate that signal and if the circuit begins working, you have proved that the signal was in fact missing and you can begin tracking it down. This technique

is very similar to jumping coils in electromechanical games such as pinball machines.

In addition to the regular "pulse" button, there is another switch mounted on the logic pulser. When this switch is set in the "rep" mode, the instrument pulses the digital signal point at a 5-Hz rate or 5 times per second. This extremely low rate is slow enough to allow watching events initiated by the pulser. Counter outputs, for example, are more easily observed when the counter is pulsed or clocked at this rate.

The logic pulser is also readily available from electronic supply sources; a commercial model found satisfactory is the Kurz-Kasch model HL 583.

(d) Oscilloscope. The most versatile test instrument, and also the most expensive, is the oscilloscope. The high-speed TTL integrated circuits used in video games produce fast-rise-time signals. The oscilloscope should have a 50-MHz bandwidth, dual trace and dual time base capability. These latter features allow examination of both input and output signals simultaneously, so that precise timing relationships can be checked. The oscilloscope should also have provision for internal or external sync.

Of the newer, solid-state oscilloscopes, a satisfactory model is the Tektronix 465.

(e) VOM or Volt-Ohmmeter. This common measuring instrument is extremely useful in video game troubleshooting. It can be used to check line voltage, transformer secondary windings, continuity, resistance, power supply voltages, and to some extent used for measurements in the analog circuitry.

One commercial model found satisfactory is the Simpson 260.

6.2.2 OPTIONAL TEST EQUIPMENT:

(a) The Logic Comparator. This test instrument's main benefit is that it can be used to check the functioning of an integrated circuit device while the device is still in place on the printed circuit board. The logic comparator performs the check by comparing the suspect ICs functioning with that of an identical-type reference IC mounted in the instrument itself. Suppose that the functioning of a type-74193 device on the PCB is suspected to be defective. First insert a program card with a known-to-be-good 74193 into the logic comparator, and then clip the comparator test leads onto the leads of the suspect device. If there are any logic state differences between the reference IC and the suspect IC under test, then an LED on the logic comparator will light up to indicate which output is not functioning correctly. Once a defective IC has been located, it should be replaced.

Logic comparators are readily available from electronic supply sources.

(b) Universal Test Fixture. In situations where a large number of video games are being serviced, investment in the Universal Test Fixture will be justified. This item of test equipment forms a test station for troubleshooting printed circuit boards after they have been removed from the game cabinet. The Universal Test Fixture has a full set of controls for operating the game and also has its own TV monitor. The game's PCB is plugged into an edge connector mounted on the side of the Fixture; with this arrangement the PCB is positioned in a convenient way for connecting probes and other test instruments.

A program card inserted into a receptacle in the top of Fixture takes the place of the game's interconnect wires. The program card thus sets up the Fixture for each particular game; the game's name is clearly printed on the program card itself.

With the Universal Test Fixture the method of troubleshooting via substitution of known-to-be-good parts is made fast and convenient. For example, suppose that the TV picture in a game is completely broken up and you want to determine whether the game or monitor is causing the problem. Remove the PCB and plug it into the Fixture's edge connector, and also insert the correct program card for that game. If the picture on the Fixture's monitor is correct, then you know that the problem lies in the game's monitor.

6.3 SPECIFIC TROUBLESHOOTING INFORMATION

The following subparagraphs give additional troubleshooting information about certain areas of the Shark Jaws game.

6.3.1 ANTENNA STATIC MODIFICATION: This subparagraph gives a procedure for modifying the antenna wire connected to pin 10 of the printed circuit board's edge connector. The antenna connects to the base of transistor Q3. Any signal on the Antenna that brings Q3 into conduction will cause the Q latch formed by transistors Q4 and Q5 to be reset, as described in para. 3.4.2 of Section III. This static modification feature is included in the coin and credit circuitry so that it will not be possible for a player to obtain bonus games by inducing a static charge in the coin entrance plate or any other metal part of the game--provided that the antenna has been cut to optimum length.

The Antenna is a wire approximately one foot long, with one end intentionally left not connected. When a static discharge occurs, an electric current is induced in this wire and an impulse is transmitted to the credit latch circuit. This impulse resets the latch, turning off game

credit and switching the game over to the attract mode. To test the static modification feature, touch the end of the antenna wire with your finger; the body usually has enough capacitance to trigger the circuitry. Sensitivity of the static modification feature may be adjusted by changing the length of the antenna wire. Lengthening the wire increases sensitivity, so that a lesser charge will turn off game credit. Cutting the wire shorter decreases sensitivity, so that a larger charge is required for triggering the circuit.

If there are problems with static charges accidentally shutting off the game, try cutting the wire shorter, in increments of 1/2 inch at a time. Be aware, however, that if the antenna wire is cut too short, players may be able to obtain free game credit (bonus games) by inducing a static charge in the game.

6.3.2 **TV MONITOR**: The TV monitor is a self-contained unit housed in its own chassis. A trouble's cause may be narrowed down to the monitor—either by the substitution method using a known-to-be-good monitor, or by verifying presence of AC power to the monitor power supply and presence of the *correct* composite video signal. The entire monitor can then be removed from the game cabinet. Doing this facilitates troubleshooting steps, because all monitor components will then be accessible.

A schematic diagram of the monitor circuitry is included in Section VII of this manual. After disconnecting and removing the monitor from the game, standard TV troubleshooting techniques are adequate for locating causes of trouble. Additional servicing information is available from the monitor manufacturer (Motorola).

6.3.3 **COIN MECHANISM**: If a player inserts a coin and the game does not respond, first check the coin mechanism. If pressing the coin rejector button forces the rejector mechanism to return the coin, then examine the coin to make sure that it is genuine. If it is, then use a set of your own test coins (which should include both very new and very old, worn coins) to determine whether or not the player's coin is undersize or underweight. If your test coins are also returned, this indicates that servicing of the coin acceptor portion of the coin mechanism is called for. Generally the cause of this particular problem is an improperly adjusted magnet gate.

Inside the coin mechanism a magnet is used to test the metallic composition of the coin. Highly magnetic coins, such as those made of steel or iron, will be retained by the magnet and can be returned by actuating the wiper operating lever. Coins having comparatively high magnetic properties will be slowed down by the magnet, and will drop off the end of the rail short of the "accept" entrance and be returned. Coins having little or no magnetic properties, such as brass or zinc coins, will pass through the magnetic field so fast that they will overshoot the "accept" entrance and be returned.

A magnetic gate adjusted with too large a gap may pass both genuine and counterfeit coins. An adjustment with too small a gap can lead to rejection of some or even all coins. Over a period of time, the screw that adjusts the magnet gate has a tendency to work loose, resulting in a gradual narrowing of the gate. At first, only the thickest (i.e., newest) coins are rejected. As time passes, more and more coins are rejected until finally player complaints lead to the calling of the game repairman.

If pressing the coin rejector button does not cause the coin to be returned, and if the game still does not respond, then check the coin mechanism to see if the coin is jammed inside.

If you are certain that the coin is genuine, and that the coin passes through the coin mechanism and into the cash box, then the lack of game response is probably due to some kind of electrical trouble. Check for signals at the electrical contacts of the coin mechanism before moving on to the harness and other parts of the circuitry.

VII. Schematics, Drawings and Parts Lists

Number	*Title*
A004150	Parts List, Top Assembly
A004150	Top Assembly
004148	Parts List, Control Panel Assembly
A004148	Control Panel Assembly
004145	Harness Schematic
004147	Parts List, Electronics Tray Assembly
A004147	Electronics Tray Assembly
003806	Printed Circuit Board Schematic
003806	Parts List, Printed Circuit Board Assembly
A003806	Printed Circuit Board Assembly
[none]	Schematic, Motorola XM501/XM701 Monitor

ASSEMBLY TITLE / TOP ASSEMBLY - JAWS	P/L A004150

PARTS LIST SPECIFICATION	Page 1 of 1	
Drawn		
Checked	Mech. Eng.	
Proj. Eng.	Elec. Eng	REV. B

Rev.	Description	Date	Apprv.	Rev.	Description	Date	Apprv.
A							
B	Rev per ECN 1637	9-17-75					

Item	Part Number	Qty.	DESCRIPTION
1	A003522	1	Cabinet Assembly
2	A003544	1	TV Mount Board Assembly
3	A004146	1	PC Mount Board Assembly
4	A004147	1	Electronics Tray Assembly
5	A004148	1	Control Panel Assembly
6	004149	1	Plex Screen W/Artwork
7	001573	1	Retainer, Upper Plex
8	002728	2	Panel Mtg. Brackets
9	000869	2	Speaker, Grill
10	48-002	1	Speaker, 4" Motorola
11	A003637	1	Coin Door Assembly
12	71-2114	1	Lock, Mech., Barrel Cartridge , National
13	75-5120	12	Bolt, Carriage, #10-24 x 1.25" Long
14	75-010S	12	Washer, Flat, #10
15	75-040	12	Washer, Split-Lock, #10
16	75-911S	6	Nut, Hex, #10-24
17	75-931	6	Nut, Wing, #10-24
18	75-035S	2	Washer, Flat, ¼" Wide Pattern
19	72-6620	4	Screw, SM, Pan Hd., Phil #6 x 1.25" Lg.
20	72-6812	6	Screw, SM, Pan Hd., Phil #8 x .75" Lg.
21	72-6608	4	Screw, SM, Pan Hd., Phil #6 x .50 Lg.
22	75-5544 N	2	Bolt, Carriage, #¼-20 x 2.75" Lg.
23	75-015S	2	Washer, Flat, ¼
24	75-045	2	Washer, Split Lock, ¼
25	75-935	2	Nut, Wing, ¼-20
26	73-77004	8	Pop Rivet, Alum. 3/16" Dia. x .68 Lg.
27	003752	1	Bezel, Cardboard
28	004178-03	1	Acetate Overlay
29	A004237	1	Coin Mech Harness
30	TM047	1	Shark Jaws, Operation Maintenance Service Manual
31	003896-XX	1	Shipping Carton

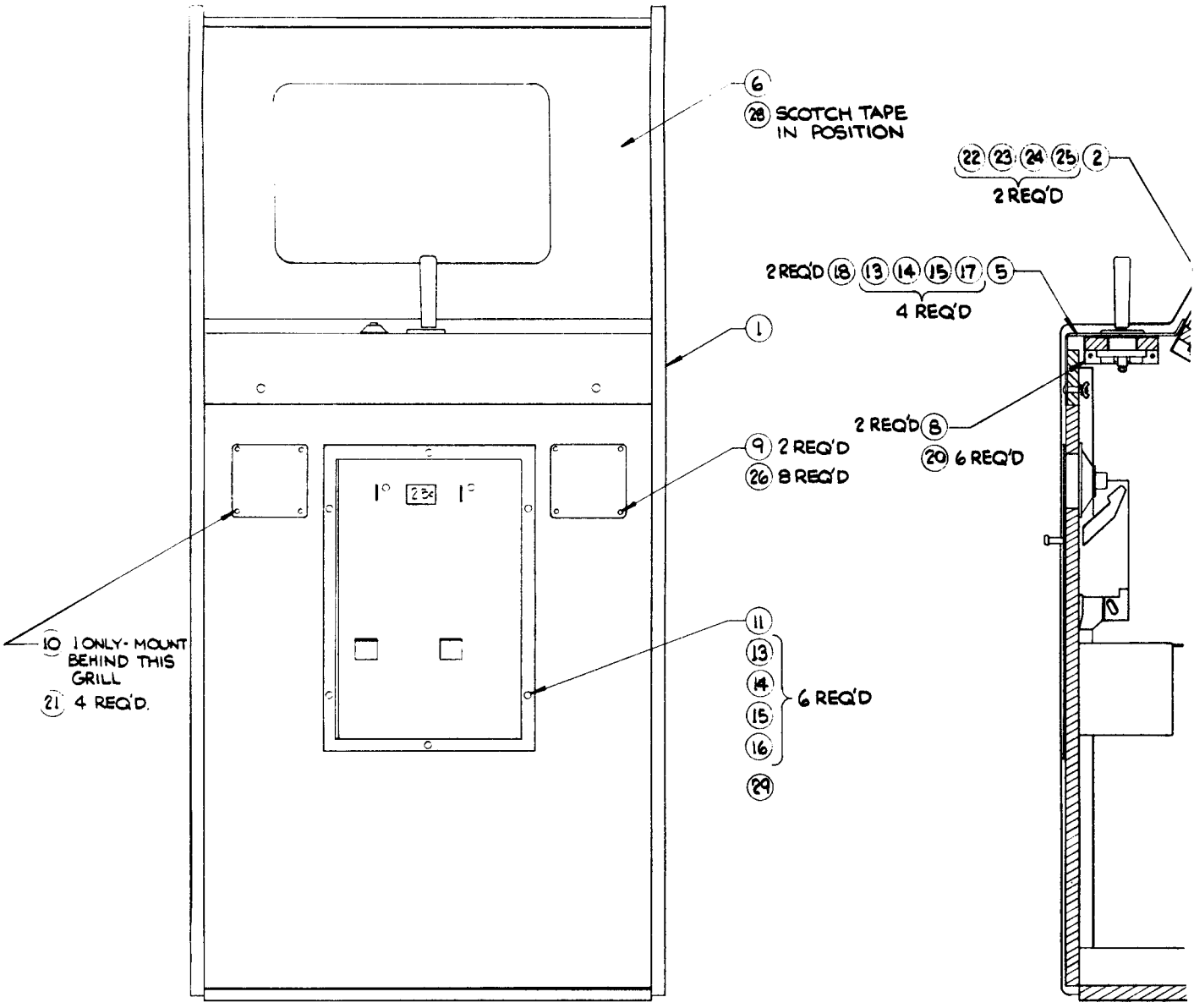
6
28 SCOTCH TAPE IN POSITION
22 23 24 25 2
2 REQ'D
2 REQ'D 18 13 14 15 17 5
4 REQ'D
1
2 REQ'D 8
20 6 REQ'D
9 2 REQ'D
26 8 REQ'D
10 1 ONLY- MOUNT BEHIND THIS GRILL
21 4 REQ'D.
11
13
14
15
16
6 REQ'D
29

REVISIONS				
SYM	DESCRIPTION	DATE	APP'D	CHK'D
A	PRODUCTION REL		EO	RLT
B	REV PER ECN 1637	9/5/13	EO	RLT

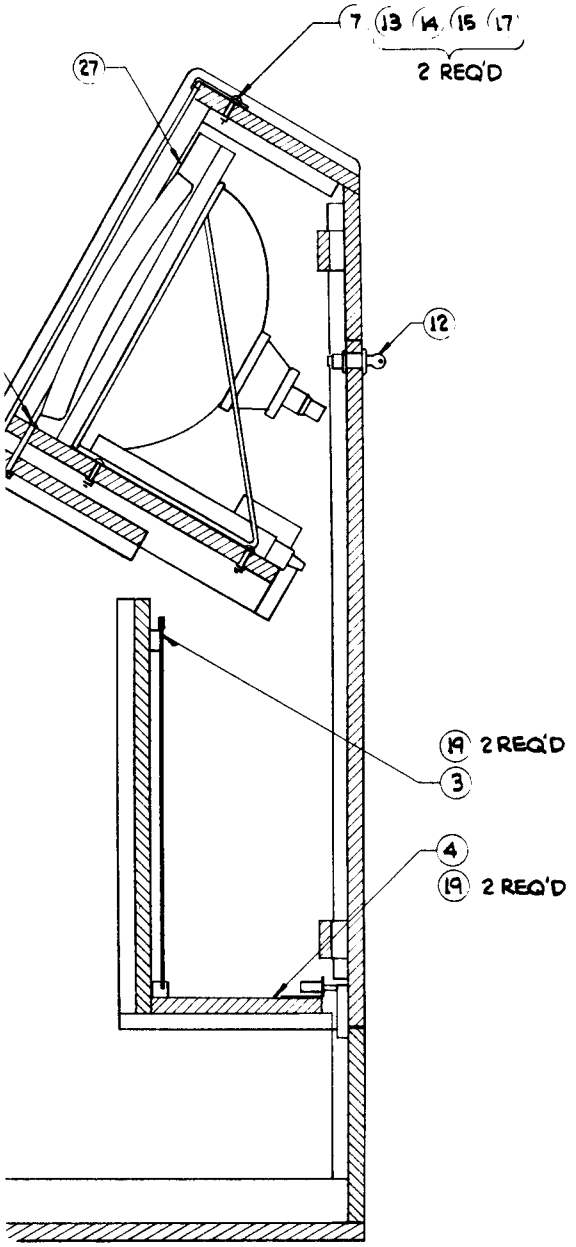

INTERPRET THIS DRAWING PER USASI Y14.5

UNLESS OTHERWISE SPECIFIED DIMENSIONS ARE IN INCHES
TOLERANCES ON
FRACTIONS ± 1/16 x ± .1
ANGLES ± 1° xx ± .03
SURFACE FINISH ✓ xxx ± .010

MATERIAL
SEE P/L 004150

DRAWN BY DATE
CHECKED
PROJECT ENGINEER
DOCUMENT CONTROL

ATARI INCORPORATED
14600 Winchester Boulevard
Los Gatos, California 95030

TITLE
TOP ASSEMBLY - JAWS

SIZE D | DRAWING NO A004150 | REV B
SCALE | SHEET 1 OF 1

NEXT ASSY	USED ON
	JAWS

APPLICATION

A004150 1/1 B

ASSEMBLY TITLE / CONTROL PANEL ASSY - JAWS P/L 004148

PARTS LIST SPECIFICATION Page 1 of 1

Drawn		
Checked	8/22/75	Mech. Eng.
Proj. Eng.		Elec. Eng
		REV. B

Rev.	Description	Date	Apprv.	Rev.	Description	Date	Apprv.
A		8-22-75					
B	Rev per ECN 1636	9-17-75					

Item	Part Number	Qty.	DESCRIPTION
1	004137	1	Control Panel W/Artwork
2	004138	1	Spacer Block
3	A002303-06	1	JoyStick Assy
4	62-002	1	Switch, Push Button, Panel, Mtg.
5	A004144	1	Assy, Harness, Control Panel
6	72-6608	1	Screw, Sht. Met., Pan Hd, Phil, #6 x ½" Lg.
7	001856	1	Bushing, Switch

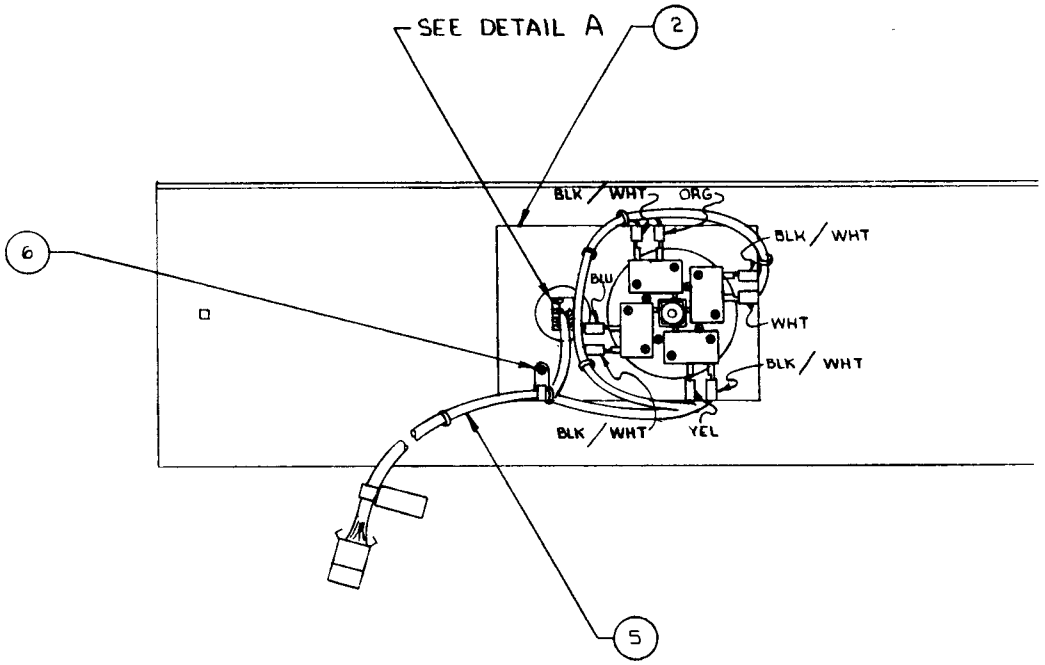
SEE DETAIL A
2
6
5
BLK / WHT
ORG
BLK / WHT
BLU
WHT
BLK / WHT
BLK / WHT
YEL

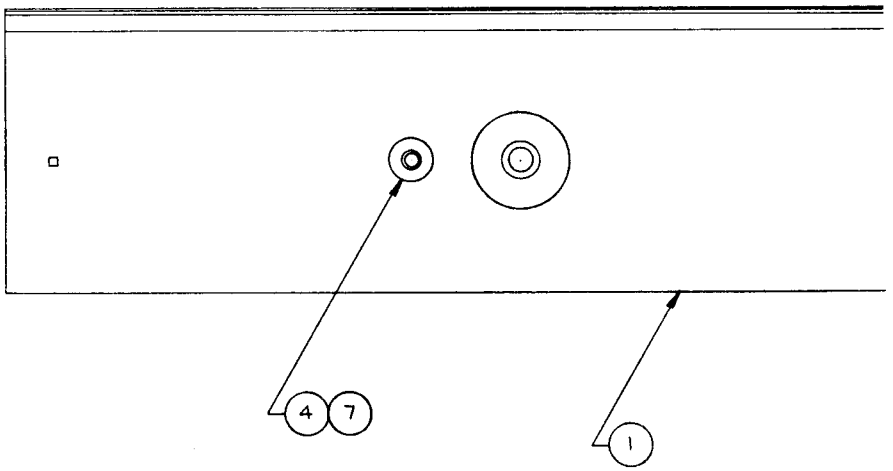
4
7
1

REVISIONS				
SYM	DESCRIPTION	INITIALS OR DATE: DRFTG	CHECK	ENGRG
B	PROD. RELEASE	CL		

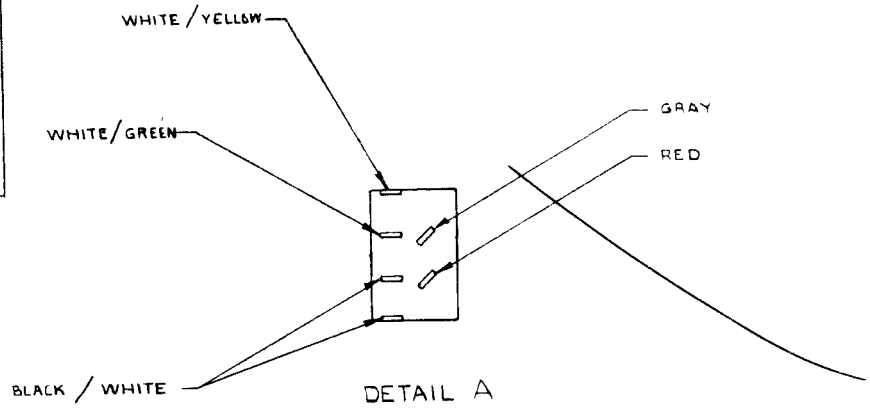

DETAIL A
SCALE: 2/1
ITEM 5 REMOVED FOR CLARITY

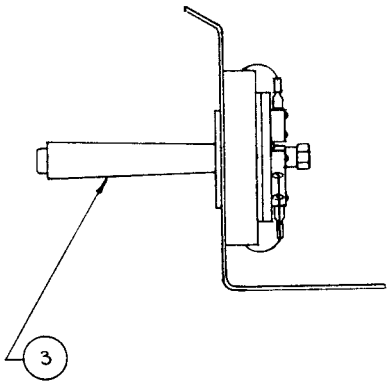

A004150 JAWS		
NEXT ASSY	USED ON	
APPLICATION		

INTERPRET THIS DRAWING PER USASI Y14.5

UNLESS OTHERWISE SPECIFIED DIMENSIONS ARE IN INCHES
TOLERANCES ON
FRACTIONS = ±1/16 x = ±.1
ANGLES = ±1° xx = ± .03
SURFACE FINISH ✓ xxx = ± .010

MATERIAL
SEE P/L
004148

PROJECT ENGINEER

DOCUMENT CONTROL

TITLE ASSEMBLY CONTROL PANEL - JAWS

SIZE	DRAWING NO.	REV
D	A004148	B

SCALE 1/2 SHEET 1 OF 1

A004148 1 B 1

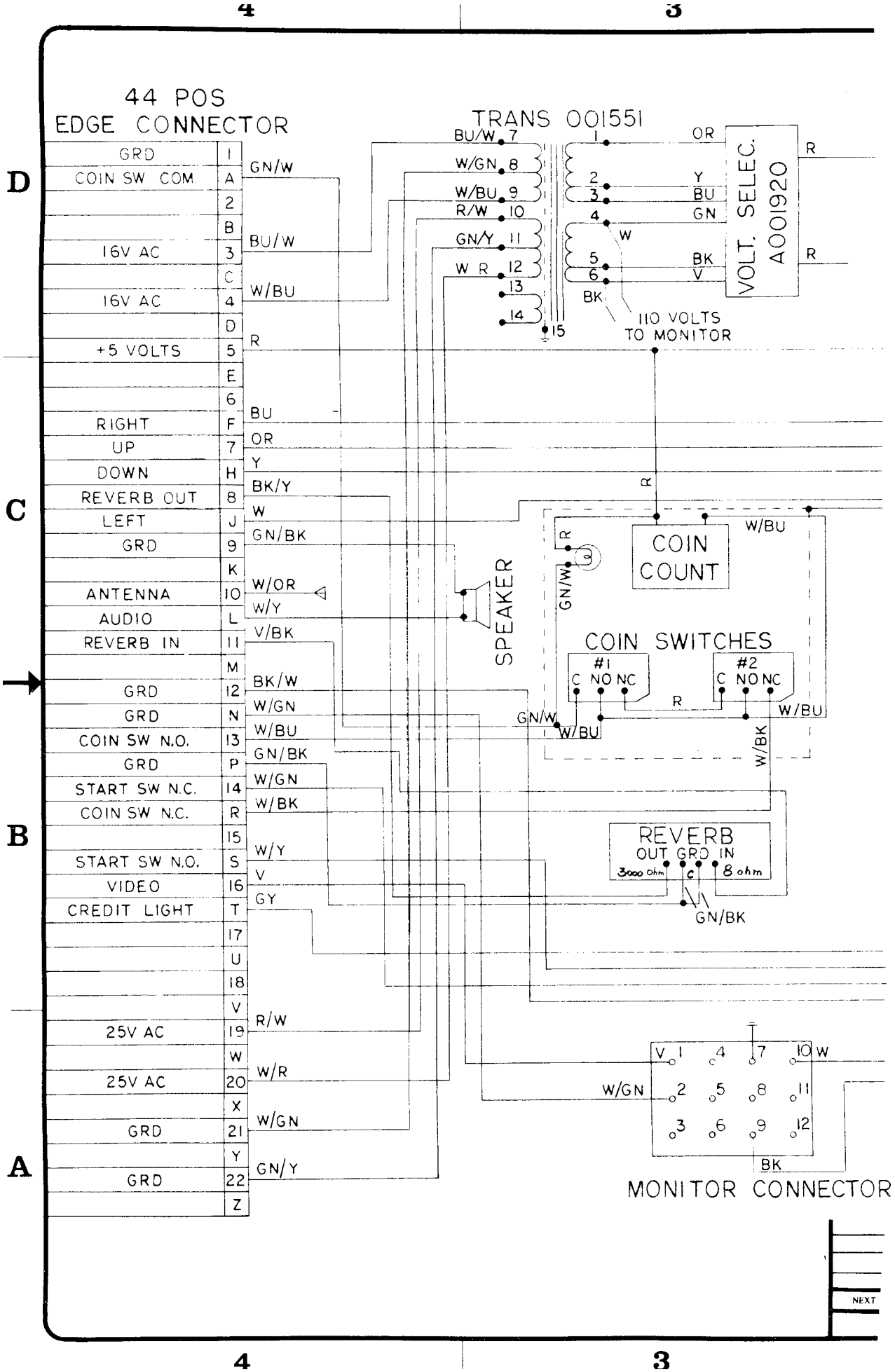
4
3
44 POS
EDGE CONNECTOR
GRD 1
COIN SW COM A
2
B
16V AC 3
C
16V AC 4
D
+5 VOLTS 5
E
6
RIGHT F
UP 7
DOWN H
REVERB OUT 8
LEFT J
GRD 9
K
ANTENNA 10
AUDIO L
REVERB IN 11
M
GRD 12
GRD N
COIN SW N.O. 13
GRD P
START SW N.C. 14
COIN SW N.C. R
15
START SW N.O. S
VIDEO 16
CREDIT LIGHT T
17
U
18
V
25V AC 19
W
25V AC 20
X
GRD 21
Y
GRD 22
Z
GN/W
BU/W
W/BU
R
BU
OR
Y
BK/Y
W
GN/BK
W/OR
W/Y
V/BK
BK/W
W/GN
W/BU
GN/BK
W/GN
W/BK
W/Y
V
GY
R/W
W/R
W/GN
GN/Y
TRANS 001551
BU/W 7
W/GN 8
W/BU 9
R/W 10
GN/Y 11
W R 12
13
14
15
1 OR
2
3 Y
BU
4 GN
W
5 BK
6 V
BK
VOLT. SELEC.
A001920
R
R
110 VOLTS
TO MONITOR
SPEAKER
COIN
COUNT
W/BU
COIN SWITCHES
#1
C NO NC
#2
C NO NC
R
W/BU
GN/W
W/BU
W/BK
REVERB
OUT GRD IN
3000 ohm
C
8 ohm
GN/BK
V 1 4 7 10 W
W/GN 2 5 8 11
3 6 9 12
BK
MONITOR CONNECTOR
NEXT
D
C
B
A
4
3

REVISIONS		
SYM	DESCRIPTION	INITIALS and DATE
		DR E.G.
A	PROD REL 9-5-75	

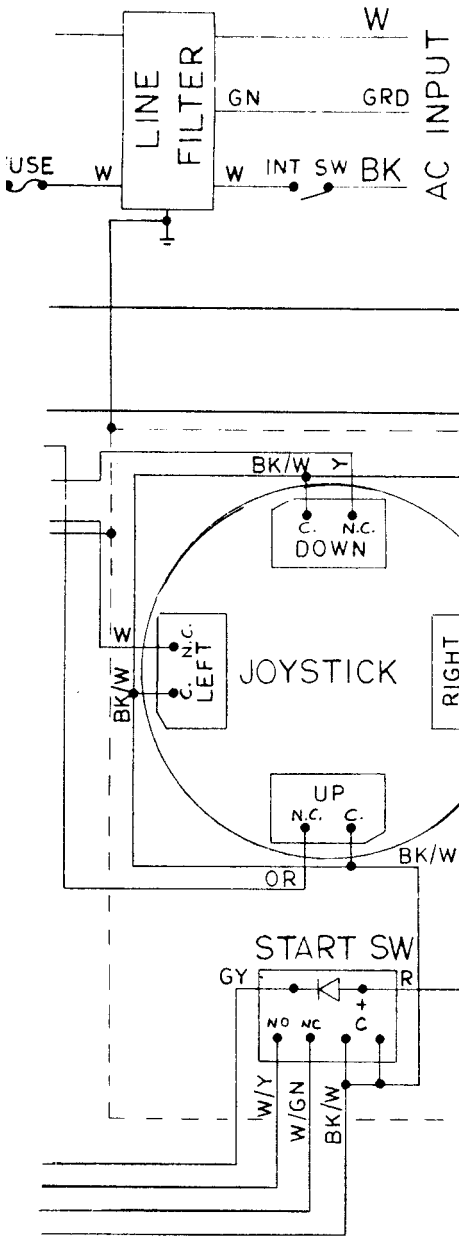

110 VOLTS
FROM TRANS

INTERPRET THIS DRAWING PER USASI Y14.5	DRAWN BY B.R.R. DATE	
UNLESS OTHERWISE SPECIFIED DIMENSIONS ARE IN INCHES TOLERANCES ON: FRACTIONS = ±1/16 .x = ±.1 ANGLES = ±1° .xx = ± .03 SURFACE FINISH ✓ .xxx = ± .010	CHECKED	
	PROJECT ENGINEER	TITLE JAWS HARNESS - SCHEMATIC
MATERIAL:	DOCUMENT CONTROL	SIZE C DRAWING NO 004145 REV A
		SCALE SHEET 1 OF 1

SY	USED ON
APPLICATION	

DRAWING NO. | SHEET | REV.

ASSEMBLY TITLE / JAWS ELECTRONIC TRAY ASSY **P/L** 004147

PARTS LIST SPECIFICATION Page 1 of 1

Drawn		
Checked	Mech. Eng.	
Proj. Eng.	Elec. Eng	REV. C

Rev.	Description	Date	Apprv.	Rev.	Description	Date	Apprv.
A	**PROD REL**						
B	Rev per ECN 1635						
C	Rev per ECN 1648,1662 and 1660						

Item	Part Number	Qty.	DESCRIPTION
1	003539	1	Electronics Tray (Reversed Tank II)
2	A004143-01	1	Harness
3	001551	1	Transformer
4	54-401	1	Power Cord, 8'
5	68-001	1	A.C. Power Interlock Switch
6	000268	1	Bracket, Switch MTG
7	90-3001	1	Filter, Power Line
8	79-3201	1	Fuse Holder
9	46-201132	1	Fuse
10	72-6608	17	Screw, S.M. Pan Hd, Phil #6 x ½ Lg.
11	72-6812	4	Screw, S.M. Pan Hd, Phil #8 x 3/4 Lg.
12	000622	1	Cover, Transformer
13	A001920	1	Harness, Voltage Selection
14	*A001921-01	1	Shorting Block, 95V
15	*A001921-02	1	Shorting Block, 110V
16	*A001921-03	1	Shorting Block, 220V H
17	*A001921-04	1	Shorting Block, 220V L
18	003826-03	1	Dust Filter Foam "Cushion"
19	A004243	1	Reverb Assy
20	A003100-04	1	Fuse Jumper Harness
21	A002808-03	1	Int. Sw. Jumper

* Install Shorting Block per Voltage Required

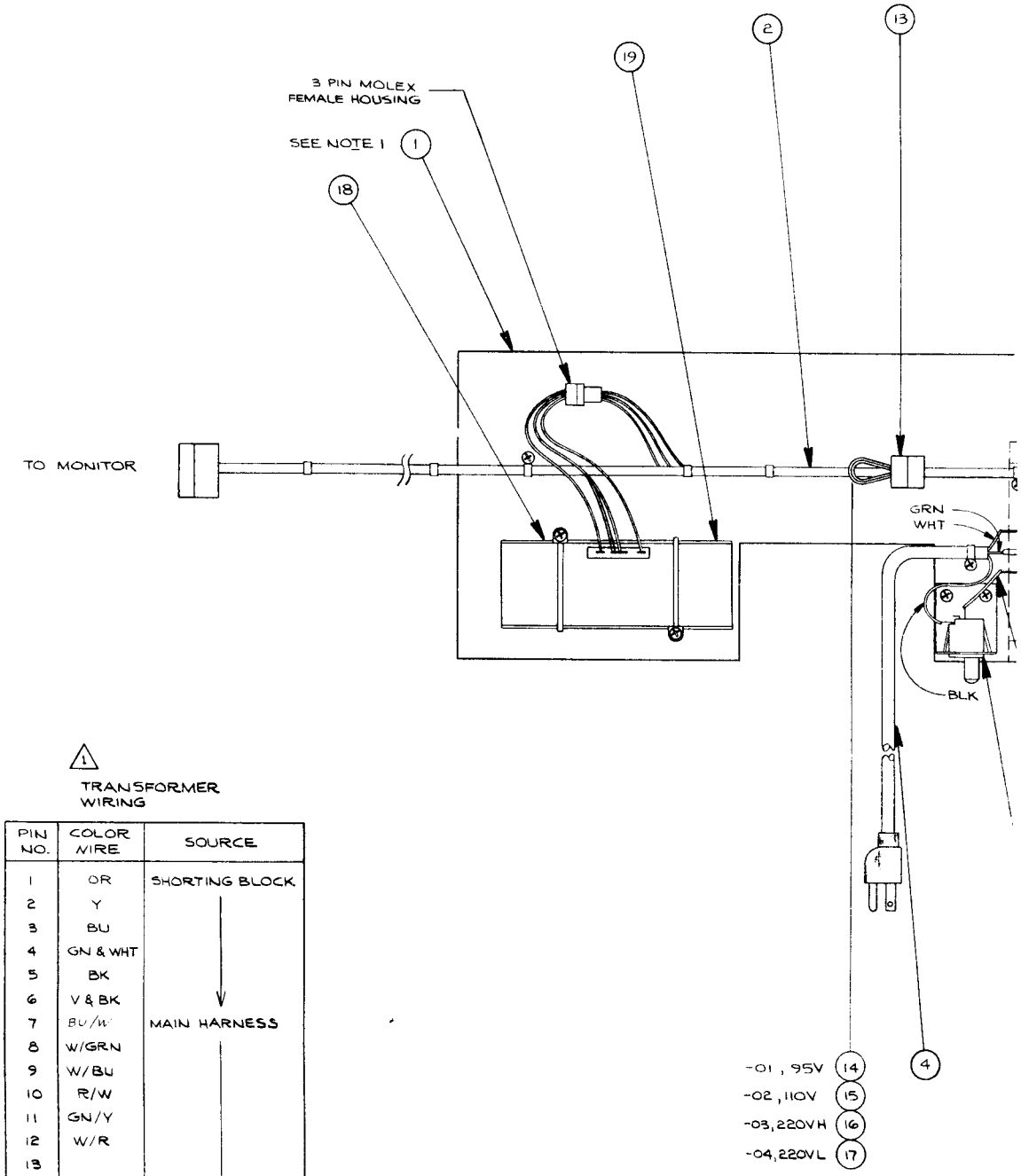

⚠1

TRANSFORMER WIRING

PIN NO.	COLOR WIRE	SOURCE
1	OR	SHORTING BLOCK
2	Y	
3	BU	
4	GN & WHT	
5	BK	
6	V & BK	
7	BU/W	MAIN HARNESS
8	W/GRN	
9	W/BU	
10	R/W	
11	GN/Y	
12	W/R	
13		
14		
15	GRN	

REVISIONS				
SYM	DESCRIPTION	INITIALS and DATE		
		DRFTG	CHECK	ENGRG
A	PRODUCTION RELEASE MS.	9-8-75		
B	REV PER ECN 1635	9-16-75		
C	REV/ECNS 1648, 1660, 1662	9-25-75		

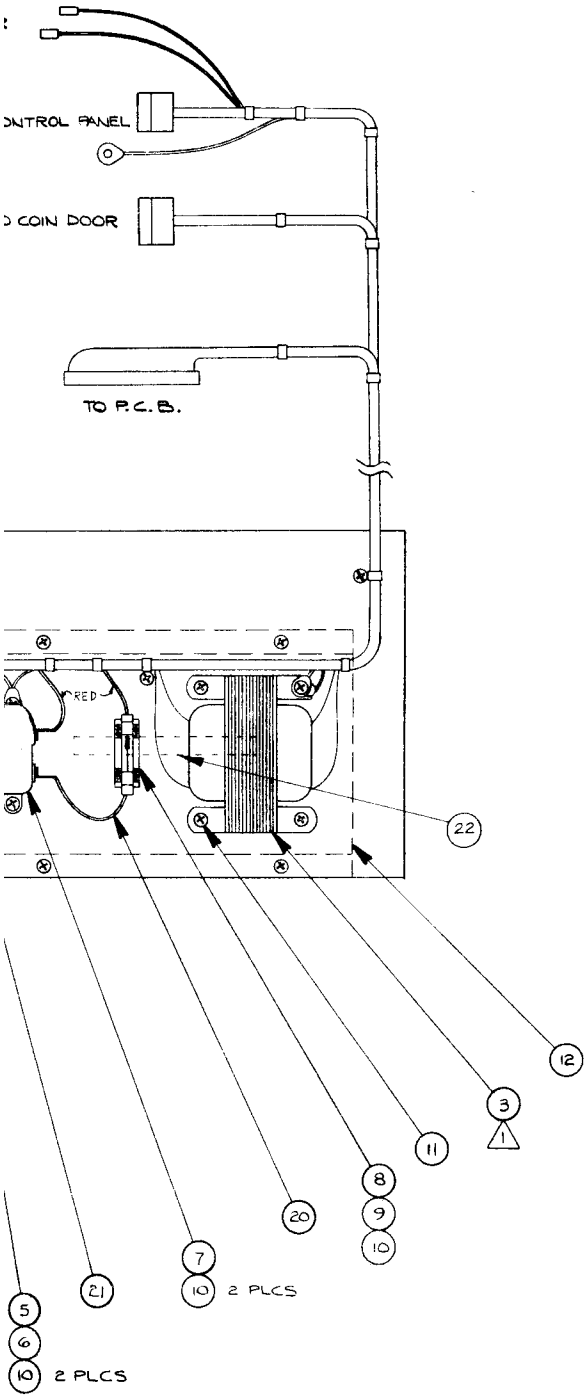

NOTES:

1. THE JAWS TRAY IS THE TANK II TRAY REVERSED
2. USE ITEM 10 S.M. PAN HD., PHIL #6 x 1/2 LG SCREW WITH HARNESS TIE DOWNS, ITEM 19 REVERB ASSY, & ITEM 12 TRANSFORMER

	JAWS
NEXT ASSY	USED ON
APPLICATION	

INTERPRET THIS DRAWING PER USASI Y14.5

UNLESS OTHERWISE SPECIFIED DIMENSIONS ARE IN INCHES TOLERANCES ON:
FRACTIONS ± 1/16 x ± .1
ANGLES ± 1° xx ± .03
SURFACE FINISH ✓ xxx ± .010

MATERIAL:
SEE P/L 004147

DRAWN BY DATE
CHECKED
DESIGN ENGINEER
PRODUCT ENGINEER
DOCUMENT CONTROL
APPROVED

TITLE
JAWS — ELECTRONICS TRAY ASSEMBLY

SIZE D | DRAWING NO A004147 | REV C

SCALE X | SHEET 1 OF 1

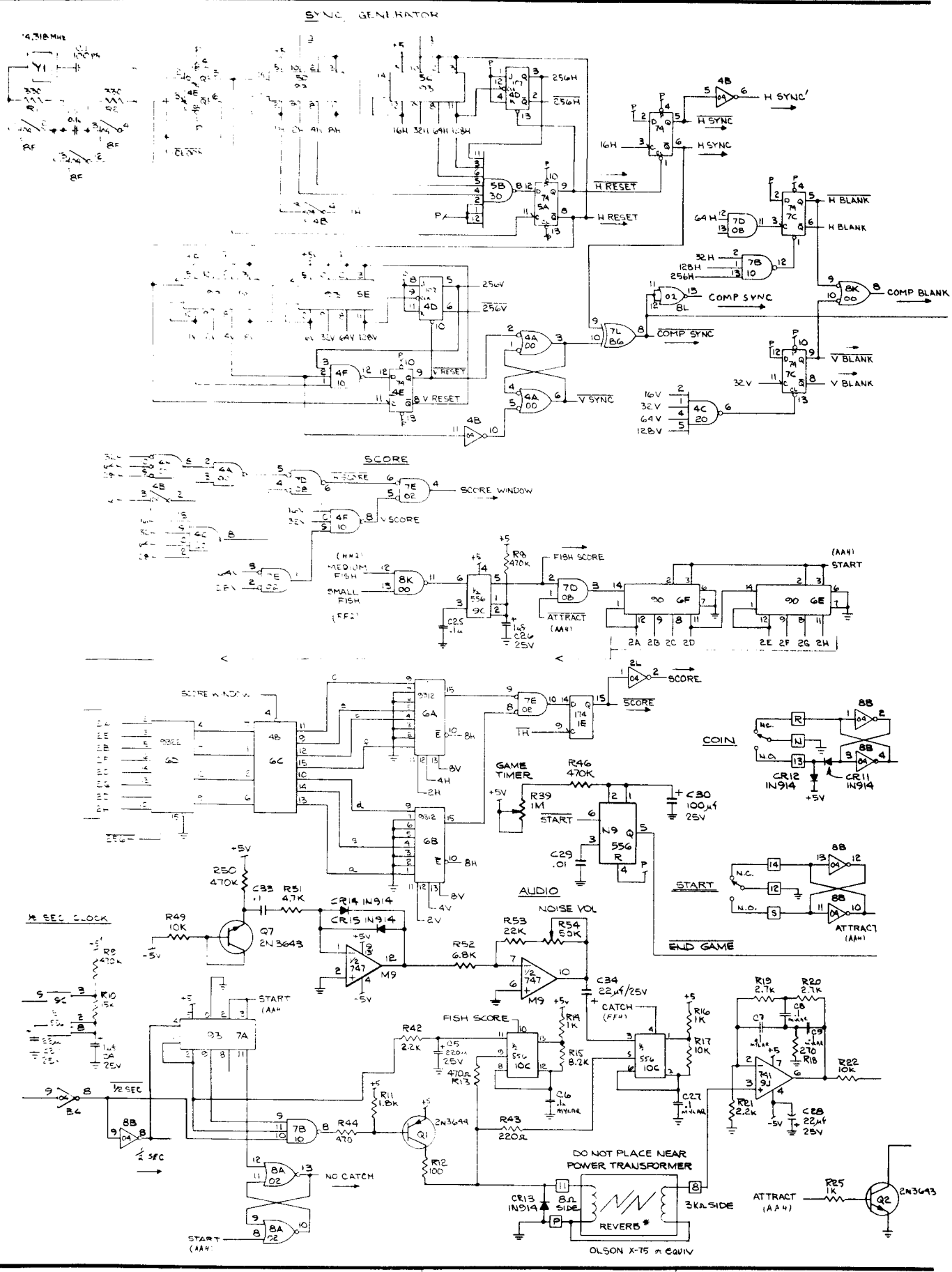
SYNC GENERATOR
14.318 MHz
Y1
H SYNC
H RESET
H BLANK
COMP BLANK
COMP SYNC
V BLANK
V SYNC
V RESET
SCORE
SCORE WINDOW
H SCORE
V SCORE
FISH SCORE
ATTRACT
START
COIN
GAME TIMER
AUDIO
NOISE VOL
END GAME
CATCH
NO CATCH
½ SEC CLOCK
½ SEC
FISH
DO NOT PLACE NEAR POWER TRANSFORMER
REVERB *
OLSON X-75 or EQUIV
3KΩ SIDE
8Ω SIDE
ATTRACT

REVISIONS				
SYM	DESCRIPTION	INITIALS and DATE		
		DRFTG.	CHECK	ENGRG.
A	PRODUCTION RELEASE	9/3/75		
B	REV PER ECN 1613, 1669	10/13/75		

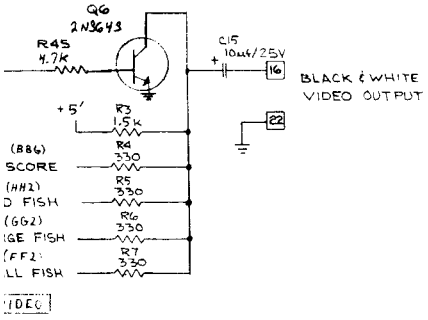

POWER SUPPLY

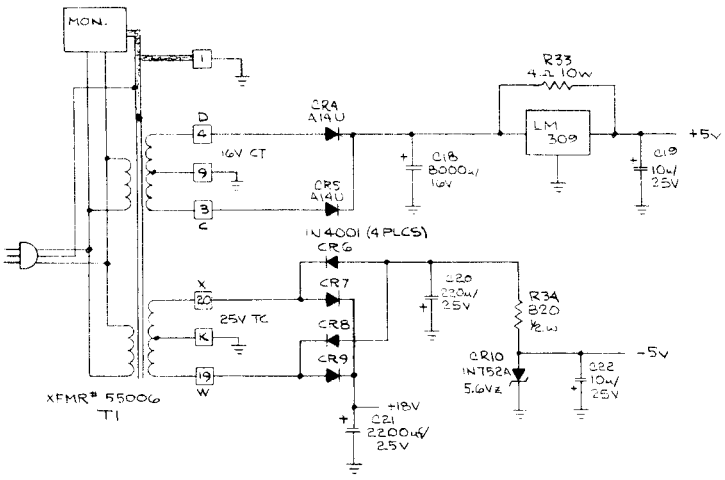

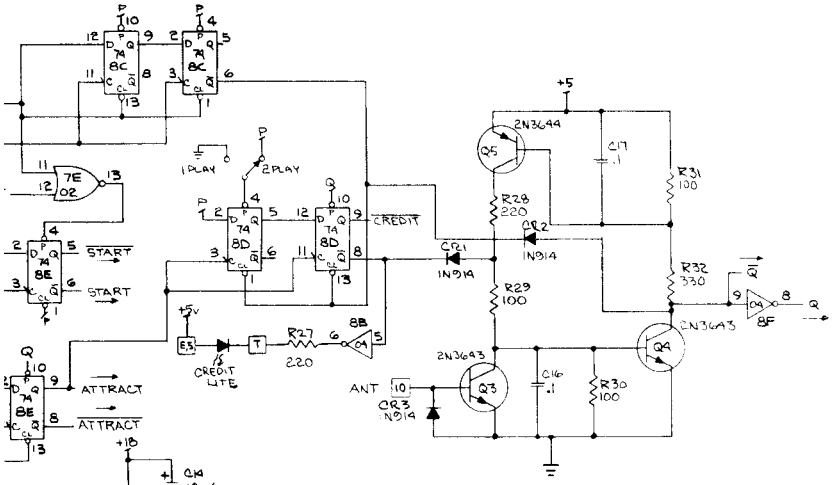

SPARE GATES

7486	1FA
74153	5LB
74174	1EE
7400	7NC
7402	8AA

Switch Pos 1 – LOWERS VOLUME DURING ATTRACT
2 – TURNS OFF LM380 " "

A003806	JAWS		
NEXT ASSY	USED ON		
APPLICATION			

INTERPRET THIS DRAWING PER USASI Y14.5

UNLESS OTHERWISE SPECIFIED DIMENSIONS ARE IN INCHES
TOLERANCES ON
FRACTIONS ± 1/16 .X ± .1
ANGLES ± 1° .XX ± .01
SURFACE FINISH √ .XXX ± .010

MATERIAL

DRAWN BY DATE

CHECKED

DESIGN ENGINEER

DOCUMENT CONTROL

TITLE SCHEMATIC, JAWS P.C. BOARD

SIZE D | DRAWING NO. 003806 | REV B

SCALE — | SHEET 1 OF 2

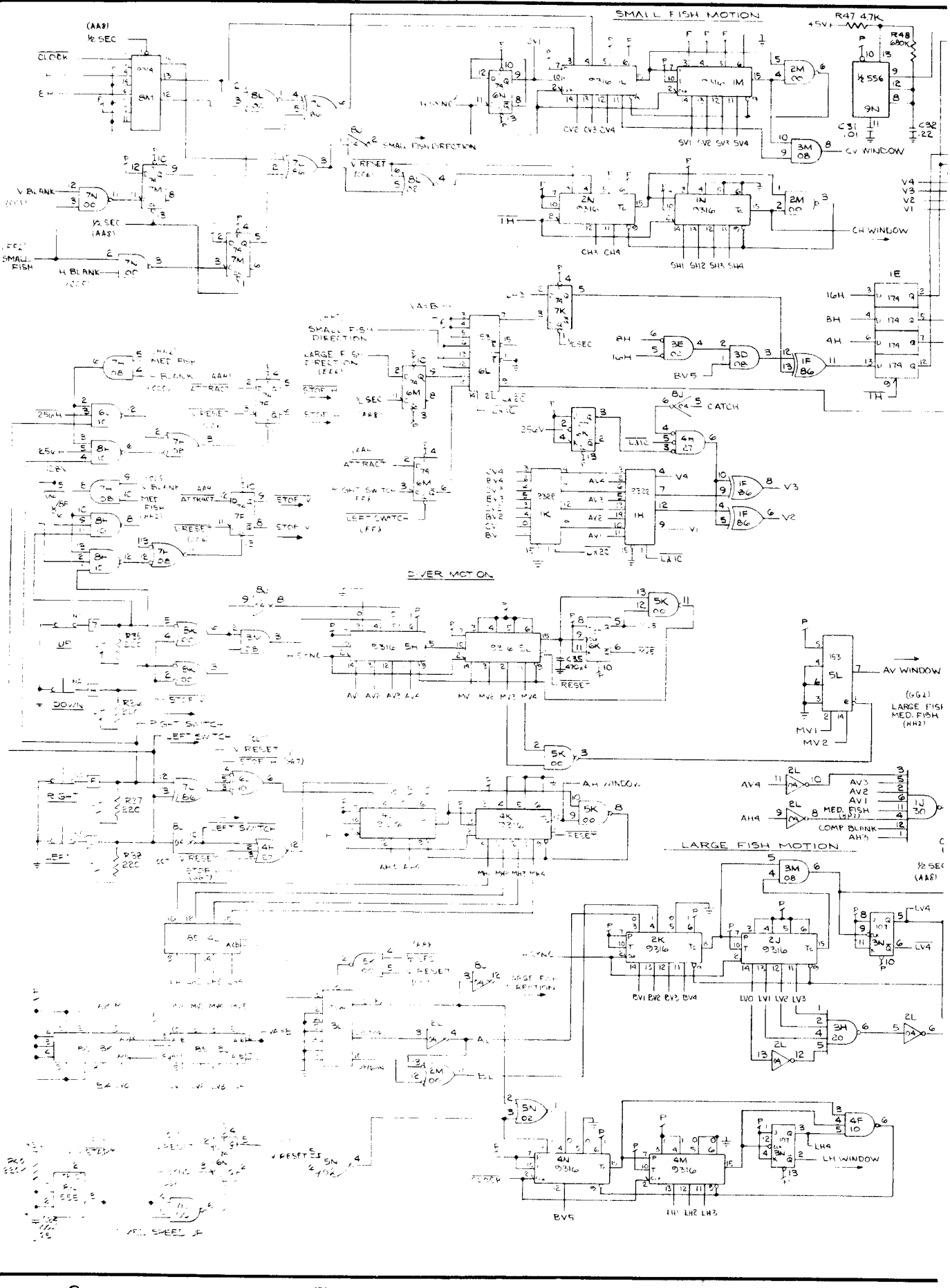
SMALL FISH MOTION
CLOCK
½ SEC
V BLANK
H BLANK
SMALL FISH
SMALL FISH DIRECTION
V RESET
H SYNC
CV WINDOW
CH WINDOW
R47 4.7K
R48 680K
+5V
LARGE FISH DIRECTION
MED FISH
ATTRACT
CATCH
DIVER MOTION
UP
DOWN
RIGHT SWITCH
LEFT SWITCH
AV WINDOW
AH WINDOW
MED. FISH
COMP BLANK
LARGE FISH MOTION
LH WINDOW
LARGE FISH
MED. FISH

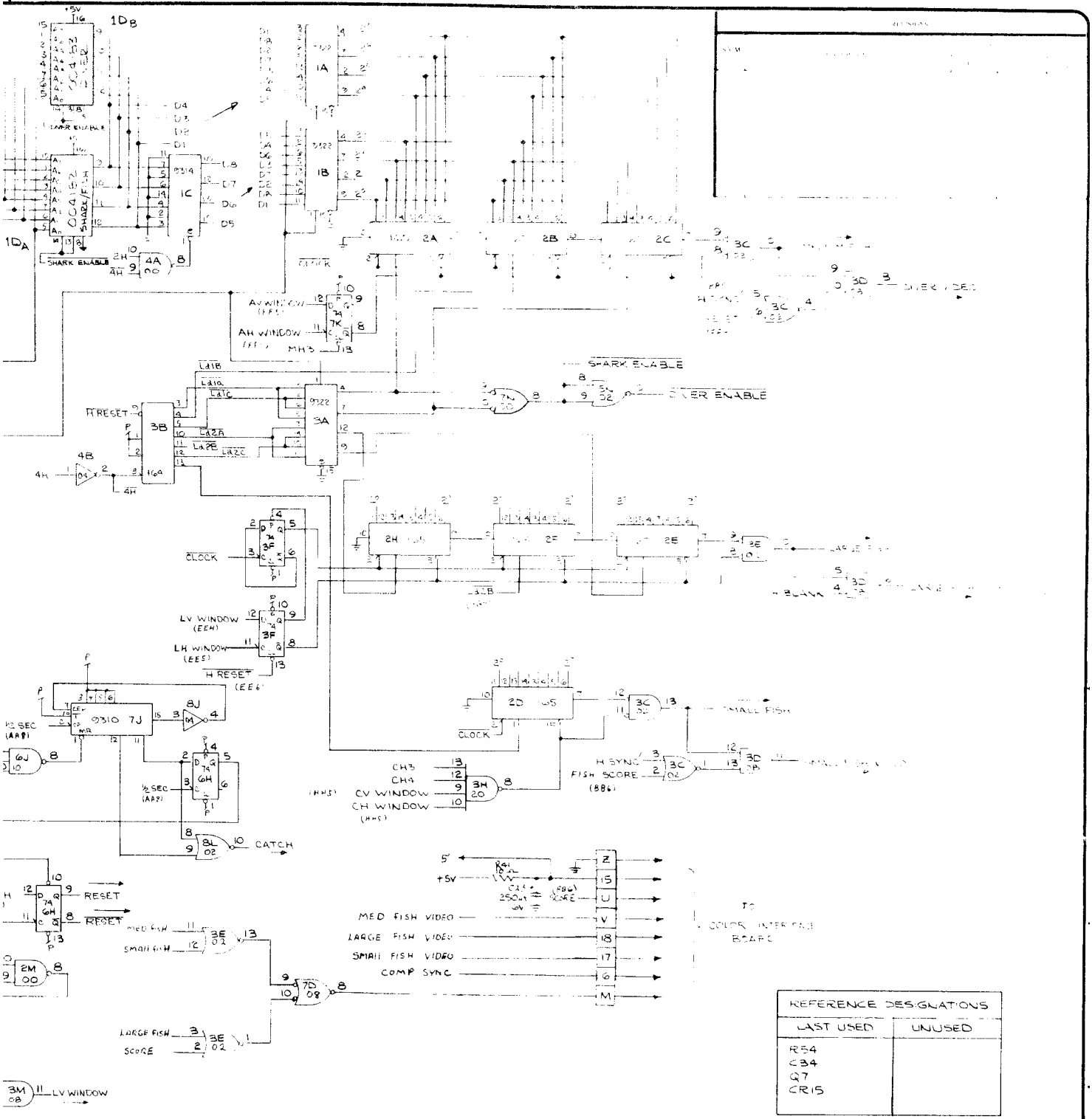

REFERENCE DESIGNATIONS	
LAST USED	UNUSED
R54	
C34	
Q7	
CR15	

INTERPRET THIS DRAWING PER USASEVI-1-5

UNLESS OTHERWISE SPECIFIED DIMENSIONS ARE IN INCHES TOLERANCES ON

FRACTIONS ±1/16
ANGLES ±1°
SURFACE FINISH ✓

MATERIAL

NEXT ASSY | USED ON

APPLICATION

DRAWN BY | DATE 9-10-74

CHECKED

DESIGN ENGINEER

DOCUMENT CONTROL

ATARI INCORPORATED

TITLE SCHEMATIC, JAWS P.C. BOARD

SIZE D | DRAWING NO. 003806 | B

SCALE | SHEET 2 OF 2

ASSEMBLY TITLE / **JAWS P.C.B. ASSEMBLY** **P/L** 003806

PARTS LIST SPECIFICATION Page 1 of 3

Drawn		
Checked	Mech. Eng.	
Proj. Eng.	Elec. Eng	REV. B

Rev.	Description	Date	Apprv.	Rev.	Description	Date	Apprv.
A	PROD REL						
B	REV PER ECN 1613						

Item	Part Number	Qty.	DESCRIPTION	
1	37-7400	5	I.C. 7400	
2	37-7402	5	I.C. 7402	
3	37-7404	5	I.C. 7404	
4	37-7408	4	I.C. 7408	
5	37-7410	4	I.C. 7410	
6	37-7420	2	I.C. 7420	
7	37-7427	1	I.C. 7427	
8	37-7430	2	I.C. 7430	
9	37-7448	1	I.C. 7448	
10	37-7474	13	I.C. 7474	
11	37-7485	3	I.C. 7485	
12	37-7486	2	I.C. 7486	
13	37-7490	2	I.C. 7490	
14	37-7493	5	I.C. 7493	
15	37-74107	3	I.C. 74107	
16	37-74153	2	I.C. 74153	
17	37-74164	1	I.C. 74164	
18	37-74165	7	I.C. 74165	
19	37-74174	1	I.C. 74174	
20	37-74195	1	I.C. 74195	
21				
22	37-9310	1	I.C. 9310	
23	37-9312	2	I.C. 9312	
24	37-9314	3	I.C. 9314	
25	37-9316	12	I.C. 9316	
26	37-9322	6	I.C. 9322	
27	37-555	1	I.C. 555	
28	37-556	3	I.C. 556	
29	37-741	1	I.C. 741	
30	37-747	1	I.C. 747	
31	37-LM380	1	I.C. LM380	
32	37-LM309	1	Regulator LM309	
33	10-52P7	1	Res. Car. 2.7 ohm ¼W 5%	R26
34	10-5100	1	Res. Car. 10 ohm ¼W 5%	R41
35	10-5101	4	Res. Car 100 ohm ¼W 5%	R12, R29, R30, R31
36	10-5221	7	Res. Car. 220 ohm ¼W 5%	R43, R27, R28, R35, R36, R37, R38
37	10-5271	1	Res. Car. 270 ohm ¼W 5%	R18

Item	Part Number	Qty.	DESCRIPTION	
38	10-5331	7	Res. Car. 330 ohm ¼W 5%	R1, R2, R4, R5, R6, R7, R32
39	10-5471	2	Res. Car. 470 ohm ¼W 5%	R13, R44
40	10-5102	13	Res. Car. 1K ohm ¼W 5%	R14, R16, R25, R55, R56, R57, R58, R60, R61, R62, R63, R64, R65
41	10-5152	1	Res. Car. 1.5K ohm ¼W 5%	R3
42	10-5182	1	Res. Car. 1.8K ohm ¼W 5%	R11
43	10-5222	2	Res. Car. 2.2K ohm ¼W 5%	R21, R42
44	10-5272	2	Res. Car. 2.7K ohm ¼W 5%	R19, R20
45	10-5472	3	Res. Car. 4.7K ohm ¼W 5%	R45, R47, R51
46	10-5682	1	Res. Car. 6.8K ohm ¼W 5%	R52
47	10-5822	1	Res. Car. 8.2K ohm ¼W 5%	R15
48	10-5103	3	Res. Car. 10K ohm ¼W 5%	R17, R22, R49
49	10-5153	1	Res. Car. 15K ohm ¼W 5%	R10
50	10-5223	1	Res. Car. 22K ohm ¼W 5%	R53
51	10-5224	1	Res. Car. 220K ohm ¼W 5%	R40
52	10-5474	4	Res. Car. 470K ohm ¼W 5%	R8, R9, R46, R50
53	10-5684	1	Res. Car. 680K ohm ¼W 5%	R48
54	11-5821	1	Res. Car. 820 ohm ½ W 5%	R34
55	19-809c4P0	1	Res. Car. 4 ohm 10W 10%	R33
56	19-311103	1	Trimpot, P.C. Mount 10K ohm	R24
57	19-311503	1	Trimpot, P.C. Mount 50K ohm	R54
58	19-311105	1	Trimpot, P.C. Mount 1meg ohm	R39
59	28-101101	1	Cap. Mica 100pf 100V	C1
60	28-101471	1	Cap. Mica 470pf 100V	C35
61	27-120103	2	Cap. Cer. .01mfd 12V	C29, C31
62	27-120104	16	Cap. Cer. .1mfd 12V	C2, C10, C12, C16, C17, C25, C33, C36, C37, C38, C39, C40, C41, C42, C43, C44
63	27-101104	5	Cap. Mylar .1mfd 100V	C6, C7, C8, C9, C27
64	21-101224	1	Cap. Mylar .22mfd 100V	C32
65	24-250105	2	Cap. Elec. 1mfd 25V	C4, C26
66	24-250106	5	Cap. Elec. 10mfd 25V	C11, C14, C15, C19, C22
67	24-250226	3	Cap. Elec. 22mfd 25V	C3, C28, C34
68	24-250107	2	Cap. Elec. 100mfd 25V	C24, C30
69	24-060257	1	Cap. Elec. 250mfd 6V	C23
70	24-250227	3	Cap. Elec. 220mfd 25V	C5, C13, C20
71	24-250228	1	Cap. Elec. 2200mfd 25V	C21
72	24-160808	1	Cap. Elec. 8000mfd 16V	C18
73	31-1N914	8	Diode, 1N914	CR1, CR2, CR3, CR11, CR12, CR13, CR14, CR15
74	31-1N4001	4	Diode, 1N4001	CR6, CR7, CR8, CR9
75	31-A14U	2	Diode, A14U	CR4, CR5
76	32-1N752A	1	Diode, Zener, In752A	CR10
77	34-2N3643	5	Transistor, 2N3643	Q2, Q3, Q4, Q6, Q7
78	33-2N3644	2	Transistor, 2N3644	Q1, Q5
79	90-101	1	Crystal 14.31818	Y1
80	69-001	1	Switch, DPDT, Slide	S1
81	003807	1	P.C.B. Fabrication	
82	004182	1	Shark & Fish P-Rom	

Item	Part Number	Qty.	DESCRIPTION
83	004183	1	Diver P-Rom
84	78-06001	1	Heatsink
85	72-1610C	2	Screw, Pn Hd, Phil, 6-32 x 5/8" Stainless
86	75-916	2	Nut, Hex, 6-32
87	75-056	2	Lockwasher, #6
88	78-16005	1	Sil - Pad
89	79-42216	2	I.C. Socket, 16 Pin

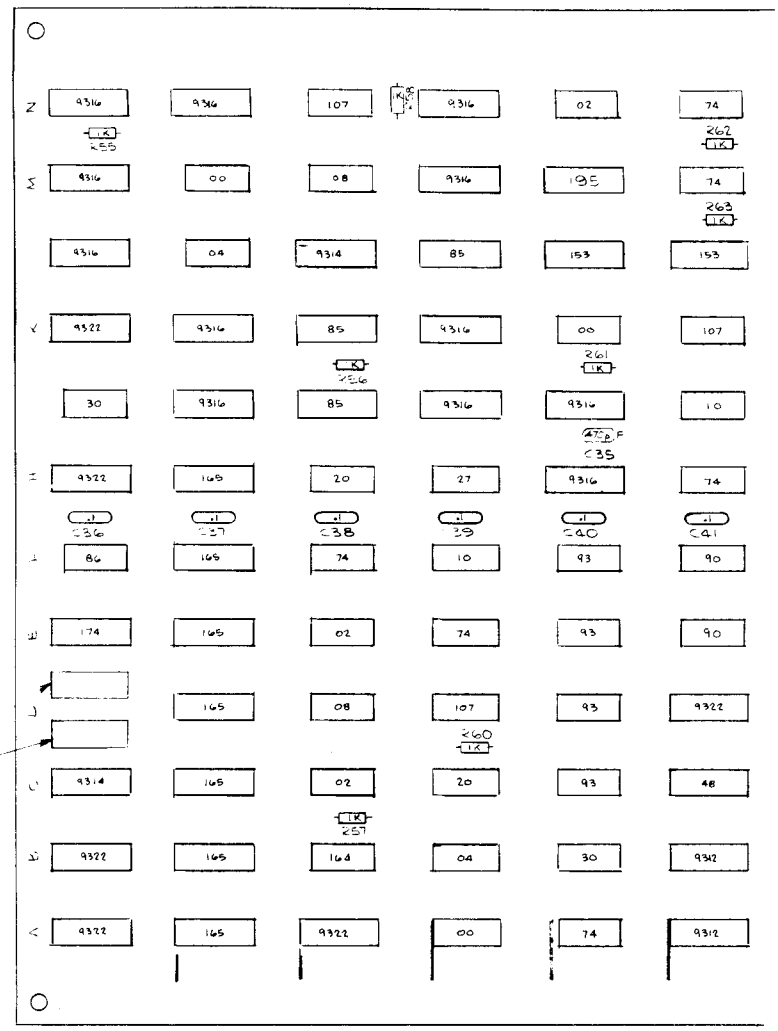

4183
4182

1. BLACK BAR ON DIODE INDICATES CATHODE END

NOTES_UNLESS OTHERWISE SPECIFIED:

REVISIONS		DWG NO			
REV	DESCRIPTION	EO/ECN	DATE	BY/CHK	APPD
	[illegible] RELEASE		[illegible]	[illegible]	
	REVISED PER ECN [illegible]		[illegible]	[illegible]	

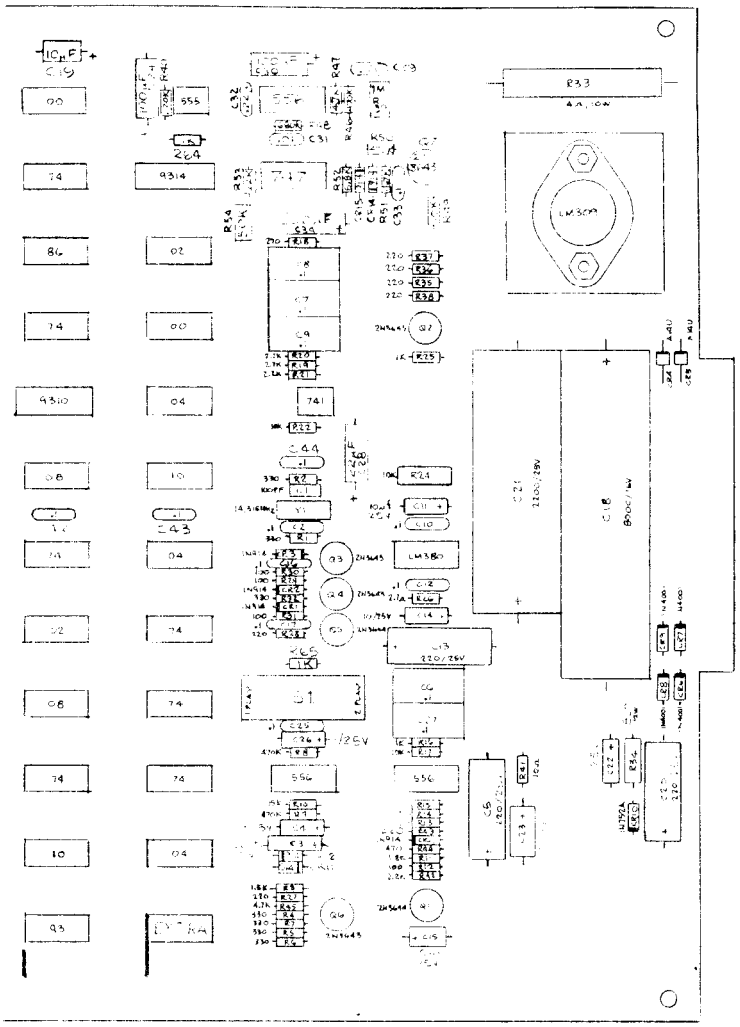

			UNLESS OTHERWISE SPECIFIED	ITEM	REF DES	DESCRIPTION	PART NUMBER	QTY
			XX DEC	LIST OF MATERIAL				
			XXX DEC	DR	DATE			
			ANGULAR	CHK				
			BREAK SHARP	ENGR		TITLE ASSEMBLY,		
			FLAT WITHIN	PROJ		JAMES P.C. BOARD		
			CONT WITHIN	MFG				
			SURFACE FINISH ✓	FINISH		SIZE D	DWG NO. [illegible]	REV. B
VERS	NEXT ASSY	MODEL	ALL DIM IN INCHES DO NOT SCALE DWG	MAT'L		SCALE	SHT OF	

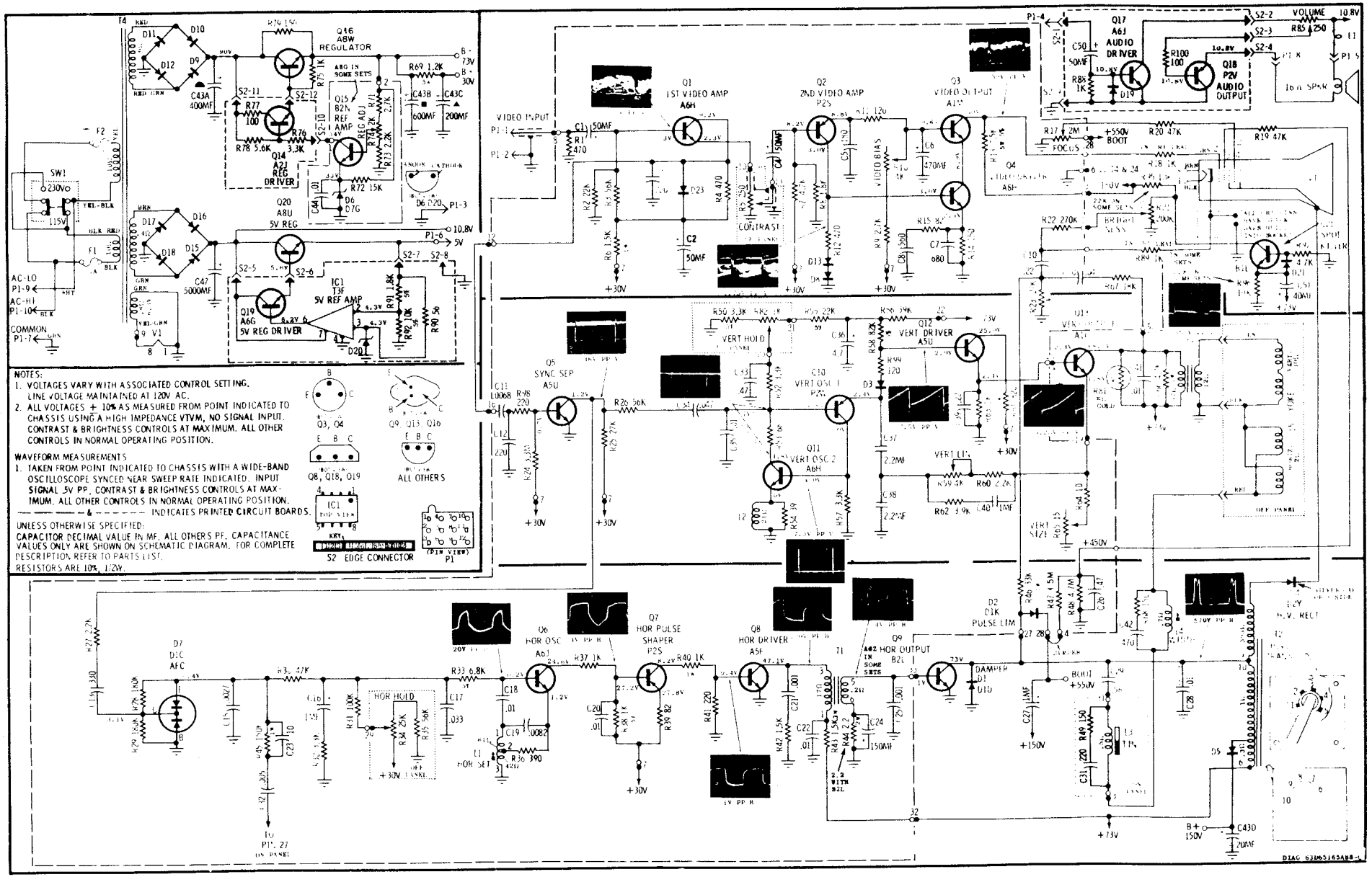

Schematic, Motorola XM501/XM701 Monitor