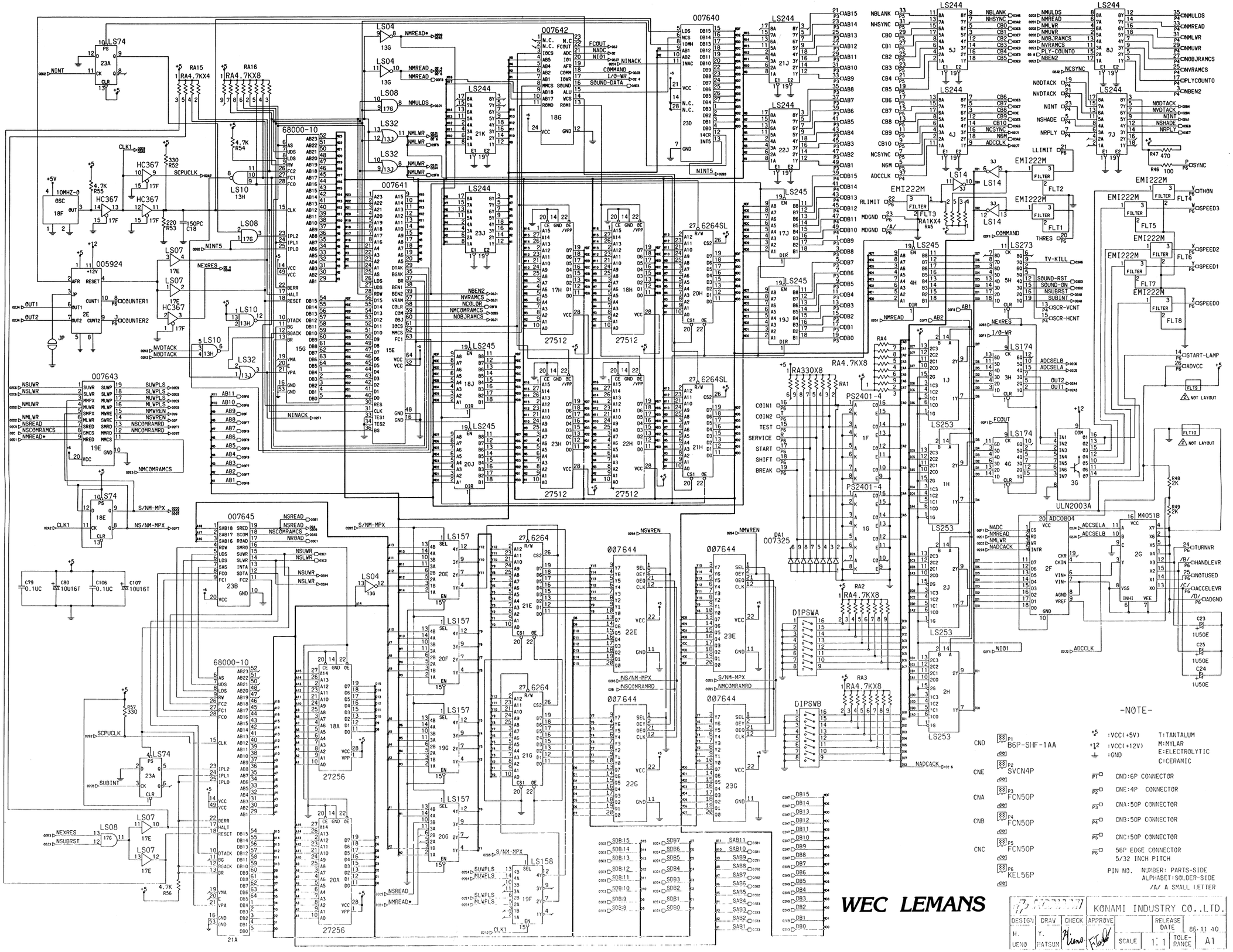
007642
007640
68000-10
007641
005924
007643
007645
007644
27512
27256
27_6264
27_6264SL
RA4.7KX4
RA4.7KX8
RA330X8
PS2401-4
DIPSWA
DIPSWB
DA1
007325
ULN2003A
ADC0804
M4051B
EMI222M
-NOTE-
:VCC(+5V)
:VCC(+12V)
:GND
T:TANTALUM
M:MYLAR
E:ELECTROLYTIC
C:CERAMIC
CND P1 B6P-SHF-1AA
CNE P2 SVCN4P
CNA P3 FCN50P
CNB P4 FCN50P
CNC P5 FCN50P
P6 KEL56P
CND:6P CONNECTOR
CNE:4P CONNECTOR
CNA:50P CONNECTOR
CNB:50P CONNECTOR
CNC:50P CONNECTOR
56P EDGE CONNECTOR
5/32 INCH PITCH
PIN NO. NUMBER: PARTS-SIDE
ALPHABET:SOLDER-SIDE
/A/ A SMALL LETTER
WEC LEMANS
KONAMI INDUSTRY CO.,LTD.
DESIGN H. UENO
DRAW Y. MATSUMI
CHECK
APPROVE
RELEASE DATE 86.11.10
SCALE 1:1
TOLERANCE
A1

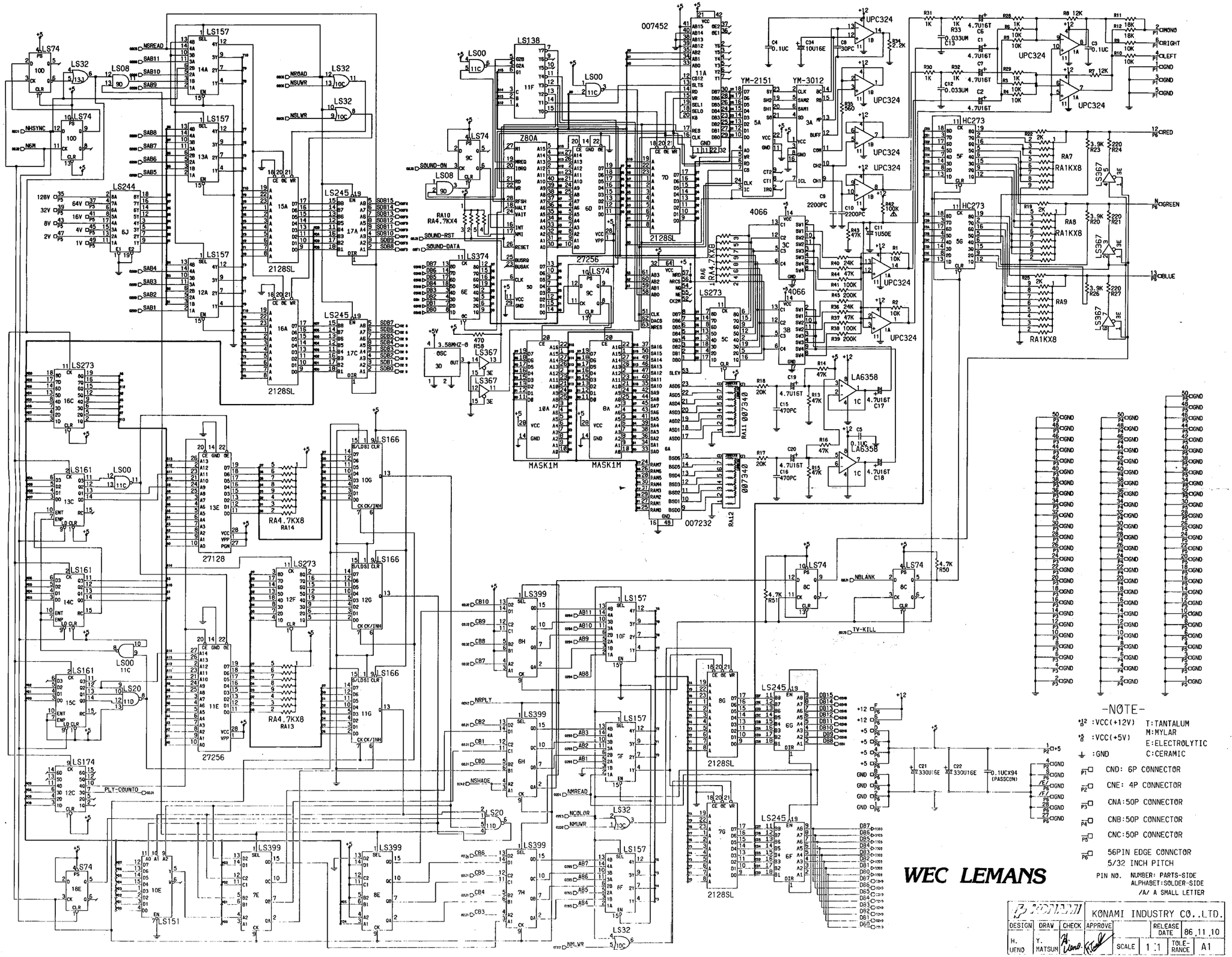
LS74
LS32
LS08
LS157
LS244
LS245
LS273
LS161
LS166
LS174
LS367
LS138
LS374
LS00
LS20
LS151
LS399
LS157
LS32
LS74
Z80A
2128SL
27128
27256
MASK1M
YM-2151
YM-3012
UPC324
HC273
RA7
RA8
RA9
RA1KX8
LA6358
4066
007452
007232
007340
RA11
RA12
RA14
RA13
RA4.7KX8
RA4.7KX4
RA6
3.58MHZ-B
NHSYNC
NGM
SOUND-ON
SOUND-RST
SOUND-DATA
NRDAD
NSUWR
NS1WR
NRPLY
NSHADE
NMREAD
NCOLOR
NMUWR
NML WR
PLY-COUNTO
NBLANK
TV-KILL
CMONO
CRIGHT
CLEFT
CGND
CRED
CGREEN
CBLUE
DGND
-NOTE-
+12 :VCC(+12V)
+5 :VCC(+5V)
:GND
T:TANTALUM
M:MYLAR
E:ELECTROLYTIC
C:CERAMIC
CND: 6P CONNECTOR
CNE: 4P CONNECTOR
CNA:50P CONNECTOR
CNB:50P CONNECTOR
CNC:50P CONNECTOR
56PIN EDGE CONNCTOR
5/32 INCH PITCH
PIN NO. NUMBER: PARTS-SIDE
ALPHABET:SOLDER-SIDE
/A/ A SMALL LETTER
WEC LEMANS
KONAMI INDUSTRY CO.,LTD.
DESIGN
DRAW
CHECK
APPROVE
RELEASE DATE
86.11.10
H. UENO
Y. MATSUN
SCALE
1:1
TOLERANCE
A1