Table of Contents

NOTE: This staple temporarily holds the schematic package together. Remove the staple before using these schematics.

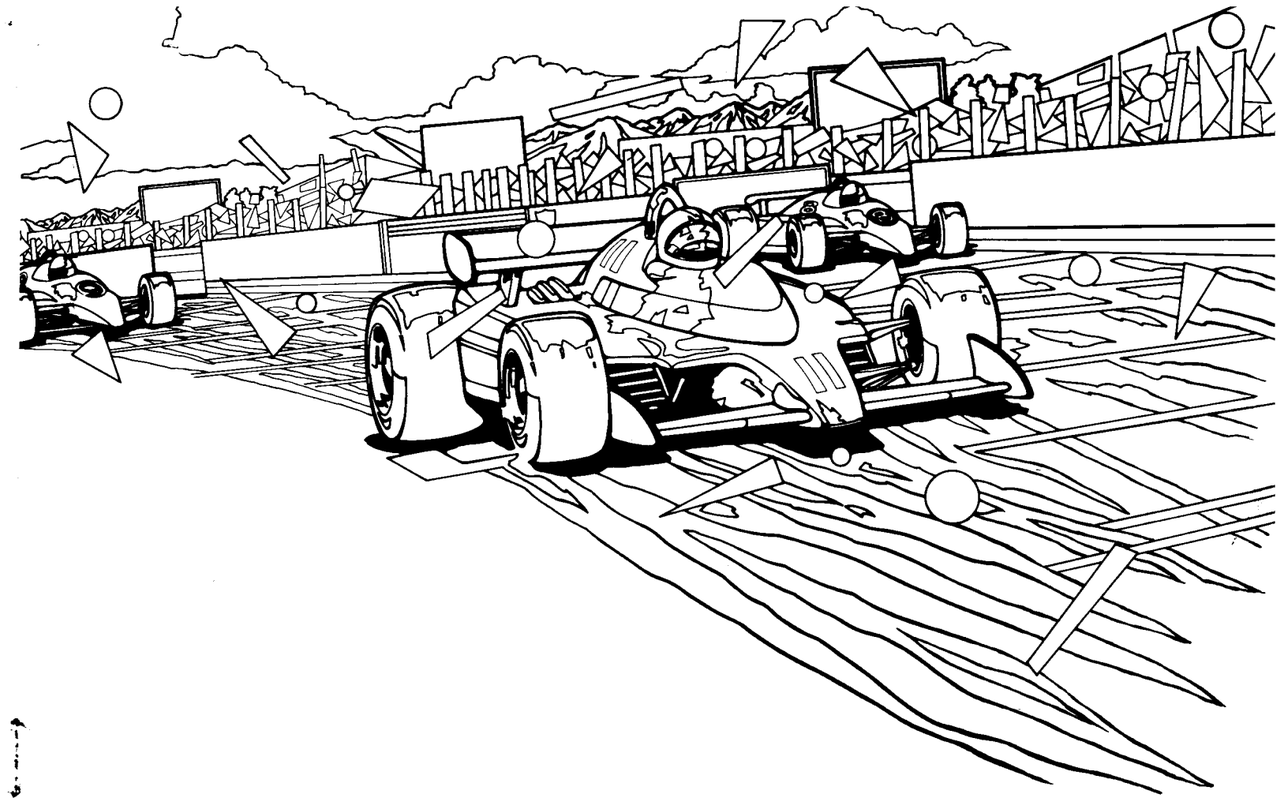

Schematic Package Supplement to

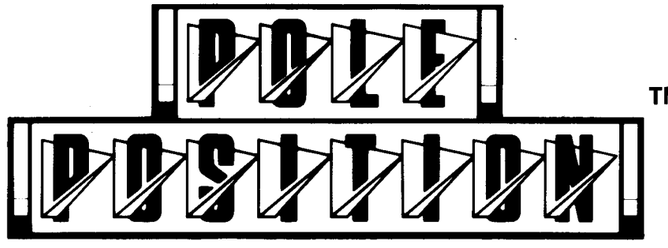

TM*

Operation, Maintenance, and Service Manual

*Pole Position is engineered and designed by Namco Ltd. Manufactured under license by Atari, Inc.

2M

SP-218 Sheet 1A
5th printing

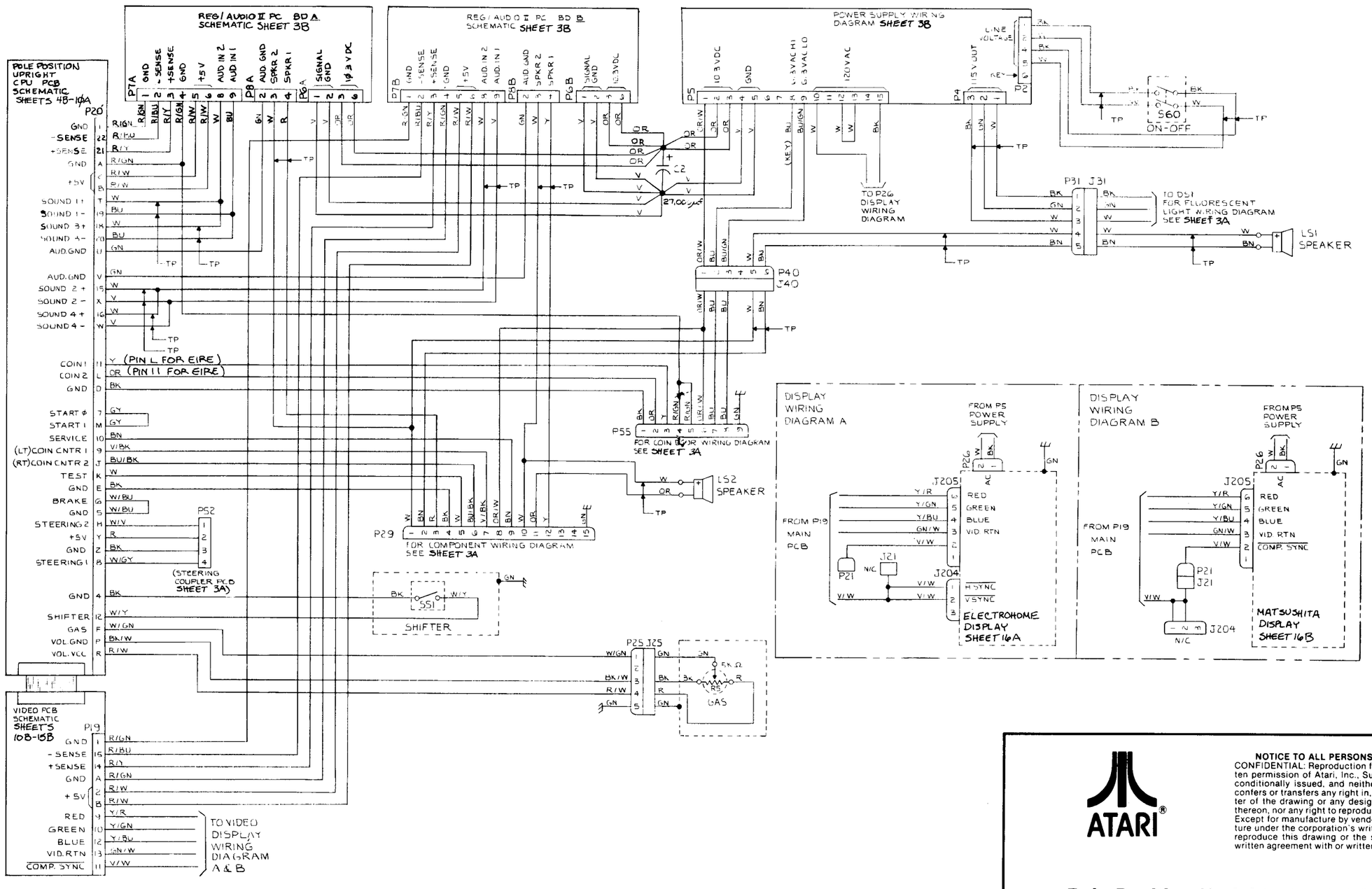

ATARI®

Pole Position Upright Main Wiring Diagram

A Warner Communications Company

SP-218 Sheet 1B
5th printing

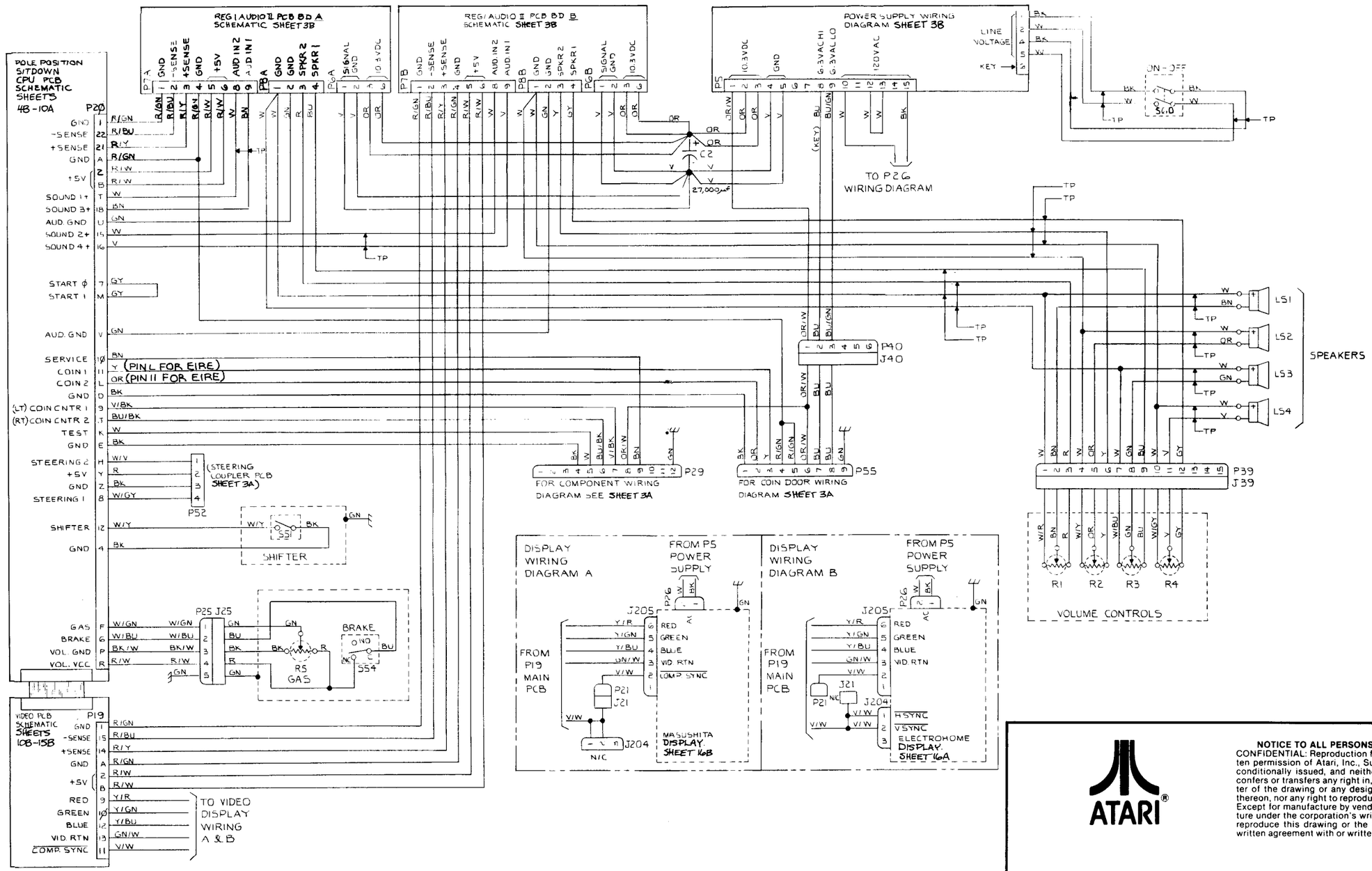

ATARI®

NOTICE TO ALL PERSONS RECEIVING THIS DRAWING
CONFIDENTIAL: Reproduction forbidden without the specific written permission of Atari, Inc., Sunnyvale, CA. This drawing is only conditionally issued, and neither receipt nor possession thereof confers or transfers any right in, or license to use, the subject matter of the drawing or any design or technical information shown thereon, nor any right to reproduce this drawing or any part thereof. Except for manufacture by vendors of Atari, Inc., and for manufacture under the corporation's written license, no right is granted to reproduce this drawing or the subject matter thereof, unless by written agreement with or written permission from the corporation.

Pole Position Sit-Down Main Wiring Diagram

A Warner Communications Company

SP-218 Sheet 2A
5th printing

EMI Shield PCB Wiring Diagram

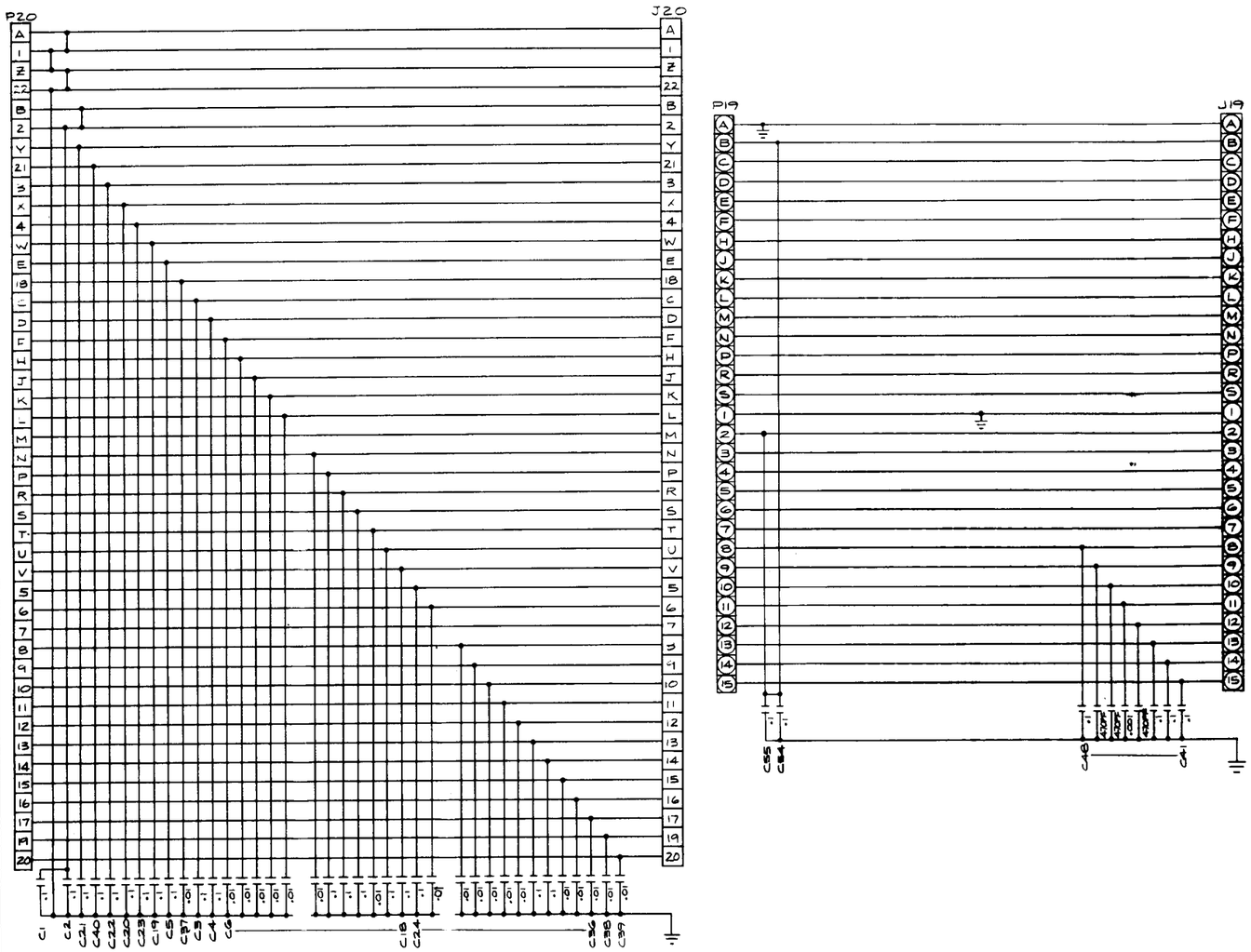

EMI End PCB Wiring Diagram

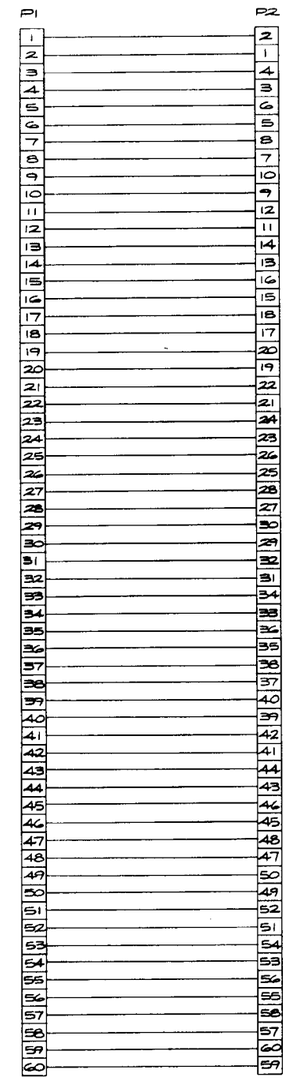

Coin Option Interconnect Wiring Diagram

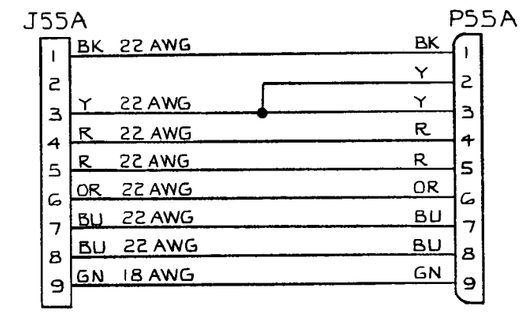

ATARI®

Pole Position Game Wiring Interfaces

A Warner Communications Company

SP-218 Sheet 2B
5th printing

Upright Utility-Panel Wiring Diagram

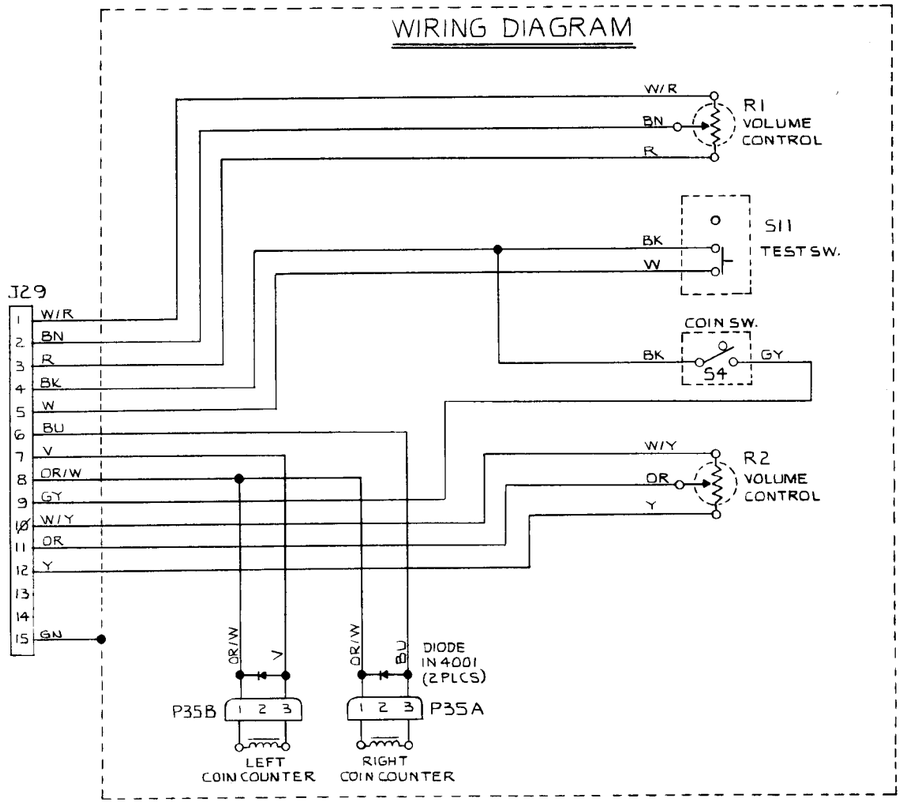

Coin-Door Wiring Diagram

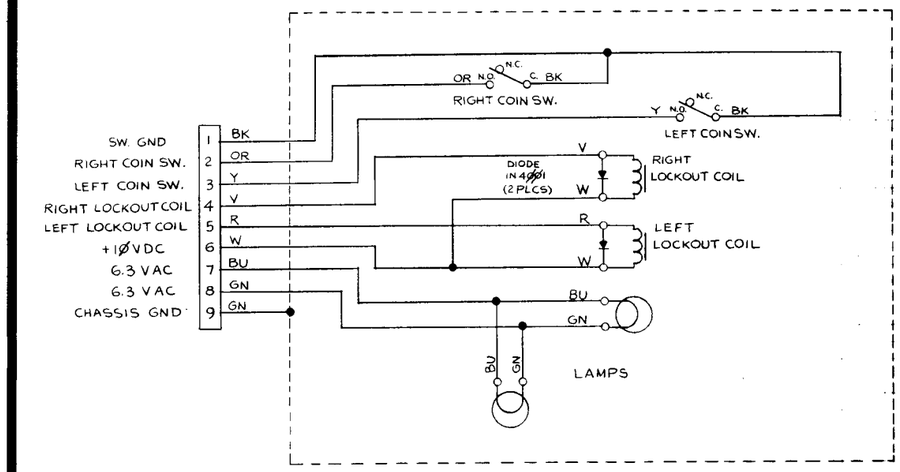

Upright-Only Fluorescent Light Wiring Diagram

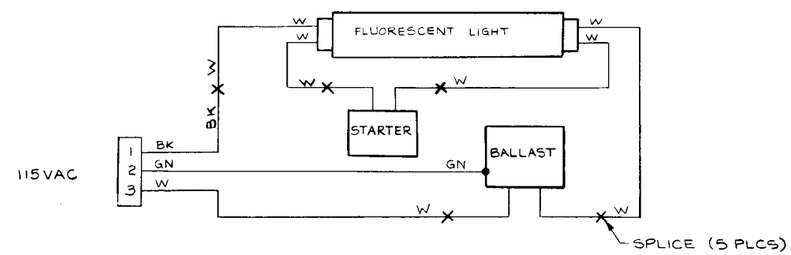

Sit-Down Utility-Panel Wiring Diagram

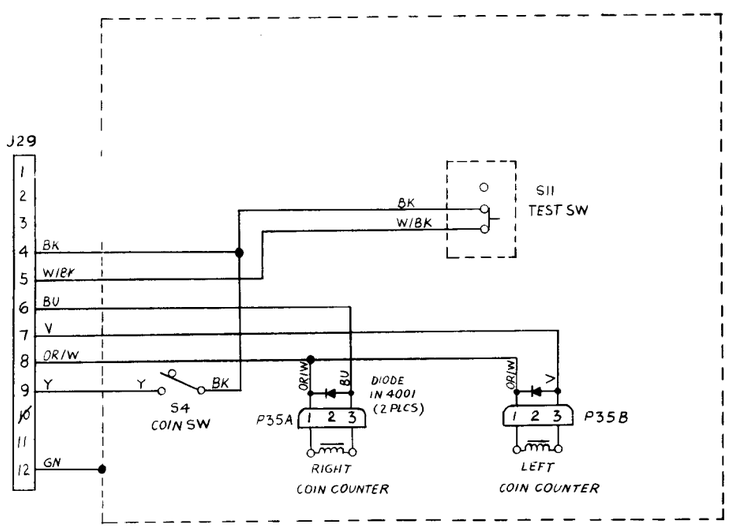

Steering Coupler PCB Schematic

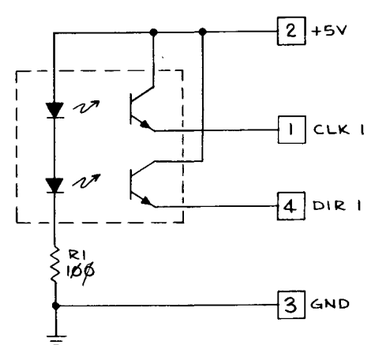

ATARI®

Pole Position Game Wiring Interfaces

A Warner Communications Company

SP-218 Sheet 3A
5th printing

Regulator/Audio II PCB Schematic Diagram

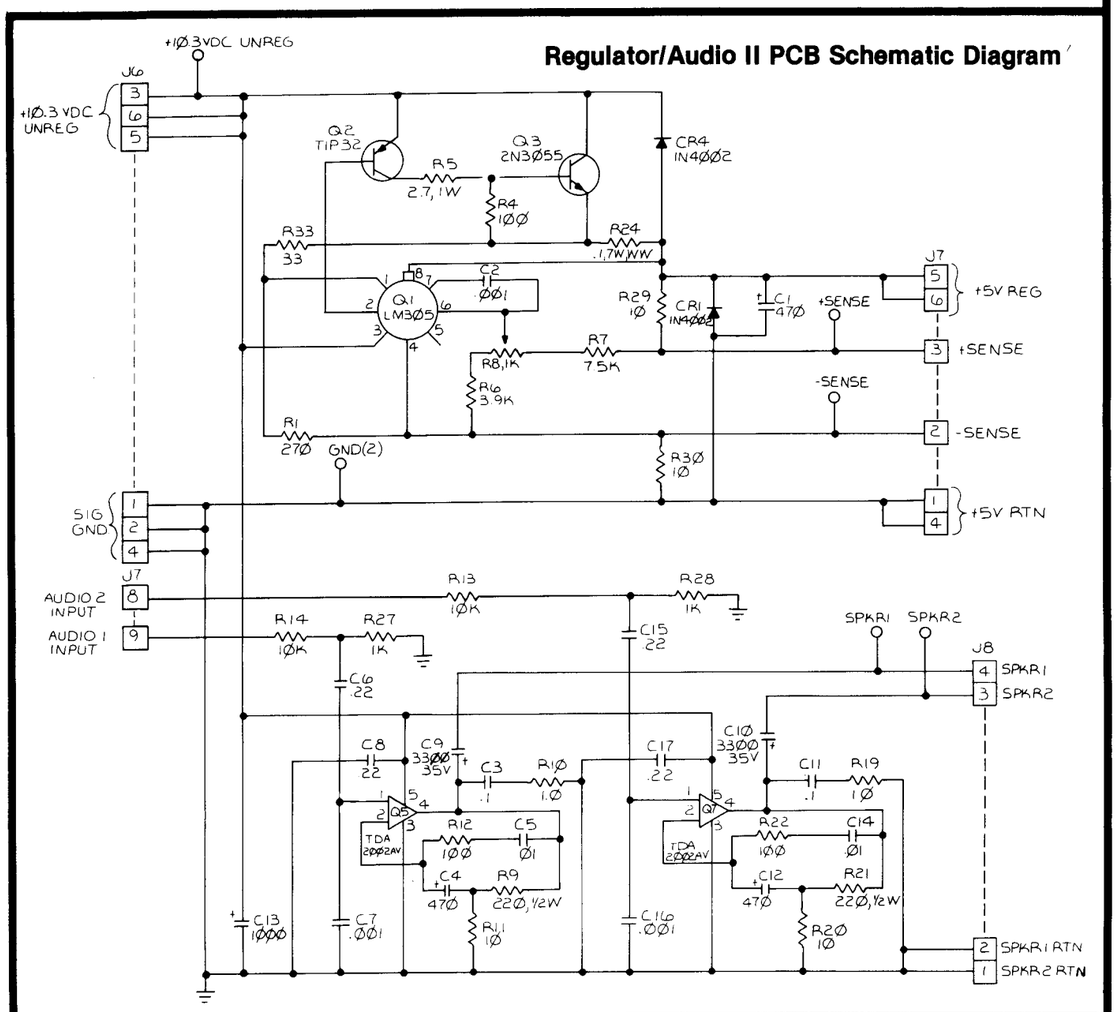

Color Raster Power Supply Wiring Diagram

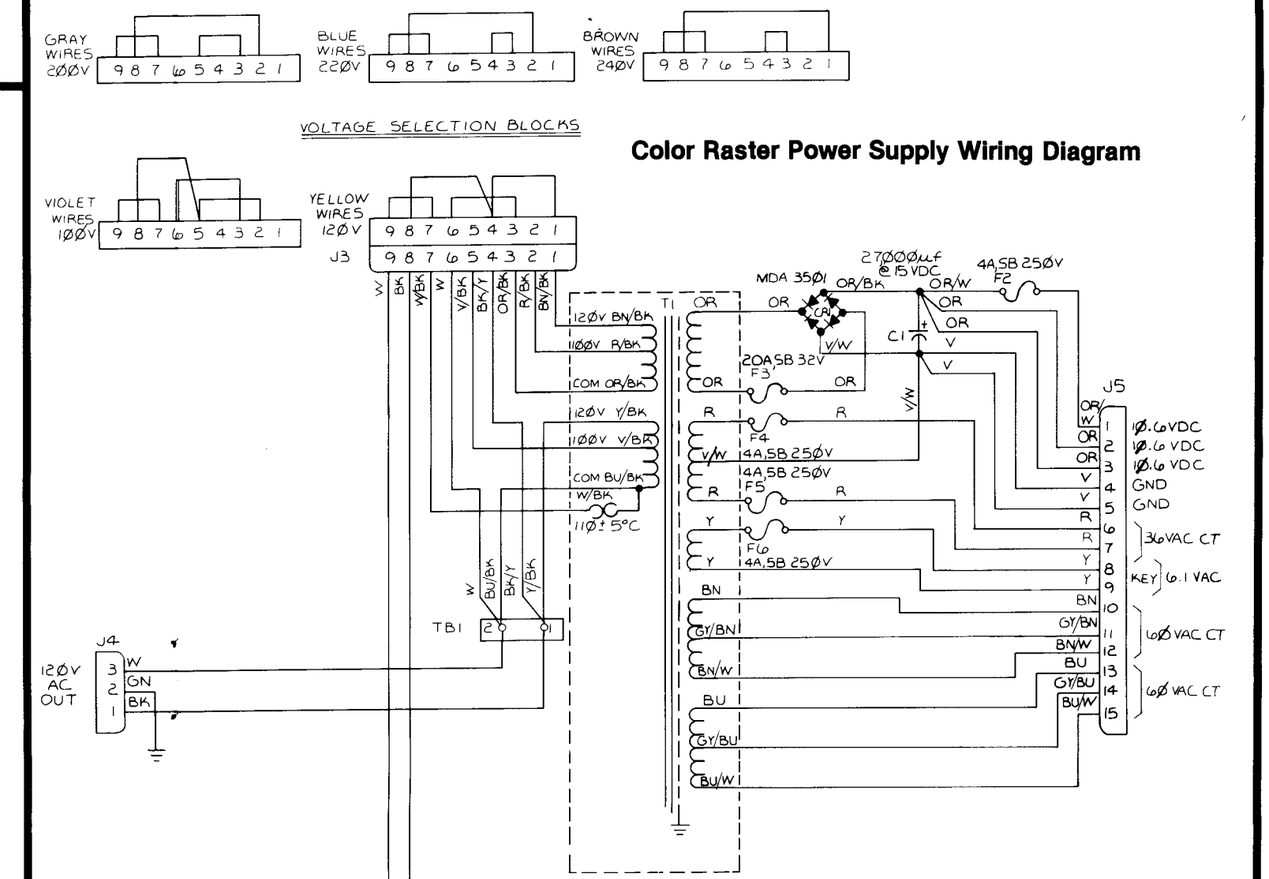

NOTES:

1. POWER CORD ASSY. MAY HAVE WIRE COLORS AS SHOWN OR WIRE COLORS AS FOLLOWS: ONE BLACK WIRE (AC), ONE GREEN WIRE GND AND ONE WHITE WIRE (NEUTRAL).
2. USE 4AMP, SB 250V FUSE AT F1 WITH 220V & 240V (EUROPEAN ONLY)

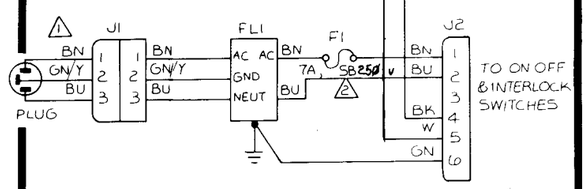

ATARI®

Pole Position Reg./Audio II PCB and Power Supply Diagrams

A Warner Communications Company

SP-218 Sheet 3B
5th printing

MEMORY MAP

CPU 1 AND 2

HEXADECIMAL ADDRESS	READ/ WRITE	FUNCTION
0000-37FFF	R	Program Memory
4000-7FFF	R	Program Memory
8000-8FFF (8700-87FF) (8F00-8FFF)	R/W	Motion Object Memory Vertical and Horizontal Position Character, Color, Vertical Size, Horizontal Size
9000-97FF (9000-93FF) (9700-97FF	R/W	Road Memory Character Horizontal Scroll
9800-9FFF	R/W	Alphanumeric Memory
A000-AFFF)	R/W	View Character Memory
C000	W	View Horizontal Position
C100	W	Road Vertical Position

CPU 3

HEXADECIMAL ADDRESS	READ/ WRITE	FUNCTION
0000-1FFF	R	Program Memory
2000-2FFF	R	Program Memory
3000-37FF	R/W	Battery Back-Up RAM
4000-43FF (4380-43FF)	R/W	Motion Object Memory Vertical and Horizontal Position
4400-47FF (4780-47FF)	R/W	Motion Object Memory Character, Color, Vertical Size, Horizontal Size
4800-48FF (4800-49FF) (4B80-4BFF	R/W	Road Memory Character Horizontal Scroll
4C00-57FF (4C00-4FFF) (5000-53FF)	R/W	Alphanumeric Memory Alphanumeric View Character
8000-83FF (83C0-83FF)	R/W	Sound Memory Sound
9000	R/W	4-Bit CPU Controller
A000	R/W	Input/Output
A000	W R	IRQ Enable (1 = enable, 0 = disable) Bit 0: Not Used Bit 1: 128 V Bit 2: Power-Line Sense Bit 3: ADC End Flag
A001	W	4-Bit CPU Enable
A002	W	Sound Enable
A003	W	ADC Input Select
A004	W	CPU 1 Enable
A005	W	CPU 2 Enable
A006	W	Start Switch
S007	W	Color Enable
A100	W	Watchdog Reset
A200	W	Car Sound (Lower Nybble)
A300	W	Car Sound (Upper Nybble)

Schematic Reference Designators and Symbols

Logic symbols depict the logic function performed by that particular device and may differ from the manufacturer's data.

REFERENCE DESIGNATORS:

C	Capacitor
CR	Diode, signal or rectifier
F	Fuse
J	Connector
L	Inductor, fixed or variable
LS	Speaker
P	Connector
Q	Transistor or silicon-controlled rectifier
R	Resistor, fixed or variable
S	Switch
T	Transformer
TP	Twisted wire pair
VR	Voltage regulator
Y	Crystal

WIRE COLORS:

R	Red
GN	Green
Y	Yellow
W	White
BU	Blue
BN	Brown
BK	Black
OR	Orange
V	Violet
GY	Gray

Electrical components shown on the schematic diagrams are in the following units unless otherwise noted:

Capacitors = microfarads (μf)
Resistors = ohms (Ω)
Inductors = microhenrys (μh)

SYMBOLS:

Ground Test Point PCB edge connector pad

ATARI®

Pole Position Memory Map and Schematic Notes

A Warner Communications Company

SP-218 Sheet 4A
5th printing

CPU PCB Edge Connector

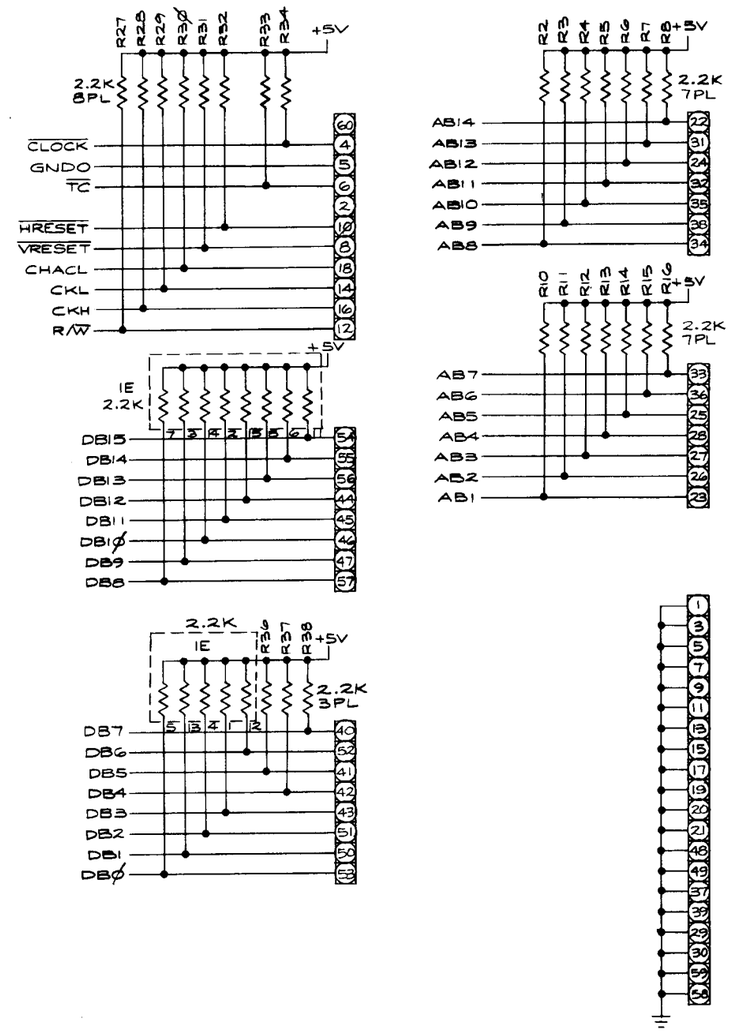

CPU PCB Power Input

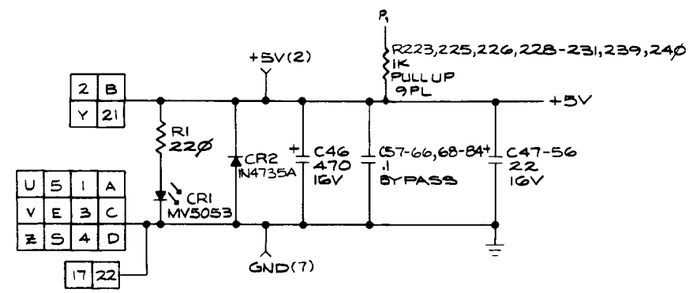

RAM Battery Back-Up Power

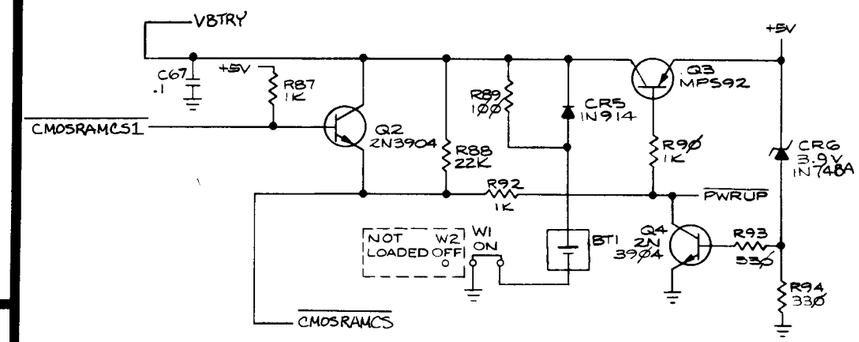

Pole Position CPU PCB Schematic Diagram

SP-218 Sheet 4B
5th printing

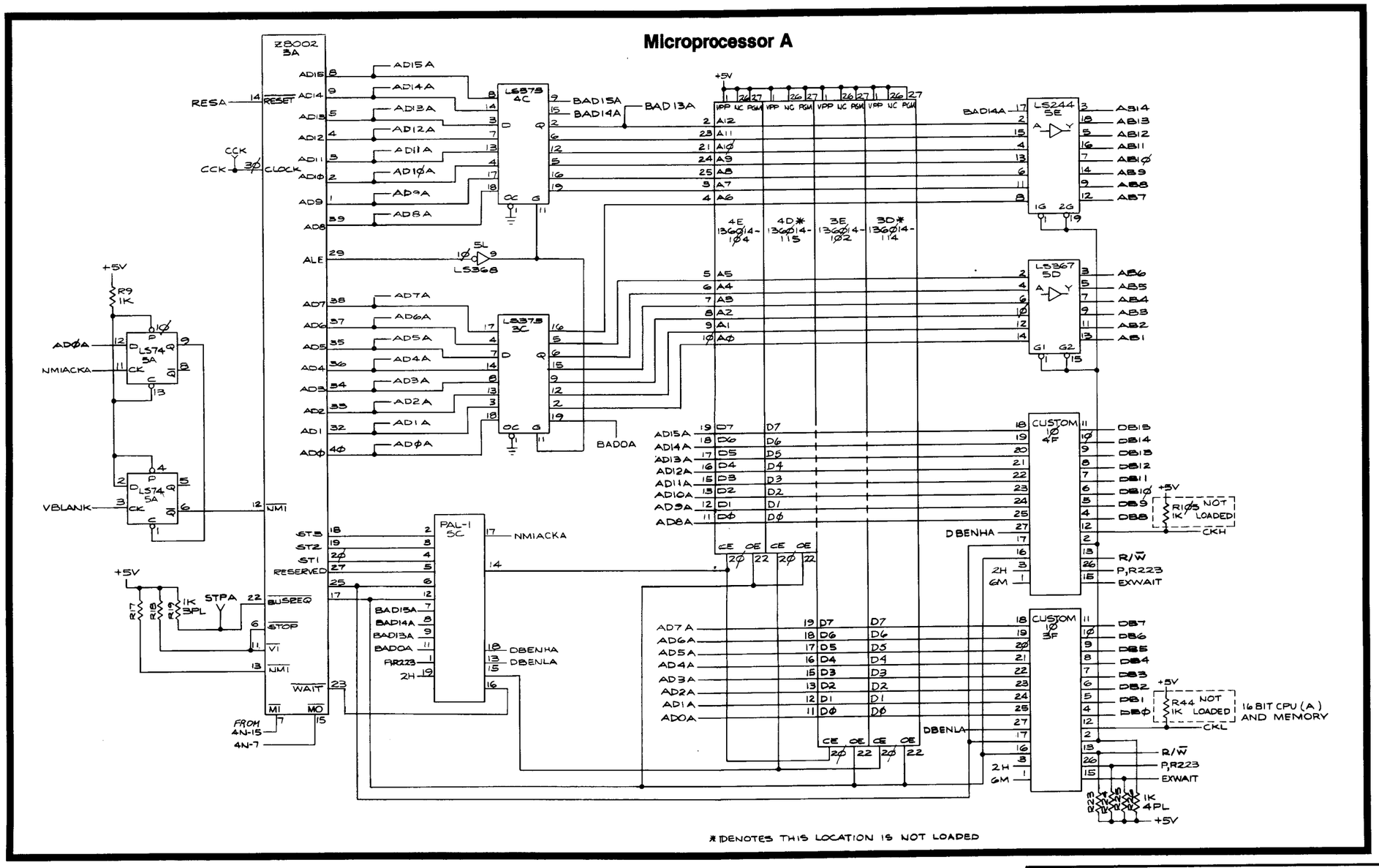

ATARI®

Pole Position CPU PCB Schematic Diagram

A Warner Communications Company

SP-218 Sheet 5A
5th printing

Microprocessor B

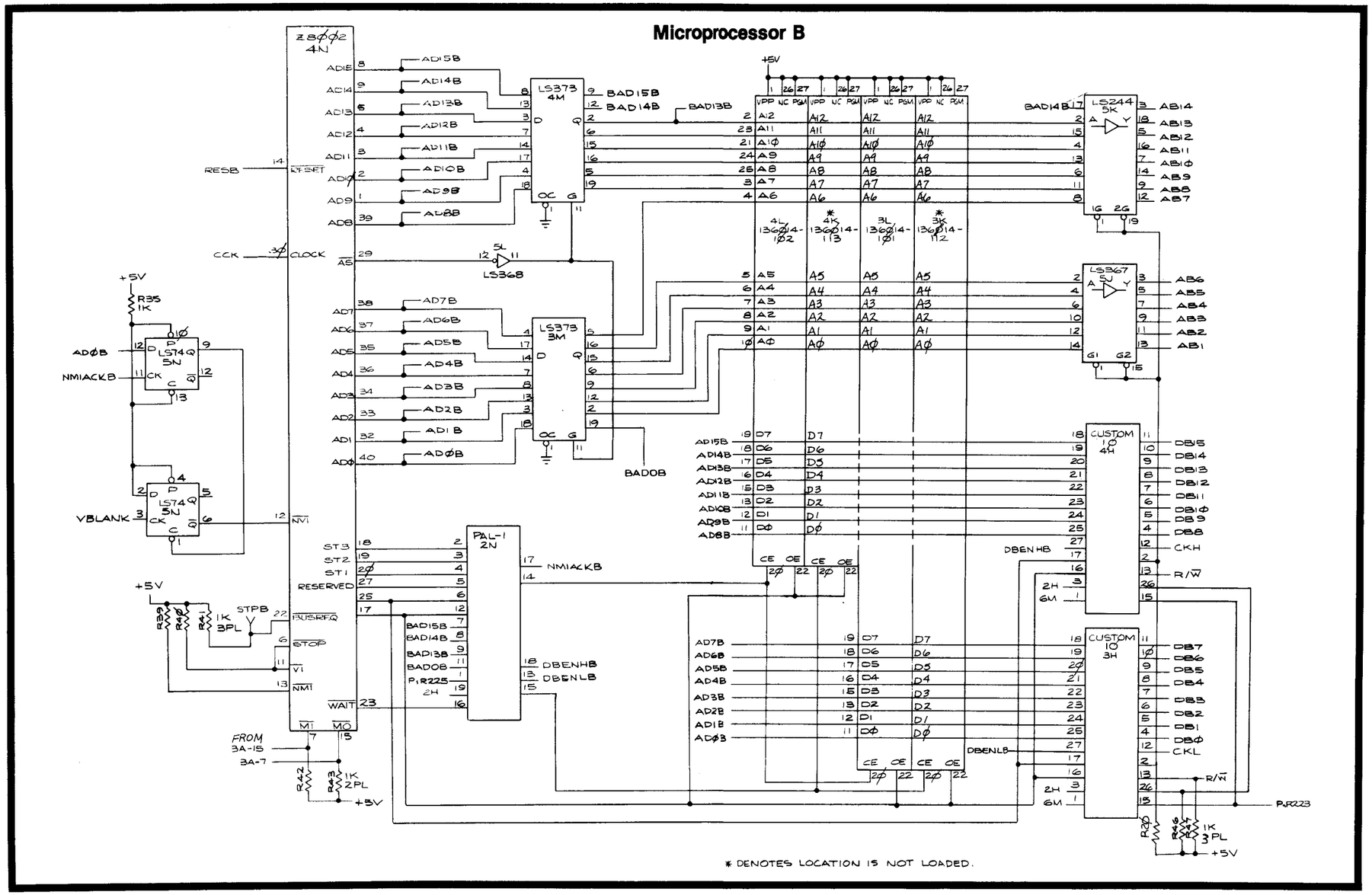

Pole Position CPU PCB Schematic Diagram

A Warner Communications Company

SP-218 Sheet 5B
5th printing

Sound Microprocessor

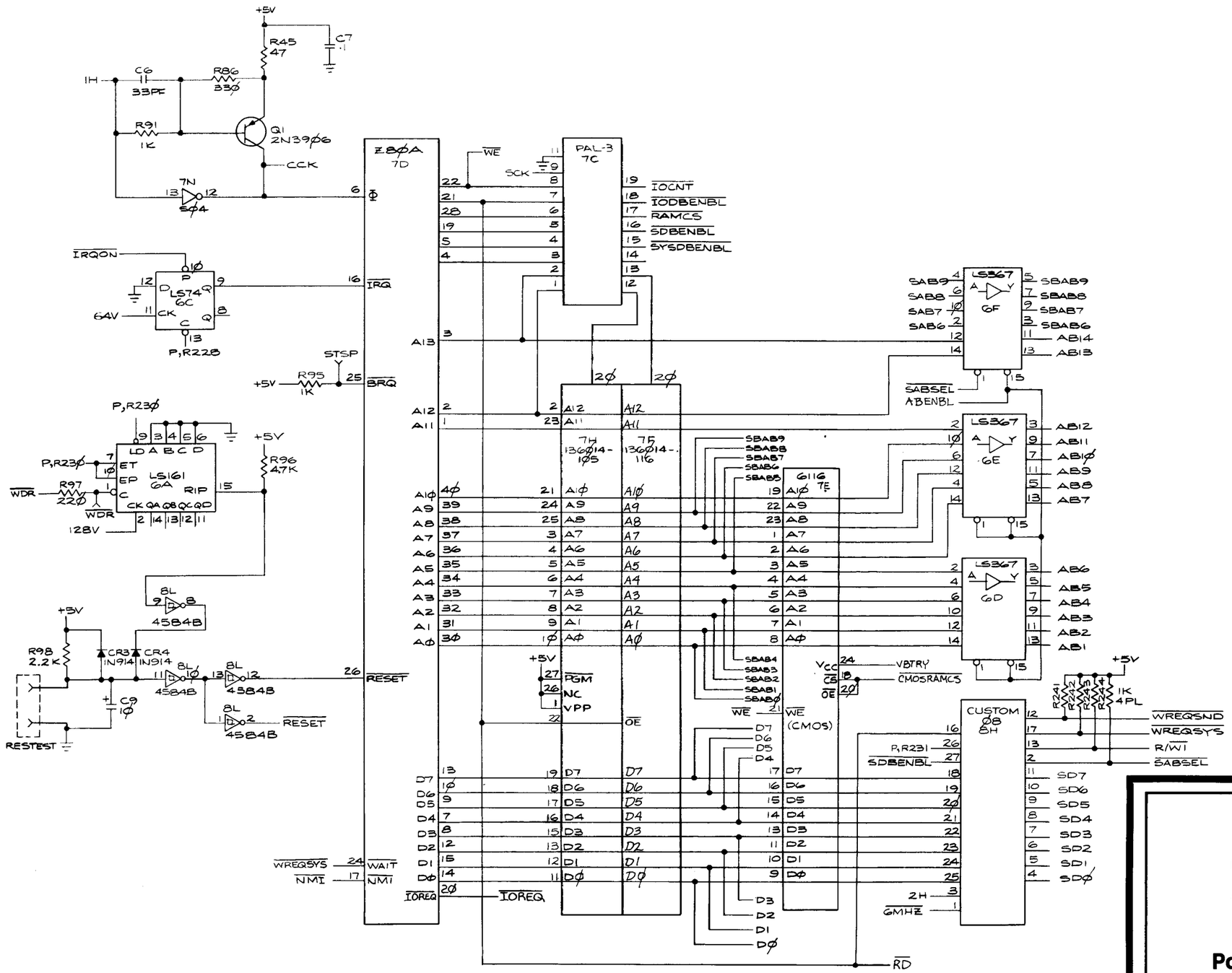

ATARI®

Pole Position CPU PCB Schematic Diagram

A Warner Communications Company

SP-218 Sheet 6A
5th printing

Sound Memory

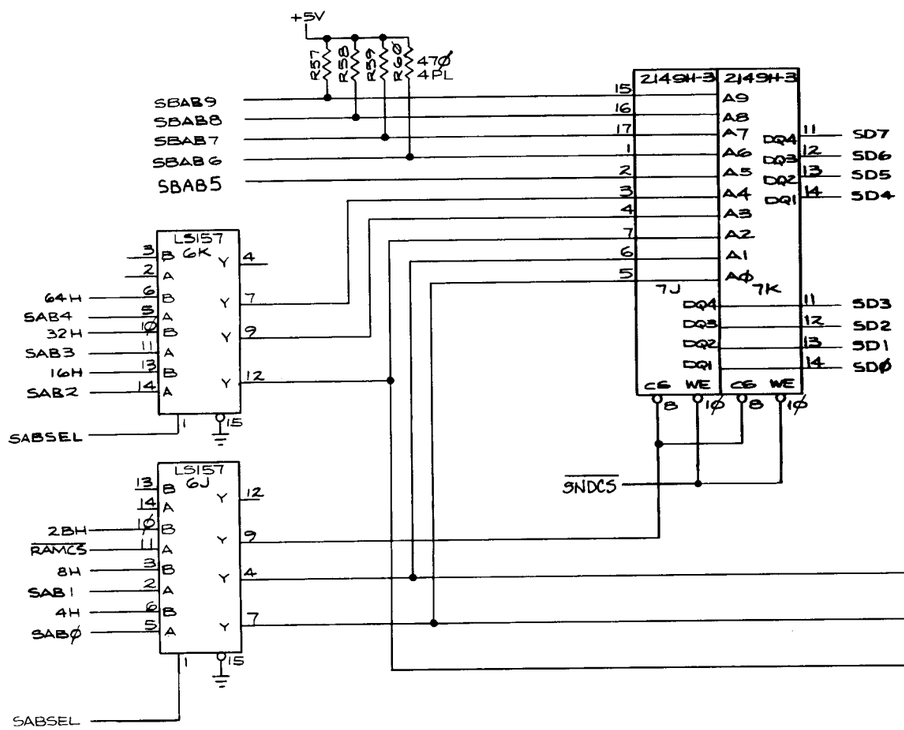

Sound and I/O Address Decoders

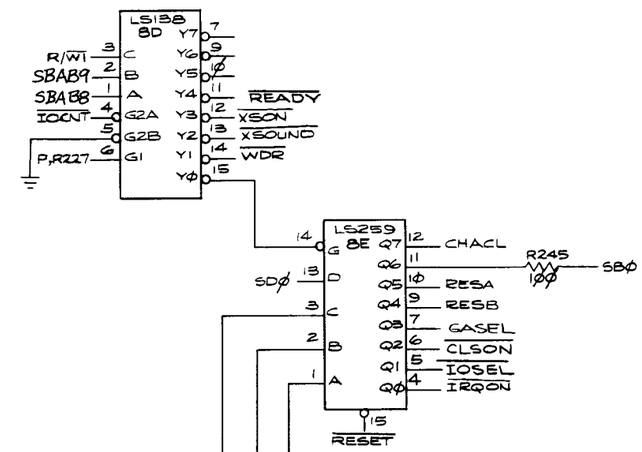

Pole Position CPU PCB Schematic Diagram

A Warner Communications Company

SP-218 Sheet 6B
5th printing

CPU PCB Sync Chain

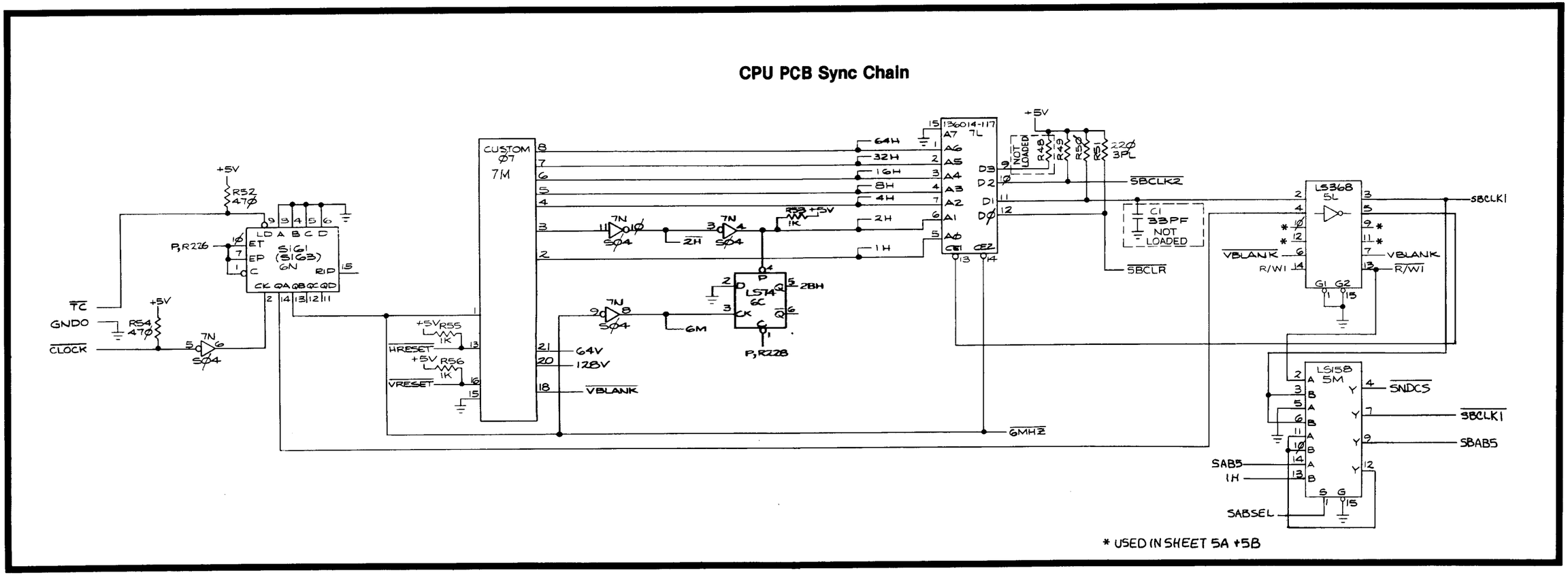

ATARI®

Pole Position CPU PCB Schematic Diagram

A Warner Communications Company

SP-218 Sheet 7A
5th printing

Sound Buffers and Multiplexer

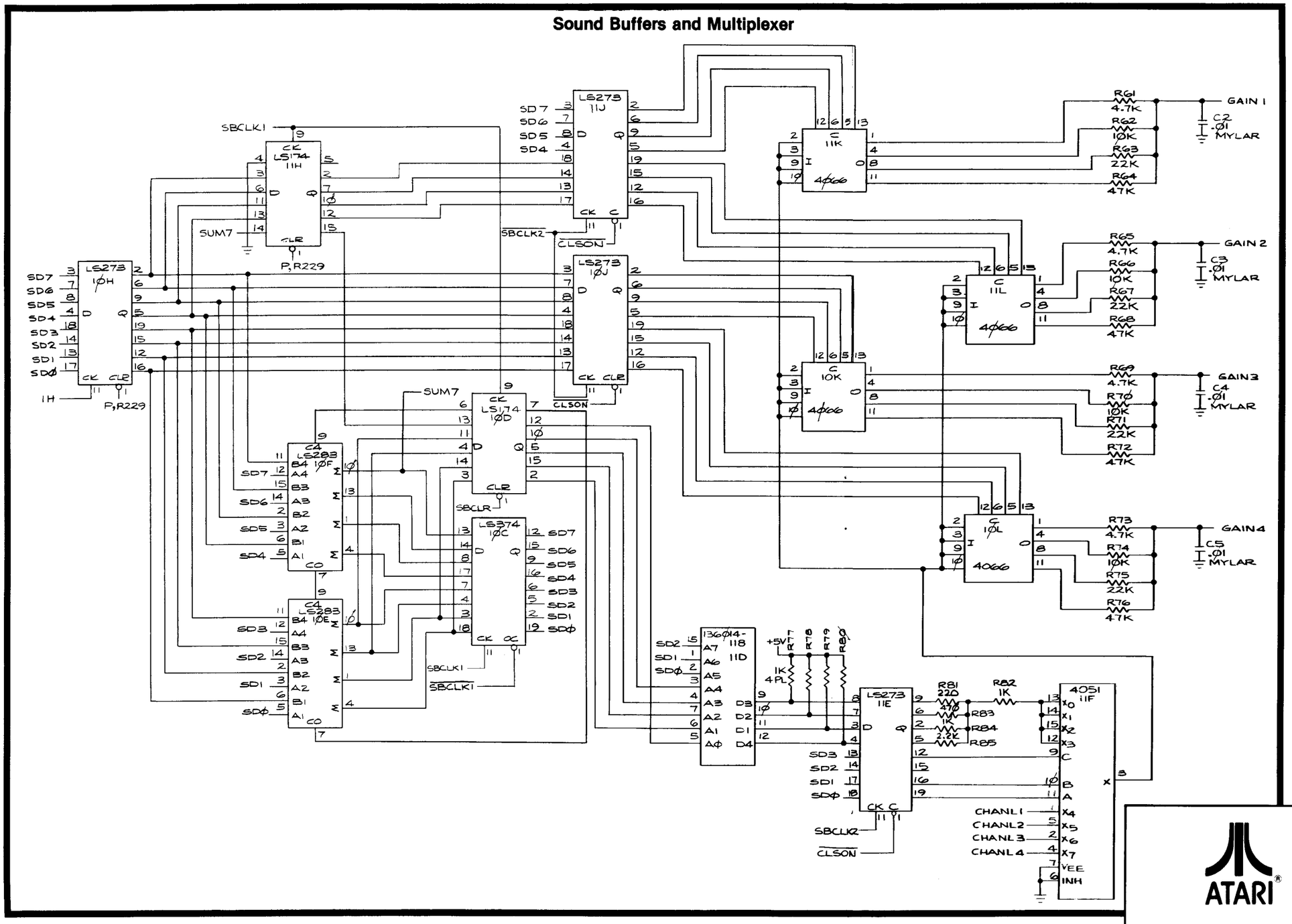

ATARI®

Pole Position CPU PCB Schematic Diagram

A Warner Communications Company

SP-218 Sheet 7B
5th printing

Brake and Gas Pedal Input

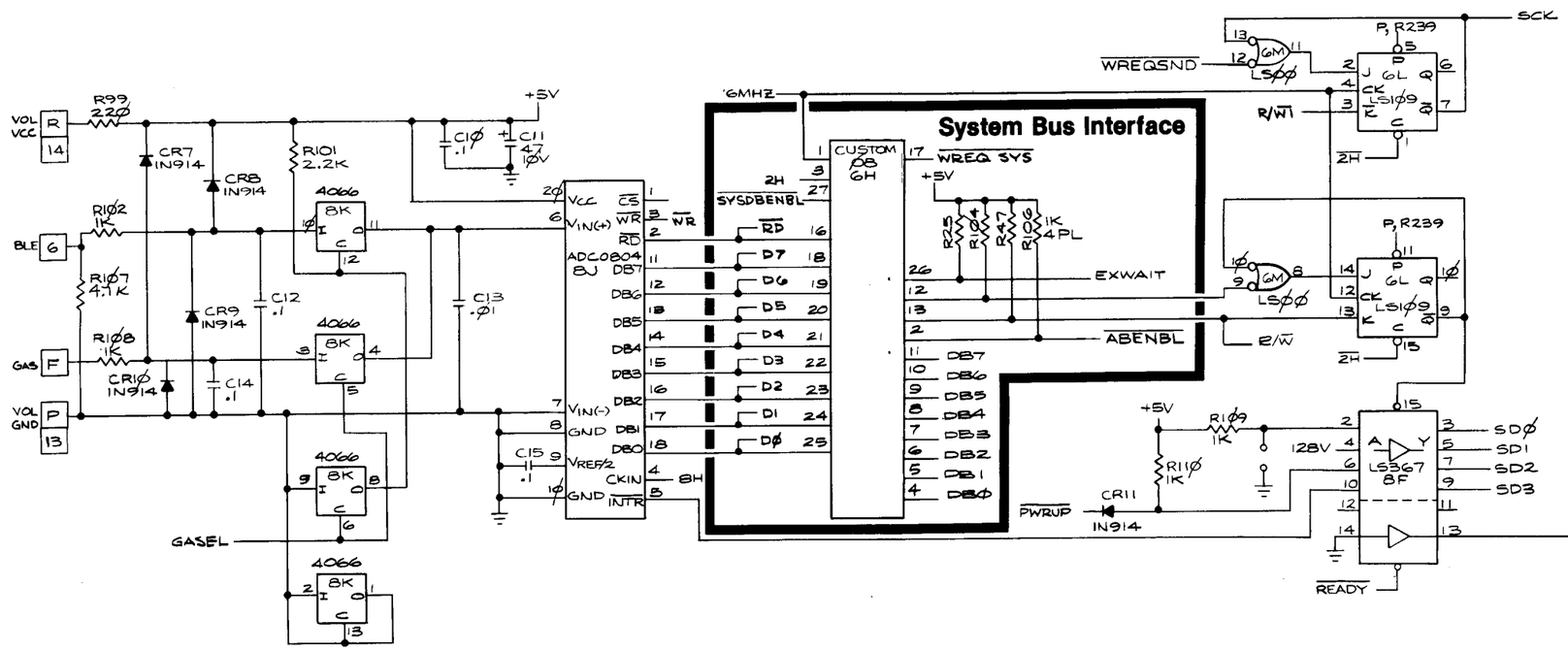

Pole Position CPU PCB Schematic Diagram

SP-218 Sheet 8A
5th printing

Option Switch Input and I/O Interface

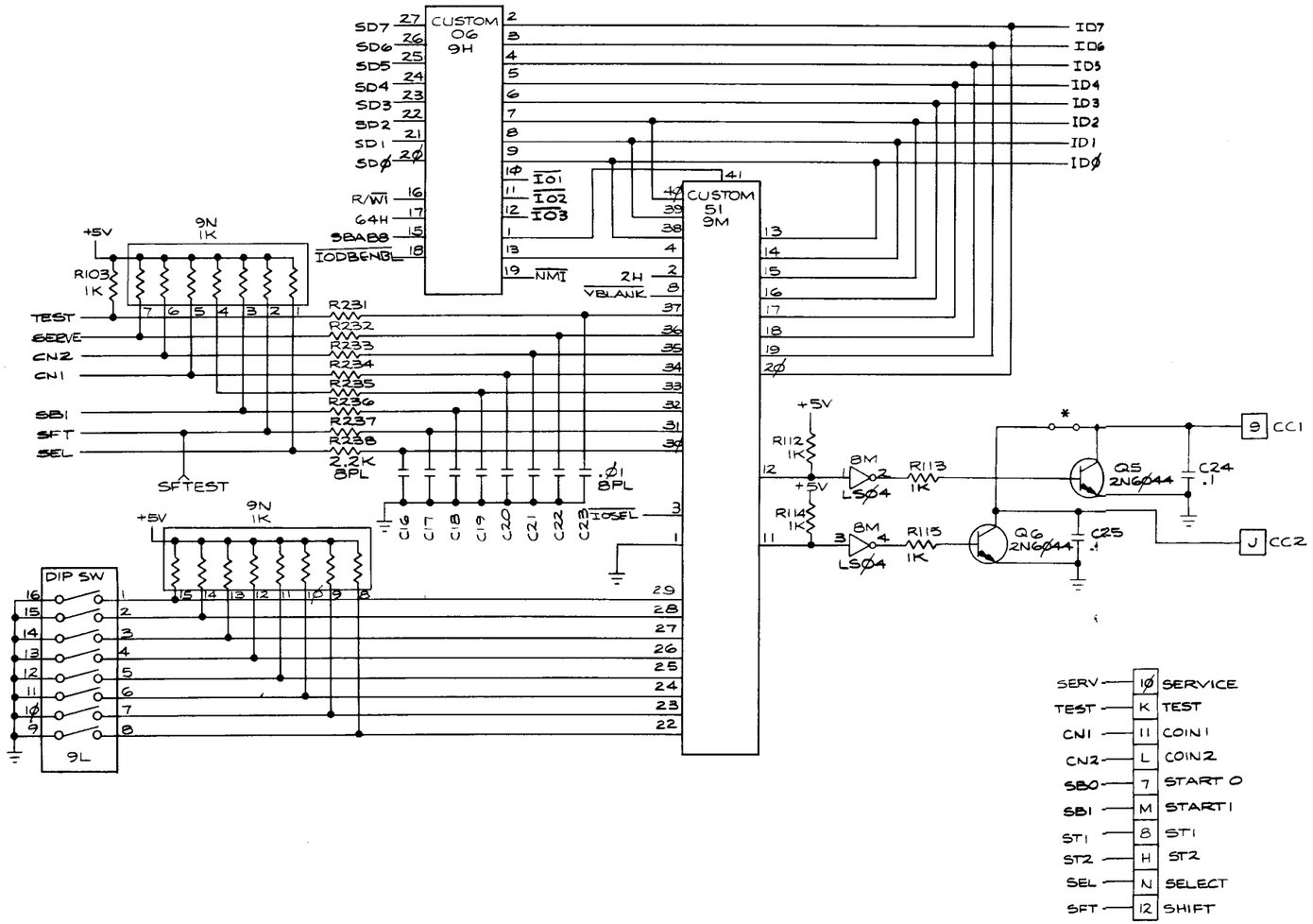

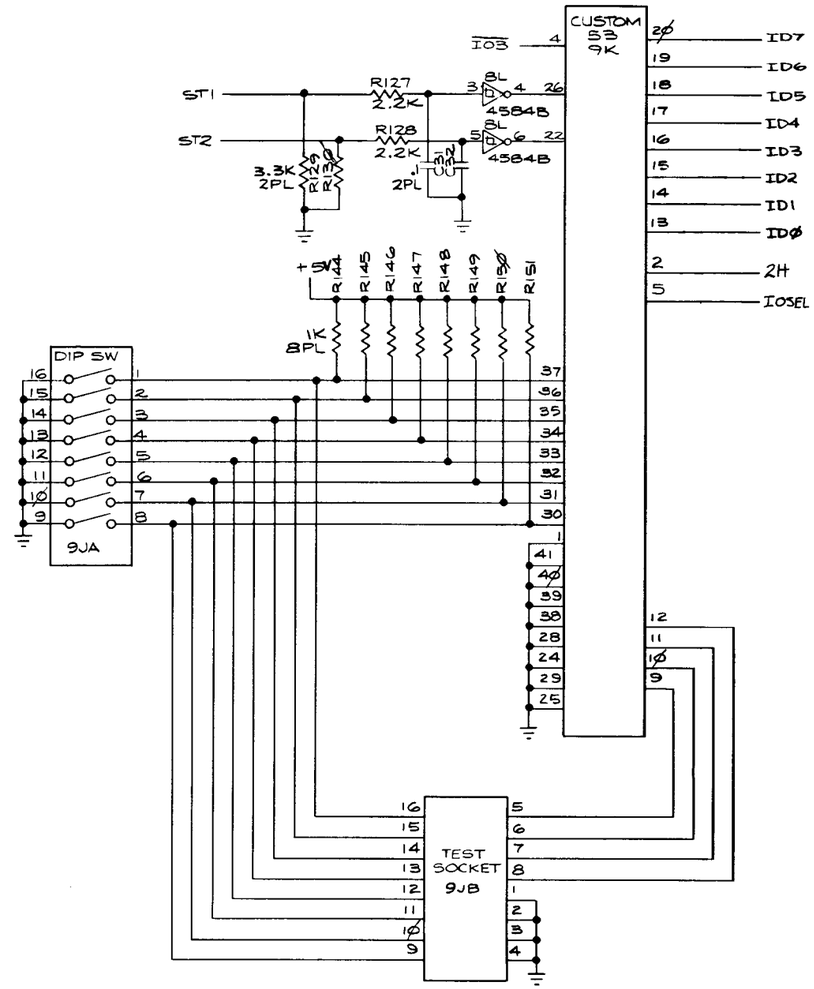

Pole Position CPU PCB Schematic Diagram

A Warner Communications Company

SP-218 Sheet 8B
5th printing

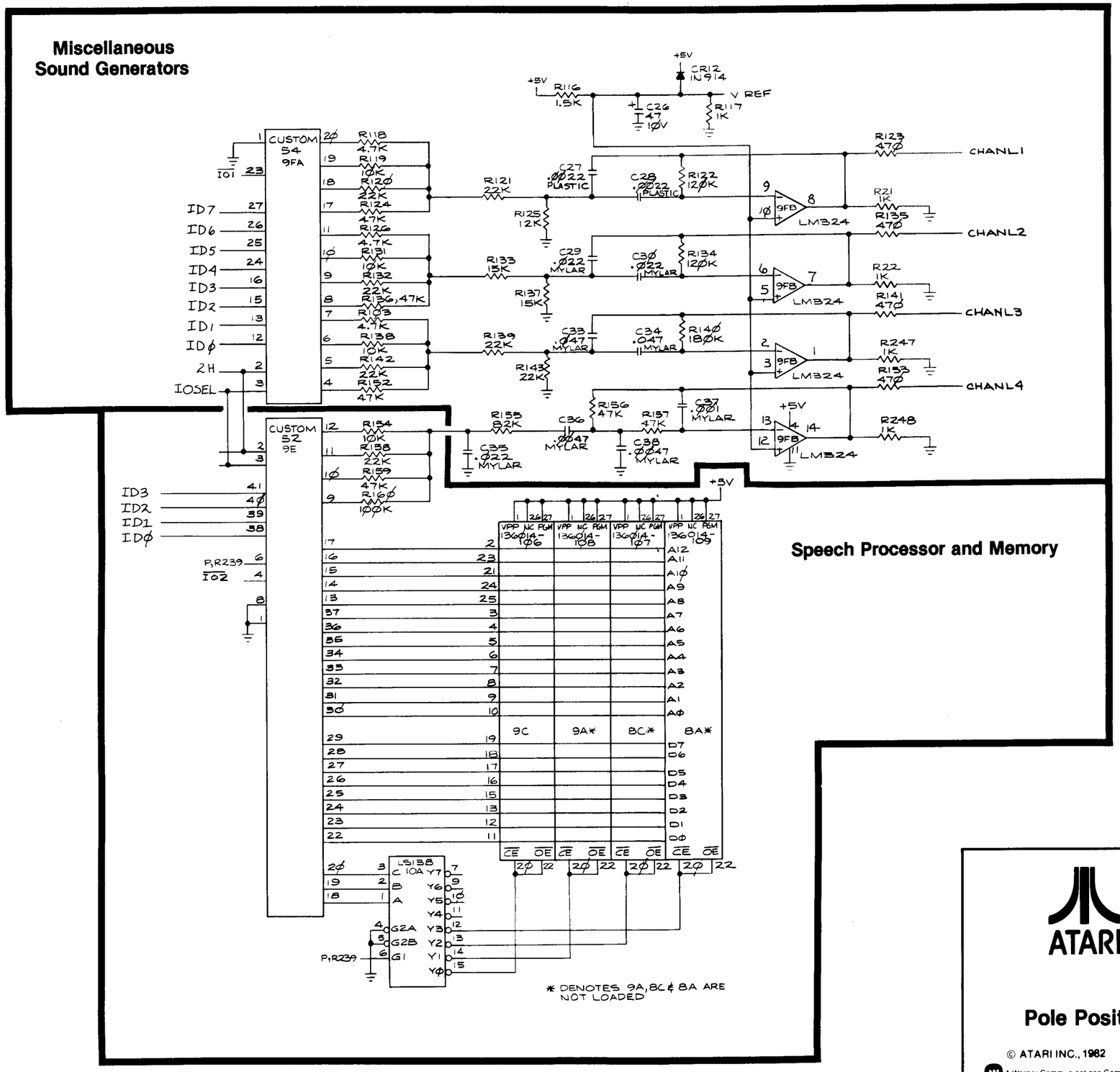

ATARI®

Pole Position CPU PCB Schematic Diagram

A Warner Communications Company

SP-218 Sheet 9A
5th printing

Engine Sound Generator

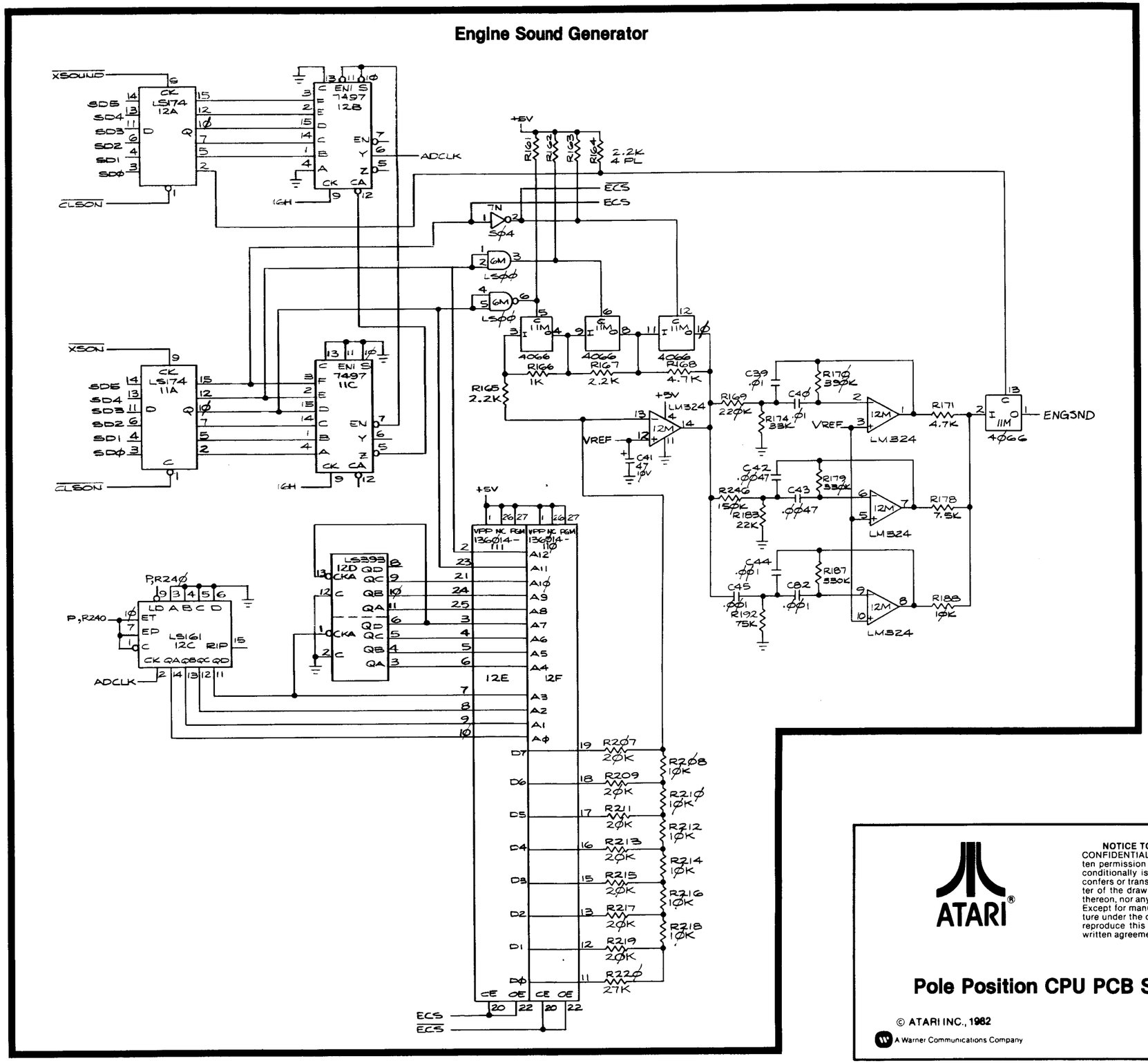

ATARI®

Pole Position CPU PCB Schematic Diagram

SP-218 Sheet 9B
5th printing

Sound Output

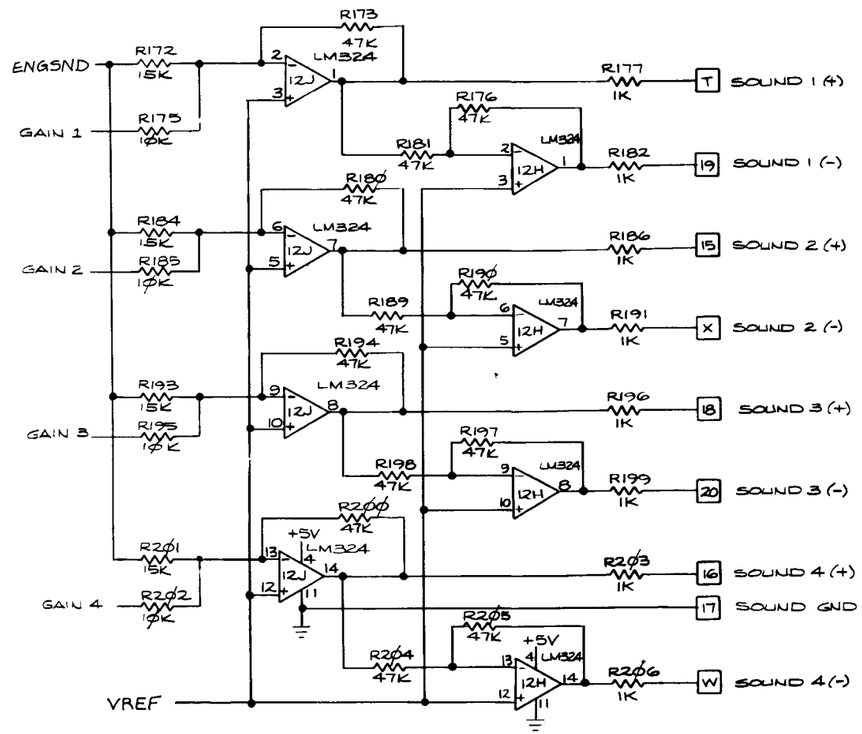

ATARI®

Pole Position CPU PCB Schematic Diagram

A Warner Communications Company

SP-218 Sheet 10A
5th printing

Video PCB Edge Connector

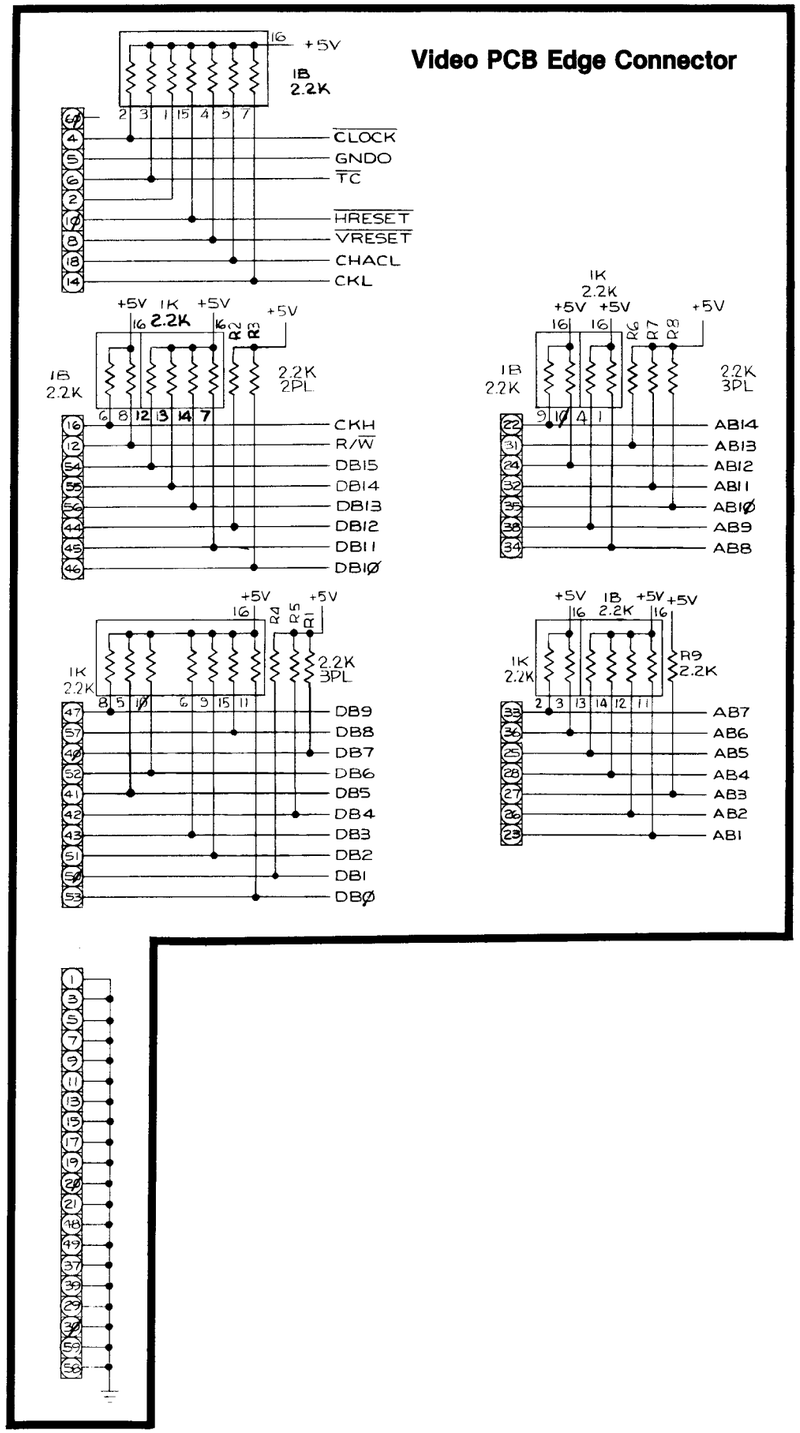

Video PCB Power Input

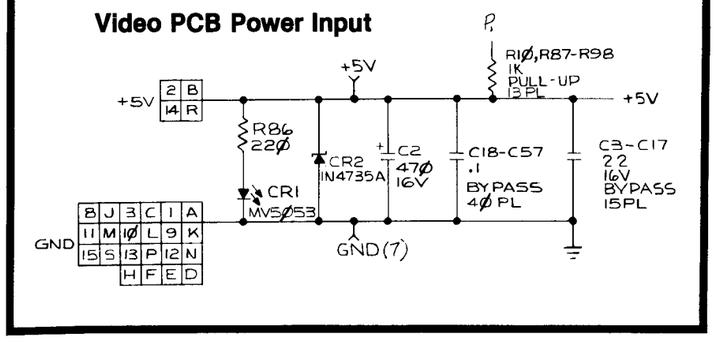

Clock

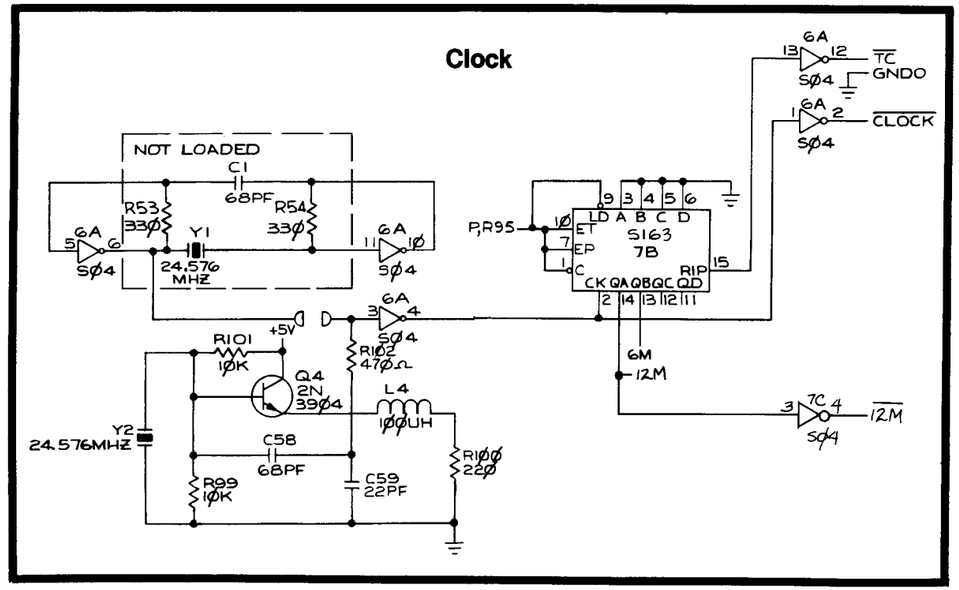

ATARI®

Pole Position Video PCB Schematic Diagram

A Warner Communications Company

SP-218 Sheet 10B
5th printing

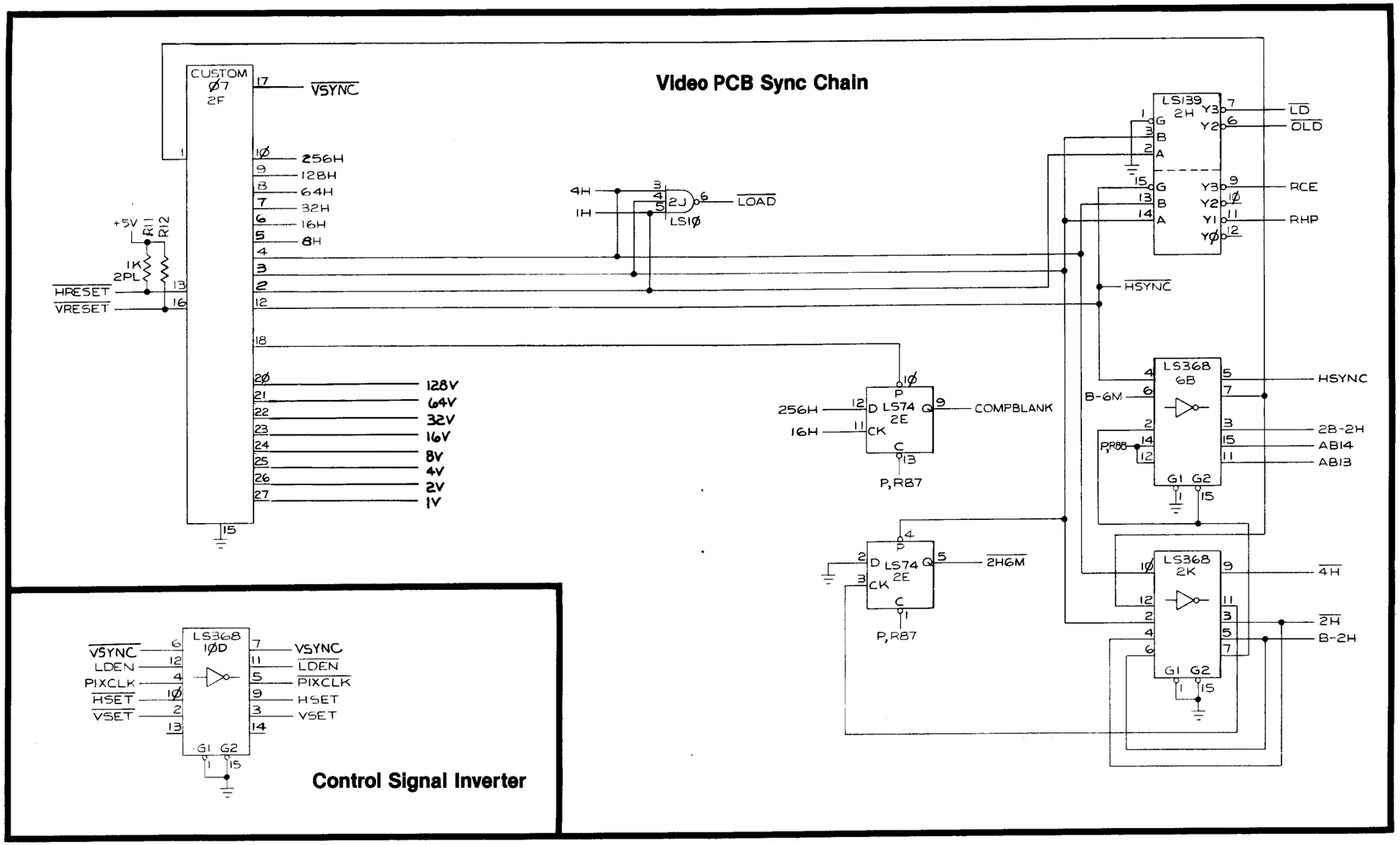

Control Signal Inverter

Pole Position Video PCB Schematic Diagram

SP-218 Sheet 11A
5th printing

Vertical Position Modifiers

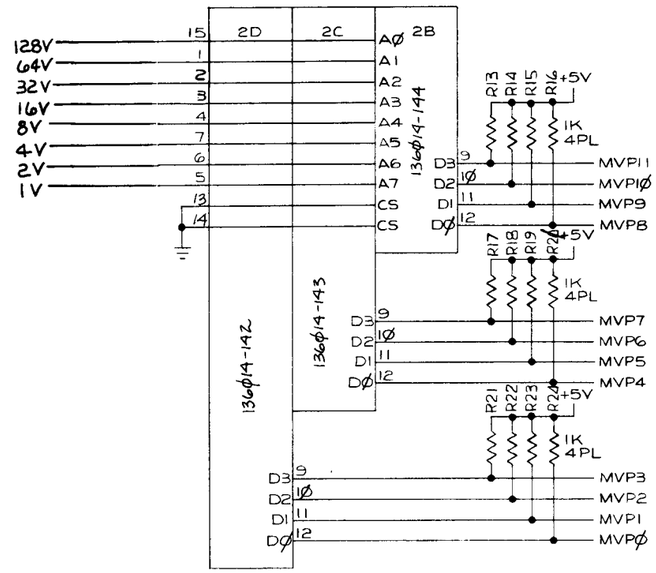

Address Bus Interface

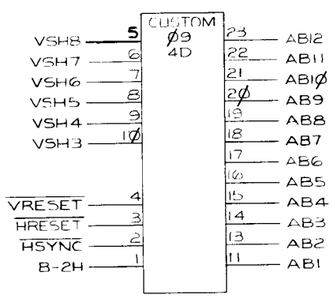

Vertical Position Buffers and Adders

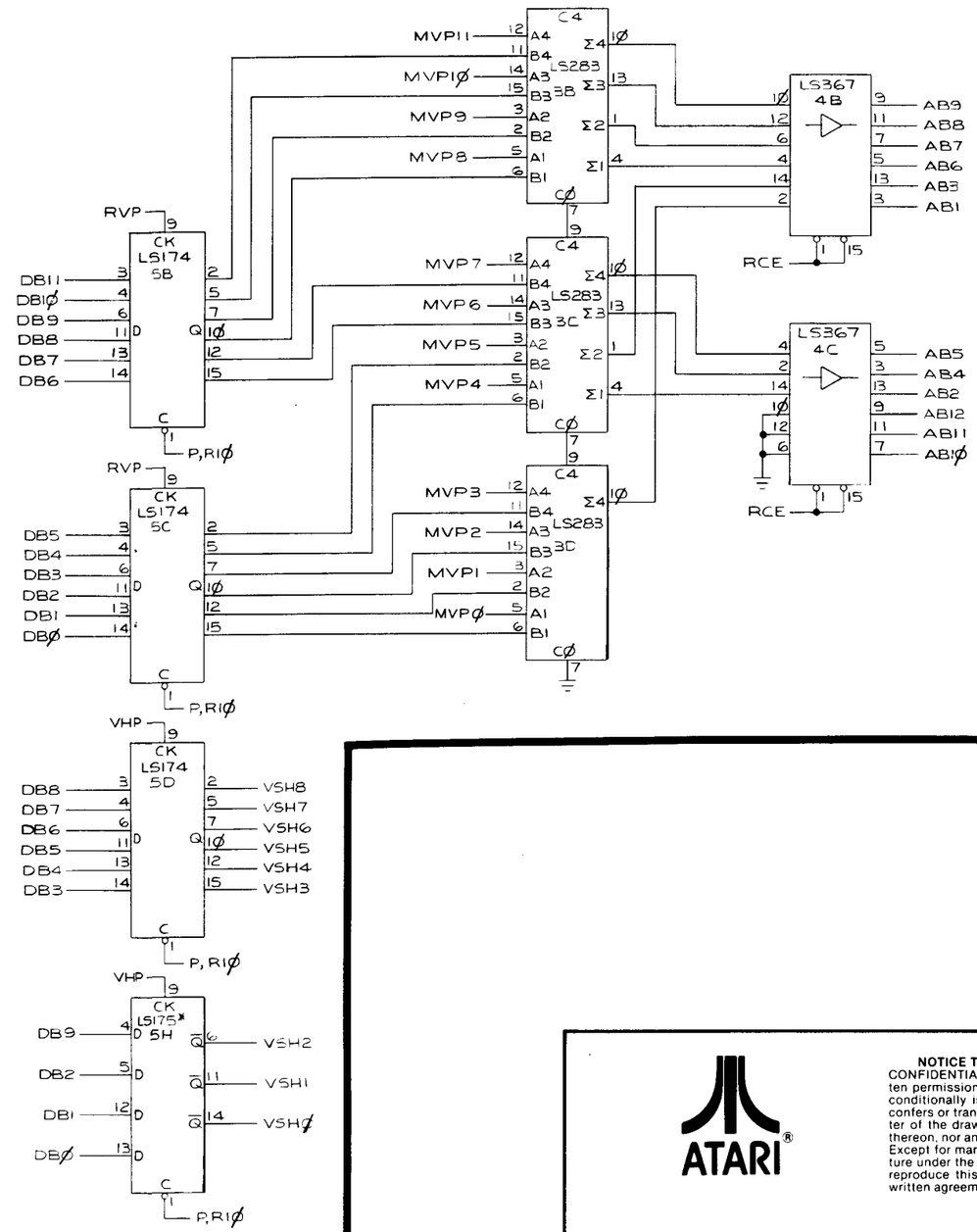

ATARI®

Pole Position Video PCB Schematic Diagram

A Warner Communications Company

SP-218 Sheet 11B
5th printing

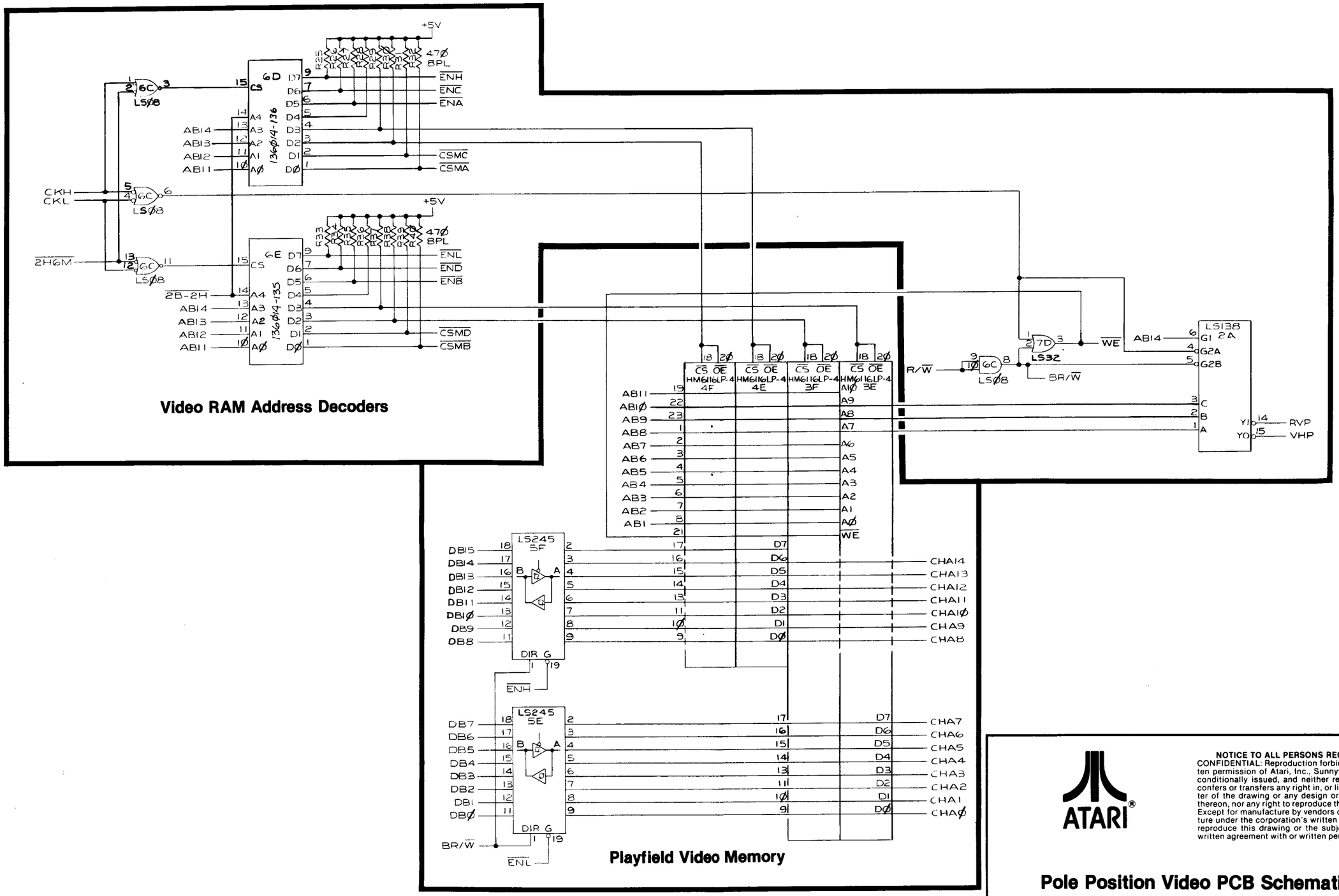

NOTICE TO ALL PERSONS RECEIVING THIS DRAWING
CONFIDENTIAL: Reproduction forbidden without the specific written permission of Atari, Inc., Sunnyvale, CA. This drawing is only conditionally issued, and neither receipt nor possession thereof confers or transfers any right in, or license to use, the subject matter of the drawing or any design or technical information shown thereon, nor any right to reproduce this drawing or any part thereof. Except for manufacture by vendors of Atari, Inc., and for manufacture under the corporation's written license, no right is granted to reproduce this drawing or the subject matter thereof, unless by written agreement with or written permission from the corporation.

ATARI®

Pole Position Video PCB Schematic Diagram

A Warner Communications Company

SP-218 Sheet 12A
5th printing

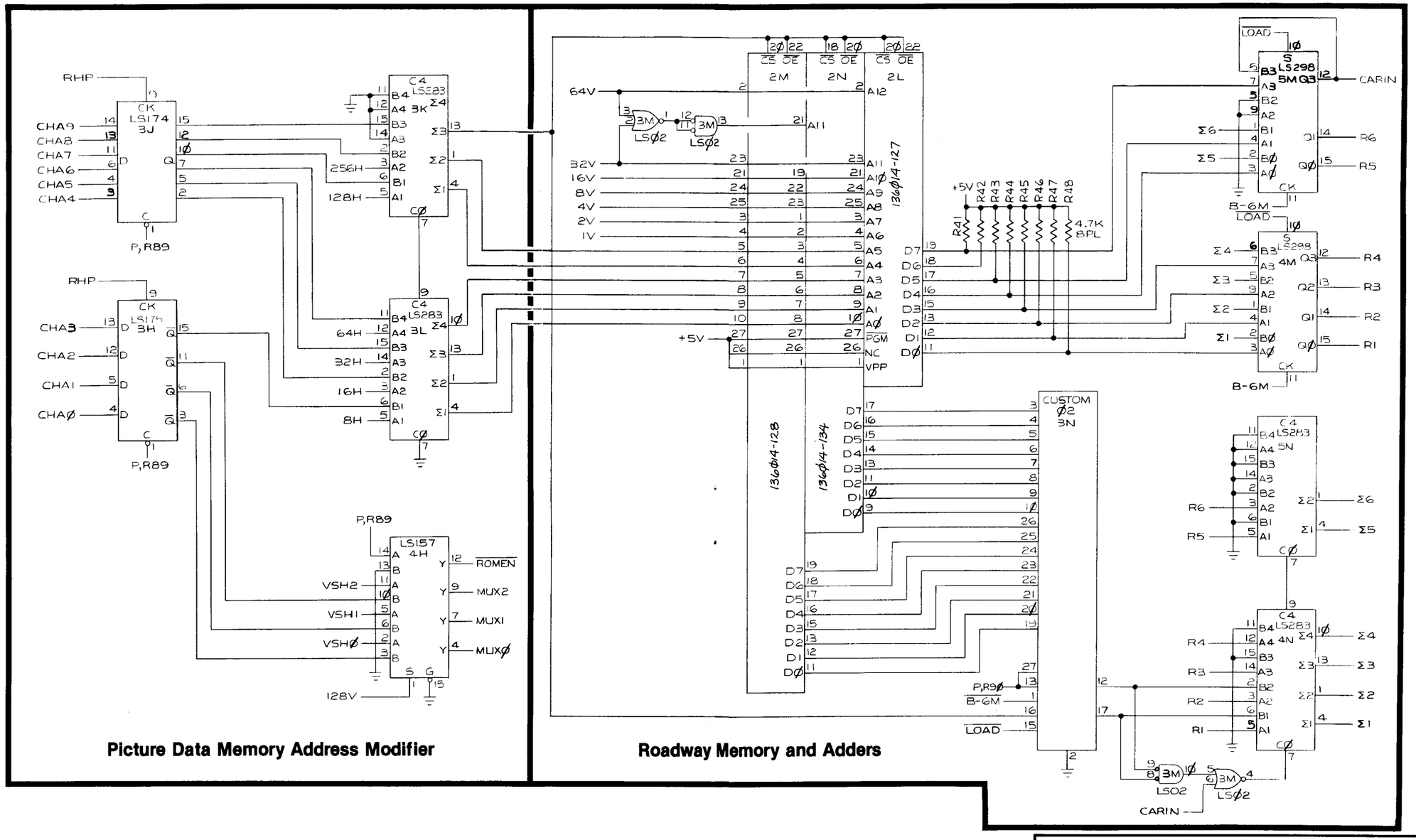

ATARI®

Pole Position Video PCB Schematic Diagram

A Warner Communications Company

SP-218 Sheet 12B
5th printing

Alphanumeric and Background PROM

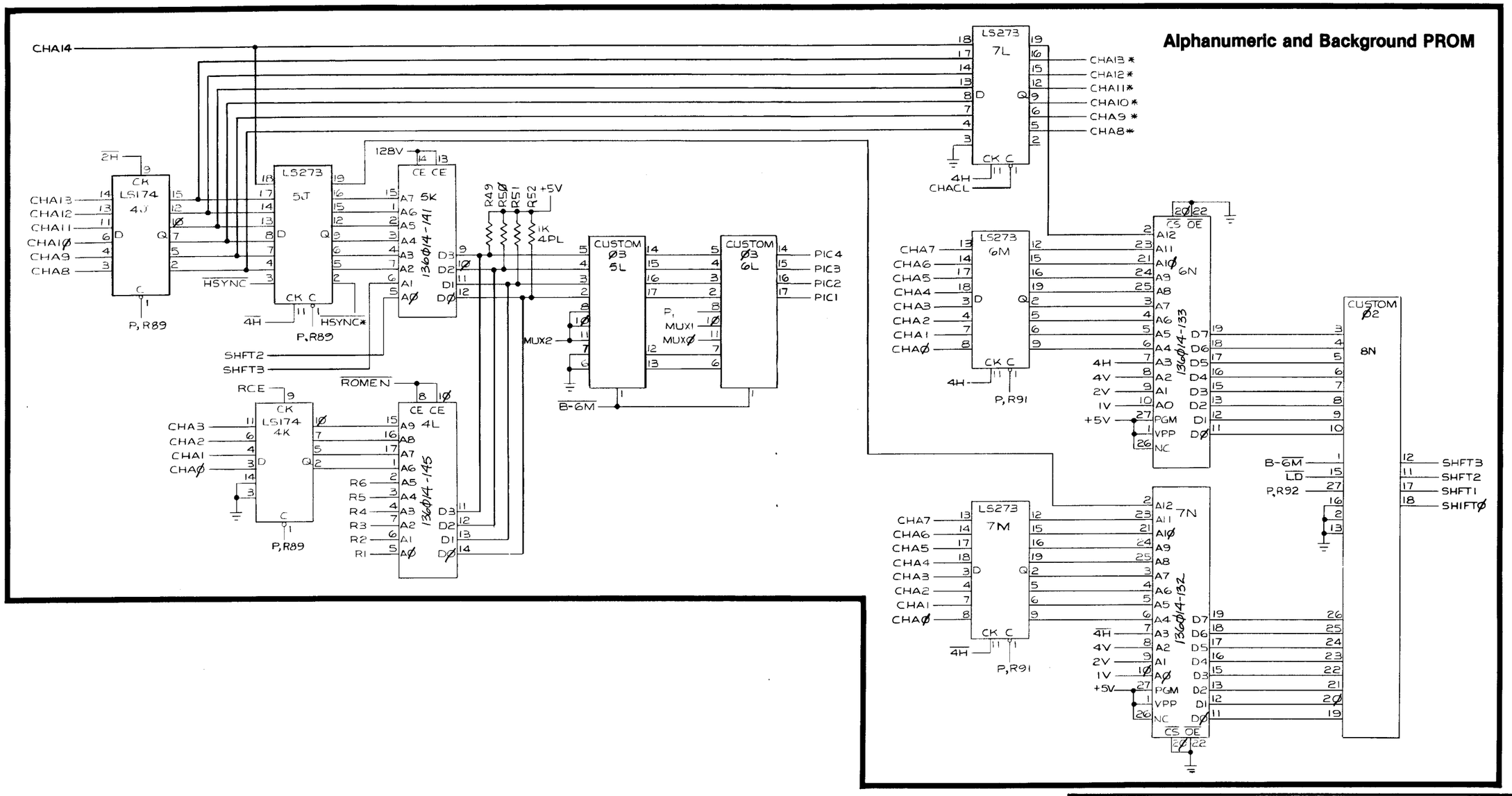

ATARI®

Pole Position Video PCB Schematic Diagram

A Warner Communications Company

SP-218 Sheet 13A
5th printing

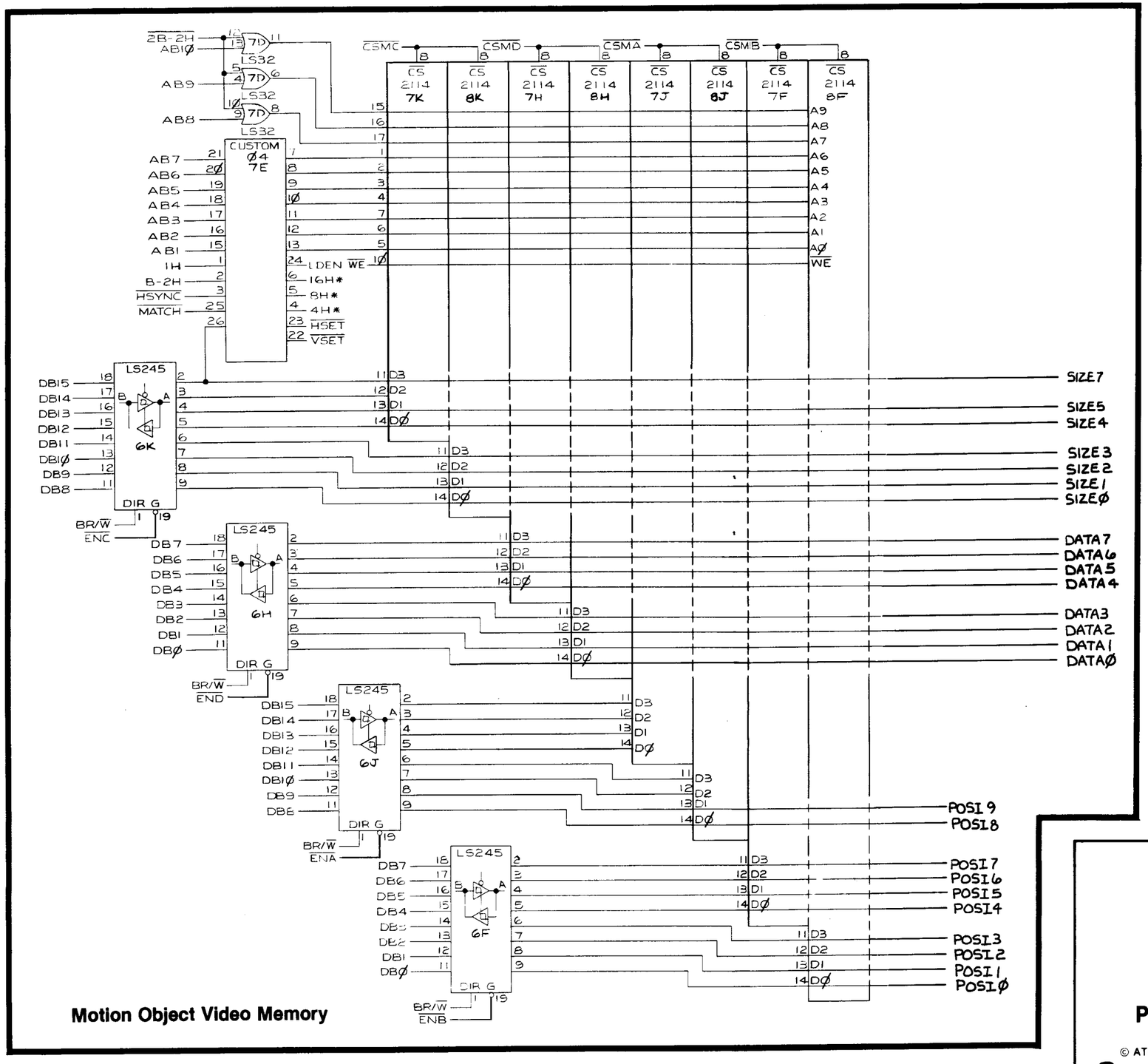

Motion Object Video Memory

ATARI®

Pole Position Video PCB Schematic Diagram

A Warner Communications Company

SP-218 Sheet 13B
5th printing

Match Circuit

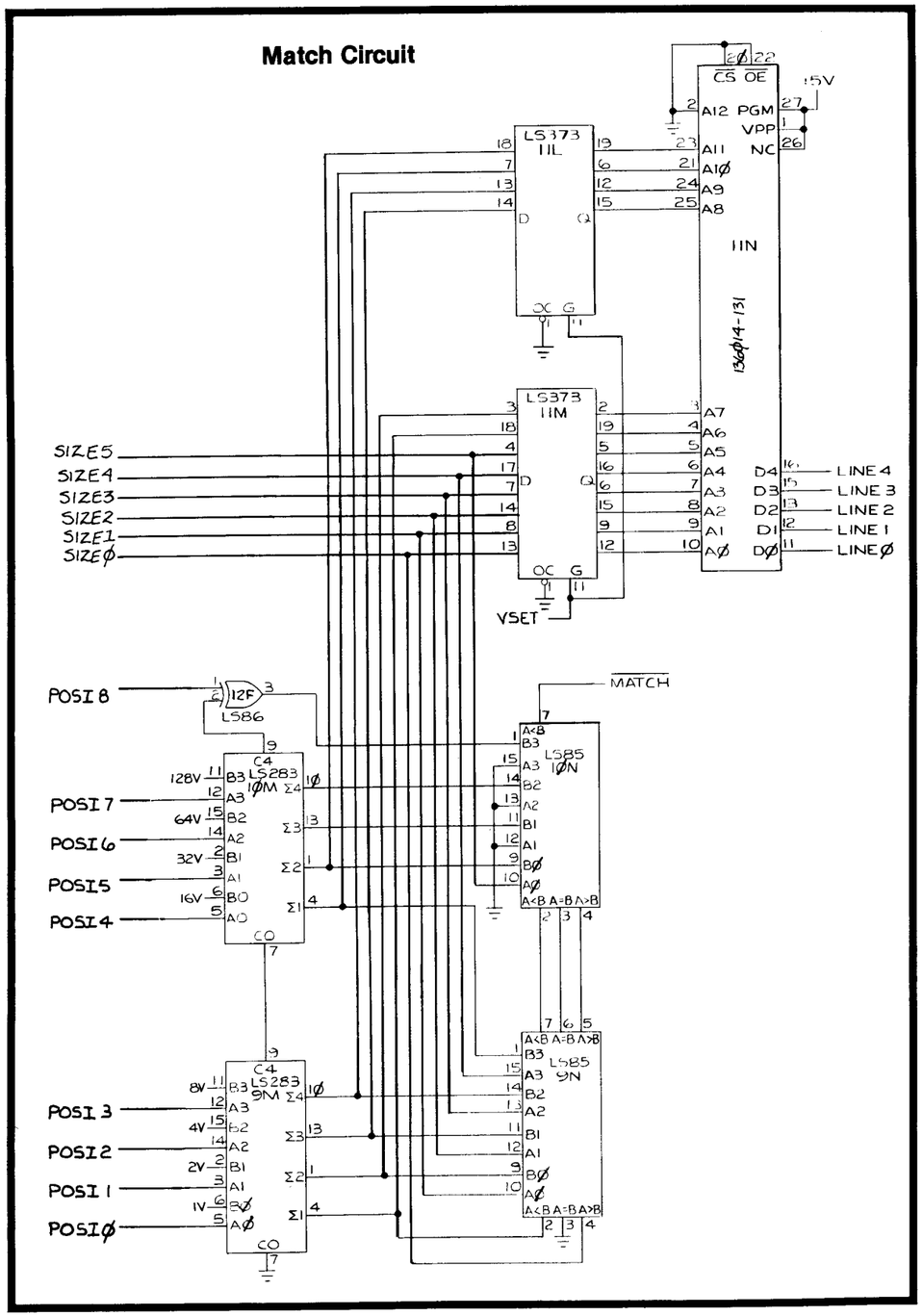

Size Clock-Rate Generator

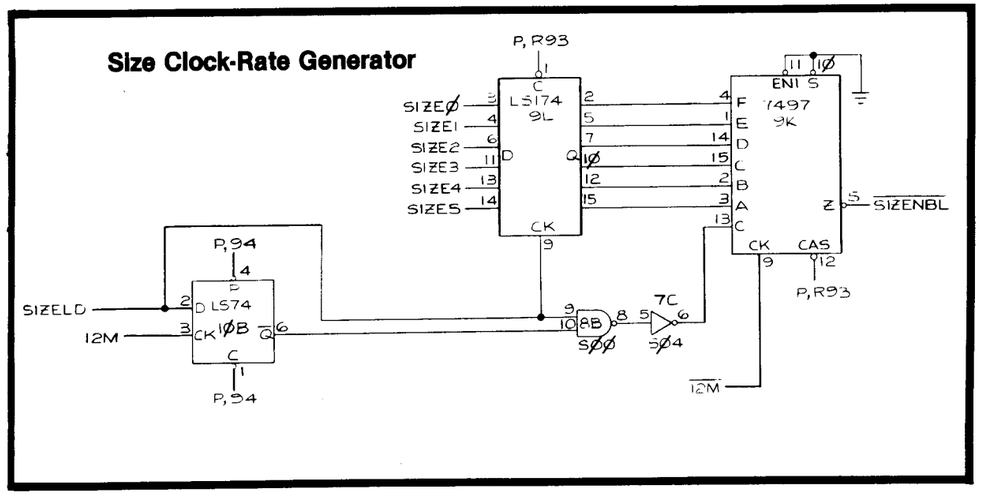

Pole Position Video PCB Schematic Diagram

A Warner Communications Company

SP-218 Sheet 14A
5th printing

Picture Memory (Signs and Cars)

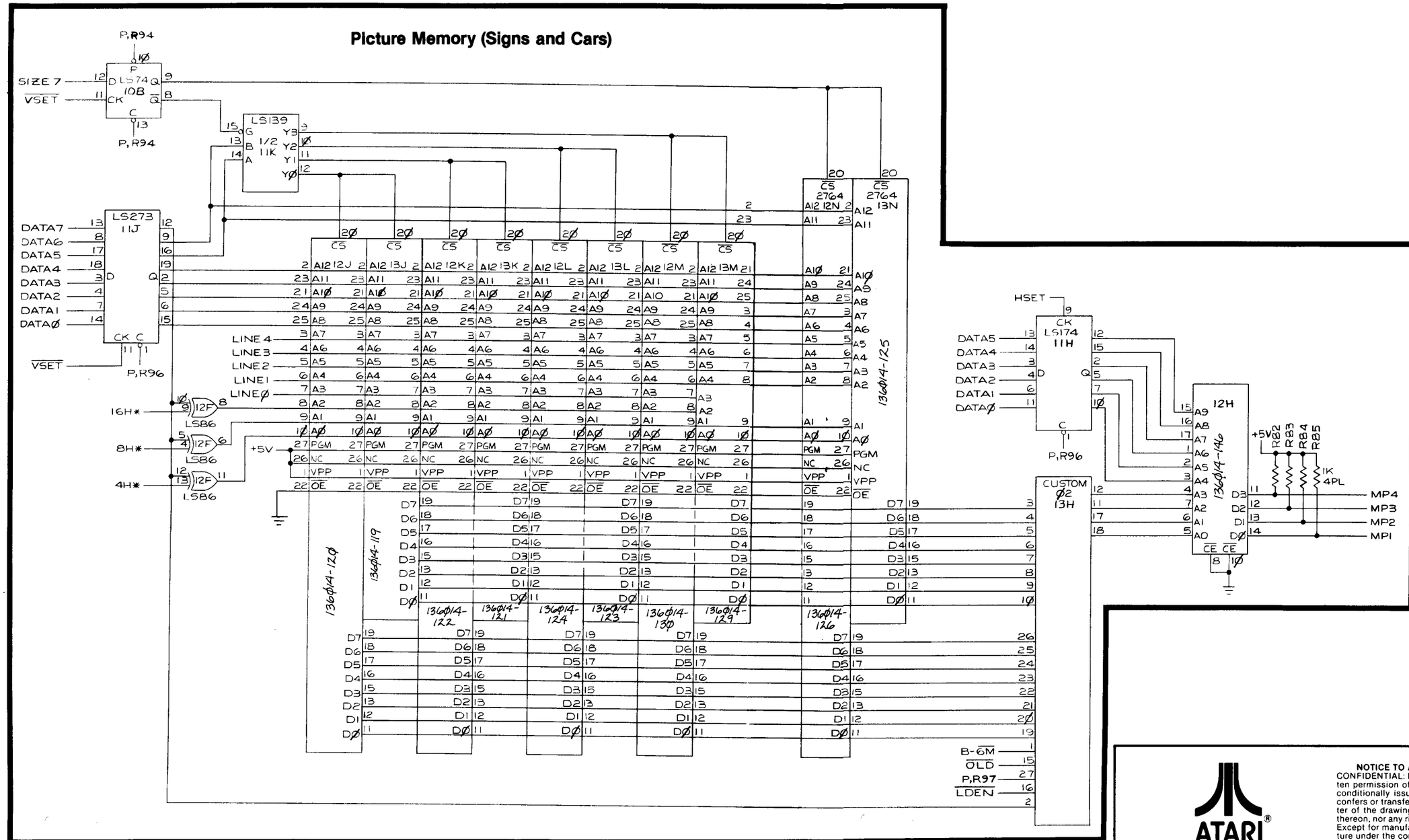

ATARI®

Pole Position Video PCB Schematic Diagram

A Warner Communications Company

SP-218 Sheet 14B
5th printing

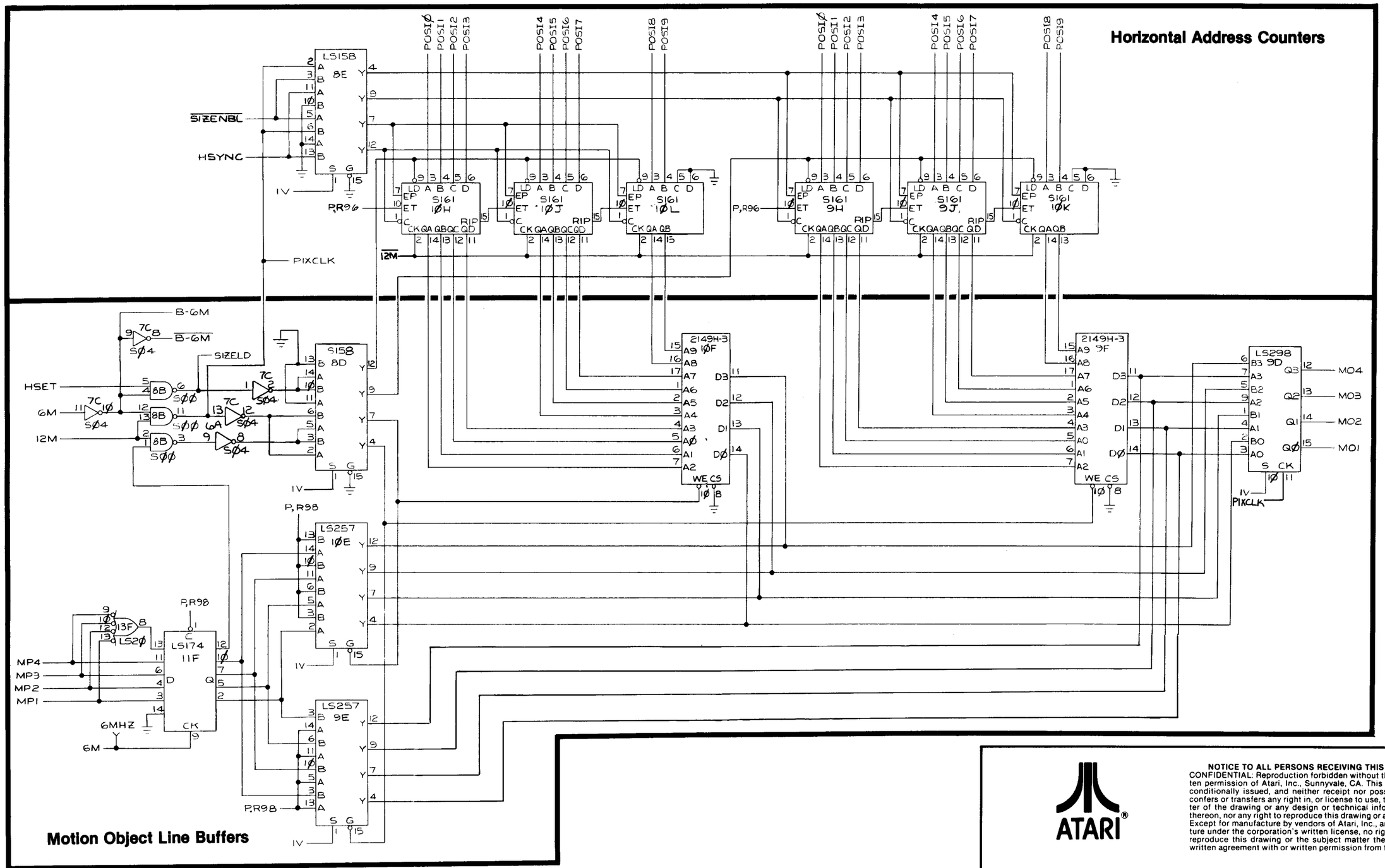

ATARI®

Pole Position Video PCB Schematic Diagram

A Warner Communications Company

SP-218 Sheet 15A
5th printing

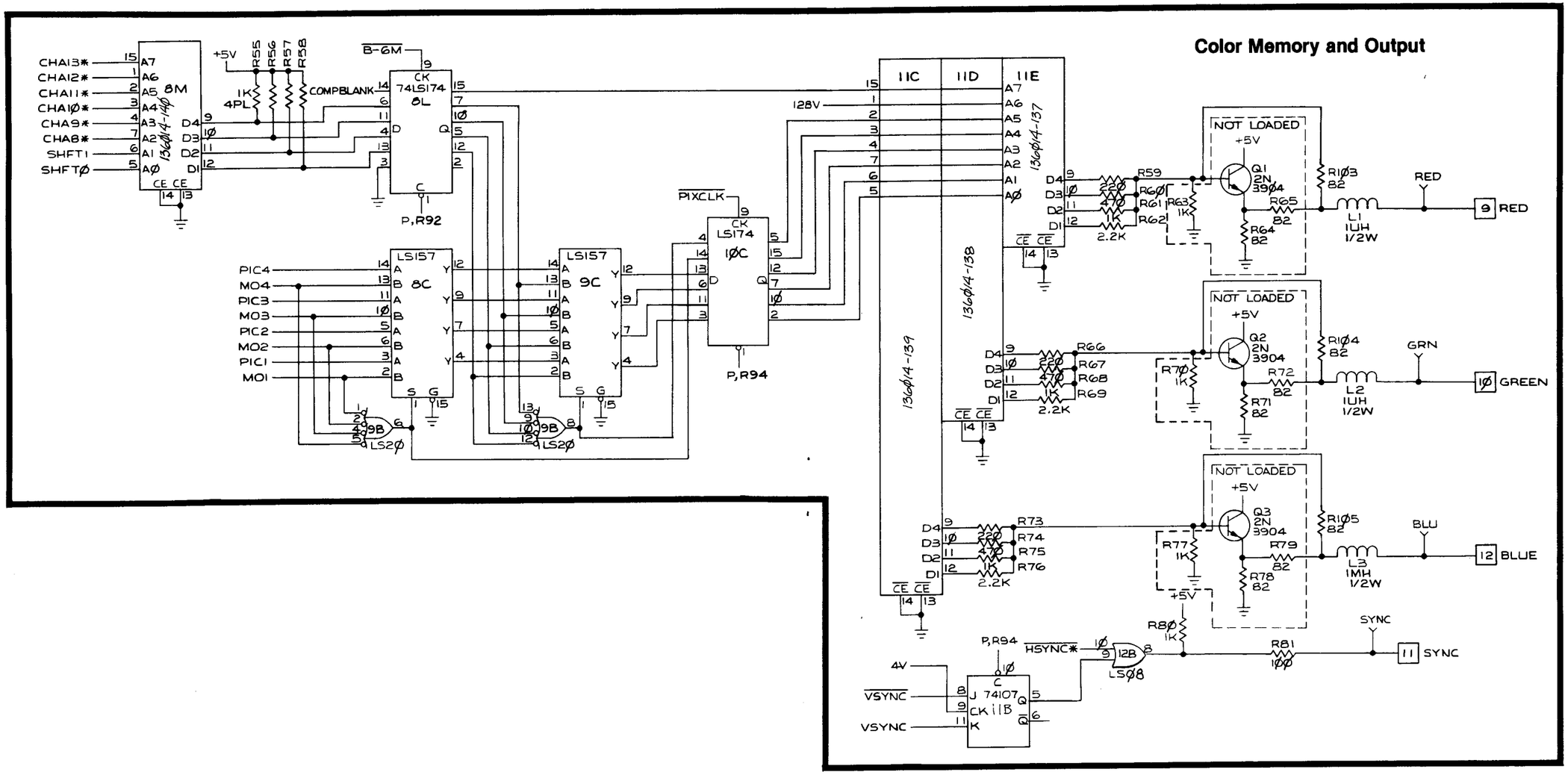

Pole Position Video PCB Schematic Diagram

SP-218 Sheet 15B
5th printing

Matsushita 19-Inch Color Raster-Scan Video Display Schematic Diagram

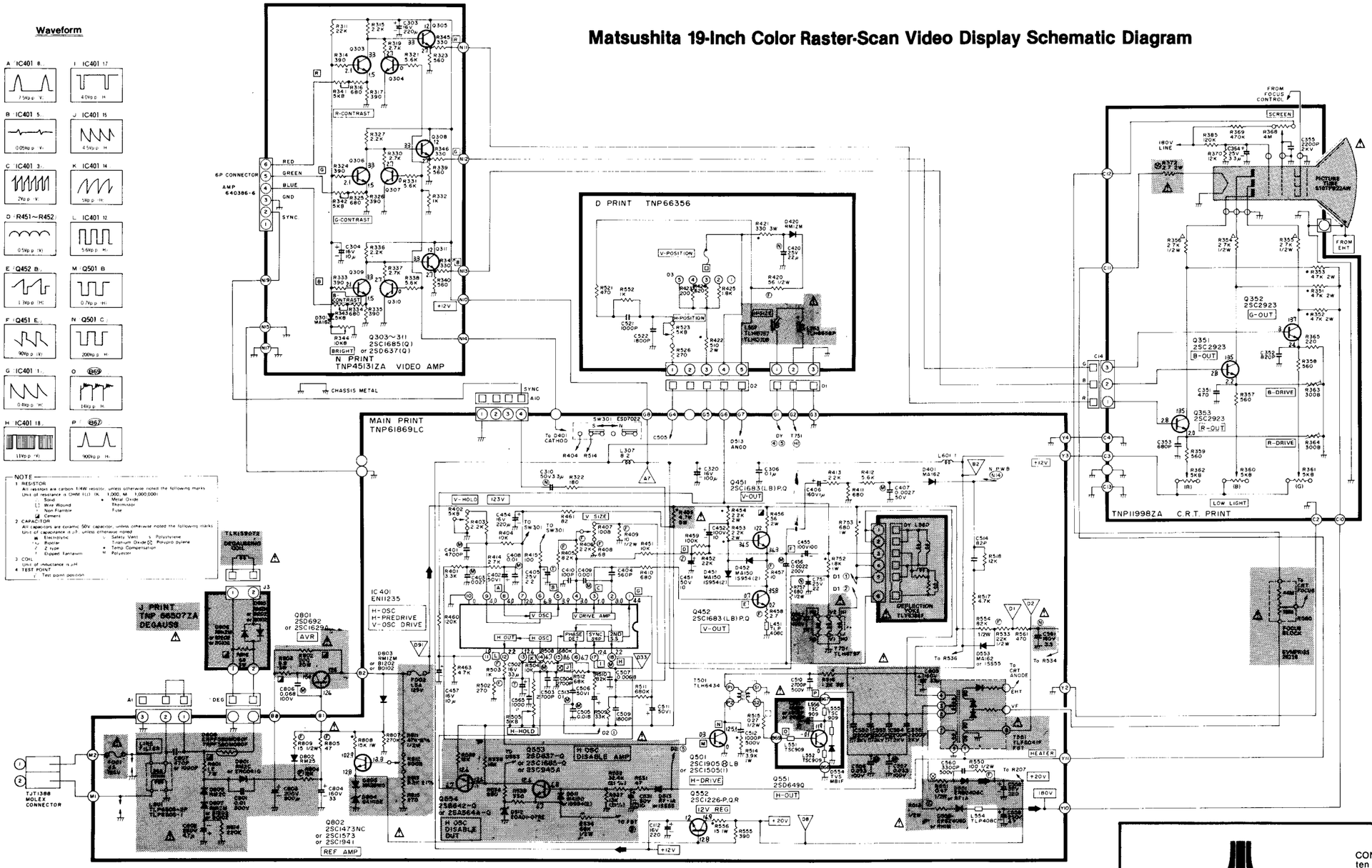

WARNING

Components identified by shading have special characteristics important to safety and must be replaced only with identical parts.

ATARI®

Matsushita Display Schematic Diagram

A Warner Communications Company

SP-218 Sheet 16B
5th printing

Electrohome 19-Inch Color Raster-Scan Video Display Schematic Diagram

Schematic Notes

Unless otherwise specified
Resistance: (Ω) (K→KΩ, M→MΩ), 1/4 (W) carbon resistor
Capacitance: 1 or higher→ (pF), less than 1→ (μF)
working voltage→ 50 (V)
ceramic capacitor
Inductance: (μH)
Electrolytic Cap: Capacitance Value (μF)/working voltage (V),
NP → non-polar (or bipolar) electrolytic cap.
Refer to the parts list for additional component information.

indicates test point connection

indicates chassis ground unless otherwise specified

Hz indicates cycles per second

For **safety** purposes (and continuing reliability)
⚠ replace all components marked with safety symbol with identical type.
NOTE: FR → fusible resistor

Parts identification on circuit boards:
e.g. SU1126A (R107 = R1107)
SU3030A (R113 = R3113)

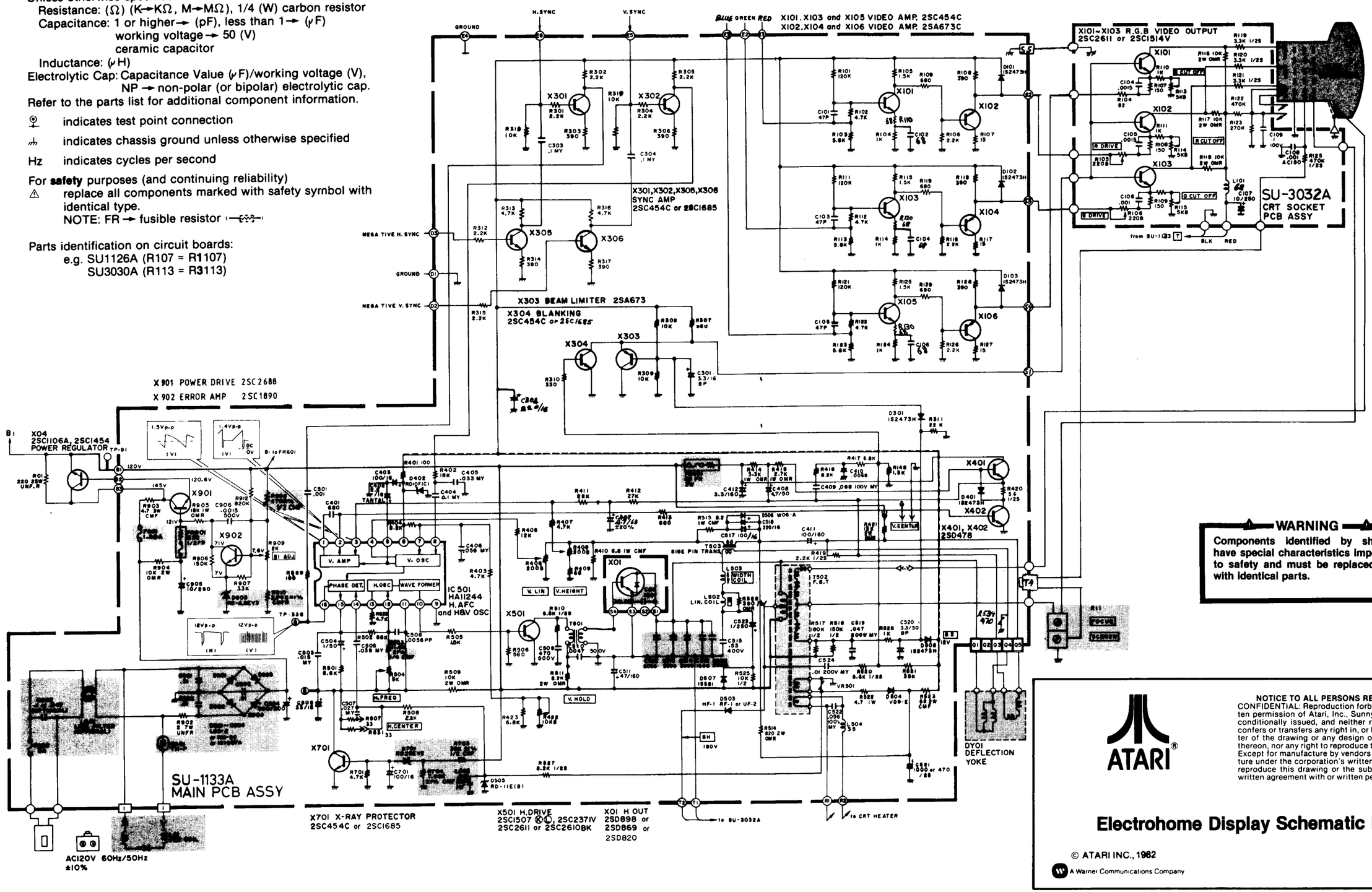

⚠ WARNING ⚠

Components identified by shading have special characteristics important to safety and must be replaced only with identical parts.

ATARI®

Electrohome Display Schematic Diagram

SP-218 Sheet 16A
5th printing