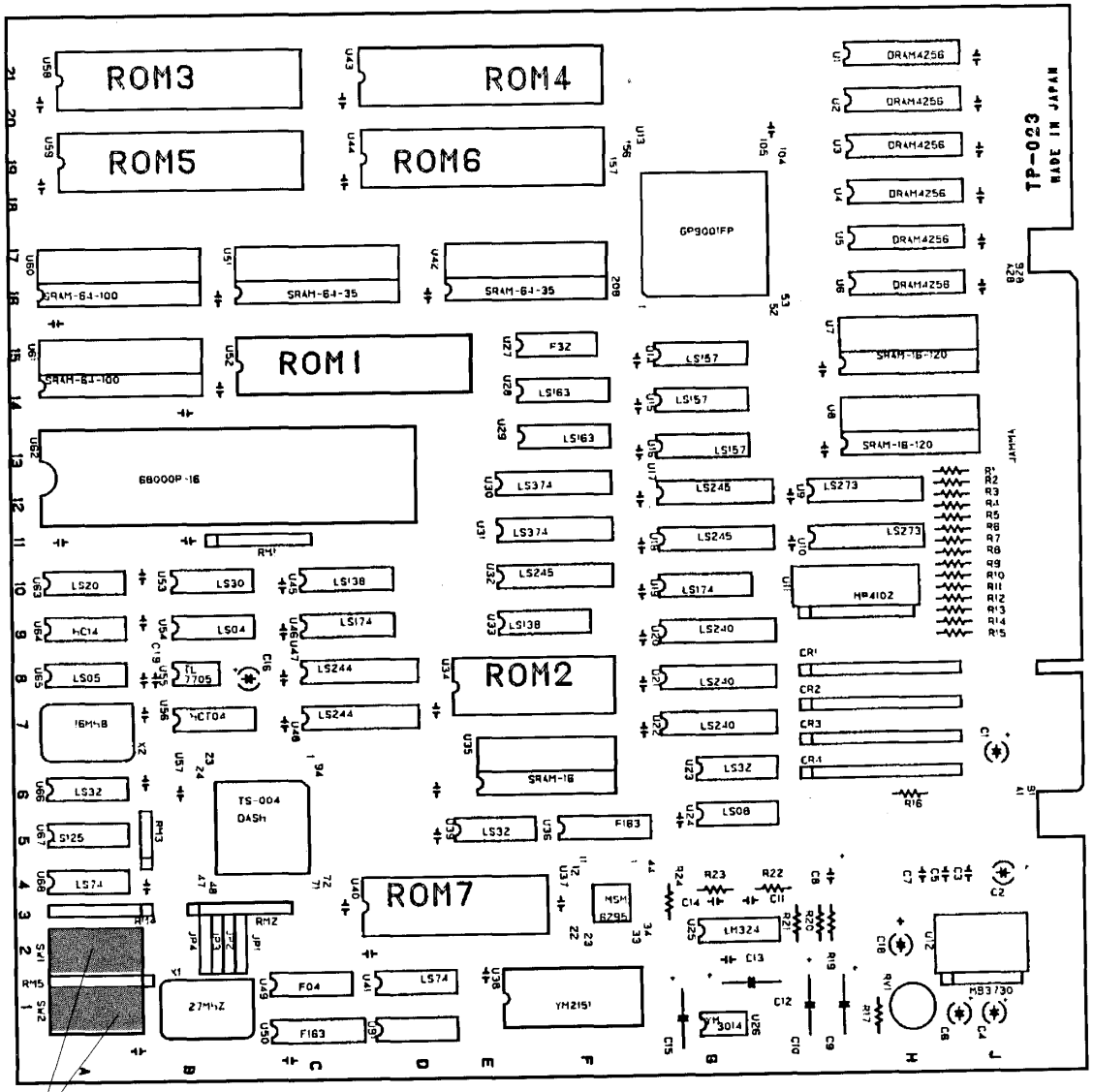

Are both DIP switch locations. Use for setting game and coin options.

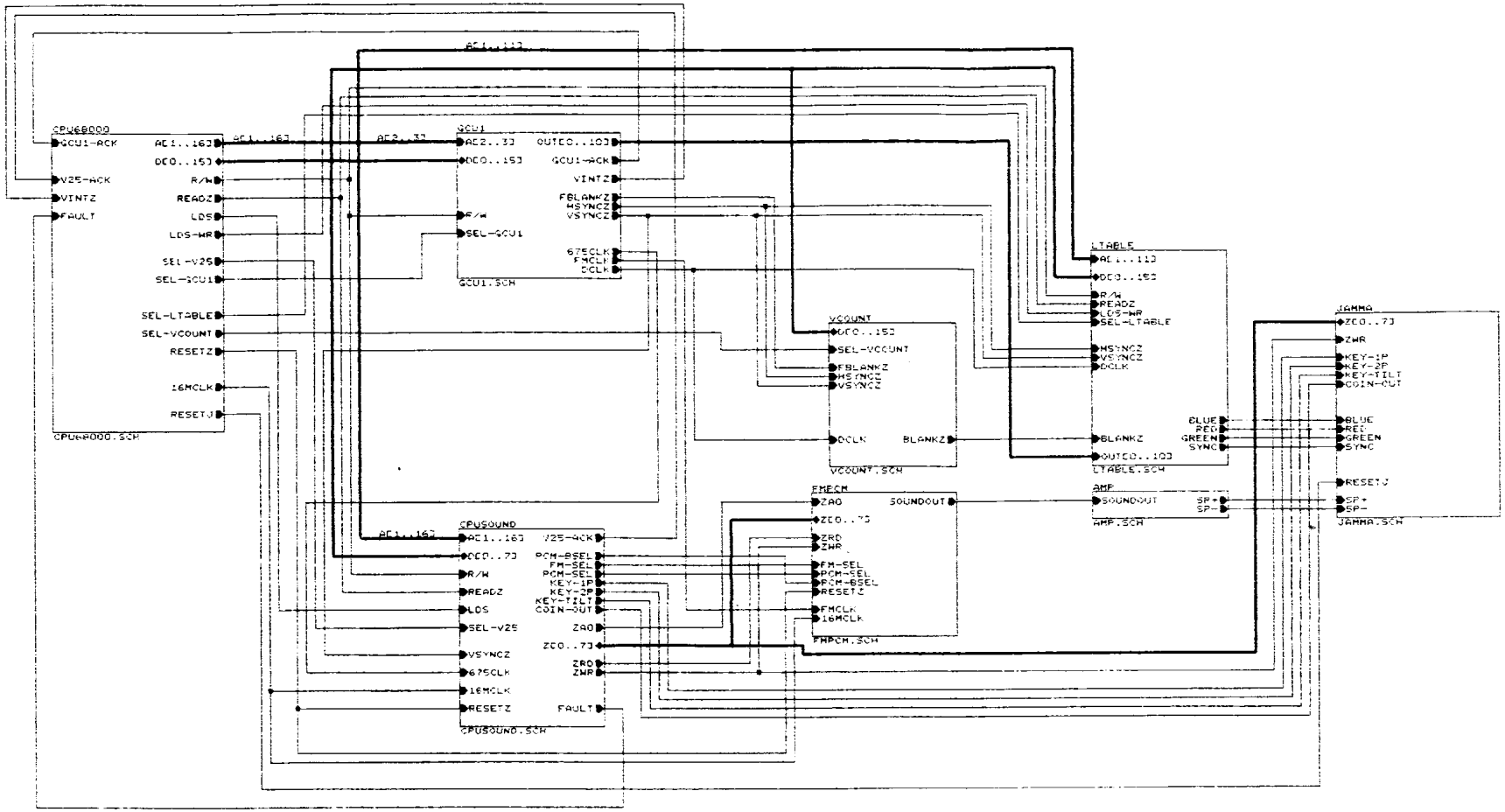
CPU68000
GCU1-ACK
V25-ACK
VINTZ
FAULT
AC1..16]
DC0..15]
R/W
READZ
LDS
LDS-WR
SEL-V25
SEL-GCU1
SEL-LTABLE
SEL-VCOUNT
RESETZ
16MCLK
RESETJ
CPU68000.SCH
AC1..11]
AC2..3]
GCU1
AC2..3]
DC0..15]
R/W
SEL-GCU1
OUTC0..10]
GCU1-ACK
VINTZ
FBLANKZ
HSYNCZ
VSYNCZ
675CLK
FMCLK
DCLK
GCU1.SCH
VCOUNT
DC0..15]
SEL-VCOUNT
FBLANKZ
HSYNCZ
VSYNCZ
DCLK
BLANKZ
VCOUNT.SCH
LTABLE
AC1..11]
DC0..15]
R/W
READZ
LDS-WR
SEL-LTABLE
HSYNCZ
VSYNCZ
DCLK
BLANKZ
OUTC0..10]
LTABLE.SCH
BLUE
RED
GREEN
SYNC
JAMMA
ZC0..7]
ZWR
KEY-1P
KEY-2P
KEY-TILT
COIN-OUT
BLUE
RED
GREEN
SYNC
RESETJ
SP+
SP-
JAMMA.SCH
AMP
SOUNDOUT
SP+
SP-
AMP.SCH
FMPCM
ZA0
ZC0..7]
ZRD
ZWR
FM-SEL
PCM-SEL
PCM-BSEL
RESETZ
FMCLK
16MCLK
SOUNDOUT
FMPCM.SCH
CPUSOUND
AC1..16]
DC0..7]
R/W
READZ
LDS
SEL-V25
VSYNCZ
675CLK
16MCLK
RESETZ
V25-ACK
PCM-BSEL
FM-SEL
PCM-SEL
KEY-1P
KEY-2P
KEY-TILT
COIN-OUT
ZA0
ZC0..7]
ZRD
ZWR
FAULT
CPUSOUND.SCH

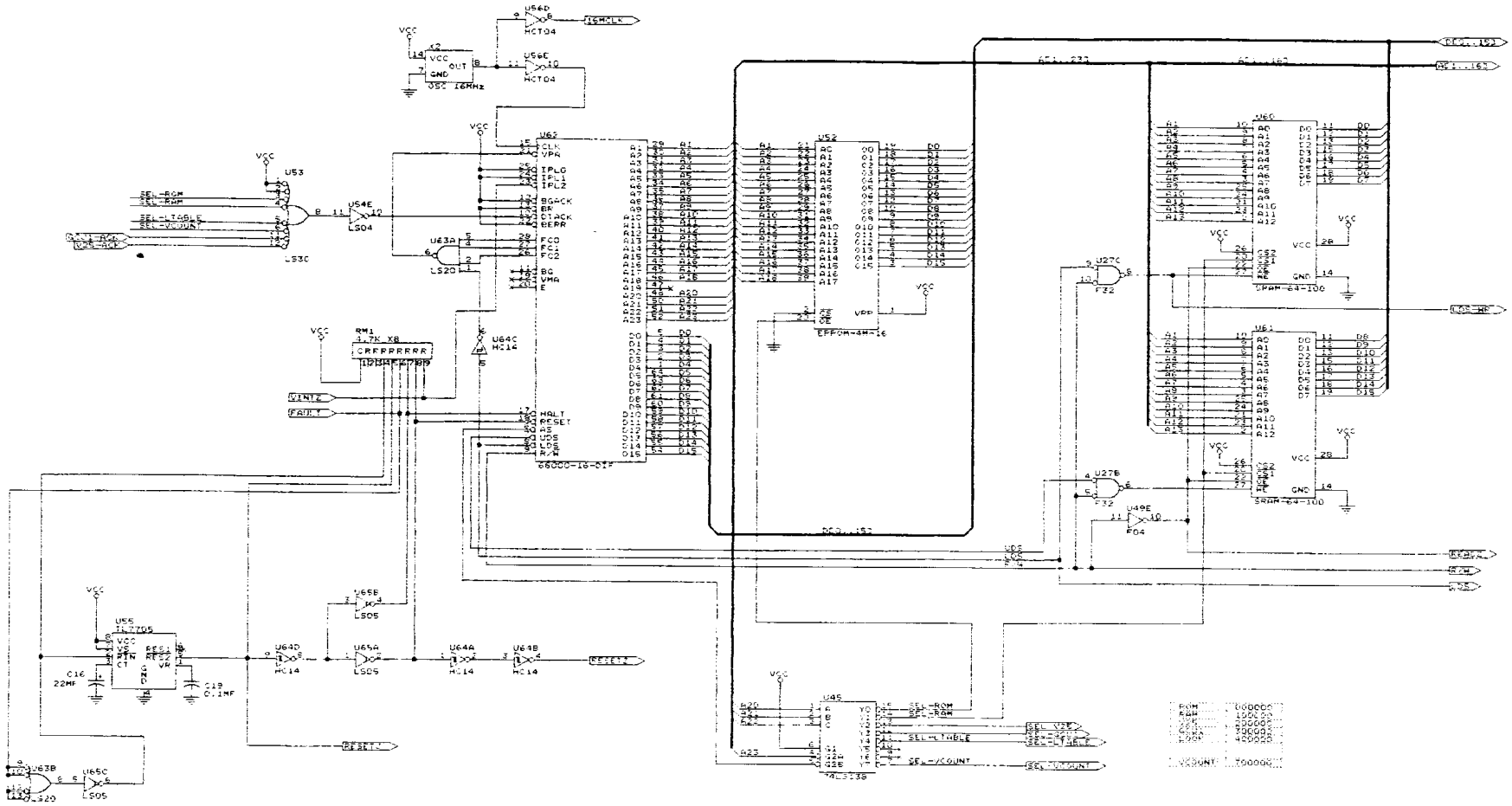
U56D
HCT04
U56E
HCT04
OSC 16MHz
U62
68000-16-DIP
U52
EPROM-4MB-16
U60
SRAM-64-100
U61
SRAM-64-100
U53
LS30
U54E
LS04
U63A
LS20
U64C
HC14
RM1
4.7K X8
U27C
F32
U27B
F32
U49E
F04
U55
IL7705
C16
22MF
C19
0.1MF
U64D
HC14
U65B
LS05
U65A
LS05
U64A
HC14
U64B
HC14
U63B
LS20
U65C
LS05
U45
74LS138
VINTZ
FAULT
RESETZ
RESET1
SEL-ROM
SEL-RAM
SEL-LTABLE
SEL-VCOUNT
ROM
RAM
LTABLE
VCOUNT

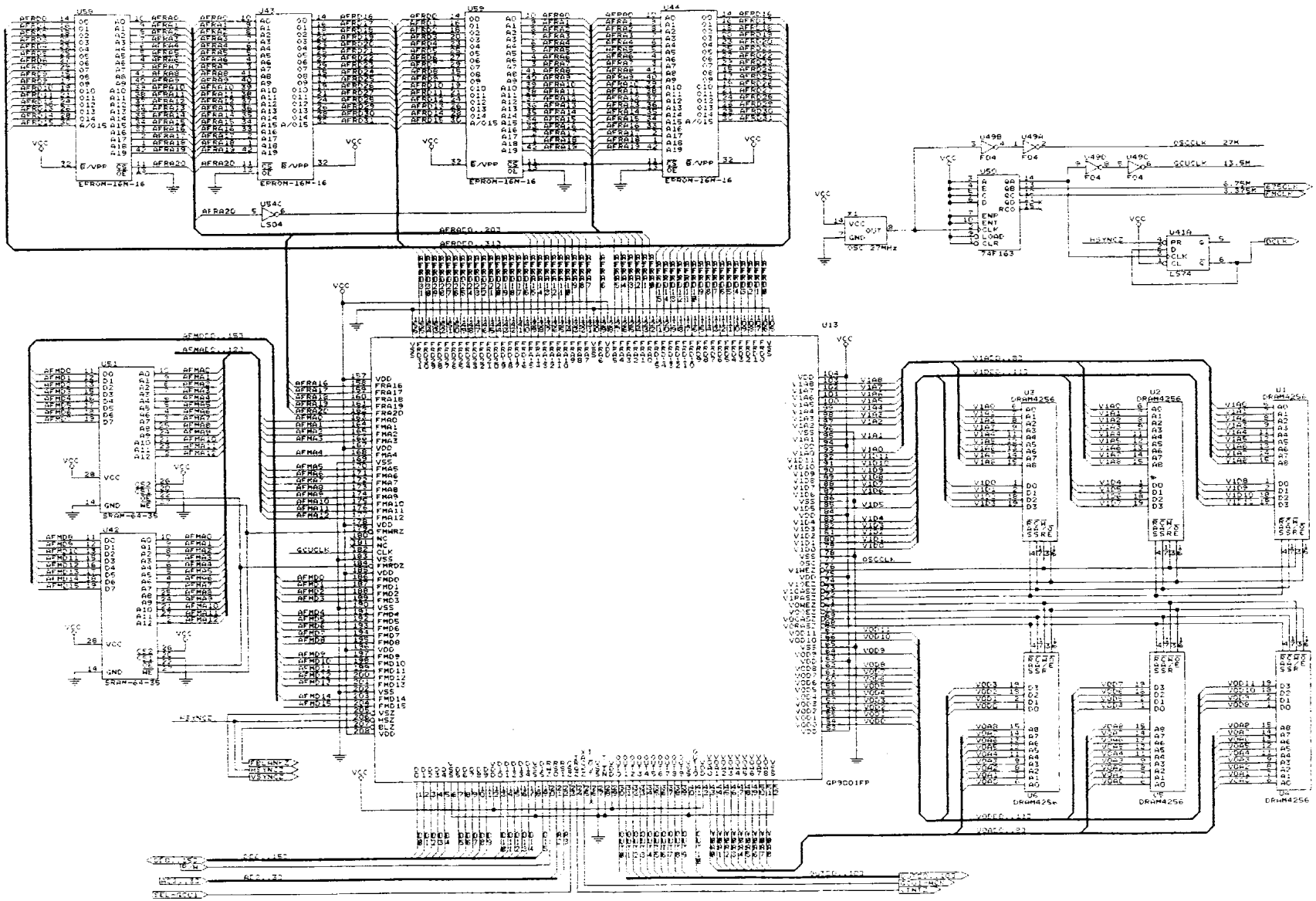
U59
U47
U59
U44
EPROM-16M-16
U54C
LS04
U13
GP9001FP
U50
74F163
U49B
U49H
U49C
U49G
F04
U41A
LS74
OSC 27MHz
U51
SRAM-64-35
U42
U3
U2
U1
U6
U5
U4
DRAM4256

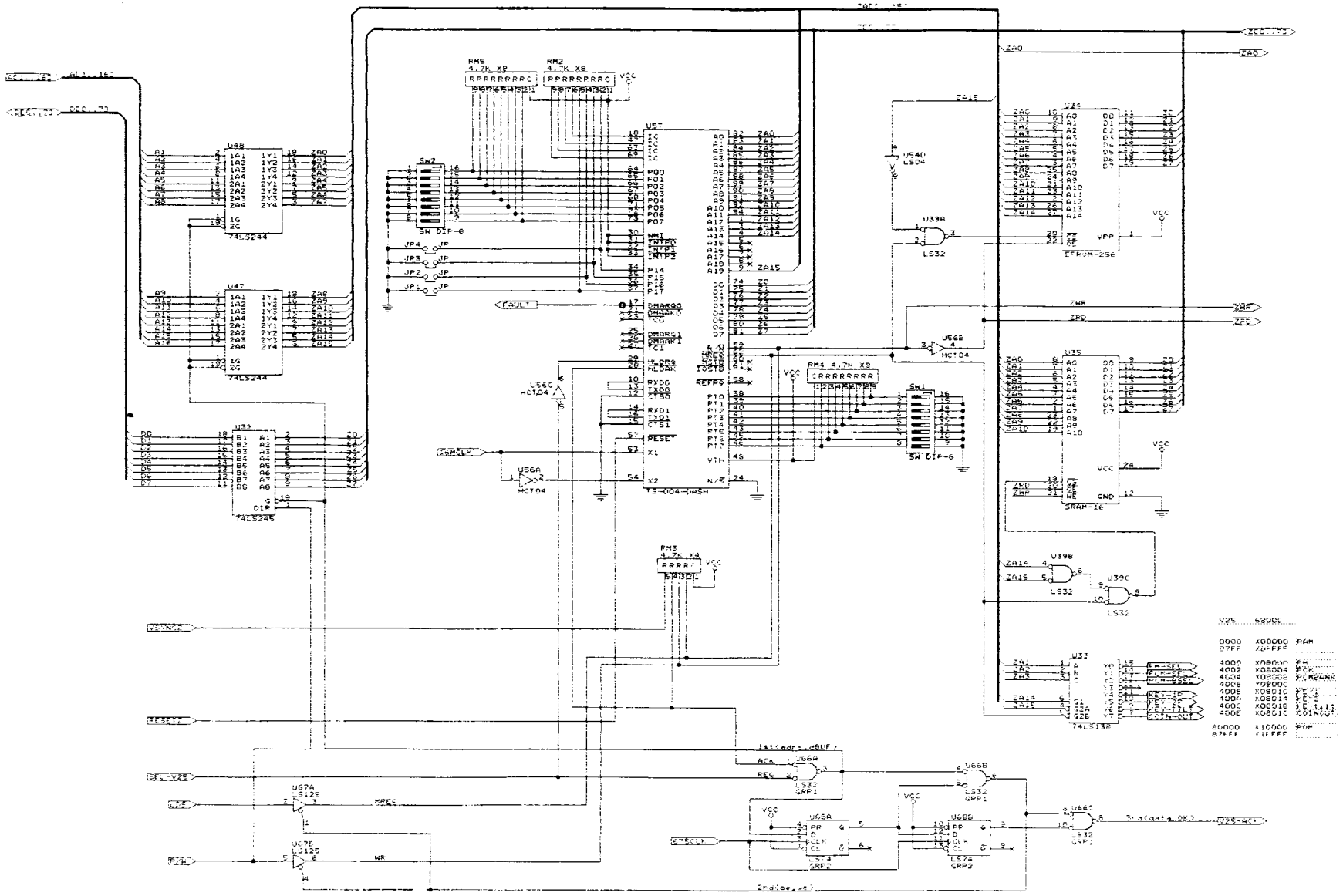
U48
74LS244
U47
74LS244
U32
74LS245
U57
TS-004-HASH
RM5 4.7K X8
RM2 4.7K X8
RM4 4.7K X8
RM3 4.7K X4
SW2
SW DIP-8
SW1
SW DIP-6
JP4
JP3
JP2
JP1
FAULT
U56C HCT04
U56A HCT04
U56B HCT04
U54D LS04
U39A LS32
U39B
U39C
LS32
U34
EEPROM-256
U35
SRAM-16
U33
74LS138
U67A LS125
U67B LS125
U66A LS32 GRP1
U66B LS32 GRP1
U66C LS32 GRP1
U68A LS74 GRP2
U68B LS74 GRP2
ZA0
ZA15
ZWR
ZRD
VCC
GND
MREQ
WR
RESET
X1
X2
V25 6800C
0000 X00000 RAM
07FF X07FFF
4000 X08000 KW
4002 X08004 KCK
4004 X08008 KXMBANK
4006 X0800C
4008 X08010 KTCL
4004 X08014 KEIS
400C X08018 KEtalis
400E X0801C COINCOUNT
8000 X10000 ROM
87FF X17FFF

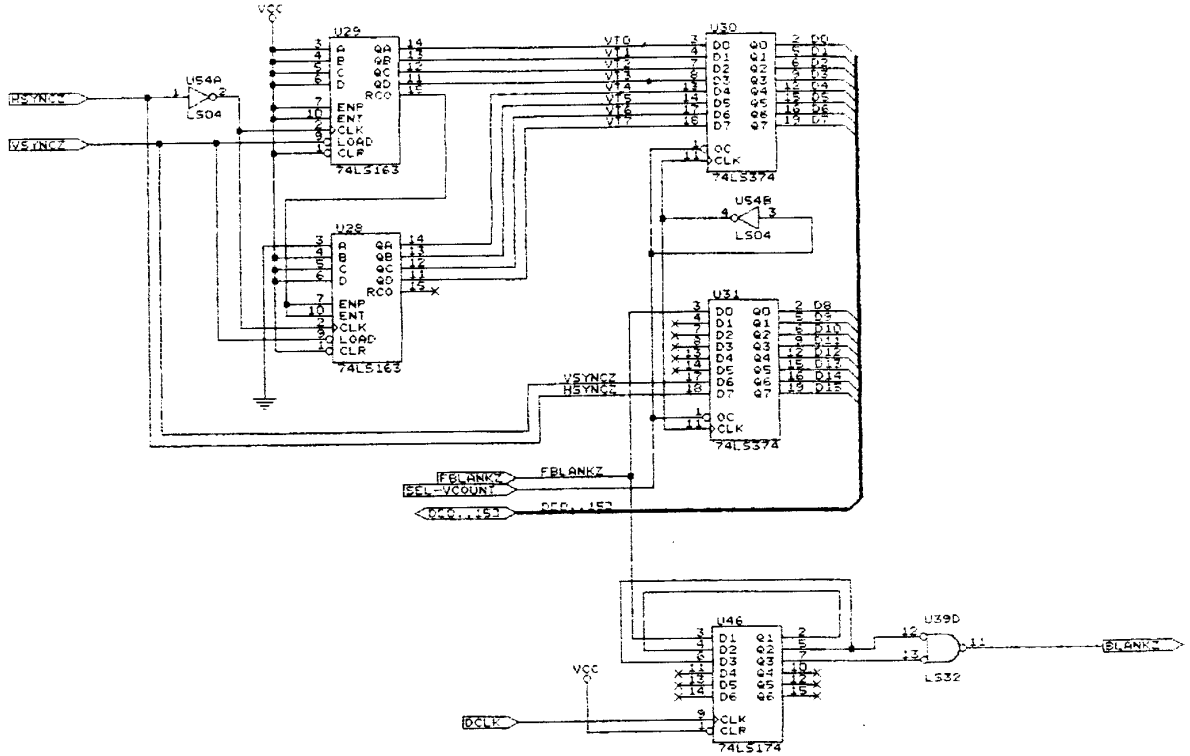
VCC
U29
74LS163
U28
74LS163
U30
74LS374
U31
74LS374
U46
74LS174
U54A
LS04
U54B
LS04
U39D
LS32
HSYNCZ
VSYNCZ
VTG
VSYNCZ
HSYNCZ
FBLANKZ
SEL-VCOUNT
DCLK
BLANKZ

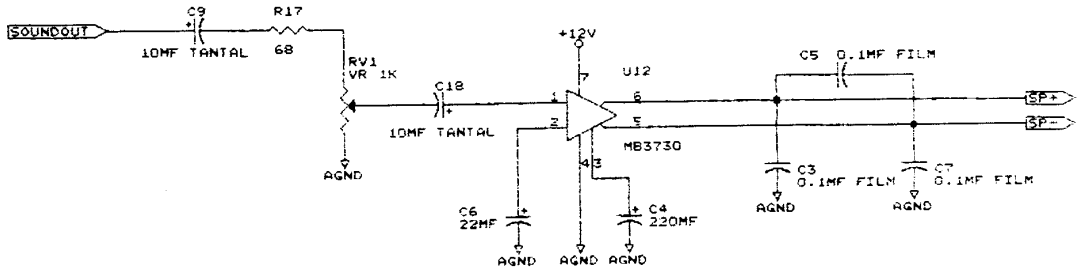
SOUNDOUT
C9
10MF TANTAL
R17
68
RV1
VR 1K
AGND
C18
10MF TANTAL
+12V
U12
MB3730
C5 0.1MF FILM
SP+
SP-
C3
0.1MF FILM
C7
0.1MF FILM
AGND
AGND
C6
22MF
AGND
AGND
C4
220MF
AGND

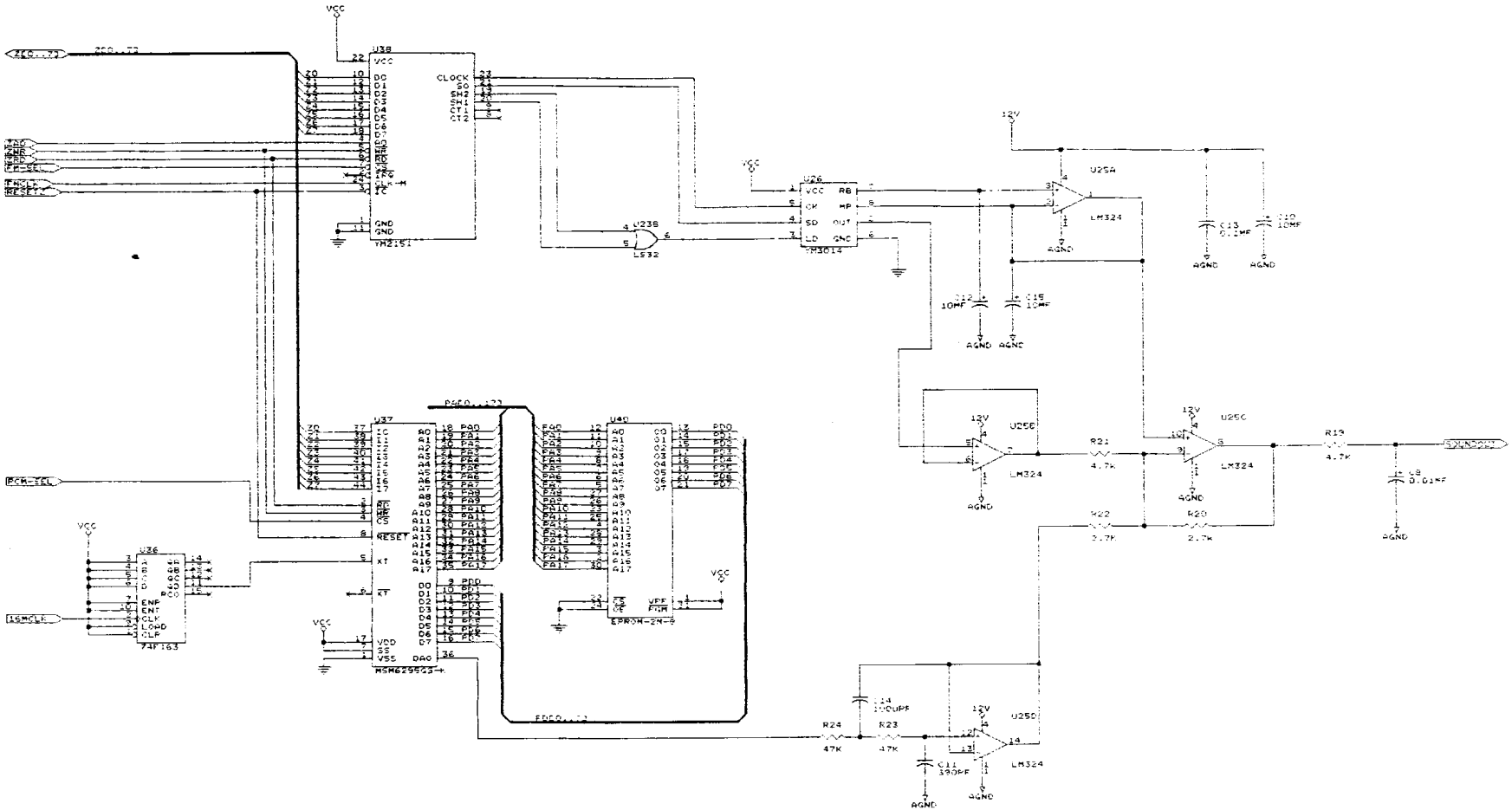
U38
TMS2151
U26
TM3614
U23B
LS32
U37
MSM6295GS
U40
EPROM-2M-9
U36
74F163
U25A
U25B
U25C
U25D
LM324
R21
4.7K
R22
3.7K
R20
2.7K
R19
4.7K
R24
47K
R23
47K
C11
390PF
C14
100UPF
C13
0.1MF
C10
10MF
C12
10MF
C15
10MF
C9
0.01MF
AGND
VCC
12V
PCM-SEL
16MCLK
SYNSOUT

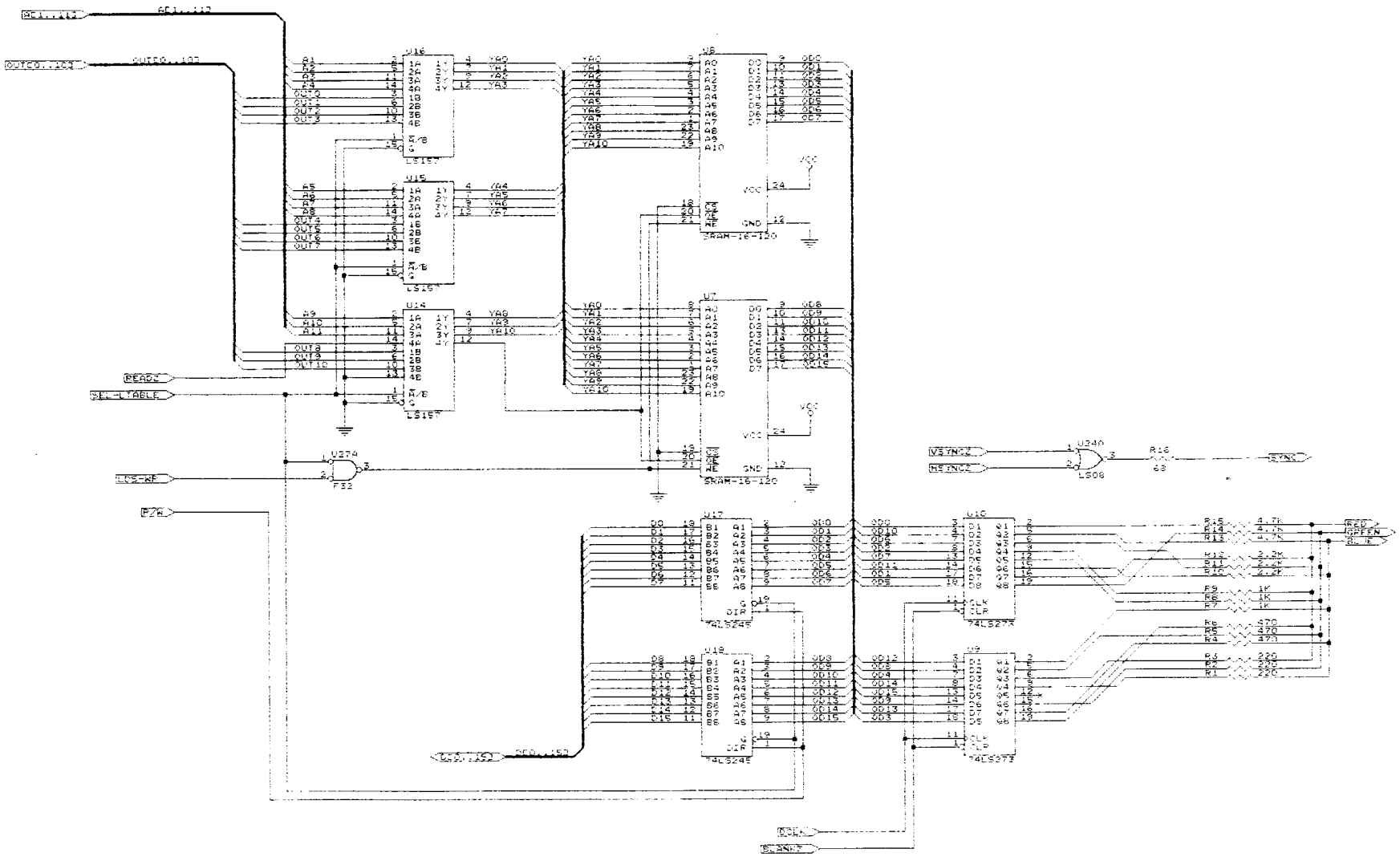
OUTC0..1C3
READ2
SEL-LTABLE
LDS-WR
P2H
U16
U15
U14
LS157
U8
U7
SRAM-16-120
U274
F32
U17
U18
74LS245
U10
U9
74LS273
U240
LS06
VSYNC2
HSYNC2
R16
68
SYNC
RED
OPEN
BLK
DCLK
BLANK

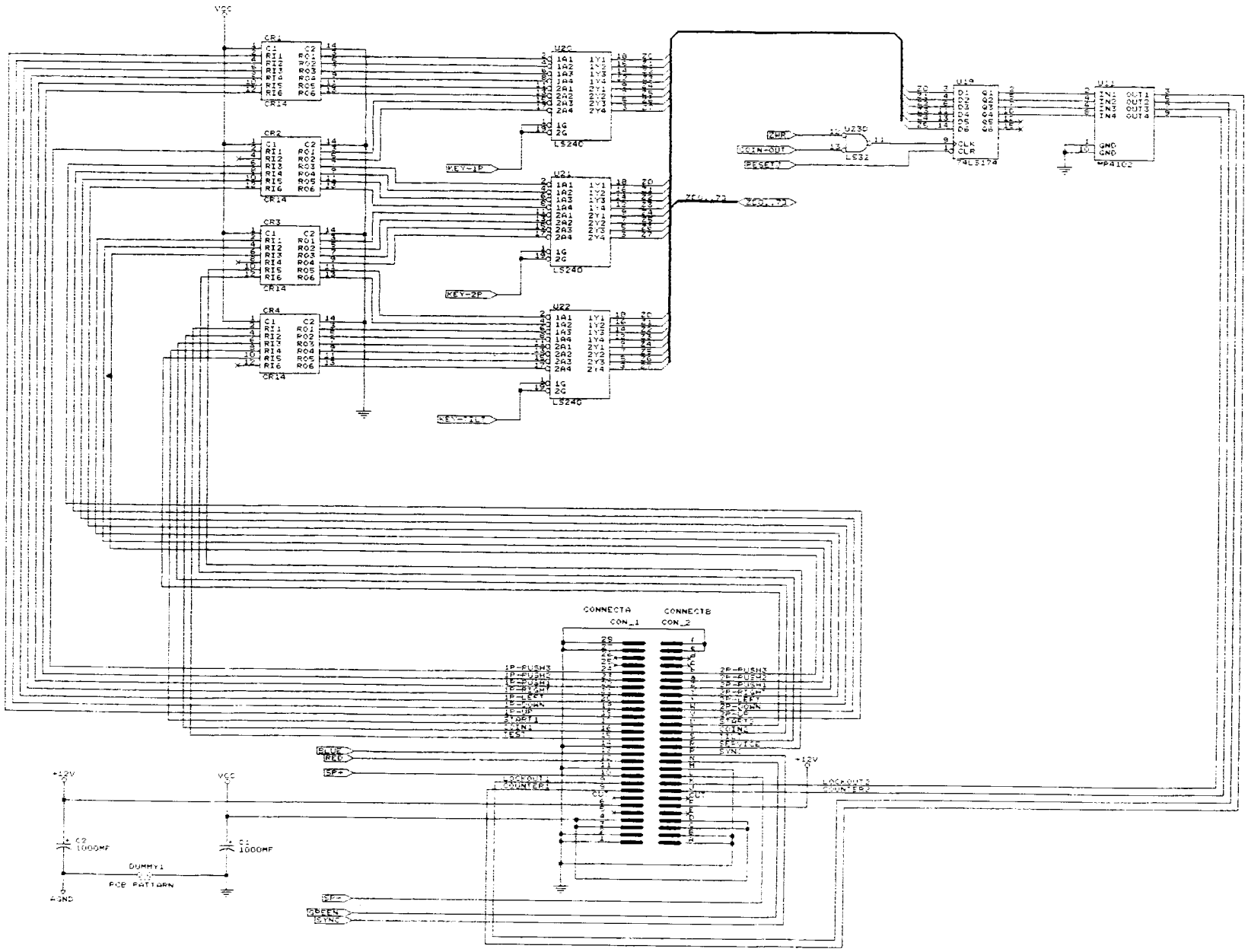
VCC
CR1
CR14
CR2
CR3
CR4
U20
U21
U22
LS240
KEY-1P
KEY-2P
KEY-ALL
U23D
LS32
WR
COIN-OUT
RESET1
U19
74LS174
U11
MP4102
CONNECTA
CONNECTB
CON_1
CON_2
1P-PUSH3
1P-PUSH2
1P-PUSH1
1P-RIGHT
1P-LEFT
1P-DOWN
1P-UP
START1
COIN1
TEST
2P-PUSH3
2P-PUSH2
2P-PUSH1
2P-RIGHT
2P-LEFT
2P-DOWN
2P-UP
START2
COIN2
SERVICE
BLUE
RED
SF+
LOCKOUT1
COUNTER1
LOCKOUT2
COUNTER2
+12V
C2
1000MF
C1
1000MF
DUMMY1
PCB PATTARN
AGND
GREEN
SYNC